State of Utah

GARY R. HERBERT
Governor

SPENCER J. COX
Lt. Governor

Department of Administrative Services
KIMBERLY K. HOOD
Executive Director

Division of Facilities Construction and Management
BRUCE WHITTINGTON
Interim Director

Addendum No. 2

Date:	August 3, 2015
To:	Commissioning Firms
From:	Matt Boyer – Project Manager, DFCM
Reference:	Unified State Laboratory – Module 2 Department of Public Safety Department of Health Department of Agriculture and Food DFCM Project No. 13020300
Subject:	**Addendum No. 2**

Pages	Addendum Cover Sheet	1	page
	Q/A	2	page
	Schematic Design Report	96	pages
	Total	99	pages

Note: This Addendum shall be included as part of the Contract Documents. Items in this Addendum apply to all drawings and specification sections whether referenced or not involving the portion of the work added, deleted, modified, or otherwise addressed in the Addendum. Acknowledge receipt of this Addendum in the space provided on the Bid Form. Failure to do so may subject the Bidder to Disqualification.

2.1 SCHEDULE: There are no project schedule changes.

2.2 GENERAL ITEMS:

2.2.1 Question/Answer Attached.

2.2.2 Schematic Design Report Attached.

2.2.3 Plans and Specifications posted.

Question and Answer August 3, 2015.

1. Will building envelope commissioning be a part of the project scope? No – Building envelope scope is separate from this solicitation.

2. Please confirm that this project is not seeking LEED certification. Correct – LEED certification will not be required on this project.

3. Can DFCM post copies of the mechanical, plumbing, and electrical basis of design documents (design narratives) for our review? See attached.

4. Has the Owners Project Requirements document been developed yet? If so, could you post a copy for review? Since this project did not follow LEED and the current HPBS was not implemented at the time a formal OPR was not developed.

5. The General Commissioning Requirements spec section, 019113, does not identify a sampling strategy for all acceptance testing activities. Has a minimum sampling size been established for Commissioning validation of Test and Balance airflow measurements for fume hoods, and other critical systems? No minimum sampling sizes have been established.

6. Have required performance and criteria for acceptance testing critical lab equipment and systems (airflow, =/-tolerances, temperatures, exhaust systems, pressurization differentials, etc. ?) been established? If so, can the document stating these criteria be posted for review? The performance criteria are documented in the project specifications and construction documents.

7. The SFC indicates that neither LEED standards nor DFCM's High Performance Building Standard apply to this project. If this is the case, does DFCM have alternative energy standards/performance targets for this project? The design was modeled using ASHRAE 90.1-2007 Appendix G guidelines to determine the most appropriate EEMs as they relate to owner value, first cost, programmatic requirements, and life cycle costs. A specific energy cost saving percentage goal was not required for this project.

8. How will the points listed below be distributed for the Commissioning Services Unified State Laboratory Module 2 project if we do not have sub-consultants on our team?

   Page 11 – Section 15 – B Strength of Team – **20 points Key Consultant Experience**
   Page 12 – Section 15 – C Project Management Approach – **20 points Sub-Consultant Management Plan**

   Sub consultant plans or lack thereof needs to be clarified in the agent's proposal so that the selection committee can see the value thereof. The points and the proposing agents approach will be considered / combined with their strength of team and project management approach

9. Can the Plans and Specifications be added?
   Plans and Specification, posted.

10. Can Big-D's Schedule be posted?
    The Lab is scheduled to be completed by October 2016.

11. Are you seeking commissioning on the functionality of specialized spaces such as the firearms range, laboratories, morgue, etc? And would you want them included in the proposal? For example, for the firearms range, would you want a specialist to evaluate all aspects of the firing range or is the RFP focused just on commissioning of the control, mechanical, electrical, elevators, and building management controls systems of the project?

    Page 3 states that "The services of this solicitation include, but are not limited to, commissioning of the control, mechanical, electrical, elevators, and building management controls systems of the project." And pages 5-6 state that special expertise will be required so I just want to make sure we are required to have personnel that specialize in these spaces? And that they are to be included in our submission?

    The project has a specialized lab planner on the team for the firearms range, lab and morgue. The planner will conduct standard site observations, as will the MEP engineers. They are not by definition commissioning these spaces. That said the items needing commissioning in these spaces are mechanical, electrical, plumbing and AV all of which would fall in normal Cx activities. The special MEP components of these spaces (which would be normal Cx activities) are: **Firearms Range** - HEPA filtered exhaust system, Custom built supply and return air plenums, Lighting. **Labs** - Phoenix valve control systems, Fume hoods, Vented biosafety cabinets, Snorkels, Lighting, Vented base cabinets and misc. vented cabinets. **Morgue** – Lighting, Air systems, Vented dissecting stations.

    The above are all items specified in the contract documents with known design parameters \ air requirements etc. There are other items that are supplier specific which we would specify the startup and training procedures but not the commissioning procedures such as: controlled temp rooms, ICU doors etc. The functionality of the specialized spaces, such as the firearms range, laboratories, morgue, etc... are part of the commissioning work to the extend of the work contained in the contract documents.

Unified State Laboratory Module 2

Schematic Design Approval Sheet

August 2013

We have reviewed the Unified State Laboratory Module 2 Schematic Design Submission and warrant that it adequately represents our request for a facility to fulfill our mission and programmatic needs. All appropriate parties representing DFCM have reviewed it for approval.

Jim Russell	DFCM Region Director	Date
Scott Whitney	Facilities Coordinator DFCM	Date
Kyle Stephens	Deputy Commissioner UDAF	Date
Dr. Weston Judd	Lab Director UDAF	Date
Jay Henry	Lab Director UBFS	Date
Dr. Todd Grey	Chief Medical Examiner. Dept. of Health	Date

CORE TEAM

The design team would like to thank the USL Module 2 Executive Committee and Working Team for their continued commitment and collaboration in progressing the project into the design phase. The members of these groups have invested their time and expertise in validating the program and assisting in the design process. We look forward to continued association and a successful completion of the project.

Executive Committee

Jim Russell	DFCM Region Director
Scott Whitney	DFCM Facilities Coordinator
Kyle Stephens	Deputy Commissioner UDAF
Dr. Weston Judd	Lab Director UDAF
Jay Henry	Lab Director UBFS
Scott McDaniels	UBFS
Pilar Shortsleeve	UBFS
Dr. Todd Grey	Chief Medical Examiner, Department of Health

COMPREHENSIVE LIST OF PARTICIPANTS

Designing this new facility required input from a broad range of individuals in addition to the members of the executive committee. Such involvement ranged from attending meetings to working with the design team one-on-one to describe and review specific space requirements. The following list includes those who made a critical contribution to the programming and conceptual design process.

Working Team

Rory Scott	DFCM
Matt Boyer	DFCM
Loren Casterline	DFCM
Robyn Atkinson	UDOH
Andy Pacejka	UBFS
Chad Grundy	UBFS
Stephen Ogilvie	UDAF
Mike Hepworth	UBFS
Michele Marfori	UBFS
Jennifer McNair	UBFS
Delia Tracey	UDAF
Steven Wright	UDAF
Mohammed Sharaf	UDAF
Ivette MacQueen	UDAF
Jeremiah Diehl	UDAF
Rebekah Kay	UBFS
Todd Van Buren	UBFS
Elisa Farmer	UBFS
Trent Grandy	UBFS
Michele Harward	UBFS
Bonnie Stewart	UBFS

Design Team

Kathy Wheadon	Senior Principal, CRSA
Mehrdad Samie, AIA	Senior Designer, CRSA
Jeff Nielsen	Senior Project Manager, CRSA
Russell McElroy, AIA	Senior Principal, MWL
Bonnie Carver, AIA	Principal, MWL
Don Leslie, ASLA	Landscape Architect, CRSA
Coury Morris, PE	Principal, Great Basin Engineering
Tait A. Ketcham, SE	Principal, Dunn Associates, Inc.
Don Bradshaw, PE	Principal, Van Boerum & Frank Associates, Inc.
David E. Wesemann, PE	President, Spectrum Engineers

TABLE OF CONTENTS

Approval Signatures
Acknowledgements
Table of Contents

SECTION 1
Executive Summary
Architectural Design Narrative
Sustainability Goals

SECTION 2
Presentation Drawings

SECTION 3
Basis of Design
Laboratory
Landscape
Civil
Structural
Mechanical
Electrical

SECTION 4
Code Summary

SECTION 5
Appendix
Equipment List
Schematic Design Drawings (Under separate cover)

SECTION 1 |

EXECUTIVE SUMMARY

The submittal represents the development of the Schematic Design Phase of the Utah Unified State Laboratories Module 2. The content is the culmination of a 9 week Schematic Design Phase in which the Design Team has worked closely with the Utah State Unified Laboratory Module 2 executive committee to craft the programmatic information into cohesive, definable floor plans, building forms and site design.

The major product of this phase is the development of working building plans that account for all of the programmed spaces, their adjacencies, sizes and configurations. The submittal is focused more on the development of an identifiable design direction than advancing the technical aspect of the project.

A useful evaluation of the submittal would begin from the exterior and continue to the interior. Consider the arrival to the building; how is it approached, and how does it fit aesthetically within the larger complex context? As a person moves through the building(s), does it welcome visitors and separate building occupants from visitors? Can a person easily find his or her way about the building to their destination? Has each room been placed in its proper adjacency; does the layout encourage collaboration?

It is anticipated that this document will be under review the week of August 25-29, 2013. Any and all comments on the submittal will be thoroughly evaluated by the design team and the executive committee. The resulting discussion and recommendations will continue to inform the design process as it moves into the Design Development Phase (DD).

The Design Development Phase will begin concurrently with the owner review period and is anticipated to last for 9 weeks concluding in October of 2013. In the DD phase the design will mature into a more formal and technical document. The design team and executive committee will begin discussing finish materials for the inside and outside of the building. The team will flush out details of the roofs, walls and windows. Technical specifications for specific processes, equipment and materials will be created. A comprehensive cost model will then be produced to validate the project and secure funding for the final design phase. At the conclusion of Design Development, the project will be reviewed again. The Construction Document phase will be the final design phase and will end in December 2013.

During the Construction Document Phase the design team will capture and conclude the documentation of all the technical aspects of the design necessary for it to be bid and built by a general contractor. Anticipated occupancy will be spring of 2015.

SECTION 1 |

ARCHITECTURAL DESIGN NARRATIVE

The Utah State Unified Laboratory Module 2 is composed of work on the Unified State Lab Complex at 4501 South 2700 West in Salt Lake City. The work is hereafter know as Module 2 The project as a whole will allow three major Departments to more efficiently serve its multiple missions by consolidating resources, bringing staff together to enhance collaborative opportunities and providing a state of the art, energy efficient and durable facility to house the necessary modern laboratory environment.

Work consists of crafting a facility to house administration office and laboratory facilities in one building adjacent to Module 1 of the State Unified Labs. Built in 2010, the 78,000-square-foot Module One facility houses the Department of Health's Bureaus of Microbiology, Forensic Toxicology, Chemical and Environmental Services, Laboratory Improvement, and Microbiology. Crafting a facility that both complements Module 1 and is a good neighbor in a growing complex, which one day may consist of three large laboratory buildings, is incumbent upon this project. This new facility will provide a state-of-the-art laboratory for the State of Utah that will allow officials to not only respond to the public health, scientific and public safety needs of a growing population, but also work in support of and in conjunction with regional and national agencies.

The building will serve the Department of Agriculture and Food, Department of Health Office of the Medical Examiner, Department of Public Safety Crime Lab. Each programmatic area has unique space requirements and is thus allow separation to ensure the security of workflow and for staff. The facility connects three floors and is approximately 300 feet long, the massing and layout convey a form that is within the scale of nearby campus buildings. The length of the building is minimized by a change in volume from three stories to two as it steps back at the upper level. In addition, programmatic function is read through fenestration unique to each programmatic area, with large north facing expanses of glazing in the administrative office areas and more discrete window openings into laboratories, sensitive work area, and support spaces. The building houses two primary internal circulation cores, one to the west – primarily for public circulation, and one to the east for service personnel. Each of these entry points allows access to an internal floor lobby, beyond which lies secure staff work areas.

The specific services offered by each of the agencies includes:

Public Safety Crime Laboratory
- Forensic Chemistry (controlled substance analysis, clandestine drug laboratory analysis)
- Forensic Biology (stain identification, DNA and CODIS data basing)
- Impression Evidence (latent prints, shoe and tire and AFIS data basing)
- Crime Scene Investigation and Reconstruction
- Firearms and Tool Marks (ballistics, shooting scene reconstruction, serial number restoration)
- Trace Evidence (video/audio analysis, hair/fiber testing, paint, glass and fire debris analysis)

Department of Health Office of the Medical Examiner
- Autopsy Suite
- Morgue Operations (including refrigerated and frozen tissue storage)
- Morgue Clerk Quarters and Birthing
- Tissue Harvesting and Storage
- Histology Laboratory

• Photographic Workroom and Storage
• Evidence Workroom and Storage
• Radiology/X-ray Laboratory

Department of Agriculture and Food Laboratories
• Agricultural Chemistry (e.g., pesticide residue, feed & fertilizer analysis)
• Dairy Product Testing
• Environmental Monitoring
• Food-Related Terrorism Testing

The site is organized with public access to the building off of an expanded existing parking area, which currently serves Module 1, at the west end of Module 2. A joint use public plaza between the buildings allows for ease of access, easily defined entry and a landscape plan which is both clear and human scaled. Service delivery and secure load in-out is located at the east end of Module 2 in a fenced service yard. Short term parking, to serve delivery vehicles, as well as circulation access to and through the OME Sally Port have been designed. Beyond this initial area is a more secure area to be used for secure department vehicle parking, and evidence vehicle access to the Crime Lab garages.

Planning Ideas
Planning to place 89,000 square feet of new construction on adjacent to Module 1 is a significant task not just in accommodating the program, but also in establishing a design approach that fits on the site and responds to long term planning goals. In molding the project into a building form, the design team was guided by the planning ideas described in the program document. The programmatic planning ideas include:

- Site the building to ease public way finding and access to the primary entry.
- Utilize the main level for OME and Crime Scene activities which require the movement of large and at times smelly objects.
- Plan for the control of odors between the OME and other building occupants.
- Arrange departments in way that facilitates synergy among functions.
- Maximize administrative office to allow for focused work and collaboration.
- Locate service points and gather most needed functions into intuitive functions.
- Eliminate barriers (real and perceived) to disabled persons.
- Enhance users connection to outdoor spaces even when weather discourages being out of doors.

ORGANIZATIONAL METHODOLOGY

Campus Organization
The project team spent time in the early phase of the project to understand previously crafted planning tools and Module 2 Program. The design team explored with the client the pros and cons of the original siting of Module 2, to the northeast of Module 1. While a seemingly valuable site due to opportunities for flow of samples to Modules, potential for shared back of house access and delivery zone, and mechanical connectivity to Module 1 it was felt after thorough consideration that building siting would limit visual access to the building from 2700 West, hindering public access to the building, compromising Module 1 staff compelled to assist with wayfinding, and poor separation of public and private access to the building.

Building Organization & Form
The building is organized on each floor with administrative office spaces to the north of a main circulation hall and active laboratory space to the south of the main hall. A dog leg on levels one and two allow for separation of Public Safety Firearms and Crime Scene Investigation garage bays. In addition, the dog leg allows for centralized receiving and joint stores to be located adjacent to the east entry.

Connectivity
Promoting a sense of community for the campus is a key element of the site planning objectives. Additionally, creating an equal sense of community on the interior, and providing for multiple levels of connectivity is an important design objective. By centrally locating common areas such as the break rooms, conferencing areas and 'huddle' spaces, users are more likely to run into their counterparts, stop and talk and exchange ideas and experiences. At the ground level, the meeting spaces, and joint break room facility all face the shared courtyard. This will foster a sense of connectivity in the future between building occupants. Vertical connectivity is also important. The design provides for spacious and well lit stairs that promotes their use. A high volume space at the main lobby provides visual connectivity between the floors and gives each of the departments a visibility from the 'front door.'

Exterior Material Pallete
The material palette is conceived to support the quality and identity appropriate for a State facility of this stature and to address the need for durable and low maintenance materials long term. Not only is it critical to invest up front on materials that are durable and aesthetically appropriate, it is paramount that the exterior materials provide the State with a low to no maintenance exterior skin to prevent the need for replacement and repair to reduce operational costs.

The exterior material palette is designed to be simple but also elegant and reflective of the mission of the three Departments in creating an 'excellent workplace.' The palette is comprised of three basic materials:

1. Integral color ground-faced CMU
2. Exterior metal panel system
3. Insulated high performance glazing w/ aluminum storefront and curtainwall systems

In addition to this basic palette, the design includes important aluminum and steel shading elements that will preserve goals of daylighting and views while providing adequate protection from the sun. These shading elements are critical to reducing overall HVAC loading on the mechanical systems and will reduce energy consumption and operational costs over the life of the building.

SUSTAINABILITY GOALS

Essential to having a successful and integrated sustainable design are: full team involvement in goal setting, a group committed to the goals set, following the goals throughout the design and construction process, and ensuring proper building operations. Starting early and being consistent with the goals will help lower construction costs and allow for responsible allocation of first costs for energy efficiency and lower maintenance/operation costs.

The following table lists specific goals that the Design Team identified as desirable and appropriate for the project. The goals will be integrated into the Owners Project Requirements (OPR) and Basis of Design (BOD). The BOD and OPR will become living documents that will mature through the duration of design and be a guide for the project team. The Table, OPR and BOD documents will be included in the construction drawings so that owner and A/E will have a clear understanding of the project goals through the end of construction and turn over.
General sustainability issues and concerns:

The Unified Lab Module 2 will be built to meet the DFCM High Performance Building Rating System and other items listed here in accordance with DFCM Energy Program Directors requests to every extent possible. The main goals will be as follows:

The project will pursue LEED Silver certification. This goal may be difficult due to plug load and air change requirements making LEED energy goals and prerequisites prohibitive. If LEED requirements cannot be met, the project will still pursue energy savings in any possible measures.

- The project will specifically pursue the following credits as required by DFCM:
    - WE 1.1: Water Efficient Landscaping: Reduce by 50%
    - EA 3: Enhanced Commissioning
    - EQ 3.1: Construction IAQ Management Plan: During Construction
    - EQ 4.1: Low-Emitting Materials: Adhesives and Sealants
    - EQ 4.2: Low-Emitting Materials: Paint and Coatings

- The project has identified the following goals/concepts to pursue:
    - Project to include envelope testing and design assistance from an envelope specialist. This specialist will also be consulted to avoid room to room contamination. In coordination with the envelope consultant, the project will require mock ups for window and exterior wall conditions to be tested for air and water infiltration. These tests to be conducted again throughout construction and a blower door test at construction completion to confirm building air tightness.
    - Experienced EUI on buildings of this nature vary greatly. EUI of Mod 1 have been requested to use as a benchmark,
    - Lighting Power Density targets,
    - Lowered air change rate goals along with setback options and controls to meet occupant use requirements while lessening building energy use. For instance, the

Decomposition Autopsy room may be able to be set back to 15-20 similar to the autopsy room when higher change rates are not required,

- Aircuity system which uses air sampling to set ventilation rates is being reviewed as a potential method of energy savings,
- The project will model the building to analyze and make selections based on life-cycle cost,
- Building modeling and integration has begun in SDs to continue through the design process to give early guidance in tandem with building design,
- Building metering in coordination with DFCM management. Team is reviewing options of Sky Spark or similar building analytics system to help DFCM with building monitoring and control.

Please see the following LEED checklist showing initial target credits to achieve LEED Silver.

Unified Lab Module 2 - LEED-NC 3.0 Project Checklist Template

Sustainable Sites

		Possible Points	0-40% = 0 41-60% = 1 66-100%= 1	Responsible Party	Project Notes
C	prereq. 1 **Construction Activity Pollution Prevention (0 points possible)** Have a plan appropriate to the site based on the 2003 EPA Construction General Permit.	req'd		**Civil/Contractor**	Civil to provide plan, contractor to execute and monitor.
C	credit 1 **Site Selection (1 point possible)** Do not build on prime farmland, floodplain, threatened species' habitat, near wetlands or on public parklands	1	80%	**CRSA**	Mapping confirmed no issue site designations- site is considered to have prime soils, however given adjacent property no farming opportunities exist.
C	credit 2 **Development Density & Community Connectivity (5 points possible)** Channel development to urban areas with existing infrastructures, protecting greenfields and preserving habitat and natural resources.	0	0%	CRSA	Credit not met. Area does not meet density requirements. No services within 1/2 mile.
C	credit 3 **Brownfield Redevelopment (1 point possible)** Rehabilitate damaged sites where development is complicated by real or perceived environmental contamination, reducing pressure on undeveloped land. *Can get possible EPA listing for asbestos.*	0	0%	CRSA	Not available with this site.
	credit 4 **Alternative Transportation (1-12 points possible)**				
C	4.1. Public transportation access (existing, OR planned & funded) (6 points) light rail within a 1/2 mile, 2 bus lines within 1/4 mile	0	0%	CRSA	Only one bus line within 1/4 mile
C	**4.2.** Bicycle Storage & Changing Rooms (1 point) **Commercial:** This requires secure bike spaces and/or storage for 5% of peak building users. **AND** shower and changing facilities for 0.5% of FTE **Residential:** Provide covered storage for securing bicycles for 15% or more of building occupants	1	75%	**CRSA**	Requires a shower/changing facility and bike racks- # to be determined with building occupancy FTE.
C	**4.3.** Low-emitting & Fuel efficient vehicles (3 points) **option a:** Provide preferred parking for low-emitting and fuel-efficient vehicles for 5% of the total parking capacity. Providing a discounted rate is an acceptable substitute for preferred parking. **option c:** Provide low-emitting and fuel efficient vehicles for 3% of FTE and provide preferred parking for these vehicles	3	75%	**CRSA**	Approx 66 new spots added- 4 spots would need to be reserved for low-emitting vehicles
C	**4.4.** Parking Capacity (2 points) **option a (non-residential):** don't exceed min. zoning reqmts; **AND** preferred parking for 5% of total parking spaces **option b (non-residential):** if parking provided for <5% FTE occupants, preferred parking for 5% of total parking spaces **option c (residential):** don't exceed min. zoning reqmts; **AND** provide infrastructure/programs for ridesharing option d (mixed use): <10% commercial area must adhere to residential requirements. >10% commercial area, the commercial portion must adhere to non-residential requirements and the residential portion must adhere to the residential requirements **option e (all):** no new parking	2	75%	**CRSA**	Approx 66 new spots added- 4 spots would need to be reserved for carpooling vehicles. Zoning parking rqmt. to be confirmed
	credit 5 **Site Development (1-2 points possible)**				
C	5.1 Protect or Restore Habitat **option b (prev. developed sites):** Restore 50% of the site (excluding building footprint) or 20% of the total site (including building footprint), whichever is greater, by planting native or adapted vegetation. *(including green roofs, if SS 2.0 is achieved)*	1	60%	**CRSA Site**	To be reviewed- may be possible given the vegetated space available.
C	5.2 Maximize Open Space **option a:** reduce development footprint to exceed local zoning open space reqmt for site by 25% **option b:** if there is no zoning reqmt, provide vegetated open space area equal to the building footprint. **option c:** where zoning has no open space requirement, provide vegetated open space equal to 20% of the project's site area.	1	60%	**CRSA Site**	To be reveiwed in light of future building 3 location.
	credit 6 **Storm Water Design (1-2 points possible)**				
C	6.1 Quantity Control (if existing imperviousness is less than or equal to 50%). **option a:** stormwater management plan that prevents the post-development peak discharge rate & quantity from exceeding the pre-development peak discharge rate & quantity (for one and two-year 24hr design storms) **option b:** stormwater management plan that protects receiving stream channels from excessive erosion by implementing stream channel protection strategy & quality control measures	1	75%	**Civil**	
C	6.2 Quality Control Implement a stormwater management plan that reduces impervious cover, promotes infiltration & captures & treats runoff from 90% of the average annual rainfall using BMPs. (remove 80% of TSS loads)	1	75%	**Civil**	

© 2010, CRSA. All rights reserved. No claim to copyright is made for original U.S. Government works.

CRSA

Unified Lab Module 2 - LEED-NC 3.0 Project Checklist Template

C	credit 7 **Heat Island Effect** (1-2 points possible) **7.1** Non-Roof. **option a:** 50% of non-roof impervious surfaces shall be shaded by tree canopy, open-grid, light-colored paving (SRI ≥29), or shade provided by structures covered in solar panels. **option b:** 50% of parking shall be underground, under deck, under roof, or under a building. Any roof to cover parking must have SRI ≥29 or covered by solar panels that produce energy to offset some non-renewable resource use.	1	60%	**CRSA Site**	Would require some of the parking and/or dirve areas to be concrete. Has a direct cost impact.
C	**7.2** Roof **option a:** 75% of roof surface must meet the following SRI requirements low-sloped roof (slope ≤2:12), SRI ≥78 steep-sloped roof (slope >2:12), SRI ≥29 **option b:** 50% of roof shall be vegetated **option c:** combine the above two options to meet the following formula for area (SRI area/0.75) + (vegetated area/0.5) ≥ total roof area	1	75%	**CRSA**	
C	credit 8 **Light Pollution Reduction** (1 point possible) **Interior Lighting** **option a:** reduce input power by 50% by automatic devices between the hours of 11 pm and 5 am. Override may be provided as long as it lasts no longer than 30 minutes **option b:** all openings in the envelope with a direct line of site to any non-emergency luminaires must have shielding for a transmittance of less than 10% between the hours of 11pm and 5am **Exterior Lighting** Classify project site into RP-33 zones to determine requirements. LZ1. Dark (Park and Rural Settings) LZ2. Low (Residential areas) LZ3. Medium (Commercial/Industrial, High-density Residential) LZ4. High (Major City Centers, Entertainment Districts) Do not exceed 80% of the lighting power densities for exterior areas and 50% for building facades & landscape features as defined in ASHRAE/IESNA Standard 90.1-2004.	1	75%	**Electrical**	This point depends largely on the site boundary in relation to site surfaces that need to be illuminated for safety (parking lots, walkways). Given our site, we can likely coord the lighting with the LEED boundary- to review as a team

Water Efficiency

		Possible Points		Responsible Party	
C	prereq 1 **Water Use Reduction (required)** Employ strategies that in aggregate use 20% less water than the water use baseline calculated for the building (not including irrigation) **Commercial:** toilet 1.6 gpf, urinal 1.0 gpf, restroom faucet private 2.2 gpm, restroom faucet non private .5 gpm, restroom faucet metering .25 gpm, prerinse spray valves <1.6 gpm **Residential**: toilets 1.6 gpf, bathroom faucet 2.2 gpm, kitchen faucet 2.2 gpm, showerheads 2.5 gpm	req'd		Mechanical	Low flow fixtures.
C	credit 1 **Water Efficient Landscaping** (2-4 points possible) **option a:** Reduce by 50% Reduce potable water consumption for irrigation by 50% from a calculated mid-summer baseline case using plant species, irrigation technology, captured/recycled water, publicly supplied non-potable water.	2	75%	**CRSA Site**	
C	credit 2 **Innovative Wastewater Technologies** (2 points possible) **option a:** Reduce potable water use for sewage conveyance by 50% with water-conserving fixtures or non-potable water **option b:** Treat 50% of wastewater on-site to tertiary standards to remain on-site	0	0%	Civil	
C	credit 3 **Water Use Reduction** (2-4 points possible) Employ strategies that in aggregate use less water than the water use baseline calculated for the building (not including irrigation) % as follows: 30% reduction - 2 points 35% reduction - 3 points 40% reduction - 4 points	2	75%	**Mechanical**	

© 2010, CRSA. All rights reserved. No claim to copyright is made for original U.S. Government works.

CRSA

Unified Lab Module 2 - LEED-NC 3.0 Project Checklist Template

Energy & Atmosphere

		Possible Points		Responsible Party	
C	prereq 1 **Fundamental Building Systems Commissioning** Commissioning Authority (CxA) shall have documented commissioning authority experience in at least two building projects. CxA shall report findings and recommendations directly to the Owner. *If project <50,000sf, CxA may include qualified persons on the design/construction teams who have the required experience.*	req'd	90%	**Authority**	
C	prereq 2 **Minimum Energy Performance** Comply with both mandatory AND prescriptive requirements of performance ASHRAE/IESNA 90.1-2004 (without amendments). (Sections 5.4, 6.4, 7.4, 8.4, 9.4, 10.4 AND 5.5, 6.5, 7.5, 9.5) *(allows use of performance requirements in section 11 in lieu of prescriptive)*	req'd	60%	**Mechanical**	Meeting the prereq can be difficult due to air exchanges and plug loads. May make LEED Certification difficult.
C	prereq 3 **Fundamental Refrigerant Management** Zero use of CFC refrigerants in new buildings & CFC phase-out conversion in existing.	req'd	90%	**Mechanical**	
C	credit 1 **Optimize Energy Performance** (1-19 points possible) **option a:** Whole Building Energy Simulation Use the Building Performance Rating Method in Appendix G of 90.1-2004. New Buildings, 12% - 48% reduction. (1 point per 2% increment up to 19) Existing Buildings 8% - 44% reduction. (1 point per 2% increment up to) **option b:** Prescriptive Compliance Path (1 point) For office occupancy buildings <20,000sf. comply with ASHRAE Advanced Energy Design Guide for Small Office Buildings 2004. **option c:** Prescriptive Compliance Path (1-3 points) Comply with Basic Criteria & Prescriptive Measures of the Advanced Buildings Benchmark™ Version 1.1 (not incl 1.7, 1.11, 1.14)	8	60%	**Mechanical**	May look at adjusted baseline for evaluating building
C	credit 2 **On-Site Renewable Energy** (1-7 points) Encourage and recognize increasing levels of self-supply through renewable technologies to reduce environmental impacts associated with fossil fuel energy use. 1% - 13% (1 point per 2% increment)	0	30%	**Electrical**	To review in light of cost. Currently not in design scope. Verify if in budget.
C	credit 3 **Enhanced Commissioning** (2 points possible) CxA for this credit may not be an employee or contracted through contractor.	2	75%	**Authority**	
C	credit 4 **Enhanced Refrigerant Management** (2 points possible) **option a:** do not use refrigerants **option b:** calculate a building weighted average for Ozone Depletion Potential and Global Warming Potential where LCGWP + LCODP x 10^5 ≤ 100 AND use fire suppression systems that do not contain CFCs, HCFCs or Halons	2	75%	**Mechanical**	
C	credit 5 **Measurement and Verification** (3 points possible) Provide for the ongoing accountability of building energy consumption over time. Implement a M&V plan to cover at least one year post-construction. IPMVP	7	50%	**Mechanical**	Confirm wishes and intent with client group & DFCM. Not anticipated to meter to the level required by LEED.
C	credit 6 **Green Power** (2 points possible) Encourage the development and use of grid-source energy technologies on a net zero pollution basis, 35% of the building's "regulated" electricity for **two years**. Use EA 1.0 model OR DOE Commercial Building Energy Consumption Survey (CBECS) database to determine estimated use. Meet the Center for Resource Solutions certification requirements. Utah Power's Blue Sky offers wind power at $.0195/kWh above standard costs.	7	50%	**Electrical/CRSA**	Always available for purchase or Owner chooses.

Materials & Resources

		Possible Points		Responsible Party	
C	prereq 1 **Storage & Collection of Recyclables** Facilitate the reduction of non-hazardous waste generated by building occupants that is hauled to and disposed of in landfills by providing recycling areas.	req'd	100%	**CRSA**	
C	credit 1 **Building Reuse** (1-4 points possible) *If the project includes an addition to an existing building, the square footage of the addition may not be more than 2 times the square footage of the existing building to achieve this point.*				
C	credit 2 **Construction Waste Management** (1-2 points possible) Salvage/Recycle 50% min (1 point) -75% min (2 points) of nonhazardous construction waste. *Soil & land clearing do not contribute to this credit.*	2	75%	**Contractor**	

NC	EB	Points
26%	22%	8
28%	24%	9
30%	26%	10
32%	28%	11
34%	30%	12
36%	32%	13
38%	34%	14
40%	36%	15
42%	38%	16
44%	40%	17
46%	42%	18
48%	44%	19

© 2010, CRSA. All rights reserved. No claim to copyright is made for original U.S. Government works.

CRSA

Unified Lab Module 2 - LEED-NC 3.0 Project Checklist Template

C	credit 3 **Materials Reuse (1-2 points possible)** Specify 5-10% cost of division 02-10 building materials. Specify salvaged or refurbished materials for 5% (1 point) or 10% (2 points) of building materials.	0	30%	Contractor	
C	credit 4 **Recycled Content (1-2 points possible)** Specify 10-20% cost of division 02-10 building materials. Specify a minimum of 10% (post-consumer + 1/2 pre-consumer) (1 point) or 20% (post-consumer + 1/2 pre-consumer) (2 points).	1 1	70%	Contractor	Documentation reqmts to be included in spec.
C	credit 5 **Regional Materials (1-2 points possible)** 10% (1 point) or 20% (2 points) cost of division 02-10 building materials shall be extracted, processed & manufactured within a 500mi radius.	1 ?	70%	Contractor	Documentation reqmts to be included in spec.
C	credit 6 **Rapidly Renewable Materials (1 point possible)** 2.5% cost of division 02-10 building materials, i.e., bamboo flooring, wool carpet, etc.	0	30%	Contractor	
C	credit 7 **Certified Wood (1 point possible)** Encourage environmentally responsible forest management by using **certified wood for 50% of permanently installed wood**.	1	70%	Contractor	Documentation reqmts to be included in spec.

Indoor Environmental Quality

		Possible Points		Responsible Party	
C	prereq 1 **Minimum IAQ Performance** Establish minimum indoor air quality (IAQ) performance as per sections 4 through 7 of ASHRAE 62.1-2004 Ventilation Rate Procedure.	req'd	90%	Mechanical	
C	prereq 2 **Environmental Tobacco Smoke (ETS) Control** **option a:** Prohibit indoor smoking and locate outside smoking areas far from windows, intakes or doors. **option b:** use designated smoking areas with stringent requirements **option c (residential buildings):** prohibit smoking in common areas, properly locate outside smoking areas and seal penetrations and chases between residential units.	req'd	90%	CRSA	No smoking allowed in the building. Confirm if there is a designated smoking area on campus.
C	credit 1 **Outdoor Air Delivery Monitoring (1 point possible)** Provide capacity for ventilation system monitoring to sustain occupant comfort. Monitor *densely* occupied spaces and outdoor airflow rates. *Naturally ventilated spaces have different requirements.*	1	75%	Mechanical	
C	credit 2 **Increased Ventilation (1 point possible)** **option a:** Breathing zone outdoor air ventilation rates to all occupied areas shall exceed ASHRAE 62.1-2004 minimum rates by 30% **option b:** Design natural ventilation systems for occupied spaces to meet the recommendations set for in the Cartered Institution of Building Services Engineers (CIBSE) Applications Manual 10:2005 AND use diagrams and calculations to show that the design of the natural ventilation systems meets CIBSE. **option c:** Use a macroscopic, multizone, analytic model to predict that room-by-room airflows will effectively naturally ventilate, defined by ASHRAE 62.1-2007 for at least 90% of occupied spaces	1	60%	Mechanical	Heavily dependent upon mech system selected, to review with mech.
C	credit 3 **Construction IAQ Management Plan (1-2 points possible)** **3.1.** During Construction Develop and implement an Indoor Air Quality (IAQ) Management Plan. **MERV 8** on systems in use during construction, no forced air filters at grilles.	1	75%	Contractor	Reqmts to be provided in spec.
C	**3.2.** Before Occupancy **option a (flush out):** total air volume of 14,000 cuft/sf of floor area while maintaining an internal temperature of at least 60degF and relative humidity ≤ 60% **OR** if occupancy is desired prior to completion, 3,500 cubic feet of outdoor air per square foot of floor area must be delivered. Flush shall continue at 0.3 cfm/sf until 14,000cuft/sf has been achieved. **option b (air testing):** Conduct IAQ testing showing less than maximum concentrations listed.	1	75%	Contractor	Review flush duration with construction schedule. Mech to determine flush legnths and option durations.
C	credit 4 **Low-Emitting Materials (1-4 points possible)** **4.1.** Adhesives & sealants must meet the VOC limits *(including aerosol adhesives)*	1	75%	Contractor	Reqmts to be included in spec and reviewed by archtiect.
C	**4.2.** Meet VOC limits by Green Seal for paints, coatings, primers, varnishes, sealers, stains, etc.	1	75%	Contractor	Reqmts to be included in spec and reviewed by archtiect.

© 2010, CRSA. All rights reserved. No claim to copyright is made for original U.S. Government works.

CRSA

Unified Lab Module 2 - LEED-NC 3.0 Project Checklist Template

C	**4.3. option a:** Carpet system must meet or exceed requirements carpet: CRI Green Label Plus carpet pad: CRI Green Label adhesive: VOC limit 50 g/L (same as EQ 4.1) Hard Surface flooring must be certified with FloorScore - vinyl, linoleum, laminate flooring, wood flooring, ceramic flooring , rubber flooring, and wall base All floor finishes shall meet SCAQMD Tile setting adhesives and grout must also meet SCAQMD **option b:** All flooring elements installed in the building interior must meet the testing and product requirements of the stated standard	1	75%	Contractor	Reqmts to be included in spec and reviewed by archtiect.
C	**4.4.** Composite wood and agrifiber products must contain **no** added **urea-formaldehyde** resins. *On-site and shop assemblies must comply.*	1	75%	Contractor	Reqmts to be included in spec and reviewed by archtiect.
C	credit 5 **Indoor Chemical & Pollutant Source Control (1 point possible)** Issue 1: Permanent entryway systems at all entries connected to the outdoors. 10' direction of travel Issue 2: janitorial closets, copy rooms & chemical mixing rooms all vented directly to exhaust ducts, have deck to deck partitions, self-closing doors, with pressure differentials as described. Issue 3: Use MERV 13 filters for both return & outside air prior to occupancy. Issue 4: Provide containment for appropriate disposal of hazardous liquid wastes in places where water and chemical concentrate mixing occur.	1	75%	CRSA	Ensure use of MERV 13 filters, wall details and entry mats.
C	credit 6 **Controllability of Systems (1-2 points possible)** **6.1 Lighting:** provide controls for 90% of occupants and controllability for all shared spaces that meets group needs/preferences.	1	70%	Electrical	Acheivable only if Owner purchases furniture with switchable task lights for offices. Lab benches shall have switchable task lights also.
C	**6.2 Thermal Comfort:** provide controls for 50% of occupants and controllability for all shared spaces that meets group needs/preferences.	?	50%	Mechanical	Review office areas for shared offices that may make this credit difficult to achieve.
C	credit 7 **Thermal Comfort (1-2 points possible)** **7.1 Design.** Provide for a thermally comfortable environment using ASHRAE 55-2004 Thermal Comfort Conditions for Human Occupancy	1	70%	Mechanical	
C	**7.2 Verification.** Achieve EQ 7.1, provide a permanent monitoring system to ensure that building performance meets the desired criteria and agree to conduct a thermal comfort survey of occupants within 6-18 months after occupancy	1	70%	Mechanical/CRSA	
C	credit 8 **Daylight & Views (1-2 points possible)** Provide a connection between indoor spaces and outdoor environments through the introduction of sunlight and views into the occupied areas of the building. **8.1 Daylight.** Achieve sufficient daylighting in 75% of all occupied spaces using one of the following methods: **option a:** (simulation) computer simulation that 75% or more of regularly occupied spaces achieve 25 footcandles **option b:** (perscriptive) a combination of side-lighting and or top-lighting to achieve daylighting zone of at least 75% of regularly occupied spaces **option c:** (measurement) 25 footcandles taken on a 10ft grid **option d:** (combination) any of the above may be combined to document daylight for 75% of all regularly occupied spaces	?	40%	CRSA	Project to pursue good daylighting and views but likely to be difficult to achieve LEED reqmts.
C	**8.2 Views.** Give access to views from 90% of all occupied spaces (not including systems furniture).	?	40%	CRSA	

Innovation & Design Process

		Possible Points		Responsible Party	
C	credit 1 **Innovation in Design (1-5 points possible)** Exceptional performance above requirements set by the LEED Green Building Rating System and/or innovative performance in Green Building categories not specifically addressed by LEED. **option a: Innovation in Design (1-5 points possible)**				
C	Innovation in Design: Education	1	75%	CRSA	
C	Innovation in Design: Low Mercury Lighting	?	50%	Elec	Review if this credit is available to the project.
C	Innovation in Design				
C	Innovation in Design				
C	Innovation in Design				

© 2010, CRSA. All rights reserved. No claim to copyright is made for original U.S. Government works.

CRSA

Unified Lab Module 2 - LEED-NC 3.0 Project Checklist Template

option b: Exemplary Performance (1-3 points possible)

d Exemplary Performance

d Exemplary Performance

d Exemplary Performance

C	credit 2 LEED Accredited Professional (1 point possible) To support and encourage the design integration required by a LEED Green Building project and to streamline the application and certification process.	1	100%	CRSA

Regional Priority

	Possible Points		Responsible Party	
RP Credit 1 Regional Priority (1-4 points possible)				
Regional Priority: SS 2.0 - Development Density & Community Connectivity	0	10%	CRSA	Project site not located in an area of density or with needed services.
Regional Priority: SS 4.1 - Alternative Transportation - Public Transportation Access	0	10%	CRSA	Only one bus line available.
Regional Priority: WE 1.0 - Water Efficient Landscaping	0	30%	CRSA-Site	Not anticipated.
Regional Priority: EA 1.0 - Optimize Energy Performance- 36% improvement	?	30%	Mech	
Regional Priority: EA 2.0 - On-site Renewable Energy- 5%	0	30%	Elec/CRSA	
Regional Priority: EQ 8.1 - Daylight and Views: Daylight	0	30%	CRSA	

total possible points **50** + 8 other possibles

40-49 Certified 50-59 Silver 60-79Gold 80-110 Platinum

© 2010, CRSA. All rights reserved. No claim to copyright is made for original U.S. Government works.

CRSA

SECTION 2 |Presentation Drawings

SECTION 2 |Site Plan

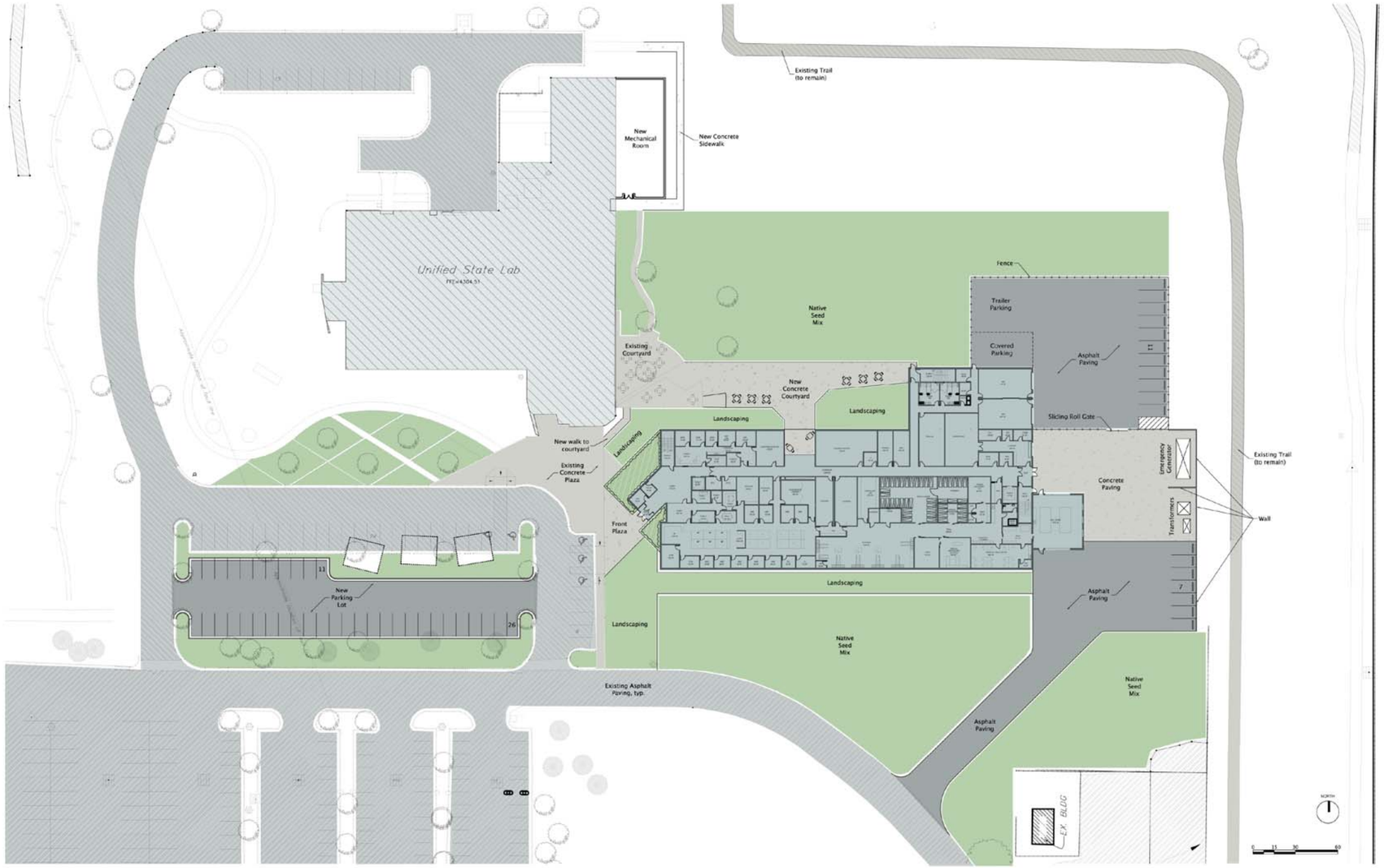

site plan

SECTION 2 |Site Plan Arial View

site aerial view

SECTION 2 |East Elevation

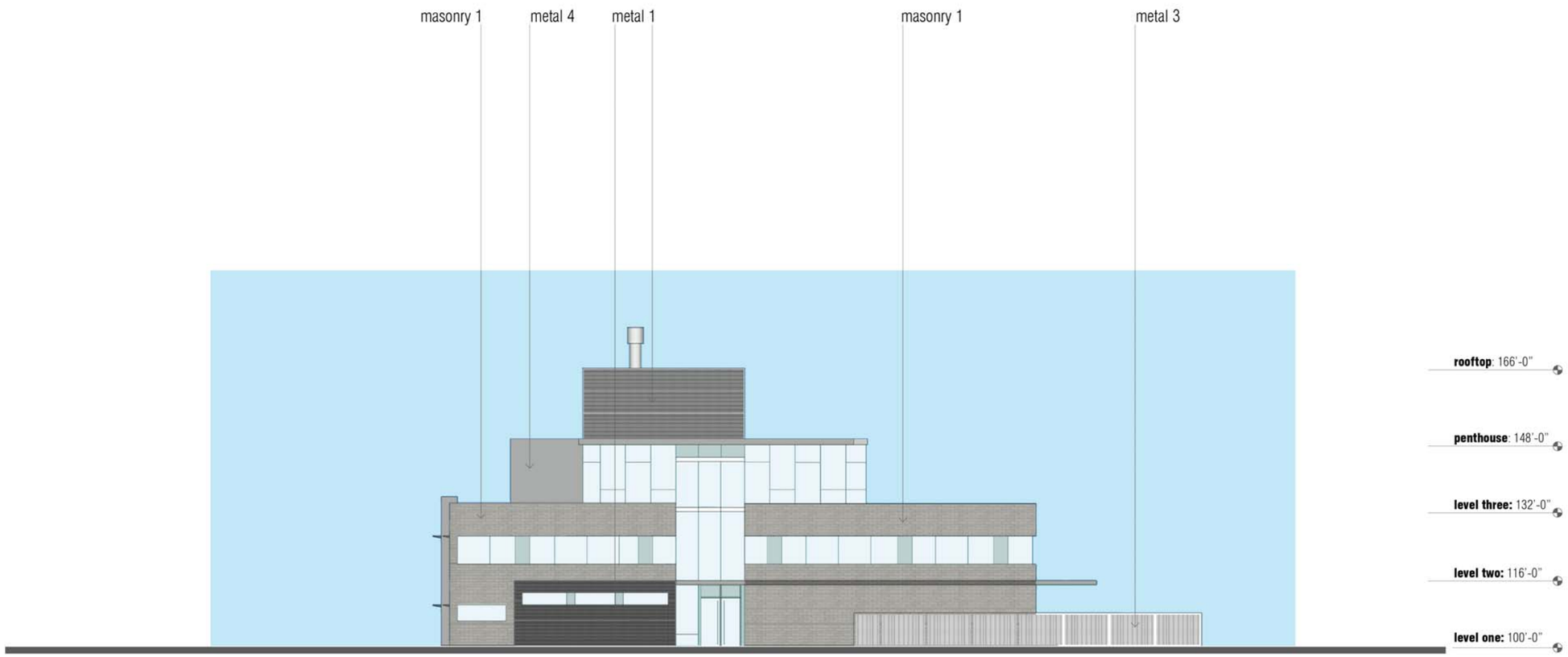

east elevation

SECTION 2 |South Elevation

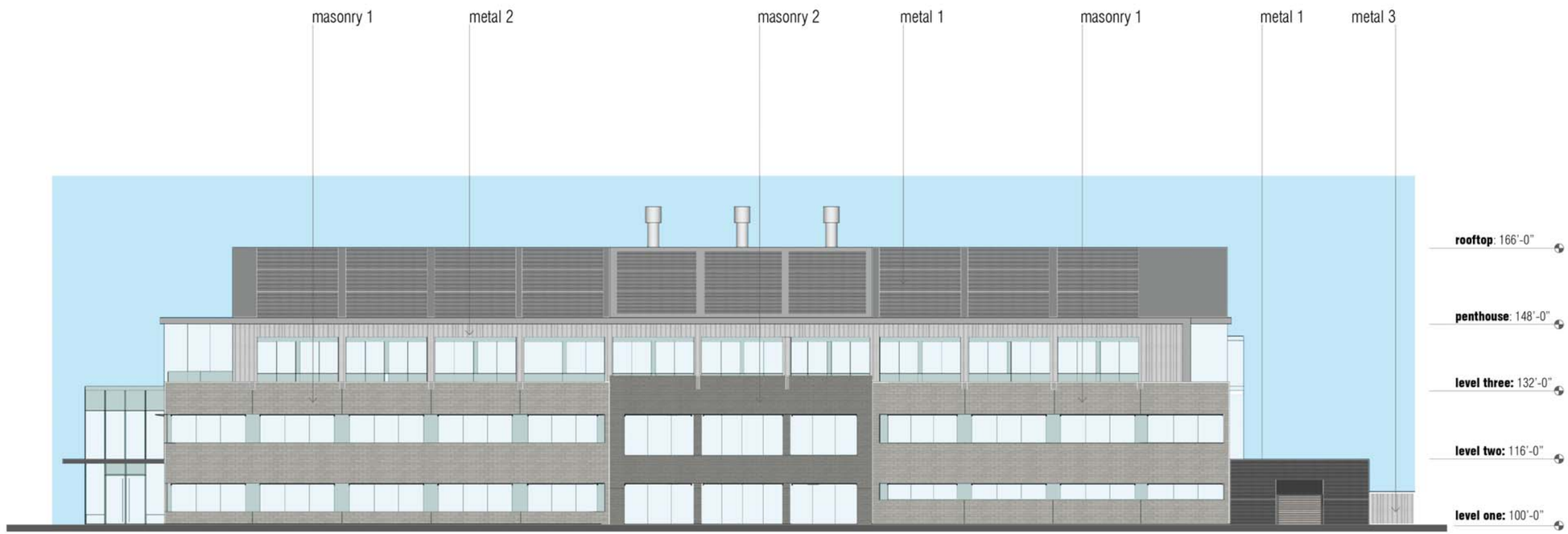

south elevation

SECTION 2 |West Elevation

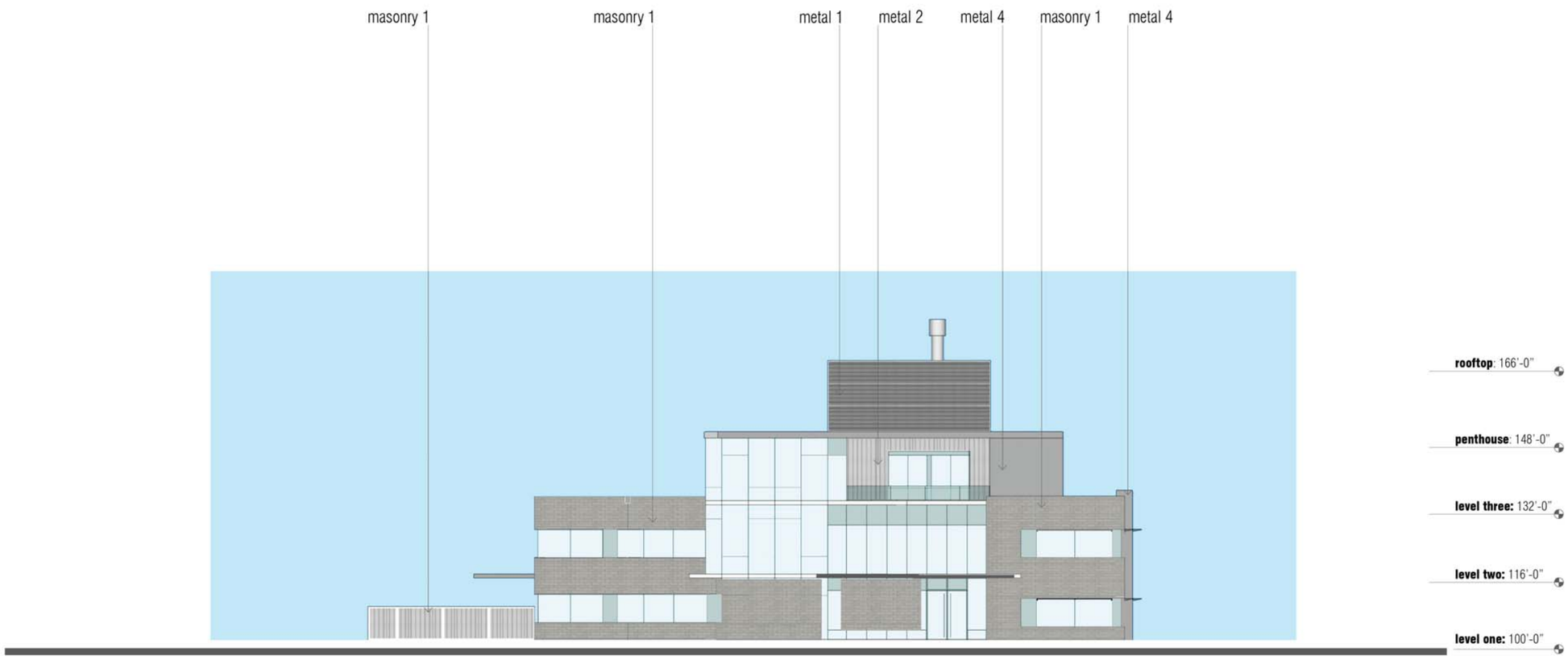

west elevation

SECTION 2 |North Elevation

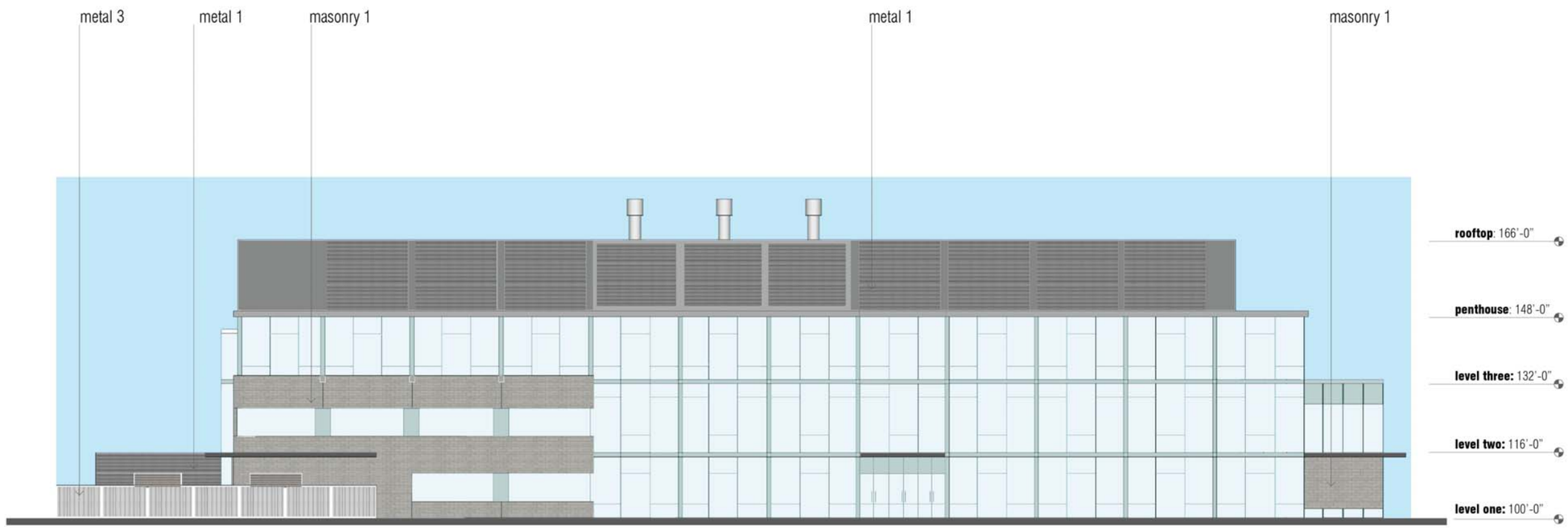

north elevation

SECTION 2 |Massing Studies

South West

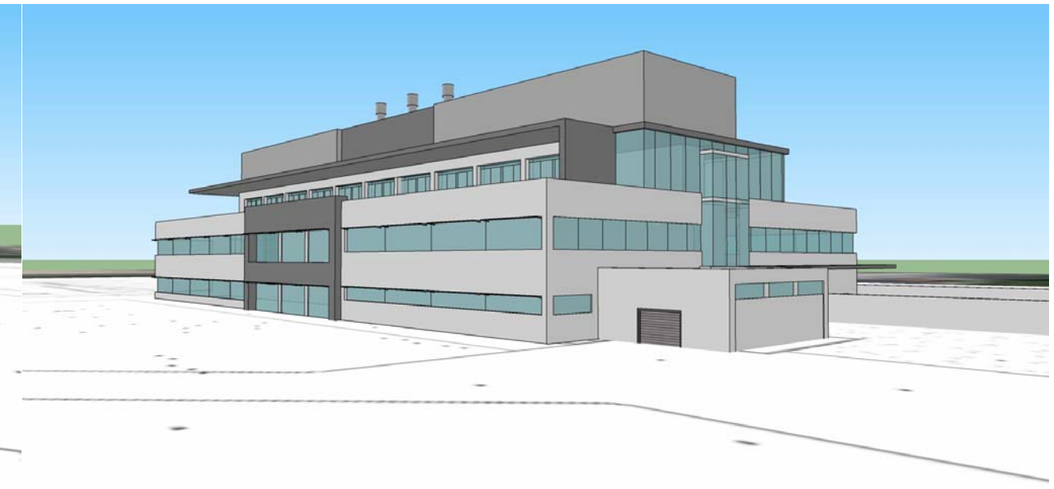

South East

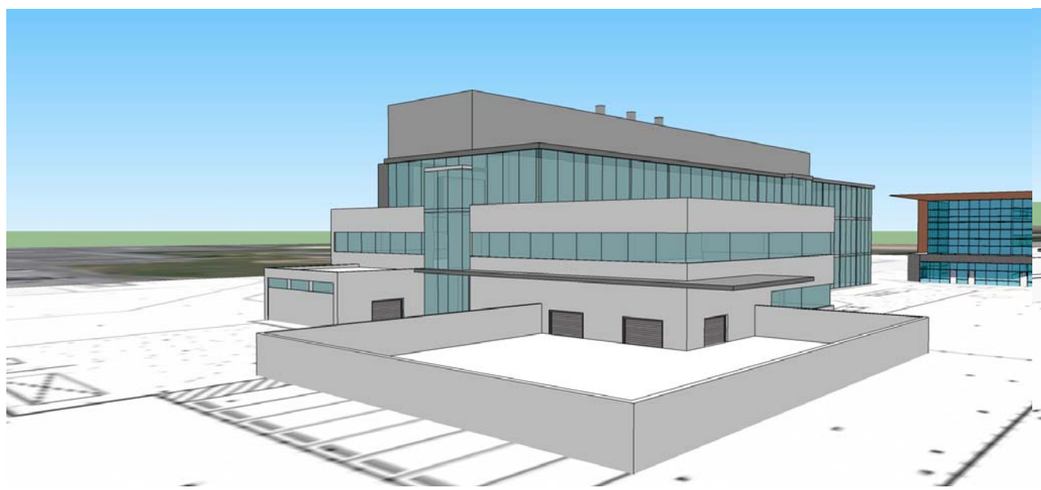

North East

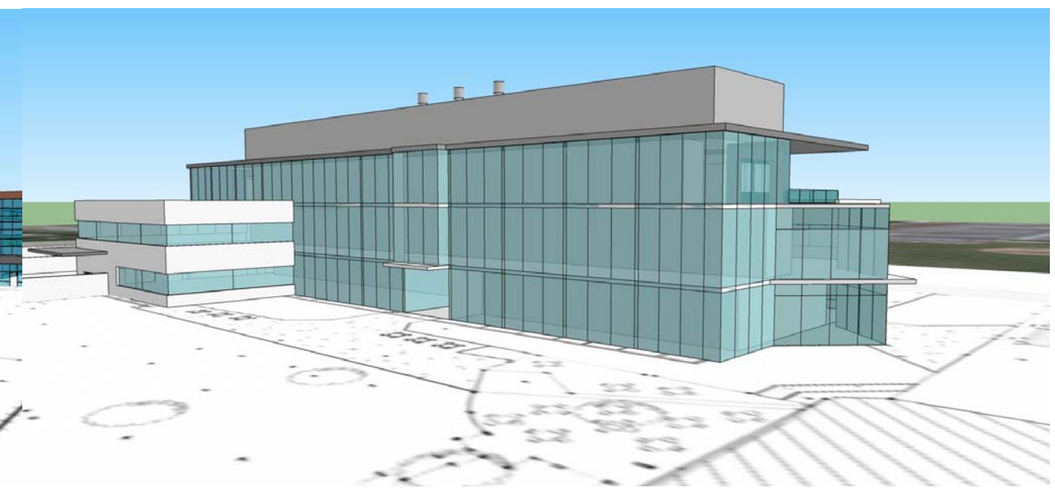

North West

SECTION 3 | Basis of Design

LABORATORIES

Building Codes:

- As referenced in section 5

Laboratory design standards and regulations:

- United States Department of Justice, National Institute of Standards and Technology, Forensic Laboratories Handbook for Facility Planning, Design, Construction, and Moving
- Department of Health and Human Safety (HHS), Center for Disease Control and Prevention (CDC), Biosafety in Microbiological and Biomedical Laboratories (BMBL) 5th Edition
- American Society of Crime Laboratory Directors Laboratory Accreditation Board (ASCLD/LAB):
- ISO Accreditation Guidelines
- National Association of Medical Examiners (NAME)
- EPA: Environmental Protection Agency (4844 Facility, Safety, Health and Environmental Management Manual)
- National Institute of Health (NIH) design standards
- Clinical Laboratory Improvement Amendments (CLIA)
- Scientific Equipment & Furniture Association (SEFA) standards
- Americans with Disabilities Act (ADA) requirements
- American National Standards Institute (ANSI) (Codes regarding emergency eye wash and shower facilities)
- National Institute for Occupational Safety and Health (NIOSH) regulations regarding firing room ventilation issues
- Occupational Safety and Health Administration (OSHA): standards for Air Quality and Personnel Handling of Hazardous Materials and Blood Borne Pathogens
- National Environmental Laboratory Accreditation Conference (NELAC)
- National Laboratory Response Network (LRN)
- National Sanitation Foundation Document NSF 49 for design, exhaust requirements, and certification of Class II biological safety cabinets
- Occupational Safety and Health regulations: 29 CFR 1910.1048(d)(1) for exposure to formaldehyde; 29 CFR1910.151(c) workers exposed to possible serious eye or skin injuries from prolonged exposure to harmful or corrosive materials
- LEED (Leadership in Energy & Environmental Design):

LABORATORY DESIGN GUIDELINES

Laboratory planning module:

A repetitive planning module will be incorporated into the laboratory design at both large and small scales to achieve an efficient and flexible organizational pattern. While a large, 22 or 33-foot structural and planning module works well in conjunction with the design of the laboratory facility, it is based on multiples of a smaller basic planning module of 11 foot x 11 foot. The basic 11-foot planning module is based on the width of laboratory casework on two walls separated by a 5-foot to 6-foot wide aisle. All other systems, including lighting, service distributions, HVAC grille locations, sprinklers, etc., can be organized on this planning pattern as well. This modular planning approach permits achievement of a highly flexible and adaptable laboratory environment while maximizing the integration of all building systems. The existing building column layout has been reviewed and is expected to be adaptable to a design module close to the basic 11-foot dimension.

Flexibility & Expandability:

Laboratories are evolving at a rapid rate. The development of new laboratory procedures changes in crime trends, and political considerations all tend to influence the type of laboratory work and quantities of evidence and samples being processed in the laboratory. As a result, laboratories frequently experience the need for growth and change over their life span.

The building organizational concept must provide expansion options to accommodate the growth of laboratory programs, staff increases, and addition of new programs and equipment.

Examples of design flexibility include the following:

- Mobile Furniture: Cabinets and tables on wheels can be used to provide adaptable work surfaces. Multiple tables can be easily moved together to form larger work surfaces when the need arises.
- A movable wall between two similar spaces enables conversion to a larger space when needed.

Biological Hazards / Chemical Hazards:

Recent regulatory requirements issued by the United States Occupational Safety and Health Administration (OSHA) mandate the need to provide protection for workers encountering biohazards materials. The Forensic Science laboratory and Medical Examiner investigate a relatively high number of cases that originate from the criminal community, known to carry a higher incidence of dangerous diseases. Primary risks to staff are posed by such dangerous pathogens as Hepatitis A, B, & C; Tuberculosis; HIV (AIDS); and Aspergillus Fumigatis, to name a few. High-risk materials also include all serological evidence (evidence saturated with body fluids or biological tissue). These materials must be treated with exceptional care.

- In view of the biologically-and chemically-hazardous nature of the work in each laboratory unit, it is important that the laboratory staff be provided with separate office / report writing areas in a "clean" space outside of the laboratory.
- It is recommended that all air-ventilation systems serving laboratory spaces where biological or chemical agents are present, be served with independent air handling systems with once-through (100%) exhausted airflow.
- HEPA filtration is required for exhaust from the firing range and projectile recovery room in the firearms / tool marks section.

Office environments:

All of the laboratory sections include separate report-writing workstation areas near their laboratory space. These areas should be designed as standard office space with access to the laboratory corridor and adjacent laboratory area through a laboratory vestibule. Each scientist's 'clean' furniture workstation will be standard-sized 8’ x 8’, modular-systems, open office. This office space has some degree of visual access to the adjacent laboratory it serves.

Laboratory vestibule:
Vestibules are provided at the entry points to laboratory areas to provide a physical and air (HVAC) separation between the biohazards zone and clean office areas. These vestibules minimize the potential transfer of biological contaminants to clean areas. When leaving a biohazards zone, staff members are required by policy to remove laboratory coats and to clean up prior to moving to the office area. Similarly, when moving from the clean office zone to the biohazards area, staff members are required to put on protective laboratory clothing.

- This space will contain a hand-washing sink with hands-free controls, coat hanging rack, and storage cabinets.
- Other special features in the vestibule include spill kits, a fire extinguisher cabinet, safety kits, electrical panels, and a plumbing systems control panel (hot water, cold water, compressed air or gases) for the lab section the vestibule serves.
- The vestibule must be maintained under negative pressure relative to the outer clean areas, and positive pressure relative to the biohazards area in order to maintain a cascading flow of clean air from the clean office environment to the potentially biohazardous lab zone. This containment strategy greatly reduces the risk of odors and airborne contaminants escaping from the laboratory areas.

Exterior walls:
Optimally exterior wall materials should include bullet-resistant materials such as concrete or masonry construction. Ground floor windowsill height should be a minimum 4'-0" above the finished floor in order to reasonably protect seated occupants from a weapon fired from the surrounding site. The 48" high windowsill also coincides with the top of the electrical raceway, which is located just above the backsplash. Window glazing should be sufficiently reflective to prevent daytime viewing into the building from the exterior, while not adversely altering color rendition of evidence or samples being examined.

Window frames at the sill ideally should not project more than 1-3/4" (preferably less) from the exterior face of the glass and if so the sills should be sloped 45° minimum in order to prevent the placement of combustibles / explosives next to the window.

Doors:

- Oversized or double doors are required from corridors to major laboratory spaces.
- Door lites are required in all doors except where a darkenable room is required or in doors leading to evidence storage rooms.
- Gasketed doors may be needed where required by the mechanical engineer for maintaining room pressurization, and to prevent hatched insects from escaping from drying rooms.
- Special Autopsy doors are to be designed using the inward airflow principal creating containment therefore do not have gaskets.

Laboratory tours:
The facility is designed so that guided tours of the laboratory can be conducted at the option and discretion of the laboratory.

- Tour groups are not to be allowed any closer to the laboratory spaces than the outside corridors serving these spaces.
- Viewing windows can be installed in the corridor walls to facilitate viewing of certain laboratory areas. Viewing at the autopsy areas is not included.
- Display cases will be used to illustrate graphically the functions of each laboratory section in order to further educate tour groups. These are placed next to the viewing windows to enhance the learning experience.

Viewing between laboratory spaces:
As a general safety feature, it is desirable that laboratory staff members be able to maintain visual connection between adjacent laboratory spaces. The use of interior windows between laboratory spaces not only enhances safety, but also enhances the overall laboratory environment.

“Essential” facilities:
This laboratory is NOT required to be classified as an "essential" facility by Building Codes. Only the Medical Examiner Special Autopsy and the Body Storage rooms will have components that are considered necessary for operation without the support of exterior utilities. Building hardening per essential facilities needs is not designed.

Serving Americans with Disabilities:
Federal Legislation mandates that spaces of “public accommodation” must be accessible to all Americans. Specific items recommended to achieve ADA compliance in laboratories include the following (typical in each laboratory section, as a minimum):

- Designation of one ADA-compliant workstation with, a 34" high counter in each laboratory section;
- One ADA-compliant fume hood in each laboratory section, in close proximity to the ADA-compliant workstation;
- Unless waived by the Owner, ADA-compliant sinks in the laboratory vestibules and in one other location in each laboratory section in close proximity to the ADA-compliant workstation;
- ADA compliant emergency shower / eyewash units; (The use of adaptable laboratory casework enhances the ability to make additional modifications to suit handicapped individuals in the future.)

Emergency eyewash and shower units:

- Provide combination emergency eyewash and shower units no more than 10 seconds walk from any point in the laboratory in accordance with ANSI Z358.1-1998 regulations. Utilize manufactured products, not site-built units, and assure ADA compliance. Provide a hard plumbing drainage connection from the eyewash bowl drain.
- At each laboratory sink, provide a deck-mounted, drench hose emergency eyewash for added safety. Such eyewash units are common practice and are expected by most laboratory staff.

- Locate at least one combination emergency eyewash and shower unit outside the laboratory areas, in each primary egress corridor. This recommendation is for the use of anyone who must exit the laboratory space due to chemical fumes resulting from an accidental spill.

Pressurization in lab spaces:

- Labs generally are to be under negative pressure relative to adjacent office and corridor areas. This is to ensure that airborne contaminants and fumes stay in the lab areas. Flow of air should always be from clean areas (i.e. offices and corridors) to lab areas
- Avoid excess negative pressurization to the exterior to prevent infiltration of moisture and exterior dust. This issue needs to be reviewed with the CRSA and engineer relative to the design of the exterior envelope of the existing building. It is recommended to use an air-barrier rather than a vapor-barrier.

Low velocity airflow:

Rooms where low velocity airflow is needed will be identified, to avoid disturbing small particles such as hairs and fibers. This can be achieved by means of larger ducts, special diffusers, and a greater numbers of diffusers.

Fume hoods:

- All fume hoods will be Class A, chemical fume hoods for either a variable air volume (VAV) or constant volume (CV) as recommended by the mechanical engineer.
- Install all fume hood exhaust fans in a rooftop enclosure and isolate them from the building structure and laboratory spaces.
- Equip all chemical fume hoods with GFI fume hood power outlets and explosion-resistant light fixtures.
- Make available plumbing options that include vacuum, compressed air, water, and other gases.
- Provide all fume hoods with a UL listing label.

Biological safety cabinets:

Biological safety cabinets are used instead of fume hoods when two additional requirements must be met which cannot be achieved with fume hoods: 1) Additional user protection is required from biological agents. This added protection is achieved by means of a lowered sash height and the use of the sash as a splashguard; 2) Evidential material and biological samples in the hood must be maintained free of contamination from the air which passes over it. Biological safety cabinets deliver a supply of HEPA filtered air over the samples contained within to avoid contamination.

The control interfaces and HVAC requirements are quite different from fume hoods. The HVAC engineer will need to review pertinent sections of the biological safety cabinet specification, relating to interfacing between the HVAC systems design and the hood sash controls, monitors, etc.

- Biological safety cabinets: List all biological safety cabinets with UL-listed Class II Type A2, complying with NSF-49; equip cabinets with GFI power outlets and light fixtures. Lighting can include an ultraviolet disinfectant light if required by the laboratory staff. Plumbing options include vacuum, compressed air, and other gases.

Articulating arm / task-exhaust units (snorkels):

Task-exhaust units will be located selectively where local exhaust would be advantageous to laboratory staff for small desk-top procedures involving odoriferous evidence or procedures, instrument exhaust, or removal of heat from instruments. Task-exhaust units would never be used in place of a fume hood or biological safety cabinet.

- Task-exhaust units are UL-listed.

Work surfaces:

- At laboratory bench surfaces where chemicals and acids will be used or biological hazards are present, utilize epoxy resin countertops.
- Stainless steel countertops will be used in the autopsy area and supporting spaces.
- Work surfaces in non-laboratory areas, such as offices, administration, and clerical areas can be standard plastic laminate.

Laboratory sinks:

- Provide epoxy-resin sinks in all epoxy-resin countertops.
- Provide stainless steel sinks in all stainless steel countertops in autopsy.
- Provide deck eyewash units at each laboratory sink.
- Provide hands free (foot pedal) operation at each laboratory sink, except at ADA-compliant sinks provide infrared-operated sink controls.
- Provide polypropylene-lined, purified water fittings at lab sinks. (Refer to the following section on the purified water system.)

Purified water:

- From a central plant, provide ASTM type III (1 mega-ohm) purified water to identified laboratory sinks. At selected lab sinks, provide ASTM type I (18 mega-ohm) purified water from individual point-of-use polishing units at various laboratory sinks where this higher purity is required.
- Design and specification of all components of the purified water system, excluding faucets, are to be covered by the plumbing engineer under a single specification section. Faucets will be specified in the lab fixture package and installed by the pure water contractor. This approach helps to ensure that the entire purified water system installation is under the responsibility of one contractor and vendor.
- Type III water will need to be piped to all under counter lab glassware washers.

Chemical resistant (acid waste) plumbing:

- Equip sinks throughout the laboratory with waste lines to handle the disposal of chemicals and corrosive acids. Supplement this with a dilution system, neutralizing filters, or holding vessels. Install such acid waste systems in all laboratory sections where chemicals or acids are used.

- Provide acid waste lines for the hands-free clean sinks in bio-vestibules.

Chemical storage & chemical waste holding rooms:
Design these rooms to be explosion-resistant.

- In the chemical storage room and chemical hazard room, provide explosion-resistant design classification of class 1, division 2 (chemicals always in closed containers). In the chemical hazard room, explosion-resistant design classification shall be class 1, division 1 (if chemicals will be transferred). Design chemical storage rooms and hazardous chemical holding rooms with a blowout panel to direct the force of a potential explosion in the safest direction possible "if transfer of chemicals is to be performed within the room".
- Chemical storage generally occurs in approved fire resistant chemical storage cabinets with internal spill containment in laboratory spaces and the chemical storage room.
- Chemical storage rooms should be well ventilated (at least 12 air changes per hour) and as directed by the HVAC engineer.
- Acid storage cabinets will need to be exhausted, with a recommended minimum of 12-15 air changes per hour from the cabinet and as directed by the HVAC engineer. The exhaust duct should be tied into the fume hood exhaust duct by division 23. The location of this tie-in should be studied by the HVAC engineer to avoid problems with the controls systems.
- Generally, the ventilation of flammable chemical storage cabinets is not recommended by NFPA 30, unless there is a compelling reason to, for health or safety reasons. (The ventilation of flammable cabinets could compromise the ability of the cabinet to protect its contents adequately from involvement in a fire. The UL listing of these cabinets is based on fire testing of cabinets with vent outlets plugged; this means that if the cabinets are ventilated then the UL listing is compromised.) Therefore, only selected flammable chemical cabinets are ventilated in cases where outgassing cannot be eliminated by the chemical container. In such cases where the cabinets must be ventilated, this must be done directly to the outdoors in such a manner that it will not compromise the specified performance of the cabinet and in a manner that is acceptable to the authority having jurisdiction. At ventilated flammable chemical storage cabinets, the supply and exhaust ductwork will need to be designed by the engineer to be fire resistant, in accordance with NFPA.

Instrument rooms:
Requirements for instrumentation rooms are as follows:

- Supplemental cooling: Instruments in these rooms will produce excess heat. Therefore, equip these rooms with a cooling system designed accordingly.
- Instrument Exhaust: To minimize supplemental cooling requirements, a local exhaust unit is required at instrument workstations to exhaust heat or chemical fumes. Additionally, an exhaust port is required in each vented base cabinet where the roughing pumps will be housed. Local exhaust of excess heat from instruments can greatly decrease the need for supplemental cooling of the instrument room.
- Ultra pure laboratory gases: Various instruments in these rooms will consume nitrogen, hydrogen, helium, and lab grade air, which must be plumbed to ultra pure laboratory gas fittings located on the laboratory instrument benches. Argon, helium and nitrogen are to be cylinder-fed. The plumbing engineer as an integral part of their laboratory gas distribution system will design the system based on gas usage capacities for each instrument. Pipe all ultra pure gases through a stainless-steel laboratory gas distribution system having a purity level of 99.999% (5 nines purity). The stainless steel piping should be delivered to the job site capped and bagged to maintain this level of purity from the factory. The entire ultra pure gas distribution system should be designed by the lab plumbing engineer and must be constructed and installed by a specialty gas contractor who is highly experienced in this kind of work. The following UHP gases are limited to the instrument rooms and will be located on subsequent lab plans.
- UHP Helium: 99.999% purity (5 nines), cylinder fed.
- UHP Nitrogen: 99.999% purity (5 nines), cylinder fed.
- UHP Nitrogen: 99.99% purity (4 nines), cylinder fed.
- UHP Hydrogen: 99.999% purity (5 nines), generator-fed
- UHP Argon: 99.999% purity (5 nines).
- UHP spare instrument gas: 99.999% purity (5 nines),
- Lab Compressed air: A medical-grade compressed air system will need to be designed by the plumbing engineer capable of delivering a minimum of 110 psi of pressure to the bench top lab gas fittings. This will be piped to the fume hoods and bench air outlets. Medical grade quality (breathing air) purity needs to be defined by the engineer and verified by the lab, but should be at least 99.95% pure.
- UHP gases will be plumbed to ultra pure quick disconnect gas fittings located on the lab benches. The bench top fittings and the lab gas distribution system will be designed and specified by the engineer. Keep in mind the lab gas piping system (including bench top fittings) must be installed by a specialty gas contractor, who should be pre-qualified.
- Gas flow rates and pressures for each instrument for each gas need to be verified with the lab staff.
- There should be a recessed gas annunciator panel in the instrument room containing the annunciator device to alert staff when one of the manifolded cylinders is empty. Additional gas dryers and filters may be installed in line by the lab staff at the instruments.
- The new and empty gas cylinders will be located in the gas cylinder room at the ground floor loading area. Local cylinder rooms with manifolds will be created near laboratory units. The gas cylinders should be manifolded in pairs, with an automatic, switch-over device. The dual manifolded system enables the gas system to deliver uninterrupted gas when one cylinder goes dry. The lab gas distribution system also should have a two-stage regulation system, which first decreases the 2,000 psi cylinder pressure to a lower level, which is manageable by the lab gas piping system. The second stage of pressure regulation occurs at or near the instrument room, stepping the pressure down to a level that the instrument can tolerate, generally approximately 100 psi. The gas system also should include an alarm to alert lab staff when one cylinder is empty so that it can be replaced before the other one goes empty. From the manifolds, gases should be plumbed to the instrumentation room through stainless steel piping.
- Power: Instrumentation consumes large amounts of power and requires dedicated circuits, emergency power, and UPS. In the instrument rooms, provide a two-compartment electrical raceway with 8 electrical outlets for each 8 feet of instrument

bench. Provide a minimum of 2 dedicated, 110v, and 20 amp circuits at each 8 feet of instrument bench. Provide computer network outlets spaced as required for the instrumentation, but no less than 4 foot on center. As some instruments require 208 volts as well, provide one 208v outlet for each 8 feet of instrument bench. Roughing pumps will be located in ventilated cabinets below the counter. These cabinets will be exhausted and will need to have a duplex electrical outlet for the pumps.

Exam (search) rooms:

- Exam rooms require a 10'-6" high ceiling for installation (present or future) of the ceiling-mounted photo / light track systems.
- The exam room ceilings should be gypsum board.
- Exam rooms should be designed with low velocity air flow to avoid disturbance of small evidential particles.
- Provide down-flow air in exam rooms. The air flow in exam rooms should be supplied from the ceiling and exhausted from wall exhaust grilles located 12" above the floor. This provides a laminar flow of air from high to low, minimizing contamination of evidence.
- Provide a combination of incandescent lighting and fluorescent lighting in exam rooms. This reduces eye fatigue while doing tedious examination of evidence.

SEM (Scanning electron microscope):

The SEM is a highly sensitive instrument in the Trace Evidence Section. Avoid use of powder-actuated fasteners in the construction of this space and surrounding area. Avoid large electrical feeds, wiring, electrical panels, and electrical devices in close proximity to the SEM, as these could produce electromagnetic fields. Use shielded CAT6 or fiber for data management surrounding these rooms. Vibration control will be an issue for this instrument.

Evidence Storage Space Design Guidelines

Securely construct the evidence storage rooms in order to uphold the chain-of-custody while the evidence is in the jurisdiction of the forensic laboratory. Secure wall construction will consist of heavy-gauge, hardened, steel security mesh applied to the perimeter of stud walls, or the use of concrete masonry wall construction. In division 9, CRSA will specify the security mesh during the design phase. Extend the wall assembly up to the structural deck above or to a security ceiling.

- Lay out lighting at high-density storage areas perpendicular to the row lengths so lighting is provided at all rows. If lighting is parallel to rows, some will be lit and some will not.
- Provide a security system motion detector in the evidence storage room.
- Well-ventilate the evidence storage spaces with 100% exhaust to remove odors.
- Ventilation is important in all evidence areas. Provide a minimum of 15-18 air changes per hour in the main evidence storage area and 18 air changes per hour in areas where drugs and marijuana are stored.
- Provide a chemical storage cabinet for chemical samples such as those received from an arson case.

Firing Room Design Guidelines

The firing room shall be constructed of 8"-thick, reinforced concrete walls and ceiling. The floor should be 6" thick concrete if it is on grade.

- Acoustic protection is critical. Provide 8" CMU enclosures above all duct penetrations (range exhaust ducts, PRT exhaust, supplies, etc.). Build a CMU pony wall above the room on the interior side of the room.
- Supply air always must flow away (downrange) from the shooter. Comply with NIOSH airflow requirements of 75 fpm.
- The projectile recovery tank (PRT) will drain into a floor sink. Thicken the floor slab at this floor sink for acoustical and ballistic protection.
- Provide ballistic panels to the walls and adhere them to the safety ceiling of the PRT area. A suspended ceiling should not be provided. In the PRT area, a full-height space is needed for casings being ejected.

ADDITIONAL SPACE DESIGN GUIDELINES

Biological waste storage:

Well-ventilate this area with 100% exhaust.

Vibration design considerations:

Various areas of the building, in particular the DNA, Trace Evidence, and microscope rooms must be designed to provide a vibration environment consistent with the criteria specified for the equipment to be used in these labs. Design considerations for providing a suitable laboratory environment should include the following to the extent possible within the existing structure:

- Building layout: The layout of the rooms is important insofar as the placement of major mechanical systems relative to the vibration-sensitive areas is concerned. Other layout considerations may emerge when the design is developed.
- Laboratory module layout: Location of laboratories within the building, and with respect to vibration sources outside the building, influences the vibration environment achievable in the lab. Ideal location is the most cost-effective way (and sometimes the only way) to achieve a good vibration environment. The most sensitive labs, such as the SEM room, should be located as far as possible from internal sources of vibration such as mechanical and electrical equipment, elevators, major corridors, loading docks, etc. Position with respect to external sources, such as the adjacent streets, should also be considered.
- Mechanical equipment: Mechanical rooms should be located in a manner as not to influence vibration on an adjacent laboratory. It is important that all major items of equipment (with ratings in excess of 5 horsepower) be designed and installed in such a way that the vibration they transmit to the building structure is controlled. Carefully consider the location of reciprocating mechanical equipment (compressors, chillers, pumps, etc.) due to the vibration produced by this type of equipment. Such equipment should not be located on suspended floor slabs, but rather in a ground floor mechanical room, as the slab on-grade and ground 'sink' will be an effective absorber of vibration. Slabs of mechanical rooms should be isolated around the perimeter of the room. Piping

and associated pumps should not be hung from supported floors as these can also transmit vibration to the structural systems.

- Pipes and ducts: Vibration control must also encompass mechanical systems such as ductwork and piping since these systems also can generate and transmit vibration via turbulent flow. It is most important to limit fluid flow velocities in pipes and ducts since turbulence associated with fluid flow can be a substantial vibration source. For this reason, airflow velocities should be limited to 1800 ft. / min. and liquid flow velocities limited to 7 ft. / sec. Major pipes and ducts (in excess of 4 inches in diameter and 20 inches in diameter, respectively) located under suspended highly vibration-sensitive floors should be supported from the columns or the floor and not directly from the vibration-sensitive floor, even with vibration isolation hangers.
- Inertia bases: Inertia bases should be used for all liquid pumps and, depending on the equipment specifications, for certain exhaust and make-up air fans. The structural design must take these loads into account.
- Vibration criteria: A vibration criterion is usually expressed in terms of root-mean-square (rms) velocity for one-third octave frequencies between 8 and 100 Hz. The specified limits are intended to apply to vertical and horizontal (in two axes) vibration as measured on the structural floor. They do not apply to bench tops.
- General vibration design criteria: Generic laboratories should be designed to a minimum vibration velocity of 2000 micro-inches / second. This criterion may be relaxed once details for specific equipment are known. In general, laboratories with bench-top, medium-power, optical microscopes (20X to 100X), and related equipment with magnifications up to 100X, can be designed to 4000 micro-inches / second, while 2000 micro-inches / second is usually adequate for laboratories with microscopes between 100X to 400X. Laboratories with high-power, optical microscopes (up to 1000X) should be designed to 1000 micro-inches / second.
- Footfall impact: One prevalent source of vibration affecting performance of microscopes is that caused by persons walking on the floor. Dampening of the floor structure is required to minimize footfall impact. Limiting walker response to the above-given general vibration design criteria levels requires the following floor dampening levels, measured in kips / in-seconds (Kf Product): For 4,000 micro-inches / second, use Kf of 2,000 (medium damping) or Kf of 1,000 (high damping). -For 2,000 micro-inches / second, use Kf of 4,000 (medium damping) or Kf of 2,000 (high damping).

Acoustical design considerations:

Noise can affect both personnel and equipment within the building and, if projected in excess into the environment, can impact neighboring buildings. Control of HVAC noise and the careful selection of relevant architectural details can improve communications, speech privacy, and the general condition of work environments. Proper noise control design can also reduce long-term, work-related hearing damage, fatigue, and general annoyance. It is best to consider noise control during the design stage rather than retrofit potentially more-costly noise control measures later. The following are some general comments related to acoustics:

- HVAC design: HVAC layouts must be consistent with the noise requirements. Whenever possible, large ducts should not run above noise sensitive spaces. No duct shafts or plumbing chases should be common with walls of noise sensitive spaces. The need for additional noise control in the form of duct lining, silencers, etc., will be determined as the mechanical design progresses.
- Air volume control devices: Terminal units, VAV boxes, and diffusers must be selected so that the noise they generate is consistent with the recommended Noise Criterion (NC) levels of the rooms they serve. The equipment manufacturer's NC rating may not apply to many rooms within a laboratory facility, as these ratings are usually computed for rooms with a great deal more sound absorption than is found in a typical laboratory. Terminal units shall be selected on the basis of the manufacturer's certified laboratory octave band, sound power levels. Diffusers should be selected for an NC requirement, 5 points lower than the stated room design criterion to account for the impact of multiple diffusers.
- Breakout noise: HVAC breakout noise is the noise that is transmitted into a space through the walls of the ducts. This is most commonly a problem when a particular system has large ducts that pass over an acoustically sensitive space on the way to a space with a much-less-stringent design criterion. Using round ducts may reduce breakout noise.
- General acoustic design criteria: Most laboratories, corridors, and lobbies can be designed to a Noise Criterion of NC-45, while private offices should be designed to NC-35. NC-30 would be appropriate for executive offices, conference rooms, and the library. These criteria are intended to apply to building systems noise sources only. On occasion, they may be applied to other sources, such as the room noise level resulting from external noise sources (aircraft, traffic, etc.), or attributed to known equipment in the room.

Lighting (Artificial and Day-lighting):

Lighting of the laboratory environment is critical to the work that goes on within.

- Color rendition is important. Light fixtures should have a high rendition index (CRI) of around .90, to maximize color rendition of evidence or food products.
- Provide a general lighting level of 100 foot candles of illumination, 3' above the floor, at all laboratories.
- Provide a general lighting level of 500 foot candles of illumination, 3' above the floor, at all autopsy stations.
- Indirect lighting is preferred. Suspended lighting fixtures are preferred over recessed fixtures to give more even light throughout the room. Position light fixtures over the laboratory benches to maximize the effectiveness of the lighting. Recessed fixtures are recommended in exam room and autopsy spaces.
- Locations of dimmable lighting will be identified.
- Lighting at the room will consist of spotlights as well as ambient lighting, each individually switched. Additional lighting, also individually switched, is required over the firing line and in the projectile recovery tank room.
- Dual-level controls and sensor-operated lighting controls default to LEEDs and the electrical engineer.
- Maximize the use of natural lighting to all occupied spaces, especially laboratory spaces. Natural lighting provides for superior color rendition over artificial, color-corrected lighting. Make use of existing window positions.

- Do not tint window glazing as the tinting alters the color spectrum and the rendition of subtle colors and detail in evidential materials. Clear, high-performance glazing is preferred. This type of glazing also has superior thermal characteristics.

Electrical power and data-cabling distribution:

- Raceway: Provide a two-compartment electrical raceway in all laboratory spaces, mounted just above the backsplash. One compartment is for electrical wiring while the other is for data cabling. The top of the raceway will be set at 48” above the floor. Space duplex outlets at 4’-0” on center and space duplex data outlets at 8’-0” on center. At all bench sections less than 4 feet in length, provide at least one duplex power outlet, and at benches less than 8 feet, provide at least one duplex data outlet. The exception will be special areas such as in the instrument rooms and other locations where noted on the plans, e.g. under the instrument bench where power outlets are to be 2 feet on center, and data outlets at 4 feet on center. Incorporate secondary power circuits into this raceway system as well.
- Provide a wall-mounted, data outlet behind each refrigerator and freezer for connection to a PC-based monitoring system. Most lab refrigerators and freezers are available with a data port to remotely monitor temperature in these units.
- Pedestal Boxes: Each to have three outlets and one 2port data outlet.
- Cable Trays: Cable trays should be exposed type, to be specified by the electrical engineer.
- Overhead Cord Reels: All overhead cord reels are to be specified by the electrical engineer. These will be ceiling-mounted, recessed type.

Security electronics:

Equip the facility throughout with a monitored, proximity-access system to match County system. Provide access devices at doors to all laboratory sections and exterior entry doors. Monitor key areas of the building and site by closed-circuit television and captured on time-lapse videotape. Both systems facilitate safer and more convenient checks. Determine the quantity of CCTV cameras by management policy as part of the overall security strategy. As a minimum, the types of locations covered by CCTV cameras for the facility might include, but are not limited to, the following:

- Locate fixed and pan / zoom / tilt cameras to view all exterior sides and entries of the building, including vehicle bay areas, receiving and service areas, parking areas, and vehicle entries to the site. At entries these cameras should view the backs of visitors as they approach the entry (visitors with hostile intent may try to carry a weapon behind them).
- Cover the main interior circulation paths throughout the facility and main entry lobbies, including the evidence receiving room with cameras.
- Include motion detection in evidence storage spaces and in the firearms reference gun collection room.
- A camera is required in the firing room to allow shooters to be viewed from outside the room, in case of a misfire or other accident.
- Provide door-status monitors at all security access doors, interior and exterior, using infrared-room, occupancy monitors / indicators.

Communications (voice, data, digital):

Give consideration to the following design features:

- Design voice and data systems in accordance with the Owner's standards.
- Computer data ports: Provide computer data ports at key points in the laboratory and office areas to permit staff to link computers to their existing local area network (LAN) or laboratory information management system (LIMS). Locate data ports at all designated workstations, functional work areas, office spaces, and in all designated laboratory workstations.
- Digital photography: To enhance the potential for forensic photography in each individual laboratory unit, provide the necessary supplies for accomplishing digital photography in the laboratory areas.
- Consider special grounding at the facilities foundation system, compatible with the Owner's communication systems, to minimize effects of lightning strikes.
- Cable television: During recent disasters and periods of civil unrest, emergency response coordination was aided greatly by continuous reports by television news media. As a result, it is beneficial to provide cable television monitors in key areas, such as the conference room, classroom areas, and division manager's office.
- Provide teleconferencing to the conference rooms.

Emergency power:

The client requires the ability to operate selected aspects of the facility during a power outage. The 'emergency' power system is code-required to serve only emergency loads. The 'standby' system is connected to a separate diesel generator via separate transfer switches and distribution panels. Emergency power locations for equipment items are generally identified below. The exact equipment that will be on the emergency power system will be determined in subsequent phases.

Serve the following loads from the standby power system:

- Selected building lighting
- Selected building and special purpose receptacles
- Building automation system remote panels
- Special Autopsy shall function in its entirety in an emergency condition including exhaust systems & supply air systems
- Body Storage Rooms in Autopsy
- Selected laboratory equipment per the Owner's requirements
- Security system
- Computer servers (file server, IBIS, CODIS, AFIS, LIMS, etc) Provide the appropriate UPS system as required.

HVAC air intakes:

Consider security precautions in the air intakes placement.

- Locate air intakes in such a place that the general public cannot gain access or provide visual security.
- Provide enough vertical, screened, above-grade inlets that it would not be possible to throw a teargas canister into the inlet.
- Fit air intakes with security bars to prevent unauthorized entry of persons or objects via air ducts.

- Place air intakes to avoid re-entrainment of laboratory exhaust.

TYPICAL LABORATORY FINISHES

Flooring:

Chemically-resistant, heat-welded, homogeneous seamless, vinyl flooring in most laboratory spaces, and epoxy resinous flooring in drying rooms and epoxy terrazzo in autopsy rooms.

Walls:

Paint walls with oil-based paint over gypsum board surfaces and epoxy paint over CMU or concrete surfaces. Provide epoxy resin finish in evidence drying rooms and autopsy. Architects to confirm applied coatings match LEED qualifications and local air quality requirements.

Ceilings:

• In laboratory spaces where there are special containment and pressurization requirements (i.e. BSL3 & autopsy), use hard ceilings constructed of suspended gypsum board systems.

- Use acoustical lay-in ceilings in most laboratory spaces. Lab acoustical ceilings should be similar to Armstrong Ultima with NRC of .7 and reflectance of .9.
- Run ceilings over the top of fume hoods, as the skirt will stop 1" short of ceiling. Provide escutcheon around ducts.
- All exam room ceilings should be gypsum-board for better environmental control.
- In special applications, provide vinyl-coated, lay-in ceilings in laboratories. At labs where vinyl-coated ceilings are needed, use a clean room ceiling, with a high NRC and high light reflectance.

Floor slopes:

- Slope the floor at the projectile recovery tank to the floor sink. Waterproof the entire floor area at the projectile recovery tank.
- All floor drains in autopsy need to have the floor sloped to them. Each drain shall be valve operated flushing floor drains.
- All floor drains need to have the floor sloped to them.
- If is not recommended to have floor drains below safety showers due to the lack of use and drying out or the potential for something harmful leaving the lab through a floor drain.

LABORATORY FIXTURES:

Fixtures Specified:

During design phases, a lab fixture package will be prepared. This package will include emergency shower / eyewash units, deck mounted eyewashes, sink faucets, pure water faucets, UHP lab gas fittings, pedestal housing, overhead retracting cord reels, fume hoods (including exhaust transition sizes) and biological safety cabinets. Specify the following lab fixtures and components:

- Lab sinks and associated fittings in lab counters. Vacuum breakers at all lab faucets are required to be included in the lab spec. The plumbing engineer shall design and specify all related plumbing systems. The engineer is to show the plumbing diagram of the foot pedal faucet arrangement. Specify flip-up, cabinet-mounted foot pedals.
- Emergency shower & eyewash units in lab spaces will be specified. The plumbing engineer shall design and specify all related plumbing systems, including the tempered water system. Only the eye wash drain outlet will be hard plumbed into the building drainage system.
- Deck mounted eyewash units: Drench hose, deck-mounted eyewashes will be specified. The plumbing engineer will need to comply with any code requirements for vacuum breakers at the eyewash units.
- Fume hoods: The fume hood spec for lab areas will be prepared during the design phase. The mechanical engineer must review pertinent sections of this specification, relating to interfacing between the HVAC systems design and the fume hood sash controls, monitors, etc. The engineer will need to advise if occupancy sensors are required. Face velocity monitors will need to be specified by the engineer in their controls specification. Fume hoods will be specified to be pre-plumbed and pre-piped, meaning that only one connection is required for each of the services. Each fume hood could have water, air, vacuum, nitrogen, or argon (per owner's requirements). Skirts will stop 1" short of ceiling and the ceiling is to be continuous overhead with escutcheons around ducts and other penetrations (for pressurization control). Fume hoods will have integral fire suppression systems, which the engineer must tie into the fire alarm system.
- Snorkels in lab spaces will be specified and installed by division 23.
- The purified water fittings and ultra pure gas fittings will be included in the lab spec, but they must be installed per the direction of the plumbing engineer as part of the overall, pure water system and ultra-pure gas system. The complete installation of the ultra pure gas distribution system and purified water system will be designed and specified by the plumbing engineer, including point-of-use water purifier units.

Fixtures Specified by the Plumbing Engineer:

The plumbing engineer will specify all wall-mounted sinks, sinks in non-laboratory casework, hose reels, retractable cord reels, vehicle lifts, water purifiers, and other fixtures.

SITE REQUIREMENTS

Vehicle parking security:

It is recommended that the site design provide for two levels of site security:

- Level 1, unsecured site area: The level 1 unsecured site area, located outside the facility security compound, accommodates general visitor/staff parking and allows these visitors/staff to enter and leave the parking area without security barriers. This shall be located near the main entrance lobby.
- Level 2, monitored site area: Sample delivery and evidence contributor parking will be in a monitored parking area. From this monitored site area, samples and evidence are received, as well as building supplies. Official vehicles may be parked in this area. Install and monitor electronic security devices, such as CCTV or intrusion detection.
- Level 3, secured site area: Staff and Crime Scene Response (CSR) parking will pass through a controlled access gate to this secure site and parking area. From this secured site area, CSR staff has access to dedicated entry points. The level 3 area is secured 24 hours a day, surrounded by a perimeter security fence; it is accessible by use of proximity access devices. Official vehicles may be parked in this area. Install and monitor electronic security devices, such as CCTV or intrusion detection

Site lighting:

Verify site lighting is comparable to that of a college campus offering night classes. Although typically the facility will not be open after normal working hours to the public and portions of the site will be secured with perimeter fencing at the controlled entry, adequate lighting is required in order to deter vandalism and help maintain security.

- Provide excellent lighting to all areas of the site, not just the parking areas.
- Avoid wall washer lighting fixtures, which illuminate the building walls. Instead, direct site lighting to illuminate the ground plane, which surrounds the building and areas of possible intrusion.
- Provide path lighting.

SECTION 3 | Basis of Design

LANDSCAPE

We have placed the building onto the site, located to the South and East of Module 1. A front door public entrance plaza is located to make the entrance easily identifiable. New parking will be added directly South of the solar panels that has been accommodated for future expansion. An expansive service yard located to the East of the building has been defined providing the multiple needs of the user groups while providing for future emergency disaster requirements. A portion of this service yard is fenced off providing access control and storage of equipment. Walls and landscape buffering for the service area is anticipated. An employee courtyard has been created along the North side of the building for gathering, lounging and eating opportunities. An addition to the mechanical room located in the Northeast corner of existing Module 1 building has been added to provide the needs of Module 2. All the existing walking trails have been kept undisturbed and will remain as currently being used.
Landscaping will be kept to a minimum allowing the building to fit into the existing campus design while using local appropriate and water-wise plant types. Screening, buffering and enhancing the pedestrian experience are items that will be designed with the types and uses of landscaping.

Water conservation for landscape use will be a high priority with this project. Specific examples include:

- specifying low-water and/or locally adapted plant material (including new varieties of turf grass)
- separating lawn and plantings on separate irrigation zones
- irrigation control system that can adjust for specific weather-based data such as: solar radiation, relative humidity, wind and temperature
- rain gauge to shut off irrigation system during rainfall
- flow sensor gauge to minimize water waste in the event of a break with an irrigation mainline.

The landscape design will be in keeping with DFCM standards and following requirements; DFCM High Performance Building Rating System, pursue LEED Silver Certification, and meet the requirements of LEED Water Efficiency Credit 1.0: Reduce by 50%. Given the limited amount of landscaping area in the project and existing campus site requests, a 50% reduction may be difficult to achieve, however this will be pursued and confirmed further in the design process. Likewise, Sustainable Sites Credits 5.1 and 5.1 Site Development credits will be explored for potential inclusion in the project.

SECTION 3 | Basis of Design

CIVIL

Site Layout
The CRSA/MWL design team is basing their design efforts on the Option B described in the Programming Report. A new access drive will extend from the looped access road along the south side of the existing building. This access drive will provide emergency & service vehicle access to a sally port, paved parking lot & hardstand area located on the east side of the facility. Personnel & visitor access into the building will be located on the west side of the building & will share the existing entry area with the Module #1 Building. Additional parking stalls will be located as indicated in Schematic Drawings.

Utilities
Sanitary Sewer & Domestic/Fire Water: Taylorsville-Bennion Improvement District (TBID)
1800 West 4700 South
Taylorsville, Utah 84129
www.tbid.org

Fire Protection & Life Safety: Unified Fire Authority (UFA)
3380 South 900 West
Salt Lake City, Utah
www.unifiedfire.org

Storm Drainage:
Taylorsville City Engineering
2600 West 5325 South
Taylorsville, Utah 84129
www.taylorsvilleut.gov

UDOT Region 2
2010 South 2760 West
Salt Lake City, Utah 84104
www.udot.gov

Water/Fire Suppression/Distribution:
An 8" water line loop was built in 2008 as part of the USL Module #1 project. This loop has (2) points of connection to the city's main line beneath 2700 West & loops around the north, east & south side of the existing building. The section of 8" line that runs north to south along the east side of the existing building will need to be relocated further east around the proposed building footprint. New hydrant laterals & fire suppression laterals will extend from this re-routed loop line. This line is anticipated to be 8" C-900 PVC water line with ductile irons gate valves & fittings. Construction details associated with this line will conform to TBID standard drawings & specifications. A TBID inspector will be on site throughout the course of construction ensuring the construction of this line conforms to TBID standards & specifications. The following service lateral sizes are anticipated in the design of this project:

- 4"-6" domestic service lateral – AWWA C-900 07 Polyvinyl Chloride (PVC) Class 150 (DR-18 minimum) pipe. Neptune 4"-6" compound meter with bypass in precast concrete vault.
- 6"-8" fire suppression lateral - AWWA C-900 Polyvinyl Chloride (PVC) Class 200 (DR-14) Pipe
- Hydrants – dry-barrel type with a minimum working pressure of 175 psi (1205 KPa).
- Fittings – ductile iron elbows & tees with resilient wedge screw-type gate valves

Storm Water Conveyance System:
The stormwater conveyance system will collect water from the new building rooftop & surrounding site features & store the required amount of volume in a detention pond on the east side of the site. There is an existing pond in that location that will have to be enlarged. The additional impervious area associated with this project will undoubtedly require additional detention volume to meet Taylorsville City's detention requirement of a 100 year 0.1 CFS/acre discharge rate. Water will be collected in this pond & will pass through an orifice restriction into an existing 60" RCP storm drain line that drains south to north along the east side of the project (adjacent to the I-215 right of way). Pipe networks will be designed to convey a 10 year storm event and maintain a 2.5 FPS scour velocity. Storm drainage system features are defined as follows:

- 10" diameter pipes or smaller (roof drains) – PVC sewer pipe, ASTM D-3034, Type PSM, SDR 35
- 12" to 15" pipes – concrete pipe, ASTM C14, Class 2
- 18" diameter pipes or larger – reinforced concrete pipe, ASTM C76, Class III
- Type I or II precast concrete inlet boxes or junction boxes.

Sanitary Sewer System:
The sanitary sewer system will pick up wastewater effluent from either of the building locations & convey it east to an existing 10" PVC main line that runs north to south on the east side of the building. A portion of this 10" line will need to be re-routed. It appears that there is a 20' wide sanitary sewer easement (10' to either side of the centerline) that lies over the existing sewer line that will also need to be taken into account. Grease waste will flow through grease interceptor & sampling manhole. Sanitary sewer piping will be PVC sewer pipe, ASTM D 3034, Type PSM, SDR 35 (Gravity).

Lab/acid waste will be conveyed through chemical resistant pipe & flow through a dilution tank. This system will be defined as design progresses.

Grading:
The existing grade was elevated beneath the proposed building location as part of the USL Module #1 project. Supplemental fill will need to be imported beneath the east side of the building. The finished floor elevation of Module #2 is anticipated to be 6” higher than the existing Module #1 elevation.

Site grading will conform to industry acceptable standards for flexible pavement & adhere to ADA guidelines:

- No more than 2.00% cross slope through ADA compliant path (or across sidewalk areas)
- No more than 5.00% running slope through ADA compliant path.

Finished grades around the perimeter of the building that are not adjacent to an access point will be depressed 6” & will slope away from the building to conform to IBC 2012 requirements.

Paving:
Site paving will be a combination of asphalt and Portland Cement concrete paving. The employee/visitor & potential service parking lots around the perimeter of the building will be light duty HMA pavement and a heavy duty HMA access drive will extend around the perimeter of the selected building location to facilitate delivery, emergency & waste collection vehicles.

The heavy-duty drive section will be comprised as outlined below.
- 3.5” lift of ½” to ¾” hot-mix asphalt over
- 8” Class 2 aggregate base course (minimum compaction 95% per ASTM-D1557) over
- prepared native subgrade (minimum compaction 90%)

The light duty parking area & trail section will include the elements outlined below.
- 3” lift of ½” hot-mix asphalt over
- 7” Class 2 aggregate base course (minimum compaction 95% per ASTM-D1557) over
- prepared native subgrade (minimum compaction 90%)

NOTE: These hot mix asphalt sections were taken from the geotechnical report issued for USL Module #1.

Any Delivery or Equipment Hardstand areas around the perimeter of the selected building location will be Portland Cement Concrete Paving as follows:
- 6” thick non-reinforced Type V PCC (4500 PSI minimum compressive strength) over
- 8” Class 2 aggregate base course (minimum compaction 95% per ASTM-D1557) over
- prepared native subgrade (minimum compaction 90%)

Sidewalks and concrete will be 5” thick PCC over 6” aggregate base course.

SECTION 3 | Basis of Design

STRUCTURAL

CODES AND STANDARDS

The minimum codes and standards that apply to the design of new buildings include current editions of the following:

- International Building Code (Current Edition 2012)
- American Institute of Steel Construction (AISC) with Commentary
- ACI 318 Building Code Requirements for Reinforced Concrete
- American Iron and Steel Institute (AISI) specifications for the Design of Cold Formed Steel Structural Members
- American Welding Society ANSI/AWS D1.1 Structural Welding codes
- Steel Joist Institute (SJI)
- Steel Deck Institute (SDI)
- DFCM Design Criteria
- As listed in Section 5.

SITE SPECIFIC REQUIREMENTS

The structural systems in the facility are designed to meet specific site driven requirements. Some of these requirements include:

- Soil bearing pressure characteristics based on a site specific. Geotechnical Investigation for the referenced site. (GSH #068-13A-07)
- Wind velocity 115 MPH, (basic wind speed) Exposure C. Internal pressure coefficient 0.18
- Specific roof live load requirements.
- Soil profile characteristics for ground acceleration - used for design.
- Seismic criteria, with soil profile as directed in the Soils Report.
- DFCM Standards.

BASIC DESIGN

The building is anticipated to be a 3-story steel structure with a large penthouse. The floor to floor elevation is typically 16'-0". The anticipated gross square footage is approximately 90,000 square feet.

A major geologic fault was discovered during design of Module 1. The design developed for Module 1 will be incorporated into Module 2 to address these issues.

Foundation:

Based on the soils reports it is assumed that a typical foundation system can be utilized. Such a foundation system consists of continuous strip footings below all exterior walls and braced frames and spot footings under steel columns. The width of the strip footings below braced frames will vary depending upon the final loading but can be assumed to be an average of 14'-0" in width and 48" deep. The spot footings under columns will be on average 10'-0" x 10'-0" x 26" thick. Footings can be placed on upon a minimum of 24" engineered structural fill extending down to the suitable natural soils. At large strip footings below braced frames; fill depths fill depths of 36" may be required.

- Recommended net bearing pressures will be approximately 3,000 psf for footings. A 50% increase in bearing pressure will be permitted for short term loading such as wind and seismic.

Ground Floor:

Ground floor of the structure will have a slab-on-grade floor. The slab-on-grade is designed to satisfy the characteristics of the geotechnical report for the given site. The typical slab on grade will be an unreinforced 6" thick slab.

A few spaces within the may have loads as high as 4,000 pounds per square foot that will require significant structural support. Slabs in these areas will be 12 to 16 inches thick and should have two layers of reinforcing of #6 bars at 12" on center each way. Because of the substantial construction required, these loading criteria should be confirmed and the location of the loads determined.

Floor Framing:

The general framing system consists of steel wide-flange composite beams supporting a 3" steel deck. The typical deck span is 8' +/- to maximize the deck's efficiency and economy. The girders will typically span 33' +/- in the lab to increase space flexibility.

The typical slab will be 3 1/2" of normal weight concrete over the metal deck to support the lab loads as well as help in dampening vibrations.

Beams will have minimal camber, and where camber is used, it will be limited to 75% of the DL deflection. Nominal reinforcing has been provided directly over the grid line beams to assist in crack mitigation.

In order to promote a flexible laboratory environment, the floor has been designed to meet strict vibration criteria. The floor framing is designed to control vibrations following the recommendations from AISC Design Guide 11, Floor Vibrations Due to Human Activity. In all laboratory locations vibration is held at or below 4,000 micro inches per second. This performance is further assured by conducting the analysis with a walking speed of 75 steps/min (as compared to a standard 50 steps/min) throughout the laboratory and circulation areas. The office portion has been designed to typical Class-A standards.

Column spacing is an excellent way to control deflection, vibration and building costs. In general the column spacing respects typical parameters and not overly penalize the steel budget. It is anticipated that the column spacing will be approximately 22'x 33' maximum. Spacings in excess of this require a substantial amount of added structure to achieve the desired vibration performance. In the laboratory areas, the typical girder is a W27x84 and a typical beam is a W24x55. At the 22'x22' bays, the girders are W24x55 and beams are W18x35. We estimate an

approximate steel weight of 15 psf for the primary structure based on square footage of deck area.

Steel Roof Framing:
Roof framing is accomplished with a combination of open-web steel joists and steel wide-flange beams. At the roof top mechanical areas, composite wide-flange steel beams have been used with concrete over 3" metal deck. This will simplify any fireproofing requirements and provide a clean surface from which to suspend HVAC loads. Accommodations for concrete housekeeping pads have been provided below mechanical equipment.

Wall Systems:
The typical exterior wall system will be non-structural in design and not be required to support any vertical or lateral loads of the building. Such wall systems will require the design of a specialty contractor to resist deflections that are a result of wind, seismic and other system loads. They will also be designed and detailed by the specialty contractor to accommodate vertical and seismic (lateral) drift.

LATERAL LOADING CRITERIA
Lateral Force Resisting System:
Typically, seismic loads will govern a building design of this type. This will be true for both principle axes of design. However, it is important that the various elements of the structure be properly designed to resist the prevailing wind loads. These elements may include overhangs, roof projections, exterior cladding systems, window mullions, etc.

Seismic loads enter a building by way of ground accelerations. These ground accelerations are resisted and absorbed by the lateral force resisting system and other components of the structure. Several different types of structural systems can satisfy these lateral force requirements. Diagonal braced frames (BRBF) are an efficient way to resist lateral loads. Steel moment frames are much less restrictive but carry a significantly higher construction cost. A combination of these systems should be investigated to incorporate potential benefits of each system. Lateral elements should always stack vertically from the top level to the foundation system.

Steel Braced Fames, (BRBF) Buckling Restrained Braced Frames:
Braced frame locations will be in areas where they have minimal impact of the architectural characteristics of the building. These lines may be located along core areas, mechanical room walls or stair towers. In all cases the braced frames must stack from the roof level to the foundation. The most efficient locations for braced frames are around the perimeter of the building. These may interfere with the architectural fabric and be forced to be in less than optimal locations. As locations for braced frames become more and more inefficient (due to location) the costs rapidly approach that of a moment frame.

Steel Moment Frame:
It may not be possible (visually) to locate acceptable locations for braced frames. As an alternative steel moment frames can be utilized. Moment frames work much better and are more cost effective if they are located at the perimeter of the structure.

STRUCTURAL DESIGN CRITERIA AND MATERIAL STRENGTHS

1. Governing Building Code: IBC 2012 Edition

2. Floor Live Loads
   a. Offices + Partitions 80 psf + 20 psf
   b. Lobbies and Main Floor Corridors 100 psf
   c. Corridors Above Main Floor 80 psf
   d. Laboratory Areas 125 psf
   e. Mechanical Rooms/Penthouse Floor 150 psf

3. Roof Snow Load: 30psf

4. Wind Load
   a. Basic Wind Speed 115 mph
   b. Wind Exposure C
   c. Internal Pressure Coefficient 0.18

5. Earthquake Design Criteria
   5.1 Mapped Spectral Response Accelerations
      a. Short Period Acceleration SS = 1.476
      b. 1-Second Acceleration S1 = 0.490
   5.2 Spectral Response Coefficients
      a. Short Period Acceleration SDS = 0.984
      b. 1-Second Acceleration SD1 = 0.493
   5.3 Site Class (Soil Profile) D
   5.4 Seismic Importance Factor 1.0
   5.5 Seismic Design Category D
   5.6 Effective Weight of Structure W
   5.7 Basic Seismic Force Resisting System BRBF
   5.8 Response Modification Coefficient R = 8
   5.9 System Overstrength Factor $\Omega_0 = 3$
   5.10 Deflection Amplification Factor $C_d = 5.5$
   5.11 Design Base Shear V = Cs*W
   5.12 Analysis Procedure Modal Response Spectrum

Preliminary Material Strengths

Concrete (28 day)

Footings and Walls: f'c=4,000 psi
Interior Slabs on Grade : f'c=4,000 psi
NWC On Metal Deck: f'c=3,500 psi

Steel

Wide Flange: ASTM A992 (50 ksi)
Hollow Structural Shapes: ASTM A500
Grade B (42 ksi) and C (46 ksi)
Reinforcing Steel: fy=60,000 psi

SECTION 3 | Basis of Design

MECHANICAL

General:
The Unified Laboratory Module 2 is approximately 90,000 sf of laboratory space for the State Medical Examiner, Crime Lab and Agriculture Lab. The building is anticipated to be a 3 story building with a mechanical penthouse and a separate level 1 boiler and chiller room next to the existing boiler and chiller room..

The project is an addition to the existing Unified Lab module 1. Several mechanical systems will be shared between the new and existing buildings.

Mechanical items that will be shared with the new building will include the following:
Utilities
- Domestic water service connection
- Natural gas connection

HVAC & Plumbing
- Soft water systems
- Pure water generation system
- Lab vacuum system
- Lab air system
- Indoor condenser water sump.
- Building BAS - DDC energy management system front end.

This project will include all Mechanical systems and components including the following:
Utilities
- Extension of the existing domestic water service
- Extension of the existing natural gas service.
- Sanitary sewer connection
- Storm drainage connection
- New fire line connection

HVAC & Plumbing
- Augmentation and extension of the pure water generation system
- Augmentation and extension of the lab vacuum system.
- Augmentation and extension of the lab air system
- Acid waste piping system
- Extension of the lab gas piping system
- Garage shop compressed air system (to be determined)
- VAV Air Handling and air distribution systems
- VAV Manifolded Lab exhaust system
- Dedicated exhaust systems (as required)
- Laminar flow gun range air system with bag-in/bag-out hepa filtered exhaust
- Exhaust energy heat recovery
- Three stage evaporative cooling systems
- Chilled water systems
- Condenser water and heat rejection systems
- Hot water heating systems
- VAV & constant volume terminal units
- Computer room and other specialized space conditioning systems
- Augmentation and extension of the existing building BAS- DDC energy management system

Sound Criteria
The following sound criteria will be used for the design of mechanical systems:
- Open Offices: NC35
- Laboratories: NC35
- Private Offices NC30
- Conference Rooms NC30

Design Parameters
The following Design Standards including those listed in the SFO will apply to this project:
- ANSI Standards
- ARS Facilities Design Standards
- ASHRAE Handbooks
- ASHRAE 90.1-2010; Energy Standard for Buildings
- Industrial Ventilation Manual of Recommended Practice
- International Building Code 2012
- International Plumbing Code 2012
- International Mechanical Code 2012
- International Fire Code 2012
- International Fuel Gas Code 2012
- NFPA Standards
- SMACNA Duct Design, Third edition,
- SMACNA HVAC Duct Construction Standards, Metal and Flexible,

Design Temperatures:
The following design temperatures and conditions will be used to design systems and select equipment for this project:

	Winter	Summer
Outdoors	0^0F db	97.7^0F db /62.8^0F wb (ASHRAE 0.4%)
Indoors	72^0F db $\pm$ 2^0F 10-30% RH	72^0F db $\pm$ 2^0F 30%-50% RH
Evaporative Cooling		66.3^0F wb /88.1^0F db (ASHRAE 0.4%)

Interior Heat Loads
To be determined during the design phase. Generally the systems will be designed on the following where specific information is not available:

Lighting:	1.0 watts s.f.
Equipment, laboratories:	12 watts s.f.
Equipment offices:	1.5 watts s.f.

Ventilation for occupants will be 20 cfm per person except where ASHRAE Standard 62 has a greater requirement. Restroom ventilation will be in accordance with the International Mechanical Code with a minimum of 2 cfm exhaust per square foot of area. Fume hood face velocities, in general, will be designed at 100 fpm at 18" sash opening.

Minimum air flow rates shall be as following:

General laboratories:	6 Air Changes Per Hour (ACH) when occupied 4 ACH unoccupied Specific rooms will be targeted to reduce to 2 ACH when unoccupied.
Evidence Storage:	15-18 ACH at all times
Autopsy:	15-18 ACH at all times
Decomposition:	18-20 ACH at all times

An Aircuity air quality sensing system will be investigated to possibly help reduced these minimum air flow rates.

Temperature Control Zoning:

Exterior zones:	500 occupiable sf. max
Interior open office zones:	2,000 occupiable sf. max
Walled offices:	Maximum of three offices with the same exposure and internal loads (people and equipment)
Meeting/Conference Rooms:	Separate zones
Print/Special Use Rooms:	Separate zones
Laboratories:	Separate Zones
Computer/Telecomm Server Rooms:	Dedicated equipment

HVAC Systems
Refer to equipment schedules for estimated equipment sizes and capacities. Actual capacity requirements will be determined as the design progresses.

Central Plant:
Heating water will be supplied from thee natural gas-fired, condensing hot water boilers, two sized for 40% each and one for 20% of the building load.

The boiler load is being estimated, for the schematic phase, at 6,000,000 BTUH for the two larger boilers and 3,000,000 for the smaller.

The heating water will combined with the existing plant piping to utilize the smaller condensing boilers under low load conditions and provide additional redundancy. Building reheat temperatures will be lowered under low load to take advantage of the condensing ability and high efficiency of the new condensing boilers.

One steam boiler shall be installed to provide the steam process load for glass wash and sterilization requirements.

Chilled water shall be supplied from two chillers. One sized for 70% and the other 30% of the building cooling load. The larger chiller will be a hermetic electric motor driven centrifugal chiller with VFD. The smaller chiller will be an oil free, magnetic bearing, dual circuit, multiple centrifugal compressor chiller with VFD, capable of running under 0% load.

The chiller load is being estimated, for the schematic phase, at 500 tons for the larger chiller and 200 tons for the smaller.

The chilled water system will be combined with the existing plant piping to utilize the smaller chiller under low load conditions.

An existing indoor condenser water sump has been sized for future cooling tower needs and will be utilized for a new cooling tower.

Two counter flow cooling towers will be used to reject building heat. All wetted surfaces of the towers will be stainless steel.

Cooling tower water will be utilized for indirect evaporative cooling of air handler cooling coils.

Variable flow pumping shall be used for chilled water, condenser water and building heating hot water.

The Central Plant will be an extension of the existing central plant, being adjacent to the East of the existing plant. A separate chiller room will be utilized to separate chillers from the boilers. Connections to the existing chilled water primary and secondary loops and hot water primary and secondary loops will be provided. Connections to the existing plant will provide redundancy in equipment and economies of scale.

The plant will also house new industrial water heaters.

Air Handlers:
The supply air handlers will be custom manufactured with multiple plenum fans, chilled water cooling coils, air washers with bypass dampers, indirect precooling coils, glycol solution pre-heating coils, pre- filters, final filters, outside air intake dampers, return dampers and heat recovery coils. The air handlers shall be double wall construction with 4-inch thick walls. The internal liner upstream of the air washer section will be perforated galvanized metal. Downstream of the air washer, the liner will be solid galvanized steel. Air handler air tunnel will be sized for 400 fpm coil face velocity to reduce static pressure losses.

Four stages of cooling will utilized to provide cooling for both the office and lab spaces in this building. The first stage of cooling will be the heat recovery coils. The second stage will utilize the direct evaporative air washers. The third stage will utilize the cooling tower by using the pre-cool coils. The final stage will be provided by the chiller to the chiller water coils. With this arrangement, the chiller will only need to operate for a few weeks each year.

No humidity control will be provided in the building.

Exhaust air handlers will be provided with the same construction as the supply air handlers. Heat recovery coils with prefilters will be provided in the exhaust air handlers to recover building energy.

Two supply air handlers will serve the laboratory and office spaces. Each unit will be sized at 50%. These units will be connected into a common plenum and use 100% outdoor air at all ambient condition.

Two exhaust air handlers will serve the laboratory and office spaces. Each unit will be sized at 50%.

Air handlers are being estimated at the schematic phase as having 180,000 cfm capacity for supply air and 180,000 CFM for exhaust air.

Air Distribution:
Air will be distributed to spaces through insulation-wrapped, medium-pressure duct systems to the inlet of variable air volume (VAV) terminal units with insulation-lined, low-pressure distribution duct on the outlet side leading to ceiling-mounted air diffusers. In the lab area, diffusers shall be displacement type to limit air velocities near the hoods to 50 FPM. A Ceiling return air plenum will be used in the offices spaces. All air supplied to the lab spaces will be exhausted.

Laboratory Supply and Exhaust:
Variable volume Phoenix valves will be used to control the supply and exhaust rate in the labs. Phoenix supply air valves with reheat coils will be used. A general exhaust valve will be controlled in conjunction with the supply valve and hood valve to maintain lab temperature, minimum air change rates and room pressurization.

The laboratory fume hoods will need to be variable volume type. The exhaust from each hood will be controlled by a Phoenix variable volume exhaust valve. The Phoenix control system will maintain constant 100 FPM face velocity with any sash opening from closed to 18 inches open. A proximity sensor will be used to reduce the face velocity to approximately 60 FPM when no users are near the hood. An alarm system will be provide at each hood and will be connected to the Building Automation System. These hoods will be connected to a manifolded exhaust duct system.

The laboratory hood exhaust fans shall be constructed from steel with an acid resistant baked phenolic (Heresite) coating on all surfaces. Four fans will be provided, each sized at 30% to provide some redundancy in the event of failure of either fan. Each fan will be installed inside an exterior air handling unit housing with a heat recovery coil and upstream filters. A VFD will be used to control the fan speed to maintain the required exhaust manifold pressure. An auxiliary intake damper at the fan will be provided to maintain stack velocities. The heat recovery coils will an acid resistant baked phenolic coating on all parts exposed to the exhaust air stream. Dampers will be provide to isolate each fan and system component to allow service while the remaining components are operational. The inside and outside of the stack shall also be coated.

The main exhaust ductwork risers and main runs shall be constructed of galvanized sheet metal. Exhaust ducts form hoods and other specialized exhausts shall be constructed of welded 304 stainless steel.

Gun Range Air System:
The gun range shall be separately exhausted from the rest of the building. The Supply air will be delivered in a laminar fashion behind the shooter and travel to the target end of the ranges. Exhaust shall be picked up at the target end and shall ducted separately to HEPA filters on the roof with bag-in/bag-out filters to remove lead contamination. The laminar flow design will provide user safety from lead contamination. Design air flow will be based on a minimum of 75 fpm.

Computer Rooms:
Liebert computer room air units with air cooled condensers will be used to cool the Data Rooms. Each unit will have humidification, air filtration, smoke detection and will be on emergency power. Each Data Room will also be served by the central air system to provide cooling for half the anticipated load and will be the first stage of cooling.

Perimeter Radiation:
All exterior offices and labs will be provided with perimeter ceiling radiation panels. Control for these panels will be zoned to terminal box zones.

Controls:
The Building Automation System (BAS) with graphics will be provided. The system will be an extension of the existing Atkinson Staefa controls system. All air-handling units, chillers, cooling towers, boilers, pumps and all VAV and FPVAV terminal units will have Direct Digital Controllers (DDC), and will be tied to the central monitoring and control computer. Any miscellaneous heating or cooling equipment will have self-contained controls. This system will provide control and monitoring for all key system components including the future VAV terminal units. Capacity for a 25 percent expansion of control/monitoring points will be provided.

Plumbing Systems:

Domestic Hot and Cold Water:

Domestic hot and cold water system will be connected to non-laboratory plumbing fixtures only. Exception, all eye washes and emergency showers will be connected to the domestic cold water and domestic hot water and tempered to 80°F.

Domestic hot water will be generated from gas fired hot water heaters and storage tanks. Design hot water temperature will be maintained through a water recirculating system.

Industrial Water Systems:

Industrial water systems will be connected to the domestic water system through an approved reduced pressure type backflow preventer. The industrial water system will be connected to all fixtures and equipment required in laboratories. Vacuum breakers will be provided on water source connection outside of each fume hood.

Industrial hot water for laboratory fixtures and equipment will be supplied from gas fired hot water heaters and storage tanks. Hot water temperature will be maintained through a water recirculating system.

Soft Water:

Soft water will be provided from the existing building system.

Pure Water Systems:

Reverse Osmosis (RO) deionized system will be provided from the existing pure water system with the addition of a second RO generation unit. The DI water will be circulate throughout the building to the various laboratory locations and back from the laboratories to the RO storage tanks. Recirculation is provided to prevent pure water quality degradation due to water standing in the piping system. Point of use polishers such as Deionizers and Distillers will be provided at locations where a higher quality of water is required. These exact locations will need to be identified at the design stage.

Laboratory Compressed Air:

Compressed air will be supplied from the existing rotary screw air compressors and storage tank. An additional compressor will be added to the existing triplex unit. Air piped to the lab areas will be of instrument quality. Compressed air shall be provided at 100 psig at shafts with a regulator to reduce at each floor down to 15 psi (adjustable). All air to laboratories shall be instrument grade, generated in compressors, filtered to remove hydrocarbons and particles and dried.

Laboratory Vacuum System:

Laboratory Vacuum will be provided from the existing rotary vane vacuum pump system with receiver. An additional vacuum pump will be added to the existing triplex unit. Vacuum will be provided at 15" HG minimum to the outlets in laboratories and support areas.

Shop air (if required):

A lubricated shop air system will be provided for the garage for running of tools.

Sanitary Sewer and Waste System:

A complete sanitary waste and vent system will be provided in accordance with IPC throughout the building. System will be connected to the sewer main.

Laboratory Waste System:

A complete acid resistant laboratory waste and vent system will be installed throughout the building. A dilution tank will be provided to dilute any chemical waste that may be dumped down the acid waste system. The acid waste system will then tie back into the sanitary waste system with a sampling manhole.

SECTION 3 | Basis of Design

ELECTRICAL

Codes and Standards

Codes which are applicable to the design of the electrical systems are listed below. Comply with each of the latest adopted publications.

- ASHRAE 90.1 Energy Code
- DFCM, Division of Facilities Construction and Management, Design Criteria
- EIA/TIA, Electronics Industries Association/Telecommunications Industry Association
- IBC, International Building Code
- IESNA, Illuminating Engineering Society of North America
- NFPA, National Fire Protection Association (applicable sections including but not limited to):
    - NFPA 70, National Electrical Code
    - NFPA 72, National Fire Alarm Code
    - UL, Underwriter's Laboratories
    - Utah State Fire Marshal Laws, Rules and Regulations

Electrical Design Objective:
The electrical systems design will concentrate on the following objectives: energy efficiency, compliance with all applicable codes and standards, fulfillment of the electrical functional requirements of the project, allow for future expansion and flexibility, and provide systems that will be easily maintainable.

Electrical Site Utility Systems:
The serving electrical utility company will be Rocky Mountain Power (RMP). A new (2nd) transformer will be required. The routing of the utility primary and pad mounted transformer will be coordinate with RMP during the design development phase of the project. Primary conduit and trenching will be provided under this contract. Metering enclosure, secondary conduit, conductors, trenching and concrete transformer pads will be provided under this contract. Meter, totalizing equipment, primary feeder conductors and pad mounted transformer will be provided by RMP.

The site telecommunications infrastructure will include conduits to the existing Module 1 and conduits run to the property line for service from additional telecommunications service providers. Four 4" conduits will be provided from the MDF to an existing manhole at Module 1, and two 4" conduits will be provided to the property line or nearest manhole.

Exact routes and requirements of each serving utility will be coordinated with the utilities and indicated on the final construction documents.

Normal Power Distribution:
Power will be distributed throughout the facility from a 277/480V -3Ph-4W service entrance. The estimated service size for this building is 2,500 amps. This will be verified as the design progresses. The main 277/480V service switchboard and the main 120/208V distribution switchboard will be located in a new main electrical room of Module 2. In general lighting, HVAC equipment, miscellaneous motors and heating loads will be served at 277/480V. General purpose receptacles and lab equipment will be served from 120/208V-3Ph-4W panelboards via dry type transformers. Transformers will be NEMA TP1 compliant.

In addition to the utility meter, sub-metering will be provided at the main service and at each 120/208V distribution board. This will be a valuable information source for future work to determine if distribution points have sufficient capacity for modifications that will require more load capacity. Metering shall be digital type with demand and energy functions. Where practical, interfacing the meters with the building management system will be considered.

Distribution panels and power panels will be circuit breaker-type and will be sized to accommodate the actual load as well as a projected additional 25% spare capacity, unless noted otherwise. Lighting and power panels will be commercial-type with bolt-on circuit breakers. In general, Molded-case breakers will be used. Each panel will have a hinged door with a master-keyed flush tumbler latch. Selected panels will also have hinged trim to allow entire front cover to swing open for easy maintenance. In general, overcurrent protection devices will be selectively coordinated with supply side overcurrent protective devices. Circuit breakers will be fully rated except that series rated devices may be considered/limited to branch breakers and an upstream main within the same panel or switchboard. Bussing will be aluminum or copper. Distribution and branch panels will be located in stacked electrical closets. Branch panels serving specific labs will be located recessed in the walls of the lab space.

Transformers will be provided to convert 480-volt power to 208Y/120 volts for receptacle, and equipment needs. Transformers will be standard high efficiency, NEMA STP TP1 dry-type rated for 150° C rise. Windings will be copper or aluminum. K-rated transformers will be utilized in areas where loads predominately consist of "non-linear" loads. Transformers rated 75 kVA or smaller may be wall or floor-mounted. Transformers rated 112.5 kVA or greater will be floor-mounted. Transformers will be located to keep maximum feeder length from the transformer to the 120-volt panels from exceeding 200 feet in order to keep the neutral to ground voltage differential at workstations and equipment within acceptable limits.

Surge protective devices (SPD's) and noise protection will be provided at service equipment and on the load side of each step-down transformer in the facility. SPD units may be integral to the panelboard or switchboard, or individually mounted Astand-alone@ units. However, if individual units are used, they shall be placed immediately adjacent to the panelboard or switchboard to minimize the effects of increasing clamping voltages due to excessive lead lengths.

Wiring devices will be 20-ampere minimum, and color as selected. In general, device plates will be hi-impact nylon. Stainless-steel plates will be used in selected areas. Receptacles will be provided in accordance with the program requirements. Each office shall have at a minimum a single duplex receptacle on each wall, coordinated with office furniture locations. Corridor receptacles shall be placed every forty feet on center. Restrooms shall each have a single GFCI receptacle. Storage rooms shall have at a minimum a single duplex receptacle placed near the door. Lab counter tops shall have

at a minimum a duplex receptacle mounted within wireway every twelve inches, alternating between normal power and standby power throughout the length of the wireway with a maximum of three receptacles per circuit.

Each lab shall be served by a dedicated panel with an isolated ground bus for both normal power and standby power and shall be sized to accommodate the actual load as well as a projected additional 25% spare capacity.

Disconnect switches will be heavy-duty type. Exterior switches will be rain-tight. Disconnect switches for packaged HVAC equipment will be fusible.

HVAC equipment will be controlled by VFD's, individual motor starters and motor starters mounted in motor control centers as determined by the mechanical division. VFD's shall include factory-mounted harmonic filtering within the enclosure to limit the total input current harmonic distortion to 15% or less. Each magnetic motor starter will include a hand-off-auto (H-O-A) switch, auxiliary contacts, a control power transformer, and a motor running pilot light. Each starter will have a minimum inrush rating of 140% of that for a standard motor to meet the NEC requirement for use with energy efficient motors.

For groups of 3 or more motors, motor control centers will be provided. Motor control centers may be provided for each major mechanical space. Motor control centers will be Class 1, Type B with motor circuit protectors. Bussing will be copper. Components will be rated for AIC. Starters will incorporate the features described above.

Refer to the program equipment summary and space plan sheets for equipment requiring electrical rough-in and connections. All equipment and furniture identified in the program documents, whether it is furnished in this contract or a separate contract, shall be provided with power and raceway rough-in for complete operation. Coordinate furniture connections with furniture systems suppliers.

Branch circuits shall be loaded to no more than 80% of what is allowed by NFPA 70. Where outlets are intended for a specific piece of equipment, the load of the outlet shall be based on the equipment nameplate. Otherwise, allow no more than 6 convenience outlets per circuit or 3 outlets per circuit serving workstation computer terminals and lab equipment. Outlets with dedicated branch circuits (one outlet per circuit) are required for vending machines, copy machines, break room counters, A/V cabinets, lab equipment and other locations likely to have equipment requiring dedicated circuits. Each branch circuit homerun shall have no more than 3 circuits per raceway. All 120V branch circuits shall be provided with an oversized neutral.

The electrical power distribution system will be grounded in accordance with the NEC. The ground bus at the main service equipment will be connected to the water service, a concrete-encased electrode, building perimeter ground ring, and building steel. The grounding system will be installed in strict accordance with NEC article 250. All transformers will have the neutral of the derived system bonded to building steel, the nearest metal water pipe, and the transformer case. An insulated equipment grounding conductor will be installed with feeders and branch circuits. Metal raceways, boxes, equipment, receptacles, and light fixtures will be bonded to the equipment grounding system. Provide a grounding riser system throughout the telecommunications closets, with grounding bus bars mounted accessible in each closet. All grounding systems shall be bonded together per NEC requirements.

All conductors shall be copper. Conductors for branch circuits shall be minimum size of # 12 and sized to prevent voltage drop exceeding 3% at the farthest load. The total voltage drop on both feeders and branch circuits shall not exceed 5%. When calculating the voltage drop, the load shall be assumed to be 80% of the ampacity of the branch circuit and feeder conductors. Insulation will be THWN or XHHW rated for 90° C; however, design will be based on 75° C ratings. Four-wire feeders, where neutral is considered a current-carrying conductor, will have an additional 80% derating. All conductors, including neutrals and grounding conductors, will be color-coded.

All wiring will be in raceways, minimum ¾" C for power and minimum 1" C for communications. Rigid galvanized steel (RGS) conduit or intermediate metal conduit (IMC) will be used for exposed exterior work where subject to damage. Type MC or AC cable is strictly prohibited. A cable tray system will be provided such that station cable raceways do not extend more than 50' max to cable tray. Conduits shall stub all the way to the cable tray. Include pull strings in all empty conduits. Include raceway for all audio/visual and technology systems whether furnished as part of the construction contract or furnished by the Owner.

Special Considerations for BSL-3 Areas: All conduit shall be threaded rigid metal and boxes shall be cast metal type. Cover plates shall be gasketed and sealed. Conduits shall be internally sealed and caulked at each box once wires are installed. Conduits passing through wall shall be sealed and caulked around the outside.

A fault current and coordination study shall be performed by a licensed electrical engineer to indicate available fault current at all points in the 15 kV and Building distribution systems. New equipment will be adequately rated for the amount of available fault current. System coordination shall be studied, and fuses or breakers selected to ensure minimum system outage due to overloads or fault currents. Breakers with adjustable long time, short time, instantaneous and/or ground fault settings shall be set at levels for optimum system coordination.

Emergency Power Distribution:

For Phase 2, a 2nd 750 kW outdoor diesel-driven generator will be added and will be stand-alone serving only Module 2 (it will NOT be paralleled with the existing 750 kW generator of Module 1). This will provide the emergency power for egress and exit lighting. It will also include standby power for selected areas and equipment as directed by the owner to include but not limited to: computer systems, telephone equipment, selected refrigeration equipment, selected lab equipment and any other items directed by owner. Automatic transfer switches shall be provided for Legally Required Standby and Optional Standby loads.

The fuel tank will be skid-mounted, dual-wall in accordance with EPA guidelines and sized for a capacity of 24 hours of fuel consumption at 100% load.

The emergency systems will be designed in accordance with the NEC. The emergency system will be divided into at least two branches: Life Safety Branch with integral battery back up as

well as both Legally Required Standby and Optional Standby branches both on generator back up. A third branch is proposed for lower priority loads that can be added to the generator system when capacity is available, and shed when capacity is not available.

In general, emergency loads will be served from the emergency branches indicated in the following paragraphs:

The Life Safety Branch will consist of loads including egress lighting and exit signs, Fire Alarm, Security, IT, and automatic doors required for egress. All of these systems will also be provided with an integral battery system as required when generator power is not available.

The Legally Required Standby Branch will serve the loads that when power is interrupted could create hazards or hamper rescue or fire-fighting operations.

The Optional Standby Branch will serve additional owner requested systems and equipment desired to be on generator back up. Lab counter tops shall have at a minimum a duplex receptacle mounted within wireway every twelve inches, alternating between normal power and standby power throughout the length of the wireway with a maximum of three receptacles per circuit. Wiring devices on emergency circuits will be red in color. Coverplates will be engraved with the with ¼" white letters to read, "EMERGENCY".

Each lab shall be served by a dedicated panel with an isolated ground bus for both normal power and standby power and shall be sized to accommodate the actual load as well as a projected additional 25% spare capacity.

Uninterruptible Power Supply:
A new UPS system is proposed, since distances are too great to tie into the UPS of Module 1. The size of the UPS is not determined as load information is not yet available (for cost purposes, assume a UPS size of 150 kW). This will be coordinated as design progresses and more equipment load information is available. The following loads shall be included on the UPS system:

- Phoenix control systems (serving fume hoods and lab exhaust systems)
- Critical Lab Equipment, as designated by the user
- Data closets

Lighting:
Energy efficient luminaires will be provided throughout the facility. Closed and open office and like areas will be provided with high efficient, low glare fixtures. Lab areas will be provided with pendant mounted direct/indirect lighting fixtures. LED sources will be considered to the extent practical.

- Storage and unfinished areas will be provided with 2' x 4' standard lensed troffers or industrial type fixtures.
- Specialty luminaires will be provided as necessary in areas such as lobbies, entries and conference rooms.
- Display lighting will be provided for special artifact areas.

Lighting will be controlled via a low-voltage networked lighting control system. In general, occupancy sensors will be used throughout. Perimeter lighting in day lit areas will be controlled by photo sensors.

All required egress and exit lighting will be connected to the emergency generator. LED exit signs will be used for exit signage.

The lighting system design will consider occupant needs, visual tasks to be performed, the desired appearance of the respective space, infection control and energy/economic constraints. The lighting design will consider the Recommended Practices of the IES North America and energy codes.

Design illumination levels as noted in the program will be used for the basis of design for interior illumination levels. Lighting fixture selection will consider visual comfort, appearance and energy efficient lamp and ballast sources.

Energy efficient luminaires will be provided throughout the majority of the facility. In general, T8 and T5 fluorescent lamp sources with electronic low THD ballasts will be used with T8 lighting being preferred.

Adjustable dimmed downlights will be used in rooms where additional light function is required.

Lighting in non occupied spaces will be controlled via occupancy sensors where applicable. Separate controls will be provided for day-lit areas. Photocell control with dimming ballasts will be considered for perimeter areas where substantial day-lighting is available. As a minimum, bi-level switching will be utilized for local control. All other lighting will be controlled via local switching. Lighting control systems shall be provided with local support for maintenance and programming.

HID pole mounted site lighting fixtures (maximum of 30') and building mounted luminaires at entrances and other appropriate locations along the building will be selected with attention given to dark sky sensitivity. Bollards may be added along the circulation path if required. Any areas/features that require high lighting will utilize metal halide directional fixtures. Exterior lighting will be photocell/time clock controlled.

Lightning Protection:
A complete concealed lightning protection system will be provided. The system will have master label approval. Down conductors will be run in raceways concealed in the building structure. Detailed installation drawings will be provided by the system supplier.

Fire Alarm System:
The facility will be provided with an intelligent microprocessor-based, addressable fire alarm system complete with addressable control relays. The manufacturer should match that of Module 1 if possible, for integration and compatibility, however, the Module 1 and Module 2 fire alarm systems shall not be tied together. The system will have sensitivity monitoring and adjustment of all smoke detectors.

Addressable manual stations will be provided at each exit from the building and no more than 200 feet from any part of the building. Smoke detectors will be provided for elevator capture, HVAC system control, paths of egress, and other areas required by code.

Audible/visual evacuation signals will be visible in the evacuation path. Signals will be located no more than 15 feet from exit doors and no more than 80 feet on center in corridors. Signals will also be installed in toilets and common use areas. An additional signal will be located on the exterior of the building.

Audible evacuation signals will be horns. Visual signals will be strobes meeting ADA requirements. Small rooms will be equipped with mini strobes. Signals will be combined audible/visual assemblies, unless otherwise indicated.

HVAC systems will be provided with duct detectors as required by code. Relays will be provided to shut down each air handling unit in response to an alarm generated by its associated detector. Smoke dampers will be wired to dedicated 120-volt circuits from emergency panels. Circuits will be controlled by the fire alarm panel so damper close upon smoke detection at the serving air handling unit or in the space served.

Fire sprinkler system will be monitored for flow and valve position. The fire pump controller will be monitored for power availability, pump run status, and trouble conditions. All fire alarm wiring will be installed in raceways.

Security System:
A door entry control system and CCTV monitoring is planned. Card readers, door control, door monitoring, motion detection, cameras and other required security equipment will be provided at the following locations: selected exterior doors, Main Staff Entrance as well as locations directed by the owner and per the program. A Closed Circuit TV System will be provided for monitoring of selected areas and doors. Cameras will include motion detection activation feature. The extent at which Module 1 and Module 2 is tied together is yet to be determined and shall be coordinated with DFCM and the user groups as the design progresses.

Voice/Data and Communications System:
The voice/data cabling and equipment will be designed and installed under the direction of the DFCM IT department. The repsonsibility of the electrical division will be to provide an empty raceway system for the installation of cabling by others.

Stacked telecommunications closets will be provided to serve each floor of the building. Coordinate equipment layout and wall space with DFCM. Closets are located such that when cabling is routed through the raceway system provided, the distance will not exceed 290 feet to the furthest outlet. Provide a minimum of four 4" conduits from the MDF to the stacked IDF locations and four 4" sleeves between floors. If possible, stack the MDF below the IDF=s. Provide both normal and emergency circuits to each IDF, 3 each, with one fourplex per circuit. Twenty-four hour HVAC is required in each closet and shall be supplied with emergency power.

Horizontal Distribution: Provide a cable tray distribution network throughout each floor and into the IDF closets. Extend the cable tray around inside of the IDF closet to allow cables to be routed within the room. Consider ease of access to the tray system when the building is in full operation. Limit cable tray routing to be above corridors, common and similar areas. Where ceilings are exposed or inaccessible, then provide a bridge of equivalent conduit connecting the cable trays in the accessible ceiling areas. Do not load the cable tray and raceway system to more than 50% of what is allowed by cable fill requirements of NFPA 70.

Voice/Data Drops: Each voice/data outlet location shall consist of a 4" square box with mud ring and one 1@ conduit stubbed to the nearest cable tray. Locations will be coordinated with the users during design. As a minimum, provide one voice/data drop for each workstation, fax machine, copy machine, desk, computer terminal and lab bench. Where wireless networks are being considered, still allow sufficient empty raceways for future hardwired connections should the wireless system have insufficient bandwidth for evolving applications.

Audio Visual (AV) Systems:
AV systems will be provided in large conference rooms and consist of projects with screens, or monitors, signal inputs and sound reinforcement, if required by rooms size. Exact AV requirements are still in development.

SECTION 4 | Code Summary

Based on the 2012 International Building Code

CHAPTER 3 Use and Occupancy Classification

Section 304	B Occupancy Offices, Laboratories
Section 311	S-1 Occupancy Sally Port \ Vehicle Evidence Bays

Chapter 5 General Building Heights and Areas

The following Building Area Tabulation is based on table 503 using construction type IIB & Area Modifications per section 506 assuming a full 75% increase for frontage per section 506.2 and fully sprinklered per 506.33

Occupancy	**Area**	**Area Increase**	**Height**	**Height Increase**
B	23,000	86,250	3	4

Section 506.4.1.2 Total Allowable Area = 3 x 86,250= **258,750 sf**

Level	**Allowed Area**	**Actual Area**
Level One	86,250	31,508
Level Two	86,250	30,008
Level Three	86,250	17,004
Penthouse	86,250	12,000
Total	**258,750***	**90,520**

Complies for area and height for a building of more than one story.

Chapter 6 Types of Construction

Table 601

Building Elements	**Rating in Hours (Type IIB)**
Primary Structural Frame	0
Bearing Walls Exterior	0
Bearing Walls Interior	0
Nonbearing Walls and Partitions Interior	0
Floor Construction and Secondary Members	0
Roof Construction and Secondary Members	0

Chapter 7 Fire and Smoke Protection Features

Fire Walls.	2 hour. Sect 706.1
Fire Barriers.	2 hour. Table 707.3.9
Shaft Enclosures	2 hours when connecting 4 or more stories. Sect 708.4 1 hour when connecting less than 4 stories. Sect 708.4
Shaft Enclosure Exception	0 hour per exception 1016.1 When in a fully sprinklered building connecting only the first and second stories above the grade plane. Sect 708.2.11

Elevator Lobby Not required per 708.14.1 exception 4.

CHAPTER 8 Interior Finishes
Wall and Ceiling Finishes for Sprinklered Building per table 803.9

Group	**Exit Enclosures**	**Corridors**	**Rooms**
B	B	C	C

CHAPTER 9 Fire Protection Systems

Automatic Sprinkler Systems	Provided

Section 903.2.

Group	**Requirement**
B	Not required.

CHAPTER 10 Means of Egress

Table 1004.1.1

Function	**Factor**	**1**	**2**	**3**	**P**
Accessory storage / mechanical	300 gross	19			40
Assembly Unconcentrated	15 net	32		19	
Business Areas	100 gross	253	300	168	
Subtotal		**304**	**300**	**187**	**40**
Grand Total					**831**

Minimum Egress Width Shall be Calculated as per section 1005

Egress width per occupant at stairways	0.3 inches. (See also 1009)
Egress width per occupant at other egress	0.2 inches (See also 1018.2)

Accessible Means of Egress. Sect 1007.

Elevator Required	Required where an accessible floor is four or more stories above or below a level of exit discharge. Sect 1007.2.1
Stairways	Area of refuge not required per 1007.3 exception 3. Minimum width of 48" not required per 1007.3 exception 2.
Power operated doors	1008.1.4.2
Access controlled doors	1008.1.4.4
Common Path of Exit Travel	100 feet. Sect 1014.3 Exception 1
Spaces with on exit of exit access doorway	49 occupants maximum. Table 1015.1
Three exits or exit access doorways	501-1,000 occupants. Sect 1015.1.1

Exit Access Travel Distance. Table 1016.1

Group	**Distance**
B	300 feet
Corridor Fire Resistance Rating	0 hour per table 1018.1

Minimum number of exits from Stories based on Occupant Load. Table 1021.1

Occupant Load	**Number of Exits / Story**
1-500	2
501-1000	3
More than 1000	4

Exit Enclosures	2 hours when connecting four stories and not less than 1 hour when connecting when connecting less than four stories. Sect 1022
Or	
	0 hour per exception 1016.1 When in a fully sprinklered building connecting only the first and second stories above the grade plane. Sect 708.2.11 & 1021.1.4

CHAPTER 11 Accessibility

Accessible Route

Site Arrival	Accessible routes within the site shall be provided from public transportation stops; accessible parking; accessible passenger loading zones; and public streets or sidewalks to the accessible building entrance. Sect 1104.1
Within a Site	At least one accessible route shall connect accessible buildings, accessible facilities, accessible elements and accessible spaces that are the same site. Sect 1104.2
Connected Spaces	When a building or portion of a building is required to be accessible, an accessible route shall be provided to each portion of the building, to accessible building entrances, connecting accessible pedestrian walkways and the public way. Sect 1104.3
Multilevel Buildings	At least one accessible route shall connect each accessible level. Sect 1104.4
Public Entrances	At least 60 % of all public entrances shall be accessible. Sect1105.1

Special Occupancies

Assistance Listening Systems	Each assembly area where audible communications are integral to the use of the space shall have an assistive listening system. Sect 1108.2.7
Toilet and bathing facilities	Each toilet room and bathing room shall be accessible. Sect 1109.2

Signage

Accessible signage locations	Accessible parking, passenger loading zones, toilet rooms, entrances, directional signage. Sect 1110.1

CHAPTER 29 Plumbing Systems

Table 2902.1 Fixture Count- Classroom Building

Occupancy	Water Closets	Lavatories	Drinking Fountains
B	18	12	9

OTHER CODES including by reference:

ICC A117.1	2003
ADAAG	2010

SECTION 5 | Appendix

TABLE OF CONTENTS

Equipment List	2 pages
Schematic Design Drawings	28 pages (Under separate cover)

	Description	Qty	Unit	Unit Price	Total	Notes
	Central Chemical Storage				-	
	Flammable Storage Chemical Cabinet	2	EA		-	CFCI, Just Rite Mfg., 18"Dx43"Wx65"H, self-close
	Acid Storage Cabinets	2	EA		-	CFCI Just Rite Mfg., 18"Dx43"Wx65"H, polypropylene liner
	Waste Chemical Cabinet	3	EA		-	CFCI, Just Rite Mfg, flamm. Cab., 18"Dx43"Wx65"H, self-close
	Emergency Shower / Eyewash	1	EA		-	CFCI, recessed type, Watersaver SSBF909PCC
	Bacteriology				-	
	Incubators	7	EA		-	OFOI
	H2O Bath	4	EA		-	OFOI
	Plate Stations	30	EA		-	OFOI
	Refrigerator	4	EA		-	TBD which lab refrigerators and freezers are Owner provided
	Lab Counter	202	EA		-	What are the dimensions? Epoxy tops? Base cabinets?
						30"D epoxy resin tops with base cabs & kneespaces below
	Sinks	9	EA		-	Epoxy resin drop-in, 25"Wx15"FBx10"D w/ HW, CW &
						drench hose eyewash, foot pedals at non-ADA and infrared
						at ADA (to be verified)
	Autoclave	1	EA		-	OFOI? - relocated
	Large Glass Washer	1	EA		-	CFCI - Miele G7883?-To be verified
	Lab Counter Media Prep	24	EA		-	30"D epoxy resin tops with base cabs & kneespaces below
	Lab Counter Sample Prep	24	EA		-	30"D epoxy resin tops with base cabs & kneespaces below
	Marble Table	1	EA		-	OFOI?
	Glassware Storage	3	EA		-	CFCI, 3'Wx2'D lab casework tall cabinet with glass in doors
	Cart Park	4	EA		-	TBD whether carts are in OFOI or CFCI
	Emergency Shower / Eyewash	3	EA		-	CFCI, recessed type, Watersaver SSBF909PCC
	FTIR	1	EA		-	OFOI
	Cryoscope	1	EA		-	OFOI
	Somascope	1	EA		-	OFOI
	Fume Hood	3	EA		-	CFCI, (3) 6' hoods, one needs to be ADA compliant
	Floor Mounted Mobile Autoclave	1	EA		-	OFOI?
	BSC	1	EA		-	CFCI, Class 2, A2 vented, 6' unit
	Refrigerator / Freezer	1	EA		-	TBD which lab refrigerators and freezers are Owner provided
	Chemistry				-	
	Lab Counter	376	EA		-	What are the dimensions? Epoxy tops? Base cabinets?
						30"D epoxy resin tops with base cabs & kneespaces below
						376 is the linear feet but refer to floor plans for more
						current counter lengths.
	Marble Table	8	EA		-	OFOI?
	Floor Mounted Fume Hood	5	EA		-	CFCI, all 6 ft. units. - may have been changed to counter
						mounted - verify
	Flammable Storage Cabinet	3	EA		-	CFCI, Just Rite Mfg., 18"Dx43"Wx65"H, self-close
	Fume Hood	14	EA		-	CFCI, (2) are 8 ft. and the rest are 6 ft. units
	SPE Work Station	4	EA		-	(4) 8 ft. long workstations, 3 ft deep
	Sink	16	EA		-	Epoxy resin drop-in, 25"Wx15"FBx10"D w/ HW, CW &
						drench hose eyewash, foot pedals at non-ADA and infrared
						at ADA (to be verified)
	Centrifuge	6	EA		-	OFOI
	Emergency Shower / Eyewash	4	EA		-	CFCI, recessed type, Watersaver SSBF909PCC
	GC	6	EA		-	what is this?Gas Chromatograph, OFOI
	GC MS	3	EA		-	what is this?Gas Chromatograph Mass Spectrometer, OFOI
	LC	2	EA		-	what is this?Liquid Chromatograph, OFOI
	LC MS	1	EA		-	what is this?Liquid Chromatograph Mass Spetrometer,OFOI
	LC MS / MS	1	EA		-	what is this? Same as above w/dual MS, OFOI
	Oven	3	EA		-	OFOI
	Large Oven	3	EA		-	OFOI
	Furnace	3	EA		-	OFOI
	Refrigerator - Double Slide	2	EA		-	TBD which lab refrigerators and freezers are Owner provided
	Refrigerator / Freezer	4	EA		-	TBD which lab refrigerators and freezers are Owner provided
	Freezer -20	1	EA		-	TBD which lab refrigerators and freezers are Owner provided
	Refrigerator / Freezer - Future	2	EA		-	TBD which lab refrigerators and freezers are Owner provided
	ICP	1	EA		-	OFOI

	Fiber Extraction	1	EA		-	8 ft. long workstations, 3 ft deep
	Meat Analysis Alcove	30	EA		-	Refer to floor plans for counter lengths. All 30"D epoxy
						resin counters with base cabinets and knee spaces.
	ICPMS	1	EA		-	OFOI
	Dishwasher	1	EA		-	CFCI
	Cart Park	2	EA		-	TBD whether carts are in OFOI or CFCI
	Open Shelving	13	EA		-	CFCI, Metro full height S.S. open shelving
	Ag & Food Specific Support				-	
	Lab Counter	60	EA		-	What are the dimensions? Epoxy tops? Base cabinets?
	Sink	1	EA		-	Epoxy resin drop-in, 25"Wx15"FBx10"D w/ HW, CW &
						drench hose eyewash, foot pedals at non-ADA and infrared
						at ADA (to be verified)
	Refrigerator - Double Door	2	EA		-	TBD which lab refrigerators and freezers are Owner provided
	Shelving	16	EA		-	CFCI, Metro full height S.S. open shelving
	Autopsy / Morgue				-	
	Floor Scale	2	EA		-	CFCI, Recessed body scale with digital readout
	Mobile Ladder	2	EA		-	OFOI
	Body Receiving Data Recording Counter	30	EA		-	30"D SS tops with SS base cabs & kneespaces below
	Evidence Storage Lockers	5	EA		-	CFCI
	Standard X-Ray	5	EA		-	OFOI
	Sink		EA		-	no quantity listed (1) in x-ray, SS
	Work Stations	8	EA		-	CFCI, 30" D SS counter, 6 LF each
	Processor Bench	8	EA		-	CFCI, 30" SS counter, 8 LF
	Full Height Storage Cabinets		EA		-	no quantity listed CFCI, plan for 2 full height, SS.
	Dissection Stations	7	EA		-	CFCI, Mortech backdraft stations
	Mobile Tables	7	EA		-	CFCI, 42" x 72", 6" locking wheels, SS construction and top
	Lab Counter	141	EA		-	What are the dimensions? Epoxy tops? Base cabinets?
						30"D SS tops with SS base cabs & kneespaces below
	Anthropology / Isolation Bone Boiling	46	EA		-	30"D SS tops with SS base cabs & kneespaces below
	Body Cooler - 7 Bodies	1	EA		-	CFCI
	Body Cooler - 56 Bodies	1	EA		-	CFCI
	Refrigerated Tissue Storage	1	EA		-	Space within Main Body Cooler
	Biohazard Waste Storage Refrigerator	1	EA		-	Space within Main Body Cooler
	Body Freezer - 7 Bodies	1	EA		-	CFCI
	Frozen Tissue Storage	1	EA		-	Space within Body Freezer
	OR Equipment	1	EA		-	Suppplied by outside agency (tissue recovery)
	Sink	2	EA		-	CFCI, SS
	Shelving	33	EA		-	CFCI, Metro full height S.S. open shelving
	Floor Sink	2	EA		-	CFCI
	Fume Hood	1	EA		-	CFCI, 6 ft. unit
	Chemical Storage Cabinet	1	EA		-	CFCI, Just Rite Mfg., 18"Dx43"Wx65"H, self-close
	ID / Impressions				-	
	Lab Workstations	8	EA		-	CFCI, Epoxy resin counter, 30" deep, refer to plans
	Oven	1	EA		-	OFOI
	Fume Hood	1	EA		-	CFCI, 4 ft. unit
	Ninhydrine Chamber	1	EA		-	OFOI
	Fume Hood with Sink in Hood	2	EA		-	CFCI, (1) 8 ft. and (1) 6 ft.
	Superglue Fisher Ham	1	EA		-	CFCI, Fisher Hamilton 950P200GY & 950P201GY
	Lab Counter	46	EA		-	What are the dimensions? Epoxy tops? Base cabinets?
						30"D epoxy resin tops with base cabs & kneespaces below
	Tall Cabinet	2	EA		-	CFCI, 3'Wx2'D lab casework with glass in doors
	Drying Cabinet	2	EA		-	Existing or new? TBD
	Refrigerator / Freezer Combo	1	EA		-	TBD which lab refrigerators and freezers are Owner provided
	Glassware Washer	1	EA		-	CFCI - Miele G7883
	Sink	3	EA		-	Epoxy resin drop-in, 25"Wx15"FBx10"D w/ HW, CW &
						drench hose eyewash, foot pedals at non-ADA and infrared
						at ADA (to be verified)
	Emergency Shower / Eyewash	2	EA		-	CFCI, recessed type, Watersaver SSBF909PCC
	Large Case Tables	2	EA		-	CFCI, painted stl. w/ epoxy tops, 42" x 72", adj. ht.
	Work Table	2	EA		-	CFCI, painted stl. w/ epoxy tops, 48" x 96", adj. ht.
	Forensic Biology / Serology				-	

	Work Table	4	EA		-	CFCI, painted stl. w/ epoxy tops, 48" x 96", adj. ht.
	Lab Counter	118	EA		-	What are the dimensions? Epoxy tops? Base cabinets?
						30"D epoxy resin tops with base cabs & kneespaces below
	Sink	8	EA		-	Epoxy resin drop-in, 25"Wx15"FBx10"D w/ HW, CW &
						drench hose eyewash, foot pedals at non-ADA and infrared
						at ADA (to be verified)
	Lab Workstations	10	EA		-	CFCI, Epoxy resin counter, 30" deep, refer to plans
	Fume Hood	4	EA		-	CFCI, 6 ft. unit
	BSC	1	EA		-	CFCI, 6 ft. biological safety cabinet
	Emergency Shower / Eyewash	2	EA		-	CFCI, recessed type, Watersaver SSBF909PCC
	Refrigerator / Freezer Combo	3	EA		-	TBD which lab refrigerators and freezers are Owner provided
	Refrigerator Double Slide	2	EA		-	TBD which lab refrigerators and freezers are Owner provided
	Refrigerator Double Slide Future	1	EA		-	TBD which lab refrigerators and freezers are Owner provided
	Refrigerator	2	EA		-	TBD which lab refrigerators and freezers are Owner provided
	Walk in Freezer - Long Term Evidence	10	EA		-	CFCI
	Sink and Glass Wash by Hand	2	EA		-	Epoxy resin drop-in, 25"Wx15"FBx10"D w/ HW, CW &
						drench hose eyewash, foot pedals at non-ADA and infrared
						at ADA (to be verified)
	Autoclave	2	EA		-	One is counter mounted and OFOI. The other is floor mtd.
						Need to verify who is providing.
	Glass Storage	1	EA		-	CFCI, 3'Wx2'D tall lab casework cabinet with glass in doors
	Emergency Shower / Eyewash	1	EA		-	CFCI, recessed type, Watersaver SSBF909PCC
	Extraction Workstations	13	EA		-	30"D epoxy resin tops with base cabs & kneespaces below
	CODIS Extraction Workstations	3	EA		-	30"D epoxy resin tops with base cabs & kneespaces below
	Equipment Island Counter	2	EA		-	Epoxy resin tops with base cabs & kneespaces below.
						Refer to plans
	Set Up BSC's	4	EA		-	CFCI, 4 ft. biological safety cabinets
	Lab Bench	20	EA		-	30"D epoxy resin tops with base cabs & kneespaces below
	Thermal Cyclers	8	EA		-	OFOI
	Freezer -20	1	EA		-	TBD which lab refrigerators and freezers are Owner provided
	ABI 3500	3	EA		-	OFOI
	RT PCR 7500	3	EA		-	OFOI
	Centrifuge	2	EA		-	OFOI
	Chemistry / Trace				-	
	Lab Workstations	13	EA		-	CFCI, Epoxy resin counter, 30" deep, refer to plans
	Shared Lab Counter	52	EA		-	30"D epoxy resin tops with base cabs & kneespaces below
	Stereo Scope	2	EA		-	OFOI
	Fume Hood	8	EA		-	CFCI, 6 ft., one will need to be ADA
	Centrifuge on Counter	1	EA		-	OFOI
	Glass Washer	1	EA		-	CFCI - Miele G7883
	Sink	9	EA		-	Epoxy resin drop-in, 25"Wx15"FBx10"D w/ HW, CW &
						drench hose eyewash, foot pedals at non-ADA and infrared
						at ADA (to be verified)
	Lab Counter	36	EA		-	What are the dimensions? Epoxy tops? Base cabinets?
						30"D epoxy resin tops with base cabs & kneespaces below
	Glass Storage Cabinets	2	EA		-	CFCI, 3'Wx2'D tall lab casework cabinet with glass in doors
	Marble Table	1	EA		-	OFOI?
	Large Case Tables	1	EA		-	CFCI, painted stl. w/ epoxy tops, 42" x 72", adj. ht.
	Reference Center	4	EA		-	These are wall cabinets.
	Oven	3	EA		-	OFOI
	NARC Storge Cabinet	1	EA		-	CFCI, Double locking wall mounted
	Refrigerator / Freezer Combo	1	EA		-	TBD which lab refrigerators and freezers are Owner provided
	Flammable Storage Freezer - 20	1	EA		-	TBD which lab refrigerators and freezers are Owner provided
	Refrigerator	2	EA		-	TBD which lab refrigerators and freezers are Owner provided
	Emergency Shower / Eyewash	1	EA		-	CFCI, recessed type, Watersaver SSBF909PCC
	Large Table	1	EA		-	CFCI, painted stl. w/ epoxy tops, 42" x 84", adj. ht.
	Scanning Electron Microscope	1	EA		-	OFOI
	GC / MS	6	EA		-	OFOI
	FTIR	1	EA		-	OFOI
	GC Future	1	EA		-	OFOI
	Maintenance / Cleaning Bench	8	EA		-	30"D epoxy resin tops with base cabs & kneespaces below

	Storage Cabinets	2	EA		-	CFCI, 3'Wx2'D tall lab casework cabinet with glass in doors
	Firearms / Toolmarks				-	
	Lab Workstations	5	EA		-	CFCI, Epoxy resin counter, 30" deep, refer to plans
	Shared Lab Counter	32	EA		-	30"D epoxy resin tops with base cabs & kneespaces below
	Reference Center / Library	2	EA		-	counter and wall shelves
	Ammo Storage - Tall Cabinets	8	EA		-	CFCI, 3'Wx2'D tall lab casework cabinet with glass in doors
	Sink	3	EA		-	Epoxy resin drop-in, 25"Wx15"FBx10"D w/ HW, CW &
						drench hose eyewash, foot pedals at non-ADA and infrared
						at ADA (to be verified)
	Work Table	2	EA		-	CFCI, painted stl. w/ epoxy tops, 36" x 84", adj. ht.
	High Density Storage System - 3500 Guns	1	EA		-	CFCI, Spacesaver HD carousels with 'Weapon WRX'
	Range	1	EA		-	CFCI, Bullet trap TBD
	Projectile Recovery Tank w/ Remote Firing S	1	EA		-	OFOI, Existing
	Remote Firing Device Park	1	EA		-	This is just floor space.
	Butcher Block Work Bench	20	EA		-	CFCI, 2" thick maple countertop
	Drill Press	1	EA		-	OFOI
	Vise	1	EA		-	OFOI
	Grinder	1	EA		-	OFOI
	Tool Storage Rack on Wall	1	EA		-	CFCI, Modern Metal Products 'MegaPeg' system
	Lab Counter	1	EA		-	What are the dimensions? Epoxy tops? Base cabinets?
						30"D epoxy resin tops with base cabs & kneespaces below
	Fume Hood	1	EA		-	CFCI, 6 ft., ADA compliant
	Work Table	1	EA		-	CFCI, painted stl. w/ epoxy tops, 36" x 84", adj. ht.
	Emergency Shower / Eyewash	1	EA		-	CFCI, recessed type, Watersaver SSBF909PCC
	Evidence				-	
	Lab Counter	20	EA		-	What are the dimensions? Epoxy tops? Base cabinets?
						30"D epoxy resin tops with base cabs & kneespaces below
	Sink	3	EA		-	Epoxy resin drop-in, 25"Wx15"FBx10"D w/ HW, CW &
						drench hose eyewash, foot pedals at non-ADA and infrared
						at ADA (to be verified)
	Evidence Intake Stations	2	EA		-	Epoxy resin counter - refer to plans
	Short Term Evidence Staging	2	EA		-	CFCI, (2) 42" x 72" mobile tables w/ epoxy resin tops
	Shared Lab Counter	16	EA		-	30"D epoxy resin tops with base cabs & kneespaces below
	Supply Cabinets	1	EA		-	CFCI, 3'Wx2'D tall lab casework cabinet with glass in doors
	Lab Carts	8	EA		-	TBD whether carts are in OFOI or CFCI
	Evidence Lockers Per Staff	3	EA		-	CFCI
	Evidence Lockers Bulky Evidence	3	EA		-	CFCI
	Evidence Vault	1	EA		-	CFCI, high density shelving
	Mobile Tables	1	EA		-	CFCI, painted stl. w/ epoxy tops, 48" x 96", adj. ht.
	Shelving	2	EA		-	CFCI, Metro full height S.S. open shelving
	Open Floor Bulk Storage	1	EA		-	This is just floor space.
	LIMS Station	6	EA		-	OFOI, on 6 LF of epoxy resin counter
	Stink Storage Cabinets (vented)	6	EA		-	CFCI, 2'Dx3'W tall cabinets, hard ducted exhaust
	Refrigerator - Double Door	2	EA		-	TBD which lab refrigerators and freezers are Owner provided
	Freezer	2	EA		-	TBD which lab refrigerators and freezers are Owner provided
	Pass Through Lockers or Carts	36	EA		-	CFCI
	Crime Scene Response				-	
	Deep Mud Sink	2	EA		-	CFCI
	Lab Counter	24	EA		-	What are the dimensions? Epoxy tops? Base cabinets?
						30"D epoxy resin tops with base cabs & kneespaces below
	Vehicle Lift	0	EA		-	no quantity listed Future purchase
	CA 9000	1	EA		-	what is this? Superglue Fuming Chamber, CFCI?
	Shelving	10	EA		-	CFCI, Metro full height S.S. open shelving
					-	
	Total				-	

TABLE OF CONTENTS

CIVIL			
CD101	DEMOLITION PLAN	Great Basin Engineering	
CS101	SITE PLAN	5746 South 1475 East	
CG101	GRADING & DRAINAGE PLAN	Ogden, Utah	
CU101	UTILITY PLAN	Coury Morris	801.394.4515
CD500	CONSTRUCTION DETAILS		
CD501	CONSTRUCTION DETAILS		
CD502	CONSTRUCTION DETAILS		
CD503	CONSTRUCTION DETAILS		
CD504	CONSTRUCTION DETAILS		
S101	GENERAL STRUCTURAL NOTES	Dunn Associates Inc	
S102	GENERAL STRUCTURAL NOTES	380 West 800 South Suite 100	
S103	GENERAL STRUCTURAL NOTES	Salt Lake City, Utah	
S104	GENERAL STRUCTURAL NOTES	Tait Ketchum	801.575.8877
S105	GENERAL STRUCTURAL NOTES		
S106	GENERAL STRUCTURAL NOTES		
S107	GENERAL STRUCTURAL NOTES		
S202	SECOND FLOOR FRAMING PLAN		
S203	THIRD FLOOR FRAMING PLAN		
S204	FOURTH FLOOR FRAMING PLAN		
S205	ROOF FRAMING PLAN		
ARCHITECTURAL			
AS101	SITE PLAN	CRSA	
AE101	MAIN LEVEL FLOOR PLAN	649 East South Temple	
AE101A	SALLY PORT PLAN	Salt Lake City, Utah	
AE102	LEVEL TWO FLOOR PLAN	Jeff Nielsen	801.746.6813
AE103	LEVEL THREE FLOOR PLAN		
AE104	PENTHOUSE	MWL	
AE301	BUILDING SECTIONS	11798 North Lakeridge Parkway	
		Ashland, Virginia	
		Russell McElroy	804.228.7473
MECHANICAL			
M100	MECHANICAL SITE PLAN	VBFA	
M101	MAIN LEVEL MECHANICAL SITE PLAN	330 South 300 East	
M102	LEVEL TWO MECHANICAL PLAN	Salt Lake City, Utah	
M103	LEVEL THREE MECHANICAL PLAN	Don Bradshaw	801.530.3148
M104	PENTHOUSE MECHANICAL PLAN		
M105	MECHANICAL ROOM PLAN		
ELECTRICAL			
ES101	ELECTRICAL SITE PLAN	Spectrum Engineers	
EE101	MAIN FLOOR ELECTRICAL PLAN	175 South Main Suite 300	
EE102	LEVEL TWO ELECTRICAL PLAN	Salt Lake City, Utah	
EE103	LEVEL THREE ELECTRICAL PLAN	David Wesemann	801.401.8468
EE104	PENTHOUSE ELECTRICAL PLAN		

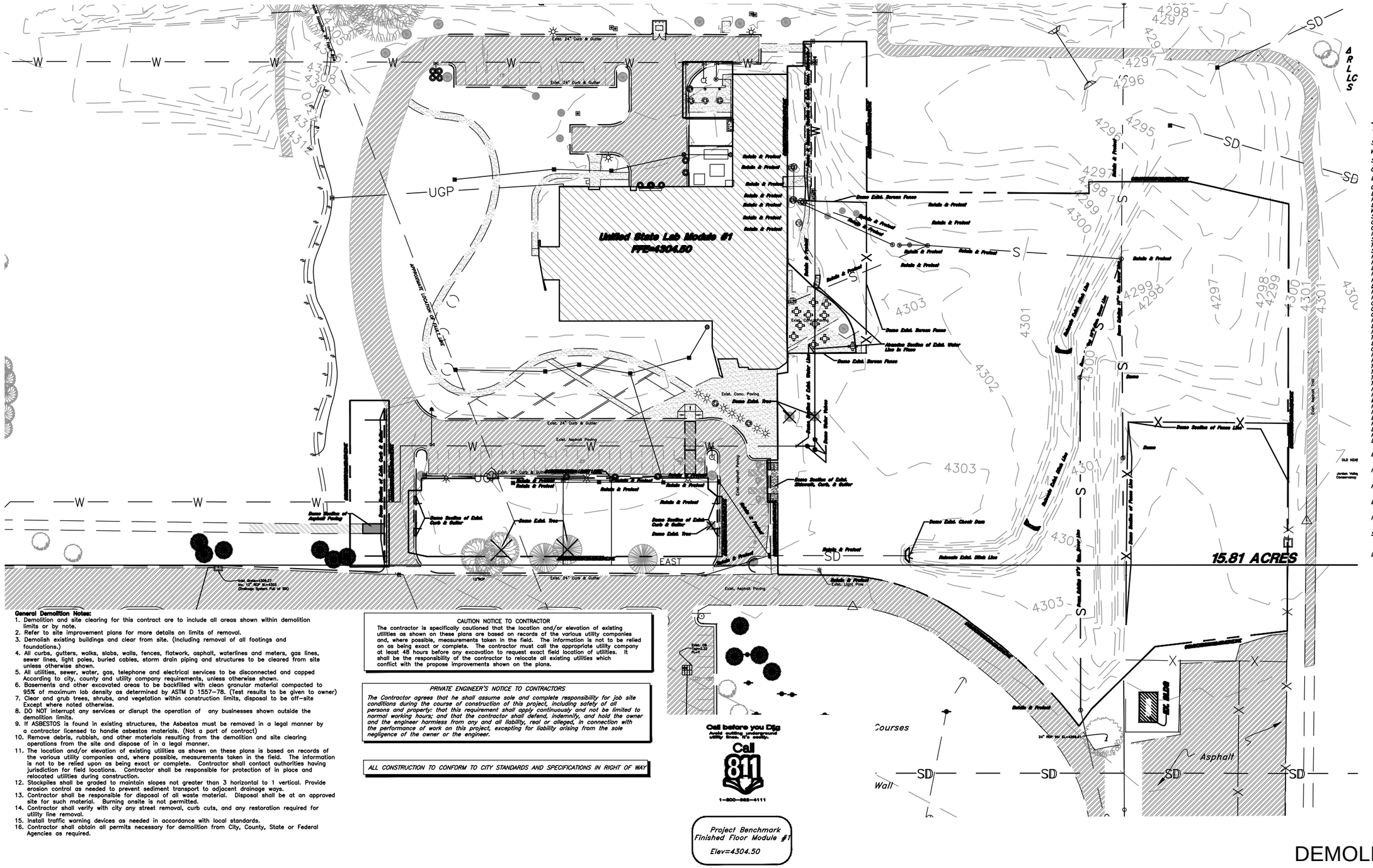

Legend

(Note: All items may not appear on drawing)

San. Sewer Manhole	S
Water Manhole	W
Storm Drain Manhole	SD
Cleanout	CO
Electrical Manhole	E
Catch Basins	
Exist. Fire Hydrant	
Fire Hydrant	
Exist. Water Valve	
Water Valve	
Sanitary Sewer	—S—
Culinary Water	—W—
Gas Line	—G—
Irrigation Line	—IW—
Storm Drain	—SD—
Telephone Line	—T—
Secondary Waterline	—SW—
Power Line	—P—
Fire Line	—F—
Land Drain	—LD—
Power pole	
Power pole w/guy	
Light Pole	
Fence	—x—x—x—
Flowline of ditch	
Overhead Power line	—OHP—
Corrugated Metal Pipe	CMP
Concrete Pipe	CP
Reinforced Concrete Pipe	RCP
Ductile Iron	DI
Polyvinyl Chloride	PVC
Top of Asphalt	TA
Edge of Asphalt	EA
Centerline	CL
Flowline	FL
Finish Floor	FF
Top of Curb	TC
Top of Wall	TWL
Top of Walk	TW
Top of Concrete	TCN
Natural Ground	NG
Finish Grade	FG
Match Existing	ME
Fire Department Connection	FDC
Finish Contour	—90—
Exist. Contour	—90—
Finish Grade	95.72TA
Exist. Grade	95.72TA
Ridge Line	—R—
Direction of Flow	
Existing Asphalt	
New Asphalt	
Heavy Duty Asphalt	
Existing Concrete	
New Concrete	
Spill Curb & Gutter	
Demo Tree	

General Demolition Notes:

1. Demolition and site clearing for this contract are to include all areas shown within demolition limits or by note.
2. Refer to site improvement plans for more details on limits of removal.
3. Demolish existing buildings and clear from site. (Including removal of all footings and foundations.)
4. All curbs, gutters, walks, slabs, walls, fences, flatwork, asphalt, waterlines and meters, gas lines, sewer lines, light poles, buried cables, storm drain piping and structures to be cleared from site unless otherwise shown.
5. All utilities, sewer, water, gas, telephone and electrical services to be disconnected and capped According to city, county and utility company requirements, unless otherwise shown.
6. Basements and other excavated areas to be backfilled with clean granular material compacted to 95% of maximum lab density as determined by ASTM D 1557-78. (Test results to be given to owner)
7. Clear and grub trees, shrubs, and vegetation within construction limits, disposal to be off-site Except where noted otherwise.
8. DO NOT interrupt any services or disrupt the operation of any businesses shown outside the demolition limits.
9. If ASBESTOS is found in existing structures, the Asbestos must be removed in a legal manner by a contractor licensed to handle asbestos materials. (Not a part of contract)
10. Remove debris, rubbish, and other materials resulting from the demolition and site clearing operations from the site and dispose of in a legal manner.
11. The location and/or elevation of existing utilities as shown on these plans is based on records of the various utility companies and, where possible, measurements taken in the field. The information is not to be relied upon as being exact or complete. Contractor shall contact authorities having jurisdiction for field locations. Contractor shall be responsible for protection of in place and relocated utilities during construction.
12. Stockpiles shall be graded to maintain slopes not greater than 3 horizontal to 1 vertical. Provide erosion control as needed to prevent sediment transport to adjacent drainage ways.
13. Contractor shall be responsible for disposal of all waste material. Disposal shall be at an approved site for such material. Burning onsite is not permitted.
14. Contractor shall verify with city any street removal, curb cuts, and any restoration required for utility line removal.
15. Install traffic warning devices as needed in accordance with local standards.
16. Contractor shall obtain all permits necessary for demolition from City, County, State or Federal Agencies as required.

CAUTION NOTICE TO CONTRACTOR

The contractor is specifically cautioned that the location and/or elevation of existing utilities as shown on these plans are based on records of the various utility companies and, where possible, measurements taken in the field. The information is not to be relied on as being exact or complete. The contractor must call the appropriate utility company at least 48 hours before any excavation to request exact field location of utilities. It shall be the responsibility of the contractor to relocate all existing utilities which conflict with the propose improvements shown on the plans.

PRIVATE ENGINEER'S NOTICE TO CONTRACTORS

The Contractor agrees that he shall assume sole and complete responsibility for job site conditions during the course of construction of this project, including safety of all persons and property; that this requirement shall apply continuously and not be limited to normal working hours; and that the contractor shall defend, indemnify, and hold the owner and the engineer harmless from any and all liability, real or alleged, in connection with the performance of work on this project, excepting for liability arising from the sole negligence of the owner or the engineer.

ALL CONSTRUCTION TO CONFORM TO CITY STANDARDS AND SPECIFICATIONS IN RIGHT OF WAY

DEMOLITION PLAN

1"=80'-0"

CRSA MWL

UNIFIED STATE LAB MODULE 2

Schematic Design Submittal

August 26, 2013

CD101

W:\13N904 Unified State Labs Module #2\dwg\13N904-S1-11x17.dwg, 8/26/2013 5:12:14 PM, RebeccaC, 1:1

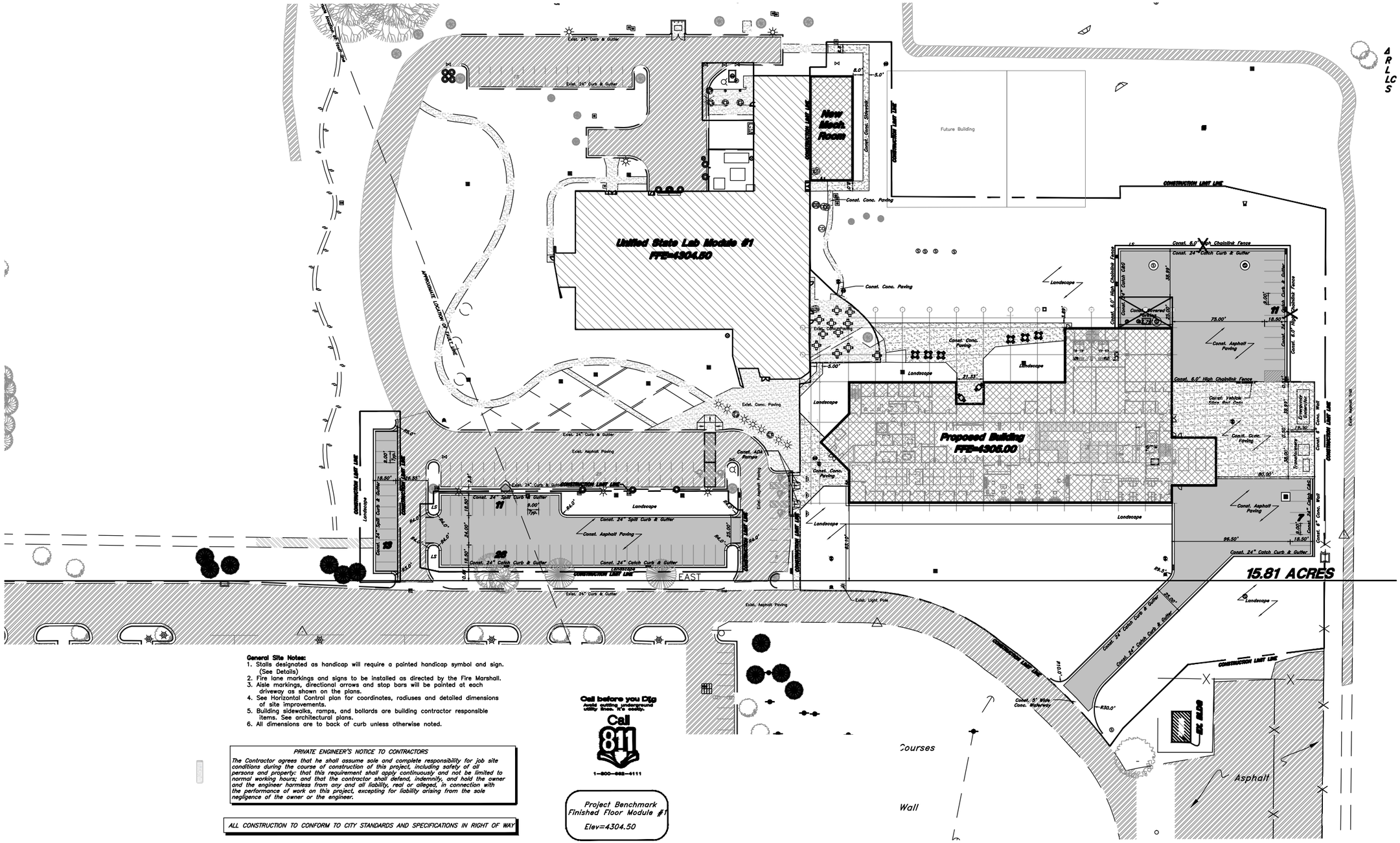

Legend

(Note: All items may not appear on drawing)

San. Sewer Manhole	S
Water Manhole	W
Storm Drain Manhole	SD
Cleanout	CO
Electrical Manhole	E
Catch Basins	
Exist. Fire Hydrant	
Fire Hydrant	
Exist. Water Valve	
Water Valve	
Sanitary Sewer	—S—
Culinary Water	—W—
Gas Line	—G—
Irrigation Line	—IW—
Storm Drain	—SD—
Telephone Line	—T—
Secondary Waterline	—SW—
Power Line	—P—
Fire Line	—F—
Land Drain	—LD—
Power pole	
Power pole w/guy	
Light Pole	
Fence	X X X X
Flowline of ditch	
Overhead Power line	—OHP—
Corrugated Metal Pipe	CMP
Concrete Pipe	CP
Reinforced Concrete Pipe	RCP
Ductile Iron	DI
Polyvinyl Chloride	PVC
Top of Asphalt	TA
Edge of Asphalt	EA
Centerline	CL
Flowline	FL
Finish Floor	FF
Top of Curb	TC
Top of Wall	TWL
Top of Walk	TW
Top of Concrete	TCN
Natural Ground	NG
Finish Grade	FG
Match Existing	ME
Fire Department Connection	FDC
Finish Contour	—90—
Exist. Contour	—90—
Finish Grade	95.37TA
Exist. Grade	95.72TA
Ridge Line	—R—
Direction of Flow	
Existing Asphalt	
New Asphalt	
Heavy Duty Asphalt	
Existing Concrete	
New Concrete	
Spill Curb & Gutter	
Demo Tree	

General Site Notes:

1. Stalls designated as handicap will require a painted handicap symbol and sign. (See Details)
2. Fire lane markings and signs to be installed as directed by the Fire Marshall.
3. Aisle markings, directional arrows and stop bars will be painted at each driveway as shown on the plans.
4. See Horizontal Control plan for coordinates, radiuses and detailed dimensions of site improvements.
5. Building sidewalks, ramps, and bollards are building contractor responsible items. See architectural plans.
6. All dimensions are to back of curb unless otherwise noted.

PRIVATE ENGINEER'S NOTICE TO CONTRACTORS

The Contractor agrees that he shall assume sole and complete responsibility for job site conditions during the course of construction of this project, including safety of all persons and property; that this requirement shall apply continuously and not be limited to normal working hours; and that the contractor shall defend, indemnify, and hold the owner and the engineer harmless from any and all liability, real or alleged, in connection with the performance of work on this project, excepting for liability arising from the sole negligence of the owner or the engineer.

ALL CONSTRUCTION TO CONFORM TO CITY STANDARDS AND SPECIFICATIONS IN RIGHT OF WAY

Call before you Dig
Avoid cutting underground utility lines. It's costly.
Call 811
1-800-662-4111

Project Benchmark
Finished Floor Module #1
Elev=4304.50

SITE PLAN
1"=80'-0"

CRSA MWL

UNIFIED STATE LAB MODULE 2

Schematic Design Submittal

August 26, 2013

CS101

W:\13N904 Unified State Labs Module #2\dwg\13N904-S1-11x17.dwg, 8/26/2013 5:12:27 PM, RebeccaC, 1:1

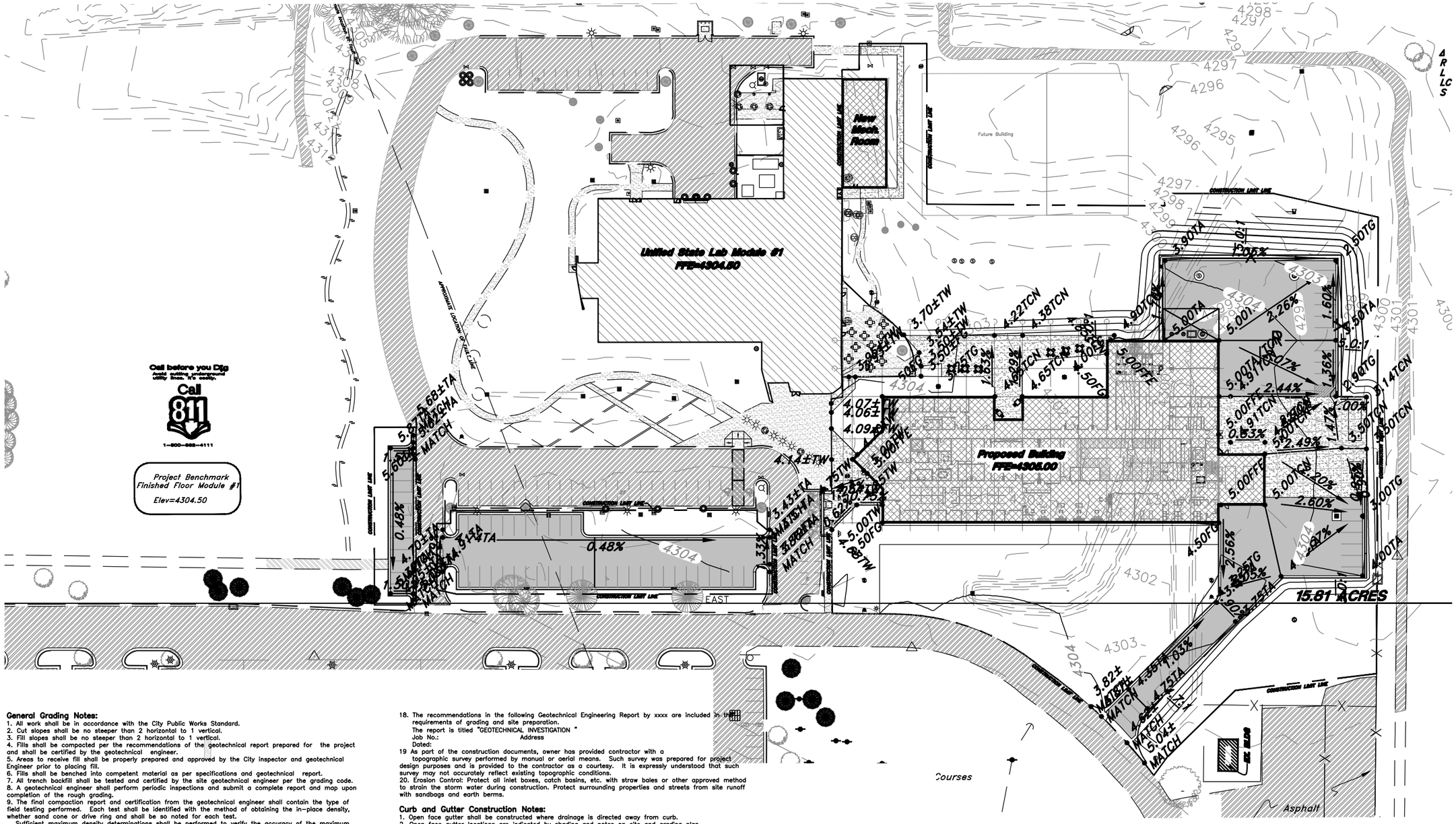

Call before you Dig
Avoid cutting underground utility lines. It's easy.
Call 811
1-800-662-4111

Project Benchmark
Finished Floor Module #1
Elev=4304.50

Legend

(Note: All items may not appear on drawing)

San. Sewer Manhole	S
Water Manhole	W
Storm Drain Manhole	D
Cleanout	C
Electrical Manhole	E
Catch Basins	
Exist. Fire Hydrant	
Fire Hydrant	
Exist. Water Valve	WV
Water Valve	WV
Sanitary Sewer	S
Culinary Water	W
Gas Line	G
Irrigation Line	IW
Storm Drain	SD
Telephone Line	T
Secondary Waterline	SW
Power Line	P
Fire Line	F
Land Drain	LD
Power pole	
Power pole w/guy	
Light Pole	
Fence	X X X X
Flowline of ditch	
Overhead Power line	OHP
Corrugated Metal Pipe	CMP
Concrete Pipe	CP
Reinforced Concrete Pipe	RCP
Ductile Iron	DI
Polyvinyl Chloride	PVC
Top of Asphalt	TA
Edge of Asphalt	EA
Centerline	CL
Flowline	FL
Finish Floor	FF
Top of Curb	TC
Top of Wall	TWL
Top of Walk	TW
Top of Concrete	TCN
Natural Ground	NG
Finish Grade	FG
Match Existing	ME
Fire Department Connection	FDC
Finish Contour	90
Exist. Contour	90
Finish Grade	95.37TA
Exist. Grade	95.72TA
Ridge Line	R
Direction of Flow	
Existing Asphalt	
New Asphalt	
Heavy Duty Asphalt	
Existing Concrete	
New Concrete	
Spill Curb & Gutter	
Demo Tree	

General Grading Notes:

1. All work shall be in accordance with the City Public Works Standard.
2. Cut slopes shall be no steeper than 2 horizontal to 1 vertical.
3. Fill slopes shall be no steeper than 2 horizontal to 1 vertical.
4. Fills shall be compacted per the recommendations of the geotechnical report prepared for the project and shall be certified by the geotechnical engineer.
5. Areas to receive fill shall be properly prepared and approved by the City inspector and geotechnical Engineer prior to placing fill.
6. Fills shall be benched into competent material as per specifications and geotechnical report.
7. All trench backfill shall be tested and certified by the site geotechnical engineer per the grading code.
8. A geotechnical engineer shall perform periodic inspections and submit a complete report and map upon completion of the rough grading.
9. The final compaction report and certification from the geotechnical engineer shall contain the type of field testing performed. Each test shall be identified with the method of obtaining the in-place density, whether sand cone or drive ring and shall be so noted for each test.
   Sufficient maximum density determinations shall be performed to verify the accuracy of the maximum density curves used by the field technician.
10. Dust shall be controlled by watering.
11. The location and protection of all utilities is the responsibility of the permitee.
12. Approved protective measures and temporary drainage provisions must be used to protect adjoining properties during the grading project.
13. All public roadways must be cleared daily of all dirt, mud and debris deposited on them as a result of the grading operation. Cleaning is to be done to the satisfaction of the city engineer.
14. The site shall be cleared and grubbed of all vegetation and deleterious matter prior to grading.
15. The contractor shall provide shoring in accordance with OSHA requirements for trench walls.
16. Aggregate base shall be compacted per the geotechnical report prepared for the project.
17. Elevations shown on this plan are finish grades. Rough grades are the subgrades of the improvements shown hereon.
18. The recommendations in the following Geotechnical Engineering Report by xxxx are included in the requirements of grading and site preparation.
    The report is titled "GEOTECHNICAL INVESTIGATION "
    Job No.: Address
    Dated:
19 As part of the construction documents, owner has provided contractor with a topographic survey performed by manual or aerial means. Such survey was prepared for project design purposes and is provided to the contractor as a courtesy. It is expressly understood that such survey may not accurately reflect existing topographic conditions.
20. Erosion Control: Protect all inlet boxes, catch basins, etc. with straw bales or other approved method to strain the storm water during construction. Protect surrounding properties and streets from site runoff with sandbags and earth berms.

Curb and Gutter Construction Notes:

1. Open face gutter shall be constructed where drainage is directed away from curb.
2. Open face gutter locations are indicated by shading and notes on site and grading plan.
3. It is the responsibility of the surveyor to adjust top of curb grades at the time construction staking.
4. Refer to the typical details for a standard and open face curb and gutter for dimensions.
5. Transitions between open face and standard curb and gutter are to be smooth. Hand form these areas if necessary.

ADA Notes:

Contractor must maintain a running slope on Accessible routes no steeper than 5.0% (1:20). The cross slope for Accessible routs must be no steeper than 2.0% (1:50). All Accessible routes must have a minimum clear width of 36". If grades on plans do not meet this requirement notify Consultants immediately.

The Client, Contractor, and Subcontractor should immediately notify the Consultant of any conditions of the project that they believe do not comply with the current state of the ADA and/or FHAA.

PRIVATE ENGINEER'S NOTICE TO CONTRACTORS

The Contractor agrees that he shall assume sole and complete responsibility for job site conditions during the course of construction of this project, including safety of all persons and property: that this requirement shall apply continuously and not be limited to normal working hours; and that the contractor shall defend, indemnify, and hold the owner and the engineer harmless from any and all liability, real or alleged, in connection with the performance of work on this project, excepting for liability arising from the sole negligence of the owner or the engineer.

ALL CONSTRUCTION TO CONFORM TO CITY STANDARDS AND SPECIFICATIONS IN RIGHT OF WAY

GRADING & DRAINAGE PLAN

1"=80'-0"

CRSA MWL

UNIFIED STATE LAB MODULE 2

Schematic Design Submittal

August 26, 2013

CG101

W:\13N904 Unified State Labs Module #2\dwg\13N904-S1-11x17.dwg, 8/26/2013 5:12:45 PM, RebeccaC, 1:1

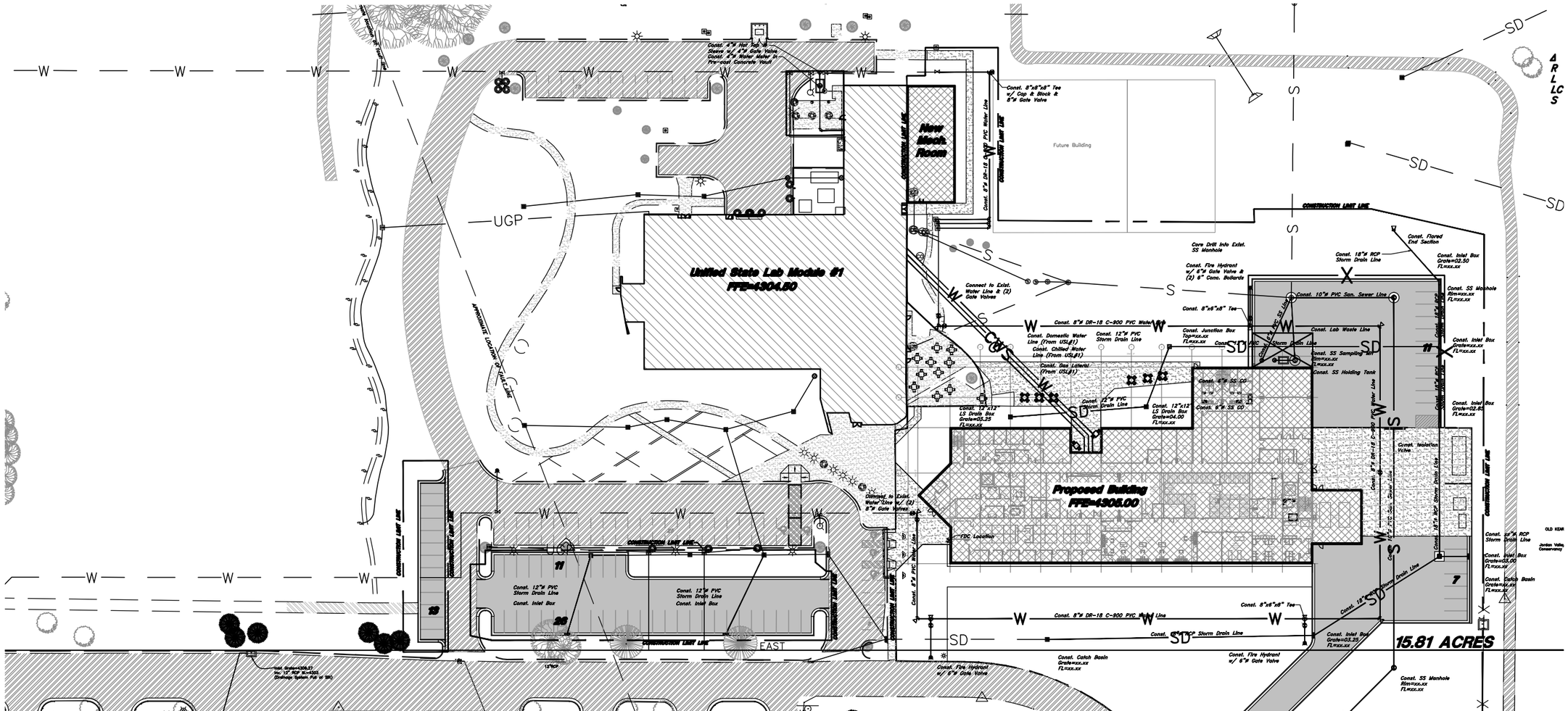

Legend

(Note: All items may not appear on drawing)

San. Sewer Manhole	S
Water Manhole	W
Storm Drain Manhole	SD
Cleanout	CO
Electrical Manhole	E
Catch Basins	
Exist. Fire Hydrant	
Fire Hydrant	
Exist. Water Valve	
Water Valve	
Sanitary Sewer	—S—
Culinary Water	—W—
Gas Line	—G—
Irrigation Line	—IW—
Storm Drain	—SD—
Telephone Line	—T—
Secondary Waterline	—SW—
Power Line	—P—
Fire Line	—F—
Land Drain	—LD—
Power pole	
Power pole w/guy	
Light Pole	
Fence	X X X X
Flowline of ditch	
Overhead Power line	—OHP—
Corrugated Metal Pipe	CMP
Concrete Pipe	CP
Reinforced Concrete Pipe	RCP
Ductile Iron	DI
Polyvinyl Chloride	PVC
Top of Asphalt	TA
Edge of Asphalt	EA
Centerline	CL
Flowline	FL
Finish Floor	FF
Top of Curb	TC
Top of Wall	TWL
Top of Walk	TW
Top of Concrete	TCN
Natural Ground	NG
Finish Grade	FG
Match Existing	ME
Fire Department Connection	FDC
Finish Contour	—90—
Exist. Contour	—90—
Finish Grade	95.37TA
Exist. Grade	95.72TA
Ridge Line	—R—
Direction of Flow	
Existing Asphalt	
New Asphalt	
Heavy Duty Asphalt	
Existing Concrete	
New Concrete	
Spill Curb & Gutter	
Demo Tree	

General Utility Notes:

1. Coordinate all utility connections to building with plumbing plans and building contractor.
2. Verify depth and location of all existing utilities prior to constructing any new utility lines. Notify Civil Engineer of any discrepancies or conflicts prior to any connections being made.
3. All catch basin and inlet box grates are to be bicycle proof.
4. All inlet boxes located in curb and gutter are to be placed parallel to the curb and gutter and set under the frame and grate. Improperly placed boxes will be removed and replaced at no additional cost to the owner. Precast or cast in place boxes are acceptable.
5. Refer to the site electrical plan for details and locations of electrical lines, transformers and light poles.
6. Gas lines, telephone lines, and cable TV lines are not a part of these plans unless otherwise noted.
7. Water meters are to be installed per city standards and specifications. It will be the contractor's responsibility to install all items required.
8. Water lines, valves, fire hydrants, fittings etc. are to be constructed as shown. Contractor is responsible to construct any vertical adjustments necessary to clear sewer, storm drain or other utilities as necessary including valve boxes and hydrant spools to proper grade.
9. Field verify all existing and/or proposed Roof Drain/Roof Drain down spout connections to Storm Water System with Civil, Plumbing & Architectural plans. Notify Engineer of any discrepancies.

Utility Piping Materials:
All piping to be installed per manufacturers recommendations. Refer to project specifications for more detailed information regarding materials, installation, etc.

Culinary Service Laterals

1. 3/4" to 2" diameter pipe – copper tube ASTM B, Type K, Soft Temper
2. Over 2" diameter pipe – AWWA C-900 Class 150 pipe

Water Main Lines and Fire Lines

1. Pipe material as shown on utility plan view or to meet city standards.

Sanitary Sewer Lines

1. All sewer piping to be Polyvinyl Chloride (PVC) sewer pipe, ASTM D 3034, Type PSM, SDR 35

Storm Drain Lines

1. 10" pipes or smaller – Polyvinyl Chloride (PVC) sewer pipe, ASTM D3034, Type PSM, SDR 35
2. 12" to 21" pipes – Concrete Pipe, ASTM C14, Class III up to 13' of cover. For greater than 13' feet of cover, use reinforced concrete pipe and classes listed below.
3. 24" pipes or larger – Reinforced Concrete Pipe, ASTM C76, Class III up to 13' of cover, Class IV for 13' to 21' of cover, Class V for 21' to 32' of cover, and Special Design for cover greater than 32 feet.

CAUTION NOTICE TO CONTRACTOR

The contractor is specifically cautioned that the location and/or elevation of existing utilities as shown on these plans are based on records of the various utility companies and, where possible, measurements taken in the field. The information is not to be relied on as being exact or complete. The contractor must call the appropriate utility company at least 48 hours before any excavation to request exact field location of utilities. It shall be the responsibility of the contractor to relocate all existing utilities which conflict with the propose improvements shown on the plans.

PRIVATE ENGINEER'S NOTICE TO CONTRACTORS

The Contractor agrees that he shall assume sole and complete responsibility for job site conditions during the course of construction of this project, including safety of all persons and property; that this requirement shall apply continuously and not be limited to normal working hours; and that the contractor shall defend, indemnify, and hold the owner and the engineer harmless from any and all liability, real or alleged, in connection with the performance of work on this project, excepting for liability arising from the sole negligence of the owner or the engineer.

ALL CONSTRUCTION TO CONFORM TO CITY STANDARDS AND SPECIFICATIONS IN RIGHT OF WAY

UTILITY PLAN

1"=80'-0"

CRSA MWL

UNIFIED STATE LAB MODULE 2

Schematic Design Submittal

August 26, 2013

CU101

W:\13N904 Unified State Labs Module #2\dwg\13N904-S1-11x17.dwg, 8/26/2013 5:13:04 PM, RebeccaC, 1:1

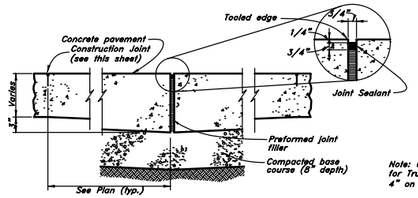

Note: 6" Thick Required for Truck and Dock Area 4" on Standard Walkways.

EXPANSION JOINT

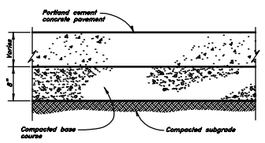

CONCRETE PAVEMENT SECTION

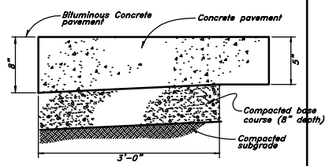

THICKENED EDGE

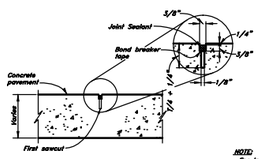

CONTRACTION JOINT

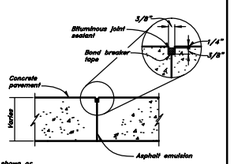

CONSTRUCTION JOINT

NOTE: For information not otherwise shown or noted see concrete pavement section.

Portland Cement Concrete Pavement

NOT TO SCALE

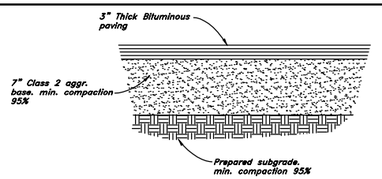

Typical Bituminous Pavement Section Parking Areas

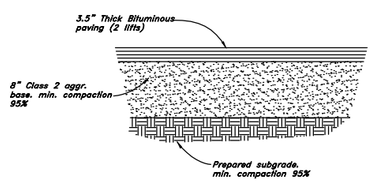

Typical Bituminous Pavement Section Heavy Duty Drives

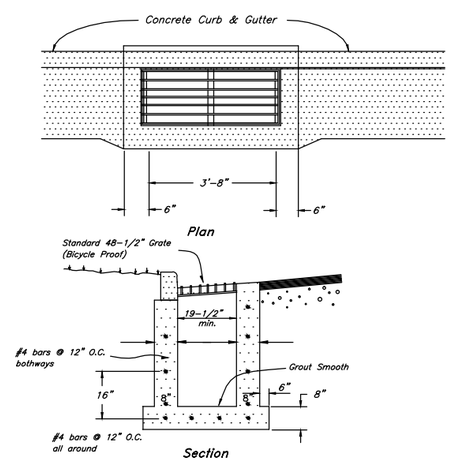

Typical Inlet Box

in curb & gutter

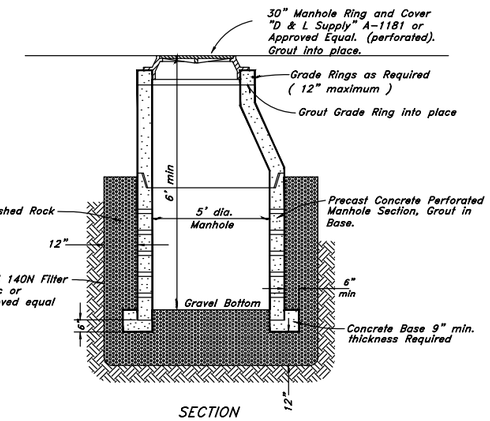

Typical Sump Detail

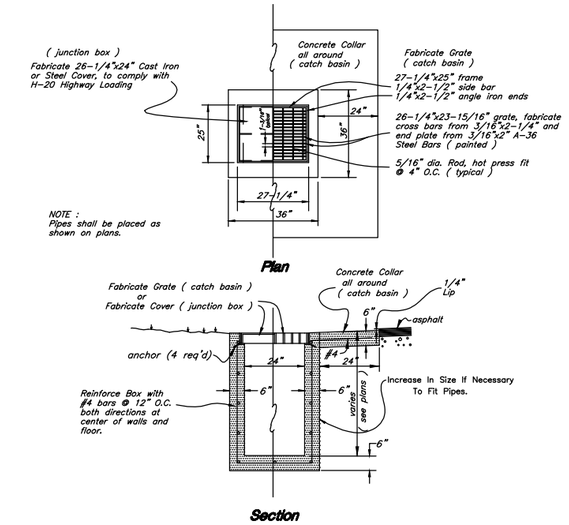

TYPICAL CATCH BASIN TYPICAL JUNCTION BOX

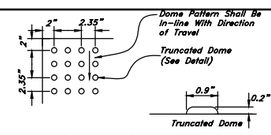

All Sidewalk Curb Ramps Shall Have Detectable Warning Surfaces That Extend The Full Width And Depth Of The Curb Ramp And In The Direction Of Travel 24 Inches From The Back Of Curb.
The detectible warnings on the curb ramps shall comply with ADA sections 4.29.2 and 4.7.7.

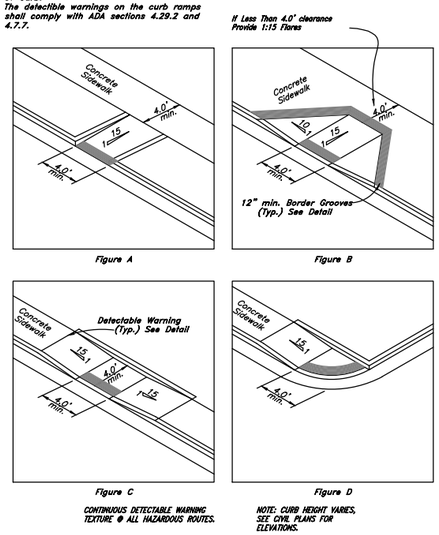

CONTINUOUS DETECTABLE WARNING TEXTURE @ ALL HAZARDOUS ROUTES.

NOTE: CURB HEIGHT VARIES, SEE CIVIL PLANS FOR ELEVATIONS.

Typical Handicap Ramp Detail

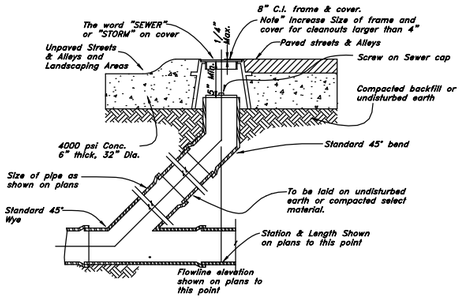

Sewer, Storm, and Roof Drain Cleanout Detail

NOT TO SCALE

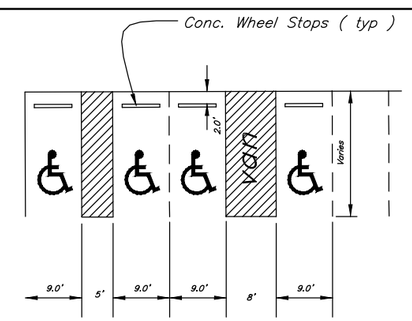

Typical Handicap Stall Detail

No Scale

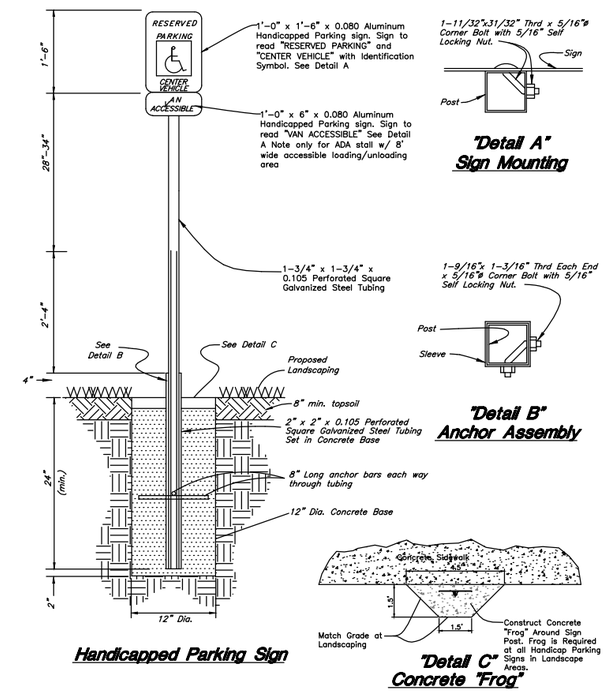

CONSTRUCTION DETAILS

CRSA MWL

UNIFIED STATE LAB MODULE 2

Schematic Design Submittal

August 26, 2013

CD500

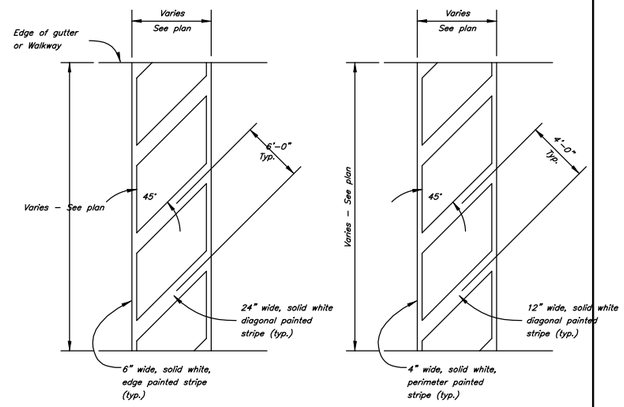

CROSSWALK **NO PARKING**

Striping

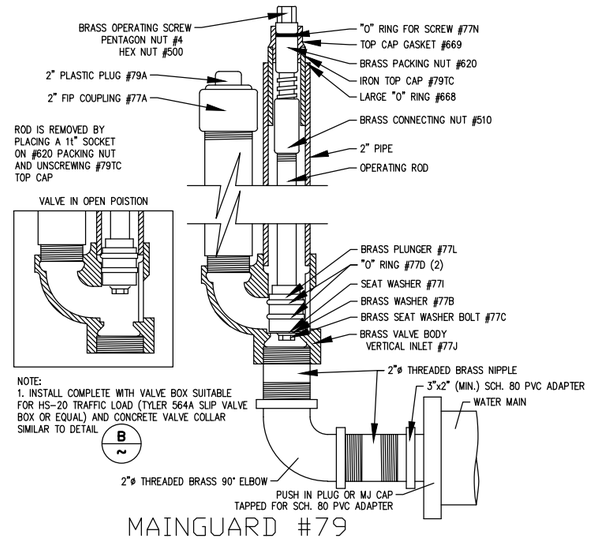

NOTE:
1. INSTALL COMPLETE WITH VALVE BOX SUITABLE FOR HS-20 TRAFFIC LOAD (TYLER 564A SLIP VALVE BOX OR EQUAL) AND CONCRETE VALVE COLLAR SIMILAR TO DETAIL B/~

MAINGUARD #79
BLOW-OFF HYDRANT E/2

N.T.S.

This detail as prepared by the Design Professional as an instruments of service shall remain the property of the Design Professional. The Design Professional shall retain all common law, statutory and other reserved rights, including the copyright thereto.

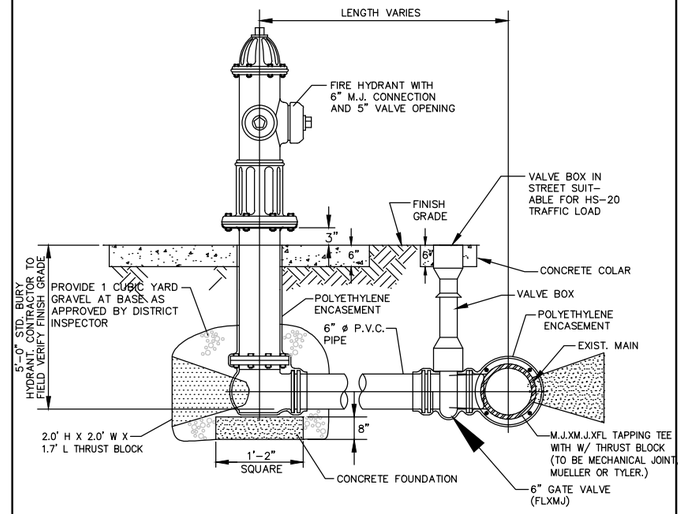

FIRE HYDRANT CONNECTION DETAIL C/–

N.T.S. TB-208

This detail as prepared by the Design Professional as an instruments of service shall remain the property of the Design Professional. The Design Professional shall retain all common law, statutory and other reserved rights, including the copyright thereto.

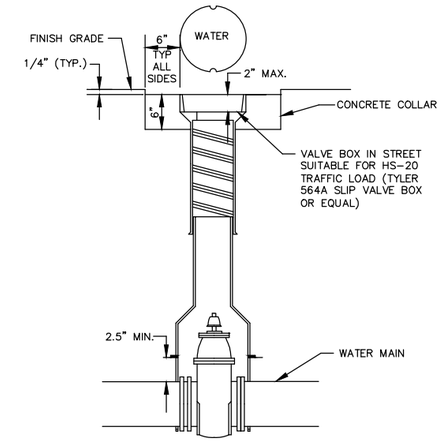

TYPICAL VALVE BOX B/–

N.T.S. TB-204

This detail as prepared by the Design Professional as an instruments of service shall remain the property of the Design Professional. The Design Professional shall retain all common law, statutory and other reserved rights, including the copyright thereto.

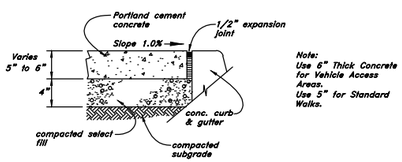

CROSS SECTION

Concrete Sidewalk

NOT TO SCALE

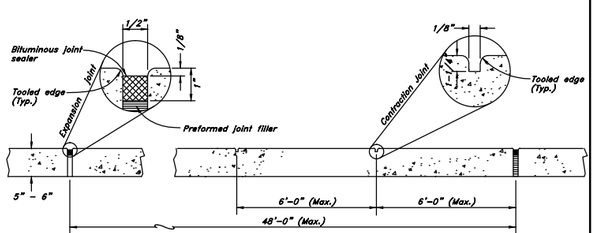

ELEVATION

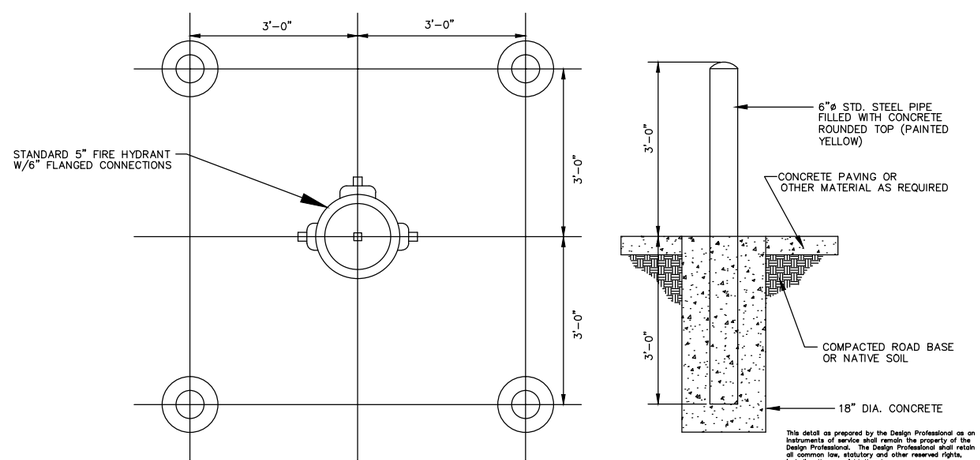

PLAN SECTION

FIRE HYDRANT WITH STANCHIONS DETAIL F/2

N.T.S. TB-211

This detail as prepared by the Design Professional as an instruments of service shall remain the property of the Design Professional. The Design Professional shall retain all common law, statutory and other reserved rights, including the copyright thereto.

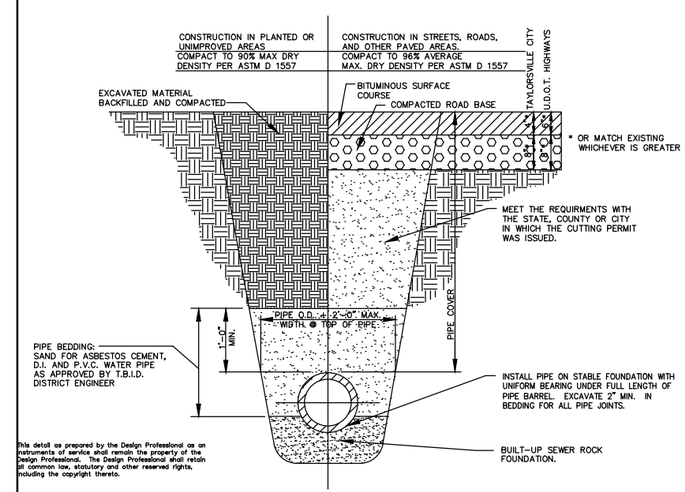

TYPICAL WATER TRENCH SECTION @ GRADE A/–

N.T.S. TB-201

This detail as prepared by the Design Professional as an instruments of service shall remain the property of the Design Professional. The Design Professional shall retain all common law, statutory and other reserved rights, including the copyright thereto.

CONSTRUCTION DETAILS

CRSA MWL

UNIFIED STATE LAB MODULE 2

Schematic Design Submittal

August 26, 2013

CD501

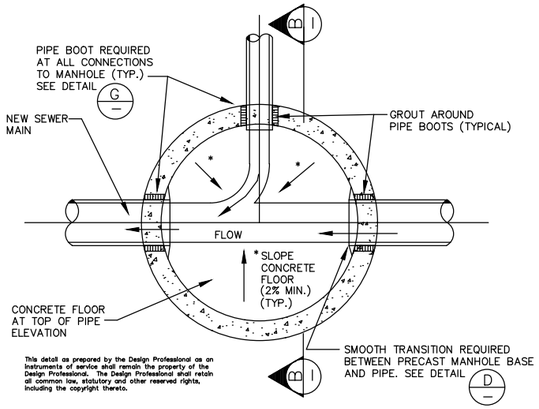

This detail as prepared by the Design Professional as an Instruments of service shall remain the property of the Design Professional. The Design Professional shall retain all common law, statutory and other reserved rights, including the copyright thereto.

TYPICAL PRECAST MANHOLE PLAN (A)

N.T.S. TB-104-A

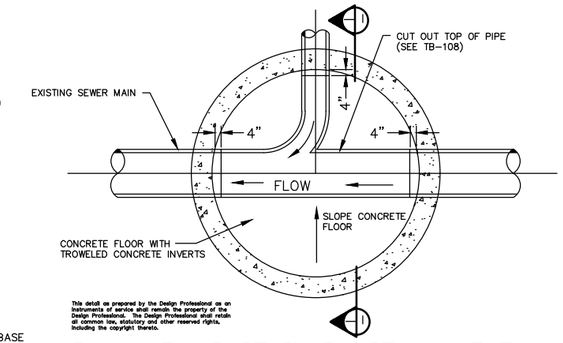

This detail as prepared by the Design Professional as an Instruments of service shall remain the property of the Design Professional. The Design Professional shall retain all common law, statutory and other reserved rights, including the copyright thereto.

PLAN-NEW CAST IN PLACE MANHOLE ON EXISTING SEWER LINE (H)

N.T.S. TB-107 (SEE ALSO TB-108)

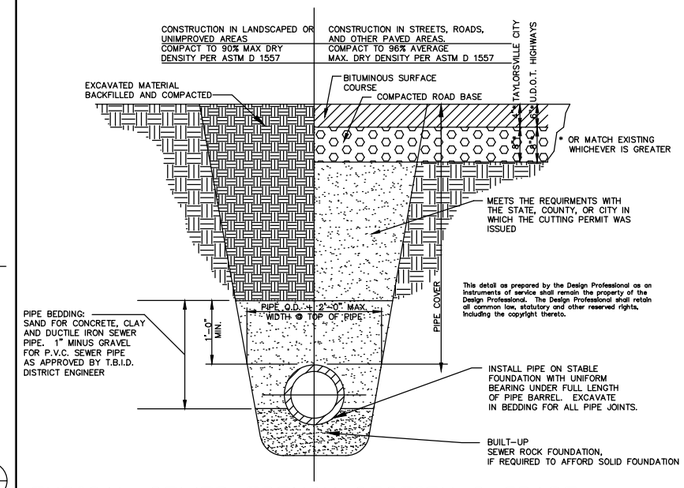

This detail as prepared by the Design Professional as an Instruments of service shall remain the property of the Design Professional. The Design Professional shall retain all common law, statutory and other reserved rights, including the copyright thereto.

TYPICAL SEWER TRENCH SECTION @ GRADE (C)

N.T.S. TB-101

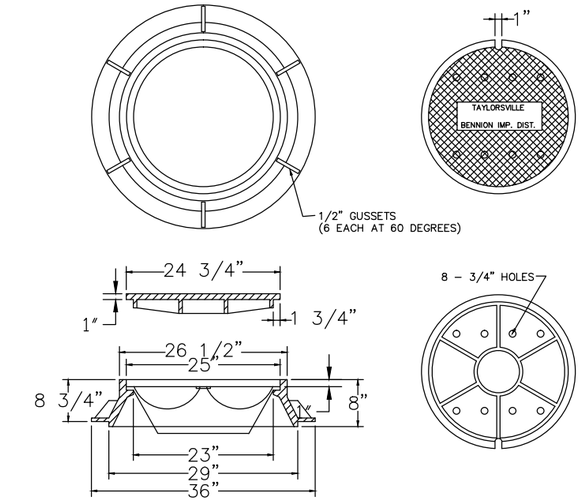

This detail as prepared by the Design Professional as an Instruments of service shall remain the property of the Design Professional. The Design Professional shall retain all common law, statutory and other reserved rights, including the copyright thereto.

MANHOLE RING AND COVER (F)

N.T.S. TB-104-C

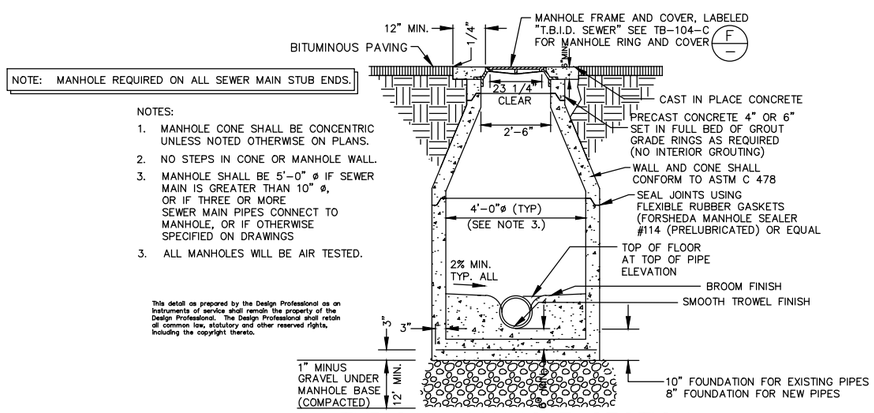

NOTES:

1. MANHOLE CONE SHALL BE CONCENTRIC UNLESS NOTED OTHERWISE ON PLANS.
2. NO STEPS IN CONE OR MANHOLE WALL.
3. MANHOLE SHALL BE 5'-0" ø IF SEWER MAIN IS GREATER THAN 10" ø, OR IF THREE OR MORE SEWER MAIN PIPES CONNECT TO MANHOLE, OR IF OTHERWISE SPECIFIED ON DRAWINGS
3. ALL MANHOLES WILL BE AIR TESTED.

This detail as prepared by the Design Professional as an Instruments of service shall remain the property of the Design Professional. The Design Professional shall retain all common law, statutory and other reserved rights, including the copyright thereto.

TYPICAL MANHOLE SECTION (B)

N.T.S. TB-104-B (SEE ALSO TB-105)

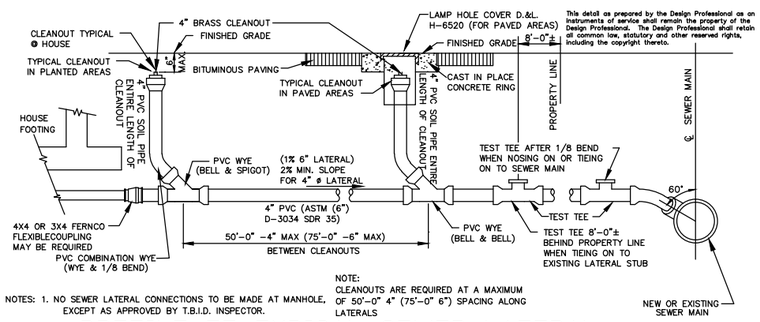

NOTES: 1. NO SEWER LATERAL CONNECTIONS TO BE MADE AT MANHOLE, EXCEPT AS APPROVED BY T.B.I.D. INSPECTOR.

NOTE: CLEANOUTS ARE REQUIRED AT A MAXIMUM OF 50'-0" 4" (75'-0" 6") SPACING ALONG LATERALS

This detail as prepared by the Design Professional as an Instruments of service shall remain the property of the Design Professional. The Design Professional shall retain all common law, statutory and other reserved rights, including the copyright thereto.

PROFILE OF TYPICAL SEWER LATERAL (E)

N.T.S. TB-102

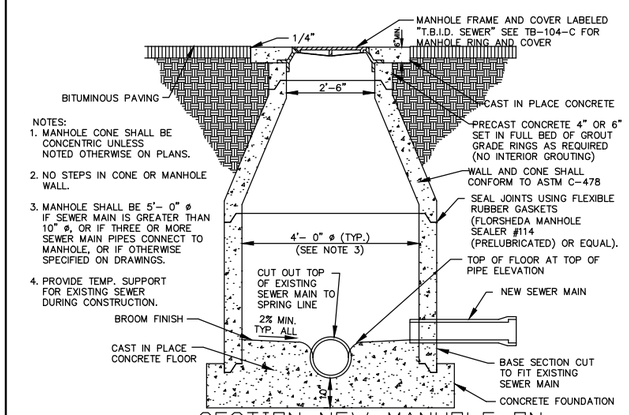

NOTES:

1. MANHOLE CONE SHALL BE CONCENTRIC UNLESS NOTED OTHERWISE ON PLANS.
2. NO STEPS IN CONE OR MANHOLE WALL.
3. MANHOLE SHALL BE 5'- 0" ø IF SEWER MAIN IS GREATER THAN 10" ø, OR IF THREE OR MORE SEWER MAIN PIPES CONNECT TO MANHOLE, OR IF OTHERWISE SPECIFIED ON DRAWINGS.
4. PROVIDE TEMP. SUPPORT FOR EXISTING SEWER DURING CONSTRUCTION.

This detail as prepared by the Design Professional as an Instruments of service shall remain the property of the Design Professional. The Design Professional shall retain all common law, statutory and other reserved rights, including the copyright thereto.

SECTION-NEW MANHOLE ON EXISTING SEWER LINE (I)

N.T.S.

CONSTRUCTION DETAILS

CRSA MWL

UNIFIED STATE LAB MODULE 2

Schematic Design Submittal

August 26, 2013

CD502

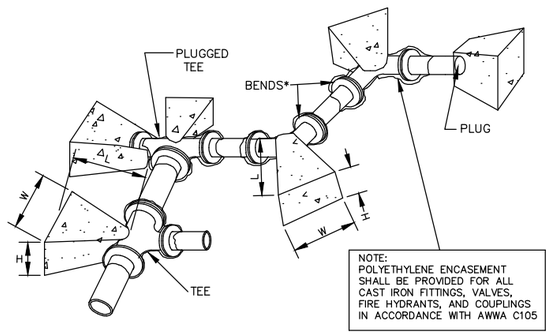

THRUST BLOCK SCHEDULE			
SOIL BEARING PRESSURE = 1,500 PSF TEST PRESSURE = 200 PSI			
FITTING	WIDTH	HEIGHT	LENGTH
8" 90° BEND	3.50'	3.50'	3.00'
8" TEE/DEAD (NATIVE SOIL)	3.00'	3.00'	2.50'

This detail as prepared by the Design Professional as an instruments of service shall remain the property of the Design Professional. The Design Professional shall retain all common law, statutory and other reserved rights, including the copyright thereto.

THRUST BLOCKING

N.T.S. TB-202 D —

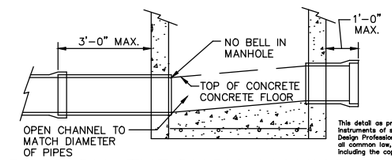

This detail as prepared by the Design Professional as an instruments of service shall remain the property of the Design Professional. The Design Professional shall retain all common law, statutory and other reserved rights, including the copyright thereto.

SECTION THROUGH MANHOLE BASE

N.T.S. TB-105 (SEE ALSO TB-104-A, TB-104-B) D —

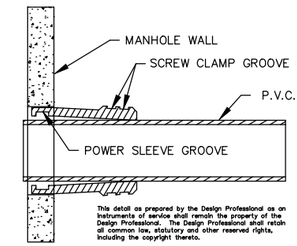

NOTES:

1. 2 SCREW CLAMPS REQUIRED ONLY ON PIPE LARGER THAN 14" O.D.
2. WORK AND MATERIALS SHALL CONFORM TO ASTM C923.
3. FOR CONCRETE PIPE, A RUBBER BOOT IS REQUIRED.

This detail as prepared by the Design Professional as an instruments of service shall remain the property of the Design Professional. The Design Professional shall retain all common law, statutory and other reserved rights, including the copyright thereto.

CONNECTION OF P.V.C. SEWER PIPE TO PRE-CAST MANHOLE BASE

N.T.S. TB-106 G —

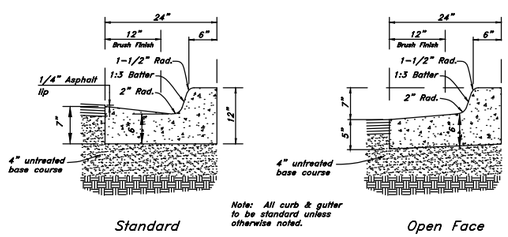

Typical Section - 24" Curb & Gutter

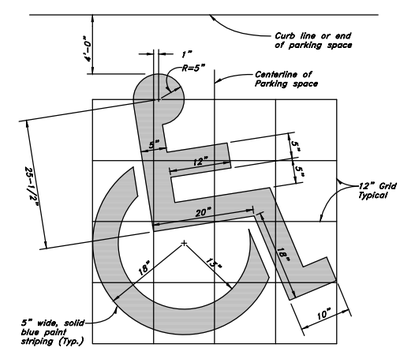

Handicap Symbol

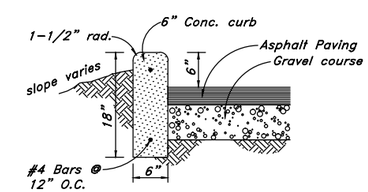

Typical Curb Wall Detail

CONSTRUCTION DETAILS

CRSA MWL

UNIFIED STATE LAB MODULE 2

Schematic Design Submittal

August 26, 2013

CD503

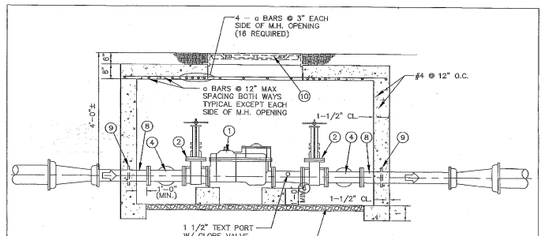

SECTION – SIDE VIEW

METER BOX DETAIL

N.T.S. TB-222 (SEE ALSO TB-221, TB-225)

This detail as prepared by the Design Professional as an instrument of service shall remain the property of the Design Professional. The Design Professional shall retain all common law, statutory and other reserved rights, including the copyright thereto.

12/97

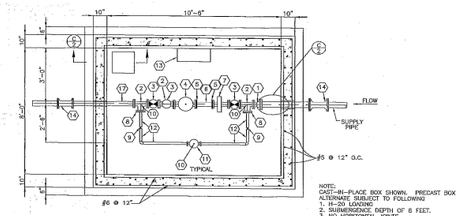

NOTE:
CAST-IN-PLACE BOX SHOWN. PRECAST BOX ALTERNATE SUBJECT TO FOLLOWING
1. H-20 LOADING
2. SUBMERGENCE DEPTH OF 8 FEET.
3. NO HORIZONTAL JOINTS THROUGH THE PIPE OPENINGS.
4. WATER STOP @ WALL/FLOOR JOINT.

SECTION – SIDE VIEW

MARK	QUANITY	DESCRIPTION
1	1	4" x 3" FL REDUCER
2	3	3" FL TEE
3	3	3" FL BRASS BALL VALVE
4	1	METER
5	2	3" VICTAULIC FLANGE ADAPTOR
6	1	3" x 1'-0" LONG GROOVED END DI PIPE (CLASS 55 MIN.)
7	1	3" FL PLATE STRAINER
8	2	3" FL x 1 1/2" THREADED
9	2	1 1/2" THREADED BRASS BALL VALVE
10	4	PIPE SUPPORT
11	1	1 1/2" FL BYPASS METER
12	—	1 1/2" COPPER PIPE
13	—	POLYPROPYLENE MANHOLE STEPS
14	2	M/ SOLID SLEEVES W/ MEGA LUG RESTRAINTS
15	1	3" FL x 3" THREADED
16	1	3" THREADED BRASS PLUG
17	1	3" FL x PE DI PIPE
18	1	4" FL x PE DI PIPE

This detail as prepared by the Design Professional as an instrument of service shall remain the property of the Design Professional. The Design Professional shall retain all common law, statutory and other reserved rights, including the copyright thereto.

3" METER VAULT

N.T.S. TB-222-A

12/97

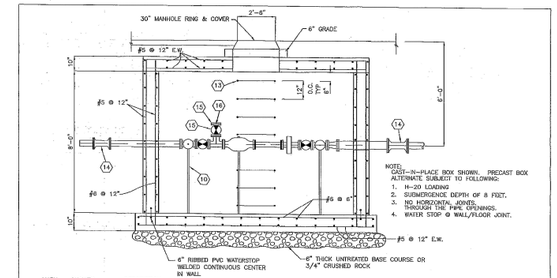

NOTE:
CAST-IN-PLACE BOX SHOWN. PRECAST BOX ALTERNATE SUBJECT TO FOLLOWING:
1. H-20 LOADING
2. SUBMERGENCE DEPTH OF 8 FEET.
3. NO HORIZONTAL JOINTS THROUGH THE PIPE OPENINGS.
4. WATER STOP @ WALL/FLOOR JOINT.

MARK	QUANITY	DESCRIPTION
1	1	4" x 3" FL REDUCER
2	3	3" FL TEE
3	3	3" FL BRASS BALL VALVE
4	1	METER
5	2	3" VICTAULIC FLANGE ADAPTOR
6	1	3" x 1'-0" LONG GROOVED END DI PIPE (CLASS 55 MIN)
7	1	3" FL PLATE STRAINER
8	2	3" FL x 1 1/2" THREADED
9	2	1 1/2" THREADED BRASS BALL VALVE
10	4	PIPE SUPPORT PER DETAIL
11	1	1 1/2" FL BYPASS METER
12	—	1 1/2" COPPER PIPE
13	—	POLYPROPYLENE MANHOLE STEPS
14	2	M/ SOLID SLEEVES W/ MEGA LUG RESTRAINTS
15	1	3" FL x 3" THREADED
16	1	3" THREADED BRASS PLUG
17	1	3" FL x PE DI PIPE
18	1	4" FL x PE DI PIPE

This detail as prepared by the Design Professional as an instrument of service shall remain the property of the Design Professional. The Design Professional shall retain all common law, statutory and other reserved rights, including the copyright thereto.

3" METER VAULT

N.T.S. TB-222-B

9/98

ADJUSTABLE PIPE SADDLE SUPPORT SCHEDULE DIMENSIONS IN INCHES					
PIPE	A	B	C	D	
				MINIMUM	MAXIMUM
2 1/2	2 1/2	1 1/2	9	6	13
3	2 1/2	1 1/2	9	8 1/2	13 1/2
3 1/2	2 1/2	1 1/2	9	8 1/2	13 1/2
4	3	2 1/2	9	9 1/2	14
6	3	2 1/2	9	10 1/2	15 1/2
8	3	2 1/2	9	11 1/2	16 1/2
10	3	2 1/2	9	13 1/2	18 1/2
12	3	2 1/2	9	15	19 1/2

USE 2 1/2" SUPPORTS FOR PIPE LESS THAN 2 1/2"ø

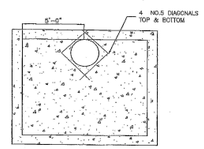

DECK SLAB PLAN VIEW

3" METER VAULT

N.T.S. TB-222-C

This detail as prepared by the Design Professional as an instrument of service shall remain the property of the Design Professional. The Design Professional shall retain all common law, statutory and other reserved rights, including the copyright thereto.

12/97

ADJUSTABLE PIPE SADDLE SUPPORT SCHEDULE DIMENSIONS IN INCHES					
PIPE	A	B	C	D	
				MINIMUM	MAXIMUM
2 1/2	2 1/2	1 1/2	9	6	13
3	2 1/2	1 1/2	9	8 1/2	13 1/2
3 1/2	2 1/2	1 1/2	9	8 1/2	13 1/2
4	3	2 1/2	9	9 1/2	14
6	3	2 1/2	9	10 1/2	15 1/2
8	3	2 1/2	9	11 1/2	16 1/2
10	3	2 1/2	9	13 1/2	18 1/2
12	3	2 1/2	9	15	19 1/2

USE 2 1/2" SUPPORTS FOR PIPE LESS THAN 2 1/2"ø

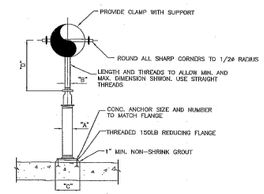

NOTES:
1. HOT DIP GALVANIZE AFTER FABRICATION
2. PIPE SHALL BE SCHEDULE 40

ADJUSTABLE PIPE SUPPORT

3" METER VAULT

N.T.S. TB-222-D

12/97

ADJUSTABLE PIPE SADDLE SUPPORT SCHEDULE DIMENSIONS IN INCHES					
PIPE	A	B	C	D	
				MINIMUM	MAXIMUM
2 1/2	2 1/2	1 1/2	9	6	13
3	2 1/2	1 1/2	9	8 1/2	13 1/2
3 1/2	2 1/2	1 1/2	9	8 1/2	13 1/2
4	3	2 1/2	9	9 1/2	14
6	3	2 1/2	9	10 1/2	15 1/2
8	3	2 1/2	9	11 1/2	16 1/2
10	3	2 1/2	9	13 1/2	18 1/2
12	3	2 1/2	9	15	19 1/2

USE 2 1/2" SUPPORTS FOR PIPE LESS THAN 2 1/2"ø

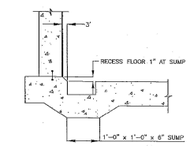

3" METER VAULT

N.T.S. TB-222-E

This detail as prepared by the Design Professional as an instrument of service shall remain the property of the Design Professional. The Design Professional shall retain all common law, statutory and other reserved rights, including the copyright thereto.

12/97

ADJUSTABLE PIPE SADDLE SUPPORT SCHEDULE DIMENSIONS IN INCHES					
PIPE	A	B	C	D	
				MINIMUM	MAXIMUM
2 1/2	2 1/2	1 1/2	9	6	13
3	2 1/2	1 1/2	9	8 1/2	13 1/2
3 1/2	2 1/2	1 1/2	9	8 1/2	13 1/2
4	3	2 1/2	9	9 1/2	14
6	3	2 1/2	9	10 1/2	15 1/2
8	3	2 1/2	9	11 1/2	16 1/2
10	3	2 1/2	9	13 1/2	18 1/2
12	3	2 1/2	9	15	19 1/2

USE 2 1/2" SUPPORTS FOR PIPE LESS THAN 2 1/2"ø

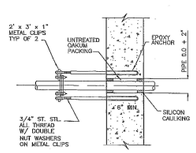

THRUST RESTRAINT

3" METER VAULT

N.T.S. TB-222-F

This detail as prepared by the Design Professional as an instrument of service shall remain the property of the Design Professional. The Design Professional shall retain all common law, statutory and other reserved rights, including the copyright thereto.

12/97

NOTE: Use 4" Meter with 1.5" bypass

CONSTRUCTION DETAILS

CRSA MWL

UNIFIED STATE LAB MODULE 2

Schematic Design Submittal

August 26, 2013

CD504

GENERAL

1. The structural notes are intended to complement the project specifications. Specific notes and details in the drawings shall govern over the structural notes and typical details.
2. Typical details and sections shall apply where specific details are not shown.
3. The contractor shall verify all site conditions and dimensions. If actual conditions differ from those shown in the contract drawings, the contractor shall immediately notify the architect/engineer before proceeding with the fabrication or construction of any affected elements.
4. Drawings shall not be scaled for the purpose of preparing shop drawings or for construction. Where dimensions on the design drawings are not provided or inferred, the contractor may scale drawings only to estimate member lengths for the purpose of bidding.
5. Changes to these contract drawings may be made only by an authorized representative of Dunn Associates, Inc. Dunn Associates, Inc. shall not be held responsible or liable for any claims arising directly or indirectly from changes made without written authorization by an authorized representative of Dunn Associates, Inc.
6. Omissions or conflicts between the contract drawings and/or specifications shall be brought to the attention of the architect/engineer before proceeding with any work involved. In case of conflict, follow the most stringent requirement as directed by the architect/engineer at no additional cost to the owner.
7. The contractor shall submit a written request to the architect/engineer before proceeding with any changes, substitutions, or modifications. Any work done by the contractor before receiving written approval will be at the contractor's risk.
8. The contractor shall coordinate with all trades any items that are to be integrated into the structural system such as openings, penetrations, mechanical and electrical equipment, etc. Sizes and locations of mechanical and other equipment that differs from those shown on the contract drawings shall be reported to the architect/engineer. Contractor shall take measures as required to insure that construction loads shall not exceed design loads for the structure.
9. The contractor shall be responsible for means, methods, techniques, sequences, and procedures in order to comply with the contract drawings and specifications. The contractor shall provide adequate shoring and bracing as required for the chosen method of erection. Shoring and bracing shall remain in place until final connections for the permanent members are completed. The building shall not be considered stable until all connections are completed. Walls shall not be considered self-supporting and shall be braced until the floor/roof system is completed.
10. Site observations by a field representative of Dunn Associates, Inc. shall not be construed as approval of construction, the procedures, nor special inspection.
11. Detailing and shop drawing production for structural elements will require information (including dimensions) contained in the architectural, structural and/or other consultants' drawings. The structural drawings shall be used in conjunction with the architectural and other consultant's drawings. See the Architectural Drawings for dimensions, doors, windows, non-bearing interior and exterior walls, elevations, slopes, stairs, curbs, drains, recesses, depressions, railings, waterproofing, finishes, chamfers, kerfs, etc.
12. The Contractor may choose to submit shop drawings and submittals for review electronically. The Contractor may do this provided a minimum of one hard copy set is submitted for review. The submittal will be stamped as received by Dunn Associates, Inc. when the hard copy is received by our office. Hard copies of small submittals need not be submitted if the Contractor receives the approval for this exception by the Engineer of Record.
13. Review of shop drawing submittals by Dunn Associates, Inc. is for general compliance only and is not intended for approval. The shop drawing review shall not relieve the contractor from the responsibility of completing the project according to the contract documents.
14. Shop drawings made from reproductions of the structural drawings will be rejected unless the contractor signs a release agreement prior to the shop drawings being reviewed. The contractor may also obtain electronic files of the plan sheets after signing a release agreement. Electronic files of the detail sheets and schedule sheets will not be made available.
15. All work shall be done in accordance with OSHA requirements. Potential conflicts between these documents and OSHA requirements shall be brought to the attention of the structural engineer before proceeding with the work.

BASIS OF DESIGN

1.	Governing Building Code	International Building Code 2012
2.	Seismic Risk Category	II
3.	Floor Live Loads	
3.1.	Uniformly Distributed Loads	
3.1.1.	Offices + Partitions	80 psf + 20 psf
3.1.2.	Laboratories	125 psf
3.1.3.	Corridors Above Main Floor	80 psf
3.1.4.	Mechanical Rooms	150 psf
3.1.5.	Light Storage	125 psf
3.1.6.	High Density Storage	250 psf
3.2.	Concentrated Loads, all areas	2000 lbs
4.	Roof Snow Load	
4.1.	Ground Snow Load	Pg = 43 psf
4.2.	Flat Roof Snow Load	Pf = 30 psf
4.3.	Snow Exposure Factor	Ce = 1.0
4.4.	Thermal Factor	Ct = 1.0
4.5.	Snow Load Importance Factor	Is = 1.0
5.	Wind Load	
5.1.	Basic Wind Speed (3 Second Gust)	115 mph
5.2.	Wind Directionality Factor	Kd = 0.85
5.3.	Wind Exposure Category	C
5.4.	Wind Topographic Factor	Kzt = 1.0
5.5.	Internal Pressure Coefficient	± 0.18
6.	Seismic Design Criteria	
6.1.	Mapped Spectral Response Accelerations	
6.1.1.	Short Period Acceleration	SS = 1.476
6.1.2.	1-Second Acceleration	S1 = 0.490
6.2.	Spectral Response Coefficients	
6.2.1.	Short Period Acceleration	SDS = 0.984
6.2.2.	1-Second Acceleration	SD1 = 0.493
6.2.	Site Class (Soil Profile)	D
6.3.	Seismic Importance Factor	1.0
6.4.	Seismic Design Category	D
6.5.	Effective Structural Seismic Weight	W
6.6.	Basic Seismic Force Resisting System	Steel Buckling - Restrained Brace Frames
6.6.1.	Response Modification Coefficient	R = 8
6.6.2.	System Overstrength Factor	Ωo = 2.5
6.6.3.	Deflection Amplification Factor	CD = 5
6.6.4.	Design Base Shear	V = Cs*W = 0.04W
6.7.	Analysis Procedure	Modal Response Spectrum
7.	Serviceability Criteria	
7.1.	Interstory Seismic/Wind Drift	See Drift Tables on S002

7.2. Deflection Limits	Total	Live/Snow
Floor	L/360	L/480
Roof	L/240	L/360
Perimeter	----	L/600(3/8" max)

FOUNDATION

1. Soils Report by: GSH Job No # 068-13a-07
2. Soil Bearing Pressure: 3,000 psf, on 24 inches minimum of compacted structural fill.
3. Frost Protection: 30 inches minimum
4. Lateral Soil Pressure Fluid Equivalent Density:
   - 4.1. Active — 45 pcf (retaining walls)
   - 4.2. At Rest — 60pcf (rigid foundation walls)
   - 4.3. Passive — 300 pcf
   - 4.4. Dynamic (seismic) Soil Pressure: M-O method — TBD
5. Coefficient of Friction — 0.4
6. The soils engineer shall review all excavations and fill placement prior to placing concrete.

EARTHWORK

1. Clearing: The entire building area shall be cleared of vegetation, topsoil, construction debris, disturbed soil, undocumented fill and other unsuitable materials. Unsuitable materials, such as the existing underground utilities, should also be removed from beneath the proposed construction.
2. Contractor is to provide temporary shoring for excavations as required.
3. Contractor is to provide measures necessary to prevent damage to or settlement of new or existing construction and utilities on or adjacent to project site.
4. Contractor is to provide dewatering as required to protect the site from flooding.
5. Proof rolling: The natural undisturbed soil below all footings shall be proof rolled prior to placing concrete. Remove all soft spots and replace with compacted structural fill.
6. Compacted structural fill: All fill material shall be a well-graded granular material with a maximum size less than 3" and with not more than 15% passing a #200 sieve. It shall be compacted to 95% of the maximum laboratory density as determined by ASTM D 1557. All fill shall be tested. Compacted structural fill shall be placed in lifts not exceeding 8" in uncompacted thickness. The on-site silt is not suitable for use as fill in building areas but may be used in pavement, flatwork and landscape areas.
7. Consult the project specifications and soils report for further earthwork requirements. The soils engineer shall review all excavations and fill placement prior to placing concrete.

GENERAL STRUCTURAL NOTES

1/2" = 1'-0"

CONCRETE

1. Concrete shall be supplied in accordance with ACI 318 and the following requirements:

Concrete Use	Comp. Strength f'c (psi)	Exposure Classes	Cement Type [a]	Max. W/CM Ratio	Max. Flyash	Air Content [b]	Aggregate Size, Max.	Slump Limit [c]
Footings [d]	4500	F1, S0, P0, C0	I, II	0.45	50%	5%	1 1/2"	4"
Mat Footings [d]	4500	F1, S0, P0, C0	I, II	0.45	50%	5%	1 1/2"	4"
Foundation Walls	4500	F1, S0, P0, C1	I, II	0.45	25%	5%	3/4"	4"
Interior Slabs on Grade	3000	F0, S0, P0, C0	I, II	0.50	25%	1.5%	1"	4"
Normal Wt. Concrete on Steel Deck	3500	F0, S0, P0, C0	I, II	0.50	25%	1.5%	3/4"	4"
Site Concrete [e] (reinforced)	5000	F2, S0, P0, C2	I, II	0.40	25%	6%	3/4"	4"
Site Concrete [e] (unreinforced)	4500	F2, S0, P0, C0	I, II	0.45	25%	6%	3/4"	4"

Table Footnotes:

a. Cement to comply with ASTM C150. Use Type V cement where required by soils report.

b. Air content ± 1.5%, measured at point of final placement. Air-entraining admixtures shall comply with ASTM C260 (when used). Calcium chloride shall not be added to the concrete mix. Unreinforced concrete slabs on grade may have calcium chloride not exceeding one percent. Air entrainment shall be adjusted for the use of admixtures and fly ash.

c. Slump limit ± 1" applies to non-plasticized concrete. Test shall be conducted prior to adding plasticizer if used.

d. The required compressive strength specified is permitted to be evaluated at 56 days instead of the standard 28 days for footing concrete with fly ash content exceeding 25%.

e. See civil drawings for site concrete requirements. In the absence of information, use values listed.

2. Materials unless noted otherwise:
   - 2.1. Normal Weight aggregates----------ASTM C33
   - 2.3. Fly Ash, Class F Pozzolan----------ASTM C618
   - 2.4. Reinforcing Steel
     - 2.4.1. General----------ASTM 615 Grade 60
     - 2.4.2. Columns, Beams, Shearwalls----------ASTM A706-60ksi
       ASTM A615 is permitted if mill certifications are submitted showing that actual yield strength does not exceed the specified strength by more than 18000 psi and the ratio of tensile to yield strength is greater than 1.25.
   - 2.5. Deformed Bar Anchors (DBA) ----------ASTM A496
   - 2.6. Headed Stud Anchors (HSA) ----------ASTM A108
   - 2.7. Anchor Bolts: See steel section of general notes.
   - 2.8. No aluminum conduit or product containing aluminum or any other material injurious to concrete shall be embedded in concrete.
3. Reinforce slab on grade as follows:
   - 3.1. Macro synthetic fibers "coarse fibers" (per ASTM Subcommittee C09.42), made from virgin polyolefin, with equivalent diameter between 0.016" and 0.05", having minimum aspect ratio (length/equivalent diameter) of 50, at a minimum rate of 4 lb / cubic yard. Fibers above finished slab shall not be burned off. Pour slab directly on vapor barrier.
4. Reinforce composite slabs over metal deck with the following welded wire reinforcement (minimum). Welded wire reinforcement shall be placed 1" to 1 1/2" below the top of the slab:
   - 4.1. Slabs 6 1/4" or thinner — 6" x 6" - W1.4/W1.4
   - 4.2. Slabs 7" or thinner, but thicker than 6 1/4" — 6" x 6" - W2.1/W2.1
   - 4.3. Slabs thicker than 7" — 6" x 6" - W2.9/W2.9
5. In composite slabs, welded wire reinforcement may be substituted with macro synthetic fibers "coarse fibers" (per ASTM Subcommittee C09.42), made from virgin polyolefin, with equivalent diameter between 0.016" and 0.05", having minimum aspect ratio (length/equivalent diameter) of 50, at a minimum rate of 4 lb / cubic yard. Fibers above finished slab shall not be burned off.
6. The contractor shall be responsible for the design, detailing, care, placement and removal of all formwork and shores.
   - 6.1. Supporting forms and shoring shall not be removed until structural members have acquired sufficient strength to safely support their own weight and any construction load to which they may be subjected. In no case, however, shall forms and shoring be removed in less than 24 hours after concrete placement.
   - 6.2. Suspended slabs shall be re-supported after form removal until concrete reaches its 28-day specified compressive strength.
7. Reinforcement shall have the following concrete cover:---------- Clear Cover
   - 7.1. Cast-in-place Concrete
     - 7.1.1. Cast against and permanently exposed to earth----------3"
     - 7.1.2. Formed concrete exposed to earth or weather:
       #6 thru #18 bars----------2"
       #5 and smaller bars----------1 1/2"
     - 7.1.3. Concrete not exposed to weather or in contact with ground:
       Slabs, Walls, Joists; #11 bars and smaller ----------3/4"
       Beams, Columns: Primary Reinforcement, Ties,----------1 1/2"
       Stirrups, Spirals
   - 7.2. Reservoir Concrete
     - 7.2.1. All bars----------2"
8. Construction Joints and Control Joints:
   - 8.1. Provide a beveled 2" x 4" x continuous keyway in all horizontal and vertical construction joints including between top of footing and foundation walls. In addition, all joints shall be intentionally roughened to a full amplitude of approximately 1/4".
   - 8.2. Control joints shall be installed in slabs on grade so the length to width ratio of the slab is no more than 1.25:1. Control joints shall be completed within 12 hours of concrete placement. Control joints may be installed by either:
     - 8.2.1. Saw cut with depth of 1/4 the thickness of the slab
     - 8.2.2. Tooled joints with depth of 1/4 the thickness of the slab
   - 8.3. Install construction or control joints in slabs on grade at a spacing not to exceed 30 times the slab thickness in any direction, unless noted otherwise. Construction joints shall not exceed a distance of 125'-0" on center in any direction.
9. Construction
   - 9.1. Use chairs or other support devices recommended by the CRSI to support bar and tie reinforcement bars and WWF prior to placing concrete. WWF shall be continuously supported at 36" on center maximum. Reinforcing steel for slabs on grade shall be adequately supported on precast concrete units. Lifting the reinforcing off the grade during placement of concrete is not permitted.
   - 9.2. Contractor shall coordinate placement of all openings, curbs, dowels, sleeves, conduits, bolts, inserts and other embedded items prior to concrete placement.
   - 9.3. All embeds and dowels shall be securely tied to formwork or to adjacent reinforcing prior to the placement of concrete.
   - 9.4. No pipes, ducts, sleeves, etc. shall be placed in structural concrete unless specifically detailed or approved by the structural engineer. Penetrations through walls when approved shall be built into the wall prior to concrete placement. Penetrations will not be allowed in footings or grade beams unless detailed. Piping shall be routed around these elements and footings stepped to avoid piping.
   - 9.5. Reinforcing bars shall not be welded unless specifically shown on drawings. In such cases, use only AWS standards. Do not substitute reinforcing bars for DBAs or HSAs.
   - 9.6. Top of concrete columns shall be flush (±1/4") with bottom of supported cast-in-place members.
10. Detailing:
    - 10.1. Lap splice lengths shall be detailed to comply with the "Reinforcing Bar Lap Splice Schedule" contained within the contract drawings.
      - 10.1.1. Do not splice stirrups and ties. Do not splice vertical bars in retaining walls unless specifically shown.
      - 10.1.2. At shearwall boundary elements and at moment frame beams to columns, lap lengths shall be increased by 25%.
      - 10.1.3. Splices may be made with mechanical splices capable of 125% tension capacity of the bar being spliced. Mechanical splices shall be the positive connecting type coupler and shall meet all ACI requirements. Use "Cadweld", "Lenton" Standard Couplers, "Bar-Lock" or equal with internal protector. If mechanical splices are used, splices or couplers on adjacent bars shall be staggered a minimum of 24" apart along the longitudinal axis of the reinforcing bars.
    - 10.2. At joints provide reinforcing dowels to match the member reinforcing, unless noted otherwise.
    - 10.3. At all discontinuous control or construction slab on grade joints, provide (2) #4 x 48".
    - 10.4. Provide corner bars at intersecting wall corners using the same bar size and spacing as the horizontal wall reinforcing.
    - 10.5. All vertical reinforcing shall be doweled to footings, or to the structure below with the same size and spacing as the vertical reinforcing for the element above. Dowels extending into footings shall terminate with a 90° standard hook and shall extend to within 4" of the bottom of the footing. Footing dowels (#8 bars and smaller) with hooks need not extend more than 20" into footings.
    - 10.6. In concrete shearwalls, the horizontal wall reinforcing shall terminate at ends of walls and openings into the far end of the jamb column with a 90° standard hook plus a 6 bar diameter extension. Horizontal wall reinforcing shall be continuous through construction and control joints.
    - 10.7. See details for reinforcing around miscellaneous openings. All recesses that interrupt reinforcing shall be reinforced the same as an opening.
    - 10.8. Reference ACI 315 for additional detailing requirements.
11. Contractor required to submit concrete mix design for review by the engineer prior to any placement of concrete.
12. Contractor shall refer to and follow the recommendations in ACI 305R for hot weather concreting and ACI 306R for cold weather concreting.
13. Contractor is not to backfill against retaining walls unless walls have achieved design strength or have been shored. Contractor is not to backfill against basement walls without placement of the main floor diaphragm unless the walls have been shored or approval of the EOR has been granted, or it has been noted otherwise on the design drawings.
14. Construction activity or storage of materials shall not take place on newly placed concrete for a minimum of 7 days after concrete placement.

GENERAL STRUCTURAL NOTES

1/2" = 1'-0"

POST-INSTALLED ANCHORS

1. Post-installed anchors shall only be used where specifically detailed or called for on the design drawings. If circumstances arise during construction where the Contractor desires to substitute a post-installed anchor in place of a cast-in-place anchor, the Contractor shall submit a formal written request for each circumstance to the Architect and Engineer for review.
2. Follow all ICC Evaluation Report and manufacturers' requirements and recommendations for post-installed anchor installation. Where conflicts may exist, the most stringent requirement applies.
3. Follow manufacturer and ICC evaluation report requirements for installation temperature of adhesive anchors. Adhesive anchors shall not be installed or cured outside of approved temperature ranges.
   - 3.1. Adhesive anchors in concrete (normal weight only) shall be
     - 4.1.1. HIT RE-500 SD by Hilti (ESR-2322)
     - 4.1.2. HIT HY-200 by Hilti (ESR-1987)
     - 4.1.3. SET-XP by Simpson (ESR-2508)
     - 4.1.4. AT-XP by Simpson (IAPMO ES ER-0263)
     - 4.1.5. PE1000+ by Powers Fasteners (ESR-2583) - 3/8" to 1 1/4" diameter only
5. Mechanical (Expansion) anchors
   - 5.1. Mechanical anchors in concrete shall be
     - 5.1.1. Kwik Bolt TZ by Hilti (ESR-1917)
     - 5.1.2. Kwik HUS-EZ by Hilti (ESR-3027)
     - 5.1.3. Strong-Bolt by Simpson (ESR-1771)
     - 5.1.4. Strong-Bolt 2 by Simpson (ESR-3037)
     - 5.1.5. Titen HD by Simpson (ESR-2713)
     - 5.1.6. Torq-cut by Simpson (ESR-2705)
     - 5.1.7. Trubolt+ by ITW Redhead (ESR-2427)
     - 5.1.8. Powers Wedge-Bolt+ by Powers (ESR-2526)
     - 5.1.9. Power-Stud+ SD1 by Powers (ESR-2818)
     - 5.1.10. Power-Stud+ SD2 by Powers (ESR-2502)
     - 5.1.11. Atomic+ Undercut by Powers (ESR-3067)
6. The Contractor may submit, for review and approval, the manufacturer's ICC evaluation report of alternate anchor systems. The alternate method shall provide minimum capacities equal to or greater than those in the above noted anchors. The alternate method shall be approved by the engineer of record prior to the substitution.
7. Special Inspection and Testing
   - 7.1. Special inspection shall be performed according to the requirements of the ICC evaluation report, per section 1705.3 of the IBC. Periodic inspection is allowed for mechanical anchors per section 6.6 of ICC-ES AC193.
   - 7.2. Testing shall be done according to the more stringent requirements of the ICC evaluation report and the values listed below.
     - 7.2.1. Adhesive Anchors in Concrete or Solid Grouted Masonry: 50% of anchors in non-redundant elements (e.g. column, brace connections, boundary steel, hold-downs) and 10% of anchors in redundant elements shall be tension tested at the following loads in kips:

Bar Size	Concrete
#3	5.3
#4	9.6
#5	14.9
#6	21.1
#7	28.8
#8	37.9
#9	48.0
#10	61.0
#11	74.9

     - 7.2.2. Mechanical anchors shall be tension tested to twice the allowable tension load listed in the ICC evaluation report.

MASONRY

1. Materials, unless noted otherwise:
   - 1.1. Concrete Masonry Units (CMU): Medium weight (115pcf) (minimum unit strength of 1900 psi) f'm = 2000 psi
   - 1.2. Mortar: Type "S" (1800 psi minimum compressive strength)
   - 1.3. Grout shall attain a minimum compressive strength of 2000 psi at 28 days.
   - 1.4. Reinforcing Steel----------ASTM 615 Grade 60 (Fy = 60 ksi)
   - 1.5. Deformed Bar Anchors (DBA)----------ASTM A496
   - 1.6. Headed Stud Anchors (HSA)----------ASTM A108
   - 1.7. Anchor Bolts----------ASTM A307
   - 1.8. Heavy hex nuts and hardened washers----------ASTM A563
2. Reinforcement shall have the following cover:
   - 2.1. Joint reinforcement shall have not less than 5/8" mortar coverage from the exposed face.
   - 2.2. Other reinforcement shall have a minimum coverage of one bar diameter over all the bars, but not less than 3/4". When masonry is exposed to soil, minimum coverage shall be 1 1/2".
3. Construction Requirements
   - 3.1. All units shall be laid with full mortar beds on the face shells. All head joints shall be filled solidly with mortar for a distance in from the face of the units not less than the thickness of the longitudinal face shells. Cells which are to be grouted shall have full head joints.
   - 3.2. Masonry walls, beams and columns shall be constructed with running bond unless noted otherwise.
   - 3.3. Solid grouting of walls is unacceptable except where specifically noted.
   - 3.4. All cells containing reinforcement, embeds, anchor bolts, etc. shall be filled solid with grout. Grout shall be placed by mechanical vibration during placing and revibrated after excess moisture has been absorbed but before workability is lost. Puddling or rodding of grout is not allowed.
   - 3.5. Where walls are not grouted solid, each grout pour shall terminate flush with the top of the uppermost unit except at cells with vertical reinforcing where the grout shall be 1 1/2" below top of unit to provide construction key.
   - 3.6. Grout pours shall be limited to 5'-0" unless high lift grouting procedures are followed.
   - 3.7. All masonry below grade shall be solid grouted.
   - 3.8. Vertical cells to be filled with grout shall have vertical alignment sufficient to maintain a clear, unobstructed, vertical cell measuring not less than 2" by 3". All steel reinforcement shall be secured against displacement prior to grouting by wire positioners or other suitable devices at intervals not exceeding 200 bar diameters or 10'-0" maximum, or at bar splice locations. Vertical reinforcing shall be located at the center of the wall unless noted otherwise.
   - 3.9. Reinforcing bars shall not be welded unless specifically shown on drawings. In such cases, use only AWS standards. Do not substitute reinforcing bars for DBAs or HSAs.
   - 3.10. Control Joints: Spacing shall not exceed 26'-0". See architectural drawings for locations.
   - 3.11. Grout all beam and joist pockets solid after installation of beams and joists.
   - 3.12. Embed channels and plates shall be placed so as to create a flush surface with the face of the wall.
   - 3.13. Anchor bolts and headed stud anchors shall be set in a grouted cell. Anchor bolts and headed stud anchors shall have 1/2" grout surrounding the shank at its penetration. Grout shall be flush with the face or top of the masonry.
4. Detailing Requirements
   - 4.1. Lap all masonry reinforcing per bar size as follows:

     <u>Required lap lengths for single bars centered in each cell:</u>
     #3 = 16" #6 = 43" #9 = 82"
     #4 = 22" #7 = 60"
     #5 = 26" #8 = 72"

     <u>Required lap lengths for flush wall pilaster/column, 2 bars per cell with 2.5" cover:</u>
     #3 = 16" #6 = 54" #9 = 82"
     #4 = 22" #7 = 63"
     #5 = 32" #8 = 72"
   - 4.2. All vertical reinforcing shall be doweled to the foundation wall, footing (structure below) and to the structure below with the same size dowel, spacing (and in the same core) as the vertical wall reinforcing above.
   - 4.3. Corner Bars: Horizontal reinforcement shall be continuous at all corners and at intersecting walls. Provide corner bars with the required lap splice length.
   - 4.4. See details for reinforcing around miscellaneous openings.
   - 4.5. Horizontal wall reinforcing shall be continuous through joining concrete walls, masonry walls, columns, and pilasters. Provide a key between the wall and the column or pilaster. Horizontal wall reinforcing shall be placed inside the column vertical reinforcing.
   - 4.6. Horizontal reinforcing shall terminate with a standard hook at edge of openings and ends of walls without corner bars as shown in details.
   - 4.7. Horizontal wall reinforcing shall terminate with a standard 180° hook at each side of control joints except at floor and roof levels, lintels, beams and at top of parapets as shown in details.
   - 4.8. All masonry column ties shall terminate with 135° hooks plus a 6 bar diameter extension (4" minimum).

MASONRY VENEER

1. Masonry veneer shall be attached to steel stud walls with "Dur-O-Wal DA 213S seismic veneer anchors" by Dur-O-Wal or Hohmann & Barnard "DW-10" or "DW-10HS seismic veneer anchors" (or equal) spaced at 16" on center. Veneer anchors shall be attached to studs with (2) #10 corrosion resistant self-drilling screws and neoprene washers. Attach the veneer to the anchors with "Dur-O-Wal 213S Seismic Steel Pintles" or Hohmann & Barnard 3/16" diameter "Byna-Tie with Seismiclips" (or equal) spaced at a maximum of 16" on center in both directions. Anchor ties shall engage to a galvanized #9 gauge horizontal joint reinforcement wire in the veneer, which shall be continuous and shall be placed at 16" on center maximum at the center of the veneer.
2. Masonry Veneer shall be attached to concrete walls with 22 gauge "Dur-O-Wal DA100" galvanized dovetail slots installed vertically in concrete at 16" on center. Attach the veneer to dovetail slots with 16 gauge "Dur-O-Wal DA 131 seismic dovetail anchor ties" or Hohmann & Barnard 3/16" diameter "Byna-Tie with Seismiclips" (or equal) spaced at a maximum of 16" on center in both vertical and horizontal directions. Anchor ties shall engage to a galvanized #9 gauge horizontal joint reinforcement wire in the veneer, which shall be continuous and shall be placed at 16" on center maximum at the center of the veneer. Dovetail slots and anchor ties shall be galvanized.
3. Masonry veneer shall be attached to reinforced masonry walls with "tri-rod ladur type reinforcement" spaced at a maximum of 16" on center vertically consisting of (3) #9 gauge, galvanized, corrugated, wires. Veneer may also be attached with "Dur-O-Wal DA 3600S Heavy Duty Seismic Ladur-Eye" with DA 213S seismic steel pintles spaced at 16" on center maximum in both vertical and horizontal directions. Anchor ties shall engage to a galvanized #9 gauge horizontal joint reinforcement wire in the veneer, which shall be continuous and shall be placed at 16" on center maximum at the center of the veneer. Anchors shall extend to the galvanized "ladur type" ((2) #9 wires) joint reinforcing in the masonry wall spaced at 16" on center maximum.
4. Other methods of attachment may be used after written acceptance by the architect and structural engineer.
5. Steel Lintels: Provide steel angle lintels at all openings through the masonry veneer. Provide 1" of bearing for each foot of width of opening, with a minimum bearing of 6". See the Steel Angle Lintel Schedule for size.

GENERAL STRUCTURAL NOTES

1/2" = 1'-0"

CRSA MWL

UNIFIED STATE LAB MODULE 2

Schematic Design Submittal

August 26, 2013

S103

STRUCTURAL STEEL

1. Codes and Standards: Fabrication and installation shall comply with the latest edition of the following:
   - 1.1. American Institute of Steel Construction (AISC), "Specification for the Design, Fabrication and Erection of Structural Steel for Buildings," with "Commentary".
   - 1.2. AISC "Code of Standard Practice" excluding sections 3.4, 4.4 and 4.4.1.
   - 1.3. AISC "Specification for Structural Joints Using ASTM A325 or A490 Bolts"
   - 1.4. AISC "Seismic Provisions for Structural Steel Buildings."
   - 1.5. American Welding Society (AWS), Structural Welding Codes D1.1, D1.3, D1.4, and D1.8, except as modified by the "Steel Construction Manual".
2. Material:
   - 2.1. Wide Flange Sections----------ASTM A992 (50 ksi)
   - 2.2. Plate
     - 2.2.1. Typical----------ASTM A36
     - 2.2.2. Braced/Moment Frames----------ASTM A572 Grade 50
   - 2.3. Notch-toughness requirements apply for Group 3, 4, and 5 shapes with flange thickness greater than 1 1/2" and plate 2" and thicker which are a part of the Seismic Load Resisting System (SLRS). Minimum Charpy V-Notch requirements are 20 ft-lbs at 70°F.
   - 2.4. Notch-toughness requirements apply for demand critical welds. Minimum Charpy V-Notch requirements are 20 ft-lbs at 0°F and 40 ft-lbs at 70°F
   - 2.5. Pipe----------ASTM A53 Grade B Type E/S
   - 2.6. Hollow Structural Shapes
     - 2.6.1. Rectangular----------ASTM A500 Grade B (46 ksi)
     - 2.6.2. Round----------ASTM A500 Grade B (42 ksi)
   - 2.7. Other Structural Shapes (M, C, etc)----------ASTM A36
   - 2.8. Bolted Connections ----------ASTM A325
   - 2.9. Anchor Bolts
     - 2.9.1. All Columns unless noted otherwise: ASTM F1554 Grade 105 (equiv to A193 Grade B7) with ASTM A563 heavy hex nuts with ASTM F436 minimum 5/16" thick washers.
   - 2.10. Weld Filler Metal
     - 2.10.1. Shielded Metal Arc Welding----------AWS A5.1, low-hydrogen only
       Low-hydrogen restrictions do not apply when welding sheet steels in accordance with AWS D1.3, including attaching these steels to structural members.
     - 2.10.2. Gas-Metal & Metal-Cored Arc Welding------AWS A5.18
     - 2.10.3. Flux-Cored Arc Welding----------AWS A5.20
       E7XT-4 or E7XT-11 electrodes are not permitted.
     - 2.10.4. Intermixing of welds made from self-shielded welding electrodes with gas-shielded electrodes is not allowed in demand critical welds, unless tested in accordance with AWS D1.8, annex B. The Field Erection Contractor is responsible for verifying intermixing of self-shielded and gas-shielded welding will not occur, or alternatively, the welding procedure is qualified by testing.
   - 2.11. Deformed Bar Anchors (DBA)----------ASTM A496
   - 2.12. Headed Stud Anchors (HSA)----------ASTM A108
   - 2.13. Non-Shrink Grout----------ASTM C1107 Grade B
     Non-shrink grout shall be prepackaged, non-metallic and non-gaseous.
     Furnish certified independent test data to Structural Engineer.
     Fluid Consistency (flow cone) = 20 to 30 seconds
     Compressive Strength in 28 days = 7,500 psi
3. Structural Detailing
   - 3.1. Provide full depth web stiffener plates at each side of all beams at all bearing points. Stiffener plates shall be the thickness called out below unless noted otherwise. Stiffeners shall be welded on both sides of the plate-to-flange and plate-to-web interfaces. Do not weld into the web-to-flange fillet region of the member.

FLANGE WIDTH	STIFFENER THICKNESS & WELD SIZE
Less than 8 1/4"	1/4" & 3/16"
8 1/4" to 12 1/4"	3/8" & 1/4"
12 1/4" to 16 1/2"	1/2" & 5/16"
16 1/2" to 20 3/4"	5/8" & 3/8"

   - 3.2. Bolting and Fasteners
     - 3.2.1. Ordinary steel-to-steel connections, simple span framing, and beam/girder-to-bearing plates are the standard connection used throughout the design drawings, unless noted otherwise:
       - 3.2.1.1. Use A325N bolts or tension-controlled bolts.
       - 3.2.1.2. Tighten these fasteners to a "snug tight" condition.
       - 3.2.1.3. Where a steel-to-steel connection is not shown, provide a framed connection per AISC for one half the total uniform load capacity of the beam for the span and steel specified.
     - 3.2.2. Fasteners and washers shall not be reused. Scrap dirty, rusted, or water-contaminated bolt assemblies.
   - 3.3. Reduced Beam Sections
     - 3.3.1. Fabrication of the reduced flange sections of beams used in SLRS is restricted to mechanically guided thermal cutting processes. Freehand cutting is not permitted.
     - 3.3.2. Flange cuts shall meet the requirements of AISC 358.
     - 3.3.3. Repair of gouges, notches, mill imperfections, shall conform to the requirements of the AISC and AWS provisions.
   - 3.4. Weld Access Holes and Temporary Attachments
     - 3.4.1. Fabricate beam copes and weld access holes using the geometry described in AISC 360 Section J1.6.
     - 3.4.2. Runoff tabs are to be removed unless noted otherwise.
   - 3.5. Backup Bars: Remove backup bars from all beam bottom flange connections in demand critical welds, unless noted otherwise. Backgouge the root and weld to sound metal. Reweld the gouged area and add a 5/16" reinforcing fillet weld.
   - 3.6. Protected Zones: No connections, other than those on the design drawings, shall be made within the protected zone of the SLRS as identified in AISC 341.
     - 3.6.1. Locate headed studs, welds, miscellaneous metal, etc outside of the protected zone.
     - 3.6.2. Paint the protected zones with bright paint before and after fire coating operations to identify them.
   - 3.7. All welds not noted on drawings shall be minimum 1/4" fillet welds.
   - 3.8. All structural steel members shall be considered as an unrestrained fire-resistance-rated assembly.
4. Welding of Reinforcing Steel or Bolts
   - 4.1. Reinforcing Bars: Do not weld rebar except as specifically detailed in the drawings. In such cases, use only AWS standards. Do not substitute reinforcing bars for deformed bar anchors, structural bolts, or headed stud anchors.
   - 4.2. Do not weld anchor bolts, including "tack" welds.
   - 4.3. Headed Stud Anchor welding and Deformed Bar Anchor welding shall conform to the manufacturer's specifications.

COMPOSITE STEEL BEAMS

1. All beams supporting concrete over metal deck shall have headed stud anchors.
2. Composite beams are indicated on the framing plans with a suffix (nn). The number inside parentheses indicates the number of studs for this beam or section of beam. Beams or sections of beams shall have the studs spaced uniformly over the beam or section. The maximum spacing shall not exceed 36" on center.
3. All headed stud anchors shall conform to ASTM A-108. Dimensions shall comply with AISC. Use 3/4" diameter studs. Headed studs shall extend 1 1/2" minimum (2" maximum) above the top of the steel deck after welding. Headed studs shall be applied through the metal deck to the top flange of the steel section or welded directly to the steel section.
4. The minimum on center spacing of stud connectors shall be 6 diameters along the longitudinal axis of the supporting composite beam and 4 diameters transverse to the longitudinal axis of the supporting composite beam.
5. Composite beams shall be precambered as shown on plans. On the plans, c=0.00" denotes precamber dimension (upward) in inches.
6. Camber tolerance shall be +1/4", -0".
7. Slab shall be screeded to a constant thickness as indicated.

OPEN WEB STEEL JOISTS AND GIRDERS

1. All open web steel joist and girders shall be fabricated and erected in accordance with the latest edition of Steel Joist Institute (SJI), "Standard Specifications and Code of Standard Practice."
2. Joists or girders with slopes greater than 1/2" per foot shall be designed to meet or exceed the load capacities, listed in the SJI load tables, of the joist or girder sizes indicated on the framing plan, as if the joists or girders were installed level.
3. Provide special bearing ends to accommodate slopes from sloped joists, sloped girders or sloped bearing conditions.
4. Modifications to any joist or girder, including holes through the top and bottom chords, without the written consent and direction from the manufacturer is not allowed.
5. Design loads, unless noted otherwise:
   - 5.1. Wind loads (W) shown are calculated using ASCE 7.
   - 5.2. Seismic loads (E and Em) shown are calculated using ASCE 7.
   - 5.3. Gravity loads (D, L, S, etc.) shown are Allowable Stress (Working Stress) levels.
   - 5.4. Loads shown are at levels to be used directly by the Load Combinations from Section 1605 of the IBC without further adjustment.
   - 5.5. Allowable stress increases are permitted as allowed by the referenced standard being used for design.
6. The deflection of all open web joists and girders shall be limited to L/240 for total load and L/360 for live load, unless noted otherwise.
7. A certificate of compliance must be submitted to the building official upon completion of fabrication per IBC 2207.5.

METAL DECKING

1. Steel deck shall comply with the latest requirements of the Steel Deck Institute.
2. Steel deck material shall comply with the manufacturer's ICC Report and have a minimum yield strength of 33ksi.
3. All deck shall be 3-span continuous minimum. In areas where 3-span conditions are not possible, the contractor shall provide heavier gauge deck as required to provide the equivalent loading of the specified deck under a 3-span condition.
4. Steel roof deck shall not be used to support loads from plumbing, HVAC ducts, light fixtures, architectural elements, or equipment of any kind, unless specifically noted.
5. Conduits are permitted in deck slabs subject to local code requirements and fire rating considerations. When conduit is installed in the slab, it shall be limited to conduits having a diameter of 1" or less, or less than 1/3 the concrete cover, and no crossovers occur, and conduit is spaced at least 18" apart with a 3/4" minimum cover.
6. All members supporting deck shall be dry before welding.
7. Crimp seams before button punching or welding interlocking seams.
8. Where deck is to receive sprayed-on fire proofing, painted deck shall be coated with special paint that will allow the sprayed-on fire proofing to adhere to the painted deck.
9. All welds performed on the steel deck are to be painted.
10. Steel deck shall be galvanized (G60) when used above or below mechanical equipment rooms.
11. Steel floor deck shall be phosphatized/painted, composite, with interlocking side seams with the following minimum properties (LW = Light weight concrete, NW = Normal weight concrete):
    Type/Ga------S(in3/ft)------I (in4/ft------Concrete (Total)---------Allowable shear value----------Notes
    W3/20--------0.534---------0.896--------3 1/2"(6 1/2) NW-------1740 plf for 9'-0" span----------Typ. Floor
    B/20----------0.235---------0.216--------2 1/2"(4") NW----------1604 plf for 7'-6" span----------Where Indicated
    - 11.1. Weld deck to supporting framing members with 3/4" diameter puddle welds at the following spacing (Closer spacings may be used to develop minimum shear requirements):
      - 11.1.1. 12" on center to supports perpendicular to deck corrugations (4 welds per 36" wide sheet).
      - 11.1.2. 12" on center to all supports parallel to deck corrugations.
    - 11.2. Attach interlocking seams with 3/16" diameter button punch at 18" on center or 1 1/2" top seam weld at 36" on center between adjacent pieces of deck. Closer spacings may be used to develop minimum shear requirements.
    - 11.3. Provide a 2" minimum bearing at all supports.
    - 11.4. Butt all end splices.
12. Steel roof deck shall be painted with interlocking side seams with the following minimum properties:
    Type/Ga----------S(in3/ft)----------I (in4/ft)----------Allowable shear value----------Notes
    1 1/2" B/20----------0.235----------0.216----------962 plf for 7'-0" span----------Typ. Roof
    1 1/2" B/18----------0.322----------0.302----------1907 plf for 6'-0" span----------Where Indicated
    - 12.1. Weld steel roof deck to supporting framing members with 3/4" diameter puddle welds at the following spacings (Closer spacings may be used to develop minimum shear requirements):
      - 12.1.1. 6" on center to all supports perpendicular to deck corrugations (7 welds per 36" sheet).
      - 12.1.2. 6" on center to all supports parallel to deck corrugations.
      - 12.1.3. Interlocking side seams between adjacent pieces of decking may be attached with "Verco Sidelap Connections" by Verco Manufacturing (VSC) or "ASC DeltaGrip side seam connection" by ASC Steel Deck at 12" on center minimum.
    - 12.2. The Contractor may submit, for review and approval, the manufacturer's ICC report of an alternate method of deck attachment. The alternate method shall provide minimum deck diaphragm shear values equal to or greater than those noted above. The alternate method shall be approved by the engineer of record prior to the substitution.
    - 12.3. Provide a 2" minimum bearing and an 4" lap at the splice points, centering the splice over the support.

GENERAL STRUCTURAL NOTES

1/2" = 1'-0"

COLD FORMED STEEL

1. Wall System Performance Requirements
   - 1.1. All systems intended for use to enclose the building shall comply with the following criteria for interstory drift as required by ASCE 7-10 as interpreted or defined herein and as modified or supplemented herein. Systems shall be detailed to accommodate vertical building movement (live load deflection) in conjunction with interstory drift.
     - 1.1.1. All components and systems shall be designed and detailed for elastic (probable) interstory drift (lateral displacement of one floor relative to adjacent floors as indicated in the General Structural Notes. For this given magnitude of movement, all systems and/or elements and/or components shall remain intact, undamaged and all sealant joints integral to or placed between systems shall remain intact, uncompromised, without failures or breaches. Joints, jointing and/or jointery shall be designed such that sealant materials flex, compress and/or shear within limits recommended by the sealant manufacturers so as to remain an effective barrier for water and air infiltration.
     - 1.1.2. In addition, all systems, elements and components shall be designed and detailed for amplified interstory (credible) as indicated in the General Structural Notes such that no failure or distress occurs to systems, and/or components, and/or elements and/or connections except joint sealant is allowed to fail. Under no circumstances shall elements and/or components come in contract with adjacent systems, elements and/or components.
     - 1.1.3. Systems with glazing are intended to keep all members and glazing intact and connected to the building. Glazing shall not break or become dislodged from its restraints. Gaskets may fail and may dislodge but shall not let glass escape its restraint.
     - 1.1.4. Allowance shall be made for sealant to occupy some finite space when compressed beyond its working limit (suggest ±15% of its static joint width).
   - 1.2. All system connections shall comply with requirements of ASCE 7-10, Chapter 13.
   - 1.3. All systems shall be coordinated with all associated adjoining and interface in systems such that consistency is maintained throughout the exterior closure regarding the mode (sliding or racking) in which the system performs to meet interstory drift and other design criteria.
   - 1.4. Systems and details shall be consistent with the architectural intent for joint sizes and system details to the largest extent possible, or where required, modified only after prior approval.
2. Cold Formed Steel Framing
   - 2.1. The design of cold formed steel and low alloy steel structural members shall be in accordance with AISI-NASPEC, North American Specification for the Design of Cold-Formed Steel Structural Members.
   - 2.2. The design, installation and construction of cold formed steel for structural and non-structural framing shall be in accordance with AISI-CFSD, Standard for Cold-Formed Steel Framing - General Provisions.
   - 2.3. All steel framing members shall comply with ASTM C995.
   - 2.4. Follow all manufacturers' guidelines and recommendations for all products.
   - 2.5. Unless noted otherwise, all welded connections shall be done according to AWS standards.
   - 2.6. All interior non-bearing steel stud walls that extend above the ceiling but do not attach to the structure above shall be braced with diagonal metal-stud braces (45°). The kl/r ratio of the brace shall not exceed 200 and shall not be spaced further apart than 10'-0" on center. Connect diagonal braces to the top of the steel stud walls and to the top flange of the steel beams with (2) #10 tek screws minimum. Where a concrete deck occurs above, use two powder-driven fasteners per diagonal brace. Other approved methods may be used.
   - 2.7. Anchor bolts: See steel section of general notes.
3. Connection Hardware
   - 3.1. Exterior framing shall be attached to primary structure to provide vertical and lateral drift as indicated in these drawings. The "DriftTrack DTSL" by the Steel Network or equivalent is suitable to meet this requirement. Inside and outside corner joints shall be detailed to accommodate the lateral drift indicated. See architectural drawings for joint location and details.
   - 3.2. All connection hardware (examples: "StiffClip", "VertiClip", "DriftClip", "BridgeClip", etc) shown shall be supplied by:
     The Steel Network, Inc.
     3221 Wellington Court
     Raleigh, NC 27615
     Phone: (888) 474-4876
     www.steelnetwork.com
   - 3.3. Install all hardware per the manufacturer's guidelines and recommendations.
   - 3.4. The contractor may submit an alternate connection method for approval by Dunn Associates, Inc. and the Architect.

LEGEND OF MARKS AND ABBREVIATIONS

AB	Anchor Bolt	JST	Joist
ABV	Above		
ALT	Alternate	K	Kip(S) = 1000 Pounds
ARCH	Architect	KLF	Kips Per Lineal Foot
		KSF	Kips Per Square Foot
BLDG	Building		
BLW	Below	LB	Pounds (#)
BM	Beam	LOC	Location
BOTT	Bottom		
BRB	Buckling Restrained Brace	MAS	Masonry
BRDG	Bridging	MAX	Maximum
BRG	Bearing	MECH	Mechanical
BTW	Between	MEZZ	Mezzanine
		MFR	Manufacturer
CGS	Center of Gravity of Strand	MIN	Minimum
CJ	Control Joint	MISC	Miscellaneous
CJP	Complete Joint Penetration	MTL	Metal
CL	Center Line		
CMU	Concrete Masonry Unit	NTS	Not To Scale
COL	Column		
CONC	Concrete	oc	On Center
CONN	Connection	OPNG	Opening
CONT	Continuous	OPP	Opposite
COORD	Coordinate		
CTR	Center	PCF	Pounds per Cubic Foot
		PEN	Penetrate or Penetration
DB	Deck Bearing	PERP	Perpendicular
DBA	Deformed Bar Anchor	PFT	Pre-Fabricated Truss
DBL	Double	PL	Plate
DCW	Demand Critical Weld	PLF	Pounds per Lineal Foot
DET	Detail	PREFAB	Prefabricated
DIA	Diameter	PSF	Pounds per Square Foot
DIM	Dimension	PSI	Pounds per Square Inch
DWG	Drawing	PT	Post Tension
(E)	Existing	REINF	Reinforce
EA	Each	REQD	Required
EF	Each Face	RTU	Roof Top Unit
EL	Elevation		
ELEC	Electrical	SCHED	Schedule
ENGR	Engineer	SIM	Similar
EQ	Equal	SOG	Slab on Grade
EQUIP	Equipment	STD	Standard
EQ SP	Equally Spaced	STIFF	Stiffener
EW	Each Way	STL	Steel
EJ	Expansion Joint	STRUCT	Structural
EXT	Exterior	SW	Shear Wall
FLR	Floor	T&B	Top and Bottom
FND	Foundation	TEMP	Temperature
FTG	Footing	THRU	Through
		T/	Top of
ga	Gage	TYP	Typical
GALV	Galvanized		
GSN	General Structural Notes	UNO	Unless Noted Otherwise
HORIZ	Horizontal	VERT	Vertical
HSA	Headed Stud Anchor		
HSS	Hollow Structural Section	W/	With
		WWR	Welded Wire Reinforcement
ICBO	International Conference of Building Officials	WP	Working Point
IBC	International Building Code		
ICC	International Code Council		
INT	Interior		

DEFERRED SUBMITTALS

1. Items requiring deferred submittals that are listed below are to be designed and fabricated by the manufacturer according to specifications given in the construction documents.
   - 1.1. Steel Stairs (by steel stair manufacturer)
   - 1.2. Buckling Restrained Braces (by supplier) to meet the applicable requirements of AISC 341-10
   - 1.3. Exterior Facade Framing and Connections (by supplier) showing compliance with drift requirements
   - 1.4. Ceilings and Non-Structural Walls and Partitions (by supplier)
   - 1.5. Seismic Bracing for mechanical, electrical and plumbing components
2. These deferred submittals shall first be submitted to the project architect and/or engineer for review and coordination. Upon completion of the architect/engineer review, the architect/engineer will submit the deferred submittals to the Building Official for review and approval. The submittal to the Building Official shall include a letter stating that the architect/engineer review has been performed and that the plans and calculations for the deferred submittal items are found to be in general conformance with the design drawings with no exceptions.
3. The final submittal shall be signed and sealed by a Professional Engineer licensed in the state in which construction will occur and shall be available at the jobsite throughout construction.
4. Construction related to deferred submittals shall not commence until the Building Official has approved the submittal.

GENERAL STRUCTURAL NOTES

1/2" = 1'-0"

SPECIAL INSPECTION & STRUCTURAL OBSERVATION REQUIREMENTS

1. Special Inspections and Testing:
   - 1.1. Special inspection and testing as required per the construction documents and per Chapter 17 of the IBC shall be provided for this project unless waived by the Building Official.
   - 1.2. An independent agency/agencies shall be employed by the Owner, shall perform the special inspection and testing services required.
   - 1.3. Structural observations are required per the construction documents, and per the IBC, and shall be required for this project unless waived by the Building Official. The Engineer of Record or his representative shall perform structural site observations as required.
   - 1.4. Structural observations are required per the construction documents, and per the IBC, and shall be required for this project unless waived by the Building Official. A registered design professional employed by the Owner shall perform the structural observations as required.
   - 1.5. Structural observations are not required for this project. However, Dunn Associates has been contracted by the Architect/Owner to make structural observations as deemed necessary.
   - 1.6. Structural observations are not required for this project. However, the Engineer of Record or his representative may make structural observations as deemed necessary.
   - 1.7. The special inspection and testing requirements of this section of the General Structural Notes serve as the Engineer of Record's statement of special inspections and structural observations required by Chapter 17 of the IBC.
2. Contractor Responsibilities
   - 2.1. Each Sub-Contractor responsible for the construction of a main wind or seismic force resisting system, a designated seismic system, or a wind or seismic resisting element or component shall submit a written statement of responsibility to the Building Official and Owner prior to commencing with the work involved. It shall contain acknowledgement of awareness of the special inspection and testing requirements.
   - 2.2. The Contractor is to coordinate and cooperate with all the required inspections, testing and/or structural observations required for the project. The Contractor is not to proceed with subsequent work until required inspections, testing and/or structural observations have been provided.
   - 2.3. The Contractor is to correct all work found to be deficient, and re-test at no additional cost to the Owner.
   - 2.4. The Contractor is to notify the Engineer of Record at least (2) days prior to any required structural observations.
3. Special Inspector Responsibilities:
   - 3.1. Each Special Inspector shall be a qualified person who shall demonstrate competence, to the satisfaction of the Building Official, for the inspection of the particular type of construction or operation requiring special inspection.
   - 3.2. Special Inspectors shall keep records of their inspections. They shall submit inspection reports to the Building Official and the Architect/Engineer.
   - 3.3. Inspection reports shall indicate whether the work inspected was or was not completed in accordance with the construction documents and the referenced building codes.
   - 3.4. Non-conforming work and/or discrepancies shall be brought to the Contractor's immediate attention for correction.
   - 3.5. The Special Inspector is to notify the Architect/Engineer of any non-conforming work or discrepancies that the Contractor cannot readily correct.
   - 3.6. Any uncorrected non-conforming work or discrepancies shall be brought to the attention of the Architect/Engineer and Building Official prior to completion of that phase of the work.
4. Quality Control Submittals for Structural Steel
   - 4.1. Furnish Level III nondestructive testing (NDT) personnel certifications.
   - 4.2. Furnish welder qualification records to verify project welders are tested and qualified in accordance with AWS D1.1 before welding structural or miscellaneous steels, D1.3 before welding sheet steels (10 ga and thinner), and D1.4 before welding reinforcing steel. Submit documentation to the approved inspection agency for review before welding.
     - 4.2.1. Special, restricted welder qualification testing is required for welders joining the bottom-flange through the weld access hole connection in demand critical welds. Qualify welders for the minimum groove angle and maximum deposition rate used in production. Follow the instructions for supplemental qualification testing in AWS D1.8, Section 5.1. Qualification testing must take place within two years from the start of this project.
   - 4.3. The fabricator/erector shall maintain a system by which the welder who has welded a joint or member can be identified. Stamps, if used shall be the low stress type.
   - 4.4. Furnish welding procedures that comply with AWS D1.1, D1.3, D1.4, D1.8, as required by the project. Welding procedures shall be made available to welders and inspectors.
     - 4.4.1. Furnish weld filler metal product data sheets identifying optimum welding parameters and storage conditions with each welding procedure submittal.
     - 4.4.2. Identify the maximum welding heat input per inch of weld (KJ/in) permitted by the welding procedures.
     - 4.4.3. Identify the maximum deposition rate that will be used while welding on any demand critical weld.
     - 4.4.4. Furnish typical welding filler metal Certificates of Conformance that identify the WPS Heat Input Envelope.
   - 4.5. Furnish a preliminary welding repair procedure to follow should welding repairs be required within the Seismic Protected Zone.
   - 4.6. Provide bolt storage and installation procedures to the approved inspection agency for review.
   - 4.7. Provide mill/material test reports (MTR) or certificates of conformance (CofC) that verify compliance of furnished materials to the requirements of the approved contract documents. MTRs or CofCs are required for structural shapes, plate, metal deck, fasteners, headed studs, DBAs, weld filler metal, and bolt assemblies used as primary, load-bearing members. Maintain the heat number traceability of structural shapes and plate used as primary, load bearing members.
5. Structural Steel Non-Destructive Testing (NDT)
   - 5.1. NDT personnel will:
     - 5.1.1. Qualify in accordance with the recommended practices of the American Society of Nondestructive Testing, SNT-TC-1A, latest edition.
     - 5.1.2. Pass eye examinations meeting: (1) ASTM requirements at least once a year, and (2) AWS D1.1 every three years.
     - 5.1.3. Be certified in accordance with the AWS QC-1, latest edition.
     - 5.1.4. Level III must be qualified by ASNT testing in the applicable method under review.
   - 5.2. Only Level II and Level III technicians, qualified by testing in the applicable method, are permitted to interpret nondestructive testing results.
   - 5.3. Only Senior Certified or Certified Welding Inspectors (SCWI, CWI) are permitted to evaluate welds. Certified Associate Welding Inspectors may evaluate welds when under the direct supervision of a SCWI and/or CWI.
   - 5.4. Approved Inspection Agency will certify the following:
     - 5.4.1. Level III inspector has reviewed the NDT procedures
     - 5.4.2. Project ultrasonic testing technicians, testing demand critical welds, are trained and qualified in accordance with AWS D1.8, Annex E
     - 5.4.3. That the Inspection Agencies' ultrasonic testing procedures are qualified by weld mockups similar to AWS D1.1, Annex S
6. Section 1705: Special Inspections
   - 6.1. Fabricators (1704.2.5): All offsite fabrication of structural members (structural steel, precast concrete, wood glulams, etc.) shall be special inspected as required by the IBC, except work performed by fabricators registered and approved to perform work without special inspection. Approved fabricators shall submit a certificate of compliance to building official at the completion of fabrication.
   - 6.2. Steel (1705.2): Special inspection is required during the fabrication of any load-bearing members and assemblies, unless the fabricator and/or erector demonstrate prior approval by the jurisdiction where fabricated steel will be installed.
     - 6.2.1. Perform all welding and welding special inspection activities in accordance with AWS D1.1, D1.3, D1.4, and D1.8, and AISC 360 Chapter N as appropriate for the material form and welding methods employed. Approved methods and acceptance criteria are established in these codes.
     - 6.2.2. Perform all bolting and bolting inspection in accordance with AISC 360 Specification for Structural Steel Buildings Using A325 and A490 Bolts and AISC 360 Chapter N.
     - 6.2.3. Continuous Special Inspection of welding is required for:
       - 6.2.3.1. Complete and partial penetration welds, except flare-bevel groove welds
       - 6.2.3.2. Multi-pass fillet welds
       - 6.2.3.3. Single-pass fillet welds larger than 5/16"
     - 6.2.4. Continuous Special Inspection of pretensioned and slip-critical bolts is required as follows:
       - 6.2.4.1. Verify surface condition of all faying surfaces attached with pretensioned fasteners is in accordance with AISC Specification for Structural Joints Using A325 and A490 Bolts.
       - 6.2.4.2. Witness pretensioned and slip-critical fastener installations to verify the methods are controlled in accordance with the AISC Specification for Structural Joints Using A325 and A490 Bolts.
     - 6.2.5. Periodic Special Inspection of welding is required for (Inspect 25% of welds while welding operations are taking place):
       - 6.2.5.1. Single-pass fillet welds equal to or smaller than 5/16"
       - 6.2.5.2. Floor and roof deck arc spot, puddle welds
       - 6.2.5.3. Welding of stairs and railing systems, cold formed steel studs/joists.
       - 6.2.5.4. Welded studs used in diaphragms.
       - 6.2.5.5. Welded sheets for cold formed steel shear walls.
     - 6.2.6. Periodic Special Inspection of all bolts is required as follows:
       - 6.2.6.1. Verify the proper grade of fasteners are installed where indicated in the approved construction drawings.
       - 6.2.6.2. Verify the storage and cleanliness of high strength fasteners meets AISC requirements.
       - 6.2.6.3. Store fasteners in protected storage until released for use. Temperature control is not required. Do not use fastener components showing rust, dirt, or grit. Cleaning or modifying fastener components from the as-delivered condition is not permitted.
       - 6.2.6.4. Verify the faying surfaces have been brought into firm contact, the bolts are in a snug tight condition, and that washers have been used as required.
     - 6.2.7. Periodic Special Inspection of pretensioned and slip-critical bolts is required as follows:
       - 6.2.7.1. Confirm complete fastener assemblies and the wrench systems used are suitable for pretensioned and slip-critical installations.
       - 6.2.7.2. Test fastener combinations and calibrate wrench systems using calibrated tension calibrators, Skidmore-Wilhelm, or equal, in accordance with the AISC Specification for Structural Joints Using A325 or A490 Bolts.
       - 6.2.7.3. Verify high strength fasteners are installed to a snug tight condition either before pretensioning or as a final condition where no other bolting requirements are imposed. Do not intermingle lots verified for pretensioned or slip-critical installations.
       - 6.2.7.4. Witness bolting operations while the contractor performs pretensioning using match-marked, turn-of-the-nut method, or when using DTIs, or twist-off bolts.
     - 6.2.8. Non-Destructive Testing (NDT) of Welds is required as follows:
       - 6.2.8.1. Fabricators will visually inspect all welds for conformance to the approved construction drawings before releasing items for installation.
       - 6.2.8.2. Test all complete joint penetration welds joining primary structural members 5/16" or thicker, by radiographic or ultrasonic testing. Test in accordance with AWS D1.1, Section 6.
       - 6.2.8.3. Ultrasonically test base metal thicker than 1 1/2" for material discontinuities when that material is subjected to through-thickness weld shrinkage strains. (e.g. column flange of the beam-to-column, or column to base plate, complete joint penetration welds)
       - 6.2.8.4. Magnetic Particle Test is required for the following items:
         - 6.2.8.4.1. All temporary attachment or unauthorized weld sites or repairs inside the Protected Zones after finishing and grinding operations
         - 6.2.8.4.2. Any welds made in the k-zone
         - 6.2.8.4.3. 25% of all beam-to-column complete joint penetration welds
         - 6.2.8.4.4. Beam copes and weld access holes made in rolled shapes with flange thickness greater than 1 1/2" or in built-up shapes with webs thicker than 1 1/2"
         - 6.2.8.4.5. Weld tab removal sites.
       - 6.2.8.5. Amount of NDT is permitted to be reduced according to AISC 341, Appendix Q5.2(g) and (h) if appropriate criteria are met and if approved by the building official and engineer of record.
     - 6.2.9. Special inspections and Testing for Non-Shrink Grout shall be required as follows:
       - 6.2.9.1. Periodic special inspection verifying the use of required mix design.
       - 6.2.9.2. Samples of non-shrink grout shall be tested for compressive strength at least daily, with additional tests required for each additional 10 bags mixed per day.

GENERAL STRUCTURAL NOTES

1/2" = 1'-0"

6.3. Concrete (1705.3): Concrete construction shall be special inspected according to Table 1705.3. In the absence of sufficient data or documentation showing conformance to quality standards for concrete materials, testing shall be required to determine material properties under the direction of the building official according to Chapter 3 of ACI 318.

6.4. Masonry (1705.4):

6.4.1. Engineered masonry and vertical masonry foundation elements shall be special inspected per TMS 402 / ACI 530 / ASCE 5 and TMS 602 / ACI 530.1 / ASCE 6.

6.4.2. Empirically designed masonry, glass unit masonry, and brick veneer in Risk Category IV, designed per IBC Sections 2109, 2110 or Chapter 14, shall comply with TMS 402 / ACI 530 / ASCE 5 Level B quality assurance.

6.4.3. Empirically designed masonry, glass unit masonry, and brick veneer, designed per IBC Sections 2109, 2110, or Chapter 14, in Risk Categories I, II, III, and masonry foundation walls constructed per IBC Tables 1807.1.6.3 (1 to 4), and masonry fireplaces, heaters, or chimney's constructed in accordance with IBC Sections 2111, 2112, and 2113 are not required to be special inspected.

6.5. Soils (1705.6): Existing site soil conditions, fill placement and procedure and load-bearing requirements shall be special inspected to verify compliance with the approved soils report and Table 1705.6. Where total depth of controlled fill is 12" or less, the special inspector shall verify that the in-place dry density of the compacted fill is not less than the 90% of the maximum dry density at optimum moisture content according to ASTM D 1557.

6.6. Sprayed fire-resistant materials (1705.13): Special inspections shall be performed for sprayed fire-resistant materials applied to structural elements and decks shall be in accordance with Sections 1705.13.1 through 1705.13.6 and based on the fire-resistance design as designated in the architectural drawings.

6.7. Mastic and intumescent fire-resistant coatings (1705.14): Special inspections for mastic and intumescent fire-resistant coatings applied to structural elements and decks shall be in accordance with AWCI 12-B and based on the fire-resistance design as designated in the architectural drawings.

6.8. See architectural drawings for additional inspections pertaining to EIFS (1705.15), fire resistant penetrations and joints (1705.16), or smoke control systems (1705.17).

7. Section 1705.11: Special Inspections for Seismic Resistance

7.1. Structural steel (1705.11.1): See special inspections for steel above.

7.2. Cold-formed steel framing (1705.11.3): Periodic special inspection is required during welding operations of elements of the seismic-force-resisting system. Periodic special inspection is required for screw attachment, bolting, anchoring and other fastening of components within the seismic-force-resisting system, including shear walls, braces, diaphragms, collectors and hold-downs.

7.3. Designated Seismic Systems (1705.11.4): The Special Inspector shall examine designated seismic systems requiring seismic qualifications in accordance with Section 1705.12.3, and verify that label, anchorage or mounting conforms to the certificate of compliance.

7.3.1. Designated Seismic Systems include all architectural, mechanical, and electrical components included in chapter 13 of ASCE 7 including components that are required to function for life safety purposes after and earthquake, including fire protection sprinkler systems, components that contain hazardous materials, and components in a Risk Category IV that are needed for continued operation of the facility, or if its failure could impair continued operation of the facility.

7.3.2. Components that are exempt from special inspection are listed in Section 13.1.4 of ASCE 7.

7.3.3. Refer to the architectural, mechanical, electrical drawings for all designated seismic systems required for their individual disciplines.

7.4. Architectural Components (1705.11.5): Provide periodic special inspection of architectural components. See specific discipline drawings.

7.5. Mechanical and Electrical Components (1705.11.6): Special inspection for mechanical and electrical components shall be provided per Section 1705.11.6 and the specific discipline drawings.

7.6. Storage Racks (1705.11.7): Periodic special inspection of the anchorage of storage racks 8 feet in height or greater is required.

8. Section 1705.12: Structural Testing for Seismic Resistance

8.1. Concrete Reinforcement (1705.12.1): Where reinforcement complying with ASTM A 615 is used to resist earthquake-induced flexural and axial forces in special moment frames, special structural walls and coupling beams connecting special structural walls in structures assigned to Seismic Design Category B, C, D, E or F, the reinforcement shall comply with section 21.1.5.2 of ACI 318. Certified mill test reports shall be provided for each shipment of such reinforcement. Where ASTM A 615 reinforcing steel is to be welded, chemical tests shall be performed to determine weldability in accordance with Section 3.5.2 of ACI 318.

8.2. Structural steel (1705.12.2): See special inspections for steel above.

8.3. See manufacturer's seismic certification of compliance for non-structural components, per 1705.12.3.

9. Special Inspections for Wind Resistance (1705.10):

9.1. Cold-formed Steel Light Framed Construction (1705.10.2): Periodic special inspection is required during welding operations of elements of the main wind-force resisting system. Periodic special inspection is required for screw attachment, bolting, anchoring and other fastening of components within the main wind-force resisting system, including shear walls, braces, diaphragms, collectors (drag struts) and hold-downs.

9.2. Wind Resisting Components (1705.10.3): Periodic special inspection is required for the following systems and components:

1. Roof cladding
2. Wall cladding

10. Structural Observations: Structural Observations are [required] [not required] for this project per 1704.5 of the IBC.

10.1. Structural Observations of the following stages of construction shall be provided.The Contractor shall notify the Engineer of Record at least 2 days prior to the following stages of construction so that the Engineer may have the opportunity to review the work.

10.1 Structural observations are not required, however site observations are part of the Dunn Associates, Inc. contract with the Architect/Owner. The stages of construction listed below will serve as suggested stages of construction to be observed. The Contractor shall notify the Engineer of Record at least 2 days prior to the following stages of construction so that the Engineer may have the opportunity to review the work.

10.1.1. Initial placing of any concrete, including but not limited to: footings, shear walls, slabs on grade or concrete over steel deck

10.1.2. Initial grout pours for masonry walls

10.1.3. Initial erection of structural steel

10.1.4. Completion of structural roof deck

10.1.5. Initial finish work

10.2. Site observation reports will be provided to the Architect. Distribution to the Contractor, Owner, and/or Building Official will be through the Architect.

11. Seismic/Wind Main Force Resisting Systems That Require Special Inspections

11.1. Concrete Shear Walls

11.2. Steel Moment Frames

11.3. Buckling Restrained Braced Frames

11.4. Metal Roof Deck

11.5. Concrete diaphragms (suspended)

11.6. Concrete diaphragms (slab-on-grade)

GENERAL STRUCTURAL NOTES

1/2" = 1'-0"

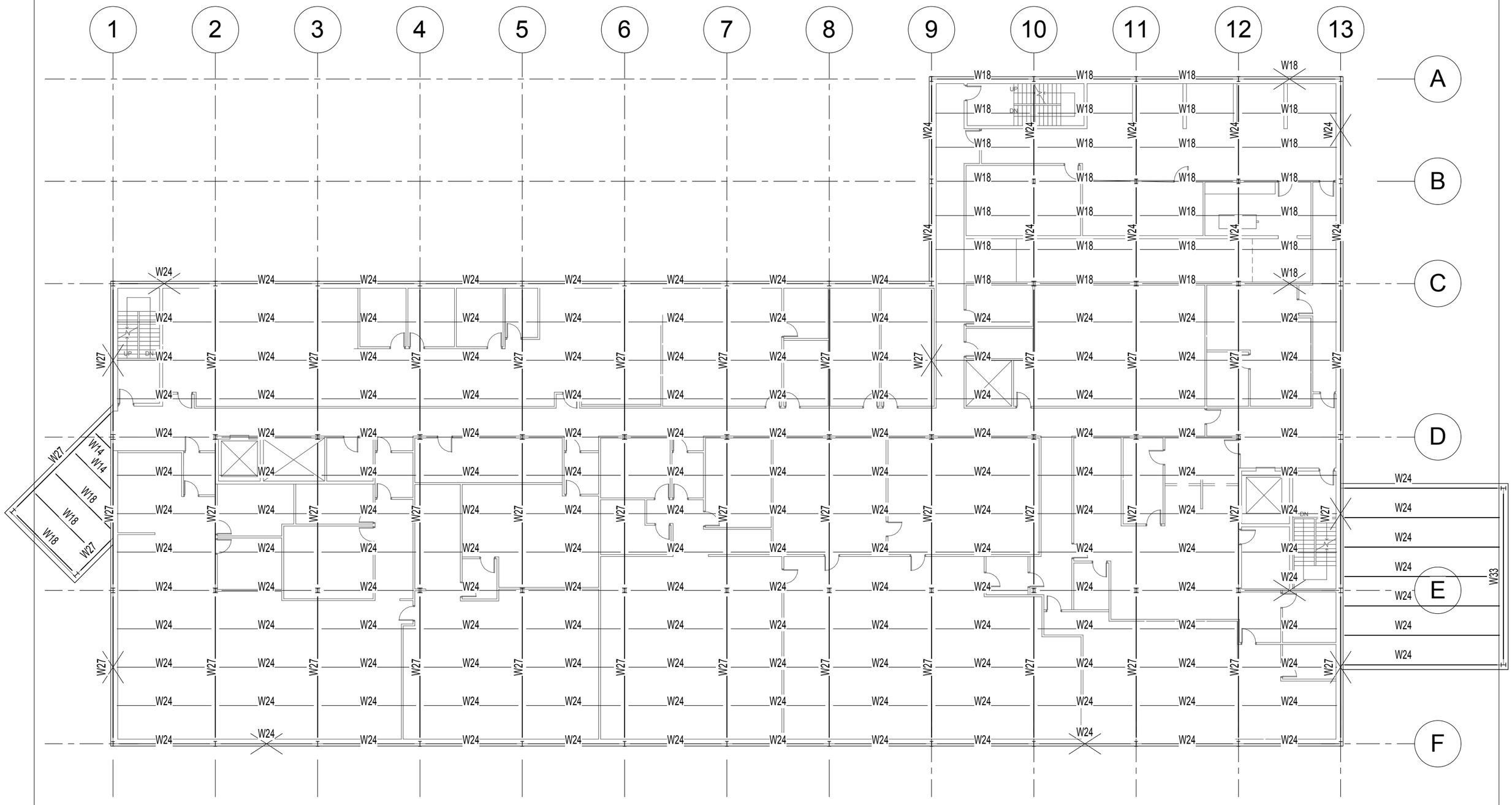

SECOND FLOOR FRAMING PLAN

1" = 20'-0"

CRSA

MWL

UNIFIED STATE LAB MODULE 2

Schematic Design Submittal

August 26, 2013

S202

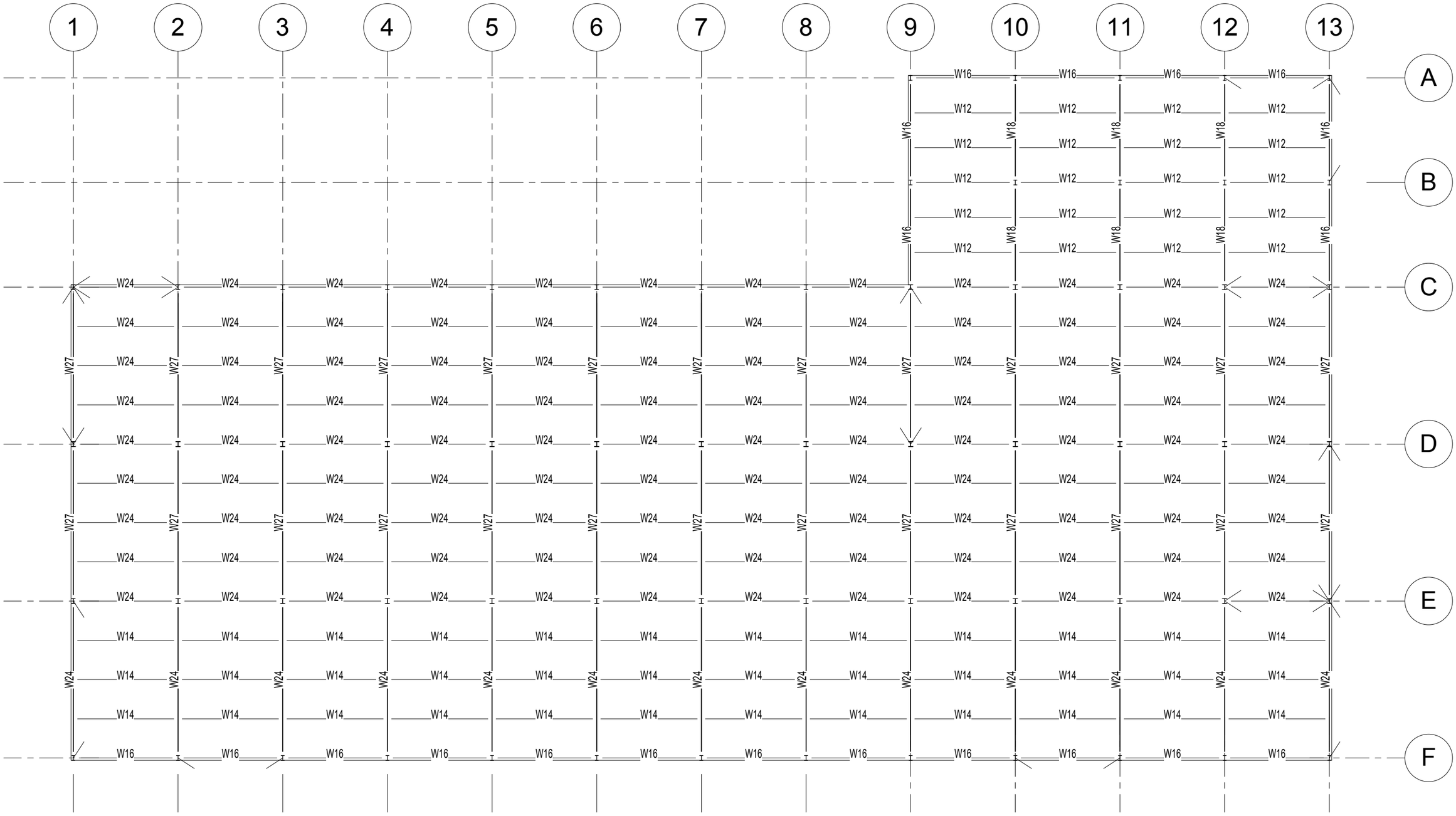

THIRD FLOOR FRAMING PLAN

1" = 20'-0"

CRSA MWL

UNIFIED STATE LAB MODULE 2

Schematic Design Submittal

August 26, 2013

S203

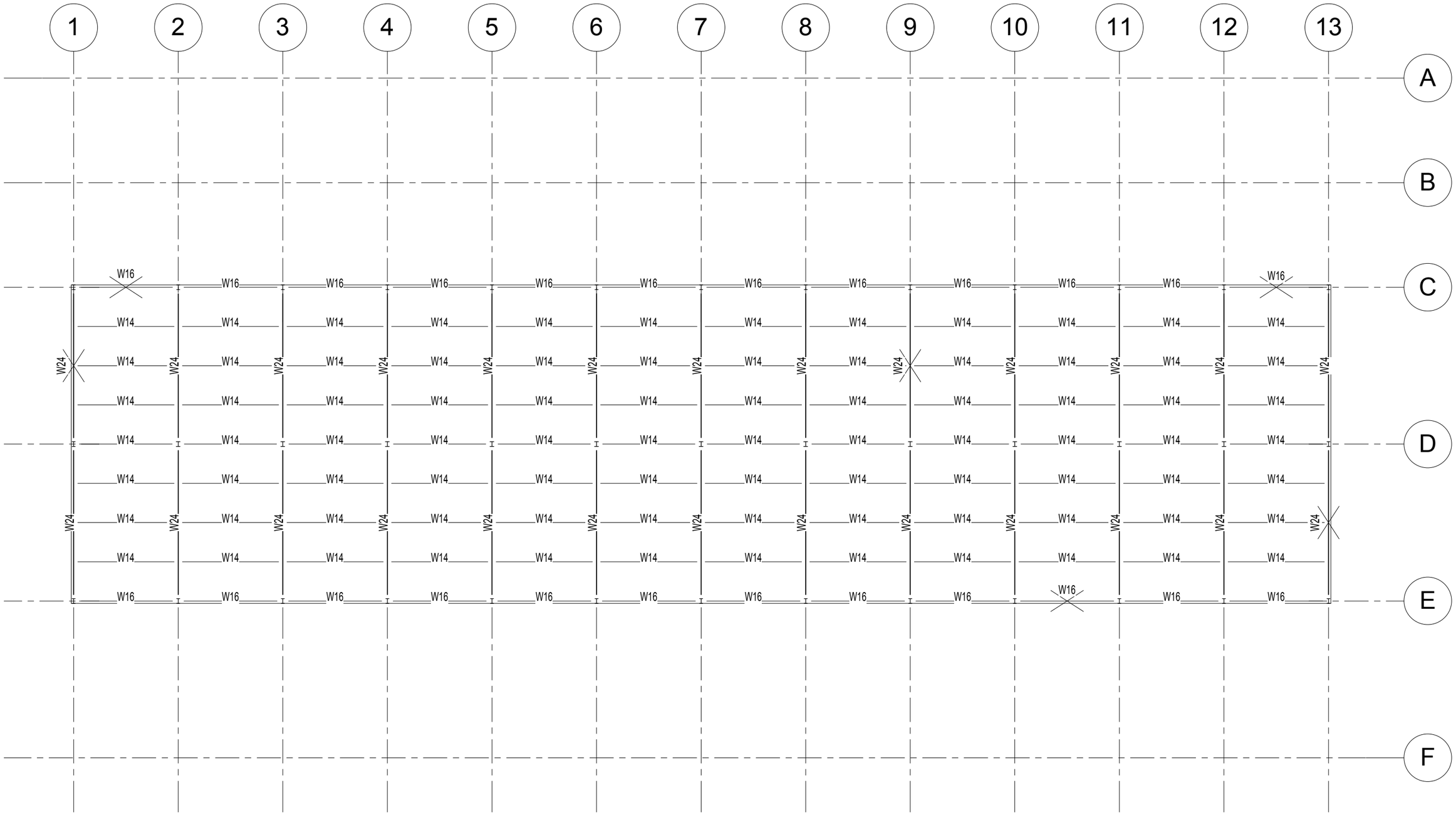

FOURTH FLOOR FRAMING PLAN

1" = 20'-0"

CRSA MWL

UNIFIED STATE LAB MODULE 2

Schematic Design Submittal

August 26, 2013

S204

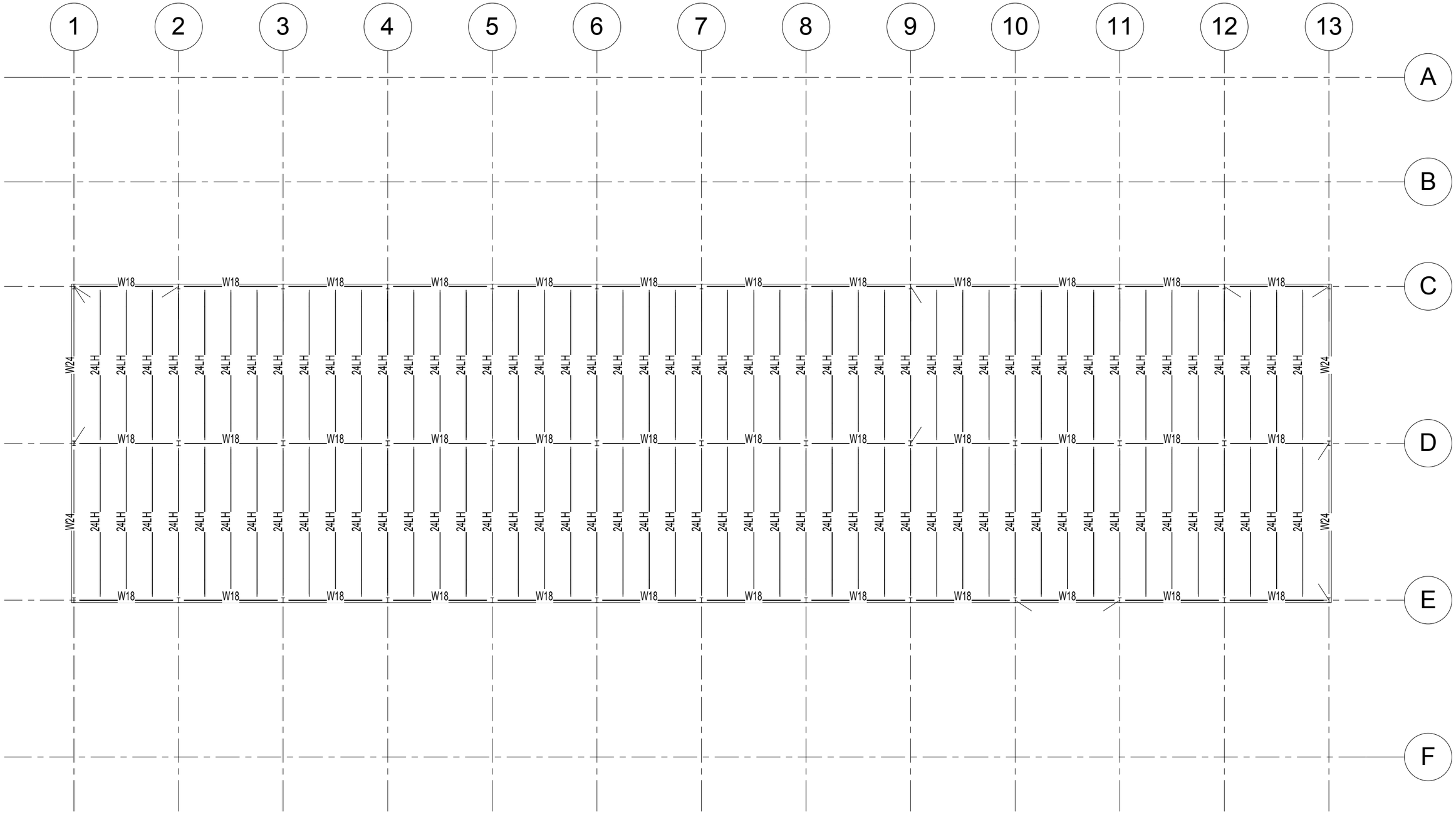

ROOF FRAMING PLAN

1" = 20'-0"

CRSA MWL

UNIFIED STATE LAB MODULE 2

Schematic Design Submittal

August 26, 2013

S205

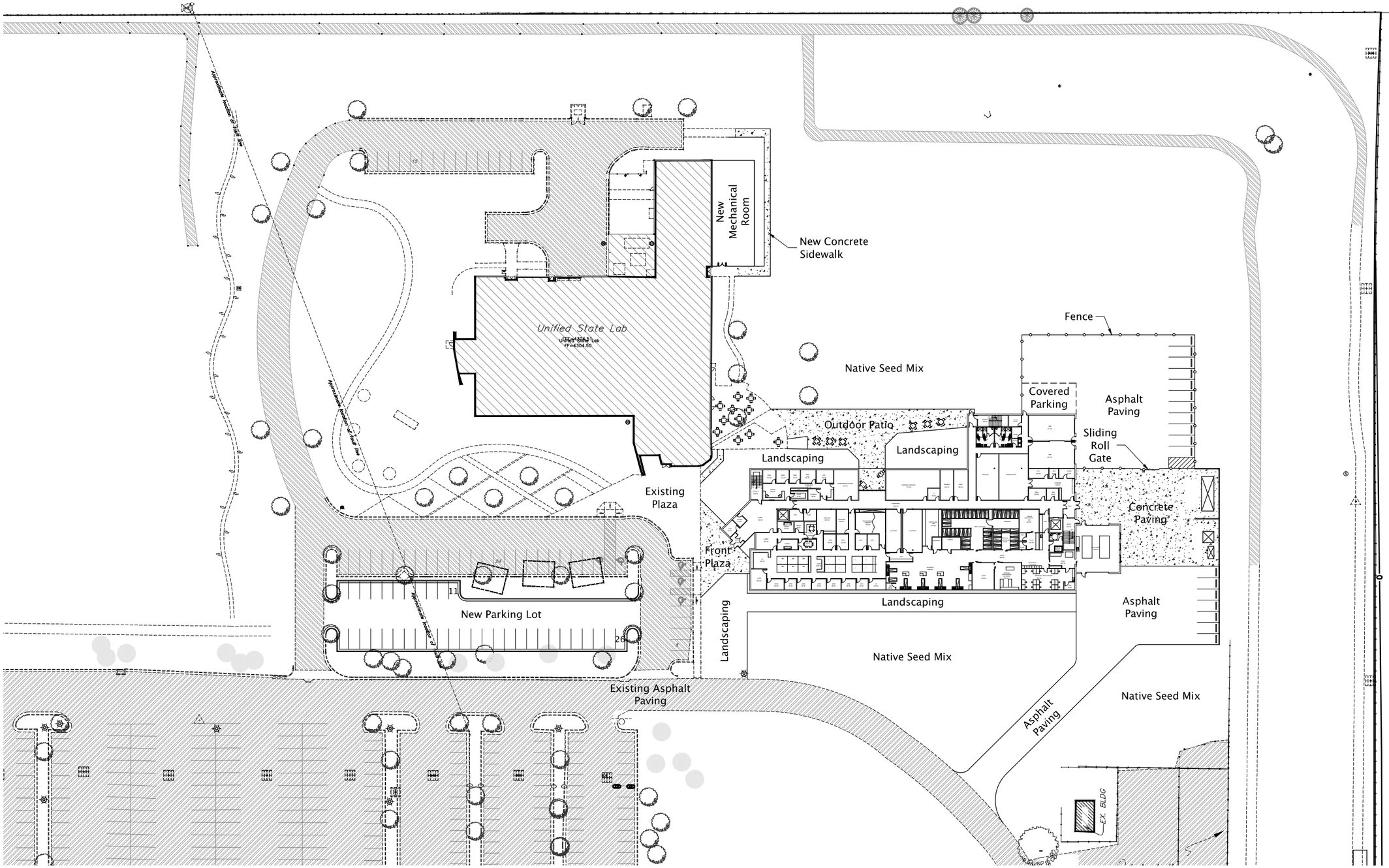

SITE PLAN
1" = 80'-0"

CRSA MWL

Unified State Lab Module 2
Schematic Design Submittal

August 26, 2013

AS101

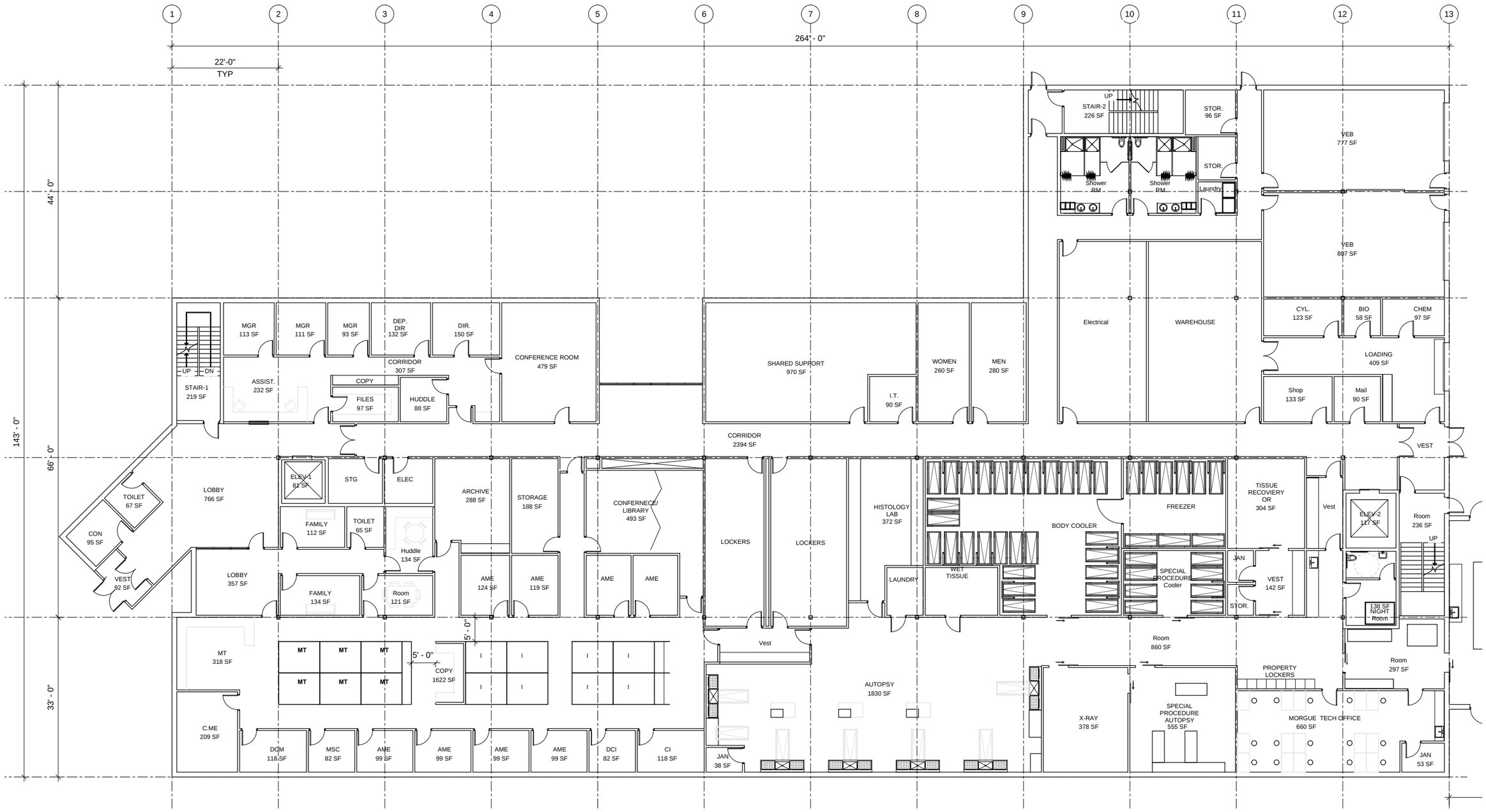

MAIN LEVEL FLOOR PLAN

1" = 20'-0"

CRSA MWL

UNIFIED STATE LAB MODULE 2

Schematic Design Submittal

August 26, 2013

AE101

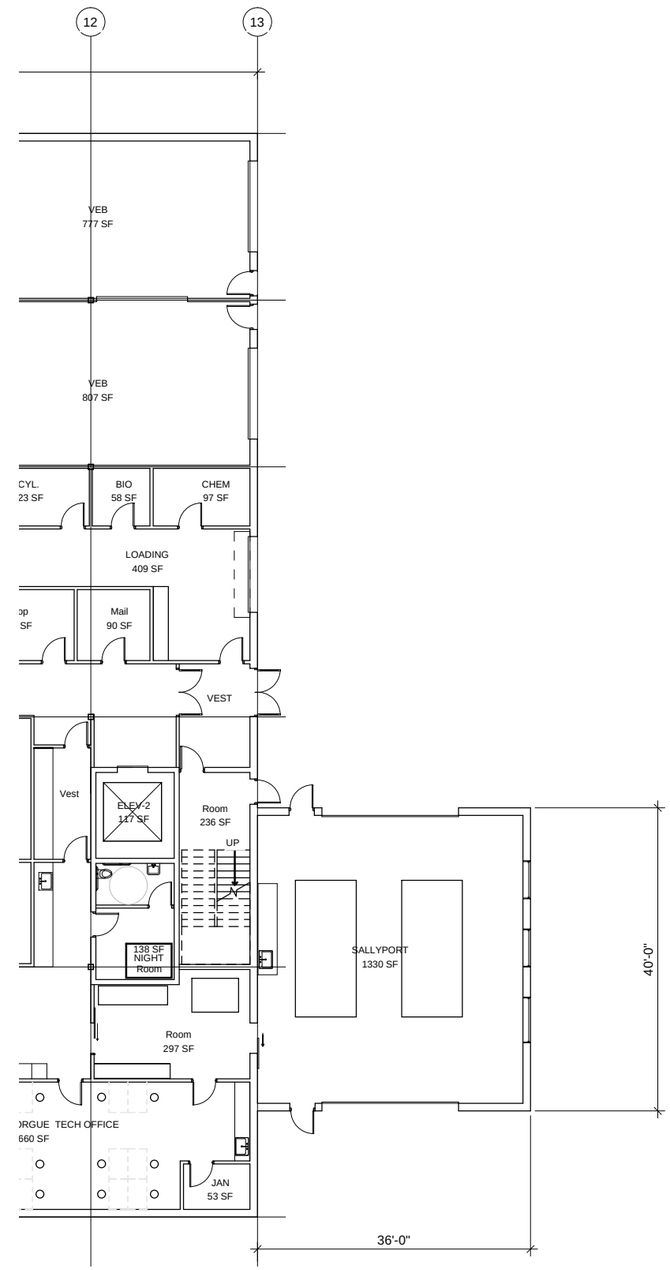

SALLY PORT PLAN

1" = 20'-0"

CRSA MWL

UNIFIED STATE LAB MODULE 2

Schematic Design Submittal

August 26, 2013

AE101A

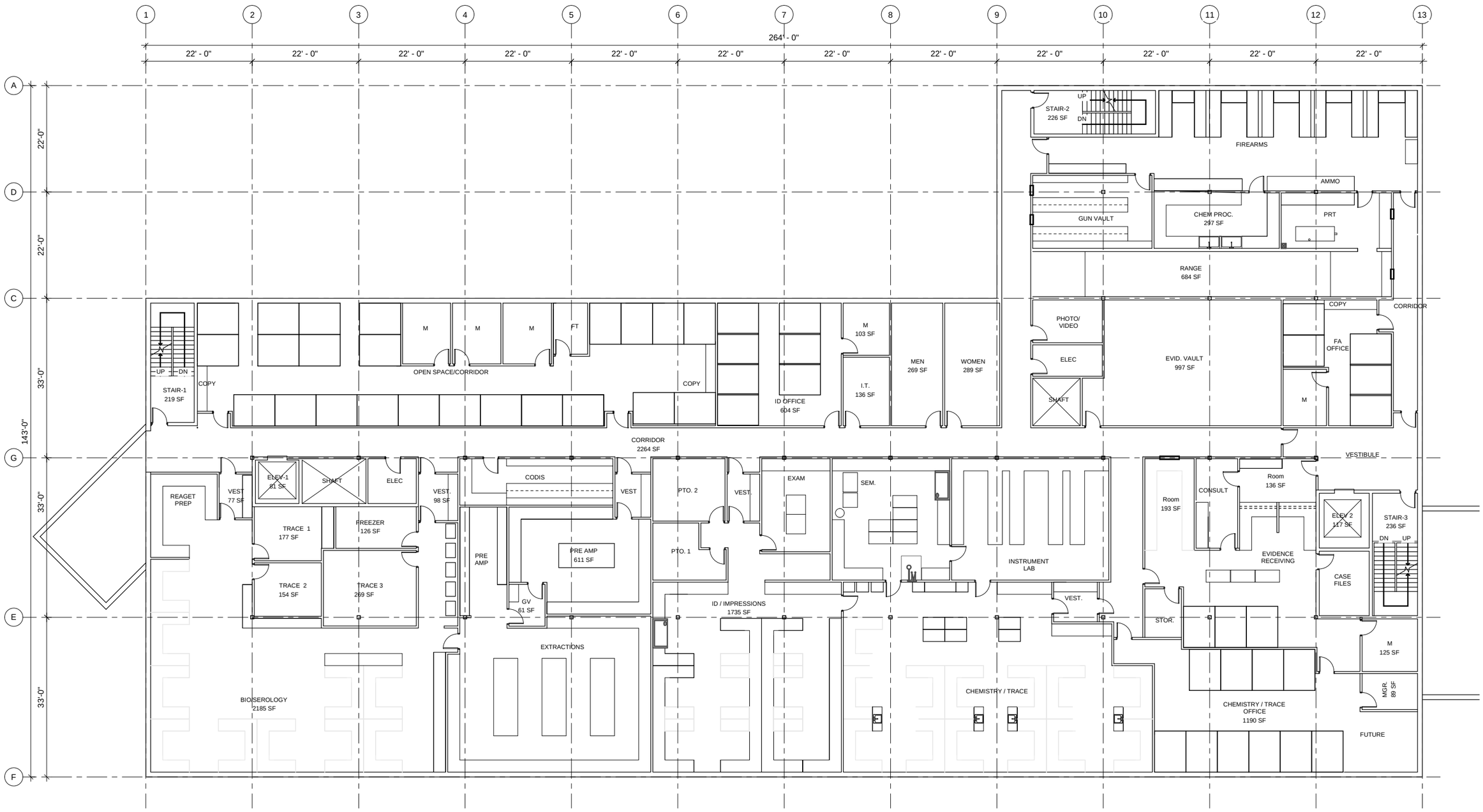

LEVEL 2 FLOOR PLAN

1" = 20'-0"

CRSA MWL

UNIFIED STATE LAB MODULE 2

Schematic Design Submittal

August 26, 2013

AE102

LEVEL 3 FLOOR PLAN

1" = 20'-0"

CRSA MWL

UNIFIED STATE LAB MODULE 2

Schematic Design Submittal

August 26, 2013

AE103

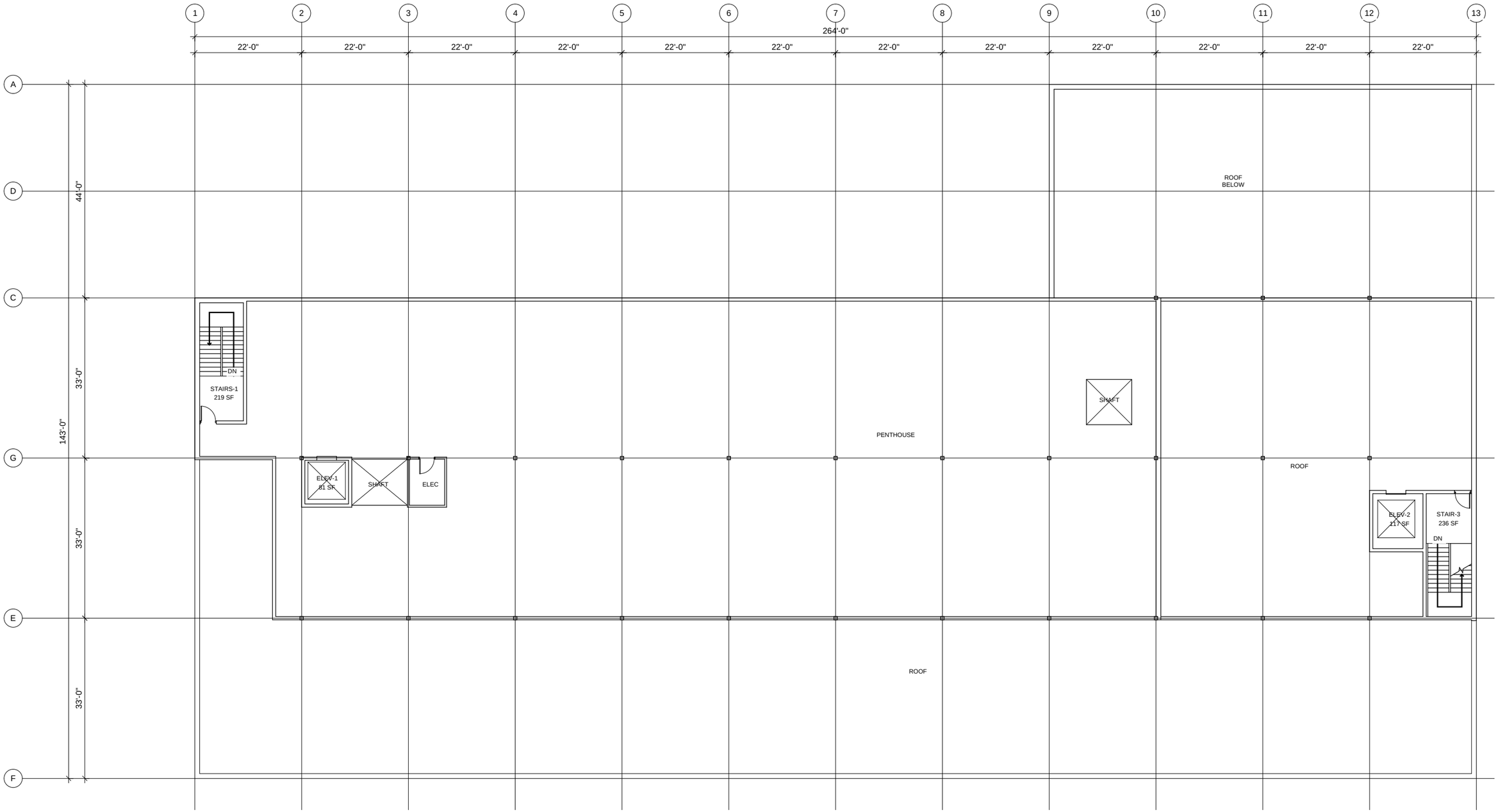

PENTHOUSE PLAN

1" = 20'-0"

CRSA MWL

UNIFIED STATE LAB MODULE 2

Schematic Design Submittal

August 26, 2013

AE104

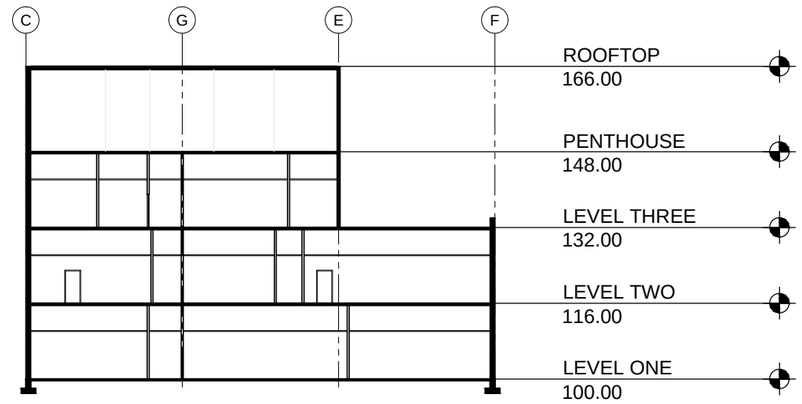

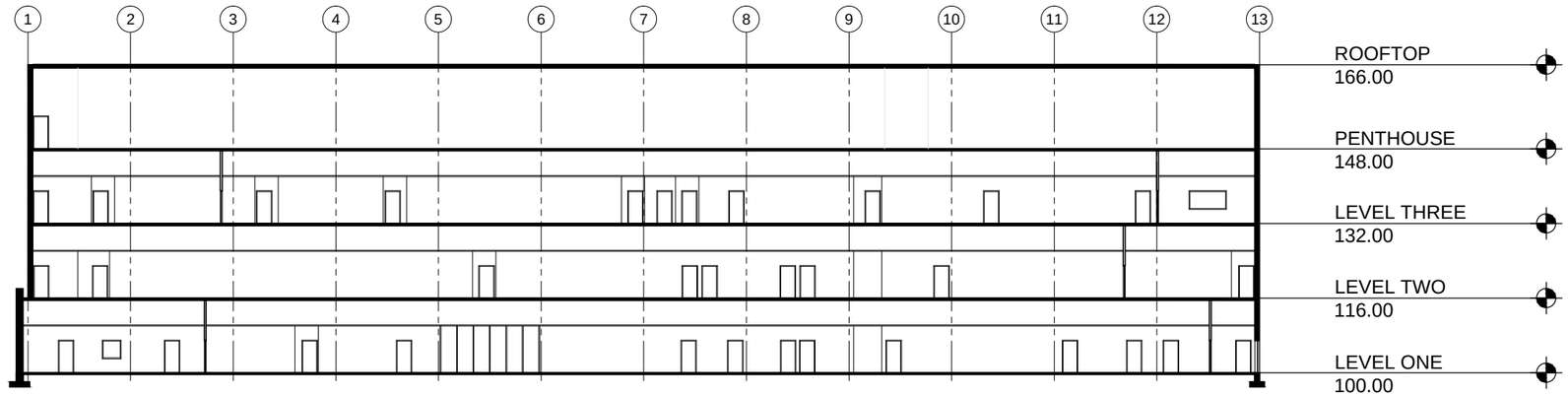

BUILDING SECTIONS

1/32" = 1'-0"

CRSA MWL

UNIFIED STATE LAB MODULE 2

Schematic Design Submittal

August 26, 2013

AE301

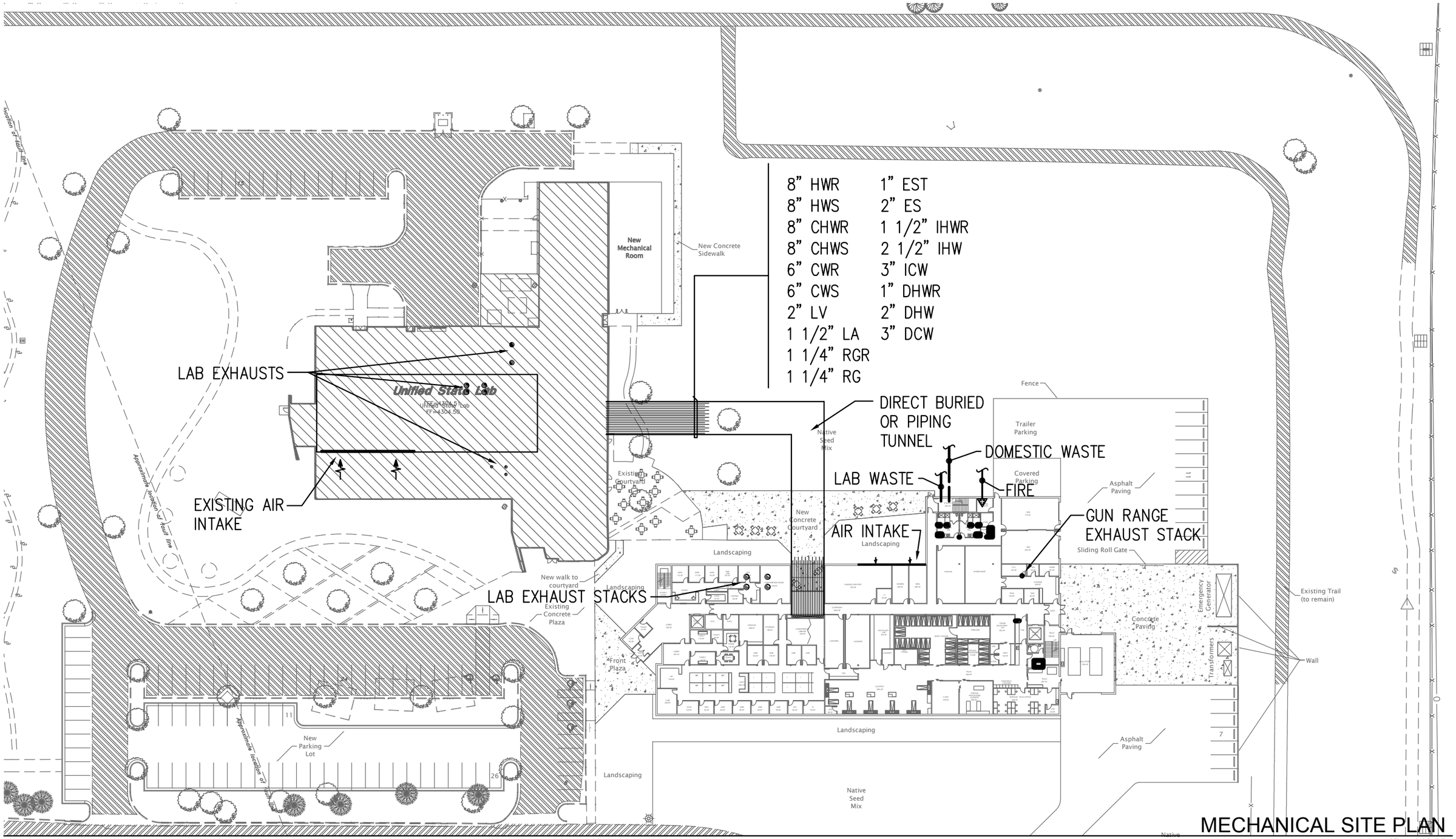

MECHANICAL SITE PLAN

1" = 60'-0"

CRSA MWL

UNIFIED STATE LAB MODULE 2

Schematic Design Submittal

August 26, 2013

M100

N:\13\13200\13245 Unified Lab Module 2\01_Cadd_MEP_Mechanical\13245-m100.dwg, 8/23/2013 11:42:23 AM

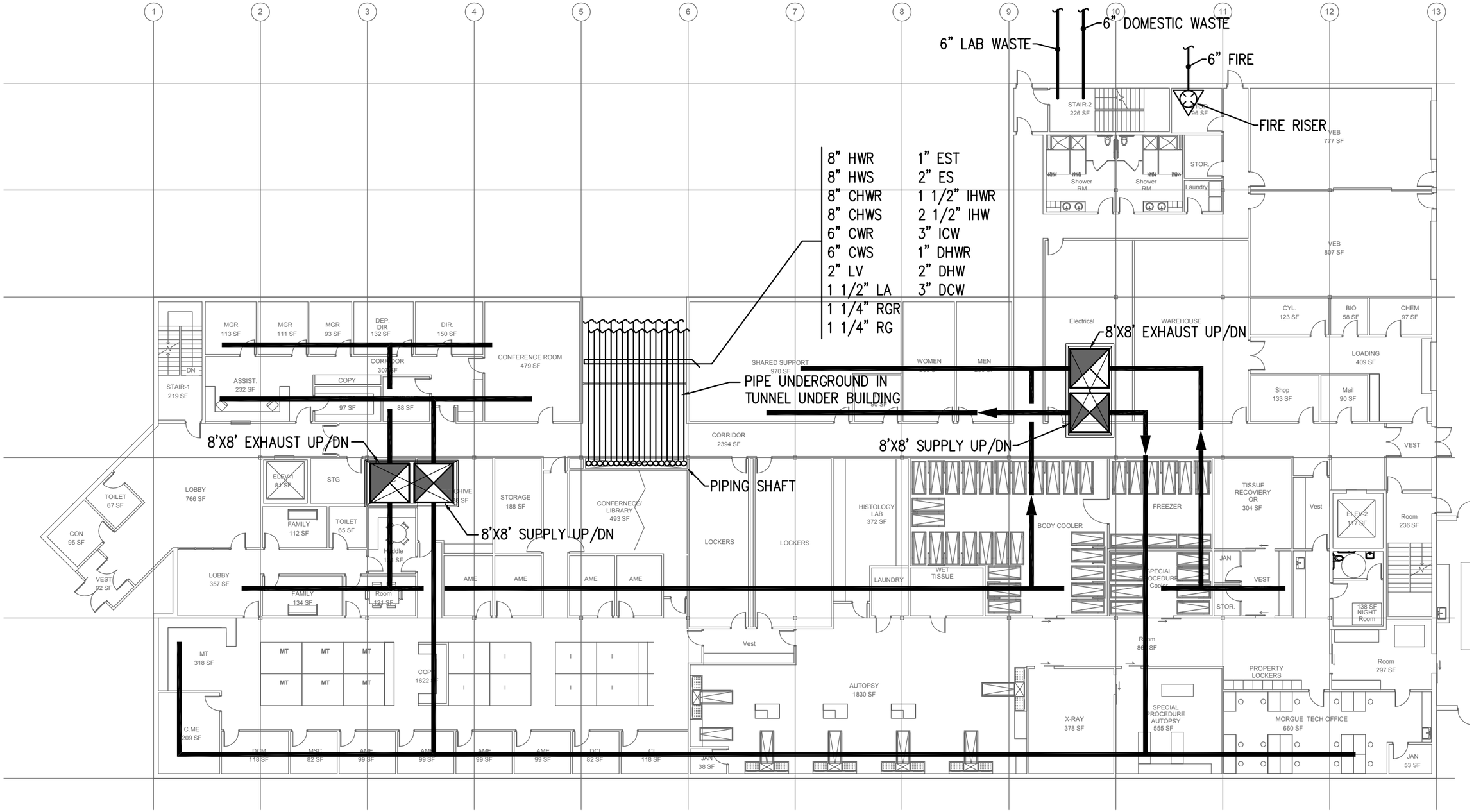

MAIN LEVEL MECHANICAL PLAN

1" = 20'-0"

CRSA MWL

UNIFIED STATE LAB MODULE 2

Schematic Design Submittal

August 26, 2013

M101

N:\13\13200\13245 Unified Lab Module 2\01_Cadd_MEP_Mechanical\13245-m101.dwg, 8/23/2013 11:44:32 AM

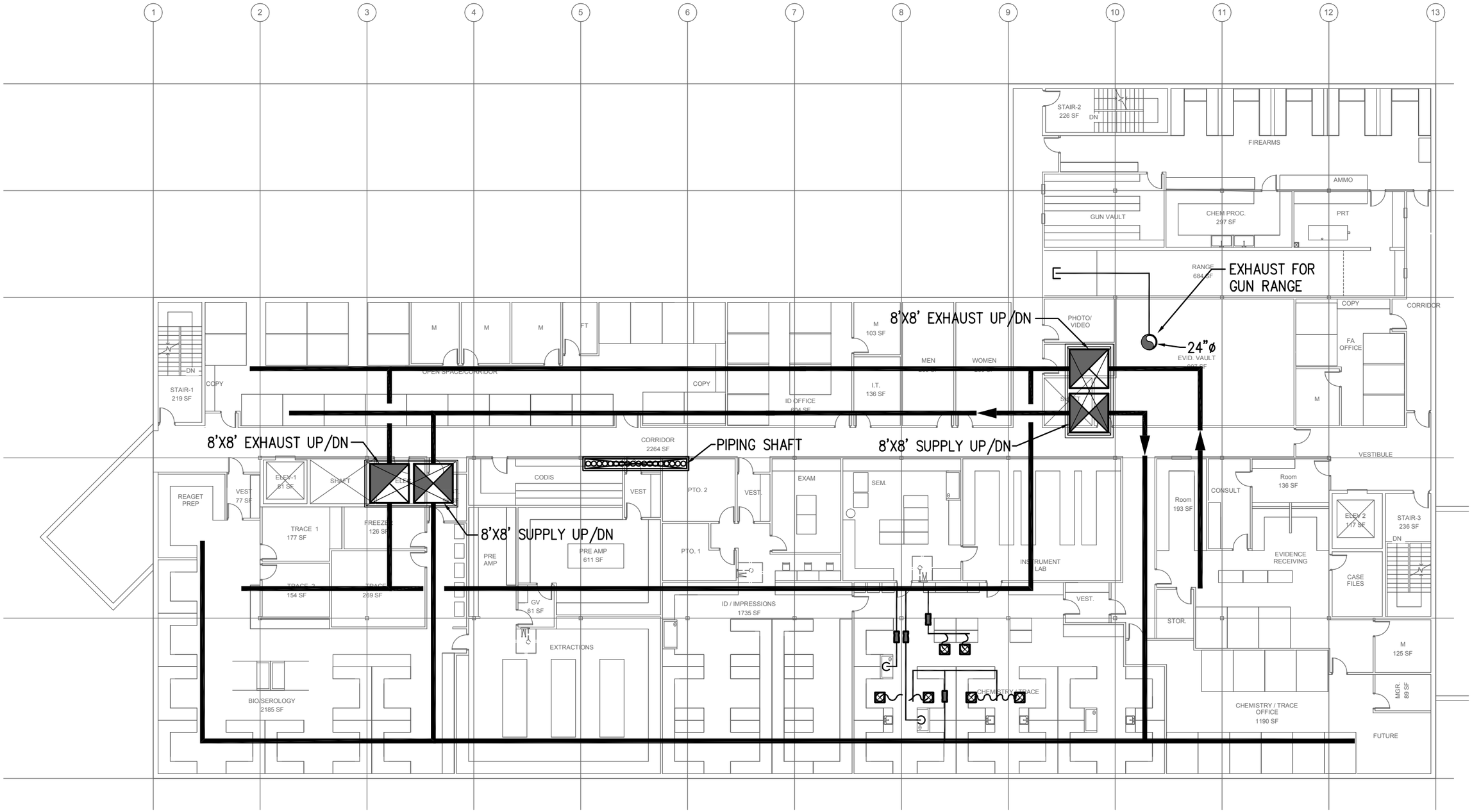

LEVEL 2 MECHANICAL PLAN

1" = 20'-0"

CRSA MWL

UNIFIED STATE LAB MODULE 2

Schematic Design Submittal

August 26, 2013

M102

N:\13\13200\13245 Unified Lab Module 2\01_Cadd_MEP_Mechanical\13245-m102.dwg, 8/23/2013 11:44:36 AM

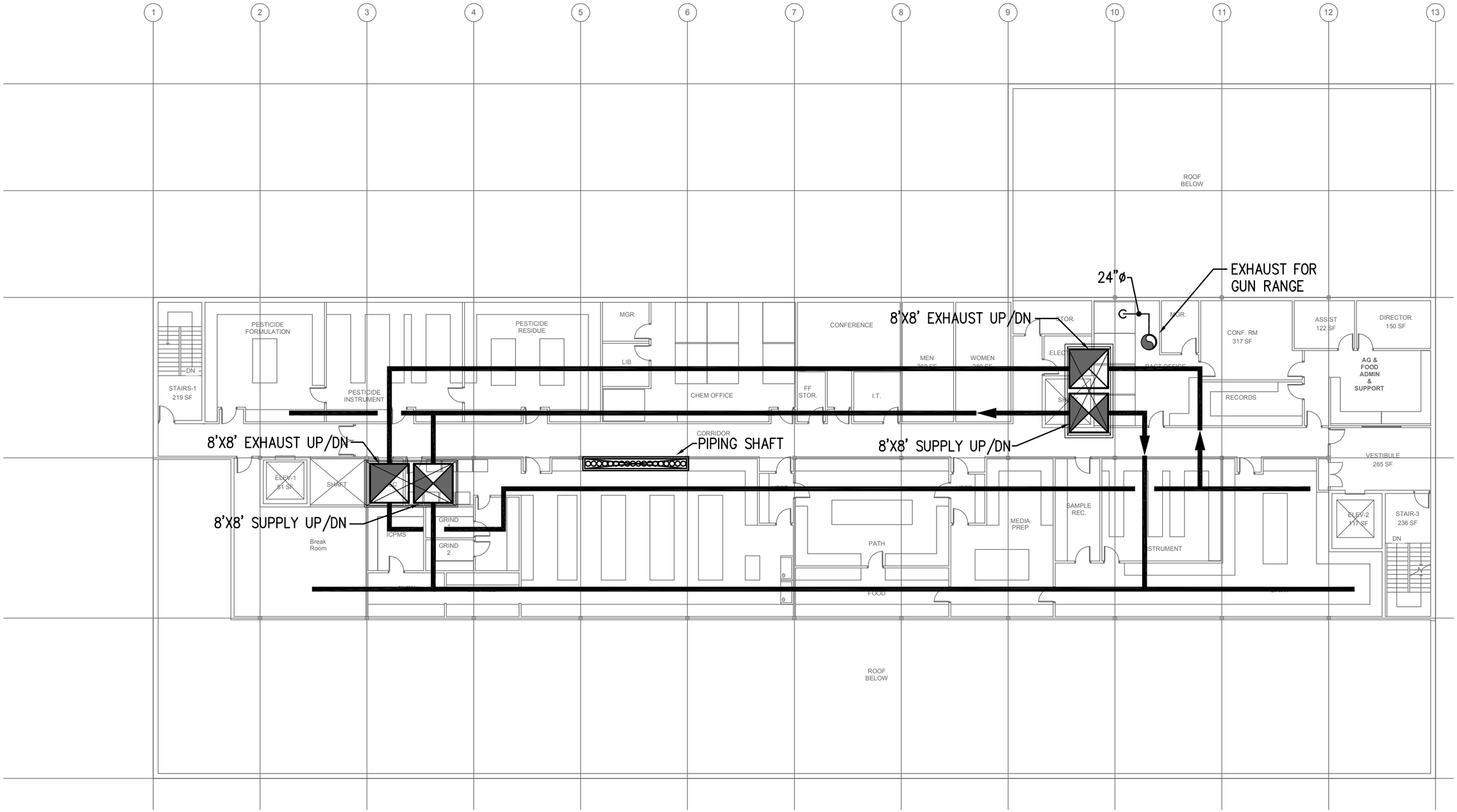

LEVEL 3 MECHANICAL PLAN

1" = 20'-0"

CRSA MWL

UNIFIED STATE LAB MODULE 2

Schematic Design Submittal

August 26, 2013

M103

N:\13\13200\13245 Unified Lab Module 2\01_Cadd_MEP_Mechanical\13245-m103.dwg, 8/23/2013 11:44:40 AM

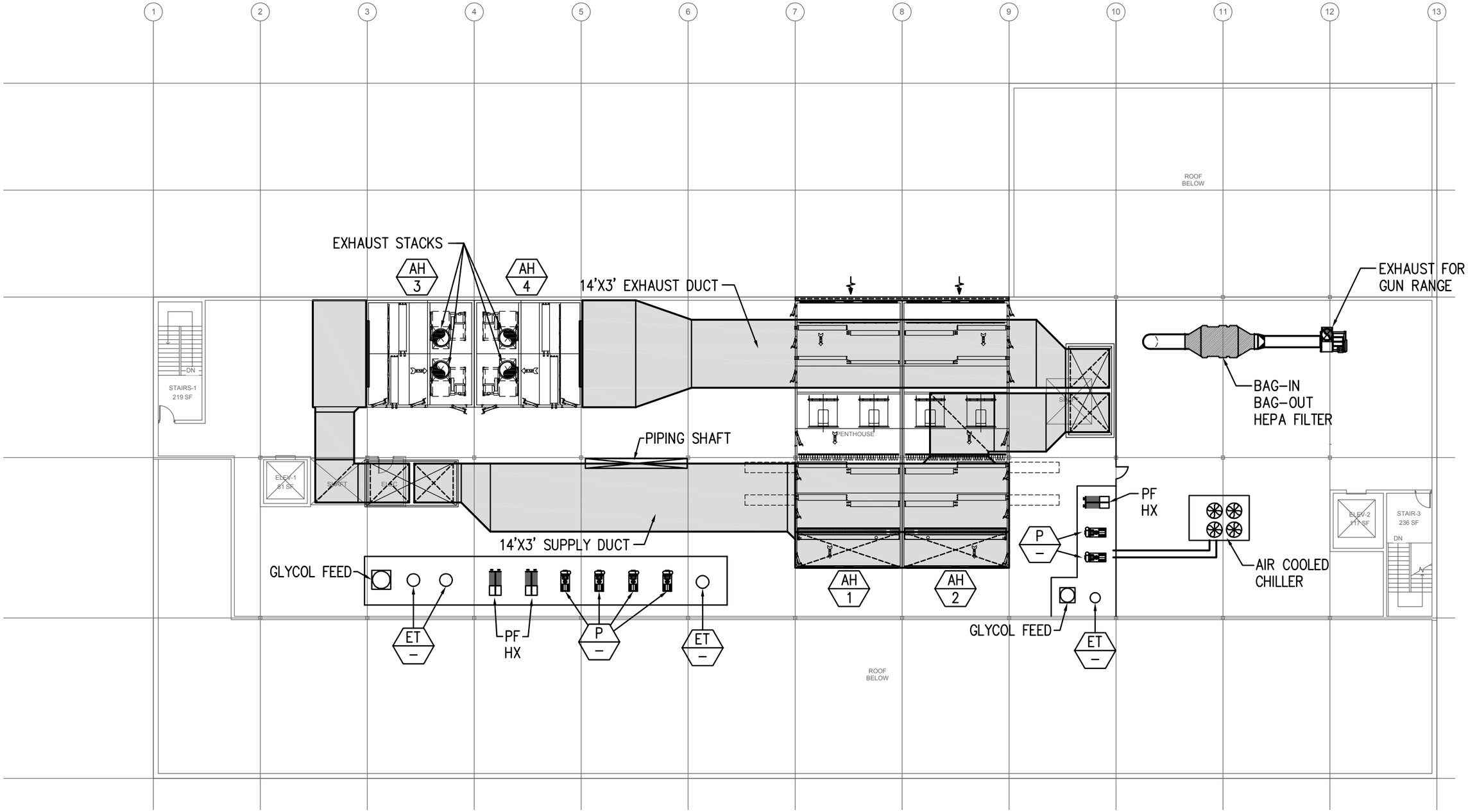

PENTHOUSE MECHANICAL PLAN

1" = 20'-0"

CRSA MWL

UNIFIED STATE LAB MODULE 2

Schematic Design Submittal

August 26, 2013

M104

N:\13\13200\13245 Unified Lab Module 2\01_Cadd_MEP_Mechanical\13245-m104.dwg, 8/23/2013 11:44:44 AM

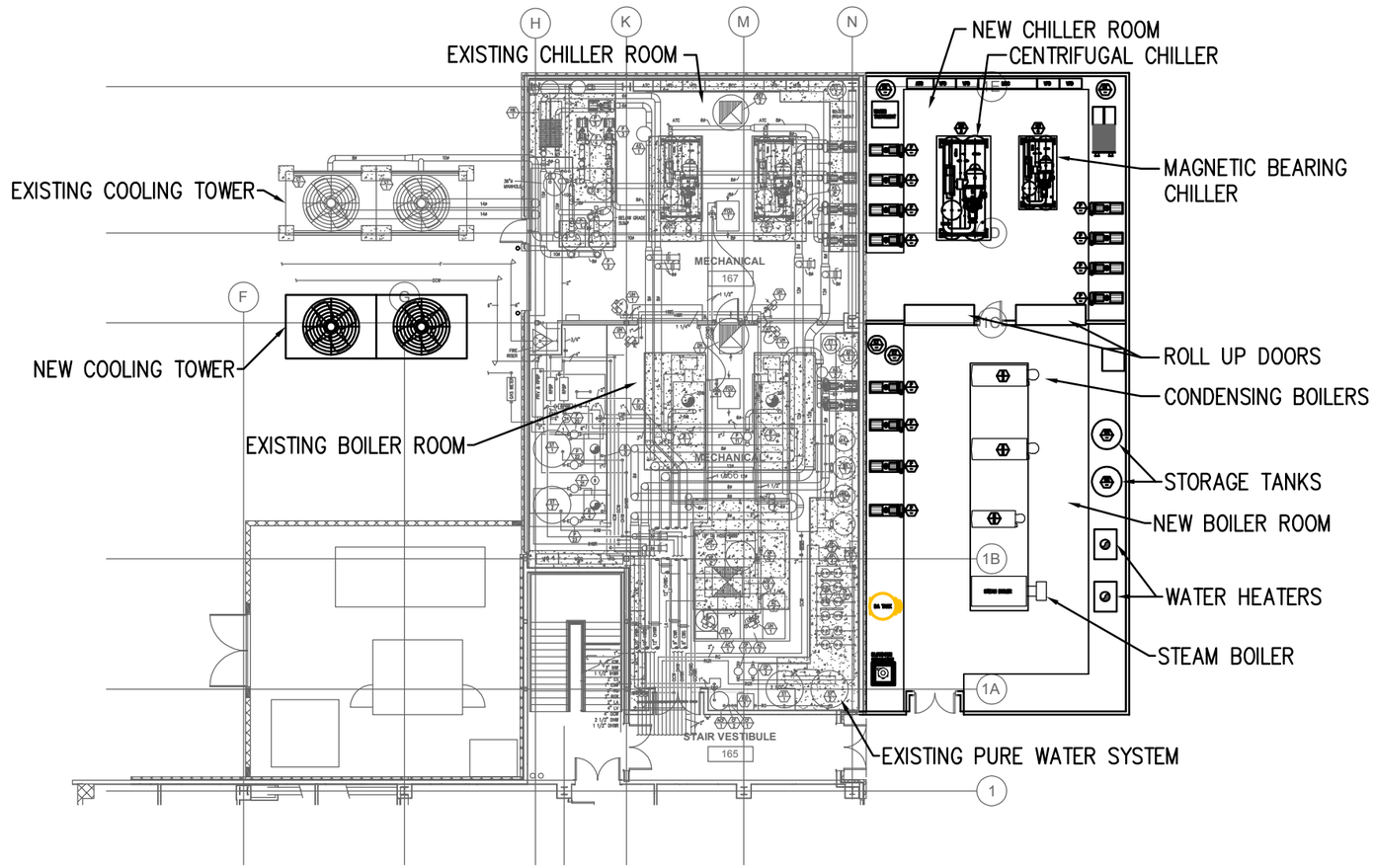

MECHANICAL ROOM PLAN

1" = 20'-0"

CRSA MWL

UNIFIED STATE LAB MODULE 2

Schematic Design Submittal

August 26, 2013

M105

N:\13\13200\13245 Unified Lab Module 2\01_Cadd_MEP_Mechanical\13245-m105.dwg, 8/23/2013 11:44:48 AM

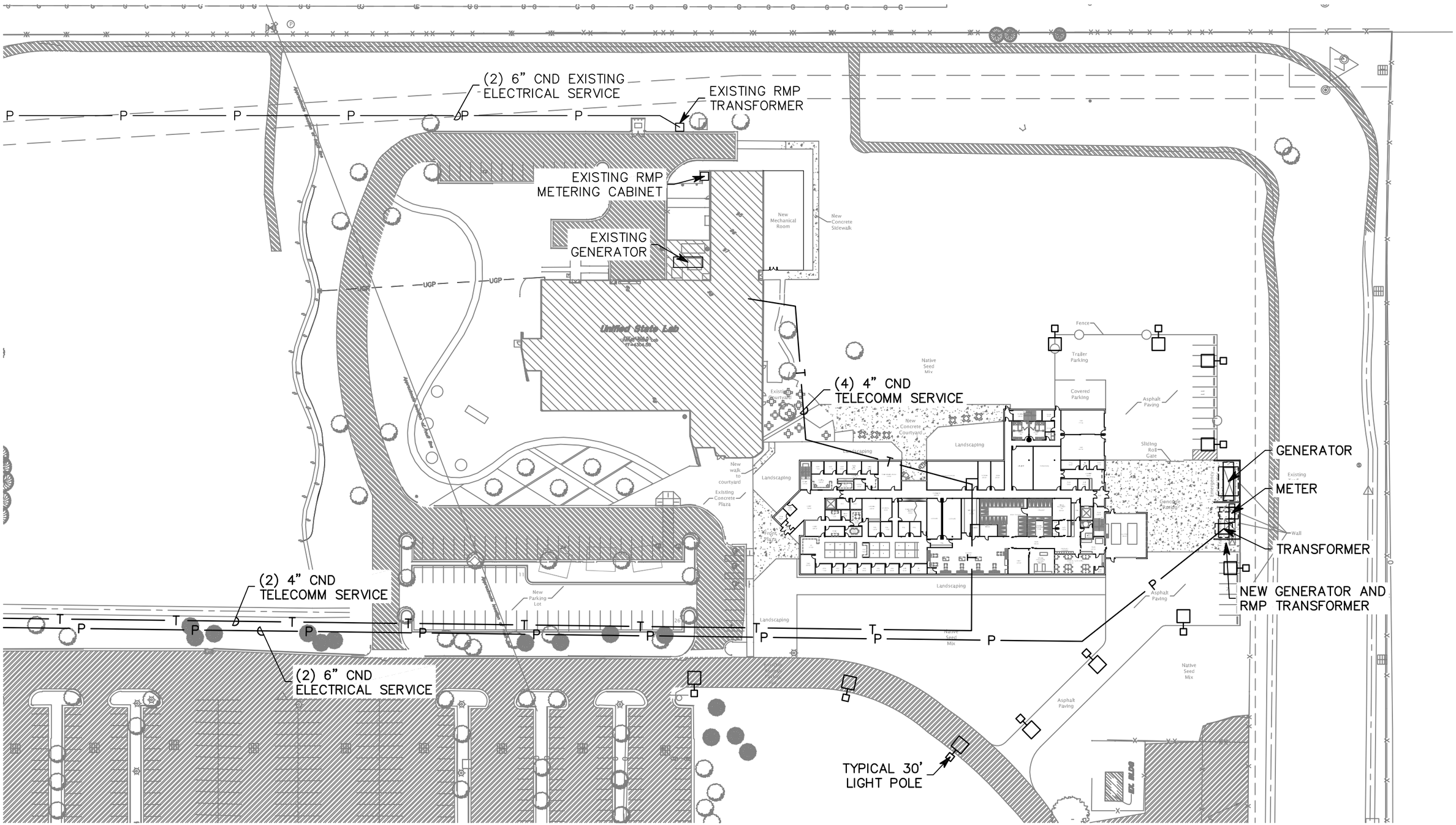

ELECTRICAL SITE PLAN

1" = 80'-0"

CRSA MWL

UNIFIED STATE LAB MODULE 2

Schematic Design Submittal

August 26, 2013

ES101

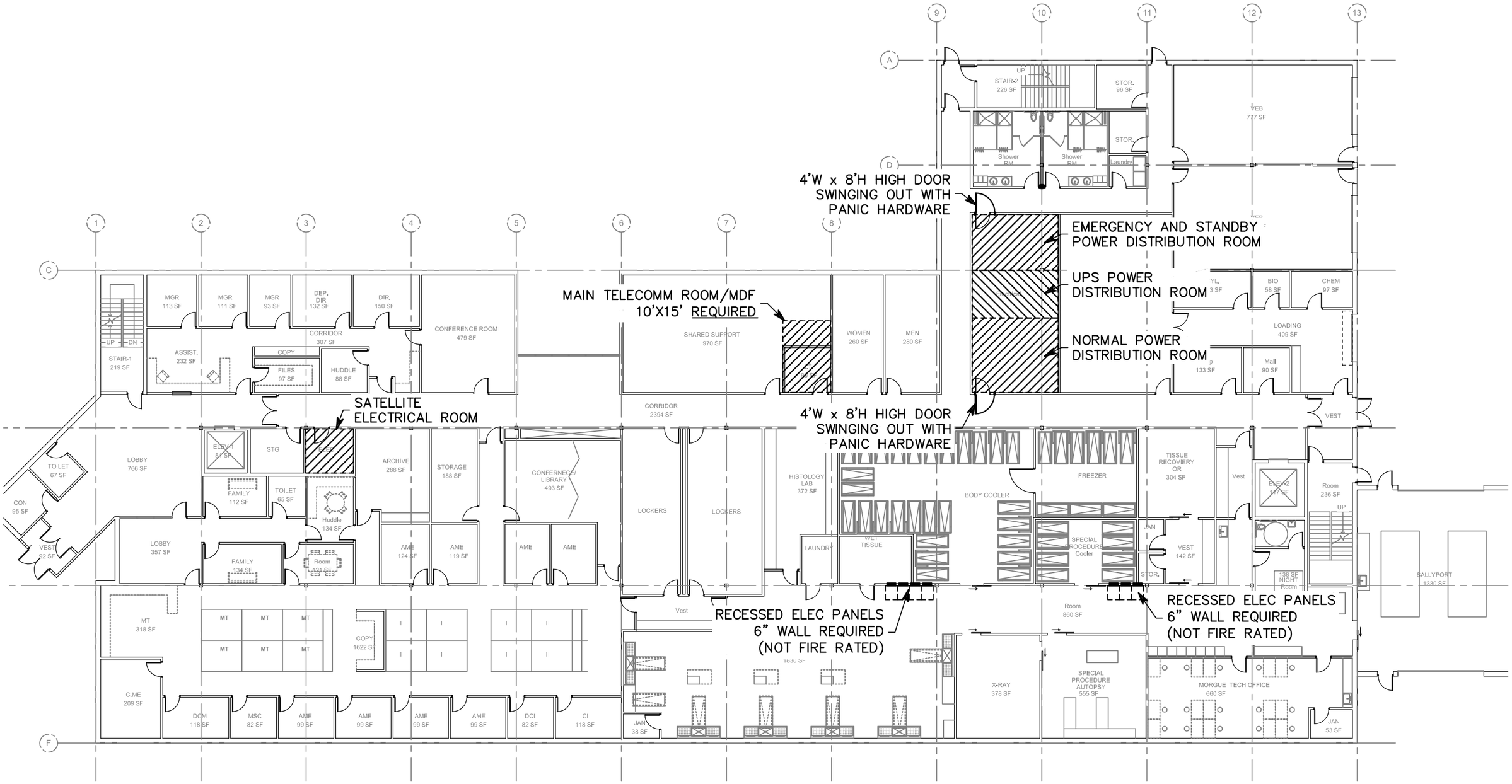

MAIN FLOOR ELECTRICAL PLAN

1" = 20'-0"

CRSA MWL

UNIFIED STATE LAB MODULE 2

Schematic Design Submittal

August 26, 2013

EE101

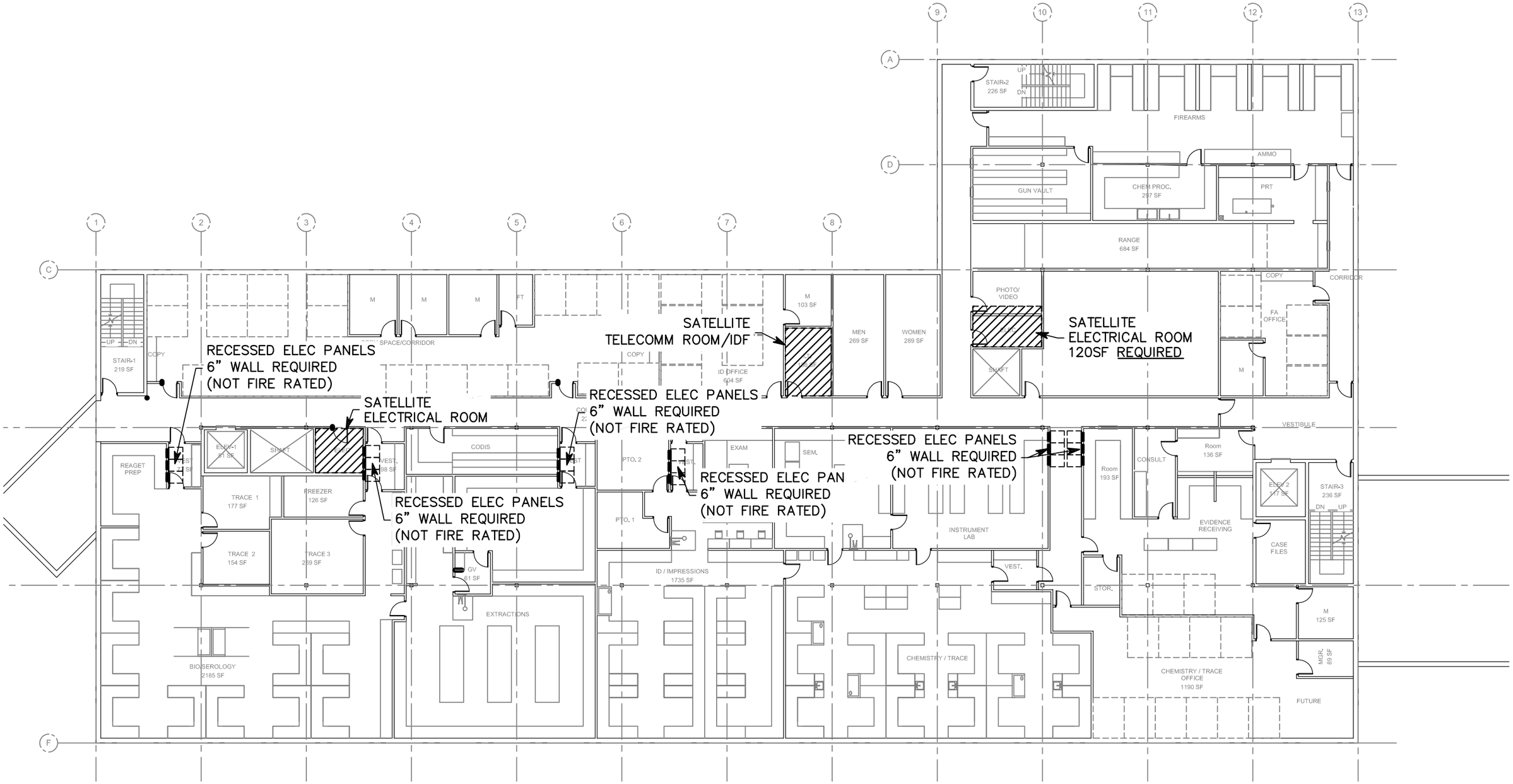

LEVEL 2 ELECTRICAL PLAN

1" = 20'-0"

CRSA MWL

UNIFIED STATE LAB MODULE 2

Schematic Design Submittal

August 26, 2013

EE102

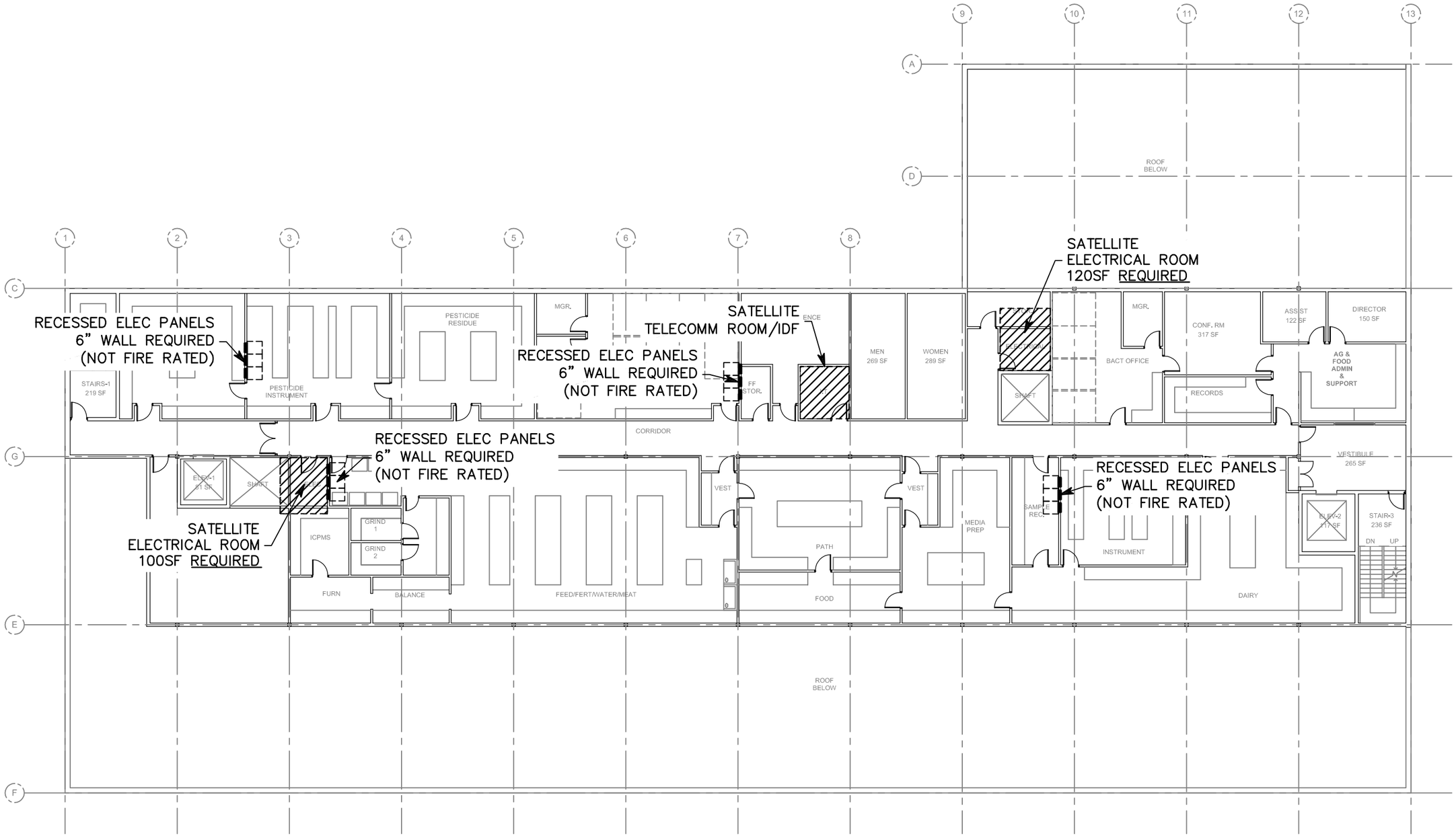

LEVEL 3 ELECTRICAL PLAN

1" = 20'-0"

CRSA MWL

UNIFIED STATE LAB MODULE 2

Schematic Design Submittal

August 26, 2013

EE103

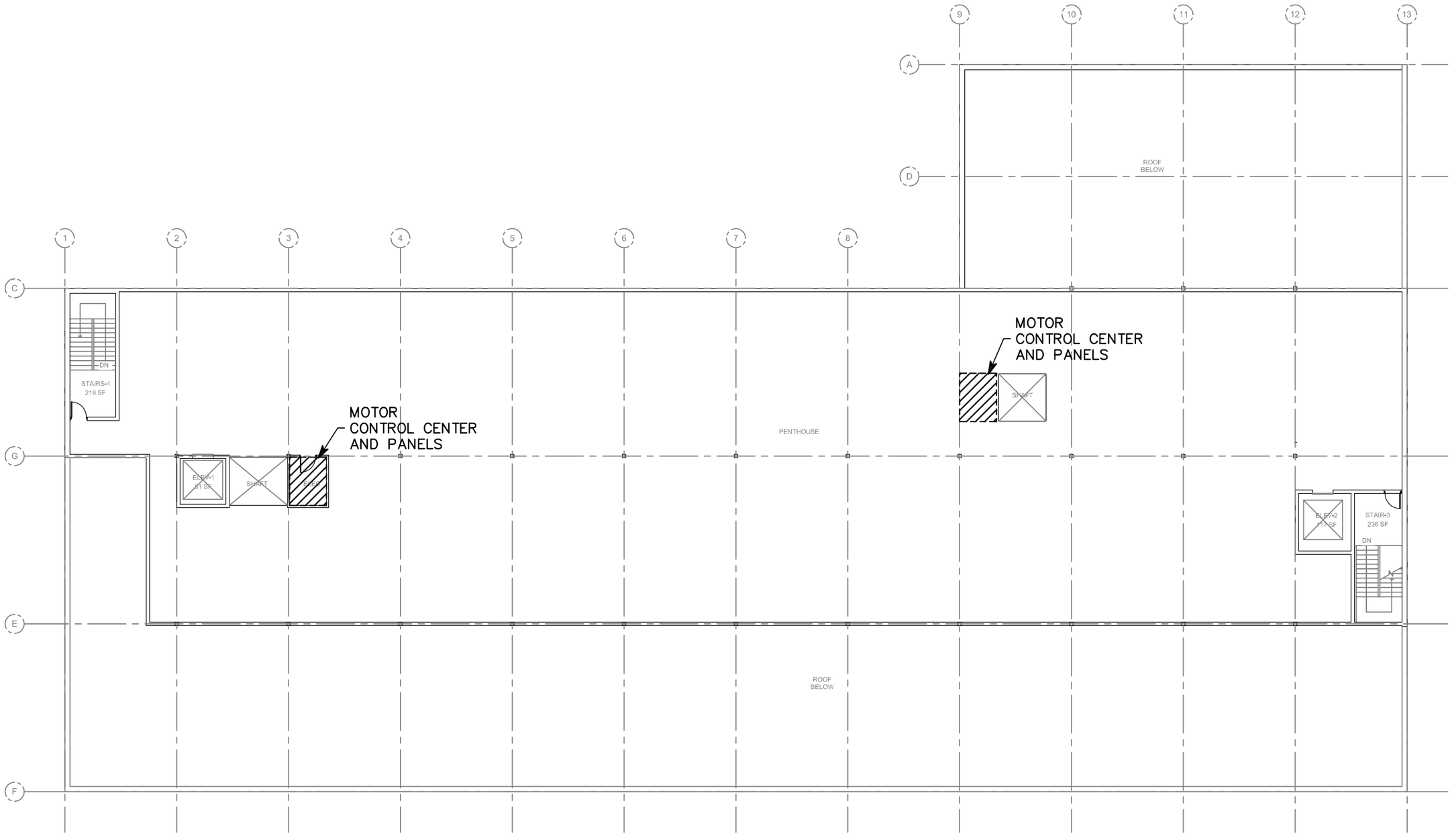

PENTHOUSE ELECTRICAL PLAN

1" = 20'-0"

CRSA MWL

UNIFIED STATE LAB MODULE 2

Schematic Design Submittal

August 26, 2013

EE104