Unified State Laboratory Module 2

4451 South 2700 West, Taylorsville, UT 84118

CRSA

649 E SOUTH TEMPLE
SLC, UT 84102
801.355.5915

www.crsa-us.com

MWL

11798 N. Lakeridge Pkwy.
Ashland, VA 23005
804-228-7473

www.mwlarchitects.com

Issue Type:
BID SET

Issue Date:
April 21, 2014

Project Number:
B13-024

DFCM Number:
13020300

Landscape
CRSA
649 S. East Temple
Salt Lake City, UT 84102
Contact Don Leslie
801.746.6832

Civil
Great Basin Engineering Inc
5746 S 1475 East
Ogden, UT 84403
Contact Coury Morris
801.521.0222

Structural
Dunn Associates Inc
380 W 800 South #100
Salt Lake City, UT 84101
Contact Tait Ketcham
801.575.8877

DUNN ASSOCIATES, INC
Consulting Structural Engineers
WWW.DUNN-SE.COM
PH: 801-575-8877 FAX: 801-575-8875

Mechanical / Plumbing
Van Boerum & Frank Associates Inc
330 S 300 East
Salt Lake City, UT 84111
Contact Don Bradshaw
801.530.3148

Electrical / Audio Visual
Spectrum Engineers
324 S State St.
Salt Lake City, UT 84111
Contact David Wesemann
801.328.5151

CRSA
649 E. South Temple
Salt Lake City, UT 84102
801.355.5915

MWL
11798 N. Lakeridge Pkwy.
Ashland, VA 23005
804-228-7473

State of Utah
Department of Administrative Services
Division of Facilities Construction & Management
4110 State Office Building
Salt Lake City, Utah 84114
Phone: (801) 538 - 3018
Fax: (801) 538 - 3267

DIVISION OF FACILITIES CONSTRUCTION AND MANAGEMENT
REVIEWED FOR CODE COMPLIANCE
SIGNATURE:
DATE: 08-05-2014

STATE OF UTAH #134096 MEHRDAD SAMIE LICENSED ARCHITECT
04-28-2014
ARCHITECT-ENGINEER STAMP

Unified State Laboratory Module 2
4451 South 2700 West, Taylorsville, UT 84118

DFCM #:	13020300
Project #:	B13-024
DATE:	ISSUE TYPE:
APRIL 21, 2014	BID SET
CHECKED BY	J. NIELSEN
DRAWN BY	F. PITORE

COVER SHEET

GI001
VOLUME 1

C:\Users\fernando\Documents_A_13024_Modli_2013_fernando.rvt
7/14/2014 11:32:4 PM

SHEET INDEX VOLUME I

GENERAL

COVER SHEET	GI001
INDEX & VICINITY MAP	GI002
CODE SUMMARY	GI003
SPECIAL INSPECTIONS	GI004
SPECIAL INSPECTIONS	GI005
SITE CODE PLAN	GI006
CENTRAL PLANT ADDITION CODE PLAN	GI007
LEVEL 1 & 2 CODE PLAN	GI008
LEVEL 3 & PENTHOUSE CODE PLAN	GI009
UL DETAILS	GF001
UL DETAILS	GF002
UL DETAILS	GF003
UL DETAILS	GF004
UL DETAILS	GF005
UL DETAILS	GF006
UL DETAILS	GF007
UL DETAILS	GF008
UL DETAILS	GF009
UL DETAILS	GF010
UL DETAILS	GF011
UL DETAILS	GF012
UL DETAILS	GF013
UL DETAILS	GF014
UL DETAILS	GF015
UL DETAILS	GF016
UL DETAILS	GF017
LEVEL 1&2 FIRE RATING PLAN	GI010
LEVEL 3 & PENTHOUSE FIRE RATING PLAN	GI011

LANDSCAPE

SITE PLAN	LS100
SITE CALLOUT PLAN	LS101
SITE SCORE JOINT PLAN	LS201
SITE LAYOUT PLAN	LS301
SITE PLANTING PLAN	LS401
SITE IRRIGATION PLAN	LS501
SITE IRRIGATION PLAN	LS502
SITE DETAILS	LS600
SITE DETAILS	LS601
SITE DETAILS	LS602

CIVIL

DEMOLITION PLAN	C000
SITE PLAN	C100
GRADING & DRAINAGE PLAN	C200
UTILITY PLAN	C300
CONSTRUCTION DETAIL - 1	C400
CONSTRUCTION DETAIL - 2	C401
CONSTRUCTION DETAIL - 3	C402
CONSTRUCTION DETAIL - 4	C403
STORM WATER POLUTION PREVENTION PLAN	C500

STRUCTURAL

GENERAL STRUCTURAL NOTES	S001
GENERAL STRUCTURAL NOTES	S002
GENERAL STRUCTURAL NOTES	S003
GENERAL STRUCTURAL NOTES	S004
GENERAL STRUCTURAL NOTES	S005
FOOTING AND FOUNDATION PLAN - AREA A	S101A
FOOTING AND FOUNDATION PLAN - AREA B	S101B
FOOTING AND FOUNDATION PLAN - AREA C	S101C
FOOTING AND FOUNDATION PLANS - AREA D AND TUNNEL PLANS	S101D
LEVEL 2 FLOOR FRAMING PLAN - AREA A	S102A
LEVEL 2 FLOOR FRAMING PLAN - AREA B	S102B
LEVEL 2 FLOOR FRAMING PLAN - AREA C	S102C
ROOF FRAMING PLAN - AREA D	S102D
LEVEL 3 FLOOR FRAMING PLAN - AREA A	S103A
LEVEL 3 FLOOR FRAMING PLAN - AREA B	S103B
LEVEL 3 FLOOR FRAMING PLAN - AREA C	S103C
GUN RANGE LID PLAN	S103D
PENTHOUSE FLOOR/ ROOF FRAMING PLAN - AREA A	S104A
PENTHOUSE FLOOR/ ROOF FRAMING PLAN - AREA B	S104B
PENTHOUSE FLOOR/ ROOF FRAMING PLAN - AREA C	S104C
PENTHOUSE ROOF FRAMING PLANS	S105
CARPORT PLANS AND DETAILS	S106
SCHEDULES	S301
SCHEDULES	S302
SCHEDULES	S303
SCHEDULES	S304
ELEVATIONS	S401
ELEVATIONS	S402
ELEVATIONS	S403
MOMENT FRAME DETAILS	S404
BRACED FRAME DETAILS	S405
FRAME DETAILS	S406
FRAME DETAILS	S407
FOOTING AND FOUNDATION DETAILS	S501
FOOTING AND FOUNDATION DETAILS	S502
FOOTING AND FOUNDATION DETAILS	S503
FOOTING AND FOUNDATION DETAILS	S504
FLOOR FRAMING DETAILS	S601
FLOOR FRAMING DETAILS	S602
FLOOR FRAMING DETAILS	S603
FLOOR FRAMING DETAILS	S604
FLOOR FRAMING DETAILS	S605
FLOOR FRAMING DETAILS	S606
FLOOR FRAMING DETAILS	S607
FLOOR FRAMING DETAILS	S608
FLOOR FRAMING DETAILS	S609
ROOF FRAMING DETAILS	S701
ROOF FRAMING DETAILS	S702
ROOF FRAMING DETAILS	S703
ROOF FRAMING DETAILS	S704
ROOF FRAMING DETAILS	S705

ARCHITECTURAL

GENERAL NOTES & LEGENDS	AE001
WALL TYPES	AE002
ROOF TYPES & DETAILS	AE003
ACCESSORY MOUNTING HEIGHTS	AE004
ORIENTATION PLAN	AS101
CARPORT & TUNNEL PLAN	AS102
DETAILS	AS301
LEVEL 1 OVERALL PLAN	AE101
LEVEL 1 PLAN AREA A	AE101A
LEVEL 1 DIMENSION PLAN AREA A	AE101A.D
LEVEL 1 PLAN AREA B	AE101B
LEVEL 1 DIMENSION PLAN AREA B	AE101B.D
LEVEL 1 PLAN AREA C	AE101C
LEVEL 1 DIMENSION PLAN AREA C	AE101C.D
LEVEL 1 PLAN AREA D	AE101D
LEVEL 2 OVERALL PLAN	AE102
LEVEL 2 PLAN AREA A	AE102A
LEVEL 2 DIMENSION PLAN AREA A	AE102A.D
LEVEL 2 PLAN AREA B	AE102B
LEVEL 2 DIMENSION PLAN AREA B	AE102B.D
LEVEL 2 PLAN AREA C	AE102C
LEVEL 2 DIMENSION PLAN AREA C	AE102C.D
LEVEL 3 OVERALL PLAN	AE103
LEVEL 3 PLAN AREA A	AE103A
LEVEL 3 DIMENSION PLAN AREA A	AE103A.D
LEVEL 3 PLAN AREA B	AE103B
LEVEL 3 DIMENSION PLAN AREA B	AE103B.D
PENTHOUSE LEVEL FLOOR PLAN	AE104
LEVEL 1 AREA A FINISH PLAN	AE105A
LEVEL 1 AREA B FINISH PLAN	AE105B
LEVEL 1 AREA C FINISH PLAN	AE105C
LEVEL 1 AREA D FINISH PLAN	AE105D
LEVEL 2 AREA A FINISH PLAN	AE106A
LEVEL 2 AREA B FINISH PLAN	AE106B
LEVEL 2 AREA C FINISH PLAN	AE106C
LEVEL 3 AREA A FINISH PLAN	AE107A
LEVEL 3 AREA B FINISH PLAN	AE107B
PENTHOUSE LEVEL FINISH PLAN	AE108
LEVEL 1 AREA A REFLECTED CEILING PLAN	AE109A
LEVEL 1 AREA B REFLECTED CEILING PLAN	AE109B
LEVEL 1 AREA C REFLECTED CEILING PLAN	AE109C
LEVEL 1 AREA D REFLECTED CEILING PLAN	AE109D
LEVEL 2 AREA A REFLECTED CEILING PLAN	AE110A
LEVEL 2 AREA B REFLECTED CEILING PLAN	AE110B
LEVEL 2 AREA C REFLECTED CEILING PLAN	AE110C
LEVEL 3 AREA A REFLECTED CEILING PLAN	AE111A
LEVEL 3 AREA B REFLECTED CEILING PLAN	AE111B
LEVEL 1 AREA A SLAB EDGE PLAN	AE112A
LEVEL 1 AREA B SLAB EDGE PLAN	AE112B
LEVEL 1 AREA C SLAB EDGE PLAN	AE112C
LEVEL 1 AREA D SLAB EDGE PLAN	AE112D
LEVEL 2 AREA A SLAB EDGE PLAN	AE113A
LEVEL 2 AREA B SLAB EDGE PLAN	AE113B
LEVEL 2 AREA C SLAB EDGE PLAN	AE113C
LEVEL 3 AREA A SLAB EDGE PLAN	AE114A
LEVEL 3 AREA B SLAB EDGE PLAN	AE114B
PENTHOUSE LEVEL SLAB EDGE PLAN	AE115
UPPER ROOF PLAN	AE120
LOWER ROOF PLAN	AE121
LEVEL 1 FURNISHING PLAN	AE130
LEVEL 2 FURNISHING PLAN	AE131
LEVEL 3 FURNISHING PLAN	AE132
EXTERIOR ELEVATIONS	AE201
EXTERIOR ELEVATIONS	AE202
EXTERIOR ELEVATIONS	AE203
ENLARGED ELEVATIONS	AE204
MOCK-UPS	AE205
BUILDING SECTION	AE301
BUILDING SECTION	AE302
WALL SECTIONS	AE303
WALL SECTIONS	AE304
ENLARGED FLOOR PLANS & INTERIOR ELEVATIONS	AE401
ENLARGED FLOOR PLANS & INTERIOR ELEVATIONS	AE402
ENLARGED FLOOR PLANS & INTERIOR ELEVATIONS	AE403
ENLARGED FLOOR PLANS & INTERIOR ELEVATIONS	AE404
ENLARGED FLOOR PLANS & INTERIOR ELEVATIONS	AE405
STAIR ENLARGED PLANS & SECTIONS	AE430
STAIR ENLARGED PLANS & SECTIONS	AE431
STAIR ENLARGED PLANS & SECTIONS	AE432
ELEVATOR ENLARGED PLANS & SECTIONS	AE433
DETAILS	AE501
DETAILS	AE502
DETAILS	AE503
DETAILS	AE504
DETAILS	AE505
DETAILS	AE506
DETAILS	AE507
DETAILS	AE508
DETAILS	AE510
DETAILS	AE511
DETAILS	AE512
DETAILS	AE513
DETAILS	AE514
DETAILS	AE520
DETAILS	AE530
DETAILS	AE540
DETAILS	AE541
DETAILS	AE550
FINISH DETAILS	AE560
DOOR SCHEDULE	AE601
DOOR TYPES	AE602
WINDOW TYPES	AE603
WINDOW TYPES	AE604
WINDOW TYPES	AE605
WINDOW TYPES	AE606
WINDOW TYPES	AE607
FINISH LEGEND & ACCESSORY SCHEDULE	AE610
SIGNAGE	AE611

INTERIOR LAB

LAB SCHEDULES	IL001
LAB CASEWORK LEGEND & GENERAL NOTES	IL002
LAB CASEWORK ELEVATIONS	IL003
LAB CASEWORK ELEVATIONS	IL004
LAB CASEWORK ELEVATIONS	IL005
1ST FLOOR ENLARGED LAB PLANS	IL100
1ST FLOOR ENLARGED LAB PLANS	IL101
1ST FLOOR ENLARGED LAB PLANS	IL102
1ST FLOOR ENLARGED LAB PLANS	IL103
2ND FLOOR ENLARGED LAB PLANS	IL104
2ND FLOOR ENLARGED LAB PLANS	IL105
2ND FLOOR ENLARGED LAB PLANS	IL106
2ND FLOOR ENLARGED LAB PLANS	IL107
2ND FLOOR ENLARGED LAB PLANS	IL108
3RD FLOOR ENLARGED LAB PLANS	IL109
3RD FLOOR ENLARGED LAB PLANS	IL110
3RD FLOOR ENLARGED LAB PLANS	IL111
LAB DETAILS	IL500
LAB DETAILS	IL501
LAB DETAILS	IL502
LAB DETAILS	IL503
LAB DETAILS	IL504
LAB DETAILS	IL505
LAB DETAILS	IL506
LAB DETAILS	IL507
LAB DETAILS	IL508
LAB DETAILS	IL509
LAB DETAILS	IL510

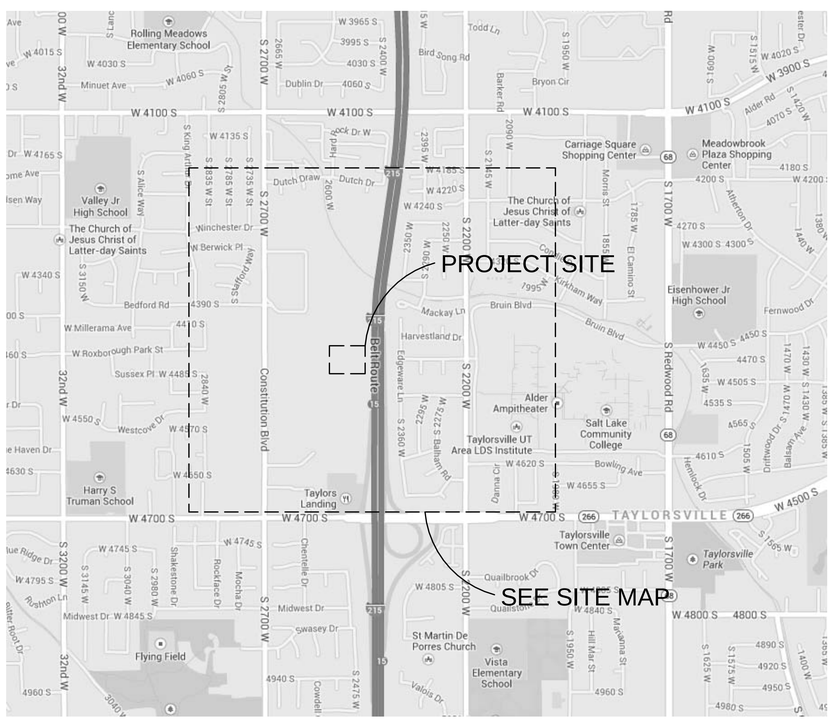

N

VICINITY MAP

SHEET INDEX VOLUME II

GENERAL

COVER SHEET	GI001
INDEX & VICINITY MAP	GI002

MECHANICAL

MECHANICAL LEGEND	ME000
GENERAL NOTES	ME001
MECHANICAL SITE PLAN	MS100
TUNNEL PLANS AND PROFILES	MS301
TUNNEL DETAILS	MS501
TUNNEL DETAILS	MS502
TUNNEL DETAILS	MS503
TUNNEL DETAILS	MS504
LEVEL 1 ZONING AND PRESSURIZATION PLAN	MH101
LEVEL 2 ZONING AND PRESSURIZATION PLAN	MH102
LEVEL 3 ZONING AND PRESSURIZATION PLAN	MH103
LEVEL 1 MECHANICAL PLAN AREA A	MH101A
LEVEL 1 MECHANICAL PLAN AREA B	MH101B
LEVEL 1 MECHANICAL PLAN AREA C	MH101C
LEVEL 2 MECHANICAL PLAN AREA A	MH102A
LEVEL 2 MECHANICAL PLAN AREA B	MH102B
LEVEL 2 MECHANICAL PLAN AREA C	MH102C
LEVEL 3 MECHANICAL PLAN AREA A	MH103A
LEVEL 3 MECHANICAL PLAN AREA B	MH103B
PENTHOUSE MECHANICAL PLAN	MH104
ROOF LEVEL MECHANICAL PLAN AREA A	MH105A
ROOF LEVEL MECHANICAL PLAN AREA B	MH105B
ROOF LEVEL MECHANICAL PLAN AREA C	MH105C
ROOF LEVEL MECHANICAL PLAN AREA D	MH105D
LEVEL 1 MECHANICAL PIPING PLAN AREA A	MP101A
LEVEL 1 MECHANICAL PIPING PLAN AREA B	MP101B
LEVEL 1 MECHANICAL PIPING PLAN AREA C	MP101C
LEVEL 2 MECHANICAL PIPING PLAN AREA A	MP102A
LEVEL 2 MECHANICAL PIPING PLAN AREA B	MP102B
LEVEL 2 MECHANICAL PIPING PLAN AREA C	MP102C
LEVEL 3 MECHANICAL PIPING PLAN AREA A	MP103A
LEVEL 3 MECHANICAL PIPING PLAN AREA B	MP103B
PENTHOUSE MECHANICAL PIPING PLAN	MP104
PIPING SHAFT PLAN AND ISOMETRIC	ME301
MECHANICAL SECTIONS	ME302
MECHANICAL SECTIONS	ME303
MECHANICAL SECTIONS	ME304
LARGE SCALE PENTHOUSE MECHANICAL PLAN AREA A	ME401
LARGE SCALE PENTHOUSE MECHANICAL PLAN AREA B	ME402
LARGE SCALE PENTHOUSE MECHANICAL PLAN AREA C	ME403
LARGE SCALE FIRST LEVEL MECHANICAL ROOM PLAN AREA D	ME404
MECHANICAL DETAILS	ME501
MECHANICAL DETAILS	ME502
MECHANICAL DETAILS	ME503
MECHANICAL DETAILS	ME504
AIR HANDLES AH-1 & AH-2	ME505
AIR HANDLERS AH-3 & AH-4	ME506
FILTER BANK DETAIL	ME507
MECHANICAL SCHEDULES	ME601
MECHANICAL SCHEDULES	ME602
MECHANICAL SCHEDULES	ME603
MECHANICAL SCHEDULES	ME604
MECHANICAL SCHEDULES	ME605
MECHANICAL SCHEDULES	ME606
MECHANICAL SCHEDULES	ME607
MECHANICAL SCHEDULES	ME608
MECHANICAL SCHEDULES	ME609
MECHANICAL SCHEDULES	ME610
MECHANICAL SCHEDULES	ME611
MECHANICAL SCHEDULES	ME612
MECHANICAL SCHEDULES	ME613
MECHANICAL SCHEMATIC	ME701
MECHANICAL SCHEMATIC	ME702
MECHANICAL SCHEMATIC	ME703
MECHANICAL SCHEMATIC	ME704
MECHANICAL SCHEMATIC	ME705
MECHANICAL SCHEMATIC	ME706
MECHANICAL SCHEMATIC	ME707

PLUMBING

LEVEL 1 PLUMBING PLAN AREA A	PE101A
LEVEL 1 PLUMBING PLAN AREA B	PE101B
LEVEL 1 PLUMBING PLAN AREA C	PE101C
LEVEL 2 PLUMBING PLAN AREA A	PE102A
LEVEL 2 PLUMBING PLAN AREA B	PE102B
LEVEL 2 PLUMBING PLAN AREA C	PE102C
LEVEL 3 PLUMBING PLAN AREA A	PE103A
LEVEL 3 PLUMBING PLAN AREA B	PE103B
PENTHOUSE PLUMBING PLAN AREA A	PE104A
PENTHOUSE PLUMBING PLAN AREA B	PE104B
LEVEL 1 WASTE AND VENT PLAN AREA A	PW101A
LEVEL 1 WASTE AND VENT PLAN AREA B	PW101B
LEVEL 1 WASTE AND VENT PLAN AREA C	PW101C
LEVEL 2 WASTE AND VENT PLAN AREA A	PW102A
LEVEL 2 WASTE AND VENT PLAN AREA B	PW102B
LEVEL 2 WASTE AND VENT PLAN AREA C	PW102C
LEVEL 3 WASTE AND VENT PLAN AREA A	PW103A
LEVEL 3 WASTE AND VENT PLAN AREA B	PW103B
ROOF LEVEL PLUMBING PLAN AREA A	PW105A
ROOF LEVEL PLUMBING PLAN AREA B	PW105B
ROOF LEVEL PLUMBING PLAN AREA C	PW105C
ROOF LEVEL PLUMBING PLAN AREA D	PW105D
MECHANICAL ROOM PLUMBING PLAN	PE401
LARGE SCALE PLUMBING PLANS"	PE402
PLUMBING DETAILS	PE501
PLUMBING DETAILS	PE502
PLUMBING DETAILS	PE503
PLUMBING SCHEDULES	PE601
PLUMBING SCHEDULES	PE602
SCHEMATIC	PE701

ELECTRICAL

SHEET INDEX, ABBREVIATIONS, AND GENERAL NOTES	EE001
SYMBOLS LEGEND	EE002
DETAILS	EE501
DETAILS	EE502
DETAILS	EE503
DETAILS	EE504
TELECOMM RACEWAY RISER DIAGRAM	EE601
GROUNDING RISER DIAGRAM	EE602
TYPICAL MOUNTING HEIGHT DETAILS	EE701
OVERALL SITE ELECTRICAL PLAN	ES101
SITE ELECTRICAL PLAN	ES102
TUNNEL LEVEL POWER PLAN	EP100
FIRST LEVEL POWER PLAN - AREA A	EP101a
FIRST LEVEL POWER PLAN - AREA B	EP101b
FIRST LEVEL POWER PLAN - AREA C	EP101c
FIRST LEVEL POWER PLAN - AREA D	EP101d
SECOND LEVEL POWER PLAN - AREA A	EP102a
SECOND LEVEL POWER PLAN - AREA B	EP102b
THIRD LEVEL POWER PLAN - AREA A	EP103a
THIRD LEVEL POWER PLAN - AREA B	EP103b
PENTHOUSE LEVEL POWER PLAN	EP104
ROOF POWER PLAN	EP105
ENLARGED POWER PLANS	EP401
ENLARGED LAB POWER PLANS	EP402
POWER ONE-LINE DIAGRAM - MODULE 2 (a)	EP601
POWER ONE-LINE DIAGRAM - MODULE 2 (b)	EP602
POWER ONE-LINE DIAGRAM - MODULE 2 (c)	EP603
POWER ONE-LINE DIAGRAM - MODULE 2 (d)	EP604
POWER ONE-LINE DIAGRAM - MODULE 2 (e)	EP605
EXISTING POWER ONE-LINE DIAGRAM - MODULE 1 (a)	EP606
EXISTING POWER ONE-LINE DIAGRAM - MODULE 1 (b)	EP607
EXISTING POWER ONE-LINE DIAGRAM - MODULE 1 (c)	EP608
EXISTING POWER ONE-LINE DIAGRAM - MODULE 1 (d)	EP609
LAB EQUIPMENT SCHEDULE	EP610
MECHANICAL EQUIPMENT SCHEDULE - MOD 2 BLDG (a)	EP611
MECHANICAL EQUIPMENT SCHEDULE - MOD 2 BLDG (b)	EP612
MECHANICAL EQUIPMENT SCHEDULE - MOD 1 ADDITION	EP613
PANEL SCHEDULES	EP614
PANEL SCHEDULES	EP615
PANEL SCHEDULES	EP616
PANEL SCHEDULES	EP617
PANEL SCHEDULES	EP618
PANEL SCHEDULES	EP619
PANEL SCHEDULES	EP620
PANEL SCHEDULES	EP621
PANEL SCHEDULES	EP622
PANEL SCHEDULES	EP623
PANEL SCHEDULES	EP624
PANEL SCHEDULES	EP625
PANEL SCHEDULES	EP626
PANEL SCHEDULES	EP627
PANEL SCHEDULES	EP628
PANEL SCHEDULES	EP629
TUNNEL LEVEL LIGHTING PLAN	EL100
FIRST LEVEL LIGHTING PLAN - AREA A	EL101a
FIRST LEVEL LIGHTING PLAN - AREA B	EL101b
FIRST LEVEL LIGHTING PLAN - AREA C	EL101c
FIRST LEVEL LIGHTING PLAN - AREA D	EL101d
SECOND LEVEL LIGHTING PLAN - AREA A	EL102a
SECOND LEVEL LIGHTING PLAN - AREA B	EL102b
THIRD LEVEL LIGHTING PLAN - AREA A	EL103a
THIRD LEVEL LIGHTING PLAN - AREA B	EL103b
PENTHOUSE LEVEL LIGHTING PLAN	EL104
LIGHTING DETAILS AND DIAGRAMS	EL501
LIGHTING DETAILS AND DIAGRAMS	EL502
LIGHTING CONTROL DIAGRAMS	EL503
LIGHTING CONTROL DIAGRAMS	EL504
RELAY PANEL SCHEDULES	EL505
LIGHTING FIXTURE SCHEDULE	EL601
LIGHTING FIXTURE SCHEDULE (CONT.)	EL602
FIRST LEVEL AUXILIARY PLAN - AREA A	EY101a
FIRST LEVEL AUXILIARY PLAN - AREA B	EY101b
FIRST LEVEL AUXILIARY PLAN - AREA C	EY101c
SECOND LEVEL AUXILIARY PLAN - AREA A	EY102a
SECOND LEVEL AUXILIARY PLAN - AREA B	EY102b
THIRD LEVEL AUXILIARY PLAN - AREA A	EY103a
THIRD LEVEL AUXILIARY PLAN - AREA B	EY103b
PENTHOUSE LEVEL AUXILIARY PLAN	EY104
AUXILIARY DETAILS	EY501
AUXILIARY DIAGRAMS	EY601
FIRST LEVEL PLAN AUDIO VISUAL ROUGH-IN PLAN - AREA A	EJ101a
FIRST LEVEL PLAN AUDIO VISUAL ROUGH-IN PLAN - AREA B	EJ101b
FIRST LEVEL PLAN AUDIO VISUAL ROUGH-IN PLAN - AREA C	EJ101c
SECOND LEVEL AUDIO VISUAL ROUGH-IN PLAN - AREA A	EJ102a
SECOND LEVEL AUDIO VISUAL ROUGH-IN PLAN - AREA B	EJ102b
THIRD LEVEL AUDIO VISUAL ROUGH-IN PLAN - AREA B	EJ103b
AUDIO VISUAL ROUGH-IN SECTION DETAILS	EJ301
AUDIO VISUAL ROUGH-IN SECTION DETAILS	EJ302
AUDIO VISUAL DETAILS	EJ501
AUDIO VISUAL SCHEDULES	EJ601
AV ROUGH IN RISER DIAGRAMS	EJ602
LIGHTNING PROTECTION PLAN	EK101
LIGHTNING PROTECTION DETAILS	EK501

FIRE PROTECTION

FIRST LEVEL FIRE ALARM PLAN - AREA A	FA101a
FIRST LEVEL FIRE ALARM PLAN - AREA B	FA101b
FIRST LEVEL FIRE ALARM PLAN - AREA C	FA101c
FIRST LEVEL FIRE ALARM PLAN - AREA D	FA101d
SECOND LEVEL FIRE ALARM PLAN - AREA A	FA102a
SECOND LEVEL FIRE ALARM PLAN - AREA B	FA102b
THIRD LEVEL FIRE ALARM PLAN - AREA A	FA103a
THIRD LEVEL FIRE ALARM PLAN - AREA B	FA103b
PENTHOUSE LEVEL FIRE ALARM PLAN	FA104
FIRE ALARM RISER	FA601

AUDIO-VIDEO

CRSA

649 E. South Temple
Salt Lake City, UT 84102
801.355.5915

MWL

11798 N. Lakeridge Pkwy.
Ashland, VA 23005
804-228-7473

State of Utah
Department of Administrative Services
Division of Facilities Construction & Management
4110 State Office Building
Salt Lake City, Utah 84114
Phone: (801) 538 - 3018
Fax: (801) 538 - 3267

DIVISION OF FACILITIES CONSTRUCTION AND MANAGEMENT
REVIEWED FOR CODE COMPLIANCE
SIGNATURE: Ernie Cate
DATE: 08-05-2014

STATE OF UTAH #134096 MEHRDAD SAMIE LICENSED ARCHITECT
04-28-2014
ARCHITECT-ENGINEER STAMP

Unified State Laboratory Module 2

4451 South 2700 West, Taylorsville, UT 84118

DFCM #: 13020300

Project #: B13-024

DATE:	ISSUE TYPE:
APRIL 21, 2014	BID SET
CHECKED BY	J. NIELSEN
DRAWN BY	F. PITORE

INDEX & VICINITY MAP

GI002

VOLUME 1

C:\Users\fernando\Documents_A_13024_Modli_2013_fernando.rvt
7/14/2014 11:33:29 PM

NONSTRUCTURAL COMPONENT CHECKLIST

ITEM DESCRIPTION	NOT REQUIRED	ON CONST. DOCUMENTS	DEFERRED SUBMITTAL	Comments
ARCHITECTURAL COMPONENTS:				
Interior Nonstructural Walls & Partitions		X		
Candtilever Elements (i.e. parapets, etc.)		X		
Exterior Nonstructural Wall Elements			X	Precast cladding system/ curtain wall system
Veneer		X		
Penthouse	X			
Ceilings (i.e. suspended grid or hard-lid)		X		See Specs
Cabinets (i.e. storage cabinets, equip, etc.)		X		
Access Floors	X			
Storage Racks	X			
Appendages & Ornamentations	X			
Signs & Billboards	X			
Others:		X		See Specs
Others:				
MEP COMPONENTS:				
Fire Sprinklers			X	
Mechanical Equipments (i.e. HVAC, fans, air handlers, boilers, furnaces, tanks, chillers, water heaters, heat exchangers, evaporates, engines, turbines, pumps, compressors, MFR equipments, etc.)			X	Mechanical Submittal
Electrical Equipments (i.e. generators, batteries inverters, transformers, MCC, panel boards, switch gear, cabinets, etc.)			X	Electrical Submittal
Elevator & Escalator Components			X	Elevator Submittal
Communication Equipments, Computers, Instrumentation, and Controls	X			
Roof - mounted Chimneys, Stacks, Cooling & Electrical Towers	X			
Lighting Fixtures		X		
Vibration Isolated Components	X			
Piping & Conduit System			X	Mechanical & Electrical Submittal
Ductwork (including in-line components)			X	Mechanical Submittal
Conveyors	X			
Cable Trays			X	Electrical Submittal
Others:			X	Mechanical Submittal
Others:				

NOTES:

1. Deferred submittals for seismic restraint of nonstructural components must be submitted to the DFCM Building Official a minimum of two weeks prior to the planned installation in order to allow for plan review and forwarding to inspectors. In the event that the submittal is deficient additional time may become necessary.
2. If seismic restraints of non-structural components are installed prior to receiving DFCM approval they shall not be covered or concealed until receiving both plan review and inspection approval. Further, installers are proceeding at their own risk until plan review and inspection approval occurs.
3. The requirements for seismic restraint of nonstructural components cannot be satisfied by a general reference to Design Manuals. The design professional may utilize these manuals as a basis of their design, but must provide all supporting documentation to ensure that the design conforms to the requirements of ASCE 7-05, Chapter 13.
4. Submittals must include details of the proposed seismic restraint of nonstructural components. These details must show specific information relating to the materials, type, size, and locations of anchorages; materials used for bracing; attachment requirements of bracing to structure and component; and locations of transverse and longitudinal sway bracing and rod stiffeners. Submittals may also require structural calculations, engineering reports, test data, and/or specifications to ensure code compliance.

DEFERRED SUBMITTALS

SUBMITTAL DEADLINE	CONTRACTOR TO PROVIDE DEFERRED SUBMITTALS FOR THE FOLLOWING ITEMS
	1. FIRE SPRINKLER SYSTEM PLANS - Complete submittal form From Utah State Fire Marshal's website http://publicsafety. utah.gov/firemarshal
	2. FIRE ALARM PLANS - Compllete submittal form From Utah State Fire Marshal's website http://publicsafety.utah.gov/firemarshal
	3. SEE THE NONSTRUCTURAL COMPONENT CHECKLIST ON THIS SHEET FOR ADDITIONAL DEFERRED MEP COMPONENTS
	4. SEE NOTE ON THE NONSTRUCTURAL COMPONENT CHECKLIST ON THIS SHEET FOR ADDITIONAL SUBMITTAL REQUIREMENTS
	5. OPEN WEB STEEL JOISTS.
	6. CURTAIN WALL.
	7. GLASS GUARDS
	8. BRB SUBMITTAL
	9. METAL STAIRS
	10. DESIGN FRAME TO SUPPORT MECHANICAL PIPING IN THE TUNNEL

REQUIREMENTS FOR OCCUPANCY

1. A CODE INSPECTION REPORT RECOMMENDING THAT A CERTIFICATE OF OCCUPANCY BE ISSUED.
2. FINAL REPORT FROM THE SPECIAL INSPECTION AGENCY.
3. CERTIFICATE OF FIRE CLEARANCE FROM THE STATE FIRE MARSHALL.
4. FINAL APPROVAL FROM THE STATE ELEVATOR INSPECTOR, IF APPLICABLE.
5. FINAL APPROVAL FROM THE STATE BOILER INSPECTOR, IF APPLICABLE.
6. REPORT OF THE DISINFECTION OF THE POTABLE WATER SYSTEM. IPC 610.
7. A CERTIFICATE OF COMPLIANCE FROM THE APPROVED FABRICATOR, IF A APPLICABLE. IBC 1704.2.2
8. A STAMPED AND SIGNED FINAL REPORT FORM THE STRUCTURAL ENGINEER WHEN STRUCTURAL OBSERVATION IS REQUIRED BY IBC 1710.
9. FINAL REPORT FROM THE SPECIAL INSPECTOR AND THE MECHANICAL ENGINEER WHEN SMOKE CONTROL IS REQUIRED. THE REPORTS MUST COMPLY WITH IBC 909.18.8.3.
10. THE NFRC CERTIFICATE TO SHOW COMPLIANCE WITH THE FENESTRATION REQUIREMENTS OF THE INTERNATIONAL ENERGY.

DFCM GUIDELINES FOR SEISMIC RESTRAINT OF NONSTRUCTURAL COMPONENTS

1. General Comments:

a) These guidelines shall apply to all nonstructural components installed in newly constructed buildings, building additions, and all new or replaced components in existing buildings. Nonstructural components consist of architectural, mechanical and electrical components that are permanently attached to the primary structure.

b) When a change in occupancy occurs that causes an existing building to be re□classified to a higher Occupancy Category per IBC Table 1604.5, all existing nonstructural components shall be confirmed to meet the seismic restraint requirements of Chapter 13 in ASCE 7.

c) These guidelines define the minimum submittal requirements to obtain DFCM approval for seismic restraint of nonstructural components. The guidelines noted herein shall not cancel or set aside more conservative requirements specified by the design professional in responsible charge.

d) All references made to the IBC or ASCE 7 reference the 2006 and 2005 editions, respectively.

2. Checklist Requirements:

a) All DFCM projects shall have the "**Nonstructural Component Checklist**" clearly shown on the front of the construction plans. Click here to download a PDF of this checklist.

b) Each item within the checklists shall have the appropriate box checked and comments shall be provided noting the particular component(s) that require seismic restraint. See the example checklists provided at the end of this handout.

c) The "Not Required" box should only be checked if the component is exempt from requiring seismic restraint by Section 13.1.4 of ASCE 7, or if the component in question will not be provided as part of the project.

d) If the "Deferred Submittal" box is checked the additional requirements of Section 6 included in this handout must be met.

3. Submittal Requirements:

a) The seismic restraint requirements for nonstructural components may be provided with the original construction documents submitted to DFCM or may be submitted later as a deferred submittal. Whether provided with the original plans or later, the requirements of this section must be met.

b) Seismic restraint submittals shall include construction documents meeting the requirements of Section 4 of this handout as well as supporting design information discussed in Section 5 of this handout.

4. Construction Documents:

a) The construction documents must include seismic restraint details providing specific information relating to the materials, type, size, and locations of anchorages; materials used for bracing; attachment requirements of bracing to structure and component; and locations of transverse and longitudinal sway bracing and rod stiffeners.

b) The construction documents must note the special inspection and testing requirements for the seismic restraint of nonstructural components per Section 13.2.7 of ASCE 7.

c) DFCM will accept products that have been tested and listed under the ICC Evaluation Service Program, as long as they are installed in accordance with the provisions and limitations of the ICC Listing Report.

d) The requirements for anchorage/bracing of nonstructural components cannot be satisfied by a general reference to Design Manuals. Design professional may utilize these manuals as a basis of their design, but must provide all supporting documentation to ensure that the design conforms to the requirements of the 2006 IBC.

e) Rod hangers shall not be used as seismic supports unless the length of the hanger from the supporting structure is 12 in. or less. Rod hangers shall not be constructed in a manner that subjects the rod to bending moments.

5. Seismic Restraint Design Requirements:

a) Per IBC 1613.1, the seismic restraint of nonstructural components shall meet the requirements of ASCE 7. If the component in question is exempted by Section 13.1.4 of ASCE 7, a submittal noting the seismic restraint of that particular component is not required.

b) The seismic restraint design must meet the requirements listed in Table 13.2□1 of ASCE 7. These requirements may be met by providing either a project□specific design prepared by a registered design professional, or a manufacturer's certification that the component is seismically qualified.

c) A certificate of seismic qualification by the manufacturer must be accompanied by one of the following items:

- An engineered analysis conforming to the requirements of Chapter 13 of ASCE 7.

- Testing by a nationally recognized testing standard procedure such as ICC□ES AC 156. The substantiated seismic design capacities shall exceed the seismic demands determined by Section 13.3 of ASCE 7.

- Experience data conforming to a nationally recognized procedure. The substantiated seismic design capacities shall exceed the seismic demands determined by Section 13.3 of ASCE 7.

d) The following seismic restraint publications shall be considered "Accepted Engineering Practice":

- Seismic Restraint Manual, Guidelines for Mechanical Systems (3rd Edition, published by SMACNA)

- Guidelines and details that have been evaluated and reported under the International Code Council Evaluation Service Program (ICC□ES).

- Seismic restraint manuals, guidelines and details that have been approved by the California Office of Statewide Health Planning and Development (OSHPD) under their pre-approval program for seismic restraint systems.

6. Deferred Submittals:

a) Deferred submittals of seismic restraint of nonstructural components must be submitted to the DFCM Building Official a minimum of two weeks prior to the planned installation in order to allow for plan review and forwarding to inspectors. In the event that the submittal is deficient additional time may become necessary.

b) Deferred submittals shall be clearly noted on the construction plans as required by IBC 106.3.4.2. Prior to submitting to the DFCM Building Official, the submittal must be reviewed by the design professional in responsible charge and approved for general conformance with the design of the building. Please note on the plans that no deferred submittal element shall be installed until DFCM approval has been received.

c) If seismic restraints of nonstructural components are installed prior to receiving DFCM approval they shall not be covered or concealed until plan review and inspection approval. Further, installers are proceeding at their own risk until plan review and inspection approval occurs.

[F] TABLE 307.1(1)

MAXIMUM ALLOWABLE QUANTITY PER CONTROL AREA OF HAZARDOUS MATERIALS POSING A PHYSICAL HAZARD[a, j, m, n, pD]

MATERIAL	CLASS	GROUP WHEN THE MAXIMUM ALLOWABLE QUANTITY IS EXCEEDED	STORAGE**b** Solid pounds (cubic feet)	STORAGE**b** Liquid gallons (pounds)	STORAGE**b** Gas (cubic feet at NTP)	USE-CLOSED SYSTEMS**b** Solid pounds (cubic feet)	USE-CLOSED SYSTEMS**b** Liquid gallons (pounds)	USE-CLOSED SYSTEMS**b** Gas (cubic feet at NTP)	USE-OPEN SYSTEMS**b** Solid pounds (cubic feet)	USE-OPEN SYSTEMS**b** Liquid gallons (pounds)
Combustible dust	N/A	H-2	Note q	N/A	N/A	Note q	N/A	N/A	Note q	N/A
Combustible liquidc,i	II IIIA IIIB	H-2 or H-3 H-2 or H-3 N/A	N/A	120d, e 330d, e 13,200e, f	N/A	N/A	120d 330d 13,200f	N/A	N/A	30d 80d 3,300f
Combustible fiber	Loose Baledo	H-3	(100) (1,000)	N/A	N/A	(100) (1,000)	N/A	N/A	(20) (200)	N/A
Consumer fireworks	1.4G	H-3	125d, e, l	N/A	N/A	N/A	N/A	N/A	N/A	N/A
Cryogenics, flammable	N/A	H-2	N/A	45d	N/A	N/A	45d	N/A	N/A	10d
Cryogenics, inert	N/A	N/A	N/A	N/A	NL	N/A	N/A	NL	N/A	N/A
Cryogenics, oxidizing `	N/A	H-3	N/A	45d	N/A	N/A	45d	N/A	N/A	10d
Explosives	Division 1.1	H-1	1e, g	(1)e, g	N/A	0.25g	(0.25)g	N/A	0.25g	(0.25)g
	Division 1.2	H-1	1e, g	(1)e, g	N/A	0.25g	(0.25)g	N/A	0.25g	(0.25)g
	Division 1.3	H-1 or H-2	5e, g	(5)e, g	N/A	1g	(1)g	N/A	1g	(1)g
	Division 1.4	H-3	50e, g	(50)e, g	N/A	50g	(50)g	N/A	N/A	N/A
	Division 1.4G	H-3	125d, e, l	N/A	N/A	N/A	N/A	N/A	N/A	N/A
	Division 1.5	H-1	1e, g	(1)e, g	N/A	0.25g	(0.25)g	N/A	0.25g	(0.25)g
	Division 1.6	H-1	1d, e, g	N/A	N/A	N/A	N/A	N/A	N/A	N/A
Flammable gas	Gaseous Liquefied	H-2	N/A	N/A (150)d,e	1,000d,e N/A	N/A	N/A (150)d,e	1,000d,e N/A	N/A	N/A
Flammable liquidc	1A 1B and 1C	H-2 or H-3	N/A	30d,e 120d,e	N/A	N/A	30d 120d	N/A	N/A	10d 30d
Flammable liquid, combination (1A, 1B, 1C)	N/A	H-2 or H-3	N/A	120d, e, h	N/A	N/A	120d, h	N/A	N/A	30d, h

[F] TABLE 307.1(1) - (continued)

MAXIMUM ALLOWABLE QUANTITY PER CONTROL AREA OF HAZARDOUS MATERIALS POSING A PHYSICAL HAZARD[a, j, m, n, pD]

MATERIAL	CLASS	GROUP WHEN THE MAXIMUM ALLOWABLE QUANTITY IS EXCEEDED	STORAGE[b] Solid pounds (cubic feet)	STORAGE[b] Liquid gallons (pounds)	STORAGE[b] Gas (cubic feet at NTP)	USE-CLOSED SYSTEMS[b] Solid pounds (cubic feet)	USE-CLOSED SYSTEMS[b] Liquid gallons (pounds)	USE-CLOSED SYSTEMS[b] Gas (cubic feet at NTP)	USE-OPEN SYSTEMS[b] Solid pounds (cubic feet)	USE-OPEN SYSTEMS[b] Liquid gallons (pounds)
Flammable solid	N/A	H-3	125[d, e]	N/A	N/A	125[d]	N/A	N/A	25[d]	N/A
Inert gas	Gaseous Liquefied	N/A N/A	N/A N/A	N/A N/A	NL NL	N/A N/A	N/A N/A	NL NL	N/A N/A	N/A N/A
Organic peroxide	UD	H-1	1[e, g]	(1)[e, g]	N/A	0.25[g]	(0.25)[g]	N/A	0.25[g]	(0.25)[g]
	I	H-2	5[d, e]	(5)[d, e]	N/A	1[d]	(1)[d]	N/A	1[d]	(1)[d]
	II	H-3	50[d, e]	(50)[d, e]	N/A	50[d]	(50)[d]	N/A	10[d]	(10)[d]
	III	H-3	125[d, e]	(125)[d, e]	N/A	125[d]	(125)[d]	N/A	25[d]	(25)[d]
	IV	N/A	NL	NL	N/A	NL	NL	N/A	NL	NL
	V	N/A	NL	NL	N/A	NL	NL	N/A	NL	NL
Oxidizer	4	H-1	1[e, g]	(1)[e, g]	N/A	0.25[g]	(0.25)[g]	N/A	0.25[g]	(0.25)[g]
	3[k]	H-2 or H-3	10[d, e]	(10)[d, e]	N/A	2[d]	(2)[d]	N/A	2[d]	(2)[d]
	2	H-3	250[d, e]	(250)[d, e]	N/A	250[d]	(250)[d]	N/A	50[d]	(50)[d]
	1	N/A	4,000[e, f]	(4,000)[e, f]	N/A	4,000[f]	(4,000)[f]	N/A	1,000[f]	(1,000)[f]
Oxidizing gas	Gaseous Liquefied	H-3	N/A N/A	N/A (150)[d, e]	1,500[d, e] N/A	N/A N/A	N/A (150)[d,e]	1,500[d,e] N/A	N/A N/A	N/A N/A
Pyrophoric material	N/A	H-2	4[e, g]	(4)[e, g]	50[e, g]	1[g]	(1)[g]	10[g]	0	0
Unstable (reactive)	4	H-1	1[e, g]	(1)[e, g]	10[g]	0.25[g]	(0.25)[g]	2[e, g]	0.25[g]	(0.25)[g]
	3	H-1 or H-2	5[d, e]	(5)[d, e]	50[d, e]	1[d]	(1)[d]	10[d, e]	1[d]	(1)[d]
	2	H-3	50[d, e]	(50)[d, e]	250[d, e]	50[d]	(50)[d]	250[d, e]	10[d]	(10)[d]
	1	N/A	NL	NL	NL	NL	NL	NL	NL	NL
Water reactive	3	H-2	5[d, e]	(5)[d, e]	N/A	5[d]	(5)[d]	N/A	1[d]	(1)[d]
	2	H-3	50[d, e]	(50)[d, e]	N/A	50[d]	(50)[d]	N/A	10[d]	(10)[d]
	1	N/A	NL	NL	N/A	NL	NL	N/A	NL	NL

[F] TABLE 307.1(2)

MAXIMUM ALLOWABLE QUANTITY PER CONTROL AREA OF HAZARDOUS MATERIAL POSING A HEALTH HAZARD[a, b, c, i]

MATERIAL	STORAGE[d] Solid pounds (cubic feet)	STORAGE[d] Liquid gallons (pounds)[e, f]	STORAGE[d] Gas (cubic feet at NTP)[e]	USE-CLOSED SYSTEMS[d] Solid pounds[e]	USE-CLOSED SYSTEMS[d] Liquid gallons (pounds)[e]	USE-CLOSED SYSTEMS[d] Gas (cubic feet at NTP)[e]	USE-OPEN SYSTEMS[d] Solid pounds[e]	USE-OPEN SYSTEMS[d] Liquid gallons (pounds)[e]
Corrosive	5,000	500	Gaseous 810[f] Liquefied (150)[h]	5,000	500	Gaseous 810[f] Liquefied (150)[h]	1,000	100
Highly toxic	10	(10)[h]	Gaseous 20[g] Liquefied (4)[g,h]	10	(10)[i]	Gaseous 20[g] Liquefied (4)[g,h]	3	(3)[i]
Toxic	500	(500)[h]	Gaseous 810[f] Liquefied (150)[f,h]	500	(500)[i]	Gaseous 810[f] Liquefied (150)[f,h]	125	(125)

CODE ANALYSIS

APPLICABLE CODES

	Year		Year
International Building Code	2012	National Electrical Code	2011
International Mechanical Code	2012	Uniform Code for Building Conservation	
International Plumbing Code	2012	ADA Accessibility Guildelines	2010
International Fire Code	2012		
International Energy Conservation Code			

A. Occupancy and Group: B S1 AS ACCESSORY USE

Change in Use: Yes ______ No X Mixed Occupancy: Yes ______ No X

Special Use and Occupancy (e.g. High Rise, Covered Mall): NOT APPLICABLE

B. Seismic Design Category: D Design Wind Speed: 115 mph

C. Type of Construction (circle one):

I A   I B   II A   (II B)   III A   III B   IV HT   V A   V B

D. Fire Resistance Rating Requirements for the Exterior Walls based on the fire separation distance (in hours):

North: 0 South: 0 East: 0 West: 0

E. Mixed Occupancies: ______ Nonseparated Uses: √

F: Sprinklers:

Required: ______ Provided: √ Type of Sprinkler System: WET

G: Number of Stories: 3 Building Height: 68' - 6"

H: Actual Area per Floor (square feet): L1=32,980 L2=31,922 L3=18,032 Penthouse=11,890 Tunnel=2,350 Total=97,174

I: Tabular Area: 23,000

J: Area Modifications: $A_a = 23{,}000 \left[\frac{23{,}000}{.75}\right] + \left[23{,}000 \times 2\right]$

a) 86,250 $I_f = .75 \left[\frac{944}{944} - 0.25\right] \frac{30}{30}$

b) Sum of the Ratio Calculations for Mixed Occupancies:

$\frac{\text{Actual Area}}{\text{Allowable Area}} \leq 1$

c) Total Allowable Area for:

1) One Story: 86,250
2) Two Story: $A_a(2)$ 172,500
3) Three Story: $A_a(3)$ 258,750

d) Unlimited Area Building: Yes ______ No X Code Section: TABLE 503

K. Fire Resistance Rating Requirements for Building Elements (hours).

Element	Hours	Assembly Listing	Element	Hours	Assembly Listing
Exterior Bearing Walls	0	Table 720.1(2)	Floors - Ceiling Floors	0	UL N782
Interior Bearing Walls	0	N/A	Roofs - Ceiling Roofs	0	UL S721
Exterior Non-Bearing Walls	0		Exterior Doors and Windows	0	
Structural Frame	0	UL Y715	Shaft Enclosures	1&2	UL 415
Partitions - Permanent	0		Fire Walls	N/A	
Fire Barriers	1	UL 419	Fire Partitions	N/A	
			Smoke Partitions		

L. Design Occupant Load: 963

Exit Width Required: 120.3 Stairs Exit Width Required: 80.2 Other
Exit Width Provided: 189.0 Stairs Exit Width Provided: 150 Other

M. Minimum Number of Required Plumbing Facilities:

a) Water Closets - Required (m) 10 (f) 11 Provided (m) 14 (f) 14
b) Lavatories - Required (m) 7 (f) 7 Provided (m) 14 (f) 14
c) Bath Tubs or Showers: 0
d) Drinking Fountains: 10 Service Sinks: 3

FOOTNOTES:

1) In case of conflict with the U.S. Department of Justice Federal Registers Parts I through V - ADA Guidelines and specific reference to the International Building Code Accessibility Chapters, the more restrictive requirement shall govern.

2) Additional Code Information shall be provided at the discretion of the Building Official for Complex Buildings. Including, but not limited to:
   a) High Rise Requirements.
   b) Atriums.
   c) Performance Based Criteria.
   d) Means or Egress Analysis.
   e) Fire Assembly Locator Sheet.
   f) Exterior and Interior Accessibility Route.
   g) Fire Stopping, Including Tested Design Number.

CRSA
649 E. South Temple
Salt Lake City, UT 84102
801.355.5915

MWL
11798 N. Lakeridge Pkwy.
Ashland, VA 23005
804-228-7473

State of Utah
Department of Administrative Services
Division of Facilities Construction & Management
DFCM
4110 State Office Building
Salt Lake City, Utah 84114
Phone: (801) 538 - 3018
Fax: (801) 538 - 3267

DIVISION OF FACILITIES CONSTRUCTION AND MANAGEMENT
REVIEWED FOR CODE COMPLIANCE
SIGNATURE:
DATE: 08-05-2014

STATE OF UTAH
#134098
MEHRDAD SAMIE
LICENSED ARCHITECT
04.28.2014
ARCHITECT-ENGINEER STAMP

Unified State Laboratory Module 2

4451 South 2700 West, Taylorsville, UT 84118

DFCM #: 13020300

Project #: B13-024

DATE:	ISSUE TYPE:
APRIL 21, 2014	BID SET
CHECKED BY	J. NIELSEN
DRAWN BY	F. PITORE

CODE SUMMARY

GI003

VOLUME 1

C:\Users\fernando\Documents_A_13024_ModII_2013_fernando.rvt
7/14/2014 1:13:39 PM

APPROVED FABRICATOR LIST FOR 2014

All approvals are site specific. Additional shop locations must be approved individually.
The Approved Fabricator list will be updated on the first of each month.
Companies which have not provided the updated renewal information will be removed from the list.
Companies with expiration dates falling within the month are considered removed upon the expiration date.

STEEL BUILDINGS, MEDIUM AND HIGH STRENGTH STEEL CATEGORY

Company Name & Address	Contact Information	Certification	Expiration Date
AMFAB STEEL SPECIALTIES 250 North 700 West North Salt Lake, UT 84054	Allyn Daines 801 298-2900 al@amfabsteel.com	AISC	September 30, 2014
B & B Steel Fabrication 1785 East Washington Dam Rd. Washington, UT 84780	Peter Bulloch 435-627-0615 Fax 435-627-0621 pete@bbsteelfab.com	AISI CCDDS-BD	April 30, 2014 July 15, 2013
BC Steel Buildings, INC 9900 N.W. 10th Street Oklahoma City, OK 73127	Jon Wensman 800-227-8335 405-324-5100 Fax 405-324-5093 jwensman@bcsteel.com	IAS	September 9, 2014
BlueScope Buildings North America, Inc 7440 Doe Avenue Vasalia Ca. 93279	Craig True 559-651-5325 Cell: 559-331-4696 craig.true@BlueScopeBuildingsna.com	IAS	April 26, 2014
BLUE STAR STEEL 3692 West 500 South Salt Lake City, UT 84104	801 908-8302 Jeff Wright jeff@bluestarsteel.com Dante Fratto dante@bluestarsteel.com	AISC	October 31, 2014
CBC STEEL BUILDINGS (A NUCOR COMPANY) 1700 East Louise Avenue Lathrop, CA 95330	David Burila 209-647-4108 dburila@cbcsteelbuildings.com	CCDDS-BD IAS CWB	May 19, 2014 March 23, 2014 September 28, 2014
CO Building Systems Inc. 320 West 100 North Ephraim, UT 84642	Brooks Walk 435-283-4040 Fax 435-283-8326 brooks10@cobuildings.net	CCDDS-BD	May 19, 2014
Construction Steel Inc. 2555 North Bull Dog Rd Cedar City, Utah 84721	Tracy W. Henrie 435-586-6380 FAX 435-586-4950 whenrie@constructionsteelinc.com	AISC CCDDS-BD	May 31, 2014 September 13, 2014
DUCWORDS, INC 1725 North 600 West Logan, UT 84321	Jeremy Jenkins 435-792-4667 Fax 435-787-8772 jjenkins@ducworks.com	AISC	October 31, 2014
GEM Buildings (Golden Empire Manuf.) 1025 North Watery Lane Brigham City, UT 84302	Kevin Kotter 435-538-5390 kevink@gembuildings.com	AISC CCDDS-BD	March 3, 2015 June 2, 2014
H.A. Fabricators, Inc 349 West 2500 North Logan, UT 84341	Justin Bennett 435-750-5050 Justin@hafab.net	CCDDS-BD AISC	February 16, 2015 October 31, 2014
JT STEEL, Inc 9550 South Hawley Park Road West Jordan, Utah 84081	Brian Stephensen 801-280-3520 Fax 801-280-8198 bstephensen@jtsteel.com	CCDDS-BD AISC	March 15, 2014 August 31, 2014
K & J Steel, Inc. 1680 East Washington Dam Road Washinton, Utah 84780	Brian Stephensen 801-280-3520 Kandjsteel@infowest.com	CCDDS-BD AISC	May 30, 2014 February 2, 2015
Legacy Steel Fabricators 575 West 3615 South Salt Lake City 84115	Lance Strouse 801-262-3303 Fax 801 262-3407 gc@legacysteel.net	CCDDS-BD	November 8, 2014
Lundahl Ironworks Comp. 102 South 100 West P.O. Box 59 Franklin, ID 83237	Mack Hafen 208-646-2600 Fax 208-646-2700 mehafen@lundahlironworks.com	AISC CCDDS-BD	October 31, 2014 October 30, 2014
Mountain States Steel, Inc. 325 South Geneva Road Lindon, Utah	Geaniel Rowley 801-785-5085 ext. 227 geaniel@mssteel.com	AISC CWB	March 31, 2014 March 26, 2015
NCI Building Systems, INC 10943 North Sam Houston Parkway West Huston, TX 77064	281-897-7788		
NCI Approved Shops			
1880 Hwy 116 Caryville, TN 37714	Charles Snodderly 865-426-2141 charles.snodderly@ncilp.com	IAS	August 25, 2014
151 Judge Doe Lewis Rd. Elizabethton, TN 37643	Steven Hicks 423-542-5047 EXT 4262 steven.hicks@ncilp.com	IAS	January 13, 2015
7301 Fairview Houston, TX 77041	Jeremian Tubbs 731-450-0400 jeremiah.tubbs@ncilp.com	IAS	August 25, 2014
2714 Sourh Garfield Rd. Airway Heights, Washington 99001	Glen Morris 509-244-5611 glen.morris@ncilp.com	IAS	January 13, 2015
101 West South St. Monticello, Iowa 52310	Cal Woodard 319-465-3595 EXT 1253 cal.woodard@ncilp.com	IAS	January 13, 2015
NUCOR Building Systems PO BOX 907	Dana M. Christensen 435 919-3252	QUASAR CCDDS-BD	January 12, 2015 December 17, 2014
1050 North Watery Lane Brigham City, UT 84302	dchristensen@nbsut.com	IAS	July 10, 2014
PORTER CORP 4240 North 136th Avenue Holland, MI 49424	Diana Ross (801) 274-0212 playspace2@earthlink.net	CCDDS-BD	March 20, 2015
R & M Steel Company 20595 Farmway Rd. P.O. Box 580 Caldwell, ID 83606	Robert Roberts 208-454-1800 Fax 208-454-1801 sales.rmsteel@gmail.com	QUASAR	October 6, 2014
Rule Steel 11299 Bass Lane Caldwell, Idaho 83605	Ron Allen 208-585-3031 208.585.2506 ron.allen@rulesteel.com	AISC	April 30, 2014
Sanpete Steel PO Box 599 685 East Main Moroni, Utah 84646	Brandon Mellor 435-436-2568 bmellor@sanpetesteel.com	AISC	February 28, 2015
SunSteel LLC 2002 Morgan Rd. Sunnyside Wa 98944	Maria Sandoval 509-837-7008 msandoval@sunsteelllc.com	AISC	June 30, 2014
TECH-STEEL, INC PO BOX 160386 Clearfield, UT 84016	Quin Harmon 801 328-2543 quin@tech-steel.com	AISC	October 31, 2014
T & M Manufacturing Inc. 1110 North 1000 West Tremonton, Utah, 84337	Travis Scott 435-257-1400 tscott@tmmfg.com	AISC	March 31, 2015
Utah Ornamental & Iron, Inc 2750 West 900 South Salt Lake City, Utah 84104	John Grande Jr. 801-973-8678 utahornjohnjr@qwestoffice.net	CCDDS-BD AISC	March 16, 2013 April 30, 2014
Wedgcor Steel Bldg **Rockford MFG/Sunward Corp.** 1515 Buisess Loop East PO Box 110 Jamestown, North dakota 58401	Doug Hicks (701) 252-7390 x6258 dhicks@scg-grp.com	IAS	November 8, 2014
		Updated:	April 1, 2014

FABRICATORS (IBC 1704.2.5)

☒ Approved Fabricator	Yes	No	☐ Unapproved Fabricator	Yes	No

Fabricators Name:	
Fabricators plant location	

Required In-plant Inspections: ☐ Steel Construction ☐ Concrete Construction ☐ Wood Construction ☐ Cold-formed Construction ☐ Other: _____ ☐ Other: _____

STRUCTURAL STEEL (IBC 1705.2.1, 1705.11.1 & 1705.12.2)

Item			Detailed Instructions and Frequencies
PRIOR TO WELDING (TABLE N5.4-1, AISC 360-10):			
Verify welding procedures (WPS) and consumable certificates	☐ Continuous	☒ Periodic	
Material identification	☐ Continuous	☒ Periodic	Verify type and grade of material.
Welder identification	☒ Continuous	☒ Periodic	A system shall be maintained by which a welder who has welded a joint or member can be identified.
Fit-up groove welds	☒ Continuous	☒ Periodic	Verify joint preparation, dimensions, cleanliness, tacking, and backing.
Access holes	☐ Continuous	☒ Periodic	Verify configuration and finish.
Fit-up of fillet welds	☐ Continuous	☒ Periodic	Verify alignment, gaps at root, cleanliness of steel surfaces, and tack weld quality and location.
DURING WELDING (TABLE N5.4-2, AISC 360-10):			
Use of qualified welders	☐ Continuous	☒ Periodic	Verify that welders are appropriately qualified.
Control and handling of welding consumables	☐ Continuous	☒ Periodic	Verify packaging and exposure control.
Cracked tack welds	☐ Continuous	☒ Periodic	Verify that welding does not occur over cracked tack welds.
Environmental conditions	☐ Continuous	☒ Periodic	Verify win speed is within limits as well as precipitation and temperature.
WPS followed	☐ Continuous	☒ Periodic	Verify items such as settings on welding equipment, travel speed, welding materials, shielding gas type/flow rate, preheat applied, interpass temperature maintained, and proper position.
Welding techniques	☐ Continuous	☒ Periodic	Verify interpass and final cleaning, each pass is within profile limitations, and quality of each pass.
AFTER WELDING (TABLE N5.4-3, AISC 360-10):			
Welds cleaned	☐ Continuous	☒	Verify that welds have been propyl cleaned.
Size, length, and location of welds	☒ Continuous	☐	
Welds meet visual acceptance criteria	☒ Continuous	☐	
Arc strikes	☒ Continuous	☐	
k-area	☒ Continuous	☐	
Backing & weld tabs removed	☒ Continuous	☐	
Repair activities	☒ Continuous	☐	
Document acceptance or rejection of welded joint/member	☒ Continuous	☐	
NONDESTRUCTIVE TESTING (SECTION N5.5, AISC 360-10):			
CJP welds (Risk Cat. II)	☐ Continuous	☒ Periodic	Ultrasonic testing shall be performed on 10% of CJP groove welds in butt, T- and corner joints subject to transversely applied tension loading in materials 5/16-inch thick or greater. Testing rate must be increased if > 5% of welds tested have unacceptable defects.
CJP welds (Risk Cat. III or IV)	☒ Continuous	☐ Periodic	***A reduction in the rate of ultrasonic testing is allowed per Section N5.5e.***
Access holes (flange > 2")	☒ Continuous	☐ Periodic	
Welded joints subject to fatigue	☒ Continuous		
PRIOR TO BOLTING (TABLE N5.6-1, AISC 360-10): *Not required if only snug-tight joints are specified [per Section N5.6(1) of AISC 360-10].*			
Certifications of fasteners	☒ Continuous	☐ Periodic	
Fasteners marked	☐ Continuous	☒ Periodic	Verify that fasteners have been marked in accordance with ASTM requirements.
Proper fasteners for joint	☐ Continuous	☒ Periodic	Verify grade, type, and bolt length if threads are excluded from the shear plane.
Proper bolting procedure	☐ Continuous	☒ Periodic	Verify proper procedure is used for the joint detail.
Connecting elements	☐ Continuous	☒ Periodic	Verify appropriate faying surface condition and hole preparation, if specified, meet requirements
Pre-installation verification testing	☐ Continuous	☒ Periodic	Observe and document verification testing by installation personnel for fastener assemblies and methods used.
Proper storage	☐ Continuous	☒ Periodic	Verify proper storage of bolts, nuts, washers, and other fastener components.
DURING BOLTING (TABLE N5.6-2, AISC 360-10): *Not required if only snug-tight joints are specified [per Section N5.6(1) of AISC 360-10]. Not required for pretensioned joints using turn-of-the-nut method with match-marking, direct-tension-indicators, or twist-off type tension control method [per Section N5.6(2) of AISC 360-10].*			
Fastener assemblies	☐ Continuous	☒ Periodic	Verify that fastener assemblies are of suitable condition, paced in all holes, and washers are positioned as required.
Snug-tight prior to pretensioning	☐ Continuous	☒ Periodic	Verify that joints are brought to snug-tight condition prior to pretensioning operation.
Fastener component	☐ Continuous	☒ Periodic	Verify that fastener component is not turned by wrench prevented from rotating.
Pretensioned fasteners	☐ Continuous	☒ Periodic	Verify that fasteners are Pretensioned in accordance with RCSC Specification, progressing systematically from the most rigid point toward the free edges.
AFTER BOLTING (TABLE N5.6-3, AISC 360-10):			
Document acceptance or rejection of bolted connections	☒ Continuous	☐ Periodic	
OTHER STEEL INSPECTIONS (SECTION N5.7, AISC 360-10; Tables J8-1 & J10-1, AISC 341-10):			
Structural steel details	☐ Continuous	☒ Periodic	All fabricated steel or steel frames shall be inspected to verify compliance with the details shown in the construction documents, such as braces, stiffeners, member locations, and proper application of joint details at each connection.
Anchor rods and other embedments supporting structural steel	☐ Continuous	☒ Periodic	Shall be on the premises during the placement of anchor rods and other embedments supporting structural steel for compliance with construction documents. Verify the diameter, grade, type, and length of the anchor rod or embedded item, and the extent or depth of embedment prior to placement of concrete.

CRSA
649 E. South Temple
Salt Lake City, UT 84102
801.355.5915

MWL
11798 N. Lakeridge Pkwy.
Ashland, VA 23005
804-228-7473

State of Utah
Department of Administrative Services
Division of Facilities Construction & Management
4110 State Office Building
Salt Lake City, Utah 84114
Phone: (801) 538 - 3018
Fax: (801) 538 - 3267

DIVISION OF FACILITIES CONSTRUCTION AND MANAGEMENT
REVIEWED FOR CODE COMPLIANCE
SIGNATURE: Ernie Gelfe
DATE: 08-05-2014

STATE OF UTAH #134096 MEHRDAD SAMII LICENSED ARCHITECT
04.28.2014
ARCHITECT-ENGINEER STAMP

Unified State Laboratory Module 2

4451 South 2700 West, Taylorsville, UT 84118

DFCM #: 13020300
Project #: B13-024

DATE:	ISSUE TYPE:
APRIL 21, 2014	BID SET
CHECKED BY	J. NIELSEN
DRAWN BY	F. PITORE

SPECIAL INSPECTIONS

GI004

VOLUME 1

C:\Users\fernando\Documents_A_13024_Modif_2013_fernando.rvt
7/14/2014 1:13:45 PM

Item			Detailed Instructions and Frequencies
Reduced beam sections (RBS)	☐ Continuous	☒ Periodic	Verify contour and finish as well as dimensional tolerances *(see Table J8-1 of AISC 341-10)*.
Protected zones	☐ Continuous	☒ Periodic	Verify that no holes or unapproved attachments are made within the protected zone *(see Table J8-1 of AISC 341-10)*.
H-piles	☒ Continuous	☐ Periodic	Verify that no holes or unapproved attachments occur within the protected zones of piling *(see Table J10-1 of AISC 341-10)*.
STEEL ELEMENTS OF COMPOSITE CONSTRUCTION (TABLE N6.1, AISC 360-10; TABLES J9-1 thru J9-3, AISC 341-11):			
Placement and installation of steel deck	☒ Continuous	☐ Periodic	
Placement and installation of steel headed stud anchors	☒ Continuous	☐ Periodic	
Document acceptance or rejection of steel elements	☒ Continuous	☐ Periodic	
Reinforcing steel	☐ Continuous	☒ Periodic	Verify appropriate reinforcement size, spacing, and orientation; that it has not been re-bent in field; that it is correctly tied and supported; and that required steel clearances have been provided.
Composite member size	☐ Continuous	☒ Periodic	Verify that composite member is the required size.

STEEL CONSTRUCTION OTHER THAN STRUCTURAL STEEL (IBC 1705.2.2)

Item			Detailed Instructions and Frequencies
STEEL ROOF AND FLOOR DECKS (IBC TABLE 1705.2.2):			
Material verification of cold-formed steel deck	☐ Continuous	☒ Periodic	Confirm that identification markings are provided to conform to ASTM standards specified on construction documents.
Floor and roof deck welds	☐ Continuous	☒ Periodic	Visual inspection is required to confirm that weld meets acceptance criteria of AWS D1.3. Welder qualifications should also be verified.
WELDING OF REINFORCING STEEL (IBC TABLE 1705.2.2):			
Verification of weldability	☐ Continuous	☒ Periodic	Verify weldability of reinforcing steel based upon carbon equivalent and in accordance with AWS D1.4.
Reinforcing steel in intermediate or special moment farnes, and boundary elements of special structural walls	☒ Continuous	☐ Periodic	
Shear reinforcement	☒ Continuous	☐ Periodic	
Other reinforcing steel	☐ Continuous	☒ Periodic	Visually inspect all welds in accordance with AWS D1.4.
COLD-FORMED STEEL CONSTRUCTION (IBC 1705.2.2.1.1, 1705.10.3, and 1705.11.3):			
Wind-force-resisting systems or seismic-force-resisting systems	☐ Continuous	☒ Periodic	Periodic inspections of welding operations. If fastener spacing is < 4"o.c.: Verify that proper screw attachment, bolting, anchoring and other fastening of shear walls, diaphragms, drag struts, braces, shear panels and holdowns has occurred. Performed by code inspection firm.

CONCRETE CONSTRUCTION (IBC 1705.3 & 1705.12.1)

Item			Detailed Instructions and Frequencies
Reinforcing steel, including prestressing tendons	☐ Continuous	☒ Periodic	Verify prior to placing concrete that reinforcing is of specified type, grade and size; that it is free of oil, dirt and rust; that it is located and spaced properly; that hooks, bends, ties, stirrups and supplemental reinforcement are placed correctly; that lap lengths, stagger and offsets are provided; and that all mechanical connections are installed per the manufacturer's instructions and/or evaluation report.
Cast-in bolts & embeds	☒ Continuous	☐ Periodic	Inspection of anchors or embeds cast in concrete is required when allowable loads have been increased or where strength design is used.
Post-installed anchors or dowels	☒ Continuous	☐ Periodic	All post-installed anchors/dowels shall be specially inspected as required by the approved ICC-ES report.
Use of required mix design	☐ Continuous	☒ Periodic	Verify that all mixes used comply with the approved construction documents; ACI 318: Ch. 4, 5.2-5.4; and IBC 1904.3, 1913.2, 1913.3.
Concrete sampling for strength tests, slump, air content, and temperature	☒ Continuous	☐ Periodic	
Concrete & shotcrete placement	☒ Continuous	☐ Periodic	
Curing temperature and techniques	☐ Continuous	☒ Periodic	Verify that the ambient temperature for concrete is kept at > 50°F for at least 7 days after placement. High-early-strength concrete shall be kept at > 50°F for at least 3 days. Accelerated curing methods may be used (see ACI 318: 5.11.3). The ambient temperature for shotcrete shall be > 40°F for the same period of time as noted for concrete. Shotcrete shall be kept continuously moist for at least 24 hours after shotcreting. All concrete materials, reinforcement, forms, fillers, and ground shall be free from frost. In hot weather conditions ensure that appropriate measures are taken to avoid plastic shrinkage cracking and that the specified water/cement ratio is not exceeded.
Pre-stressed concrete	☒ Continuous	☐ Periodic	
Erection of precast concrete	☐ Continuous	☒ Periodic	Verify that all precast elements are lifted, assembled and braced in accordance with the approved construction documents.
Strength verification	☐ Continuous	☒ Periodic	Verify that adequate strength has been achieved prior to the removal of shores and forms or the stressing of post-tensioned tendons.
Formwork	☐ Continuous	☒ Periodic	Verify that the forms are placed plumb and conform to the shapes, lines, and dimensions of the members as required by the approved construction documents.
Reinforcement complying with ASTM A 615 in special moment frames, special structural walls and coupling beams	☐ Continuous	☒ Periodic	Verify that ASTM A 615 reinforcing steel used in these areas complies with ACI 318: 21.1.5.2 by means of certified mill test reports. If this reinforcing steel is to be welded chemical tests shall be performed in accordance with ACI 318: 3.5.2.

MASONRY CONSTRUCTION (IBC 1705.4)

Item			Detailed Instructions and Frequencies
PRIOR TO CONSTRUCTION (ARTICLE 1.15, TMS-602/ACI 530.1-11):			
Review material certificates, mix designs, test results and construction procedures	☐ Continuous	☒ Periodic	Verify that materials conform to the requirements of the approved construction documents. Mix design, test results, material certificates, and construction procedures should be submitted for review. Mortar mix designs shall conform to ASTM C 270 while grout shall conform to ASTM C 476. Material certificates shall be provided for the following: reinforcement; anchors, ties, fasteners, and metal accessories; masonry units; mortar and grout materials. Construction procedures for cold-weather or hot-weather construction shall be reviewed.
AS CONSTRUCTION BEGINS (TABLE 1.19.2, TMS-402/ACI 530-11):			
Proportions of site-prepared mortar	☐ Continuous	☒ Periodic	Verify that mortar is of the type and color specified on the construction documents, that it conforms to ASTM C 270, and that it is mixed in accordance with Article 2.6 A of TMS-602/ACI 530.1-11.
Construction of mortar joints	☐ Continuous	☒ Periodic	Verify that mortar joints comply with Article 3.3 B of TMS-602/ACI 530.1-11.
Grade and size of prestressing tendons and anchorages	☐ Continuous	☒ Periodic	Verify that prestressing tendons comply with Article 2.4 B of TMS-602/ACI 530.1-11 and that anchorages, couplers, and end blocks comply with Article 2.4 H.
Location of reinforcement, connectors, and prestressing tendons and anchorages	☐ Continuous	☒ Periodic	Verify that reinforcement is placed in accordance with Article 3.4 of TMS-602/ACI 530.1-11. Prestressing tendons shall be placed per Article 3.6 A.
Prestressing technique	☐ Continuous	☒ Periodic	Verify that prestressing technique complies with Article 3.6 B of TMS-602/ACI 530.1-11.
Properties of thin-bed mortar for AAC masonry	☐ Continuous	☒ Periodic	Verify that mortar complies with Article 2.1 C of TMS-602/ACI 530.1-11.
PRIOR TO GROUTING (TABLE 1.19.2, TMS-402/ACI 530-11):			
Grout space	☐ Continuous	☒ Periodic	Verify that grout space is free of mortar droppings, debris, loose aggregate, and other deleterious materials and that cleanouts are provided per Article 3.2 D and 3.2 F of TMS-602/ACI 530.1-11. *Continuous inspection is required for Risk Category IV buildings.*
Grade, type, and size of reinforcement and anchor bolts, and prestressing tendons and anchorages	☐ Continuous	☒ Periodic	Verify that reinforcement, joint reinforcement, wall ties, anchor bolts and veneer anchors comply with the approved construction documents and Section 1.6 of TMS 402/ACI 530-11.
Placement of reinforcement, connectors, and prestressing tendons and anchorages	☐ Continuous	☒ Periodic	Verify that reinforcement, joint reinforcement, wall ties, anchor bolts and veneer anchors are installed in accordance with the approved construction documents and Articles 3.2 E, 3.4, and 3.6 A of TMS 602/ACI 530.1-11. *Continuous inspection is required for Risk Category IV buildings.*
Proportions of site-prepared grout and prestressing grout for bonded tendons	☐ Continuous	☒ Periodic	Verify that grout is proportioned per ASTM C 476 and has a slump between 8-11 inches. Self-consolidated grout shall not be proportioned onsite. (see Articles 2.6 B and 2.4 G.1.b of TMS 602/ACI 530.1-11. *Continuous inspection is required for Risk Category IV buildings.*
Construction of mortar joints	☐ Continuous	☒ Periodic	Verify that mortar joints are placed in accordance with Article 3.3 B of TMS 602/ACI 530.1-11.
DURING MASONRY CONSTRUCTION:			
Size and location of structural elements	☐ Continuous	☒ Periodic	Verify the locations of structural elements with respect to the approved plans and confirm that tolerances meet the requirements of Article 3.3 F of TMS 602/ACI 530.1-11
Type, size, and location of anchors, including other details of anchorage of masonry to structural members, frames, or other construction.	☐ Continuous	☒ Periodic	Verify that correct anchorages and connections are provided per the approved plans and Sections 1.16.4.3 and 1.17.1 of TMS 402/ACI 530-11. *Continuous inspection is required for Risk Category IV buildings.*
Welding of reinforcement	☒ Continuous	☐ Periodic	
Preparation, construction, and protection of masonry during cold weather (<40°F) or hot weather (>90°F).	☐ Continuous	☒ Periodic	Verify that cold-weather construction is performed in accordance with Article 1.8 C of TMS 602/ACI 530.1-11 and hot weather construction per Article 1.8 D of TMS 602/ACI 530.1-11
Application and measurement of prestressing force	☒ Continuous	☐ Periodic	
Placement of grout and prestressing grout for bonded tendons is in compliance	☒ Continuous	☐ Periodic	
Placement of AAC masonry units and construction of thin-bed mortar joints	☐ Continuous	☒ Periodic	Verify that mortar is placed in accordance with Article 3.3 B.8 of TMS-602/ACI 530.1-11.
Observation of grout specimens, mortar specimens, and/or prisms	☐ Continuous	☒ Periodic	Confirm that specimens/prisms are performed as required by Article 1.4 of TMS-602/ACI 530.1-11. *Continuous inspection is required for Risk Category IV buildings.*
MINIMUM TESTING:			
Verification of Slump Flow and Visual Stability Index (VSI) for self-consolidating grout	☐ Continuous	☒ Periodic	Compressive strength tests should be performed in accordance with ASTM C 1019 for slump flow and ASTM C 1611 for VSI.
Verification of f'_m and f'_{AAC}	☐ Continuous	☒ Periodic	Determine the compressive strength for each wythe by the "unit strength method" or by the "prism test method" as specified in Article 1.4 B of TMS 602/ACI 530.1-11 prior to construction. *For Risk Category IV buildings this should be verified at every 5,000ft² of construction.*
Verification of proportions of materials in premixed or pre-blended mortar and grout	☐ Continuous	☒ Periodic	Verify that proportions for mortar meet ASTM C 270 and proportions for grout meet ASTM C 476. This applies to *Risk Category IV buildings only.*

SOILS CONSTRUCTION (IBC 1705.6)

Item			Detailed Instructions and Frequencies
PRIOR TO CONSTRUCTION (ARTICLE 1.15, TMS-602/ACI 530.1-11):			
Verify subgrade is adequate to achieve design bearing capacity	☐ Continuous	☒ Periodic	Prior to placement of concrete.
Verify excavations extend to proper depth and material	☐ Continuous	☒ Periodic	Prior to placement of compacted fill or concrete.
Verify that subgrade has been appropriately prepared prior to placing compacted fill	☐ Continuous	☒ Periodic	Prior to placement of compacted fill.
Perform classification and testing of compacted fill materials	☐ Continuous	☒ Periodic	All materials shall be checked at each lift for proper classifications and gradations not less than once for each 10,000ft² of surface area.
Verify proper materials, densities and lift thicknesses during placement and compaction.	☒ Continuous	☐ Periodic	

SPRAYED FIRE-RESISTANT MATERIALS (IBC 1705.13)

Item			Detailed Instructions and Frequencies
Surface preparation	☐ Continuous	☒ Periodic	Prior to application confirm that surface has been prepared per the approved fire-resistance design and manufacturer's instructions.
Material thickness	☐ Continuous	☒ Periodic	Samples shall be taken from selected floor, roof and wall assemblies and structural members. No more than 10% of the samples shall be less than the thickness required by the fire-resistance design.
Material density	☐ Continuous	☒ Periodic	Density tests shall be performed in accordance with ASTM E 605 for every 2,500ft² of floor, roof or wall area. One sample must also be provided for each beam, girder, truss or column at each story.
Bonding strength	☐ Continuous	☒ Periodic	Bond strength tests shall be performed in accordance with ASTM E 736 for every 2,500ft² of floor, roof or wall area. One sample must also be provided for each beam, girder, truss or column at each story. The bond strength shall not be less than 150psf.
Perform additional inspections for steel. concrete or other specialty elements.	☐ Continuous	☒ Periodic	Steel per IBC 1705.2 Concrete per IBC 1705.3 Specialty items per registered design professional

FIRE-RESISTANT PENETRATIONS AND JOINTS (IBC 1705.16)

Only required for high-rise buildings or those assigned to Risk Category III or IV per IBC Table 1604.5.

Item			Detailed Instructions and Frequencies
PRIOR TO CONSTRUCTION (ARTICLE 1.15, TMS-602/ACI 530.1-11):			
Penetration firestops	☐ Continuous	☒ Periodic	Listed systems shall be inspected in accordance with ASTM E 2393.
Fire-resistant joint systems	☐ Continuous	☒ Periodic	Listed systems shall be inspected in accordance with ASTM E 2393.

ARCHITECTURAL COMPONENTS (IBC 1705.11.5 & 1705.11.7)

Only required for buildings located within Seismic Design Category D, E, or F.

Item			Detailed Instructions and Frequencies
PRIOR TO CONSTRUCTION (ARTICLE 1.15, TMS-602/ACI 530.1-11):			
Erection and fastening of exterior cladding or interior and exterior veneers	☐ Continuous	☒ Periodic	Verify appropriate materials, fasteners and attachment at commencement of work and at completion. Performed by code inspection firm. (Not required if < 30 feet or less than 5psf).
Erection and fastening of interior and exterior nonbearing walls	☐ Continuous	☒ Periodic	Verify appropriate materials, fasteners and attachment at commencement of work and at completion. Performed by code inspection firm. (Not required if < 30 feet or for interior walls < 15psf).
Storage racks	☐ Continuous	☒ Periodic	Verify that anchorage complies with approved construction documents. Inspection of post-installed anchors shall comply with approved ICC-ES report. ***Performed by code inspection firm.***

MECHANICAL & ELECTRICAL COMPONENTS (IBC 1705.11.4 & 1705.11.6)

Only required for buildings located within Seismic Design Category D, E, or F.

Item			Detailed Instructions and Frequencies
PRIOR TO CONSTRUCTION (ARTICLE 1.15, TMS-602/ACI 530.1-11):			
Anchorage of emergency or standby power systems	☐ Continuous	☒ Periodic	Verify that anchorage complies with approved construction documents. ***Performed by code inspection firm.***
Installation of HVAC ductwork containing hazardous materials	☐ Continuous	☐ Periodic	Verify that installation and restraint comply with approved construction documents. ***Performed by code inspection firm***
Installation of vibration isolation systems having a clearance of ≤¼"	☐ Continuous	☐ Periodic	Verify that installation complies with approved construction documents and manufacturer's recommendations. ***Performed by code inspection firm.***
Designated seismic systems	☐ Continuous	☐ Periodic	Confirm that manufacturer's certificate of compliance conforms to the requirements of Section 13.2 of ASCE 7-10. Verify that the label, anchorage or mounting conforms to the manufacturer's certificate of compliance. ***Performed by code inspection firm.***

CRSA

649 E. South Temple
Salt Lake City, UT 84102
801.355.5915

MWL

11798 N. Lakeridge Pkwy.
Ashland, VA 23005
804-228-7473

State of Utah
Department of Administrative Services
Division of Facilities Construction & Management
4110 State Office Building
Salt Lake City, Utah 84114
Phone: (801) 538 - 3018
Fax: (801) 538 - 3267

DIVISION OF FACILITIES CONSTRUCTION AND MANAGEMENT
REVIEWED FOR CODE COMPLIANCE
SIGNATURE: Ernie Calle
DATE: 08-05-2014

STATE OF UTAH #134096 MEHRDAD SAMII LICENSED ARCHITECT
04-28-2014
ARCHITECT-ENGINEER STAMP

Unified State Laboratory Module 2

4451 South 2700 West, Taylorsville, UT 84118

DFCM #: 13020300
Project #: B13-024

DATE:	ISSUE TYPE:
APRIL 21, 2014	BID SET
CHECKED BY	J. NIELSEN
DRAWN BY	F. PITORE

SPECIAL INSPECTIONS

GI005

VOLUME 1

C:\Users\fernando\Documents_A_13024_Modli_2013_fernando.rvt
7/14/2014 11:35:0 PM

GENERAL NOTES

- GENERAL CONTRACTOR SHALL FIELD VERIFY ALL CONDITIONS AND SHALL REPORT TO THE ARCHITECT ANY UNKNOWN CONDITIONS, ERRORS OR CONFLICTS IN THE DRAWINGS BEFORE BEGINNING WORK.
- DO NOT SCALE DRAWINGS.

GRAPHIC LEGEND

CONCRETE PAVING	
FENCE	X——X
EXISTING	
TUNNEL	
CONSTRUCTION LIMIT LINE	

CALCULATIONS

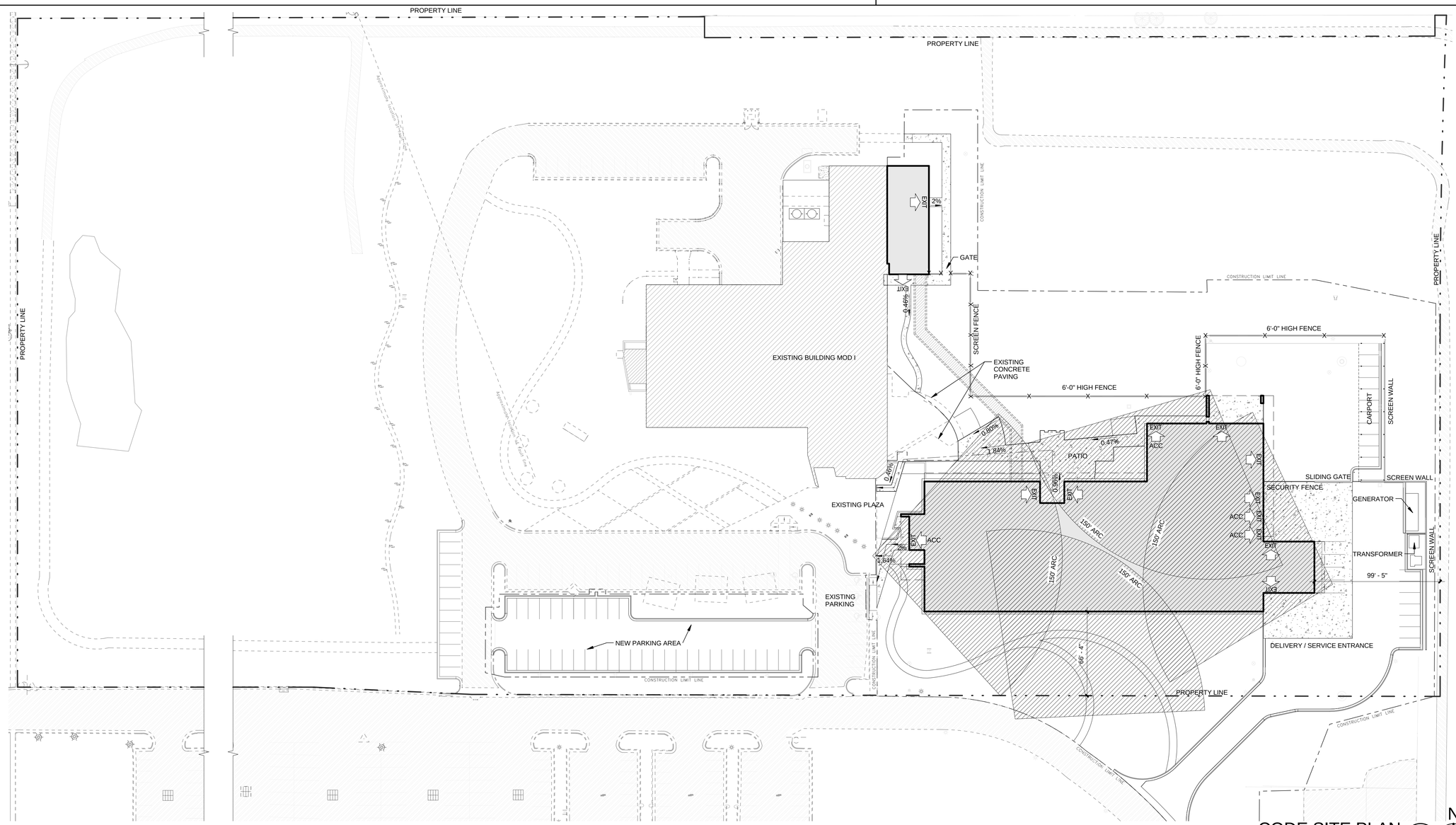

CODE SITE PLAN

1" = 40'-0"

A5 / GI006

N

CRSA

649 E. South Temple
Salt Lake City, UT 84102
801.355.5915

M1WL

11798 N. Lakeridge Pkwy.
Ashland, VA 23005
804-228-7473

State of Utah
Department of Administrative Services

DFCM
Division of Facilities Construction & Management
4110 State Office Building
Salt Lake City, Utah 84114
Phone: (801) 538 - 3018
Fax: (801) 538 - 3267

DIVISION OF FACILITIES CONSTRUCTION AND MANAGEMENT
REVIEWED FOR CODE COMPLIANCE
SIGNATURE: Ernie Gelfe
DATE: 08-05-2014

STATE OF UTAH
#134096
MEHRDAD SAMII
LICENSED ARCHITECT
04.28.2014
ARCHITECT-ENGINEER STAMP

Unified State Laboratory Module 2

4451 South 2700 West, Taylorsville, UT 84118

DFCM #: 13020300

Project #: B13-024

DATE:	ISSUE TYPE:
APRIL 21, 2014	BID SET

CHECKED BY	J. NIELSEN
DRAWN BY	F. PITORE

SITE CODE PLAN

GI006

VOLUME 1

C:\Users\fernando\Documents_A_13024_Modli_2013_fernando.rvt
7/14/2014 1:14:00 PM

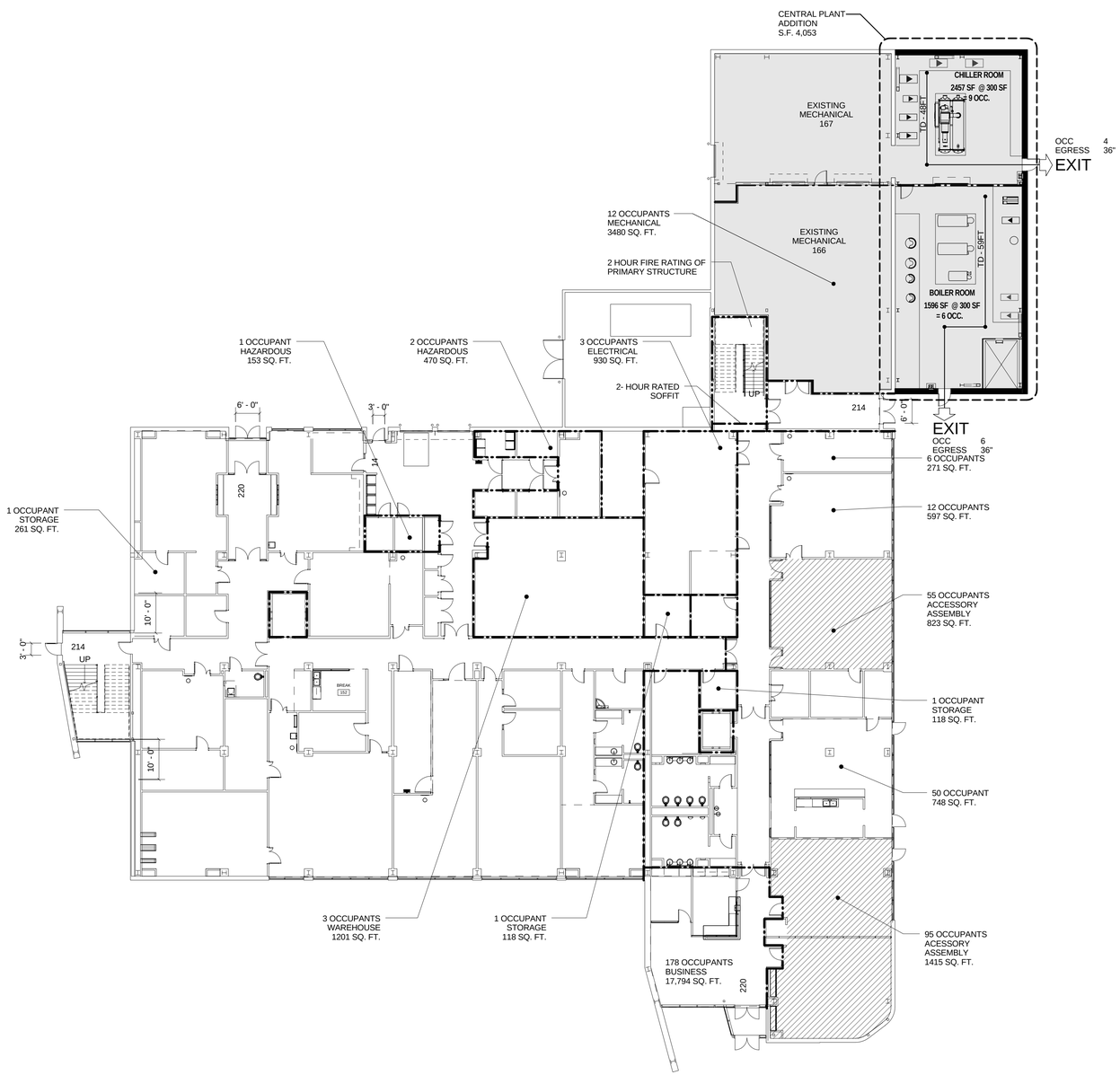

LEVEL ONE CODE PLAN EXISTING MODULE 1

A4 / GI007

1/16" = 1'-0"

N

CODE ANALYSIS

APPLICABLE CODES

	Year		Year
International Building Code	2012	National Electrical Code	2011
International Mechanical Code	2012	Uniform Code for Building Conservation	N/A
International Plumbing Code	2012	ADA Accessibility Guidelines	2010
International Fire Code	2012		
International Energy Conservation Code			

A. Occupancy and Group: B and S-1 Non separated, H-2 separated and A-3 Accessory Use

Change in Use: Yes _____ No X Mixed Occupancy: Yes _____ No X

*Level 1 - S-1 and B occupancies not separated, A-3 accessory and H-2 separated from adjacent B and S-1 uses by 2 hours. All other levels, not separated.

Special Use and Occupancy (e.g. High Rise, Covered Mall); Atrium

B. Seismic Design Category: D Design Wind Speed: 115 MPH

C. Type of Construction (circle one):

I A I B (II A) II B III A III B IV HT V A V B

D. Fire Resistance Rating Requirements for the Exterior Walls based on the fire

North: 0 South: 0 East: 0 West: 0

E. Mixed Occupancies: _____ Unconsecrated Uses: X (S-1 Is Most Restrictive)

separation distance (in hours):

F: Sprinklers:

Required: X Provided: _____ Type of Sprinkler System: NFPA 13

G: Number of Stories: 3 Building Height: 69' - 6"

H: Actual Area per Floor (square feet): Level 1: 31,193; Level 2: 21,740; Level 3: 21,740

I: Tabular Area: S-1: 26,000 sf Per Floor Total=74,673

J: Area Modifications:

a) $A_a = A_t + \left[A_t I_f\right]$ $I_f = \left[\frac{F}{P} - 0.25\right]\frac{W}{30}$

$A_a = 45{,}500 = 26{,}000 + \left[26{,}000 \times .75\right]$

$I_f = .75 = \left[\frac{970'}{970'} - 0.25\right]\frac{30}{30}$

b) Sum of the Ratio Calculations for Mixed Occupancies: Level 1

Area Value = Actual Area S-1 / Allowable area S-1 + Actual Area H-2 / Allowable area H-2 = <1

Area Value = 27,973 SF / 45,500 SF + 623 SF / 19,250 SF = 0.61 + 0.03 = 0.64

c) Total Allowable Area for:

1) One Story: 45,500

2) Two Story: $A_a(2)$ 91,000

3) Three Story: $A_a(3)$ 136,500

d) Unlimited Area Building: Yes _____ No X Code Section: 503

K. Fire Resistance Rating Requirements for Building Elements (hours).

Element	Hours	Assembly Listing	Element	Hours	Assembly Listing
Exterior Bearing Walls	0		Floors - Ceiling Floors	1**	D925
Interior Bearing Walls	0		Roofs - Ceiling Roofs	0	
Exterior Non-Bearing Walls	0		Exterior Doors and Windows	0	
Structural Frame	1**	X771,772	Shaft Enclosures	1	U469
Partitions - Permanent	0		Fire Walls	N/A	
Fire Barriers	1	U465*	Fire Partitions	N/A	
			Smoke Partitions	N/A	

e. An approved automatic sprinkler system in accordance with Section 903.3.1.1 shall be allowed to be substituted for 1-hour fire-resistance-rated construction, provided such system is not otherwise required by others provisions of the code or used for an allowable area increase in accordance with Section 506.3 or an allowable height increase in accordance with Section 504.2. The 1-hour substitution for the fire resistance of exterior walls shall not be permitted.

* Sprinkler glazing protection system at atrium per ICC Evaluation NER-516 (Except spinkers shall be at 6' on center per IBC 106.3.4.2)

** Where 1 hour rating is required, per sheet GI003.

L. Design Occupant Load: 884 OVERALL/ 435 LEVEL 1

Exit Width Required: 176.8" Exit Width Provided: 252

Design Occupant Load: 211 LEVEL 2

Exit Width Required: 31.7" Exit Width Provided: 72

Design Occupant Load: 215 LEVEL 3

Exit Width Required: 32.3" Exit Width Provided: 72

Design Occupant Load: 23 PENTHOUSE

Exit Width Required: 3.45" Exit Width Provided: 72

M. Minimum Number of Required Plumbing Facilities:

a) Water Closets - Required (m) 9 (f) 11 Provided (m) 13 (f) 13

b) Lavatories - Required (m) 7 (f) 7 Provided (m) 10 (f) 10

c) Bath Tubs or Showers: 2

d) Drinking Fountains: 7 Service Sinks: 1

N. Penthouse area - 6,750 SQ. FT / 25,325 SQ.FT = .27

FOOTNOTES:

1) In case of conflict with the U.S. Department of Justice Federal Registers Parts I through V - ADA Guidelines and specific reference to the International Building Code Accessibility Chapters, the more restrictive requirement shall govern.

2) Additional Code Information shall be provided at the discretion of the Building Official for Complex Buildings. Including, but not limited to:

a) High Rise Requirements.
b) Atriums.
c) Performance Based Criteria.
d) Means or Egress Analysis.
e) Fire Assembly Locator Sheet.
f) Exterior and Interior Accessibility Route.
g) Fire Stopping, Including Tested Design Number.

3) Secundary containment is provided for Rooms 143 and 144. This is achieved with masonry walls and a 6" concrete curb at the doors.

4) CONSTRUCTION OF NEW STATE BUILDINGS AND REMODELING OF EXISTING BUILDINGS SHALL COMPLY WITH ALL OF THE REQUIREMENTS OF THE DFCM STANDARDS, INCLUDING ENHANCED ACCESSIBILITY . THE DFCM STANDARDS CAN BE FOUND AT THE FOLLOWING WEBSITE: www.dfcm.utah.gov

KEYED NOTES

TOTAL SQUARE FOOTAGE MECHANICAL 4,053 SF

OCCUPANCY

ACCESSORY STORAGE, MECHANICAL @ 300

TOTAL MECHANICAL OCC 15

EGRESS WIDTH

DOOR EGRESS WIDTH 3" REQUIRED

36" PROVIDED

PLUMBING

WATER CLOSET N/A

LAVATORIES N/A

DRINKING FOUNTAINS N/A

GRAPHIC LEGEND

15 OCCUPANT LOAD FACTOR

100 OCCUPANT LOAD FACTOR

300 OCCUPANT LOAD FACTOR

S1 OCCUPANCY

1 HOUR RATED WALL

2 HOUR RATED WALL

REQUIRED ADA CLEARANCE

FIRE EXTINGUISHER FE

COMMON PATH OF EGRESS (CPE) CPE
TRAVEL DISTANCE (TD) TD

2-HR EXIT DISCHARGE PER 1027.1 EXCEPTION 1

1-HR RATED COLUMN WRAP. UL-Y715
SEE SHEET GF004.

1-HR RATED BEAM WRAP. UL-N782
SEE SHEET GF001.

2-HR RATED COLUMN WRAP. UL-Y715
SEE SHEET GF004

2-HR RATED BEAM WRAP. UL-N782
SEE SHEET GF001

CRSA

649 E. South Temple
Salt Lake City, UT 84102
801.355.5915

MWL

11798 N. Lakeridge Pkwy.
Ashland, VA 23005
804-228-7473

State of Utah
Department of Administrative Services

Division of Facilities Construction & Management
4110 State Office Building
Salt Lake City, Utah 84114
Phone: (801) 538 - 3018
Fax: (801) 538 - 3267

DIVISION OF FACILITIES CONSTRUCTION AND MANAGEMENT
REVIEWED FOR CODE COMPLIANCE
SIGNATURE: Ernie Gallegos
DATE: 08-05-2014

STATE OF UTAH #134096 MEHRDAD SAMIE LICENSED ARCHITECT
04-28-2014
ARCHITECT-ENGINEER STAMP

Unified State Laboratory Module 2

4451 South 2700 West, Taylorsville, UT 84118

DFCM #: 13020300

Project #: B13-024

DATE:	ISSUE TYPE:
APRIL 21, 2014	BID SET
CHECKED BY	J. NIELSEN
DRAWN BY	F. PITORE

CENTRAL PLANT ADDITION CODE PLAN

GI007

VOLUME 1

C:\Users\fernando\Documents_A_13024_Modli_2013_fernando.rvt
7/14/2014 11:14:14 PM

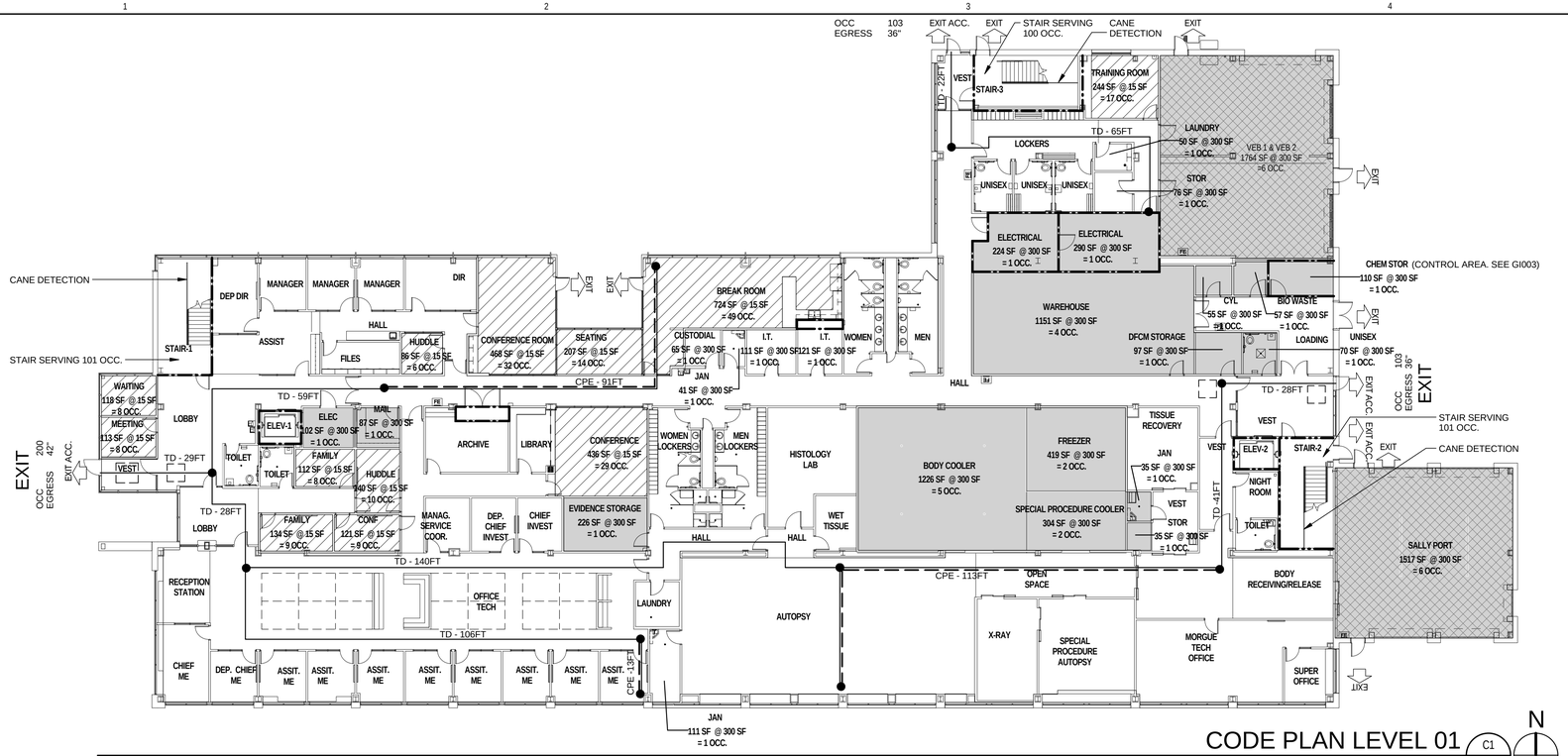

CODE PLAN LEVEL 01

1/16" = 1'-0" C1 GI008

N

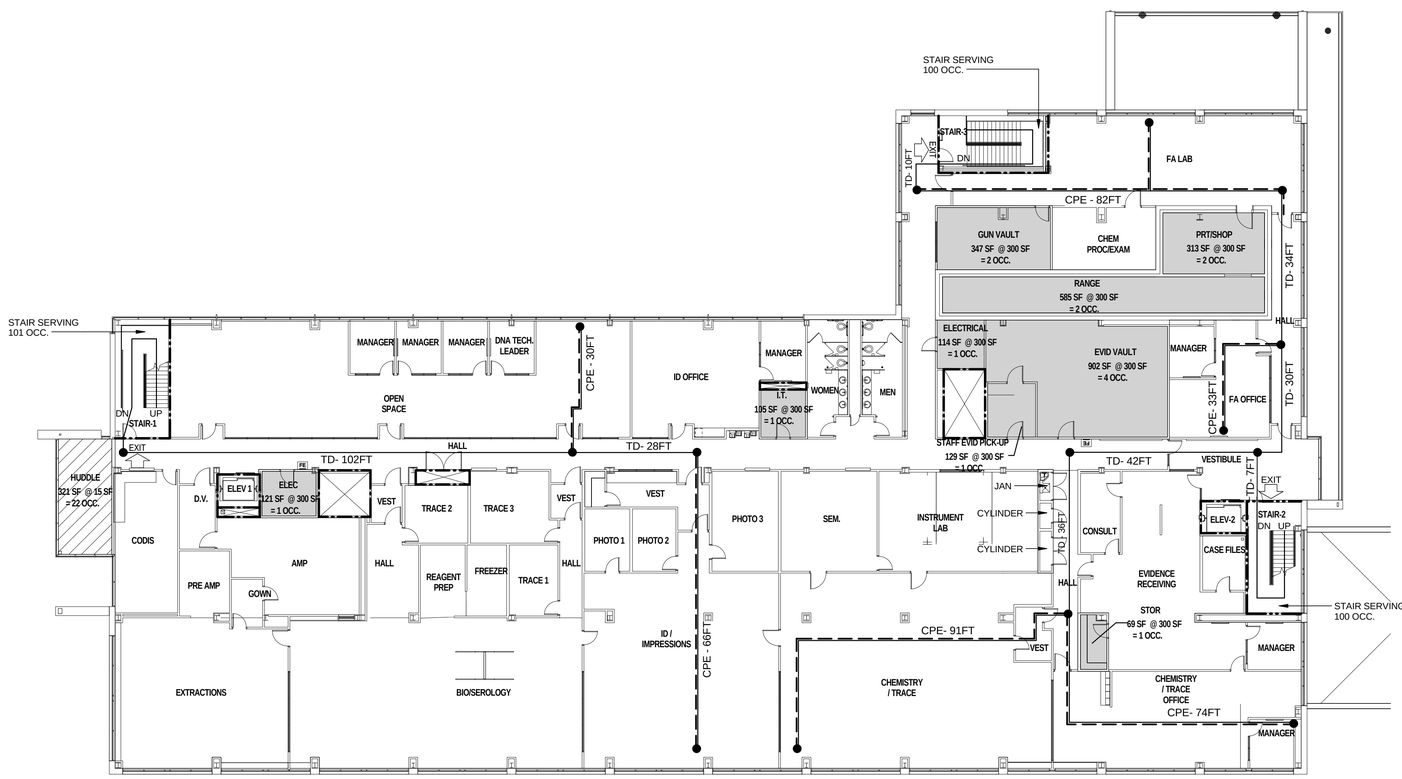

CODE PLAN LEVEL 02

1/16" = 1'-0" A1 GI008

N

CALCULATIONS

TOTAL SQUARE FOOTAGE LEVEL 1 — 32, 980 SF

OCCUPANCY

BUSINESS AREAS @ 100	188
ACCESSORY STORAGE, MECHANICAL @ 300	42
ASSEMBLY UNCONCENTRATED @ 15	171
TOTAL LEVEL 1 OCC	401

EGRESS WIDTH

DOOR EGRESS WIDTH	80.2" REQUIRED
	108" PROVIDED

PLUMBING

WATER CLOSET	16 PROVIDED
LAVATORIES	16 PROVIDED
DRINKING FOUNTAINS	4 PROVIDED

TOTAL SQUARE FOOTAGE LEVEL 2 — 31,922 SF

OCCUPANCY

BUSINESS AREAS @ 100	262
ACCESSORY STORAGE, MECHANICAL @ 300	17
ASSEMBLY UNCONCENTRATED @ 15	22
TOTAL LEVEL 2 OCC	301

EGRESS WIDTH

DOOR EGRESS WIDTH	60.2" REQUIRED
	108" PROVIDED

PLUMBING

WATER CLOSET	6 PROVIDED
LAVATORIES	6 PROVIDED
DRINKING FOUNTAINS	4 PROVIDED

GRAPHIC LEGEND

- 15 OCCUPANT LOAD FACTOR
- 100 OCCUPANT LOAD FACTOR
- 300 OCCUPANT LOAD FACTOR
- S1 OCCUPANCY
- 1 HOUR RATED WALL
- 2 HOUR RATED WALL
- REQUIRED ADA CLEARANCE
- FIRE EXTINGUISHER — FE
- COMMON PATH OF EGRESS (CPE) / TRAVEL DISTANCE (TD) — CPE / TD
- 2-HR EXIT DISCHARGE PER 1027.1 EXCEPTION 1

CRSA
649 E. South Temple
Salt Lake City, UT 84102
801.355.5915

MWL
11798 N. Lakeridge Pkwy.
Ashland, VA 23005
804-228-7473

State of Utah
Department of Administrative Services
Division of Facilities Construction & Management
4110 State Office Building
Salt Lake City, Utah 84114
Phone: (801) 538 - 3018
Fax: (801) 538 - 3267

DIVISION OF FACILITIES CONSTRUCTION AND MANAGEMENT
REVIEWED FOR CODE COMPLIANCE
SIGNATURE: Ernie Gelfe
DATE: 08-05-2014

STATE OF UTAH #134096 MEHRDAD SAMIE LICENSED ARCHITECT
04-28-2014
ARCHITECT-ENGINEER STAMP

Unified State Laboratory Module 2

4451 South 2700 West, Taylorsville, UT 84118

DFCM #: 13020300

Project #: B13-024

DATE:	ISSUE TYPE:
APRIL 21, 2014	BID SET

CHECKED BY	J. NIELSEN
DRAWN BY	F. PITORE

LEVEL 1 & 2 CODE PLAN

GI008

VOLUME 1

C:\Users\fernando\Documents_A_13024_Modil_2013_fernando.rvt
7/14/2014 1:14:38 PM

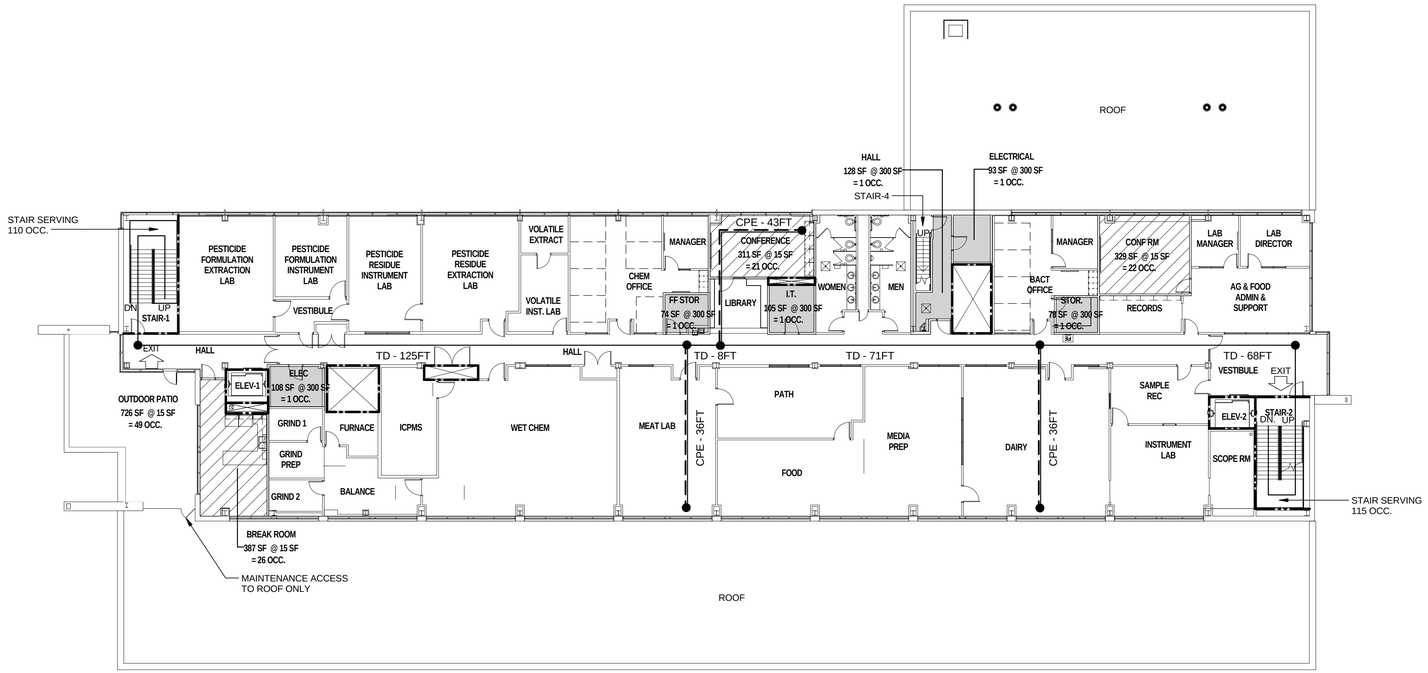

CODE PLAN LEVEL 03

1/16" = 1'-0" (C1 / GI009)

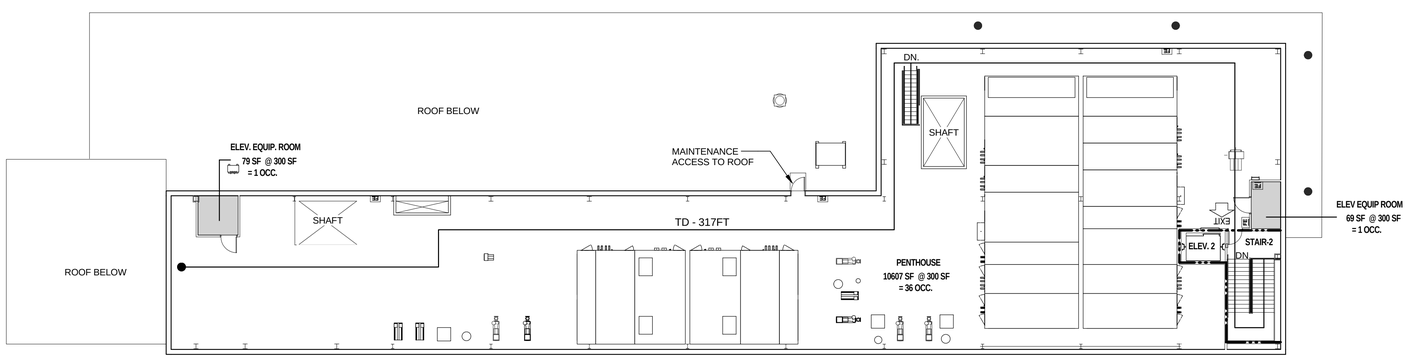

CODE PLAN PENTHOUSE LEVEL

1/16" = 1'-0" (A1 / GI009)

CALCULATIONS

TOTAL SQUARE FOOTAGE LEVEL 3	18,032 SF
OCCUPANCY	
BUSINESS AREAS @ 100	146
ACCESSORY STORAGE, MECHANICAL @ 300	6
ASSEMBLY UNCONCENTRATED @ 15	73
TOTAL LEVEL 3 OCC	225
EGRESS WIDTH	
DOOR EGRESS WIDTH	45" REQUIRED
	72" PROVIDED
PLUMBING	
WATER CLOSET	6 PROVIDED
LAVATORIES	6 PROVIDED
DRINKING FOUNTAINS	4 PROVIDED

TOTAL SQUARE FOOTAGE PENTHOUSE	11,890 SF
OCCUPANCY	
ACCESSORY STORAGE, MECHANICAL @ 300	36
TOTAL PENTHOUSE LEVEL OCC	36
EGRESS WIDTH	
DOOR EGRESS WIDTH	7.2" REQUIRED
	36" PROVIDED

GRAPHIC LEGEND

15 OCCUPANT LOAD FACTOR	
100 OCCUPANT LOAD FACTOR	
300 OCCUPANT LOAD FACTOR	
S1 OCCUPANCY	
1 HOUR RATED WALL	
2 HOUR RATED WALL	
REQUIRED ADA CLEARANCE	
FIRE EXTINGUISHER	FE
COMMON PATH OF EGRESS (CPE) TRAVEL DISTANCE (TD)	CPE / TD
2-HR EXIT DISCHARGE PER 1027.1 EXCEPTION 1	

CRSA
649 E. South Temple
Salt Lake City, UT 84102
801.355.5915

MWL
11798 N. Lakeridge Pkwy.
Ashland, VA 23005
804-228-7473

State of Utah
Department of Administrative Services
Division of Facilities Construction & Management
4110 State Office Building
Salt Lake City, Utah 84114
Phone: (801) 538 - 3018
Fax: (801) 538 - 3267

DIVISION OF FACILITIES CONSTRUCTION AND MANAGEMENT
REVIEWED FOR CODE COMPLIANCE
SIGNATURE: Ernie Gelfe
DATE: 08-05-2014

STATE OF UTAH
#134098
MEHRDAD SAMIE
LICENSED ARCHITECT
04.28.2014
ARCHITECT-ENGINEER STAMP

Unified State Laboratory Module 2

4451 South 2700 West,
Taylorsville, UT 84118

DFCM #: 13020300

Project #: B13-024

DATE:	ISSUE TYPE:
APRIL 21, 2014	BID SET

CHECKED BY	J. NIELSEN
DRAWN BY	F. PITORE

LEVEL 3 & PENTHOUSE CODE PLAN

GI009

VOLUME 1

C:\Users\fernando\Documents_A_13024_Modli_2013_fernando.rvt
7/14/2014 1:14:54 PM

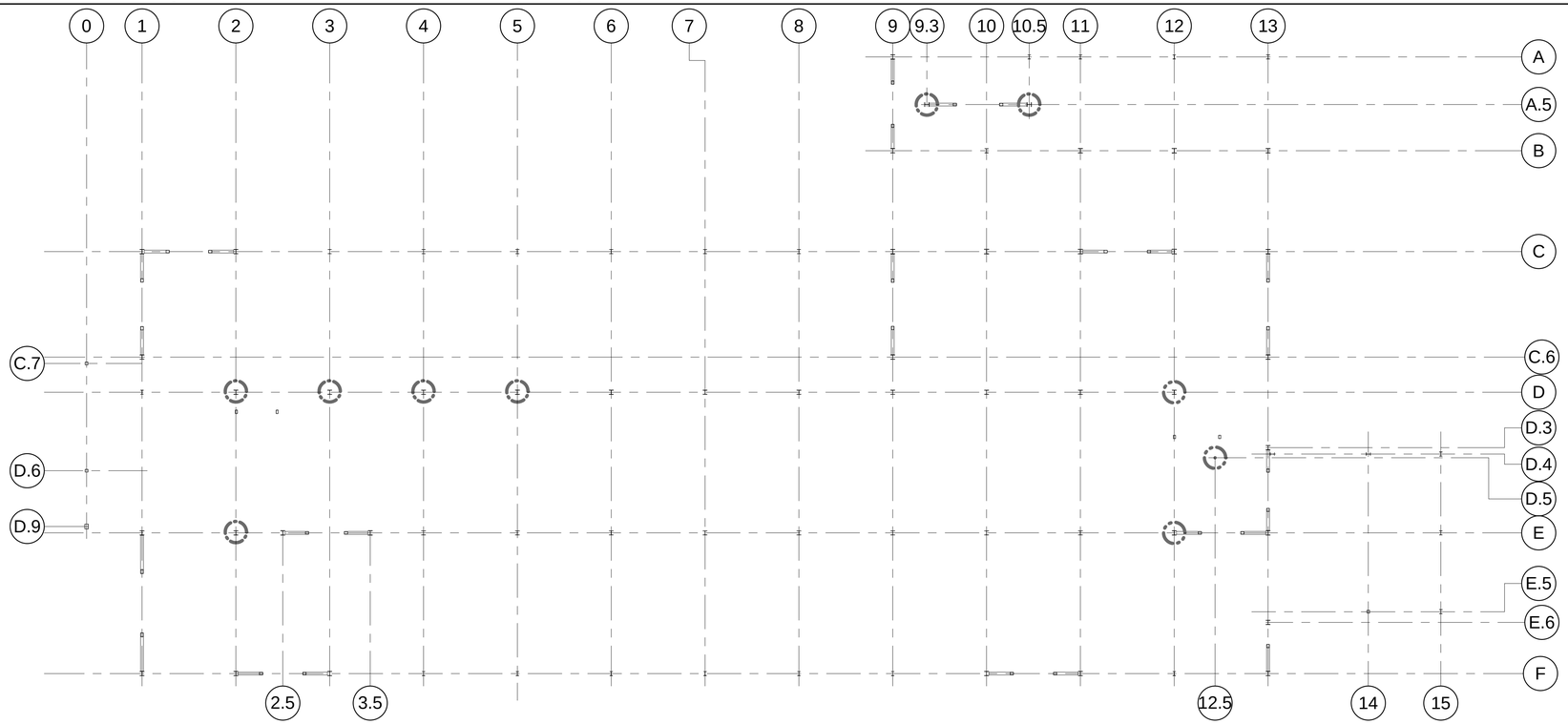

FIRE RATING PLAN LEVEL 01 (C5 / GI010)

1/16" = 1'-0"

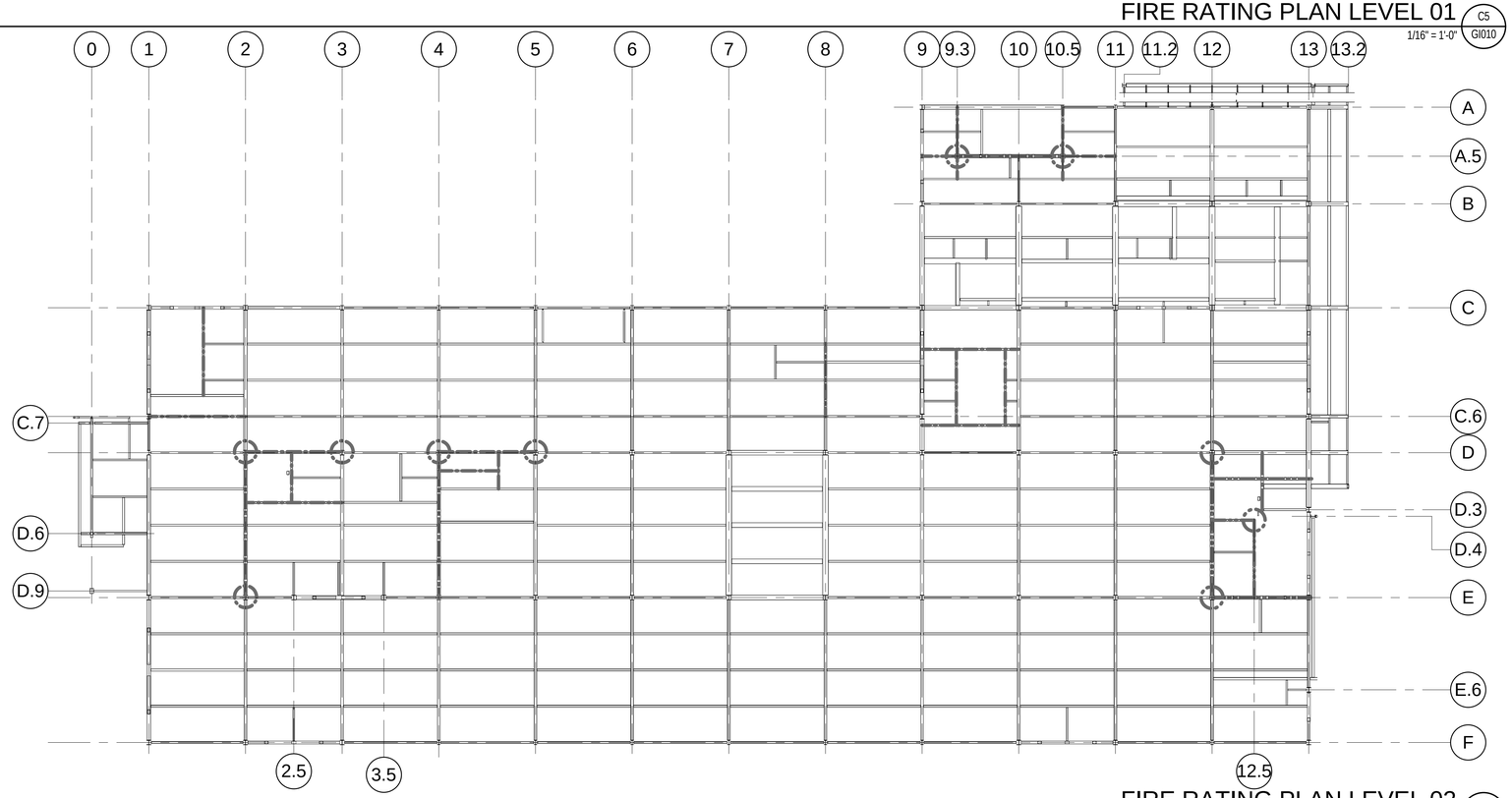

FIRE RATING PLAN LEVEL 02 (A5 / GI010)

1/16" = 1'-0"

GRAPHIC LEGEND

1-HR RATED COLUMN WRAP. UL-Y715
SEE SHEET GF004.

1-HR RATED BEAM WRAP. UL-N782
SEE SHEET GF001.

2-HR RATED COLUMN WRAP. UL-Y715
SEE SHEET GF004

2-HR RATED BEAM WRAP. UL-N782
SEE SHEET GF001

CRSA

649 E. South Temple
Salt Lake City, UT 84102
801.355.5915

MWL

11798 N. Lakeridge Pkwy.
Ashland, VA 23005
804-228-7473

State of Utah
Department of Administrative Services

Division of Facilities Construction & Management
4110 State Office Building
Salt Lake City, Utah 84114
Phone: (801) 538 - 3018
Fax: (801) 538 - 3267

DIVISION OF FACILITIES CONSTRUCTION AND MANAGEMENT
REVIEWED FOR CODE COMPLIANCE
SIGNATURE: Ernie Gelfe
DATE: 08-05-2014

STATE OF UTAH
#134096
MEHRDAD SAMII
LICENSED ARCHITECT

04-28-2014

ARCHITECT-ENGINEER STAMP

Unified State Laboratory Module 2

4451 South 2700 West,
Taylorsville, UT 84118

DFCM #: 13020300

Project #: B13-024

DATE:	ISSUE TYPE:
APRIL 21, 2014	BID SET
CHECKED BY	J. NIELSEN
DRAWN BY	F. PITORE

LEVEL 1&2 FIRE RATING PLAN

GI010

VOLUME 1

C:\Users\fernando\Documents_A_13024_Modil_2013_fernando.rvt
7/14/2014 1:15:03 PM

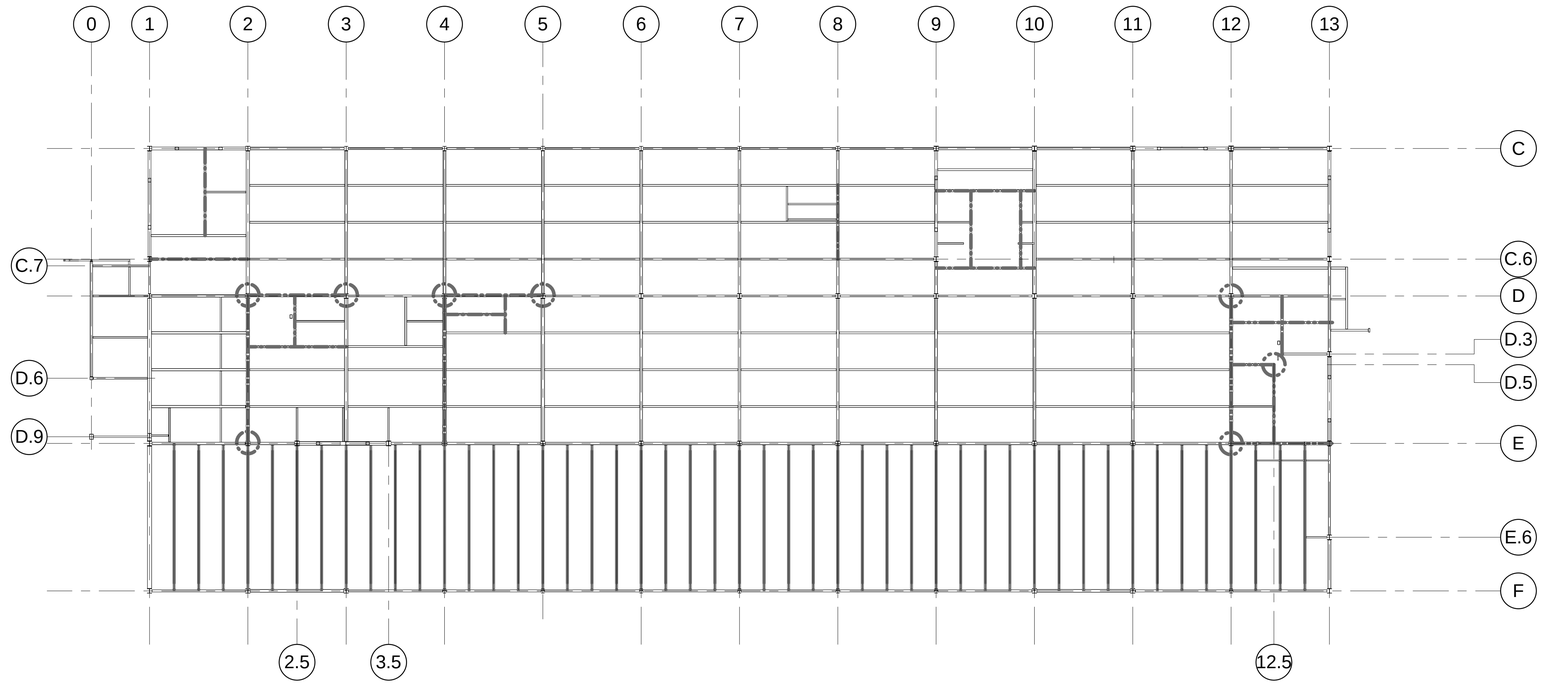

FIRE RATING PLAN LEVEL 03

1/16" = 1'-0"

C5
GI011

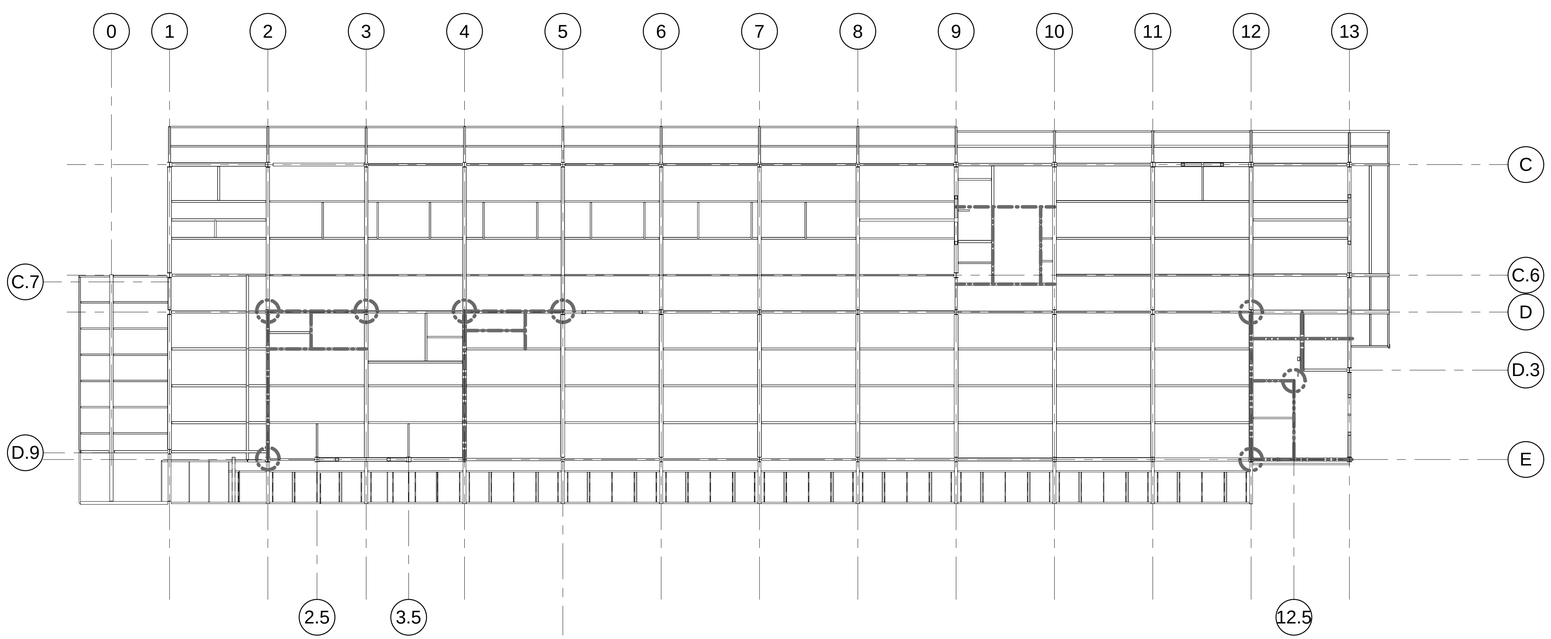

FIRE RATING PLAN PENTHOUSE LEVEL

1/16" = 1'-0"

A5
GI011

GRAPHIC LEGEND

1-HR RATED COLUMN WRAP. UL-Y715
SEE SHEET GF004.

1-HR RATED BEAM WRAP. UL-N782
SEE SHEET GF001.

2-HR RATED COLUMN WRAP. UL-Y715
SEE SHEET GF004

2-HR RATED BEAM WRAP. UL-N782
SEE SHEET GF001

CRSA

649 E. South Temple
Salt Lake City, UT 84102
801.355.5915

MWL

11798 N. Lakeridge Pkwy.
Ashland, VA 23005
804-228-7473

State of Utah
Department of Administrative Services
Division of Facilities Construction & Management
4110 State Office Building
Salt Lake City, Utah 84114
Phone: (801) 538 - 3018
Fax: (801) 538 - 3267

DIVISION OF FACILITIES CONSTRUCTION AND MANAGEMENT
REVIEWED FOR CODE COMPLIANCE
SIGNATURE:
DATE: 08-05-2014

STATE OF UTAH
#134096
MEHRDAD SAMIE
LICENSED ARCHITECT

04-28-2014

ARCHITECT-ENGINEER STAMP

Unified State Laboratory Module 2

4451 South 2700 West,
Taylorsville, UT 84118

DFCM #:	13020300
Project #:	B13-024

DATE:	ISSUE TYPE:
APRIL 21, 2014	BID SET

CHECKED BY	J. NIELSEN
DRAWN BY	F. PITORE

LEVEL 3 & PENTHOUSE FIRE RATING PLAN

GI011

VOLUME 1

C:\Users\fernando\Documents_A_13024_Modl_2013_fernando.rvt
7/14/2014 1:15:11 PM

Design No. N782

April 19, 2001

Restrained Beam Ratings — 1, 1-1/2, 2, 3 and 4 Hr
Unrestrained Beam Ratings — 1, 1-1/2, 2, 3 and 4 Hr

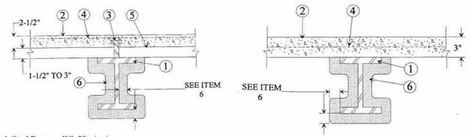

1. **Steel Beam** — W8x28 min size.
2. **Normal Weight or Lightweight Concrete** — Compressive strength, 3000 psi. For normal weight concrete either carbonate or siliceous aggregate may be used. Unit weight, 148 pcf. For lightweight concrete unit weight 110 pcf.
3. **Shear Connector** — (Optional) — Studs, 3/4 in. diam headed type or equivalent per AISC specifications. Welded to the top flange of beam through the steel floor units.
4. **Welded Wire Fabric** — (Optional) — 6x6-10/10 SWG.
5. **Steel Floor and Form Units*** — 1-5/16 in. deep corrugated units; or 1-1/2 to 3 in. deep fluted units welded to beam.
6. **Spray-Applied Fire Resistive Materials*** — Applied by mixing with water and spraying in more than one coat to the beam to the final thicknesses shown below. When fluted or corrugated steel floor units are used, crest areas shall be filled with Spray-Applied Fire Resistive Materials above the beam. Beam surfaces must be clean and free of dirt, loose scale and oil. Min average and min ind. density of 15/14 pcf respectively. Min avg and min ind density of 22/19 pcf respectively for Types Z-106, Z-106/G. Min average and min ind. density of 40/36 pcf respectively for Type Z-146. For method of density determination, see Design Information Section.

The thicknesses of Spray-Applied Fire Resistive Materials shown in the table below are applicable when the beams are supporting solid concrete slabs or floor assemblies containing only fluted floor or form units with lightweight concrete.

	Min Thkns In.	
Rating Hr	Restrained Beam Rating Hr	Unrestrained Beam Rating Hr
1	7/16	7/16
1-1/2	7/16	3/4
2	11/16	1
3	1-3/16	1-5/16
4	1-5/8	1-5/8

The thickness of Spray-Applied Fire Resistive Materials shown in the table below are only applicable when the beams are supporting solid, normal weight, concrete slabs or floor assemblies containing only fluted floor or form units, topped with normal weight concrete.

	Min Thkns In.	
Rating Hr	Restrained Beam Rating Hr	Unrestrained Beam Rating Hr
1	3/8	3/8
1-1/2	3/8	5/8
2	9/16	7/8
3	1	1-7/16
4	1-7/16	2

The thickness of Spray-Applied Fire Resistive Materials shown in the table below are applicable when the thickness applied to the beams' lower flange edges is reduced by one-half and the beams are supporting solid concrete slabs or floor assemblies containing only fluted floor or form units with lightweight concrete.

	Min Thkns In.	
Rating Hr	Restrained Beam Rating Hr	Unrestrained Beam Rating Hr
1	7/16+	7/16+
1-1/2	7/16+	3/4
2	11/16	1
3	1-3/16	1-7/16
4	1-11/16	1-15/16

+ — Thickness applied to beams' lower flange edges shall be a min of 1/4 in.

The thickness of Spray-Applied Fire Resistive Materials shown in the table below are applicable when the thickness applied to the beams' lower flange edges is reduced by one-half and the beams are supporting solid concrete slabs or floor assemblies containing only fluted floor or form units with normal weight concrete.

	Min Thkns In.	
Rating Hr	Restrained Beam Rating Hr	Unrestrained Beam Rating Hr
1	7/16+	7/16+
1-1/2	7/16+	3/4
2	11/16	1-1/16
3	1-3/16	1-11/16
4	1-11/16	2-5/16

+ — Thickness applied to beams' lower flange edges shall be a min of 1/4 in.

ARABIAN VERMICULITE INDUSTRIES — Types MK-6/CBF, MK-6/ED, MK-6/HY, MK-6/HY Extended Set , MK-6s, Sonotex 1, Sonotex 5, Z-106, Z-106/G, Z-146 investigated for exterior use, Sonotex 35.

W R GRACE & CO - CONN
CONSTRUCTION PRODUCTS DIV — Types MK-6/HY, MK-6/HY Extended Set , MK-6s, RG Monokote Acoustic 1, Monokote Acoustic 5 , Z-106, Z-106/G, Z-146 investigated for exterior use, Monokote Acoustic 35.

GRACE KOREA INC — Types MK-6/CBF, MK-6/ED, MK-6/HY, MK-6/HY Extended Set , MK-6s Monokote Acoustic 1, Monokote Acoustic 5 , Z-106, Z-106/G, Z-146 investigated for exterior use, Monokote Acoustic 35. .

*Bearing the UL Classification Mark

Design No. S721
BXUV.S721
Fire Resistance Ratings - ANSI/UL 263

Page Bottom

Design/System/Construction/Assembly Usage Disclaimer

- Authorities Having Jurisdiction should be consulted in all cases as to the particular requirements covering the installation and use of UL Listed or Classified products, equipment, system, devices, and materials.
- Authorities Having Jurisdiction should be consulted before construction.
- Fire resistance assemblies and products are developed by the design submitter and have been investigated by UL for compliance with applicable requirements. The published information cannot always address every construction nuance encountered in the field.
- When field issues arise, it is recommended the first contact for assistance be the technical service staff provided by the product manufacturer noted for the design. Users fire resistance assemblies are advised to consult the general Guide Information for each product category and each group of assemblies. The Guide Information includes specifics concerning alternate materials and alternate methods of construction.
- Only products which bear UL's Mark are considered as Classified, Listed, or Recognized.

Fire Resistance Ratings - ANSI/UL 263

See General Information for Fire Resistance Ratings - ANSI/UL 263

Design No. S721

August 28, 2012

Restrained Beam Ratings — 1, 1-1/2, 2, 3 or 4 Hr (See Item 6)

Unrestrained Beam Ratings — 1, 1-1/2, 2, 3 or 4 Hr (See Item 6)

Restricted Load Condition — See Item 1

Load Restricted for Canadian Applications — See Guide BXUVZ

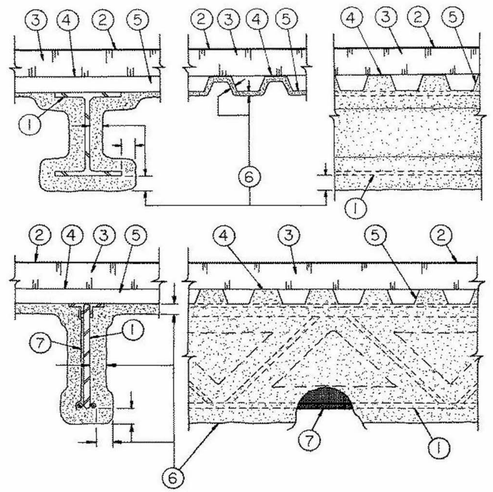

1. **Steel Supports —** W6x16 min size steel beam, 10K1, 12K3 or 14K1 min size steel joists. Note: When 10K1 or 12K1 joists are used, they will be limited to a max tensile stress of 26,000 psi.

2. **Roof Covering* —** Consisting of hot mopped, cold application or single-ply materials, compatible with insulation(s) described herein which provide Class A, B or C coverings. See Roofing Materials and Systems Directory-Roof Covering Materials (TEVT).

3. **Roof Insulation* —** Consisting of building units, foamed plastic or mineral and fiber boards, applied in one or more layers. When multiple layers are used, end and side joints shall be offset a min of 12 in. in both directions in order to lap all joints. See category for names of companies providing Classified products — Building Units (BZXX), Foamed Plastic (CCVW) or Mineral and Fiber Boards (CERZ). Roof insulation shall be compatible with roof covering materials Class A, B or C system. See Roofing Materials and Systems Directory-Roof Covering Materials (TEVT).

4. **Adhesive —** (Optional) — May be applied to steel roof deck units or between insulation layers at a max application rate of 0.4 gal per 100 sq ft. See **Adhesives** (BYWR) category for names of manufacturers.

5. **Steel Roof Deck —** (Unclassified) — Fluted, No. 22 MSG min galv 1-1/2 in. deep with 3-1/2 in. wide flutes spaced 6 in. OC. Ends overlapped a min 1-1/2 in. and welded to supports, 12 in. OC max. Adjacent units button-punched, welded or fastened with No. 12 by 1/2 in. long self-drilling, self-tapping steel screws.

6. **Spray-Applied Fire Resistive Materials* —** Applied by mixing with water and spraying to the beam (or joist) and deck surfaces in one or more coats to the final min thicknesses shown below. Crest areas above the beam (or joist) shall be filled with the Spray-Applied Fire Resistive Materials. Surfaces must be clean and free of dirt, loose scale and oil. Min average and min individual density of 15 and 14 pcf, respectively. For method of density determination see Design Information Section.

Minimum Spray-Applied Fire Resistive Materials Thickness, In.

	Unrestrained Beam Rating Hr			Restrained Beam Rating Hr			
		Joists			Joists		
Rating Hr	Beam W6x16	(a)	(b)	Beam W6x16	(a)	(b)	Steel Roof Deck
1	7/16	3/4	3/4	7/16	3/4	3/4	13/16
1-1/2	9/16	15/16	1-3/16	7/16	3/4	1-1/16	15/16
2	13/16	1-3/16	1-7/16	11/16	1-1/8	1-5/16	1-7/16
3	1-1/4	1-13/16	2-5/16	1-3/16	1-13/16	2-1/8	1-7/8
4	1-1/2	—	—	1-1/2	—	—	1-7/16

(a) Metal lath or nonmetallic fabric mesh secured to one side of open web joist. Spray-Applied Fire Resistive Materials thickness applied to each side of lath or mesh shall be equal to thickness required on steel joist.

(b) Spray-Applied Fire Resistive Materials directly applied to joist contours. As an alternate, metal lath or nonmetallic fabric mesh secured to one side of joist to catch overspray when spraying following joist contours. Metal lath to be fully covered with Spray-Applied Fire Resistive Materials but with no min thickness requirements.

As an alternate to the thickness shown above for the steel beam, the thicknesses shown in the following table are applicable when the thickness applied to the beam's lower flange edges is reduced by one-half. The min thickness applied to the lower flange edges is 1/4 in.

Minimum Spray-Applied Fire Resistive Materials Thickness, In.

Rating Hr	Unrestrained Beam Rating Hr	Restrained Beam Rating Hr
1	1/2	1/2
1-1/2	11/16	9/16
2	15/16	13/16
3	1-7/16	1-3/8
4	1-13/16	1-13/16

BERLIN CO LTD — Types 300, 300ES, 300N or SB.

ISOLATEK INTERNATIONAL — Types 300, 300AC, 300ES, 300HS, 300N, or SB.

LUCKY CORE INSULATING MATERIALS MANUFACTURING L L C — Types 300, 300ES, 300N, or SB.

NEWKEM PRODUCTS CORP — Types 300, 300ES, 300N, or SB.

6A. **(As an alternate to Item 6) Spray-Applied Fire Resistive Materials* —** Applied by mixing with water and spraying to the beam (or joist) and deck surfaces in one or more coats to the final min thicknesses shown below. Crest areas above the beam (or joist) shall be filled with the Spray-Applied Fire Resistive Materials. Surfaces must be clean and free of dirt, loose scale and oil. Min average and min individual density of 17.5 and 16 pcf, respectively, for Type 300TW. Min average and min individual density of 22 and 19 pcf, respectively, for Type 400. For method of density determination see Design Information Section.

Minimum Spray-Applied Fire Resistive Materials Thickness, In.

	Unrestrained Beam Rating Hr			Restrained Beam Rating Hr			
		Joists			Joists		
Rating Hr	Beam W6x16	(a)	(b)	Beam W6x16	(a)	(b)	Steel Roof Deck
1	7/16	3/4	3/4	7/16	3/4	3/4	13/16
1-1/2	9/16	15/16	1-3/16	7/16	3/4	1-1/16	15/16
2	13/16	1-3/16	1-7/16	11/16	1-1/8	1-5/16	1-7/16
3	1-1/4	1-13/16	2-5/16	1-3/16	1-13/16	2-1/8	1-7/8
4	1-1/2	—	—	1-1/2	—	—	1-7/16

(a) Metal lath or nonmetallic fabric mesh secured to one side of open web joist. Spray-Applied Fire Resistive Materials thickness applied to each side of lath or mesh shall be equal to thickness required on steel joist.

(b) Spray-Applied Fire Resistive Materials directly applied to joist contours. As an alternate, metal lath or nonmetallic fabric mesh secured to one side of joist to catch overspray when spraying following joist contours. Metal lath to be fully covered with Spray-Applied Fire Resistive Materials but with no min thickness requirements.

As an alternate to the thickness shown above for the steel beam, the thicknesses shown in the following table are applicable when the thickness applied to the beam's lower flange edges is reduced by one-half. The min thickness applied to the lower flange edges is 1/4 in.

Minimum Spray-Applied Fire Resistive Materials Thickness, In.

Rating Hr	Unrestrained Beam Rating Hr	Restrained Beam Rating Hr

Design No. U415
BXUV.U415
Fire-resistance Ratings - ANSI/UL 263

Page Bottom

Design/System/Construction/Assembly Usage Disclaimer

- Authorities Having Jurisdiction should be consulted in all cases as to the particular requirements covering the installation and use of UL Listed or Classified equipment, system, devices, and materials.
- Authorities Having Jurisdiction should be consulted before construction.
- Fire resistance assemblies and products are developed by the design submitter and have been investigated by UL for compliance with applicable requirem published information cannot always address every construction nuance encountered in the field.
- When field issues arise, it is recommended the first contact for assistance be the technical service staff provided by the product manufacturer noted for th fire resistance assemblies are advised to consult the general Guide Information for each product category and each group of assemblies. The Guide Inforr specifics concerning alternate materials and alternate methods of construction.
- Only products which bear UL's Mark are considered as Classified, Listed, or Recognized.

Fire-resistance Ratings - ANSI/UL 263

See General Information for Fire-resistance Ratings - ANSI/UL 263

Design No. U415

March 18, 2013

Nonbearing Wall Ratings — 1, 2, 3 or 4 Hr

System A – 1 Hr.

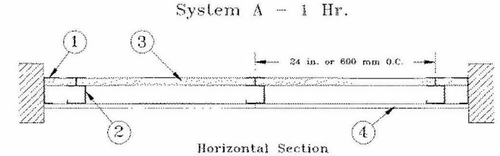

Horizontal Section

System B – 2 Hr.

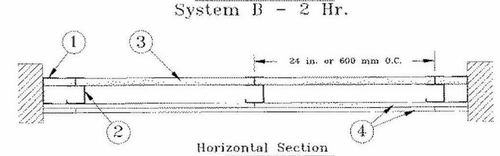

Horizontal Section

System C – 2 Hr.

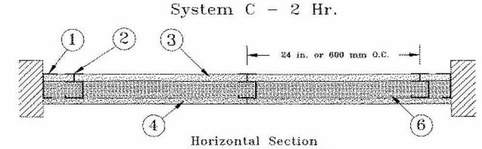

Horizontal Section

System D – 2 Hr.

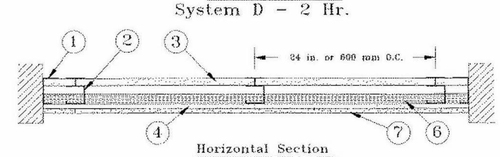

Horizontal Section

CRSA
649 E. South Temple
Salt Lake City, UT 84102
801.355.5915

MWL
11798 N. Lakeridge Pkwy.
Ashland, VA 23005
804-228-7473

State of Utah
Department of Administrative Services
Division of Facilities Construction & Management
4110 State Office Building
Salt Lake City, Utah 84114
Phone: (801) 538 - 3018
Fax: (801) 538 - 3267

DIVISION OF FACILITIES CONSTRUCTION AND MANAGEMENT
REVIEWED FOR CODE COMPLIANCE
SIGNATURE: Ernie Calle
DATE: 08-05-2014

STATE OF UTAH #134096 MEHRDAD SAMIE LICENSED ARCHITECT
04-28-2014
ARCHITECT-ENGINEER STAMP

Unified State Laboratory Module 2
4451 South 2700 West, Taylorsville, UT 84118

DFCM #:	13020300
Project #:	B13-024
DATE:	ISSUE TYPE:
APRIL 21, 2014	BID SET
CHECKED BY	J. NIELSEN
DRAWN BY	F. PITORE

UL DETAILS

GF001
VOLUME 1

C:\Users\fernando\Documents_A_13024_Modli_2013_fernando.rvt
7/14/2014 11:11:09 PM

System E - 2 Hr.

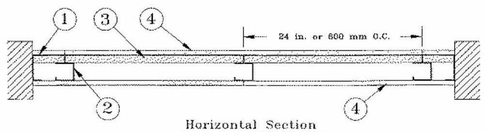

Horizontal Section

System F - 2 Hr.

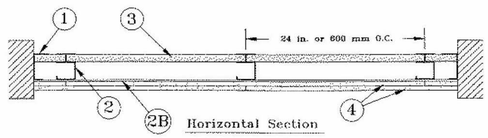

Horizontal Section

System G - 3 Hr.

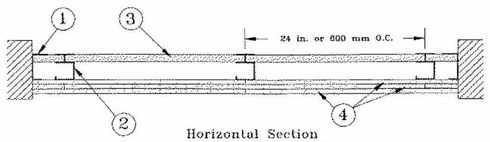

Horizontal Section

System H - 3 Hr.

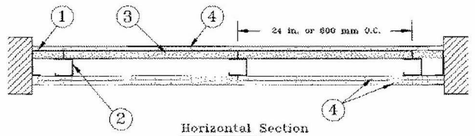

Horizontal Section

System I - 4 Hr.

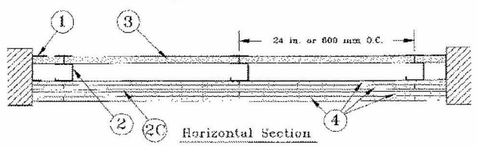

Horizontal Section

1. **Floor, Side and Ceiling Runners —** "J" - shaped runner, min 2-1/2 in. deep (min 4 in. deep when System C is used), with unequal legs of 1 in in., fabricated from min 24 MSG (min 20 MSG when Item 4A, 4B or 7 are used) galv steel. Runners positioned with short leg toward finished side o Runners attached to structural supports with steel fasteners located not greater than 2 in. from ends and not greater than 24 in. OC. "E" - shaped (Item 2A) may be used as side runners in place of "J" - shaped runners.

2. **Steel Studs —** "C-H" - shaped studs, min 2-1/2 in. deep (min 4 in. deep when System C is used), fabricated from min 25 MSG (min 20 MSG wh 2D, 4A, 4B or 7 is used) galv steel. Cut to lengths 3/8 to 1/2 in. less than floor-to-ceiling height and spaced 24 in. or 600 mm OC.

2A. **Steel Studs —** (Not Shown) — "E" - shaped studs installed back to back in place of "C-H" - shaped studs (Item 2) "E" - shaped studs secured with steel screws spaced a maximum 12 in. OC. Fabricated from min 25 MSG (min 20 MSG when Item 2D, 4A, 4B or 7 is used) galv steel, min 2-1, deep (min 4 in. deep when System C is used), with one leg 1 in. long and two legs 3/4 in. long. Shorter legs 1 in. apart to engage gypsum liner pa to lengths 3/8 to 1/2 in. less than floor to ceiling heights.

2B. **Furring Channels —** (Optional, not shown) — For use with single or double layer systems. Resilient furring channels fabricated from min 25M corrosion protected steel, installed horizontally, and spaced vertically a max 24 in. OC. Flange portion of channel attached to each intersecting "C-H stud on side of stud opposite the 1 in. liner panels with 1/2 in. long Type S or S-12 pan-head steel screws. When furring channels are used, wallbo installed vertically only. Not to be used with Type FRX-G gypsum wallboard, Type RB-LBG (Item 4A), Type Nelco (Item 4B) or cementitious backer (Item 7).

2C. **Furring Channels —** For use with System I - "Hat" - shaped, 25 MSG galv steel furring channels attached directly over the inner layers of wal each stud with 2 in. long Type S pan head steel screws. Screws alternate from top flange to bottom flange at each stud intersection. Furring chann spaced vertically max 24 in. OC.

2D. **Steel Framing Members* —** (Optional, not shown) — For use with single or double layer systems. Furring channels and Steel Framing Members as described below. Not to be used with Type FRX-G gypsum wallboard, Type RB-LBG (Item 4A), Type Nelco (Item 4B) or cementitious backer units (Item 7):

a. **Furring Channels —** Formed of No. 25 MSG galv steel. 2-9/16 in. or 2-23/32 in. wide by 7/8 in. deep, spaced max. 24 in. OC perpendicular to studs. Channels secured to studs as described in Item b. Gypsum board installed vertically only and attached to furring channels as described in Item 3.

b. **Steel Framing Members* —** Used to attach furring channels (Item 2Da) to studs (Item 2 or 2A). Clips spaced max. 24 in. OC., and secured to studs with No. 8 x 1-1/2 in. minimum self-drilling, S-12 steel screw through the center grommet. Furring channels are friction fitted into clips. RSIC-1 clip for use with 2-9/16 in. wide furring channels. RSIC-1 (2.75) clip for use with 2-23/32 in. wide furring channels.

PAC INTERNATIONAL INC — Types RSIC-1, RSIC-1 (2.75).

3. **Gypsum Board* —** Gypsum liner panels, nom 1 in. thick, 24 in. or 600 mm (for metric spacing) wide. Panels cut 1 in. less in length than floor to ceiling height. Vertical edges inserted in "H" portion of "C-H" studs or the gap between the two 3/4 in. legs of the "E" studs. Free edge of end panels attached to long leg of vertical "J" - runners with 1-5/8 in. long Type S steel screws spaced not greater than 12 in. OC. When wall height exceeds liner panel length, liner panel may be butted to extend to the full height of the wall. Horizontal joints need not be backed by steel framing. In System I, butt joints in liner panels are staggered min 36 in. Butt joints backed with 6 in. by 22 in. strips of 3/4 in. thick gypsum wallboard (Item 4). Wallboard strips centered over butt joints and secured to liner panels with six 1-1/2 in. long Type G steel screws, three screws along the 22 in. dimension at the top and bottom of the strips.

CGC INC — Type SLX

UNITED STATES GYPSUM CO — Type SLX

USG MEXICO S A DE C V — Type SLX

4. **Gypsum Board* —**

System A - 1 Hr

Gypsum panels, with beveled, square or tapered edges, nom 5/8 in. thick, 48 in. or 1200 mm wide, applied vertically or horizontally, attached to studs with 1 in. long Type S steel screws spaced 12 in. when installed vertically or 8 in OC when installed horizontally. Horizontal joints need not be backed by steel framing.

CGC INC — Types AR, C, IP-AR, IP-X1, IP-X2, IPC-AR, SCX, SHX, ULX, WRC, WRX

UNITED STATES GYPSUM CO — Types AR, C, FRX-G, IP-AR, IP-X1, IP-X2, IPC-AR, SCX, SGX, SHX, ULX, WRC, WRX, USGX.

USG MEXICO S A DE C V — Types AR, C, IP-AR, IP-X1, IP-X2, IPC-AR, SCX, SHX, ULX, WRC, WRX

System B - 2 Hr

Gypsum panels, with beveled, square or tapered edges, nom 1/2 in. or 5/8 in. thick, 48 in. or 1200 mm wide, applied vertically or horizontally in two layers. Inner or base layer attached to studs with 1 in. long Type S steel screws spaced 24 in. OC when installed vertically or 16 in. OC when installed horizontally. Outer or face layer attached to studs with 1-5/8 in. long Type S steel screws spaced 12 in. OC when installed vertically and staggered 12 in. from base layer screws or 8 in. OC when installed horizontally and staggered 8 in. from base layer screws. Horizontal joints between inner and outer layers staggered a min of 12 in. Horizontal joints need not be backed by steel framing. Vertical joints centered over studs and staggered 24 in.

CGC INC — 1/2 in. Type C, IP-X2, IPC-AR or WRC; 5/8 in. Types AR, C, IP-AR, IP-X1, IP-X2, IPC-AR, SCX, SHX, ULX, WRC, WRX

UNITED STATES GYPSUM CO — 1/2 in. Types C, IP-X2, IPC-AR, or WRC; 5/8 in. Types AR, C, FRX-G, IP-AR, IP-X1, IP-X2, IPC-AR, SCX, SGX, SHX, ULX, USGX, WRC, WRX

USG MEXICO S A DE C V — 1/2 in. Types C, IP-X2, IPC-AR or WRC; 5/8 in. Types AR, C, IP-AR, IP-X1, IP-X2, IPC-AR, SCX, SHX, ULX, WRC, WRX

System C - 2 Hr

Gypsum panels, with beveled, square or tapered edges, nom 3/4 in. thick, 48 in. or 1200 mm wide, applied vertically or horizontally, secured with 1-1/4 in. long Type S steel screws spaced 8 in. OC along vertical edges and 12 in. OC in the field when installed vertically or 8 in. OC along the vertical edges and in the field when installed horizontally. Horizontal joints need not be backed by steel framing. Screws along side joints offset 4 in. Requires min 4 in. deep framing per Items 1, 2 and 3. Requires min 3 in. thick mineral wool batts per Item 6.

CGC INC — Types IP-X3, or ULTRACODE

UNITED STATES GYPSUM CO — Types IP-X3, or ULTRACODE

USG MEXICO S A DE C V — Types IP-X3, or ULTRACODE

System D - 2 Hr

Gypsum panels, with beveled, square or tapered edges, nom 5/8 in. thick, 48 in. or 1200 mm wide, applied vertically or horizontally, attached directly to studs with 1 in. long Type S steel screws spaced 24 in. when installed vertically or 16 in. OC when installed horizontally. . Horizontal joints need not be backed by steel framing. Requires face layer of 1/2 or 5/8 in. thick cementitious backer units per Item 7 and min 1-1/2 in. thick mineral wool batts per Item 6.

CGC INC — Types AR, C, IP-AR, IP-X1, IP-X2, IPC-AR, SCX, SHX, ULX, WRC, WRX

UNITED STATES GYPSUM CO — Types AR, C, FRX-G, IP-AR, IP-X1, IP-X2, IPC-AR, SCX, SGX, SHX, ULX, USGX, WRC, WRX.

USG MEXICO S A DE C V — Types AR, C, IP-AR, IP-X1, IP-X2, IPC-AR, SCX, SHX, ULX, WRC, WRX

System E - 2 Hr

Gypsum panels, with beveled, square or tapered edges, nom 1/2 in. or 5/8 in. thick, 48 in. or 1200 mm wide, applied vertically or horizontally, attached to studs with 1 in. long Type S steel screws spaced 12 in. OC when installed vertically or 8 in. when installed horizontally. Horizontal joints need not be backed by steel framing.

CGC INC — 1/2 in. Types C, IP-X2, IPC-AR; 5/8 in. Types AR, C, IP-AR, IP-X1, IP-X2, IPC-AR, SCX, SHX, ULX, WRC, WRX

UNITED STATES GYPSUM CO — 1/2 in. Types C, IP-X2, IPC-AR; 5/8 in. Types AR, C, FRX-G, IP-AR, IP-X1, IP-X2, IPC-AR, SCX, SGX, SHX, ULX, USGX, WRC, WRX.

USG MEXICO S A DE C V — 1/2 in. Types C, IP-X2, IPC-AR; 5/8 in. Types AR, C, IP-AR, IP-X1, IP-X2, IPC-AR, SCX, SHX, ULX, WRC, WRX

System F - 2 Hr

Gypsum panels, with beveled, square or tapered edges, nom 1/2 in. or 5/8 in. thick, 48 in. or 1200 mm wide, applied vertically in two layers. Inner or base layer attached to resilient furring channels (Item 2B) with 1 in. long Type S steel screws spaced 24 in. Outer or face layer attached to resilient furring channels (Item 2B) with 1-5/8 in. long Type S steel screws spaced 12 in. OC and staggered 12 in. from base layer screws. Joints between inner and outer layers staggered 24 in.

CGC INC — 1/2 in. Type C, IP-X2, IPC-AR or WRC; 5/8 in. Types AR, C, FRX-G, IP-AR, IP-X1, IP-X2, IPC-AR, SCX, SHX, ULX, WRC, WRX

UNITED STATES GYPSUM CO — 1/2 in. Type C, IP-X2, IPC-AR or WRC; 5/8 in. Types AR, C, FRX-G, IP-AR, IP-X1, IP-X2, IPC-AR, SCX, SGX, SHX, ULX, USGX, WRC, WRX.

USG MEXICO S A DE C V — 1/2 in. Type C, IP-X2, IPC-AR or WRC; 5/8 in. Types AR, C, IP-AR, IP-X1, IP-X2, IPC-AR, SCX, SHX, ULX, WRC, WRX

System G - 3 Hr

Gypsum panels, with beveled, square or tapered edges, nom 5/8 in. thick, 48 in. or 1200 mm wide, applied vertically or horizontally in three layers. Inner or base layer attached to studs with 1 in. long Type S steel screws spaced 24 in. OC when installed vertically or 16 in OC when installed horizontally. Middle layer attached to studs with 1-5/8 in. long Type S steel screws spaced 24 in. when installed vertically or 16 in. OC when installed horizontally. Outer or face layer attached to studs with 2-1/4 in. long Type S steel screws spaced 16 in. when installed vertically or 12 in. OC when installed horizontally. Screws offset 6 in. from layer below. Horizontal joints on adjacent layers staggered a min of 12 in. . Horizontal joints need not be backed by steel framing. Vertical joints centered over studs and staggered 24 in. on adjacent layers.

CGC INC — Types C, IP-X2, IPC-AR, WRC

UNITED STATES GYPSUM CO — Types C, IP-X2, IPC-AR, WRC

USG MEXICO S A DE C V — Types C, IP-X2, IPC-AR, WRC

System H - 3 Hr

Gypsum panels, with beveled, square or tapered edges, nom 5/8 in. thick, 48 in. or 1200 mm wide, applied vertically or horizontally, two layers over the flange of the "C" section of the studs, one layer over the flange of the "H" section of the studs. Inner or base layer attached to studs with 1 in. long Type S steel screws spaced 24 in. OC when installed vertically or 16 in. OC when installed horizontally. Face layer attached to studs with 1-5/8 in. long Type S steel screws spaced 16 in. when installed vertically or 12 in. OC when installed horizontally. Screws offset 6 in. from layer below. Horizontal joints on adjacent layers staggered a min of 12 in. Horizontal joints need not be backed by steel framing. Vertical joints centered over studs and staggered 24 in. on adjacent layers.

CGC INC — Types C, IP-X2, IPC-AR, WRC

UNITED STATES GYPSUM CO — Types C, IP-X2, IPC-AR, WRC

USG MEXICO S A DE C V — Types C, IP-X2, IPC-AR, WRC

System I - 4 Hr

Gypsum panels, with beveled, square or tapered edges, nom 3/4 in. thick, 4 ft wide (or 1200 mm for metric spacing) wallboard with square or tapered edges. Total of four layers to be used. First and second (inner) layers applied vertically or horizontally over the steel studs. Horizontal joints need not be backed by steel framing. When applied vertically, joints centered over studs and staggered min 24 in., otherwise all joints staggered min 12 in. First layer secured to studs with 1-1/4 in. long Type S self-drilling, self-tapping bugle-head steel screws spaced 24 in. OC. Second layer secured to studs with 2-1/4 in. long Type S self-drilling, self-tapping bugle-head steel screws spaced 12 in. OC. Third layer applied vertically over the furring channels (Item 2C) with a 1-1/4 in. long Type S self-drilling, self-tapping bugle-head steel screws spaced 12 in. OC. Fourth layer applied vertically or horizontally with 2-1/4 in. long Type S self-drilling, self-tapping bugle-head steel screws spaced 12 in. OC. When applied vertically, joints to be staggered min 24 in. from third layer, otherwise all joints staggered min 12 in.

CGC INC — Types IP-X3, or ULTRACODE

UNITED STATES GYPSUM CO — Types IP-X3, or ULTRACODE

USG MEXICO S A DE C V — Types IP-X3, or ULTRACODE

4A. **Gypsum Board* —** (As an alternate to Item 4 Systems A, B, C, D, E, G, H, and I when used as the base layer, For direct attachment only) - Nom 5/8 in. or ¾ in. thick lead backed gypsum panels with beveled, square or tapered edges, applied vertically. Vertical joints centered over 20 MSG steel studs and staggered min 1 stud cavity on opposite sides of studs. See Items 1, 2, 2A, 2B and 2D. Wallboard secured to studs with 1-1/4 in. long Type S-12 steel screws spaced 8 in. OC at perimeter and 12 in. OC in the field. For Joint Compound see Item 5. To be used with Lead Batten Strips (see Item 9) or Lead Discs or Tabs (see Item 10).

RAY-BAR ENGINEERING CORP — Type RB-LBG

4B. **Gypsum Board* —** (As an alternate to Item 4 Systems A, B, C, D, E, G, H, and I when used as the base layer, For direct attachment only) - Nominal 5/8 in. thick lead backed gypsum panels with beveled, square or tapered edges, applied vertically. Vertical joints centered over studs and staggered min 1 stud cavity on opposite sides of studs. Wallboard secured to studs with 1-1/4 in. long Type S-12 (or #6 by 1-1/4 in. long bugle head fine driller) steel screws spaced 8 in. OC at perimeter and 12 in. OC in the field.

NEW ENGLAND LEAD BURNING CO INC, DBA NELCO — Nelco

4C. **Gypsum Board* —** (As an alternate to Item 4 Systems A, B, C, D, E, G, H, and I when used as the base layer, For direct attachment only) - Nom 5/8 or 3/4 in. thick lead backed gypsum panels with beveled, square or tapered edges, applied vertically. Vertical joints centered over 20 MSG steel studs and staggered min 1 stud cavity on opposite sides of studs. See Items 1, 2, 2A, 2B and 2D. Wallboard secured to studs with 1-1/4 in. long Type S-12 steel screws spaced 8 in. OC at perimeter and 12 in. OC in the field. For Joint Compound see Item 5. To be used with Lead Batten Strips (see Item 9A) or Lead Discs (see Item 10A). Lead batten strips required behind vertical joints of lead backed gypsum wallboard and optional at remaining stud locations. Lead batten strips, min 2 in. wide, max 10 ft long with a max thickness of 0.140 in. placed on the face of studs and attached to the stud with two 1 in. long Type S-8 pan head steel screws, one at the top of the strip and one at the bottom of the strip.

MAYCO INDUSTRIES INC — Type X-Ray Shielded Gypsum

4D. **Gypsum Board* —** (As an alternate to Item 4 Systems A, B, C, D, E, G, H, and I when used as the base layer, For direct attachment only). Nom 5/8 in. thick lead backed gypsum panels with beveled, square or tapered edges, applied vertically. Vertical joints centered over studs and staggered min 1 stud cavity on opposite sides of studs. Wallboard secured to studs with 1-1/4 in. long Type S-12 steel screws gypsum panel steel screws spaced 8 in. OC at perimeter and 12 in. OC in the field. Lead batten strips required behind vertical joints of lead backed gypsum wallboard and optional at remaining stud locations. Lead batten strips, min 2 in. wide, max 8 ft long with a max thickness of 0.14 in. placed on the face of studs and attached to the stud with construction adhesive and two 1 in. long Type S-12 pan head steel screws, one at the top of the strip and one at the bottom of the strip. Lead discs, nominal 3/8 in. diam by max 0.085 in. thick. Compression fitted or adhered over the screw heads. Lead batten strips and discs to have a purity of 99.9% meeting the Federal specification QQ-L-201f, Grade "C".

RADIATION PROTECTION PRODUCTS INC — Type RPP - Lead Lined Drywall

5. **Joint Tape and Compound —** (Not Shown)

Systems A, B, C, E, F, G, H, I

Joints on outer layers of gypsum boards (Item 4 and 4A) covered with paper tape and joint compound. Paper tape and joint compound may be omitted when gypsum boards are supplied with square edges. Exposed screw heads covered with joint compound.

6. **Batts and Blankets* —**

Systems A, B, E, F, G, H, I

(Optional) — Mineral wool or glass fiber batts partially or completely filling stud cavity. Any mineral wool or glass fiber batt mineral bearing the UL Classification Marking as to Fire Resistance.

Systems C & D

Min 3 in. (System C) and min 1-1/2 in. (System D) thick mineral wool batts, friction fitted between the studs and floor and ceiling runners.

THERMAFIBER INC — Type SAFB

7. **Cementitious Backer Units* —** (System D) — Nom 1/2 or 5/8 in. thick panels, square edge, attached to studs over gypsum wallboard with 1-5/8 in. long, Type S-12, corrosion resistant steel screws spaced 8 in. OC and staggered 8 in. from gypsum wall board screws. Joints covered with glass fiber mesh tape. Vertical joints staggered one stud cavity from gypsum wallboard joints. Horizontal joints staggered a min of 12 in. from the gypsum wallboard joints.

UNITED STATES GYPSUM CO — Type DCB

8. **Laminating Adhesive* —** (Optional, Not Shown) — Used to bond outer layer of Cementitious Backer Units (Item 7) to inner layers of Gypsum Board (Item 4) in System D. ANSI A136.1 Type 1 organic adhesive applied with 1/4 in. square notched trowel. See Adhesives (BYWR) in the Fire Resistance Directory or Adhesives (BJLZ) in the Building Materials Directory for names of Classified companies.

9. **Lead Batten Strips —** (Not Shown, For Use With Item 4A) - Lead batten strips, min 1-1/2 in. wide, max 10 ft long with a max thickness of 0.125 in. Strips placed on the interior face of studs and attached from the exterior face of the stud with two 1 in. long Type S-12 pan head steel screws, one at the top of the strip and one at the bottom of the strip. Lead batten strips to have a purity of 99.9% meeting the Federal specification QQ-L-201f, Grade "C". Lead batten strips required behind vertical joints of lead backed gypsum wallboard (Item 4A) and optional at remaining stud locations. Required behind vertical joints.

9A. **Lead Batten Strips —** (Not Shown, for use with Item 4C) Lead batten strips, 2 in. wide, max 10 ft long with a max thickness of 0.140 in. Strips placed on the face of studs and attached to the stud with two min. 1 in. long min. Type S-8 pan head steel screws, one at the top of the strip and one at the bottom of the strip or with one min. 1 in. long min. Type S-8 pan head steel screw at the top of the strip. Lead batten strips to have a purity of 99.9% meeting the Federal specification QQ-L-201f, Grades "A, B, C or D". . Lead batten strips required behind vertical joints of lead backed gypsum wallboard (Item 6) and optional at remaining stud locations.

10. **Lead Discs or Tabs —** (Not Shown, For Use With Item 4A) - Used in lieu of or in addition to the lead batten strips (Item 9) or optional at other locations - Max 3/4 in. diam by max 0.125 in. thick lead discs compression fitted or adhered over steel screw heads or max 1/2 in. by 1-1/4 in. by max 0.125 in. thick lead tabs placed on gypsum boards (Item 4A) underneath screw locations prior to the installation of the screws. Lead discs or tabs to have a purity of 99.9% meeting the Federal specification QQ-L-201f, Grade "C".

10A. **Lead Discs —** (Not Shown, for use with Item 4C) Max 5/16 in. diam by max 0.140 in. thick lead discs compression fitted or adhered over steel screw heads. Lead discs to have a purity of 99.9% meeting the Federal Specification QQ-L-201f, Grades "A, B, C or D".

11. **Lead Batten Strips —** (Not Shown, For Use With Item 4B) Lead batten strips, 2 in. wide, max 10 ft long with a max thickness of 0.142 in. Strips placed on the face of studs and attached to the stud with two min. 1 in. long min. Type S-8 pan head steel screws, one at the top of the strip and one at the bottom of the strip or with one min. 1 in. long min. Type S-8 pan head steel screw at the top of the strip. Lead batten strips to have a purity of 99.9% meeting the Federal specification QQ-L-201f, Grade "C". Lead batten strips required behind vertical joints of lead backed gypsum wallboard (Item 4B) and optional at remaining stud locations.

12. **Lead Tabs —** (Not Shown, For Use With Item 4B) 2 in. wide, 5 in. long with a max thickness of 0.142 in. Tabs friction-fit around front face of stud, the stud folded back flange, and the back face of the stud. Tabs required at each location where a screw (that secures the gypsum boards, Item 4B) will penetrate the steel stud. Lead tabs to have a purity of 99.9% meeting the Federal specification QQ-L-201f, Grade "C". Lead tabs may be held in place with standard adhesive tape if necessary.

g the UL Classification Mark

CRSA

649 E. South Temple
Salt Lake City, UT 84102
801.355.5915

MWL

11798 N. Lakeridge Pkwy.
Ashland, VA 23005
804-228-7473

State of Utah
Department of Administrative Services

Division of Facilities Construction & Management
4110 State Office Building
Salt Lake City, Utah 84114
Phone: (801) 538 - 3018
Fax: (801) 538 - 3267

DIVISION OF FACILITIES CONSTRUCTION AND MANAGEMENT
REVIEWED FOR CODE COMPLIANCE
SIGNATURE: Ernie Calle
DATE: 08-05-2014

STATE OF UTAH
#134098
MEHRDAD SAMIE
LICENSED ARCHITECT
08-28-2014
ARCHITECT-ENGINEER STAMP

Unified State Laboratory Module 2

4451 South 2700 West,
Taylorsville, UT 84118

DFCM #: 13020300

Project #: B13-024

DATE:	ISSUE TYPE:
APRIL 21, 2014	BID SET
CHECKED BY	J. NIELSEN
DRAWN BY	F. PITORE

UL DETAILS

GF002

VOLUME 1

C:\Users\fernando\Documents_A_13024_Modil_2013_fernando.rvt
7/14/2014 11:11:16 PM

Last Updated on 2013-03-18

Questions? | Print this page | Terms of Use | Page Top

© 2013 UL LLC

When the UL Leaf Mark is on the product, or when the word "Environment" is included in the UL Mark, please search the UL Environment database for additional information regarding this product's certification.

The appearance of a company's name or product in this database does not in itself assure that products so identified have been manufactured under UL's Follow-Up Service. Only those products bearing the UL Mark should be considered to be Listed and covered under UL's Follow-Up Service. Always look for the Mark on the product.

UL permits the reproduction of the material contained in the Online Certification Directory subject to the following conditions: 1. The Guide Information, Designs and/or Listings (files) must be presented in their entirety and in a non-misleading manner, without any manipulation of the data (or drawings). 2. The statement "Reprinted from the Online Certifications Directory with permission from UL" must appear adjacent to the extracted material. In addition, the reprinted material must include a copyright notice in the following format: "© 2013 UL LLC".

Design No. U419
BXUV.U419
Fire-resistance Ratings - ANSI/UL 263

Page Bottom

Design/System/Construction/Assembly Usage Disclaimer

- Authorities Having Jurisdiction should be consulted in all cases as to the particular requirements covering the installation and use of UL Listed or Classified products, equipment, system, devices, and materials.
- Authorities Having Jurisdiction should be consulted before construction.
- Fire resistance assemblies and products are developed by the design submitter and have been investigated by UL for compliance with applicable requirements. The published information cannot always address every construction nuance encountered in the field.
- When field issues arise, it is recommended the first contact for assistance be the technical service staff provided by the product manufacturer noted for the design. Users of fire resistance assemblies are advised to consult the general Guide Information for each product category and each group of assemblies. The Guide Information includes specifics concerning alternate materials and alternate methods of construction.
- Only products which bear UL's Mark are considered as Classified, Listed, or Recognized.

Fire-resistance Ratings - ANSI/UL 263

See General Information for Fire-resistance Ratings - ANSI/UL 263

Design No. U419

April 09, 2013

Nonbearing Wall Ratings — 1, 2, 3 or 4 Hr (See Items 4 & 5)

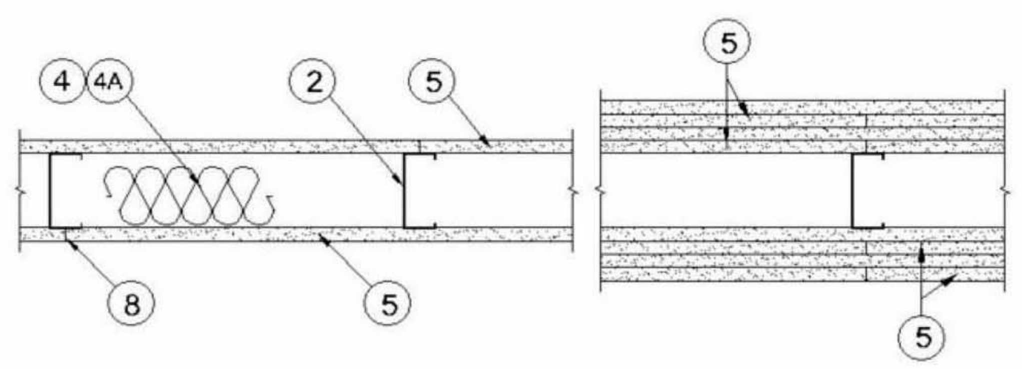

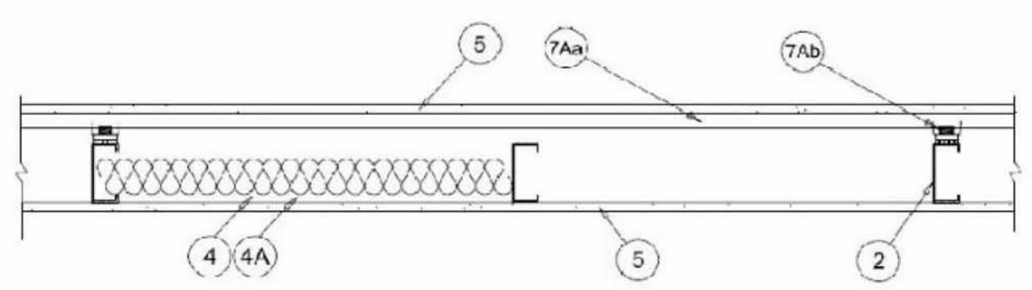

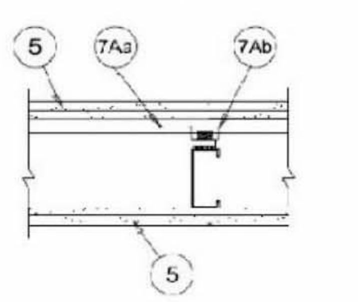

1. **Floor and Ceiling Runners —** (Not shown) — For use with Item 2 - Channel shaped, fabricated from min 25 MSG corrosion-protected steel, min depth to accommodate stud size, with min 1-1/4 in. long legs, attached to floor and ceiling with fasteners 24 in. OC max.

1A. **Framing Members* - Floor and Ceiling Runner —** Not shown - In lieu of Item 1 — For use with Item 2B, proprietary channel shaped runners, 3-5/8 in. deep attached to floor and ceiling with fasteners 24 in. OC max.

CALIFORNIA EXPANDED METAL PRODUCTS CO — Viper25™ Track

CRACO MFG INC — SmartTrack™

MARINO/WARE, DIV OF WARE INDUSTRIES INC — Viper25™ Track

PHILLIPS MFG CO L L C — Viper25™ Track

1B. **Framing Members* - Floor and Ceiling Runner —** Not shown - In lieu of Item 1 — For use with Item 2C, proprietary channel shaped runners, 1-1/4 in. wide by 3-5/8 in. deep fabricated from min 0.020 in. thick galv steel, attached to floor and ceiling with fasteners spaced 24 in. OC max.

CALIFORNIA EXPANDED METAL PRODUCTS CO — Viper20™ Track

MARINO/WARE, DIV OF WARE INDUSTRIES INC — Viper20™ Track

PHILLIPS MFG CO L L C — Viper20™ Track

1C. **Framing Members*— Floor and Ceiling Runners —** (Not shown) — In lieu of Item 1 - Channel shaped, attached to floor and ceiling with fasteners 24 in. OC. max.

ALLSTEEL & GYPSUM PRODUCTS INC — Type SUPREME Framing System

CONSOLIDATED FABRICATORS CORP, BUILDING PRODUCTS DIV — Type SUPREME Framing System

QUAIL RUN BUILDING MATERIALS INC — Type SUPREME Framing System

SCAFCO STEEL STUD MANUFACTURING CO — Type SUPREME Framing System

STEEL CONSTRUCTION SYSTEMS INC — Type SUPREME Framing System

UNITED METAL PRODUCTS INC — Type SUPREME Framing System

1D. **Floor and Ceiling Runners —** (Not shown)—For use with Item 2A- Channel shaped, fabricated from min 20 MSG corrosion-protected or galv steel, min depth to accommodate stud size, with min 1 in. long legs, attached to floor and ceiling with fasteners spaced max 24 in. OC.

1E. **Framing Members*— Floor and Ceiling Runners —** (Not shown, As an alternate to Item 1) — For use with Items 2E, 5F or 5G or 5I only, channel shaped, fabricated from min. 0.015 in. (min bare metal thickness) galvanized steel, attached to floor and ceiling with fasteners 24 in. OC. max.

CLARKDIETRICH BUILDING SYSTEMS — CD ProTRAK

DMFCWBS L L C — ProTRAK

MBA BUILDING SUPPLIES — ProTRAK

RAM SALES L L C — Ram ProTRAK

SOUTHEASTERN STUD & COMPONENTS INC — ProTRAK

STEEL STRUCTURAL SYSTEMS L L C — Tri-S ProTRAK

1F. **Framing Members* - Floor and Ceiling Runner —** Not shown - In lieu of Item 1 — For use with Item 2F, proprietary channel shaped runners, minimum width to accommodate stud size, with 1- 1/8 in. long legs fabricated from min 0.015 in. (min bare metal thickness) galv steel, attached to floor and ceiling with fasteners spaced 24 in. OC max.

SUPER STUD BUILDING PRODUCTS — The Edge

1G. **Framing Members* - Floor and Ceiling Runner —** For use with Item 2G, proprietary channel shaped runners, minimum width to accommodate stud size attached to floor and ceiling with fasteners 24 in. OC max.

STUDCO BUILDING SYSTEMS — CROCSTUD Track

1H. **Floor and Ceiling Runners —** (Not shown) — Channel shaped, fabricated from min 0.02 in. galv steel, min width to accommodate stud size, with min 1 in. long legs, for use with studs specified below and fabricated from min 0.02 in. galv steel or thicker, attached to floor and ceiling with fasteners spaced max 24 in. OC.

MARINO/WARE, DIV OF WARE INDUSTRIES INC — Viper20™ Track VT100.

1I. **Framing Members*— Floor and Ceiling Runners —** (Not shown, As an alternate to Item 1) — For use with Items 2H, channel shaped, fabricated from min. 0.015 in. (min bare metal thickness) galvanized steel, attached to floor and ceiling with fasteners 24 in. OC. max.

TELLING INDUSTRIES L L C — TRUE-TRACK™

1J. **Framing Members* - Floor and Ceiling Runner —** Not shown - In lieu of Item 1 — For use with Item 2I, proprietary channel shaped runners, 3-5/8 in. deep attached to floor and ceiling with fasteners 24 in. OC max.

TELLING INDUSTRIES L L C — Viper25™ Track

1K. **Framing Members* - Floor and Ceiling Runner —** Not shown - In lieu of Item 1 — For use with Item 2J, proprietary channel shaped runners, 1-1/4 in. wide by 3-5/8 in. deep fabricated from min 0.020 in. thick galv steel, attached to floor and ceiling with fasteners spaced 24 in. OC max.

TELLING INDUSTRIES L L C — Viper20™ Track

2. **Steel Studs —** Channel shaped, fabricated from min 25 MSG corrosion-protected steel, min depth as indicated under Item 5, spaced a max of 24 in. OC. Studs to be cut 3/8 to 3/4 in. less than assembly height.

2A. **Steel Studs —** (As an alternate to Item 2, For use with Items 5B, 5E, 5H and 5J) Channel shaped, fabricated from min 20 MSG corrosion-protected or galv steel, 3-1/2 in. min depth, spaced a max of 16 in. OC. Studs friction-fit into floor and ceiling runners. Studs to be cut 5/8 to 3/4 in. less than assembly height.

2B. **Framing Members* - Steel Studs —** (As an alternate to Item 2, For use with Items 5C or 5I) - Proprietary channel shaped studs, 3-5/8 in. deep spaced a max of 24 in. OC. Studs to be cut 3/4 in less than the assembly height and installed with a ½ in. gap between the end of the stud and track at the bottom of the wall. For direct attachment of gypsum board only.

CALIFORNIA EXPANDED METAL PRODUCTS CO — Viper25™

CRACO MFG INC — SmartStud™

MARINO/WARE, DIV OF WARE INDUSTRIES INC — Viper25™

PHILLIPS MFG CO L L C — Viper25™

2C. **Framing Members* - Steel Studs —** Not shown - In lieu of Item 2 — proprietary channel shaped steel studs, min depth as indicated under Item 5, spaced a max if 24 in. OC, fabricated from min 0.020 in. thick galv steel. Studs cut 3/8 in. to 3/4 in. less in lengths than assembly heights.

CALIFORNIA EXPANDED METAL PRODUCTS CO — Viper20™

MARINO/WARE, DIV OF WARE INDUSTRIES INC — Viper20™

PHILLIPS MFG CO L L C — Viper20™

2D. **Framing Members*— Steel Studs —** In lieu of Item 2 - Channel shaped studs, min depth as indicated under Item 5, spaced a max of 24 in. OC. Studs to be cut 3/4 in. less than assembly height.

ALLSTEEL & GYPSUM PRODUCTS INC — Type SUPREME Framing System

CONSOLIDATED FABRICATORS CORP, BUILDING PRODUCTS DIV — Type SUPREME Framing System

QUAIL RUN BUILDING MATERIALS INC — Type SUPREME Framing System

SCAFCO STEEL STUD MANUFACTURING CO — Type SUPREME Framing System

STEEL CONSTRUCTION SYSTEMS INC — Type SUPREME Framing System

UNITED METAL PRODUCTS INC — Type SUPREME Framing System

2E. **Framing Members*— Steel Studs —** (Not shown, As an alternate to Item 2) —For use with Items 5F or 5G or 5I only, channel shaped studs, min depth as indicated under Item 5F, 5G or 5I, fabricated from min. 0.015 in. (min bare metal thickness) galvanized steel, spaced a max of 24 in. OC. Studs to be cut 3/4 in. less than assembly height.

CLARKDIETRICH BUILDING SYSTEMS — CD ProSTUD

DMFCWBS L L C — ProSTUD

MBA BUILDING SUPPLIES — ProSTUD

RAM SALES L L C — Ram ProSTUD

SOUTHEASTERN STUD & COMPONENTS INC — ProSTUD

STEEL STRUCTURAL SYSTEMS L L C — Tri-S ProSTUD

2F. **Framing Members* - Steel Studs —** Not shown - In lieu of Item 2 — proprietary channel shaped steel studs, minimum width indicated under Item 5, 1-1/4 in. deep fabricated from min 0.015 in. (min bare metal thickness) galvanized steel. Studs 3/8 in. to 3/4 in. less in lengths than assembly heights.

SUPER STUD BUILDING PRODUCTS — The Edge

2G. **Framing Members* - Steel Studs —** Not shown - In lieu of Item 2 - proprietary channel shaped studs, minimum width indicated under Item 5, Studs to be cut 3/8 to 3/4 in less than the assembly height.

STUDCO BUILDING SYSTEMS — CROCSTUD

2H. **Framing Members*— Steel Studs —** (Not shown, As an alternate to Item 2) — Fabricated from min. 0.015 in. (min bare metal thickness) galvanized steel, spaced a max of 24 in. OC. Studs to be cut 3/4 in. less than assembly height.

TELLING INDUSTRIES L L C — TRUE-STUD™

2I. **Framing Members* - Steel Studs —** (As an alternate to Item 2, For use with Items 5C or 5L) - Proprietary channel shaped studs, 3-5/8 in. deep spaced a max of 24 in. OC. Studs to be cut 3/4 in less than the assembly height and installed with a ½ in. gap between the end of the stud and track at the bottom of the wall. For direct attachment of gypsum board only.

TELLING INDUSTRIES L L C — Viper25™

2J. **Framing Members* - Metal Studs —** Not shown - In lieu of Item 2 — proprietary channel shaped steel studs, min depth as indicated under Item 5, spaced a max if 24 in. OC, fabricated from min 0.020 in. thick galv steel. Studs cut 3/8 in. to 3/4 in. less in lengths than assembly heights

TELLING INDUSTRIES L L C — Viper20™

3. **Wood Structural Panel Sheathing —** (Optional, For use with Item 5 Only.)- (Not Shown) - 4 ft wide, 7/16 in. thick oriented strand board (OSB) or 15/32 in. thick structural 1 sheathing (plywood) complying with DOC PS1 or PS2, or APA Standard PRP-108, manufactured with exterior glue, applied horizontally or vertically to the steel studs. Vertical joints centered on studs, and staggered one stud space from wallboard joints. Attached to studs with flat-head self-drilling tapping screws with a min. head diam. of 0.292 in. at maximum 6 in. OC. in the perimeter and 12 in. OC. in the field. When used, fastener lengths for gypsum panels increased by min. 1/2 in.

4. **Batts and Blankets* —** (Required as indicated under Item 5) — Mineral wool batts, friction fitted between studs and runners. Min nom thickness as indicated under Item 5. See **Batts and Blankets (BKNV or BZJZ) Categories** for names of Classified companies.

4A. **Batts and Blankets* —** (Optional) — Placed in stud cavities, any glass fiber or mineral wool insulation bearing the UL Classification Marking as to Surface Burning Characteristics and/or Fire Resistance. See **Batts and Blankets (BKNV or BZJZ) Categories** for names of Classified companies.

5. **Gypsum Board* —** Gypsum panels with beveled, square or tapered edges, applied vertically or horizontally. Vertical joints centered over studs and staggered one stud cavity on opposite sides of studs. Vertical joints in adjacent layers (multilayer systems) staggered one stud cavity. Horizontal joints need not be backed by steel framing. Horizontal edge joints and horizontal butt joints on opposite sides of studs need not be staggered. Horizontal edge joints and horizontal butt joints in adjacent layers (multilayer systems) staggered a min of 12 in. The thickness and number of layers for the 1 hr, 2 hr, 3 hr and 4 hr ratings are as follows:

Gypsum Board Protection on Each Side of Wall

Rating, Hr	Min Stud Depth, in. Items 2, 2C, 2D, 2F and 2G	No. of Layers & Thkns of Panel	Min Thkns of Insulation (Item 4)
1	3-1/2	1 layer, 5/8 in. thick	Optional
1	2-1/2	1 layer, 1/2 in. thick	1-1/2 in.
1	1-5/8	1 layer, 3/4 in. thick	Optional
2	1-5/8	2 layers, 1/2 in. thick	Optional
2	1-5/8	2 layers, 5/8 in. thick	Optional
2	3-1/2	1 layer, 3/4 in. thick	3 in.
3	1-5/8	3 layers, 1/2 in. thick	Optional
3	1-5/8	2 layers, 3/4 in. thick	Optional
3	1-5/8	3 layers, 5/8 in. thick	Optional
4	1-5/8	4 layers, 5/8 in. thick	Optional
4	1-5/8	4 layers, 1/2 in. thick	Optional
4	2-1/2	2 layers, 3/4 in. thick	2 in.

CGC INC — 1/2 in. thick Type C, IP-X2 or IPC-AR; WRC, 5/8 in. thick Type AR, C, IP-AR, IP-X1, IP-X2, IPC-AR, SCX, SHX, WRX or WRC; 3/4 in. thick Types IP-X3 or ULTRACODE

UNITED STATES GYPSUM CO — 1/2 in. thick Type C, IP-X2, IPC-AR or WRC; 5/8 in. thick Type SCX, SGX, SHX, WRX, IP-X1, AR, C, WRC, FRX-G, IP-AR, IP-X2, IPC-AR ; 3/4 in. thick Types IP-X3 or ULTRACODE

USG MEXICO S A DE C V — 1/2 in. thick Type C, IP-X2, IPC-AR or WRC; 5/8 in. thick Type AR, C, IP-AR, IP-X1, IP-X2, IPC-AR, SCX, SHX, WRX, WRC or; 3/4 in. thick Types IP-X3 or ULTRACODE

When Item 7B, Steel Framing Members*, is used, Nonbearing Wall Rating is limited to 1 Hr. Min. stud depth is 3-1/2 in., min. thickness of insulation (Item 4) is 3 in., and two layers of gypsum board panels (1/2 in. or 5/8 in. thick) shall be attached to furring channels as described in Item 6. One layer of gypsum board panels (1/2 in. or 5/8 in. thick) attached to opposite side of stud without furring channels as described in Item 6.

5A. **Gypsum Board* —** (As an alternate to Item 5) — 5/8 in. thick, 24 to 54 in. wide, applied horizontally as the outer layer to one side of the assembly. Secured as described in Item 6.

CGC INC — Type SHX.

UNITED STATES GYPSUM CO — Type FRX-G, SHX.

USG MEXICO S A DE C V — Type SHX.

5B. **Gypsum Board* —** (Not Shown) - As an alternate to Item 5 when used as the base layer on one or both sides of wall when 5/8 in or ¾ in. thick products are specified. For direct attachment only to steel studs Item 2A, (not to be used with Item 3) - Nom 5/8 in. or ¾ in. may be used as alternate to all 5/8 in. or ¾ in. shown in Item 5, Wallboard Protection on Each Side of Wall table. Nom 5/8 in. or ¾ in. thick lead backed gypsum panels with beveled, square or tapered edges, applied vertically. Vertical joints centered over studs and staggered min 1 stud cavity on opposite sides of studs. Gypsum board secured to 20 MSG steel studs Item 2A with 1-1/4 in. long Type S-12 steel screws spaced 8 in. OC at perimeter and 12 in. OC in the field. To be used with Lead Batten Strips (see Item 11) or Lead Discs or Tabs (see Item 12).

RAY-BAR ENGINEERING CORP — Type RB-LBG

CRSA
649 E. South Temple
Salt Lake City, UT 84102
801.355.5915

MWL
11798 N. Lakeridge Pkwy.
Ashland, VA 23005
804-228-7473

State of Utah
Department of Administrative Services
Division of Facilities
Construction & Management
DFCM
4110 State Office Building
Salt Lake City, Utah 84114
Phone: (801) 538 - 3018
Fax: (801) 538 - 3267

DIVISION OF FACILITIES CONSTRUCTION AND MANAGEMENT
REVIEWED FOR CODE COMPLIANCE
SIGNATURE: Enzo Calfa
DATE: 08-05-2014

STATE OF UTAH
#134098
MEHRDAD SAMIE
LICENSED ARCHITECT
04.28.2014
ARCHITECT-ENGINEER STAMP

Unified State Laboratory Module 2

4451 South 2700 West, Taylorsville, UT 84118

DFCM #: 13020300

Project #: B13-024

DATE:	ISSUE TYPE:
APRIL 21, 2014	BID SET
CHECKED BY	J. NIELSEN
DRAWN BY	F. PITORE

UL DETAILS

GF003

VOLUME 1

C:\Users\fernando\Documents_A_13024_ModII_2013_fernando.rvt
7/14/2014 1:11:22 PM

5C. **Gypsum Board* —** (For Use With Item 2B) Rating Limited to 1 Hour. 5/8 in. thick, 48 in. wide, Gypsum panels with beveled, square or tapered ed applied vertically or horizontally. (Vertical Application) - The gypsum board is to be installed on each side of the studs with 1 in. long Type S coated stee screws spaced 8 in. OC starting 4 in. from the edge of the board at the vertical edges and 12 in. OC starting 6 in. from the edge of the board at the cent of each board. Gypsum boards are to be secured to the top and bottom track with screws spaced 8 in. OC starting 4 in. from the board edge. Fasteners shall not penetrate through both the stud and the track at the same time. Vertical joints are to be centered over studs and staggered one stud cavity on opposite sides of studs. (Horizontal Application) - The gypsum board is to be installed on each side of the studs with 1 in. long Type S coated steel screv spaced 8 in. OC starting 4 in. from the edge of the board at the vertical edges and 12 in. OC starting 6 in. from the edge of the board at the center of ea board. Gypsum boards are to be secured to the top and bottom track with screws spaced 8 in. OC starting 4 in. from the board edge. Fasteners shall no penetrate through both the stud and the track at the same time. All horizontal joints are to be backed as outlined under section VI of Volume 1 in the Fi Resistive Directory.

CGC INC — Type SCX.

UNITED STATES GYPSUM CO — Type SCX, SGX.

USG MEXICO S A DE C V — Type SCX.

5D. **Gypsum Board* —** (As an alternate to Item 5) — 5/8 in. thick, 48 in. wide, applied vertically or horizontally. Secured as described in Item 6. For u with Items 1 and 2 only.

UNITED STATES GYPSUM CO — Type USGX.

5E. **Gypsum Board* —** (Not Shown) - (As an alternate to Item 5 when used as the base layer on one or both sides of wall when 1/2 in. or 5/8 in thick products are specified, For direct attachment only to steel studs Item 2A, not to be used with Item 3). Nominal 5/8 in. thick lead backed gypsum panels with beveled, square or tapered edges, applied vertically. Vertical joints centered over studs and staggered min 1 stud cavity on opposite sides of studs. Wallboard secured to studs with 1-1/4 in. long Type S-12 (or No. 6 by 1-1/4 in. long bugle head fine driller) steel screws spaced 8 in. OC at perimeter a 12 in. OC in the field.

NEW ENGLAND LEAD BURNING CO INC, DBA NELCO — Nelco

5F. **Gypsum Board* —** (As an alternate to Item 5) — For use with Items 1E and 2E and limited to 1 Hour Rating only, Gypsum panels with beveled, sq or tapered edges, applied vertically, and fastened to the steel studs with 1 in. long Type S screws spaced 8 in. OC along vertical and bottom edges and in. OC in the field. Vertical joints centered over studs and staggered one stud cavity on opposite sides of studs. Steel stud depth shall be a minimum 3-5 in.

UNITED STATES GYPSUM CO — 5/8 in. thick Type SCX, SGX.

5G. **Gypsum Board* —** (As an alternate to Item 5) — For use with Items 1E and 2E only, Gypsum panels with beveled, square or tapered edges, applie vertically or horizontally, as specified in the table below and fastened to the steel studs as described in Item 6. Vertical joints centered over studs and staggered one stud cavity on opposite sides of studs. Vertical joints in adjacent layers (multilayer systems) staggered one stud cavity. Horizontal joints need not be backed by steel framing. Horizontal edge joints and horizontal butt joints on opposite sides of studs need not be staggered. Horizontal edge joints and horizontal butt joints in adjacent layers (multilayer systems) staggered a min of 12 in. The thickness and number of layers for the 2 hr, 3 hr a 4 hr ratings are as follows:

Gypsum Board Protection on Each Side of Wall

Rating, Hr	Min Stud Depth, in. Item 2E	No. of Layers & Thickness of Panel	Min Thkns of Insulation (Item 4)
2	1-5/8	2 layers, 1/2 in. thick	Optional
2	1-5/8	2 layers, 5/8 in. thick	Optional
3	1-5/8	3 layers, 1/2 in. thick	Optional
3	1-5/8	3 layers, 5/8 in. thick	Optional
4	1-5/8	4 layers, 5/8 in. thick	Optional
4	1-5/8	4 layers, 1/2 in. thick	Optional

CGC INC — 1/2 in. thick Type C, IP-X2 or IPC-AR;, 5/8 in. thick Type AR, C, IP-AR, IP-X1, IP-X2, IPC-AR, SCX, SHX, or; 3/4 in. thick Types IP-X3 or ULTRACODE

UNITED STATES GYPSUM CO — 1/2 in. thick Type C, IP-X2, IPC-AR or; 5/8 in. thick Type SCX, SGX, SHX, IP-X1, AR, C, , FRX-G, IP-AR, IP-X2, IPC-A 3/4 in. thick Types IP-X3 or ULTRACODE

USG MEXICO S A DE C V — 1/2 in. thick Type C, IP-X2, IPC-AR or; 5/8 in. thick Type AR, C, IP-AR, IP-X1, IP-X2, IPC-AR, SCX, SHX, or; 3/4 in. thick Types IP-X3 or ULTRACODE

5H. **Gypsum Board* —** (Not Shown) - (As an alternate to Item 5 when used as the base layer on one or both sides of wall when 5/8 or 3/4 in thick products are specified. For direct attachment only to steel studs Item 2A, (not to be used with Item 3) - Nom 5/8 or 3/4 in. may be used as alternate to 5/8 or 3/4 in. shown in Item 5, Wallboard Protection on Each Side of Wall table. Nom 5/8 or 3/4 in. thick lead backed gypsum panels with beveled, squa or tapered edges, applied vertically. Vertical joints centered over 20 MSG steel studs and staggered min 1 stud cavity on opposite sides of studs. Wallbo secured to studs with 1-1/4 in. long Type S-12 steel screws spaced 8 in. OC at perimeter and 12 in. OC in the field. Gypsum board secured to 20 MSG s studs Item 2B with 1-1/4 in. long Type S-12 steel screws spaced 8 in. OC at perimeter and 12 in. OC in the field. For Joint Compound see Item 5. To be used with Lead Batten Strips (see Item 11A) or Lead Discs (see Item 12A).

MAYCO INDUSTRIES INC — Type X-Ray Shielded Gypsum

5I. **Gypsum Board* —** (As an alternate to Item 5) - Nom. 5/8 in. thick gypsum panels with beveled, square or tapered edges installed as described in 5. Steel stud minimum depth shall be as indicated in Item 5.

CGC INC — Type ULX

UNITED STATES GYPSUM CO — Type ULX

USG MEXICO S A DE C V — Type ULX

5J. **Gypsum Board* —** (Not Shown) - (As an alternate to Item 5 when used as the base layer on one or both sides of wall when 1/2 in. or 5/8 in thick products are specified, For direct attachment only to steel studs Item 2A, not to be used with Item 3). Nom 5/8 in. thick lead backed gypsum panels wit beveled, square or tapered edges, applied vertically. Vertical joints centered over studs and staggered min 1 stud cavity on opposite sides of studs. Wallboard secured to studs with 1-1/4 in. long Type S-12 steel screws gypsum panel steel screws spaced 8 in. OC at perimeter and 12 in. OC in the fiel Lead batten strips required behind vertical joints of lead backed gypsum wallboard and optional at remaining stud locations. Lead batten strips, min 2 in wide, max 8 ft long with a max thickness of 0.14 in. placed on the face of studs and attached to the stud with construction adhesive and two 1 in. long T S-12 pan head steel screws, one at the top of the strip and one at the bottom of the strip. Lead discs, nominal 3/8 in. diam by max 0.085 in. thick, Compression fitted or adhered over the screw heads. Lead batten strips and discs to have a purity of 99.9% meeting the Federal specification QQ-L-201 Grade "C".

RADIATION PROTECTION PRODUCTS INC — Type RPP - Lead Lined Drywall

6. **Fasteners —** (Not shown) — For use with Items 2 and 2F - Type S or S-12 steel screws used to attach panels to studs (Item 2) or furring channels (Item 7). **Single layer systems:** 1 in. long for 1/2 and 5/8 in. thick panels or 1-1/4 in. long for 3/4 in. thick panels, spaced 8 in. OC when panels are applied horizontally, or 8 in. OC along vertical and bottom edges and 12 in. OC in the field when panels are applied vertically. **Two layer systems:** First layer- 1 in. long for 1/2 and 5/8 in. thick panels or 1-1/4 in. long for 3/4 in. thick panels, spaced 16 in. OC. Second layer- 1-5/8 in. long for 1/2 in., 5/8 in. thick panels or 2-1/4 in. long for 3/4 in. thick panels, spaced 16 in. OC with screws offset 8 in. from first layer.**Three-layer systems:** First layer- 1 in. long for 1/2 in., 5/8 in. thick panels, spaced 24 in. OC. Second layer- 1-5/8 in. long for 1/2 in., 5/8 in. thick panels, spaced 24 in. OC. Third layer- 2-1/4 in. long for 1/2 in., 5/8 in. thick panels or 2-5/8 in. long for 5/8 in. thick panels, spaced 12 in. OC. Screws offset min 6 in. from layer below. **Four-layer systems:** First layer- 1 in. long for 1/2 in., 5/8 in. thick panels, spaced 24 in. OC. Second layer- 1-5/8 in. long for 1/2 in., 5/8 in. thick panels, spaced 24 in. OC. Third layer- 2-1/4 in. long for 1/2 in. thick panels or 2-5/8 in. long for 5/8 in. thick panels, spaced 24 in. OC. Fourth layer- 2-5/8 in. long for 1/2 in. thick panels or 3 in. long for 5/8 in. thick panels, spaced 12 in. OC. Screws offset min 6 in. from layer below.

7. **Furring Channels —** (Optional, not shown, for single or double layer systems) — Resilient furring channels fabricated from min 25 MSG corrosion-protected steel, spaced vertically a max of 24 in. OC. Flange portion attached to each intersecting stud with 1/2 in. long Type S-12 steel screws. Not for use with Item 5A and 5E.

7A. **Framing Members* —** (Optional on one or both sides, not shown, for single or double layer systems) — As an alternate to Item 7, furring channels and Steel Framing Members as described below:

a. **Furring Channels —** Formed of No. 25 MSG galv steel. 2-9/16 in. or 2-23/32 in. wide by 7/8 in. deep, spaced max. 24 in. OC perpendicular to studs. Channels secured to studs as described in Item b. Gypsum board attached to furring channels as described in Item 6. Not for use with Item 5A and 5E.

b. **Steel Framing Members* —** Used to attach furring channels (Item 7Aa) to studs (Item 2). Clips spaced max. 48 in. OC. RSIC-1 and RSIC-1 (2.75) clips secured to studs with No. 8 x 1-1/2 in. minimum self-drilling, S-12 steel screw through the center grommet. RSIC-V and RSIC-V (2.75) clips secured to studs with No. 8 x 9/16 in. minimum self-drilling, S-12 steel screw through the center hole. Furring channels are friction fitted into clips. RSIC-1 and RSIC-V clips for use with 2-9/16 in. wide furring channels. RSIC-1 (2.75) and RSIC-V (2.75) clips for use with 2-23/32 in. wide furring channels.

PAC INTERNATIONAL INC — Types RSIC-1, RSIC-V, RSIC-1 (2.75), RSIC-V (2.75).

7B. **Framing Members* —** (Optional, Not Shown) — As an alternate to Item 7, for single or double layer systems, furring channels and Steel Framing Members on only one side of studs as described below:

a. **Furring Channels —** Formed of No. 25 MSG galv steel, spaced 24 in. OC perpendicular to studs. Channels secured to studs as described in Item b. Batts and Blankets placed in stud cavity as described in Item 5. Two layers of gypsum board attached to furring channels as described in Item 5. Not for use with Item 5A and 5E.

b. **Steel Framing Members* —** Used to attach furring channels (Item 7Ba) to one side of studs (Item 2) only. Clips spaced 48 in. OC., and secured to studs with two No. 8 x 2-1/2 in. coarse drywall screws, one through the hole at each end of the clip. Furring channels are friction fitted into clips.

KINETICS NOISE CONTROL INC — Type Isomax

7C. **Framing Members* —** Optional - Not Shown - Used as an alternate method to attach resilient channels (Item 7). Clips attached at each intersection of the resilient channel and the steel studs (Item 2). Resilient channels are friction fitted into clips, and then clips are secured to the steel stud with min. 1 in. long Type S-12 steel screws through the center hole of the clip and the resilient channel flange.

KEENE BUILDING PRODUCTS CO INC — Type RC Assurance.

7D. **Framing Members* —** (Not Shown) — (Optional on one or both sides, not shown, for single or double layer systems) — As an alternate to Item 7, furring channels and Steel Framing Members as described below:

a. **Furring Channels —** Formed of No. 25 MSG galv steel. 2-3/8 in. wide by 7/8 in. deep, spaced max. 24 in. OC perpendicular to studs. Channels secured to studs as described in Item b. Gypsum board attached to furring channels as described in Item 6. Not for use with Item 5A and 5E.

b. **Steel Framing Members* —** Used to attach furring channels (Item 7Aa) to studs (Item 2). Clips spaced max. 48 in. OC. GENIECLIPS secured to studs with No. 8 x 1-1/2 in. minimum self-drilling, S-12 steel screw through the center grommet. Furring channels are friction fitted into clips.

PLITEQ INC — Type GENIECLIP

8. **Joint Tape and Compound —** Vinyl or casein, dry or premixed joint compound applied in two coats to joints and screw heads of outer layers. Paper tape, nom 2 in. wide, embedded in first layer of compound over all joints of outer layer panels. Paper tape and joint compound may be omitted when gypsum panels are supplied with a square edge.

9. **Siding, Brick or Stucco —** (Optional, not shown) — Aluminum, vinyl or steel siding, brick veneer or stucco, meeting the requirements of local code agencies, installed over gypsum panels. Brick veneer attached to studs with corrugated metal wall ties attached to each stud with steel screws, not more than each sixth course of brick.

10. **Caulking and Sealants* —** (Optional, not shown) — A bead of acoustical sealant applied around the partition perimeter for sound control.

UNITED STATES GYPSUM CO — Type AS

11. **Lead Batten Strips —** (Not Shown, For Use With Item 5B) - Lead batten strips, min 1-1/2 in. wide, max 10 ft long with a max thickness of 0.125 in. Strips placed on the interior face of studs and attached from the exterior face of the stud with two 1 in. long Type S-12 pan head steel screws, one at the top of the strip and one at the bottom of the strip. Lead batten strips to have a purity of 99.9% meeting the Federal specification QQ-L-201f, Grade "C". Lead batten strips required behind vertical joints of lead backed gypsum wallboard (Item 5B) and optional at remaining stud locations. Required behind vertical joints.

11A. **Lead Batten Strips —** (Not Shown, For Use With Item 5H) Lead batten strips, 2 in. wide, max 10 ft long with a max thickness of 0.140 in. Strips placed on the face of studs and attached to the stud with two min. 1 in. long min. Type S-8 pan head steel screws, one at the top of the strip and one at the bottom of the strip or with one min. 1 in. long min. Type S-8 pan head steel screw at the top of the strip. Lead batten strips to have a purity of 99.9% meeting the Federal specification QQ-L-201f, Grades "A, B, C or D". Lead batten strips required behind vertical joints of lead backed gypsum wallboard and optional at remaining stud locations.

12. **Lead Discs or Tabs —** (Not Shown, For Use With Item 5B) - Used in lieu of or in addition to the lead batten strips (Item 11) or optional at other locations - Max 3/4 in. diam by max 0.125 in. thick lead discs compression fitted or adhered over steel screw heads or max 1/2 in. by 1-1/4 in. by max 0.125 in. thick lead tabs placed on gypsum boards (Item 5B) underneath screw locations prior to the installation of the screws. Lead discs or tabs to have a purity of 99.9% meeting the Federal specification QQ-L-201f, Grade "C".

12A. **Lead Discs —** (Not Shown, for use with Item 5H) Max 5/16 in. diam by max 0.140 in. thick lead discs compression fitted or adhered over steel screw heads. Lead discs to have a purity of 99.9% meeting the Federal Specification QQ-L-201f, Grades "A, B, C or D".

13. **Lead Batten Strips —** (Not Shown, For Use With Item 5E) Lead batten strips, 2 in. wide, max 10 ft long with a max thickness of 0.142 in. Strips placed on the face of studs and attached to the stud with two min. 1 in. long min. Type S-8 pan head steel screws, one at the top of the strip and one at the bottom of the strip or with one min. 1 in. long min. Type S-8 pan head steel screw at the top of the strip. Lead batten strips to have a purity of 99.9% meeting the Federal specification QQ-L-201f, Grade "C". Lead batten strips required behind vertical joints of lead backed gypsum wallboard (Item 5E) and optional at remaining stud locations.

14. **Lead Tabs —** (Not Shown, For Use With Item 5E) 2 in. wide, 5 in. long with a max thickness of 0.142 in. Tabs friction-fit around front face of stud, the stud folded back flange, and the back face of the stud. Tabs required at each location where a screw (that secures the gypsum boards, Item 5E) will penetrate the steel stud. Lead tabs to have a purity of 99.9% meeting the Federal specification QQ-L-201f, Grade "C". Lead tabs may be held in place with standard adhesive tape if necessary.

*Bearing the UL Classification Mark

Last Updated on 2013-04-09

Questions? Print this page Terms of Use Page Top

© 2013 UL LLC

When the UL Leaf Mark is on the product, or when the word "Environment" is included in the UL Mark, please search the UL Environment database for additional information regarding this product's certification.

The appearance of a company's name or product in this database does not in itself assure that products so identified have been manufactured under UL's Follow-Up Service. Only those products bearing the UL Mark should be considered to be Listed and covered under UL's Follow-Up Service. Always look for the Mark on the product.

UL permits the reproduction of the material contained in the Online Certification Directory subject to the following conditions: 1. The Guide Information, Designs and/or Listings (files) must be presented in their entirety and in a non-misleading manner, without any manipulation of the data (or drawings). 2. The statement "Reprinted from the Online Certifications Directory with permission from UL" must appear adjacent to the extracted material. In addition, the reprinted material must include a copyright notice in the following

Design No. Y715
BXUV.Y715
Fire Resistance Ratings - ANSI/UL 263

Page Bottom

Design/System/Construction/Assembly Usage Disclaimer

- Authorities Having Jurisdiction should be consulted in all cases as to the particular requirements covering the installation and use of UL Listed or Classified products, equipment, system, devices, and materials.
- Authorities Having Jurisdiction should be consulted before construction.
- Fire resistance assemblies and products are developed by the design submitter and have been investigated by UL for compliance with applicable requirements. The published information cannot always address every construction nuance encountered in the field.
- When field issues arise, it is recommended the first contact for assistance be the technical service staff provided by the product manufacturer noted for the design. Users of fire resistance assemblies are advised to consult the general Guide Information for each product category and each group of assemblies. The Guide Information includes specifics concerning alternate materials and alternate methods of construction.
- Only products which bear UL's Mark are considered as Classified, Listed, or Recognized.

Fire Resistance Ratings - ANSI/UL 263

See General Information for Fire Resistance Ratings - ANSI/UL 263

Design No. Y715

December 14, 2012

Ratings — 1, 1-1/2, 2, 3 and 4 h

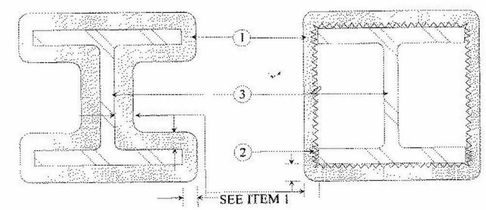

1. **Spray-Applied Fire Resistive Materials* —** Applied by mixing with water and spraying in more than one coat to the thicknesses shown below, to steel surfaces which are clean and free of dirt, loose scale, and oil. Min avg and min ind density of 15/14 pcf respectively. For method of density determination, see Design Information Section, Sprayed Material.

The thickness of Spray-Applied Fire Resistive Materials to be applied to all surfaces of the column (Item 1) required for rating periods of 1 h, 1-1/2 h, 2 h, 3 h, 4 h may be determined by the equation:

$$h = \frac{R}{1.05\,(W/D) + 0.61}$$

Where:

h = Spray-Applied Fire Resistive Materials thickness in the range 0.25-3.875 in.

R = Fire resistance rating in hours (1 - 4 h)

D = Heated perimeter of steel column in inches

W = Weight of steel column in pounds per foot

W/D = 0.33 to 6.62

As an alternate to the equation, the min thickness of Spray-Applied Fire Resistive Materials required for various fire resistance ratings of contour sprayed or boxed columns may be determined from the table below:

Min Col Size	W/D	Min Thk In. 1 Hr	1-1/2 Hr	2 Hr	3 Hr	4 Hr
W6X9	0.33	1-1/8	1-1/2	2	2-1/2	3-1/8
W6X16	0.57	13/16	1-1/4	1-11/16	2-1/2	3-5/16
W8X28	0.67	3/4	1-3/16	1-3/8	2	2-11/16
W10X49	0.83	11/16	7/8	1-1/8	1-11/16	2-1/2
W14X228	2.49	5/16	1/2	9/16	7/8	1-1/4
W14X730	6.62	5/16	5/16	5/16	3/8	9/16

The thicknesses contained in the table below are applicable when the Spray-Applied Fire Resistive Materials applied to columns' flange tips are reduced to one-half that shown in the table below:

CRSA
649 E. South Temple
Salt Lake City, UT 84102
801.355.5915

MWL
11798 N. Lakeridge Pkwy.
Ashland, VA 23005
804-228-7473

State of Utah
Department of Administrative Services
Division of Facilities Construction & Management
4110 State Office Building
Salt Lake City, Utah 84114
Phone: (801) 538 - 3018
Fax: (801) 538 - 3267

DIVISION OF FACILITIES CONSTRUCTION AND MANAGEMENT
REVIEWED FOR CODE COMPLIANCE
SIGNATURE: Ernie Gallegos
DATE: 08-05-2014

STATE OF UTAH #134096 MEHRDAD SAMIE LICENSED ARCHITECT
04-28-2014
ARCHITECT-ENGINEER STAMP

Unified State Laboratory Module 2
4451 South 2700 West, Taylorsville, UT 84118

DFCM #: 13020300
Project #: B13-024

DATE:	ISSUE TYPE:
APRIL 21, 2014	BID SET
CHECKED BY	J. NIELSEN
DRAWN BY	F. PITORE

UL DETAILS

GF004
VOLUME 1

C:\Users\fernando\Documents_A_13024_Modi_2013_fernando.rvt
7/14/2014 11:12:28 PM

Member		Half Flange Tip Thickness				
Min. Column Size	W/D	1 hr	1.5 hr	2 hr	3 hr	4 hr
W6x9	0.340	1-1/8	1-5/8	2	2-15/16	3-15/16
W10x12	0.347	1-1/8	1-5/8	2	2-15/16	3-7/8
W12x14	0.363	1-1/16	1-5/8	1-15/16	2-7/8	3-13/16
W12x16	0.410	1-1/16	1-9/16	1-7/8	2-13/16	3-11/16
W8x13	0.421	1-1/16	1-9/16	1-7/8	2-3/4	3-11/16
W10x15	0.429	1-1/16	1-9/16	1-7/8	2-3/4	3-5/8
W6x15	0.431	1	1-9/16	1-7/8	2-3/4	3-5/8
W6x12	0.448	1	1-1/2	1-13/16	2-11/16	3-9/16
W14x22	0.476	1	1-1/2	1-13/16	2-11/16	3-1/2
W8x15	0.481	1	1-1/2	1-13/16	2-5/8	3-1/2
W10x17	0.482	1	1-1/2	1-13/16	2-5/8	3-1/2
W12x19	0.485	1	1-1/2	1-13/16	2-5/8	3-1/2
W8x18	0.499	1	1-7/16	1-3/4	2-5/8	3-7/16
W16x26	0.499	1	1-7/16	1-3/4	2-5/8	3-7/16
W10x22	0.523	15/16	1-7/16	1-3/4	2-9/16	3-7/16
W12x26	0.531	15/16	1-7/16	1-3/4	2-9/16	3-7/16
W10x19	0.538	15/16	1-7/16	1-11/16	2-9/16	3-7/16
W5x16	0.550	15/16	1-7/16	1-11/16	2-1/2	3-7/16
W4x13	0.556	15/16	1-7/16	1-11/16	2-1/2	3-7/16
W14x26	0.559	15/16	1-7/16	1-11/16	2-1/2	3-7/16
W12x22	0.560	15/16	1-7/16	1-11/16	2-1/2	3-7/16
W14x30	0.562	15/16	1-7/16	1-11/16	2-1/2	3-7/16
W6x20	0.563	15/16	1-7/16	1-11/16	2-1/2	3-7/16
W8x21	0.577	7/8	1-3/8	1-11/16	2-1/2	3-3/8
W6x16	0.584	7/8	1-1/4	1-11/16	2-7/16	3-3/8
W8x24	0.591	7/8	1-1/4	1-5/8	2-7/16	3-1/4
W16x31	0.592	7/8	1-1/4	1-5/8	2-7/16	3-1/4
W18x35	0.602	7/8	1-1/4	1-5/8	2-7/16	3-3/16
W12x30	0.607	7/8	1-1/4	1-5/8	2-7/16	3-3/16
W10x26	0.612	7/8	1-1/4	1-5/8	2-7/16	3-3/16
W16x36	0.617	7/8	1-1/4	1-5/8	2-3/8	3-3/16
W14x34	0.633	13/16	1-1/4	1-5/8	2-3/8	3-1/8
W5x19	0.644	13/16	1-3/16	1-5/8	2-3/8	3-1/8
W10x33	0.661	13/16	1-3/16	1-9/16	2-15/16	3-1/16
W8x31	0.665	13/16	1-3/16	1-9/16	2-15/16	3-1/16
W21x44	0.672	13/16	1-3/16	1-9/16	2-15/16	3-1/16
W16x40	0.686	13/16	1-3/16	1-9/16	2-15/16	3-1/16
W8x28	0.688	3/4	1-3/16	1-9/16	2-15/16	3-1/16
W18x40	0.688	3/4	1-3/16	1-9/16	2-15/16	3-1/16
W6x25	0.696	3/4	1-3/16	1-9/16	2-15/16	3
W10x30	0.699	3/4	1-3/16	1-9/16	2-1/4	3
W12x35	0.703	3/4	1-3/16	1-9/16	2-1/4	3
W14x38	0.706	3/4	1-3/16	1-9/16	2-1/4	3
W12x40	0.734	3/4	1-1/8	1-1/2	2-1/4	2-15/16
W8x35	0.749	3/4	1-1/8	1-1/2	2-3/16	2-15/16
W24x55	0.749	3/4	1-1/8	1-1/2	2-3/16	2-15/16
W14x43	0.752	3/4	1-1/8	1-1/2	2-3/16	2-15/16
W21x50	0.754	3/4	1-1/8	1-1/2	2-3/16	2-15/16
W16x45	0.767	3/4	1-1/8	1-1/2	2-3/16	2-7/8
W18x50	0.778	3/4	1-1/8	1-1/2	2-3/16	2-7/8
W10x39	0.780	3/4	1-1/8	1-7/16	2-3/16	2-7/8
W18x46	0.786	3/4	1-1/8	1-7/16	2-3/16	2-7/8
W12x45	0.829	3/4	1-1/16	1-7/16	2-1/8	2-13/16
W14x48	0.835	3/4	1-1/16	1-7/16	2-1/8	2-3/4
W24x68	0.837	3/4	1-1/16	1-7/16	2-1/8	2-3/4
W10x49	0.840	3/4	1-1/16	1-7/16	2-1/16	2-3/4
W24x62	0.844	3/4	1-1/16	1-7/16	2-1/16	2-3/4
W16x50	0.846	3/4	1-1/16	1-7/16	2-1/16	2-3/4
W21x62	0.846	3/4	1-1/16	1-7/16	2-1/16	2-3/4
W8x40	0.849	3/4	1-1/16	1-7/16	2-1/16	2-3/4
W18x55	0.850	3/4	1-1/16	1-7/16	2-1/16	2-3/4
W12x53	0.855	3/4	1-1/16	1-3/8	2-1/16	2-3/4
W21x57	0.857	3/4	1-1/16	1-3/8	2-1/16	2-3/4
W10x45	0.888	3/4	1-1/16	1-3/8	2-1/16	2-11/16
W12x50	0.909	11/16	1-1/16	1-3/8	2	2-11/16
W14x53	0.915	11/16	1-1/16	1-3/8	2	2-5/8
W27x84	0.921	11/16	1-1/16	1-3/8	2	2-5/8
W10x54	0.922	11/16	1	1-3/8	2	2-5/8
W18x60	0.923	11/16	1	1-3/8	2	2-5/8
W12x58	0.925	11/16	1	1-3/8	2	2-5/8
W12x65	0.925	11/16	1	1-3/8	2	2-5/8
W21x68	0.926	11/16	1	1-3/8	2	2-5/8
W14x61	0.928	11/16	1	1-3/8	2	2-5/8
W24x76	0.933	11/16	1	1-3/8	2	2-5/8
W16x67	0.936	11/16	1	1-5/16	2	2-5/8
W16x57	0.963	11/16	1	1-5/16	1-5/16	2-9/16

Member		Half Flange Tip Thickness				
Min. Column Size	W/D	1 hr	1.5 hr	2 hr	3 hr	4 hr
W18x76	0.971	11/16	1	1-5/16	1-5/16	2-9/16
W21x73	0.989	11/16	1	1-5/16	1-5/16	2-9/16
W18x65	0.997	11/16	1	1-5/16	1-5/16	2-9/16
W8x48	1.000	11/16	1	1-5/16	1-5/16	2-1/2
W30x99	1.000	11/16	1	1-5/16	1-5/16	2-1/2
W10x60	1.010	11/16	1	1-5/16	1-7/8	2-1/2
W12x72	1.020	11/16	1	1-5/16	1-7/8	2-1/2
W24x84	1.020	11/16	1	1-5/16	1-7/8	2-1/2
W27x94	1.030	11/16	1	1-1/4	1-7/8	2-1/2
W14x68	1.040	11/16	15/16	1-1/4	1-7/8	2-1/2
W16x77	1.070	11/16	15/16	1-1/4	1-7/8	2-7/16
W24x104	1.070	11/16	15/16	1-1/4	1-7/8	2-7/16
W14x90	1.080	5/8	15/16	1-1/4	1-13/16	2-7/16
W18x71	1.080	5/8	15/16	1-1/4	1-13/16	2-7/16
W33x118	1.080	5/8	15/16	1-1/4	1-13/16	2-7/16
W18x86	1.090	5/8	15/16	1-1/4	1-13/16	2-7/16
W30x108	1.090	5/8	15/16	1-1/4	1-13/16	2-7/16
W12x79	1.110	5/8	15/16	1-1/4	1-13/16	2-3/8
W27x102	1.110	5/8	15/16	1-1/4	1-13/16	2-3/8
W14x74	1.120	5/8	15/16	1-1/4	1-13/16	2-3/8
W21x83	1.120	5/8	15/16	1-1/4	1-13/16	2-3/8
W21x101	1.130	5/8	15/16	1-3/16	1-13/16	2-3/8
W24x94	1.140	5/8	15/16	1-3/16	1-13/16	2-3/8
W10x68	1.150	5/8	15/16	1-3/16	1-3/4	2-5/16
W36x135	1.150	5/8	15/16	1-3/16	1-3/4	2-5/16
W30x116	1.160	5/8	15/16	1-3/16	1-3/4	2-5/16
W14x99	1.180	5/8	14/16	1-3/16	1-3/4	2-5/16
W33x130	1.180	5/8	14/16	1-3/16	1-3/4	2-5/16
W8x58	1.200	5/8	14/16	1-3/16	1-3/4	2-5/16
W24x117	1.200	5/8	14/16	1-3/16	1-3/4	2-5/16
W12x87	1.220	5/8	14/16	1-3/16	1-11/16	2-1/4
W16x89	1.220	5/8	14/16	1-3/16	1-11/16	2-1/4
W18x97	1.220	5/8	14/16	1-3/16	1-11/16	2-1/4
W14x82	1.230	5/8	14/16	1-3/16	1-11/16	2-1/4
W27x114	1.230	5/8	14/16	1-3/16	1-11/16	2-1/4
W21x93	1.240	5/8	14/16	1-1/8	1-11/16	2-1/4
W21x111	1.240	5/8	14/16	1-1/8	1-11/16	2-1/4
W30x124	1.240	5/8	14/16	1-1/8	1-11/16	2-1/4
W36x150	1.270	5/8	14/16	1-1/8	1-11/16	2-3/16
W10x77	1.280	5/8	14/16	1-1/8	1-11/16	2-3/16
W33x414	1.280	5/8	14/16	1-1/8	1-11/16	2-3/16
W14x109	1.290	9/16	14/16	1-1/8	1-11/16	2-3/16
W30x132	1.320	9/16	14/16	1-1/8	1-5/8	2-3/16
W18x106	1.330	9/16	14/16	1-1/8	1-5/8	2-1/8
W36x194	1.330	9/16	14/16	1-1/8	1-5/8	2-1/8
W12x96	1.340	9/16	13/16	1-1/8	1-5/8	2-1/8
W21x122	1.350	9/16	13/16	1-1/8	1-5/8	2-1/8
W27x146	1.350	9/16	13/16	1-1/8	1-5/8	2-1/8
W36x160	1.350	9/16	13/16	1-1/8	1-5/8	2-1/8
W8x67	1.370	9/16	13/16	1-1/16	1-5/8	2-1/8
W16x100	1.370	9/16	13/16	1-1/16	1-5/8	2-1/8
W33x152	1.370	9/16	13/16	1-1/16	1-5/8	2-1/8
W14x120	1.420	9/16	13/16	1-1/16	1-9/16	2-1/16
W36x170	1.430	9/16	13/16	1-1/16	1-9/16	2-1/16
W10x88	1.450	9/16	13/16	1-1/16	1-9/16	2-1/16
W21x132	1.450	9/16	13/16	1-1/16	1-9/16	2-1/16
W12x106	1.470	9/16	13/16	1-1/16	1-9/16	2
W30x173	1.470	9/16	13/16	1-1/16	1-9/16	2
W18x119	1.480	9/16	13/16	1-1/16	1-1/2	2
W24x146	1.480	9/16	13/16	1-1/16	1-1/2	2
W27x161	1.480	9/16	13/16	1-1/16	1-1/2	2
W36x182	1.520	9/16	12/16	1	1-1/2	2
W14x132	1.560	1/2	12/16	1	1-1/2	1-15/16
W33x201	1.580	1/2	12/16	1	1-7/16	1-15/16
W21x147	1.610	1/2	12/16	1	1-7/16	1-15/16
W30x191	1.620	1/2	12/16	1	1-7/16	1-7/8
W36x194	1.620	1/2	12/16	1	1-7/16	1-7/8
W24x162	1.630	1/2	12/16	1	1-7/16	1-7/8
W27x178	1.630	1/2	12/16	1	1-7/16	1-7/8
W10x100	1.640	1/2	12/16	1	1-7/16	1-7/8
W14x145	1.640	1/2	12/16	1	1-7/16	1-7/8
W12x120	1.650	1/2	12/16	15/16	1-7/16	1-7/8
W36x230	1.690	1/2	12/16	15/16	1-3/8	1-7/8
W33x221	1.730	1/2	11/16	15/16	1-3/8	1-13/16
W36x210	1.740	1/2	11/16	15/16	1-3/8	1-13/16
W30x211	1.760	1/2	11/16	15/16	1-3/8	1-13/16

Member		Half Flange Tip Thickness				
Min. Column Size	W/D	1 hr	1.5 hr	2 hr	3 hr	4 hr
W14x159	1.780	1/2	11/16	15/16	1-3/8	1-13/16
W36x245	1.790	1/2	11/16	15/16	1-3/8	1-13/16
W10x112	1.810	1/2	11/16	15/16	1-5/16	1-3/4
W12x136	1.860	1/2	11/16	7/8	1-5/16	1-3/4
W33x241	1.870	1/2	11/16	7/8	1-5/16	1-3/4
W36x260	1.900	7/16	11/16	7/8	1-5/16	1-11/16
W14x176	1.960	7/16	11/16	7/8	1-1/4	1-11/16
W36x280	2.030	7/16	10/16	7/8	1-1/4	1-5/8
W12x152	2.040	7/16	10/16	13/16	1-1/4	1-5/8
W14x193	2.140	7/16	10/16	13/16	1-3/16	1-5/8
W36x300	2.170	7/16	10/16	13/16	1-3/16	1-5/8
W12x170	2.260	7/16	10/16	13/16	1-1/8	1-5/8
W14x211	2.320	7/16	9/16	3/4	1-1/8	1-5/8
W12x190	2.500	3/8	9/16	3/4	1-1/16	1-5/8
W14x233	2.550	3/8	9/16	11/16	1-1/16	1-5/8
W12x210	2.730	3/8	8/16	11/16	1-1/16	1-7/16
W14x257	2.780	3/8	8/16	11/16	1-1/16	1-7/16
W12x230	2.960	3/8	8/16	5/8	15/16	1-3/8
W14x283	3.030	5/16	8/16	5/8	15/16	1-3/8
W12x252	3.200	5/16	8/16	5/8	7/8	1-5/16
W14x311	3.300	5/16	7/16	5/8	7/8	1-1/4
W12x279	3.500	5/16	7/16	9/16	13/16	1-1/4
W14x342	3.580	5/16	7/16	9/16	13/16	1-3/16
W12x305	3.760	5/16	7/16	9/16	13/16	1-3/16
W14x370	3.840	5/16	7/16	1/2	3/4	1-1/8
W12x336	4.060	5/16	6/16	1/2	3/4	1-1/8
W14x398	4.090	5/16	6/16	1/2	3/4	1-1/16
W14x426	4.320	5/16	6/16	1/2	11/16	1-1/16
W14x455	4.590	5/16	6/16	7/16	11/16	1
W14x500	4.950	5/16	5/16	7/16	5/8	15/16
W14x550	5.340	5/16	5/16	7/16	5/8	7/8
W14x605	5.820	5/16	5/16	3/8	9/16	7/8
W14x665	6.210	5/16	5/16	3/8	1/2	13/16
W14x730	6.760	5/16	5/16	5/16	1/2	3/4

ARABIAN VERMICULITE INDUSTRIES — Types MK-6/CBF, MK-6/ED, MK-6/HY, MK-10 HB, MK-6/HB, MK-6s, MK-6 GF, Sonotex 1.

GRACE KOREA INC — Types MK-6/CBF, MK-6/ED, MK-6/HY, MK-10 HB, MK-6/HB, MK-6 GF, MK-6s, Monokote Acoustic 1 .

W R GRACE & CO - CONN — Types MK-6/HY, MK-10 HB, MK-6/HB, MK-6s, MK-6 GF, Monokote Acoustic 1 , RG .

2. **Metal Lath —** (Optional for contour application) — 3.4 lb per sq yd galv or painted expanded steel lath. Lath shall be lapped 1 in. and tied together with No. 18 SWG galv steel; wire spaced vertically 6 in. OC.

3. **Steel Column —** Wide flange steel column, min sizes as shown in the tables.

*Bearing the UL Classification Mark

Last Updated on 2012-12-14

Questions? Print this page Terms of Use Page Top

© 2013 UL LLC

When the UL Leaf Mark is on the product, or when the word "Environment" is included in the UL Mark, please search the UL Environment database for additional information regarding this product's certification.

The appearance of a company's name or product in this database does not in itself assure that products so identified have been manufactured under UL's Follow-Up Service. Only those products bearing the UL Mark should be considered to be Listed and covered under UL's Follow-Up Service. Always look for the Mark on the product.

UL permits the reproduction of the material contained in the Online Certification Directory subject to the following conditions: 1. The Guide Information, Designs and/or Listings (files) must be presented in their entirety and in a non-misleading manner, without any manipulation of the data (or drawings). 2. The statement "Reprinted from the Online Certifications Directory with permission from UL" must appear adjacent to the extracted material. In addition, the reprinted material must include a copyright notice in the following format: "© 2013 UL LLC".

CRSA
649 E. South Temple
Salt Lake City, UT 84102
801.355.5915

MWL
11798 N. Lakeridge Pkwy.
Ashland, VA 23005
804-228-7473

State of Utah
Department of Administrative Services
Division of Facilities Construction & Management
4110 State Office Building
Salt Lake City, Utah 84114
Phone: (801) 538 - 3018
Fax: (801) 538 - 3267

DIVISION OF FACILITIES CONSTRUCTION AND MANAGEMENT
REVIEWED FOR CODE COMPLIANCE
SIGNATURE: Ernie Galyo
DATE: 08-05-2014

STATE OF UTAH #134096 MEHRDAD SAMIE LICENSED ARCHITECT
04-28-2014
ARCHITECT-ENGINEER STAMP

Unified State Laboratory Module 2
4451 South 2700 West, Taylorsville, UT 84118

DFCM #: 13020300
Project #: B13-024

DATE:	ISSUE TYPE:
APRIL 21, 2014	BID SET
CHECKED BY	J. NIELSEN
DRAWN BY	F. PITORE

UL DETAILS

GF005
VOLUME 1

C:\Users\fernando\Documents_A_13024_Modl_2013_fernando.rvt
7/14/2014 1:11:33 PM

System No. CEJ 127 P (HI/JS 120-05)

PERIMETER FIRE BARRIER SYSTEM - ASTM E 2307

	CP 672 SPEED SPRAY	CP 672 FAST CURE	CFS-SP WB
F-RATING	2-HR.	2-HR.	2-HR.
T-RATING	2-HR.	1 1/2-HR.	2-HR.

CYCLING - CLASS IV - ASTM E 1399/ASTM E 2307
RATED FOR ±6.25% VERTICAL SHEAR MOVEMENT @ 25% COMPRESSION (REFERENCE : ITEM 3A)

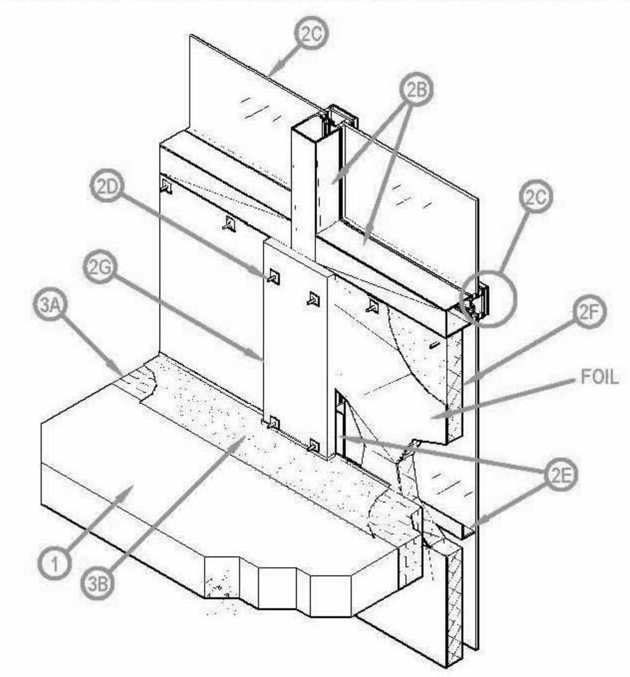

1. CONCRETE FLOOR ASSEMBLY: Max. two-hour rated concrete floor assembly made from either lightweight or normal weight concrete with a density of 100-150 pcf, with a min. thickness of 4-1/2-in. at the joint face. Overall slab thickness may vary to accommodate various blockout depths (longitudinal recesses) formed in the concrete, to house the architectural cover plate. The blockout width may also vary without restriction.
2. CURTAIN WALL ASSEMBLY: Incorporate the following features:
   A. Mounting Attachment: (Not shown) Attach the curtain wall framing to the structural framing in accordance to the curtain wall manufacturer's instructions. When required, connect the mounting attachments to the joint face of the floor slab, in accordance to the curtain wall manufacturer's instructions. Max. distance between mounting attachments is 10 feet.
   B. Aluminum Framing: Size rectangular aluminum tubing mullions and transoms according to the curtain wall system manufacturer's guidelines. Min. overall dimensions of framing required is 0.100 in. thick aluminum with a min. 3-3/4 in. height and a min. of 2-1/2 in. width of the extrusion. Mullion and Transom covers are added to the external side of the framing, giving the framing system a total mulliondepth of nom. 5-1/4 in. (with cover plate). Mullions are to be spaced a min. 60 in. o.c. and spandrel transoms are to be spaced a min. 45 in. o.c. Spandrel transoms are to be located at a min. height 20 in. above the top surface of the concrete floor assembly (as measured from the bottom of the transom).
   C. Glass Panels: Size and install glass panels to curtain wall framing according to the curtain wall system manufacturer's guidelines. Use min. 1/4 in. thick clear, heat-strengthened (HS) glass with a max. width and height less than the aluminum framing o.c. spacing, which allows the glass to be secured between the notched shoulder of the aluminum framing and pressure bar. Secure panels with a thermal break (rubber extrusion), pressure bar (aluminum extrusion), min. 1/4-20 x 5/8 in. long screws, and a snap face (aluminum extrusion).
   D. Impaling Pins: Size and install min. 12 GA steel pins according to the curtain wall system manufacturer's guidelines, or be a min. 1/2 in. longer than the thickness of the curtain wall insulation. Attach pins to clip angles with typical clip dimensions of: nom. 2 in. by 2 in., constructed with 20 GA galvanized sheet steel. Secure the clips to the aluminum framing with No. 10 self-tapping sheet metal screws. Install a min. of 1 screw per clip angle. Space pins max. of 12 in. o.c on the vertical framing members and a max. of 20 in.
   o.c on the horizontal framing member above the slab. The interior face of the curtain wall insulation is to be installed so that it is flush with the interior face of the framing.
   E. Reinforcing Angle: Mount a min. 1-1/2 in. x 1-1/2 in. x 20 GA galvanized steel angle to the inside of the vertical framing members so that the vertical leg serves as a backer to the exterior face of the curtain wall insulation and the horizontal leg extends away from the curtain wall insulation. Locate the reinforcing angle at the elevation of the centerline of the perimeter joint treatment. Size the angle 12 in. longer than the span between the interior edges of the vertical framing members and form the angle so that it has a 6 in. vertical leg on each end. Secure the 6 in. leg to the framing member on each side with three No. 10 steel self-tapping sheet metal screws placed in a triangular fashion with a max. spacing of 2 in. o.c.
   F. Curtain Wall Insulation: Install nom. 2 in. thick 8 pcf density mineral wool batt insulation faced on one side with aluminum foil scrim (vapor retarder), which is exposed to the room interior. Secure with angle clips and impaling pins (Item 2D). Seal all meeting edges of insulation with nom. 4-in. wide pressure sensitive aluminum foil faced tape centered over the junction so that approx. 2 in. of tape covers each edge of the adjacent insulation. The interior face of the batt insulation is, if required compressed, flush with the interior face of the curtain wall framing creating a min. 1-in. air space between the insulation and the glass. Listed Manufacturer: Only Intertek Certified Mineral Wool Manufacturer's product meeting the above minimum requirements.
   G. Framing Covers: Install nom. 1-in. thick, 8 in. wide strips of 8 pcf density mineral wool batt insulation faced on one side with aluminum foil scrim (vapor retarder), which is exposed to the room interior. Center framing covers over each vertical framing member and secured to the member with impaling pins and clips (Item 2D) spaced a min. 1-in. from both edges, and a max 12 in. o.c. Framing covers below the perimeter joint treatment are nom. 2 in. thick, and those above the perimeter joint treatment are nom. 1 in. thick. Framing covers do not pass through the perimeter joint treatment. They are butted to the top and bottom surfaces of the perimeter joint treatment. Listed Manufacturer: Only Intertek Certified Mineral Wool Manufacturer's product meeting the above minimum requirements.
3. PERIMETER JOINT PROTECTION: The perimeter joint (linear opening) is not to exceed nom. 6 in. joint width (joint width at installation). Incorporate the following construction features:
   A. Packing Material: Install min. 4 in. thick, 4 pcf density, mineral wool batt insulation** with the fibers running parallel to the slab edge and curtain wall. Compress the packing material 25% in the nominal joint width. Compress the batt insulation into the perimeter joint such that the top surface of the batt insulation is flush with the top surface of the concrete floor slab and its mid depth is compressed against the interior surface of the curtain wall insulation (Item 2F) which is supported by the 20 GA steel reinforcing angle (Item 2E). Splices (butt joints) in the lengths of mineral wool batt insulation are to be tightly compressed together. Listed Manufacturer: Only Intertek Certified Mineral Wool Manufacturer's product meeting the above minimum requirements.
   B. CERTIFIED MANUFACTURER: Hilti, Inc.
   CERTIFIED PRODUCT: Joint Spray or Sealant
   MODEL: CP 672 Speed Spray or CP 672 Fast Cure or CFS-SP WB Firestop Joint Spray
   Fill, Void or Cavity Material: To be applied (sprayed, brushed, or troweled) to cover the top exposed surface of the mineral wool installed in the perimeter joint. Apply a min. wet film thickness of 1/8 in. and overlap the CP 672 Speed Spray or CP 672 Fast Cure a min. 1/2 in. onto the adjacent wall curtain wall assembly and the concrete floor assembly. If spraying process is stopped and the applied material cures to an elastomeric film before the process is restarted, then overlap the edge of the cured material at least 1/8 in. with the spray.

** Before testing, the test specimen was cycled 500 times at 30 cpm in accordance to ASTM E 1399.

HILTI
Hilti Firestop Systems

Reproduced by HILTI, Inc.
Courtesy of Intertek Group
November 08, 2010

Intertek

Design No. CEJ 245 P (HI/BP 135-01)

PERIMETER FIRE BARRIER SYSTEM
Hilti, Inc.
ASTM E 2307

	CP 672 Speed Spray	CP 672 Fast Cure	CFS-SP WB
F-Rating	2-1/4 hr	2-1/4 hr	2-1/4 hr
T-Rating	2-1/4 hr	1-1/2 hr	2-1/4 hr

L-Rating N/A
Rated for ± 12.5% movement

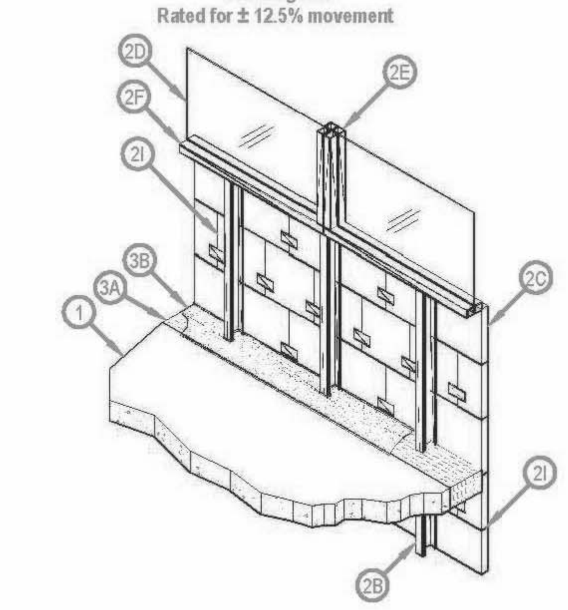

1. CONCRETE FLOOR ASSEMBLY: Two-hour rated concrete floor assembly made from either lightweight or normal weight concrete with a density of 100-150 pcf, with a min. thickness of 4-1/2-in. at the joint face. Overall slab thickness may vary to accommodate various blockout depths (longitudinal recesses) formed in the concrete, to house the architectural cover plate. The blockout width may also vary without restriction.
2. CURTAIN WALL ASSEMBLY: The concrete curtain wall assembly shall incorporate the following construction features:
   A. Mounting Attachment: (Not Shown) Attachment of the curtain wall framing to the structural framing shall be according to the curtain wall manufacturer's instructions. If required, mounting attachments to the floor slab shall be connected to the joint face of the floor slab. Max. distance between mounting attachments shall be 10 feet.
   B. Steel-Stud Framing: Vertical framing members shall be a min. 3-5/8 in. by 1-5/8 in., 18 GA steel "C" studs. Attachment shall be according to the curtain wall system manufacturer's guidelines. Vertical framing not to exceed a spacing of 56 in. o.c. and shall be completely covered by the concrete panels. If required, horizontal framing members shall be installed according to the curtain wall system manufacturer's guidelines.
   C. Concrete Panels: Any non-combustible exterior concrete based panel. Panels shall not be less than 1-1/2 in. thick, 12 in. high or 12 in. long. Attachment to the framing shall be according to the curtain wall system manufacturer's guidelines.
   D. Glass Vision Panels: Glass vision panels shall be at least 35-1/2 in. above the top surface of the floor assembly. Glass vision panels shall be installed to curtain wall framing according to the curtain wall system manufacturer's guidelines. Use a min. 1/4 in. thick, clear tempered glass with a max. width of 59 in. and height of 71 in.
   E. Window Gaskets: Secure glass vision panels with a thermal break (thermal-set rubber extrusion).
   F. Window Framing: Steel framing members shall be a min. 3-5/8-in. by 1-5/8-in. 18 GA steel "U" channel or similar construction that is compatible with steel-stud framing (2b). Locate window framing at least 35 in. above the top surface of the floor assembly.
   G. Impaling Pins: (Not Shown - Optional) When required by insulation manufacturer, use with insulation. The pins shall be located, sized and installed according to the curtain wall system manufacturer's guidelines.
   H. Curtain Wall Insulation: (Not Shown - Optional) When curtain wall insulation is used, the perimeter joint treatment must be installed before the insulation. Insulation may be butted to top and bottom of perimeter joint treatment but not deform the perimeter joint treatment. Either mineral wool** or fiberglass batt insulation** may be used. (** Listed with Intertek)
   I. Concrete Panel Joint: Vertical and horizontal concrete panel joints created between panels can be either flush type (butt joint) or key way type (tongue and groove). Concrete panel edges must be in contact with each other. If required, the surface of the panel joints can be sealed with gaskets or sealants.
   J. Framing Covers: (Not Shown - Optional) Framing covers used over the mullions and transoms are optional. When used, the framing covers shall be located, sized and installed according to the curtain wall system manufacturer's guidelines. Framing covers do not pass through the perimeter joint treatment. They are butted to the top and bottom surfaces of the perimeter joint treatment without deforming it. Either mineral wool** or fiberglass batt insulation** may be used. (** Listed with Intertek)
3. PERIMETER JOINT PROTECTION: The perimeter joint (linear opening) shall not exceed an 8 in. nom. joint width (joint width at installation) and the perimeter joint treatment shall incorporate the following construction features:
   A. Packing Material: Use a min. 4 in. thick, 4 pcf density, mineral wool batt insulation** installed with the fibers running parallel to the slab edge and curtain wall. (**Listed with Intertek) The packing material shall be compressed 50% in the nominal joint width. Compress the batt insulation into the perimeter joint such that the top surface of the batt insulation is flush with the top surface of the concrete floor slab. Splices (butt joints) in the lengths of mineral wool batt insulation are to be tightly compressed together. Reference the Introduction to Fire Resistive Joint Systems Section of this Directory for more details on how to determine the cut width of the insulation to be installed in the nominal joint width, and how to determine the compressed percentage of a known insulation width installed in a known nominal joint width.
   B. CERTIFIED MANUFACTURER: Hilti, Inc.
   CERTIFIED PRODUCT: Joint Spray or Sealant
   MODEL: CP 672 Speed Spray or CP 672 Fast Cure or CFS-SP WB Firestop Joint Spray
   Fill, Void or Cavity Material: To be applied, (sprayed, brushed, or painted) to cover the exposed surface of the mineral wool installed in the perimeter joint. Apply a min. 1/8-in. wet film thickness, which must become a min. 1/16-in. dry film thickness, and overlap the material a min. 1/2 in. onto the adjacent curtain wall assembly and concrete floor slab assembly. If the spraying process is stopped and the applied liquid cures to an elastomeric film before process is restarted, then overlap the edge of the cured material at least 1/8 in. with the spray. Reference Product Section of this Directory for more details about the Listed product.
   C. Support Clips: (Not Shown – Optional) Use standard Z-shaped clips that are min. 20 GA galvanized steel with the following nom. dimensions: 1 in. wide by 3 in. high with a 2 in. upper leg and 3 in. lower leg.

** Cycling: Before testing, the spliced, test specimen was cycled 500 times at 30 cpm in accordance with ICBO ES AC 30 (Jan. 1997) and ASTM E 1966.

HILTI
Hilti Firestop Systems

Reproduced by HILTI, Inc.
Courtesy of Intertek Group
February 13, 2012

Intertek

System No. CEJ 246 P (HI/BP 120-01)

PERIMETER FIRE BARRIER SYSTEM - ASTM E 2307

	CP 672 SPEED SPRAY	CP 672 FAST CURE	CFS-SP WB
F-RATING	2-HR.	2-HR.	2-HR.
T-RATING	1 1/4-HR.	3/4-HR.	1 1/4-HR.

Rated for ± 15% Movement

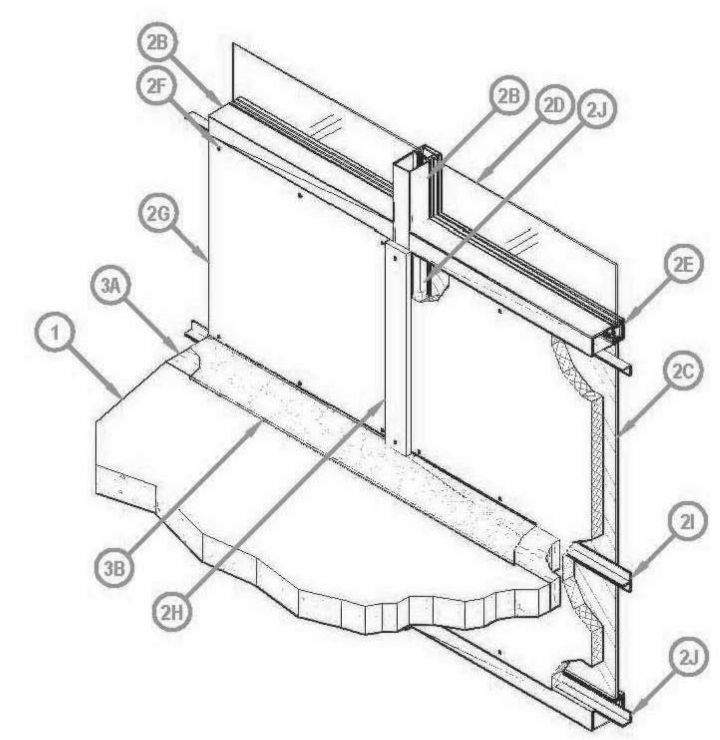

1. FLOOR ASSEMBLY: Two-hour rated concrete floor assembly made from either lightweight or normal weight concrete with a density of 100-150 pcf, with a min. thickness of 4-1/2-in. at the joint face. Overall slab thickness may increase to accommodate various blockout depths (longitudinal recesses) formed in the concrete, to house an architectural cover plate. The blockout width may also vary without restriction.
2. CURTAIN WALL ASSEMBLY: The curtain wall assembly shall incorporate the following construction features:
   A. Mounting Attachment: (Not shown) Attachment of the curtain wall framing to the structural framing is required at each floor. The mounting attachments to the floor slab shall be either to the top surface of the floor slab or the joint face of the floor slab, according to the curtain wall manufacturer's instructions. The distance between mounting attachments shall be a min. 60 in. o.c. The mounting attachments shall be steel.
   B. Aluminum Framing: Rectangular aluminum tubing mullions and transoms, sized according to the curtain wall system manufacturer's guidelines. Min. overall dimensions of framing required is 0.100 in. thick aluminum with a min. 5-1/4 in. height and a min. of 2-1/2 in. width of the extrusion. Mullions are to be spaced a min. 60 in. o.c. and transoms are to be spaced a min. 72 in. o.c. Transoms are to be located at a min. height of 33 in. above the top surface of the concrete floor assembly (as measured from the bottom of the transom).
   C. Glass Spandrel Panels: Glass spandrel panels shall be installed to curtain wall framing according to the curtain wall system manufacturer's guidelines. Use a min. 1/4 in. thick, clear tempered glass with a max. width of 59 in. and height of 71 in.
   D. Glass Vision Panels: Glass vision panels shall be at least 35-1/2 in. above the top surface of the floor assembly and installed to curtain wall framing according to the curtain wall system manufacturer's guidelines. Same min. requirements as in 2C.
   E. Secure panels with a thermal break (thermal-set rubber extrusion), pressure bar (aluminum extrusion), 1/4-20 x 5/8 in. long screws, and a snap face (aluminum extrusion). The spandrel panels shall be insulated according to 2G.
   F. Impaling Pins: When pins are used instead of screws, locate pins in the same manner as the screws in 2F, sized and installed according to the curtain wall system manufacturer's guidelines, or be a min. 4-1/2 in. long, 12 GA steel pin attached to a nom. 2 in. by 2 in. galvanized sheet steel plate, a nom. 2 by 2 by 2 in. long angle, or directly attached to the framing using a stud gun. Space pins a max. of 12 in. o.c. and install around the periphery so that the interior face of the curtain wall insulation is flush with the interior face of the framing.
   G. Curtain Wall Insulation: Insulate all spandrel panels with a min. 2 in. thick, 8 pcf, mineral wool batt insulation** faced on one side with aluminum foil scrim (vapor retarder) which is exposed to the room interior. (** Listed with Intertek) Tightly fit insulation between vertical framing members, and secure with screws placed a max. 8 in. o.c. attached to perimeter spandrel angles (2j). Locate horizontal seam at the mid-height of the perimeter joint protection (3). All other horizontal seams in the insulation are to be at least 6 in. from the top surface of the perimeter joint treatment. The interior face of the batts is flush with the interior face of the curtain wall framing. A min. 2-in. air space is created between the glass and the insulation. The 36-in. wide batts shall be installed without vertical seams, spanning the full length between the vertical and horizontal curtain wall framing members, which create the spandrel panel area.
   H. Framing Covers: Make strips of min. 1 in. thick by 4 in. wide, 8 pcf, mineral wool batt insulation** faced on one side with aluminum foil scrim (vapor retarder), which is exposed to the room interior. (**Listed with Intertek) Center framing covers over each vertical framing member and secured to the member with impaling pins and clips spaced max. 12 in. o.c. Do not pass framing covers through the perimeter joint protection (3). Butt framing covers to the top and bottom surfaces of the perimeter joint protection (3). Seal the sides of the mullion covers with aluminum foil tape flared min. 1 in. onto curtain wall insulation (2G).
   I. Reinforcing Angle: At the horizontal butt joints of the insulation in the field of the glass spandrel panels (2C), place two 20 GA steel angles back to back to form a "T". Locate the "T" reinforcing angle at the horizontal centerline of the perimeter joint protection and secure the "T" angle to the perimeter spandrel angles (2J).
   J. Perimeter Spandrel Angles: Use a min. 16 GA 1-1/2 x 1-1/2 steel angles around the entire perimeter of spandrel window area. Attach the vertical angles to the mullions with screws. Attach the horizontal angles to the vertical angles with secures.
3. PERIMETER JOINT PROTECTION: The perimeter joint (linear opening) shall not exceed 8 in. nom. Joint width (joint width at installation) and the perimeter joint treatment shall incorporate the following construction features:
   A. Packing Material: Use a min. 4 in. thick, 4 pcf density, mineral wool batt insulation** installed with the fibers running parallel to the slab edge and curtain wall. (** Listed with Intertek) The packing material shall be compressed 33% in the nominal joint width. Compress the batt insulation into the perimeter joint such that the top surface of the batt insulation is flush with the top surface of the concrete floor slab. Splices (butt joints) in the lengths of mineral wool batt insulation are to be tightly compressed together. Reference the Introduction to Fire Resistive Joint Systems Section of this Directory for more details on how to determine the cut width of the insulation to be installed in the nominal joint width, and how to determine the compressed percentage of a known insulation width installed in a known nominal joint width.

   B. CERTIFIED MANUFACTURER: Hilti, Inc.
   CERTIFIED PRODUCT: Joint Spray or Sealant
   MODEL: CP 672 Speed Spray or CP 672 Fast Cure or CFS-SP WB Firestop Joint Spray
   Fill, Void or Cavity Material: To be spray applied to cover the exposed surface of the mineral wool installed in the perimeter joint. Apply a min. 1/8-in. wet film thickness, which must become a min. 1/16-in. dry film thickness, and overlap the material a min. 1/2 in. onto the adjacent curtain wall assembly and concrete floor slab assembly. If the spraying process is stopped and the applied liquid cures to an elastomeric film before process is restarted, then overlap the edge of the cured material at least 1/8 in. with the spray. Reference Product Section of this Directory for more details about the Listed product.
   C. Support Clips: (Not Shown) Support clips are optional but recommended for installations subject to vertical shear movement. Standard Z shaped clips are 20 GA galvanized steel with the following dimensions: 1 in. wide by 3 in. high with a 2 in. upper leg and 3 in. lower leg.

**Cycling: Before testing, the spliced, test specimen was cycled 500 times at 30 cpm in accordance with ICBO ES AC 30 (Jan. 1997) and ASTM E 1966.

HILTI
Hilti Firestop Systems

Reproduced by HILTI, Inc.
Courtesy of Intertek Group
March 17, 2011

Intertek

Design No. CEJ 259 P (HI/BP 120-08)

PERIMETER FIRE BARRIER SYSTEM
Hilti, Inc.
ASTM E 2307

	CP 672 Speed Spray	CP 672 Fast Cure	CFS-SP WB
F-Rating	2 hr	2 hr	2 hr
T-Rating	1 hr	45 min	1 hr

L-Rating <1.0 SCFM/LF
Rated for ± 7.5% movement

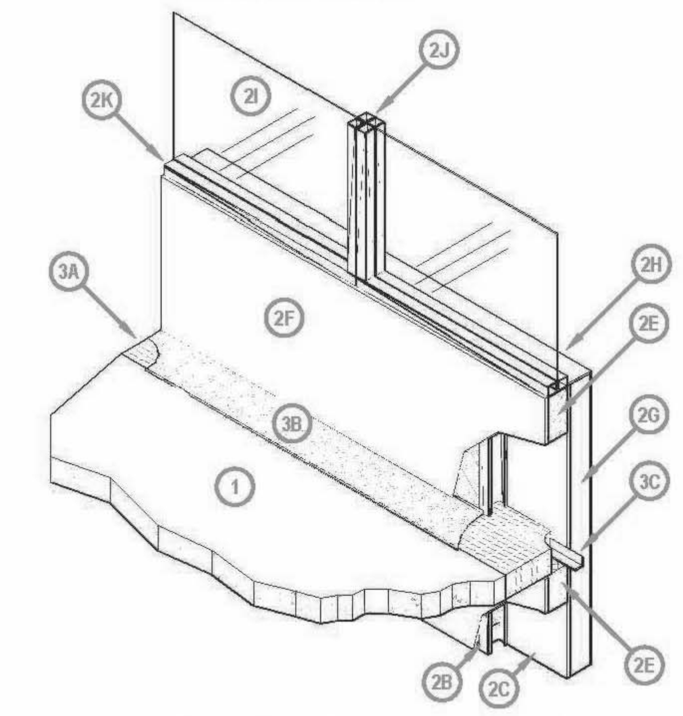

1. CONCRETE FLOOR ASSEMBLY: Two-hour rated concrete floor assembly made from either lightweight or normal weight concrete with a density of 100-150 pcf, with a min. thickness of 4-in. at the joint face. Overall slab thickness may vary to accommodate various blockout depths (longitudinal recesses) formed in the concrete, to house the architectural cover plate. The blockout width may also vary without restriction.
2. CURTAIN WALL ASSEMBLY: The curtain wall assembly shall incorporate the following construction features:
   A. Mounting Attachment: (Not shown) Attachment of the curtain wall framing to the structural framing shall be according to the curtain wall manufacturer's instructions. When required, the mounting attachments to the floor slab shall be connected to the joint face of the floor slab, according to the curtain wall manufacturer's instructions. Max. distance between mounting attachments shall be 10 feet.
   B. Steel-Stud Framing: Vertical framing members shall be a min. 3-5/8 in. by 1-5/8 in. 18 GA steel "C" studs secured in an 18 GA steel track top and bottom using #6 x 1.25-inch Bugle head SD PT screws. Vertical framing shall not exceed a spacing of 24 in. o.c.
   C. Sandwiched Wall Surface: Use a min. 1/2 in. thick, 48 in. wide by 96 in. long, exterior grade gypsum wallboard (ASTM C 79), cement board, or fiberglass sheathed gypsum wallboard placed over and secured to framing with min. 1-1/4 in. long Type S drywall screws 8 in. o.c.
   D. Curtain Wall Insulation: (Optional – Not Shown) A faced or un-faced mineral wool or fiberglass** batt insulation installed in each stud cavity in accordance with manufacturer's instructions. (** Listed with Intertek)
   E. Barrier Insulation: Use a nom. 24-in wide by 4 in. thick min. 4 pcf faced or un-faced mineral wool** batt insulation cut to size as required. Install barrier insulation in each stud cavity so that min. 32-inches of barrier insulation is above the surface of the perimeter joint protection and a min. of 24-in. is below the perimeter joint protection. Barrier insulation length is min. 24-in. and fitted tightly between vertical framing members filling all studs. Seal all butt joints of barrier insulation with min. 4-in. wide aluminum foil faced tape. The curtain wall insulation shall completely fill the recess of the min. 3-5/8 in. by 1-5/8 in., 18 GA steel "C" studs. (** Listed with Intertek)
   F. Interior Curtain Wall Surface: Apply after Perimeter Joint Protection (3) is installed. Use a min. 1/2 in. thick, 48 in. wide by 96 in. long, Type X gypsum wallboard (ASTM C 36), placed over and secured to framing with #6 by 1-1/4-in. long Type S drywall screws 8 in. o.c. on the periphery and 12 in. o.c. in the field. Screw heads are covered with joint compound. Joints created between gypsum wallboard are taped and floated with joint compound. Gypsum wallboard only required to be continuously placed a min. 32 in. above surface of perimeter joint protection. Gypsum wallboard below the slab is optional.
   G. Exterior Curtain Wall Insulation: An Exterior Insulation Finish System (EIFS) is composed of expanded polystyrene foam (EPS) insulation, and a Exterior Curtain Wall Finish (2H). The EIFS system is a monolithic assembly without expansion or control joints. The EPS foam boards measure 24 inches wide by 48 inches long by 4 inches thick with a nominal density of 1 pcf. The EPS foam is attached to the sandwiched wall surface using mechanical fasteners or an adhesive in accordance with manufacturer's recommendations. Install the EPS boards in a running bond (brick-like) pattern and staggered over sandwiched wall surface (2C) joints. Apply pressure to the EPS boards to assist in the bonding process. All EPS boards must be butted together with no gaps or voids between them. Allow a minimum of 12 hours before continuing the application process when using adhesive. The EPS boards must be rasped to remove all irregular seams and establish a continuous flat surface.
   H. Exterior Curtain Wall Finish: The cementitious base coat and reinforcing mesh is applied over the Exterior Curtain Wall Insulation (2G). Precut the mesh as needed. The mesh is a woven fiberglass reinforcement fabric that is compatible with the cementitious base coat and finish coat materials. Apply 1/16 to 1/8-inch thick cementitious base coat to the exposed surface of the EPS foam. Apply the mesh; embed the mesh into the cementitious base coat using a trowel. Start at the middle and work outwards towards edges. The final thickness of the cementitious base coat with the mesh embedded should be approximately1/16-inches. Let the cementitious base coat dry completely before applying the cementitious finish coat. The cementitious finish coat is a cement based wall coating which may contain silica sand or marble aggregates. Apply the cementitious finish coat using a trowel in the same manner as the cementitious base coat.
   I. Glass Vision Panels: Glass vision panels shall be a min. 35-1/2 in. above the top surface of the floor assembly. Glass vision panels shall be installed to curtain wall framing according to the curtain wall system manufacturer's guidelines. Use a min. 1/4 in. thick, clear tempered glass with a nom. width of 59 in. and height of 71 in.
   J. Window Gaskets: Secure glass vision panels with a thermal break (thermal-set rubber extrusion).
   K. Window Framing: Steel framing members shall be a min. 3-5/8-in. by 1-5/8-in. 18 GA steel "U" channel or similar construction that is compatible with steel-stud framing (2b). Locate window framing at least 35 in. above the top surface of the floor assembly.
3. PERIMETER JOINT PROTECTION: The perimeter joint (linear opening) shall not exceed an 8- in. nom. joint width (joint width at installation) and the perimeter joint treatment shall incorporate the following construction features:
   A. Packing Material: Use a min. 4 in. thick, 4 pcf density, mineral wool** batt insulation installed with the fibers running parallel to the slab edge and curtain wall. The packing material shall be compressed 33% in the nominal joint width. Compress the batt insulation into the perimeter joint such that the top surface of the batt insulation is flush with the top surface of the concrete floor slab. Splices (butt joints) in the lengths of mineral wool batt insulation are to be tightly compressed together, min. compression 0.25-in. per piece. Notch packing material to receive support angle (3C) so that packing material is in contact with Sandwiched Wall Surface (2C). Reference the Introduction to Fire Resistive Joint Systems Section of this Directory for more details on how to determine the cut width of the insulation to be installed in the nominal joint width, and how to determine the compressed percentage of a known insulation width installed in a known nominal joint width. (** Listed with Intertek)
   B. CERTIFIED MANUFACTURER: Hilti, Inc.
   CERTIFIED PRODUCT: Joint Spray or Sealant
   MODEL: CP 672 Speed Spray or CP 672 Fast Cure or CFS-SP WB Firestop Joint Spray
   Fill, Void or Cavity Material: To be applied (sprayed, Brushed, or painted) to cover the exposed surface of the mineral wool installed in the perimeter joint. Apply a min. 1/8-in. wet (min. 1/16-in. dry) film thickness and overlap the material a min. 1/2 in. onto with Barrier Insulation (2E) and Concrete Floor Assembly (1). If the spraying process is stopped and the applied liquid cures to an elastomeric film before process is restarted, then overlap the edge of the cured material at least 1/8 in. with the spray. Reference Product Section of this Directory for more details about the Listed product.
   C. Support Angle: Standard 1-1/2 x 1-1/2-in. min. 20 GA galvanized steel angle attached between all studs with self tapping self drilling screws. Set angle at mid height of Packing Material (3A).
   D. Support Clips: (Not Shown) Support clips are optional but recommended for installations subject to vertical shear movement. Standard Z-shaped clips are 20 GA galvanized steel with the following dimensions: 1 in. wide by 3 in. high with a 2 in. upper leg and 3 in. lower leg.

** Before testing, the spliced, test specimen was cycled 500 times at 30 cpm according to ASTM E 1399 and ICBO ES AC 30 (Jan. 1997).

HILTI
Hilti Firestop Systems

Reproduced by HILTI, Inc.
Courtesy of Intertek Group
February 13, 2012

Intertek

CRSA

649 E. South Temple
Salt Lake City, UT 84102
801.355.5915

MWL

11798 N. Lakeridge Pkwy.
Ashland, VA 23005
804-228-7473

State of Utah
Department of Administrative Services

DFCM
Division of Facilities
Construction & Management
4110 State Office Building
Salt Lake City, Utah 84114
Phone: (801) 538 - 3018
Fax: (801) 538 - 3267

ARCHITECT-ENGINEER STAMP

Unified State Laboratory Module 2

4451 South 2700 West,
Taylorsville, UT 84118

DFCM #:	13020300
Project #:	B13-024

DATE:	ISSUE TYPE:
APRIL 21, 2014	BID SET
CHECKED BY	J. NIELSEN
DRAWN BY	F. PITORE

UL DETAILS

GF006

VOLUME 1

C:\Users\fernando\Documents\A_13024_ModII_2013_fernando.rvt
7/14/2014 1:11:39 PM

System No. CEJ 263 P (HI/PHV 120-09)

PERIMETER FIRE BARRIER SYSTEM - ASTM E 2307

	CP 672 SPEED SPRAY	CP 672 FAST CURE	CFS-SP WB
F-RATING	2-HR.	2-HR.	2-HR.
T-RATING	1-HR.	3/4-HR.	1-HR.

L-RATING < 1 SCFM/LF
Rated for ± 7.5% Movement

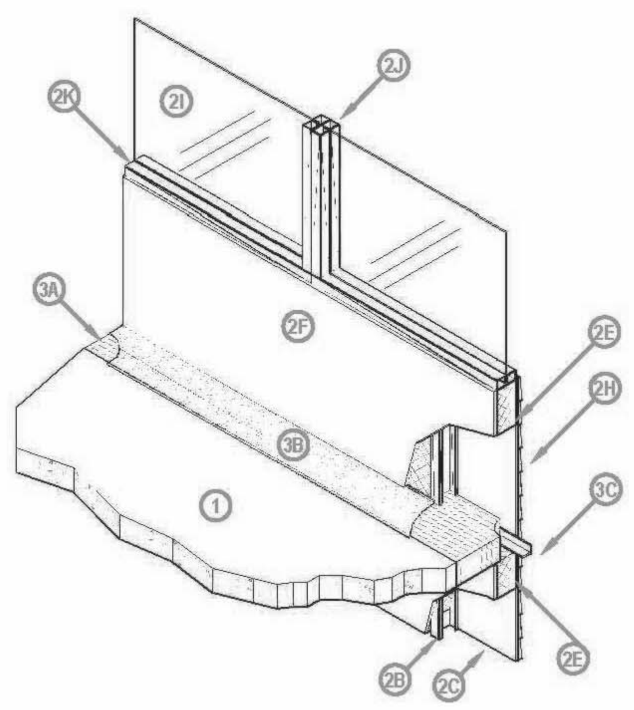

1. CONCRETE FLOOR ASSEMBLY: Two-hour rated concrete floor assembly made from either lightweight or normal weight concrete with a density of 100-150 pcf, with a min. thickness of 4-in. at the joint face. Overall slab thickness may vary to accommodate various blockout depths (longitudinal recesses) formed in the concrete, to house the architectural cover plate. The blockout width may also vary without restriction.
2. CURTAIN WALL ASSEMBLY: The curtain wall assembly shall incorporate the following construction features:
   A. Mounting Attachment: (Not shown) Attachment of the curtain wall framing to the structural framing shall be according to the curtain wall manufacturer's instructions. When required, the mounting attachments to the floor slab shall be connected to the joint face of the floor slab, according to the curtain wall manufacturer's instructions. Max. distance between mounting attachments shall be 10 feet.
   B. Steel-Stud Framing: Vertical framing members shall be a min. 3-5/8 in. by 1-5/8 in. 18 GA steel "C" studs secured in an 18 GA steel track top and bottom using #6 x 1.25-inch Bugle head SD PT screws. Vertical framing shall not exceed a spacing of 24 in. o.c.
   C. Sandwiched Wall Surface: Use a min. 1/2 in. thick, 48 in. wide by 96 in. long, exterior grade gypsum wallboard (ASTM C 79), cement board, or fiberglass sheathed gypsum wallboard placed over and secured to framing with min. 1-1/4 in. long Type S drywall screws 8 in. o.c.
   D. Curtain Wall Insulation: (Optional – Not Shown) A faced or un-faced mineral wool or fiberglass** batt insulation installed in each stud cavity in accordance with manufacturer's instructions. (** Listed with Intertek)
   E. Barrier Insulation: Use a nom. 24-in wide by 4 in. thick min. 4 pcf faced or un-faced mineral wool** batt insulation cut to size as required. Install barrier insulation in each stud cavity so that min. 32-inches of barrier insulation is above the surface of the perimeter joint protection and a min. of 24-in. is below the perimeter joint protection. Barrier insulation length is min. 24-in. and fitted tightly between vertical framing members filling all studs. Seal all butt joints of barrier insulation with min. 4-in. wide aluminum foil faced tape. The curtain wall insulation shall completely fill the recess of the min. 3-5/8 in. by 1-5/8 in., 18 GA steel "C" studs. (** Listed with Intertek)
   F. Interior Curtain Wall Surface: Apply after Perimeter Joint Protection (3) is installed. Use a min. 1/2 in. thick, 48 in. wide by 96 in. long, Type X gypsum wallboard (ASTM C 36), placed over and secured to framing with #6 by 1-1/4-in. long Type S drywall screws 8 in. o.c. on the periphery and 12 in. o.c. in the field. Screw heads are covered with joint compound. Joints created between gypsum wallboard are taped and floated with joint compound. Gypsum wallboard only required to be continuously placed a min. 32 in. above surface of perimeter joint protection. Gypsum wallboard below the slab is optional.
   G. Exterior Curtain Wall Insulation: (Optional -Not Shown) An expanded polystyrene foam (EPS) insulation. The EPS foam boards measure 24 inches wide by 48 inches long by 4 inches thick with a nominal density of 1 pcf. The EPS foam is attached to the sandwiched wall surface using mechanical fasteners or an adhesive in accordance with manufacturer's recommendations. Install the EPS boards in a running bond (brick-like) pattern and staggered over sandwiched wall surface (2C) joints. Apply pressure to the EPS boards to assist in the bonding process. All EPS boards must be butted together with no gaps or voids between them. Allow a minimum of 12 hours before continuing the application process when using adhesive. The EPS boards must be rasped to remove all irregular seams and establish a continuous flat surface.
   H. Exterior Curtain Wall Finish: Use cementitious, aluminum or steel siding of any type. Install per manufacturer's instructions. Secure siding to wall assembly using conventional acceptable fastening techniques.
   I. Glass Vision Panels: Glass vision panels shall be a min. 35-1/2 in. above the top surface of the floor assembly. Glass vision panels shall be installed to curtain wall framing according to the curtain wall system manufacturer's guidelines. Use a min. 1/4 in. thick, clear tempered glass with a nom. width of 59 in. and height of 71 in.
   J. Window Gaskets: Secure glass vision panels with a thermal break (thermal-set rubber extrusion).
   K. Window Framing: Steel framing members shall be a min. 3-5/8-in. by 1-5/8-in. 18 GA steel "U" channel or similar construction that is compatible with steel-stud framing (2b). Locate window framing at least 35 in. above the top surface of the floor assembly.
3. PERIMETER JOINT PROTECTION: The perimeter joint (linear opening) shall not exceed an 8- in. nom. joint width (joint width at installation) and the perimeter joint treatment shall incorporate the following construction features:
   A. Packing Material: Use a min. 4 in. thick, 4 pcf density, mineral wool** batt insulation installed with the fibers running parallel to the slab edge and curtain wall. The packing material shall be compressed 33% in the nominal joint width. Compress the batt insulation into the perimeter joint such that the top surface of the batt insulation is flush with the top surface of the concrete floor slab. Splices (butt joints) in the lengths of mineral wool batt insulation are to be tightly compressed together, min. compression 0.25-in. per piece. Notch packing material to receive support angle (3C) so that packing material is in contact with Sandwiched Wall Surface (2C). Reference the Introduction to Fire Resistive Joint Systems Section of this Directory for more details on how to determine the cut width of the insulation to be installed in the nominal joint width, and how to determine the compressed percentage of a known insulation width installed in a known nominal joint width. (** Listed with Intertek)
   B. CERTIFIED MANUFACTURER: Hilti, Inc.
   CERTIFIED PRODUCT: Joint Spray or Sealant
   MODEL: CP 672 Speed Spray or CP 672 Fast Cure or CFS-SP WB Firestop Joint Spray
   Fill, Void or Cavity Material: To be applied (sprayed, Brushed, or painted) to cover the exposed surface of the mineral wool installed in the perimeter joint. Apply a min. 1/8-in. wet (min. 1/16-in. dry) film thickness and overlap the material a min. 1/2 in. onto with Barrier Insulation (2E) and Concrete Floor Assembly (1). If the spraying process is stopped and the applied liquid cures to an elastomeric film before process is restarted, then overlap the edge of the cured material at least 1/8 in. with the spray. Reference Product Section of this Directory for more details about the Listed product.
   C. Support Angle: Standard 1-1/2 x 1-1/2-in. min. 20 GA galvanized steel angle attached between all studs with self tapping self drilling screws. Set angle at mid height of Packing Material (3A).
   D. Support Clips: (Not Shown) Support clips are optional but recommended for installations subject to vertical shear movement. Standard Z-shaped clips are 20 GA galvanized steel with the following dimensions: 1 in. wide by 3 in. high with a 2 in. upper leg and 3 in. lower leg.

** Before testing, the spliced, test specimen was cycled 500 times at 30 cpm according to ASTM E 1399 and ICBO ES AC 30 (Jan 1997)

Hilti Firestop Systems

Reproduced by HILTI, Inc
Courtesy of Intertek Group
November 20, 2010

Intertek

PERIMETER FIRE BARRIER SYSTEM - ASTM E 2307

	CP 672 SPEED SPRAY	CP 672 FAST CURE	CFS-SP WB
F-RATING	3-HR.	3-HR.	3-HR.
T-RATING	1 3/4-HR.	1 1/4-HR.	1 3/4-HR.

L-RATING <1.0 SCFM/LF
RATED FOR ± 11.25% HORIZONTAL MOVEMENT (SEE NOTE 1)
RATED FOR ± 5% MOVEMENT

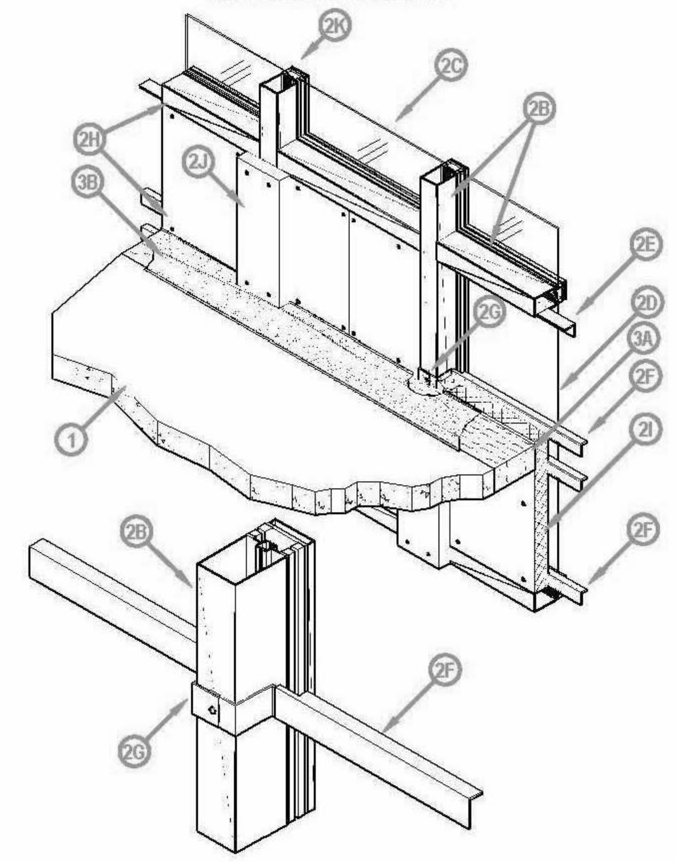

1. CONCRETE FLOOR ASSEMBLY: Two-hour rated concrete floor assembly made from either lightweight or normal weight concrete with a density of 100-150 pcf, with a min. thickness of 4-1/2-in. at the joint face. Overall slab thickness may vary to accommodate various blockout depths (longitudinal recesses) formed in the concrete, to house the architectural cover plate. The blockout width may also vary without restriction.
2. CURTAIN WALL ASSEMBLY: The curtain wall assembly shall incorporate the following construction features:
   A. Mounting Attachment: (Not shown) Attachment of the curtain wall framing to the structural framing shall be according to the curtain wall manufacturer's instructions to allow vertical shear movement only. When required, the mounting attachments to the floor slab shall be connected to the joint face of the floor slab, according to the curtain wall manufacturer's instructions. Max. distance between mounting attachments shall be 10 feet. One optional method is to use min. 8 in. wide by 3/4 in. thick extruded aluminum Halfen mullion mounting brackets with one nom. 2 in. high leg for support and attachment to the mullion and with one leg at least 6 in. longer than nominal joint width. Attach the mounting bracket to the top of the floor with two min 1/2 in. dia. steel masonry anchors in conjunction with washer plates supplied with the mounting brackets.
   B. Aluminum Framing: Rectangular aluminum tubing mullions and transoms, sized according to the curtain wall system manufacturer's guidelines. Min. overall dimensions of the extruded framing sections are 0.100 in. thick aluminum with a min. 5-1/4 in. depth and a min. of 2-1/2 in. width. Mullion and Transom covers are added to the external side of the framing, giving the framing system a total depth of min. 6-3/4 in. Mullions are to be spaced a min. 56-1/2 in. o.c. and transoms are to be spaced a min. 49 in. o.c. For the spandrel region, the lower transom must be placed a min. of 21 in. below the concrete floor (as measured from the underside of the floor to the top side of the transom) and the upper transom must be placed a minimum of 21-1/2 in. above the floor (as measured from the top surface of the floor to the underside of the transom) while maintaining the minimum 46-1/2 in. spandrel panel height. One optional fastening method is to space the mullions as noted herein and secure the mullion mounting anchors (Item 2A) at each floor level in conjunction with extruded aluminum clips bolted to the sides of the mullions and designed to engage the vertical leg of the Halfen mullion mounting bracket in conjunction with an extruded aluminum hook/leveling connector.
   C. Vision Glass Panels: Glass panels shall be sized and attached to curtain wall framing according to the curtain wall system manufacturer's guidelines. Use a min. 1/4 in. thick, clear heat-strengthened (HS) glass or tempered glass with a max. width and height less than the aluminum framing o.c. spacing, which allows the glass to be secured between the notched shoulder of the aluminum framing and pressure bar. Panels are secured with a thermal break (rubber extrusion), pressure bar (aluminum extrusion), min. 1/4-20 x 5/8 in. long screws, and a snap face (aluminum extrusion).
   D. Spandrel Panels: Either glass or aluminum spandrel panels may be applied to the spandrel exterior: If Glass Spandrel Panels: Glass panels shall be sized and installed to curtain wall framing according to the curtain wall system manufacturer's guidelines. Use a min. 1/4 in. thick clear, heat-strengthened (HS) glass or tempered glass with a max. width and height less than the aluminum framing o.c. spacing, which allows the glass to be secured between the notched shoulder of the aluminum framing and pressure bar. Panels are secured with a thermal break (rubber extrusion), pressure bar (aluminum extrusion), min. 1/4-20 x 5/8 in. long screws, and a snap face (aluminum extrusion). Aluminum Spandrel Panels: Aluminum panels used in the spandrel shall be sized and attached to curtain wall framing according to the curtain wall system manufacturer's guidelines. Use a min. 1/8 in. sheet aluminum panel.
   E. Insulation Retainer Angle: Secure a minimum 2 in. x 2 in. 20 GA galvanized steel angle to the underside of the top spandrel transom extending the full length of the transom between each vertical framing member. Position so that the curtain wall insulation (2I), when placed flush against the back surface of the angle, is flush with the internal surface of the vertical framing members. Secure the angle to the transom with min. 1 in. No. 10 self-tapping sheet metal screws spaced a maximum 12 in. o.c.
   F. Insulation Reinforcement Angle: Place min. 1 in. x 2 in. 20 GA galvanized steel angle horizontally in the spandrel area to reinforce the curtain wall insulation (2I). The 2 in. leg is placed flush against the exterior surface of the curtain wall insulation and the 1 in. dimension is positioned at the top of the 2 in. leg, perpendicular to and outward from the insulation as illustrated. Place a minimum of 3 angles in each spandrel cavity between vertical framing members. Two angles are required to be spaced a max. 6 in. o.c. in the perimeter fire barrier region, with the top angle centered 1 in. above the floor. Outside of the perimeter fire barrier region, the spacing of these reinforcement angles is a max. 18 in o.c. On both ends of each angle, cut the 1 in. leg of the angle 2 in. from the end and fold down to form a slot that is slid onto the flange of the Z-Clip (2G).
   G. Z Clips: Position min. 2 in. wide Z-Clips having 2 in. long web and flange dimensions, constructed of min. 18 GA. galvanized steel, onto the mullion at the required elevation locations of the Insulation Reinforcement Angles (2F). Two Z-Clips are to be positioned at each location so that one clip extends on each side of the mullion, placed tightly against the mullion. The Z-clips are secured to the interior face of the mullion with a single 1 in. No. 10 self-tapping sheet metal screw placed at the center of the Z-Clips.
   H. Insulation Retaining Screws: In the field of the curtain wall insulation between framing covers (2J) attach curtain wall insulation (2I) to the insulation retainer angle (2E) and insulation reinforcement angle (2F) with min. 3 in. long No. 8 bugle head self-tapping screws fitted with min. 11/2 in. diameter steel clinch shields or self-locking washer clips. These are spaced a max. 12-3/4 in. o.c. and a max. 4 in. on each side of vertical seams. Where the framing covers (2J) overlap onto the curtain wall insulation (2I) secure framing covers (2J) and curtain wall insulation (2I) to the insulation retainer angle (2E) and insulation reinforcement angle (2F) with min. 5 in. long No. 10 bugle head self-tapping screws and min. 1-1/2 in. diameter steel clinch shields or self-locking washer clips in accordance with details in 2J.
   I. Curtain Wall Insulation: A nom. 2 in. thick, 8pcf density mineral wool batt insulation**, faced on one side with aluminum foil scrim (vapor retarder) which faces the room interior, is installed to fill all cavities of the spandrel region between the framing. The batt is to be fitted tightly to the framing, and is secured to the Insulation Retainer Angle (2E) and Insulation Reinforcement Angle (2F) with Insulation Retaining Screws and min. 1-1/2 in. diameter steel clinch shields or self-locking washer clips. (2H). A minimum 3 in. air space is created between the insulation and panel. All meeting edges of insulation are sealed with nom. 4-in. wide pressure sensitive aluminum foil faced tape centered over the junction so that approx. 2 in. of tape covers each edge of the adjacent insulation. The 36 in. wide batts shall be installed with a maximum of 1 vertically oriented seam in each spandrel cavity, between vertical framing members, spaced a min. 18 in. from any vertical framing member, and continuous vertically without horizontal seams.
   J. Framing Covers: Strips made of 2 in. thick by 8 in. wide, 8 pcf, mineral wool batt insulation, faced one side with aluminum foil scrim (vapor retarder) which faces the room interior, are centered over each vertical framing member and secured to the Insulation Retainer Angle (2E) and Insulation Reinforcement Angle (2F) with Insulation Retaining Screws spaced 1 in. from both edges of the framing cover. Framing covers do not pass through the perimeter joint treatment. They are butted to the top and bottom surfaces of the perimeter joint treatment.
   K. Panel Attachment: Secure panels with a thermal break (thermal-set rubber extrusion), pressure bar (aluminum extrusion), 1/4-20 x 5/8 in. long screws, and a snap face (aluminum extrusion). The spandrel panels shall be insulated according to 2I.
3. PERIMETER JOINT PROTECTION: The perimeter joint (linear opening) shall not exceed an 8- in. nom. joint width (joint width at installation) and the perimeter joint treatment shall incorporate the following construction features:
   A. Packing Material: Use a min. 4 in. thick, 4 pcf density, mineral wool** batt insulation installed with the fibers running parallel to the slab edge and curtain wall. The packing material shall be compressed 33% in the nominal joint width. Compress the batt insulation into the perimeter joint such that the top surface of the batt insulation is flush with the top surface of the concrete floor slab. Splices (butt joints) in the lengths of mineral wool batt insulation are to be tightly compressed together with min. compression of 0.25-in. per piece. Reference the Introduction to Fire Resistive Joint Systems Section of this Directory for more details on how to determine the cut width of the insulation to be installed in the nominal joint width, and how to determine the compressed percentage of a known insulation width installed in a known nominal joint width.
   B. CERTIFIED MANUFACTURER: Hilti, Inc.
   CERTIFIED PRODUCT: Joint Spray or Sealant
   MODEL: CP 672 or CP 672 FC or CFS-SP WB Firestop Joint Spray
   Fill, Void or Cavity Material: To be applied (sprayed, brushed, or trowled) to cover the exposed surface of the mineral wool installed in the perimeter joint. Apply a min. 1/8-in. wet film thickness and overlap the material a min. 1/2 in. onto the adjacent curtain wall assembly and concrete floor slab assembly. If the spraying process is stopped and the applied liquid cures to an elastomeric film before process is restarted, then overlap the edge of the cured material at least 1/8 in. with the spray. Reference Product Section of this Directory for more details about the Listed product.
   Note 1 – Before testing, the spliced test specimen was cycled 500 times at 30 cpm according to ASTM E 1399 and ICBO ES AC 30 (Jan. 1997)

(** Product Certified by Intertek Testing Services bearing a WH Mark)

This Design Listing was created using the information outlined in the Introduction to the Fire-Resistant Joint Systems Section. Please refer to that Introduction to complement the Design Listing.

Hilti Firestop Systems

Reproduced by HILTI, Inc
Courtesy of Intertek Group
November 06, 2010

Intertek

PERIMETER FIRE BARRIER SYSTEM - ASTM E 2307

	CP 672 SPEED SPRAY	CP 672 FAST CURE	CFS-SP WB
F-RATING	2 3/4-HR.	2-HR.	2 3/4-HR.
T-RATING	1-HR.	3/4-HR.	1-HR.

L-RATING < 1 SCFM/LF
RATED FOR ± 8.3% HORIZONTAL MOVEMENT
RATED FOR ± 5% VERTICAL SHEAR MOVEMENT

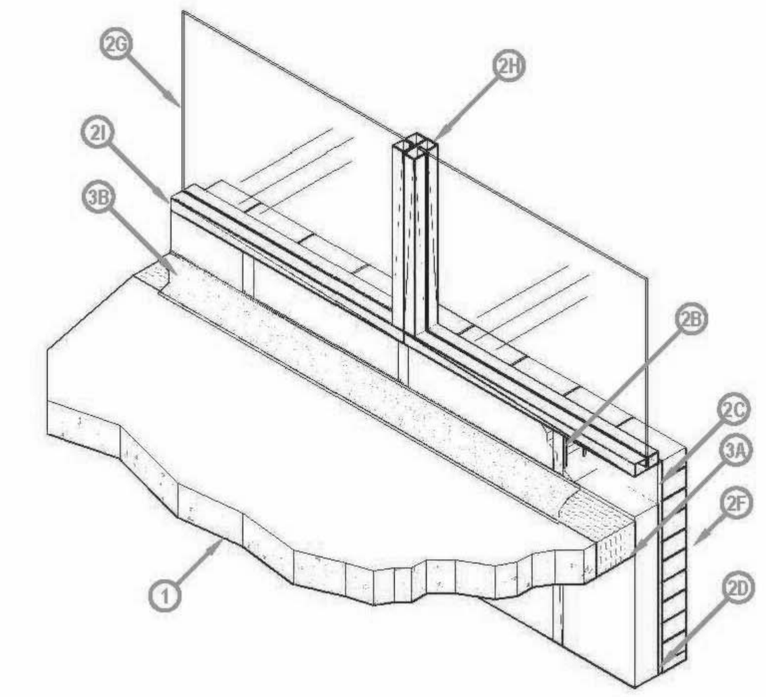

1. CONCRETE FLOOR ASSEMBLY: Max. two-hour rated concrete floor assembly made from either lightweight or normal weight concrete with a density of 100-150 pcf, with a min. thickness of 4-1/2-inch at the joint face. Overall slab thickness may vary to accommodate various blockout depths (longitudinal recesses) formed in the concrete, to house the architectural cover plate. The blockout width may also vary without restriction.
2. CURTAIN WALL ASSEMBLY: The curtain wall assembly shall incorporate the following construction features:
   A. Mounting Attachment: (Not shown) Attachment of the curtain wall framing to the structural framing shall be according to the curtain wall manufacturer's instructions. When required, the mounting attachments to the floor slab shall be connected to the joint face of the floor slab, according to the curtain wall manufacturer's instructions. Max. distance between mounting attachments shall be 24-inches.
   B. Steel-Stud Framing: Vertical framing members shall be a min. 3-5/8-inch by 1-5/8-inch, 18 GA steel "C" studs secured in an 18 GA steel track top and bottom using #6 x 1.25-inch Bugle head SD PT screws. Vertical framing shall not exceed a spacing of 24-inches o.c.
   C. Sandwiched Wall Surface: Use a min. 1/2-inch thick, 48-inch wide by 96-inch long, exterior grade gypsum wallboard (ASTM C 79), cement board, or fiberglass sheathed gypsum wallboard placed over and secured to framing with min. 1-1/4-inch long Type S drywall screws 8-inch o.c.
   D. Curtain Wall Insulation: Use a nom. 24-inch wide by min. 4 inch thick min. 4 pcf faced or un-faced mineral wool** batt insulation cut to size as required. The curtain wall insulation shall completely fill the recess of the min. 3-5/8-inch, by 1- 5/8-inch, by 18 GA steel "C" studs. If the stud cavity is deeper than 3-5/8-inch, use thicker insulation to accommodate the additional depth so that the cavity is full from the front of the stud to the rear of the stud. Install curtain wall insulation in each stud cavity so that min. 6-inches of curtain wall insulation is above the surface of the perimeter joint protection and a min. of 6-inches is below the underside of the floor, while maintaining the minimum 24-inch continuous vertical length of insulation in the spandrel region. The 24-inch width is fitted tightly between vertical framing members filling all studs in the spandrel region. Because the insulation is required to be continuous in both width and length, without butted joints, use of aluminum foil tape to seal between the insulation and the studs is optional. (** Listed with Intertek)
   E. Exterior Curtain Wall Insulation: (Optional - Not Shown) Expanded polystyrene foam (EPS) insulation. The EPS foam boards measure 24 inches wide by 48 inches long by 4 inches thick with a nominal density of 1 pcf. The EPS foam is attached to the sandwiched wall surface using mechanical fasteners or an adhesive in accordance with manufacturer's recommendations. Install the EPS boards in a running bond (brick-like) pattern and staggered over sandwiched wall surface (2C) joints. Apply pressure to the EPS boards to assist in the bonding process. All EPS boards must be butted together with no gaps or voids between them. Allow a minimum of 12 hours before continuing the application process when using adhesive. The EPS boards must be rasped to remove all irregular seams and establish a continuous flat surface.
   F. Exterior Curtain Wall Finish: Use brick and mortar of any type. Mortar joints not to exceed 7/8-inch. Secure bricks to wall assembly using conventional acceptable masonry techniques.
   G. Glass Vision Panels: Glass vision panels shall be installed to curtain wall framing according to the curtain wall system manufacturer's guidelines. Use a min. 1/4-inch thick, clear tempered glass that is fitted to the framing, having a min width of 24-inches and a min. height of 24-inches.
   H. Window Gaskets: Secure glass vision panels with a thermal break (thermal-set rubber extrusion).
   I. Window Framing: Steel framing members shall be a min. 3-5/8-inch by 1-5/8-inch 18 GA steel "U" channel or similar construction that is compatible with steel-stud framing (2B). Locate window framing at least 6 inches above the top surface of the floor assembly.
3. PERIMETER JOINT PROTECTION: The perimeter joint (linear opening) shall not exceed a 6-inch nom. Joint width (joint width at installation) and the perimeter joint treatment shall incorporate the following construction features:
   A. Packing Material: Use a min. 4-inch thick, 4 pcf density, mineral wool batt insulation** installed with the fibers running parallel to the slab edge and curtain wall. The packing material shall be compressed 25% in the nominal joint width. Compress the batt insulation into the perimeter joint such that the top surface of the batt insulation is flush with the top surface of the concrete floor slab and the insulation is compressed against the interior surface of the curtain wall insulation (2D). Splices (butt joints) in the lengths of mineral wool batt insulation are to be tightly compressed together. Reference the Introduction to Fire Resistive Joint Systems Section of this Directory for more details on how to determine the cut width of the insulation to be installed in the nominal joint width, and how to determine the compressed percentage of a known insulation width installed in a known nominal joint width. (** Listed with Intertek)
   B. CERTIFIED MANUFACTURER: Hilti, Inc.
   CERTIFIED PRODUCT: Joint Spray or Sealant
   MODEL: CP 672 Speed Spray or CP 672 Fast Cure or CFS-SP WB Firestop Joint Spray
   Fill, Void or Cavity Material: To be applied (sprayed, Brushed, or painted) to cover the exposed surface of the mineral wool installed in the perimeter joint. Apply a min. 1/8-inch wet (min. 1/16-inch dry) film thickness and overlap the material a min. ½ inch onto with Curtain Wall Insulation (2D) and Concrete Floor Assembly (1). If the spraying process is stopped and the applied liquid cures to an elastomeric film before process is restarted, then overlap the edge of the cured material at least 1/8-inch with the spray. Reference Product Section of this Directory for more details about the Listed product.

** Before testing, the spliced test specimen was cycled 500 times at 30 cpm according to ASTM E 1399 and ICBO ES AC 30 (Jan. 1997).

Hilti Firestop Systems

Reproduced by HILTI, Inc
Courtesy of Intertek Group
November 06, 2010

Intertek

System No. CEJ 316 P (HI/BP 165-03)

PERIMETER FIRE BARRIER SYSTEM - ASTM E 2307

	CP 672 SPEED SPRAY	CP 672 FAST CURE	CFS-SP WB
F-RATING	2 3/4-HR.	2-HR.	2 3/4-HR.
T-RATING	1-HR.	3/4-HR.	1-HR.

L-RATING < 1 SCFM/LF
RATED FOR ± 8.3% HORIZONTAL MOVEMENT
RATED FOR ± 5% VERTICAL SHEAR MOVEMENT

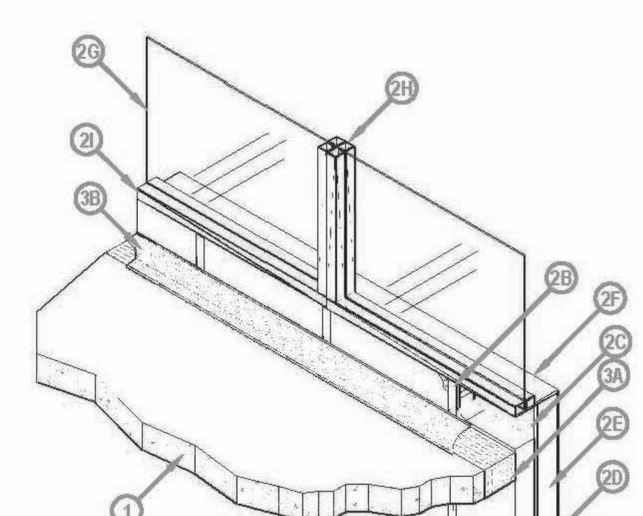

CRSA
649 E. South Temple
Salt Lake City, UT 84102
801.355.5915

MWL
11798 N. Lakeridge Pkwy.
Ashland, VA 23005
804-228-7473

State of Utah
Department of Administrative Services
Division of Facilities Construction & Management
DFCM
4110 State Office Building
Salt Lake City, Utah 84114
Phone: (801) 538 - 3018
Fax: (801) 538 - 3267

DIVISION OF FACILITIES CONSTRUCTION AND MANAGEMENT
REVIEWED FOR CODE COMPLIANCE
SIGNATURE: Enzo Calfa
DATE: 08-05-2014

STATE OF UTAH
#134096
MEHRDAD SAMIE
LICENSED ARCHITECT
04.28.2014
ARCHITECT-ENGINEER STAMP

Unified State Laboratory Module 2

4451 South 2700 West,
Taylorsville, UT 84118

DFCM #: 13020300

Project #: B13-024

DATE:	ISSUE TYPE:
APRIL 21, 2014	BID SET
CHECKED BY	J. NIELSEN
DRAWN BY	F. PITORE

UL DETAILS

GF007

VOLUME 1

C:\Users\fernando\Documents\A_13024_ModII_2013_fernando.rvt
7/14/2014 1:11:44 PM

1. CONCRETE FLOOR ASSEMBLY: Max. two-hour rated concrete floor assembly made from either lightweight or normal weight concrete with a density of 100-150 pcf, with a min. thickness of 4-1/2-inch at the joint face. Overall slab thickness may vary to accommodate various blockout depths (longitudinal recesses) formed in the concrete, to house the architectural cover plate. The blockout width may also vary without restriction.
2. CURTAIN WALL ASSEMBLY: The curtain wall assembly shall incorporate the following construction features:
   A. Mounting Attachment: (Not shown) Attachment of the curtain wall framing to the structural framing shall be according to the curtain wall manufacturer's instructions. When required, the mounting attachments to the floor slab shall be connected to the joint face of the floor slab, according to the curtain wall manufacturer's instructions. Max. distance between mounting attachments shall be 24-inches.
   B. Steel-Stud Framing: Vertical framing members shall be a min. 3-5/8-inch by 1-5/8-inch, 18 GA steel "C" studs secured in an 18 GA steel track top and bottom using #6 x 1.25-inch Bugle head SD PT screws. Vertical framing shall not exceed a spacing of 24-inches o.c.
   C. Sandwiched Wall Surface: Use a min. 1/2-inch thick, 48-inch wide by 96-inch long, exterior grade gypsum wallboard (ASTM C 79), cement board, or fiberglass sheathed gypsum wallboard placed over and secured to framing with min. 1-1/4-inch long Type S drywall screws 8-inch o.c.
   D. Curtain Wall Insulation: Use a nom. 24-inch wide by min. 4 inch thick min. 4 pcf faced or un-faced mineral wool** batt insulation cut to size as required. The curtain wall insulation shall completely fill the recess of the min. 3-5/8-inch, by 1- 5/8-inch, by 18 GA steel "C" studs. If the stud cavity is deeper than 3-5/8-inch, use thicker insulation to accommodate the additional depth so that the cavity is full from the front of the stud to the rear of the stud. Install curtain wall insulation in each stud cavity so that min. 6-inches of curtain wall insulation is above the surface of the perimeter joint protection and a min. of 6-inches is below the underside of the floor, while maintaining the minimum 24-inch continuous vertical length of insulation in the spandrel region. The 24-inch width is fitted tightly between vertical framing members filling all studs in the spandrel region. Because the insulation is required to be continuous in both width and length, without butted joints, use of aluminum foil tape to seal between the insulation and the studs is optional. (** Listed with Intertek)
   E. Exterior Curtain Wall Insulation: An Exterior Insulation Finish System (EIFS) is composed of an expanded polystyrene foam (EPS) insulation, and a Exterior Curtain Wall Finish (2F). The EIFS system is a monolithic assembly without expansion or control joints. The EPS foam boards measure 24 inches wide by 48 inches long by 4 inches thick with a nominal density of 1 pcf. The EPS foam is attached to the sandwiched wall surface using mechanical fasteners or an adhesive in accordance with manufacturer's recommendations. Install the EPS boards in a running bond (bricklike) pattern and staggered over sandwiched wall surface (2C) joints. Apply pressure to the EPS boards to assist in the bonding process. All EPS boards must be butted together with no gaps or voids between them. Allow a minimum of 12 hours before continuing the application process when using adhesive. The EPS boards must be rasped to remove all irregular seams and establish a continuous flat surface.
   F. Exterior Curtain Wall Finish: The plaster base coat and reinforcing mesh is applied over the Exterior Curtain Wall Insulation (2D). Precut the mesh as needed. The mesh is a woven fiberglass reinforcement fabric that is compatible with the plaster base coat and finish coat materials. Apply1/16 to 1/8-inch thick plaster base coat to the exposed surface of the EPS foam. Apply the mesh; embed the mesh into the plaster base coat using a trowel. Start at the middle and work outwards towards edges. The final thickness of the plaster base coat with the mesh embedded should be approximately1/16-inches. Let the base coat dry completely before applying the plaster finish coat. The plaster finish coat is a gypsum based wall coating which may contain silica sand or marble aggregates. Apply the plaster finish coat using a trowel in the same manner as the plaster base coat.
   G. Glass Vision Panels: Glass vision panels shall be installed to curtain wall framing according to the curtain wall system manufacturer's guidelines. Use a min. 1/4-inch thick, clear tempered glass that is fitted to the framing, having a min width of 24-inches and a min. height of 24-inches.
   H. Window Gaskets: Secure glass vision panels with a thermal break (thermal-set rubber extrusion).
   I. Window Framing: Steel framing members shall be a min. 3-5/8-inch by 1-5/8-inch 18 GA steel "U" channel or similar construction that is compatible with steel-stud framing (2B). Locate window framing at least 6 inches above the top surface of the floor assembly.
3. PERIMETER JOINT PROTECTION: The perimeter joint (linear opening) shall not exceed a 6-inch nom. Joint width (joint width at installation) and the perimeter joint treatment shall incorporate the following construction features:
   A. Packing Material: Use a min. 4-inch thick, 4 pcf density, mineral wool batt insulation** installed with the fibers running parallel to the slab edge and curtain wall. The packing material shall be compressed 25% in the nominal joint width. Compress the batt insulation into the perimeter joint such that the top surface of the batt insulation is flush with the top surface of the concrete floor slab and the insulation is compressed against the interior surface of the curtain wall insulation (2D). Splices (butt joints) in the lengths of mineral wool batt insulation are to be tightly compressed together. Reference the Introduction to Fire Resistive Joint Systems Section of this Directory for more details on how to determine the cut width of the insulation to be installed in the nominal joint width, and how to determine the compressed percentage of a known insulation width installed in a known nominal joint width. (** Listed with Intertek)
   B. CERTIFIED MANUFACTURER: Hilti, Inc.
   CERTIFIED PRODUCT: Joint Spray or Sealant
   MODEL: CP 672 Speed Spray or CP 672 Fast Cure or CFS-SP WB Firestop Joint Spray
   Fill, Void or Cavity Material: To be applied (sprayed, Brushed, or painted) to cover the exposed surface of the mineral wool installed in the perimeter joint. Apply a min. 1/8-inch wet (min. 1/16-inch dry) film thickness and overlap the material a min. 1/2 inch onto with Curtain Wall Insulation (2D) and Concrete Floor Assembly (1). If the spraying process is stopped and the applied liquid cures to an elastomeric film before process is restarted, then overlap the edge of the cured material at least 1/8-inch with the spray. Reference Product Section of this Directory for more details about the Listed product.

** Before testing, the spliced test specimen was cycled 500 times at 30 cpm according to ASTM E 1399 and ICBO ES AC 30 (Jan. 1997).

Hilti Firestop Systems

Reproduced by HILTI, Inc.
Courtesy of Intertek Group
November 05, 2010

Intertek

System No. CEJ 421 P (HI/BP 120-03)

PERIMETER FIRE BARRIER SYSTEM - ASTM E 2307

	CP 672 SPEED SPRAY	CP 672 FAST CURE	CFS-SP WB
F-RATING	2-HR.	2-HR.	2HR.
T-RATING	1-HR.	3/4-HR.	1-HR.

L-RATING <1 SCFM/LF
RATED FOR ±0% HORIZONTAL MOVEMENT
RATED FOR ±0% VERTICAL SHEAR MOVEMENT

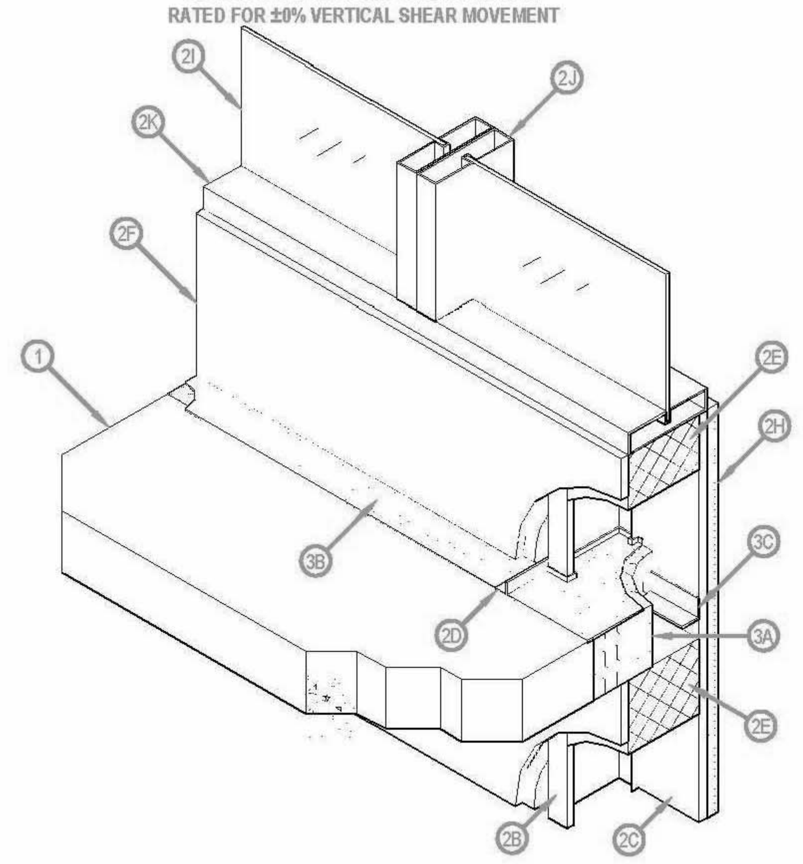

1. CONCRETE FLOOR ASSEMBLY: Minimum two-hour rated concrete floor assembly (Item 1) made from either lightweight or normal weight concrete with a density of 100-150 pcf, with a minimum thickness of 4-1/2-inches at the slab edge (joint face). Optional – Provided the two-hour concrete floor assembly (Item 1) rating is not compromised, the overall slab thickness may vary to accommodate various blockout depths (longitudinal recesses) formed in the concrete, to house an optional architectural joint system. The blockout width may also vary without restriction.
2. CURTAIN WALL ASSEMBLY: The curtain wall assembly shall incorporate the following construction features:
   A. Mounting Attachment: (Not shown) Attach the steel-stud framing to the structural framing according to the curtain wall manufacturer's instructions. When required, connect the mounting attachments to the concrete floor assembly (Item 1) at the slab edge (joint face), according to the curtain wall manufacturer's instructions. Use a maximum 10-foot distance between mounting attachments.
   B. Steel-Stud Framing: Use minimum 6-inch by 1-5/8-inch, 18 GA steel "C" studs as vertical framing members with a maximum spacing of 24-inches on center secured in 18 GA steel tracks, top and bottom, using minimum #6 x 1/2-inch pan or hex head SD PT screws. Secure the steel-stud framing to the concrete floor assembly (Item 1) with curtain wall clips (Item 2D). Alternate Method: Use multiple 16 GA steel studs positioned horizontally and secured together either by mechanical fasteners or welds to form a solid box.
   C. Sandwiched Wall Surface: Use a minimum 5/8-inch thick, 48-inch wide by 96-inch long, exterior grade fiberglass sheathed gypsum board placed over and secured to steel stud framing (Item 2B) with minimum 1-1/4-inch long Type S drywall screws 12-inch on center in field and 8-inch on center at perimeter.
   D. Curtain Wall Clips: Affix minimum 20 GA 1 x 1-inch steel angle using 5/8-inch long sheet metal screws to the vertical framing (Item 2B) and to the surface of the concrete floor assembly (Item 1) using minimum ¼-inch diameter by 1-inch long concrete screws, or an equivalent fastening method in accordance with the curtain wall manufacturer's installation instructions.
   E. Optional Curtain Wall Insulation: Curtain wall insulation is not required. However, it can be installed above or below the perimeter joint protection. When used, secure the insulation in accordance with the manufacturer's installation instructions. Mineral wool or glass fiber batt insulations are acceptable. Only Intertek Certified Mineral Wool Manufacturer's product meeting the above minimum requirements.
   F. Optional Interior Curtain Wall Surface: An interior curtain wall surface is not required. However, it can be installed above or below the perimeter joint protection. When used, secure the interior curtain wall surface in accordance with the manufacturer's installation instructions. Gypsum board is acceptable.
   G. Optional Knee-Wall: (Not Shown) A "knee-wall" is not required. Install above the perimeter joint protection. When using a knee-wall with 6-inch steel stud construction, the 6-inch wide steel track at the bottom of the knee-wall can replace the curtain wall clips. The 6-inch steel track shall be attached to each vertical framing member (Item 2B) using 5/8-inch long sheet metal screws and to the concrete floor assembly using min. ¼-inch diameter by 1-inch long concrete screws.
   H. Exterior Curtain Wall Finish: The exterior finish shall not create voids or openings in the sandwiched wall surface and shall extend at least 6-inches above and at least 24-inches below the surface of the concrete floor assembly. The following finishes are acceptable:
      (1) Exterior Insulation Finish System: Any Listed and Labeled EIFS composed of an expanded polystyrene foam (EPS) insulation, and an Exterior Curtain Wall Finish consisting of the following: A plaster, base coat and reinforcing mesh applied over the sandwiched wall surface. Precut the mesh as needed. The mesh is a woven fiberglass reinforcement fabric that is compatible with the plaster base coat and finish coat materials. Apply 1/16 to 1/8-inch thick plaster base coat to the exposed surface of the EPS foam. The EPS foam boards nominally measure 24 inches wide by 48 inches long by a maximum of 4 inches thick with a nominal density of 1 pcf. The EPS foam is attached to the sandwiched wall surface using mechanical fasteners or an adhesive in accordance with manufacturer's recommendations. Install the EPS boards in a running bond (brick-like) pattern and staggered over sandwiched wall surface joints. Apply pressure to the EPS boards to assist in the bonding process. All EPS boards must be butted together with no gaps or voids between them. Allow a minimum of 12 hours before continuing the application process when using adhesive. The EPS boards must be rasped to remove all irregular seams and establish a continuous flat surface. Apply the mesh over the EPS; embed the mesh into the plaster base coat using a trowel. Start at
      the middle and work outwards towards edges. The final thickness of the plaster base coat with the mesh embedded should be approximately 1/16-inches. Let the base coat dry completely before applying the plaster finish coat. The plaster finish coat is a gypsum based wall coating which may contain silica sand or marble aggregates. Apply the plaster finish coat using a trowel in the same manner as the plaster base coat. Other installation techniques are acceptable when detailed by the manufacturer. The EIFS system is a monolithic assembly without expansion or control joints.
      (2) Glass Panels: Glass panels shall be sized and installed to curtain wall framing according to the curtain wall system manufacturer's guidelines. Use a min. 1/4 in. thick, clear, heat-strengthened (HS) glass or tempered glass with a max. width and height less than the framing o.c. spacing, which allows the glass to be secured between the notched shoulder of the framing and pressure bar. Panels are secured with a thermal break (rubber extrusion), pressure bar (extrusion), min. 1/4-20 x 5/8 in. long screws, and a snap face (extrusion) or other manner as detailed by the manufacturer. The system is a monolithic assembly without expansion or control joints.
      (3) Aluminum Panels: Minimum 1/8-inch thick aluminum panels secured to the steel-stud framing (Item 2B) in accordance with the manufacturer's installation instructions. When framing for the aluminum panels is required, it is to be installed with the manufacturer's installation instructions. The system is a monolithic assembly without expansion or control joints.
      (4) Brick: Use any conventional brick and mortar type. Any brick pattern is acceptable. Mortar joints not to exceed 7/8-inches. Secure bricks to wall assembly using conventional acceptable masonry construction techniques. The system is a monolithic assembly without expansion or control joints.
      (5) Stucco: Any Listed and Labeled stucco system is acceptable provided that the following is abided by: When EPS is used, the EPS foam boards nominally measure a maximum of 4 inches thick with a nominal density of 1 pcf. The stucco manufacturer confirms the stucco is compatible with the sandwiched wall surface. The system is a monolithic assembly without expansion or control joints.
      (6) Stone: Use any conventional stone panel and mortar type measuring at least 1-inch thick. Any stone pattern is acceptable. Mortar joints not to exceed 7/8-inches. Secure stones to wall assembly using conventional acceptable masonry construction techniques. The system is a monolithic assembly without expansion or control joints.
      (7) Siding: Any Listed and Labeled siding system is acceptable provided that the following is abided by: The siding shall be classified as non-combustible. The system is a monolithic assembly without expansion or control joints.
      (8) GFRC Panels: Glass fiber reinforced concrete panels shall be at least 1-inch thick and attached in accordance with the manufacturer's installation instructions. The system is a monolithic assembly without expansion or control joints.
   I. Optional Vision Glass Panels: Glass panels shall be sized and installed to curtain wall framing according to the curtain wall system manufacturer's guidelines. Use a min. 1/4 in. thick, clear, heat-strengthened (HS) glass or tempered glass with a max. width and height less than the aluminum framing o.c. spacing, which allows the glass to be secured between the notched shoulder of the aluminum framing and pressure bar. Panels are secured with a thermal break (rubber extrusion), pressure bar (aluminum extrusion), min. 1/4-20 x 5/8 in. long screws, and a snap face (aluminum extrusion).
   J. Optional Window Gaskets: When required by the manufacturer, secure glass vision panels with a thermal break (thermal-set rubber extrusion). K. Optional Window Framing: Framing material shall be non-combustible. Locate window framing at least 6 inches above the top surface of the floor assembly.
3. PERIMETER JOINT PROTECTION: The perimeter joint (linear opening) shall not exceed a 9 in. nom. joint width (joint width at installation) between the interior face of the sandwiched wall surface and the vertical face of the concrete floor assembly. The perimeter joint treatment shall incorporate the following construction features:
   A. Packing Material: Use a minimum 4 inch thick, 4 pcf density, mineral wool batt insulation. Install the top surface of the packing material flush with the top surface of the concrete floor assembly (Item 1). Only Intertek Certified Mineral Wool Manufacturer's product meeting the above minimum requirements. Compress the lengths of packing material together at least ½-inch at splices (butt joints). Install packing material (Item 3A) using one of the following methods:
   Method 1 – Two-step installation process.
      (1) Install pieces of packing material (Item 3A) between the vertical framing members (Item 2B). Cut and install the packing material (Item 3A) with the fibers running horizontally (perpendicular) to the slab edge (joint face). Cut the pieces of packing material (Item 3A) at least ¼-inch longer than the distance between the vertical framing members (Item 2B) and 1/8-inch greater than the width of the steel-stud framing. (Cut packing material (Item 3A) 24-1/4-inches long for a maximum 24 inch spacing between vertical framing members (Item 2B). Cut packing material (Item 3A) 6-1/8-inch wide for 6-inch, 18 GA steel "C" studs.) Allow no voids between vertical framing members (Item 2B) or between sandwiched wall surface and packing material (Item 3A).
      (2) Install pieces of packing material (Item 3A) in the maximum 3 inch nominal joint width (joint width at installation) between the interior face of the steel stud framing (Item 2B) and the vertical face of the concrete floor assembly (Item 1). Cut and install the packing material (Item 3A) with the fibers running vertically (parallel) to the slab edge (joint face). Cut packing material (Item 3A) 3-3/4-inches wide for a maximum 3 inch nominal joint width. Compress the packing material (Item 3A) minimum 20% and install in nominal joint width.
   Method 2 – Two-step installation process.
      (1) Install pieces of packing material (Item 3A) between the vertical framing members (Item 2B). Cut and install the packing material (Item 3A) with the fibers running vertically (parallel) to the slab edge (joint face). Cut the pieces of packing material (Item 3A) at least ¼-inch longer than the distance between the vertical framing members (Item 2B). (Cut packing material (Item 3A) 24-1/4-inches long for a maximum 24 inch spacing between vertical framing members (Item 2B).) Cut packing material (Item 3A) 9-inch wide for 6-inch, 18 GA steel "C" studs. Install the packing material (Item 3A) (minimum compression 33%). Allow no voids between vertical framing members (Item 2B) or between sandwiched wall surface and packing material (Item 3A).
      (2) Install pieces of packing material (Item 3A) in the maximum 3 inch nominal joint width (joint width at installation) between the interior face of the steel stud framing (Item 2B) and the vertical face of the concrete floor assembly (Item 1). Cut and install the packing material (Item 3A) with the fibers running vertically (parallel) to the slab edge (joint face). Cut packing material (Item 3A) 4-1/2-inches wide for a maximum 3 inch nominal joint width. Compress the packing material (Item 3A) minimum 33% and install in nominal joint width.

System No. CEJ 421 P (HI/BP 120-03) (cont.)

PERIMETER FIRE BARRIER SYSTEM - ASTM E 2307

	CP 672 SPEED SPRAY	CP 672 FAST CURE	CFS-SP WB
F-RATING	2-HR.	2-HR.	2HR.
T-RATING	1-HR.	3/4-HR.	1-HR.

L-RATING <1 SCFM/LF
RATED FOR ±0% HORIZONTAL MOVEMENT
RATED FOR ±0% VERTICAL SHEAR MOVEMENT

B. CERTIFIED MANUFACTURER: Hilti, Inc.
CERTIFIED PRODUCT: Joint Spray or Sealant
MODEL: CP 672 Speed Spray or CP 672 Fast Cure
Fill, Void or Cavity Material: Spray apply liquid over exposed surface of the packing material (Item 3A). Apply a minimum wet spray film thickness of 1/8 inch and overlap the material a minimum 1/2 inch onto the adjacent curtain wall assembly (Item 2) and concrete floor assembly (Item 1). When the spraying process is stopped and the applied liquid cures to an elastomeric film before application process is restarted, then overlap the edge of the cured material at least 1/8 inch with the spray.
C. Reinforcing Angle: Required for packing material (Item 3A) installed using Method 1 when mineral wool batt insulation in Optional Curtain Wall Insulation (Item 2E) or gypsum board in Optional Interior Curtain Wall Surface (Item 2F) is not present. Mount a minimum 20GA, 1-1/2 inch x 1-1/2 inch galvanized steel angle to the vertical framing members (Item 2B) using minimum #6 x 1.25-inch Bugle head SD PT screws. Notch the ends of each piece so that the vertical leg contacts to the 1-5/8-inch face of the vertical framing members (Item 2B) in contact with the sandwiched wall surface (Item 2C). Position the reinforcing angle so that the horizontal leg extends into a continuous 1-1/2 inch deep slit located longitudinally in the mid height of the packing material (Item 3A).

Hilti Firestop Systems

Reproduced by HILTI, Inc.
Courtesy of Intertek Group
November 05, 2010

Intertek

System No. CEJ 425 P (HI/BP 120-04)

PERIMETER FIRE BARRIER SYSTEM - ASTM E 2307

	CP 672 SPEED SPRAY	CP 672 FAST CURE	CFS-SP WB
F-RATING	2-HR.	2-HR.	2-HR.
T-RATING	1-HR.	3/4-HR.	1-HR.

HEAD OF WALL JOINT SYSTEM
ASTM E 2307-04 Section 14.1 Movement
Rated for ± 0% horizontal movement
Rated for - 100% downward vertical shear movement (3/4 inch) Class II 500 Cycles
Rated for + 0% upward vertical shear movement

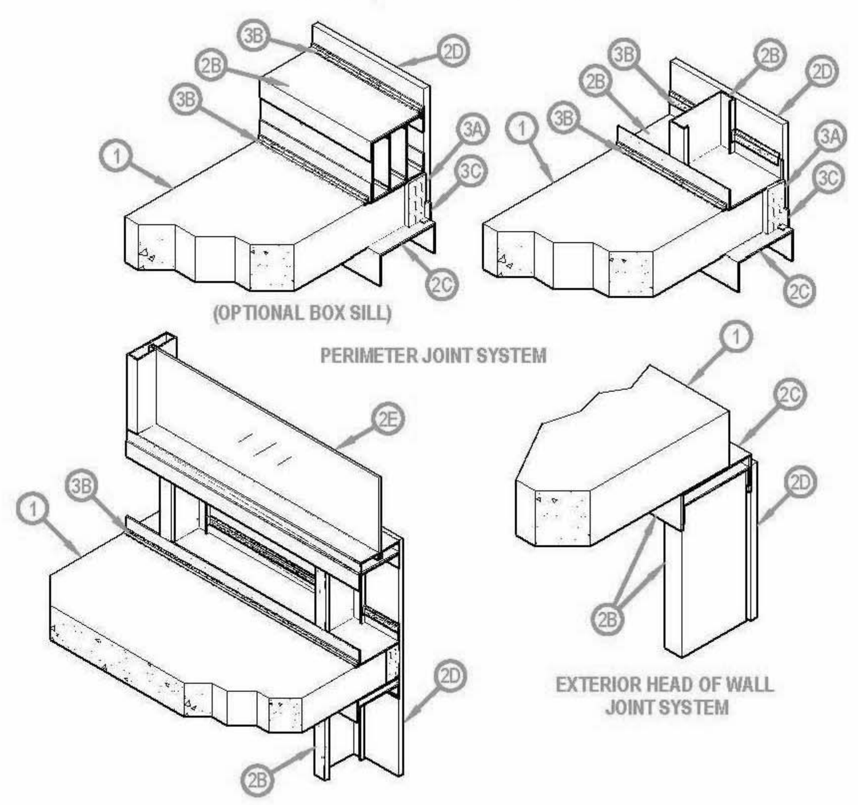

1. CONCRETE FLOOR ASSEMBLY: Minimum two-hour rated concrete floor assembly (Item 1) made from either lightweight or normal weight concrete with a density of 100-150 pcf, with a minimum thickness of 4 to 4-1/2-inches, respectively, at the slab edge (joint face). Optional – Provided the two-hour concrete floor assembly (Item 1) rating is not compromised, the overall slab thickness may vary to accommodate various blockout depths (longitudinal recesses) formed in the concrete, to house an optional architectural joint system. The blockout width may also vary without restriction.
2. CURTAIN WALL ASSEMBLY: The curtain wall assembly shall incorporate the following construction features:
   A. Mounting Attachment: (Not shown) Attach the steel-stud framing to the structural framing according to the curtain wall manufacturer's instructions. When required, connect the mounting attachments to the concrete floor assembly (Item 1) at the slab edge (joint face), according to the curtain wall manufacturer's instructions. Use a maximum 10-foot distance between mounting attachments.
   B. Steel-Stud Framing: Use minimum 6-inch by 1-5/8-inch, 16 GA steel "C" studs cut to length as vertical framing members spaced a maximum of 16-inches on center, secure the ends of the steel studs in compatible sized 20 GA steel tracks, using minimum #6 x -1/2-inch pan or hex head screws. Cantilever the floor track nominally 2-inches past the vertical face of the concrete floor assembly (Item 1). Secure the floor track to the top of the concrete floor assembly (Item 1) with 1/4-inch diameter x 2-inch long concrete screws (or either powder actuated fasteners or steel expansion bolts having equivalent strength and performance) spaced a maximum of 24-inches on center. Insert the ceiling track inside the "slip-track (deflection channel)" to create a 3/4-inch gap between channels to allow for downward movement. Alternate Lighter Gauge Slotted Ceiling Track: Alternate to ceiling track above, use minimum 24 GA galvanized steel channel with slotted flanges sized to accommodate minimum 6-inch by 1-5/8-inch, 16 GA steel "C" studs. Alternate Framing Box Sill: Alternate to steel-stud framing (Item 2B) created between window assembly and top of the concrete floor assembly (Item 1), use multiple minimum 16 GA galvanized structural steel tracks or steel studs placed horizontally and secured together using minimum #6 x 1/2-inch pan or hex head screws or welds and capped top and bottom with floor and ceiling tracks or use multiple minimum 16 GA galvanized punched steel tracks or steel studs with all openings sealed with mineral wool placed horizontally and secured together using minimum #6 x 1/2-inch pan or hex head screws or welds and capped top and bottom with floor and ceiling tracks.
   C. Slip-Track (Deflection Channel): As part of the exterior wall assembly (Item 2) and head of wall joint system, attach a minimum 16 GA channel, sized to accommodate steel-stud framing (Item 2B), to the bottom of the concrete floor assembly (Item 1) using 1/4-inch diameter x 2-inch long concrete screws spaced nominally 12-inches on center. Cantilever the slip-track (deflection channel) nominally 2-inches past the vertical face of the concrete floor assembly (Item 1). The cantilevered tracks (Items 2B & 2C) create a minimum 4-inch deep by 2-inch wide reveal. Attach reinforcing angle (item 3C) to top of slip-track (deflection channel). Create an exterior maximum 3/4-inch horizontal joint (exterior head of wall joint system) at the slip-track (deflection channel) after the sandwiched wall surface (Item 2D) is installed. Form the joint using two juxtaposed edges of the sandwiched wall surface (Item 2D) as the sides and create the back of the joint using the exposed steel face of slip-track (deflection channel) (Item 2C). Locate the 3/4-inch horizontal joint directly below and parallel to the perimeter joint protection (Item 3). Optional Joint System: Install a nominal 1/2-inch polyethylene backer rod into the 3/4-inch horizontal joint in contact with the steel face of slip-track (deflection channel. Cover the nominal 1/2-inch polyethylene backer rod using a silicone, endothermic, or Intumescent sealant. Only Intertek Certified Sealant Manufacturer's product meeting the above minimum requirements.
   D. Sandwiched Wall Surface: Install packing material (Item 3A) and reinforcing angle (Item 3C), then apply and secure a minimum 5/8-inch thick, 48-inch wide by 96-inch long, exterior grade fiberglass sheathed gypsum board to steel stud framing (Item 2B) with minimum 1-1/4-inch long Type S drywall screws 12-inch on center in field and 8-inch on center at perimeter created by the cantilevered tracks (Items 2B & 2C). Do not attach exterior grade fiberglass sheathed gypsum board to slip-track (deflection channel) (Item 2C). Alternate Cementitious Backer Units: Use minimum 5/8-inch thick cement based boards attached to steel stud framing (Item 2B) with minimum 1-1/4-inch long Type S drywall screws 12-inches on center in field and 8-inches on center at perimeter created by the cantilevered tracks (Items 2B & 2C). Do not attach 5/8-inch thick cement based boards to slip-track (deflection channel) (Item 2C). Butt all edges of all 5/8-inch thick cement based boards tightly together and cover joints with glass fiber mesh tape covered with compatible cementitious coating.
   E. Optional Vision Glass Panels: Size and install glass panels into curtain wall framing according to the curtain wall system manufacturer's guidelines. Use a min. 1/4 inch thick, clear, heat-strengthened (HS) glass or tempered glass sized for the window framing, which allows the vision glass panels to be secured between the notched shoulder of the framing and pressure bar. When required by the manufacturer, secure vision glass panels with a thermal break (rubber extrusion), pressure bar (aluminum extrusion), min. 1/4-20 x 5/8 in. long screws, and a snap face (aluminum extrusion). Optional Window Framing: Framing material shall be non-combustible. Locate window framing at least 4-1/2 inches above the top surface of the floor assembly.
   F. Optional Curtain Wall Clips: (Not shown) When desired, affix minimum 20 GA 1 x 1-inch steel angle using 5/8-inch long sheet metal screws to the vertical framing (Item 2B) and to the surface of the concrete floor assembly (Item 1) using minimum ¼-inch diameter by 1-inch long concrete screws.
   G. Optional Curtain Wall Insulation: (Not shown) When desired, install curtain wall insulation above or below the perimeter joint protection (Item 3). When used, secure the insulation in accordance with the manufacturer's installation instructions. Mineral wool or glass fiber batt insulations are acceptable. Only Intertek Certified Mineral Wool Manufacturer's product meeting the above minimum requirements.
   H. Optional Interior Curtain Wall Surface: (Not shown) When desired, install an interior curtain wall surface above or below the perimeter joint protection (Item 3). When used, secure the interior curtain wall surface in accordance with the manufacturer's installation instructions. Gypsum board is acceptable.
   I. Exterior Curtain Wall Finish: (Not shown) The exterior finish shall not create voids or openings in the sandwiched wall surface and shall extend at least 4-inches above and at least 24-inches below the surface of the concrete floor assembly (Item 1). The following finishes are acceptable:
      (1) Exterior Insulation Finish System: When desired, use any Listed and Labeled EIFS composed of an expanded polystyrene (EPS) foam insulation, and an Exterior Curtain Wall Finish consisting of the following: A plaster, base coat and reinforcing mesh applied over the sandwiched wall surface. Precut the mesh as needed. The mesh is a woven fiberglass reinforcement fabric that is compatible with the plaster base coat and finish coat materials. Apply 1/16 to 1/8-inch thick plaster base coat to the exposed surface of the EPS foam. The EPS foam boards nominally measure 24 inches wide by 48 inches long by a maximum of 4 inches thick with a nominal density of 1 pcf. The EPS foam is attached to the sandwiched wall surface (Item 2D) using mechanical fasteners or an adhesive in accordance with manufacturer's recommendations. Install the EPS boards in a running bond (brick-like) pattern and staggered over sandwiched wall surface (Item 2D) joints. Apply pressure to the EPS boards to assist in the bonding process. All EPS boards must be butted together with no gaps or voids between them. Allow a minimum of 12 hours before continuing the application process when using adhesive. The EPS boards must be rasped to remove all irregular seams and establish a continuous flat surface. Apply the mesh over the EPS; embed the mesh into the plaster base coat using a trowel. Start at the middle and work outwards towards edges. The final thickness of the plaster base coat with the mesh embedded should be approximately 1/16-inches. Let the base coat dry completely before applying the plaster finish coat. The plaster finish coat is a gypsum based wall coating which may contain silica sand or marble aggregates. Apply the plaster finish coat using a trowel in the same manner as the plaster base coat. Other installation techniques are acceptable when detailed by the manufacturer. The EIFS system is a monolithic assembly without expansion or control joints. Only Intertek Certified EIFS Manufacturer's product meeting the above minimum requirements.
      (2) Glass Panels: Size and install glass panels into curtain wall framing according to the curtain wall system manufacturer's guidelines. Use a min. 1/4 in. thick, clear, heat-strengthened (HS) glass or tempered glass with a max. width and height less than the framing o.c. spacing, which allows the glass to be secured between the notched shoulder of the framing and pressure bar. Panels are secured with a thermal break (rubber extrusion), pressure bar (extrusion), min. 1/4-20 x 5/8 in. long screws, and a snap face (extrusion) or other manner as detailed by the manufacturer. The system is a monolithic assembly without expansion or control joints.
      (3) Aluminum Panels: Minimum 1/8-inch thick aluminum panels secured to the steel-stud framing (Item 2B) in accordance with the manufacturer's installation instructions. When framing for the aluminum panels is required, it is to be installed with the manufacturer's installation instructions. The system is a monolithic assembly without expansion or control joints.
      (4) Brick: Use any conventional brick and mortar type. Any brick pattern is acceptable. Mortar joints not to exceed 7/8-inches. Secure bricks to wall assembly using conventional acceptable masonry construction techniques. The system is a monolithic assembly without expansion or control joints.
      (5) Stucco: Any Listed and Labeled stucco system is acceptable provided that the following is abided by: When EPS is used, the EPS foam boards nominally measure a maximum of 4 inches thick with a nominal density of 1 pcf. The stucco manufacturer confirms the stucco is compatible with the sandwiched wall surface. The system is a monolithic assembly without expansion or control joints.
      (6) Stone: Use any conventional stone panel and mortar type measuring at least 1-inch thick. Any stone pattern is acceptable. Mortar joints not to exceed 7/8-inches. Secure stones to wall assembly using conventional acceptable masonry construction techniques. The system is a monolithic assembly without expansion or control joints.
      (7) Siding: Any Listed and Labeled siding system is acceptable provided that the following is abided by: The siding shall be classified as non-combustible. The system is a monolithic assembly without expansion or control joints.
      (8) GFRC Panels: Glass fiber reinforced concrete panels shall be at least 1-inch thick and attached in accordance with the manufacturer's installation instructions. The system is a monolithic assembly without expansion or control joints.
      (9) Roofing Materials: Any Listed and Labeled Class A bituminous roofing material applied in accordance with manufacturer's installation instructions. Only Intertek Certified Roofing Manufacturer's product meeting the above minimum requirements.

CRSA
649 E. South Temple
Salt Lake City, UT 84102
801.355.5915

MWL
11798 N. Lakeridge Pkwy.
Ashland, VA 23005
804-228-7473

State of Utah
Department of Administrative Services
Division of Facilities Construction & Management
DFCM
4110 State Office Building
Salt Lake City, Utah 84114
Phone: (801) 538 - 3018
Fax: (801) 538 - 3267

DIVISION OF FACILITIES CONSTRUCTION AND MANAGEMENT
REVIEWED FOR CODE COMPLIANCE
SIGNATURE: Enzo Calfa
DATE: 08-05-2014

STATE OF UTAH
#134098
MEHRDAD SAMIE
LICENSED ARCHITECT
04.28.2014
ARCHITECT-ENGINEER STAMP

Unified State Laboratory Module 2
4451 South 2700 West,
Taylorsville, UT 84118

DFCM #:	13020300
Project #:	B13-024
DATE:	ISSUE TYPE:
APRIL 21, 2014	BID SET
CHECKED BY	J. NIELSEN
DRAWN BY	F. PITORE

UL DETAILS

GF008
VOLUME 1

C:\Users\fernando\Documents_A_13024_ModII_2013_fernando.rvt
7/14/2014 1:11:51 PM

3. PERIMETER JOINT PROTECTION: The perimeter joint (linear opening) shall not exceed a 2 in. nom. joint width (joint width at installation) between the interior face of the sandwiched wall surface and the vertical face of the concrete floor assembly. The perimeter joint treatment shall incorporate the following construction features:

A. Packing Material: Use a minimum 4 inch thick, 4 pcf density, mineral wool batt insulation. Install the top surface of the packing material flush with the top and bottom surface of the concrete floor assembly (Item 1). Only Intertek Certified Mineral Wool Manufacturer's product meeting the above minimum requirements. Compress the lengths of packing material together at least ½-inch at splices (butt joints). Install packing material (Item 3A) using the following method: Install the packing material in the reveal created by the cantilevered tracks (Items 2B above the floor & 2C below the floor) and reinforcing angle (Item 3C). Install pieces of packing material (Item 3A) with fibers running vertically with the slip-track (deflection channel) (Item 2C). Cut lengths of the packing material a minimum of 4-1/4-inch high by minimum 2-1/4-inch wide for minimum 4-inch by 2-inch reveal. Use proportionate packing material for larger reveals. Overlap and compress the ends of the lengths of the packing material a minimum of 1/4-inch to be butted together.

B. CERTIFIED MANUFACTURER: Hilti, Inc.
CERTIFIED PRODUCT: Joint Spray or Sealant
MODEL: CP 672 Speed Spray or CP 672 Fast Cure or CFS-SP WB Firestop Joint Spray
Fill, Void or Cavity Material: Spray or brush apply in two locations: (1) over the interface of the inside vertical leg of the of the floor track (Item 2B) and the concrete floor assembly (Item 1) and (2) over the interface of the outside vertical leg of the floor track (Item 2B) and the inside face of the sandwiched wall surface (Item 2D). Fill, Void or Cavity material is not required behind the vertical studs. Application of the material is to start and stop on each side of each vertical stud. When alternate box sill is used, spray or brush apply liquid in two locations: (1) over the interface of the inside vertical face of the of the box sill (Item 2B) and the concrete floor assembly (Item 1) and (2) over the interface of the top of the box sill (Item 2B) and the inside face of the sandwiched wall surface (Item 2D). Apply a minimum wet film thickness of 1/8 inch and overlap the material a minimum 1/2 inch onto the adjacent curtain wall assembly (Item 2) and concrete floor assembly (Item 1). When the brushing or spraying process is stopped and the applied liquid cures to an elastomeric film before application process is restarted, then overlap the edge of the cured material at least 1/8 inch with the fresh material.

System No. CEJ 425 P (HI/BP 120-04)

PERIMETER FIRE BARRIER SYSTEM - ASTM E 2307

	CP 672 SPEED SPRAY	CP 672 FAST CURE	CFS-SP WB
F-RATING	2-HR.	2-HR.	2-HR.
T-RATING	1-HR.	3/4-HR.	1-HR.

HEAD OF WALL JOINT SYSTEM
ASTM E 2307-04 Section 14.1 Movement
Rated for ± 0% horizontal movement
Rated for - 100% downward vertical shear movement (3/4 inch) Class II 500 Cycles
Rated for + 0% upward vertical shear movement

C. Reinforcing Angle: Mount a minimum 20 GA, 1-1/2 inch x 3/4 inch galvanized steel angle continuously to the top of the slip-track (deflection channel) (Item 2C) using minimum # 6 x 1/2" framing screws with pan or hex head nominally 24-inches on center. Screws heads located on bottom of slip-track Position the reinforcing angle so that the 3/4 inch horizontal leg attaches the exposed top of the cantilevered slip-track (deflection channel) (Item 2C) and the 1-1/2 inch vertical leg is plumb with outside cantilevered edge of the floor track (Item 2B) above. Alternate: Mirror location from above mounting. Mount a minimum 20 GA, 1-1/2 inch x 3/4 inch galvanized steel angle continuously to the bottom track (Item 2B) using minimum #6 x 1.25-inch pan or hex head head SD PT screws nominally 24-inches on center. Position the reinforcing angle so that the 3/4 inch horizontal leg attaches the exposed bottom of the cantilevered bottom track (Item 2B) and the 1-1/2 inch vertical leg is plumb with outside cantilevered slip-track (deflection channel) (Item 2C) below. D. Steel Cover and Base: (Not shown) Use nominal 6-inch by 2-inch, 16 GA steel "C" channel, bottom track (Item 2B), to cover the packing material (Item 3A) and use nominal 6-inch by 2-inch, 16 GA steel "C" channel, slip-track (deflection channel) (Item 2C), to support the packing material (Item 3A). E. Optional Impaling Pins: (Not shown) When desired, use 12 GA steel pins swaged to nominal 2 x 2 inch galvanized steel base plate affixed maximum 16-inches on center to edge of concrete floor assembly (Item 1).

Hilti Firestop Systems

Reproduced by HILTI, Inc. Courtesy of Intertek Group November 05, 2010

Intertek

Classified by Underwriters Laboratories, Inc. to ASTM E2307

System No. CW-D-2026

F Rating — 2 Hr
T Rating — 1/4 Hr
Integrity Rating — 2 Hr
Insulation Rating — 1/4 Hr
Linear Opening Width — 8 In. Max
Class II Movement Capabilities — 5% Vertical Shear (See Item 3)

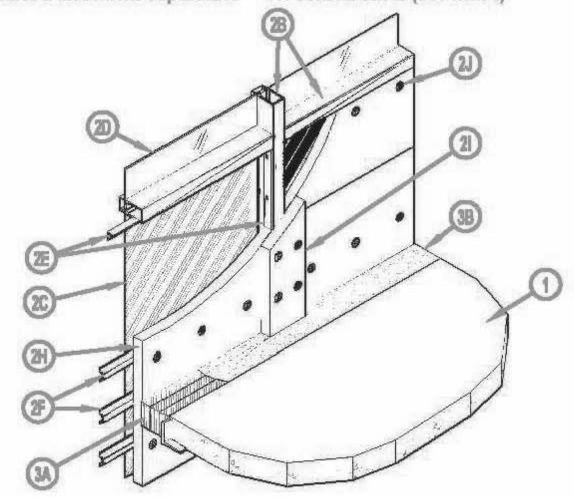

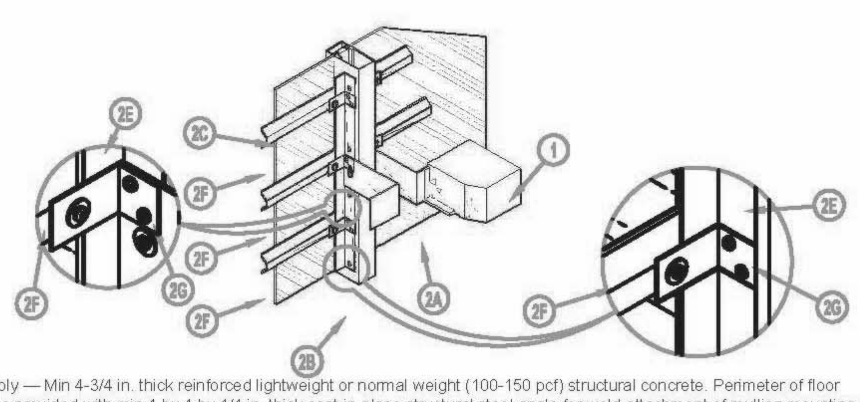

1. Floor Assembly — Min 4-3/4 in. thick reinforced lightweight or normal weight (100-150 pcf) structural concrete. Perimeter of floor assembly to be provided with min 4 by 4 by 1/4 in. thick cast-in-place structural steel angle for weld-attachment of mullion mounting clips (Item 2A).
2. Curtain Wall Assembly — The curtain wall assembly shall incorporate the following construction features:
   A. Mullion Mounting Clips — Min 4 in. long angles with one nom 4 in. leg for attachment to edge of floor assembly and with one leg approx 4 in. longer than distance to nearest face of mullion. Clips welded to steel angle at edge of floor assembly (Item 1) on each side of vertical mullion (Item 2B) at each floor level. Each clip to be provided with elongated holes to accommodate designed amount of movement. Top edge of each mounting angle to be recessed min 3/4 in. below top surface of floor.
   B. Framing — The rectangular tubing mullions (vertical members) and transoms (horizontal members) shall be min 2-1/2 in. wide by 5 in. deep and shall be formed from min 0.100 in. thick aluminum. Mullions spaced max 60 in. OC and secured to mullion mounting clips (Item 2A) at each floor level with two 1/2 in. diam by 4 in. long hex head steel bolts in conjunction with steel nuts and washers. Interior face of mullions to be max 8 in. from edge of floor assembly. Transoms framing top and bottom edges of spandrel panels (Item 2C) to be spaced min 72 in. OC. Transom forming sill of vision panel (Item 2D) to be located such that its bottom surface is at height of 33 in. above the top surface of the floor (Item 1).
   C. Spandrel Panels — Nom ¼ in. thick opaque heat-strengthened glass, nom 1/8 in. thick aluminum panels with 1/4 in. thick edges or nom 1-3/16 in. thick polished granite spandrel panels with 1 in. thick gauged edges. Each panel secured in position with aluminum pressure plates in conjunction with gaskets and steel screws.
   D. Vision Panels — Nom 1/4 in. thick transparent heat-strengthened glass. Each panel secured in position with aluminum pressure plates in conjunction with glazing gaskets and steel screws.
   E. Spandrel Panel Perimeter Angles — Nom 1-1/2 by 1-1/2 in. No. 22 gauge galvanized steel angles installed around entire perimeter of each spandrel panel. Angles recessed from interior face of framing as necessary to accommodate thickness of curtain wall insulation (Item 2H). Angles notched as necessary to be continuous over mullion mounting clips (Item 2A). Angles screw-attached to mullions and transom along sides and top of each spandrel panel with No. 10 by 1/2 in. long self-drilling, self-tapping steel screws spaced max 12 in. OC. Angle along bottom of each spandrel panel to be screw-attached to leg of angle on mullion at each end without any direct attachment to transom.
   F. Stiff Back Channel — Nom 2-1/2 in. wide by 7/8 in. deep hat-shaped channel formed of 22 gauge galv steel to be installed to stiffen curtain wall insulation between mullions above, below and at elevation of safing joint. One stiff back channel to be located with its centerline approx 6 in. below floor and one stiff back channel to be located with its centerline approx 6 in. above floor. A third stiff back channel is to be located near the midheight of the safing joint. A clearance of 1/4 to 1/2 in. shall be maintained between the ends of the stiff back channels and the mullions. Stiff back channel secured to mullion at each end with channel attachment clip (Item 2G) in conjunction with a No. 8 by 1/2 in. long self-drilling, self-tapping wafer head steel screw or a 3/16 in. diam steel bolt with nut and washer.
   G. Channel Attachment Clips — Nom 1-1/2 by 2-1/2 by 1-1/2 in. long angle formed of 16 gauge galv steel. The 2-1/2 in. leg is provided with a 1/4 in. wide by 1-1/2 in. long slot along its centerline for attachment of the stiff back channel. Clips secured to mullions mounting clips (Item 2A) and mullions, through perimeter angles, with two No. 10 by 1/2 in. long self-drilling, self-tapping steel screws. Channel attachment clips attached to mullion mounting clips to be provided with elongated holes to accommodate designed amount of movement. Channel clips installed with 2-1/2 in. leg recessed from interior face of mullion to accommodate thickness of curtain wall insulation (Item 2H).
   H. Curtain Wall Insulation* — Min 2 in. thick mineral wool board insulation, unfaced or faced on one side with aluminum foil/scrim vapor retarder, supplied in min 36 in. wide boards. Insulation boards to be installed with no vertical seams. A full-width board shall be centered at the midheight of floor and tightly fitted between vertical mullions, flush with interior surface of framing. The centered board shall be secured to the stiff back channels (Item 2F) located approx 6 in. above and below the floor with cup head weld pins (Item 2J) spaced max 10 in. OC along each channel. The remainder of the spandrel panel framing above and below the centered full-width board shall be filled in with additional lengths of board cut to fit tightly between mullions and with the horizontal seams between boards sections tightly butted. The boards shall be secured to the spandrel panel perimeter angles with cup head weld pins at each corner of each board and spaced max 10 in. OC. When faced boards are used, butted seams to be covered with min 4 in. wide aluminum foil tape.
   ROCKWOOL MALAYSIA SDN BHD — CurtainRock 80
   ROXUL INC — CurtainRock 80
   I. Framing Covers - Curtain Wall Insulation* — Min 8 in. wide strips cut from the same min 2 in. thick mineral wool batt insulation used for the curtain wall insulation (Item 2H). Framing covers to be centered over mullions, and secured to the spandrel panel perimeter angles (Item 2E) with cup head weld pins (Item 2J) spaced max 12 in. OC. Where more than one spandrel panel occurs between vertically separated vision panels, the horizontal transom between spandrel panels shall also be covered with an 8 in. wide framing cover in the same manner as on the vertical mullions. Framing covers on mullions to abut the mineral wool batt safing material (Item 3A) above and below floor.
   ROCKWOOL MALAYSIA SDN BHD — CurtainRock 80
   ROXUL INC — CurtainRock 80
   J. Weld Pin — No. 12 gauge galv steel weld pin with nom 1-3/16 in. diam galv steel cup head. Cup head weld pins provided in two lengths. One length to be equal to thickness of curtain wall insulation (Item 2H) and second length to be equal to thickness of curtain wall insulation plus thickness of framing cover (Item 2I). Cup head weld pins inserted through curtain wall insulation and mullion covers and welded to spandrel panel perimeter angles at max OC spacings referenced in Items 2H and 2I.
3. Safing System — Max separation between edge of floor assembly and face of framing member at time of installation is 8 in. The safing system is designed to accommodate vertical shear up to 5% of its installed width. - The safing system shall incorporate the following construction features:
   A. Forming Material* — Nom 4 in. thick, mineral wool batt safing material to be installed in continuous pieces between mullion clips. Safing material to be cut to a min 4-1/2 in. width and stacked to a thickness which is at least 25 percent greater than the width of the linear gap between the curtain wall and the edge of the concrete floor slab. The safing material is compressed and inserted cut-edge-first into the linear gap such that its top surface is recessed 1/4 in. from the top-surfaces of the floor assembly and such that it is friction-fit between mullion mounting angles. Additional pieces of safing material to be friction-fit into space between mullion mounting clips at each mullion location with top edges of mullion clips covered with a min 1/4 in. thickness of compressed safing material.
   ROCKWOOL MALAYSIA SDN BHD — SAFE
   ROXUL INC — SAFE
   B. Fill, Void or Cavity Material* — Min 1/4 in. thickness of fill material applied over top of forming material, flush with the top surface of the floor assembly.
   HILTI CONSTRUCTION CHEMICALS, DIV OF HILTI INC — CP 604 Self-Leveling Firestop Sealant

*Bearing the UL Classification Mark

Hilti Firestop Systems

Reproduced by HILTI, Inc. Courtesy of Underwriters Laboratories, Inc. April 22, 2011

System No. HI/BP 150-01

PERIMETER FIRE BARRIERS
Hilti Inc.
CP 672 Speed Spray

ASTM E 2307	ASTM E 2307/ASTM E 1399 Cycling	UL 2079
F-Rating – 150 Minutes	Class IV: 500 cycles @ 30 cpm	L-Rating- ≤1.0 SCFM/LF
T-Rating – 60 Minutes	± 12.5% horizontal movement	
	± 6.25% vertical shear movement	

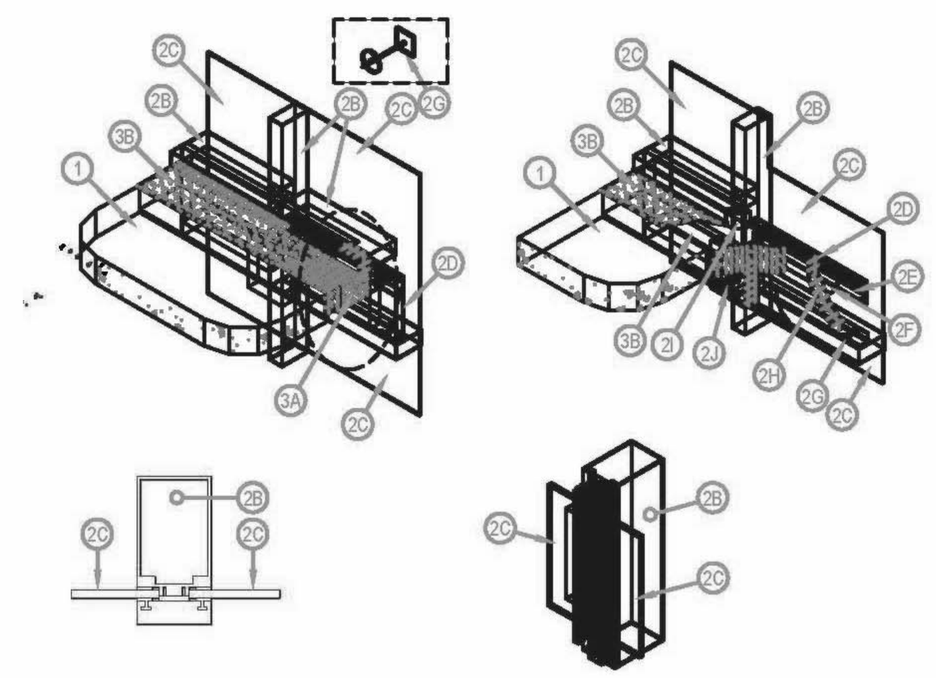

1. CONCRETE FLOOR ASSEMBLY: Two-hour rated concrete floor assembly made from either lightweight or normal weight concrete with a density of 100 to 150 pcf, having a minimum thickness of 4-1/2 inches at the joint face. When a longitudinal recess (blockout) is required to contain an architectural joint system, increase concrete floor assembly thickness to maintain a minimum thickness of 4-1/2-inches and accommodate depth of blockout formed in the concrete: blockout width unrestricted.
2. CURTAIN WALL ASSEMBLY: Incorporate the following construction features:
   A. Mounting Attachment: (Not shown) Attach the aluminum framing (Item 2B) to structural steel framing according to the curtain wall manufacturer's instructions. Connect mounting attachments to the joint face of the concrete floor assembly (Item 1) in accordance with the curtain wall manufacturer's instructions.
   B. Aluminum Framing: Use hollow rectangular aluminum extruded tubing with minimum overall dimensions of 0.100-inch thick, 3-3/4 inches high (total 5-5/16 inches high with mullion and transom covers) and 2-1/2 inches wide. Locate mullions minimum 60 inches on center and locate transoms a minimum 10 inches on center. For the spandrel region, locate the lower transom minimum 5-1/2 inches below the concrete floor assembly (Item 1) as measured from the underside of the floor to the top side of the transom and locate the upper transom as a minimum at the floor line as measured from the top surface of the concrete floor assembly (Item 1) to the underside of the transom.
   C. Glass Panels: Sized and installed into aluminum framing (Item 2B) according to the curtain wall system manufacturer's guidelines. Use minimum 1/4-inch thick clear, heat strengthened (HS) glass or tempered glass with a maximum width and height less than the aluminum framing (Item 2B) on center spacing, which allows the glass to be secured between the notched shoulder of the aluminum framing (Item 2B) and pressure bar. Secure glass panels with a thermal break (rubber extrusion), pressure bar (aluminum extrusion), minimum 1/4-20 x 5/8-inch long screws, and a snap face (aluminum extrusion).
   D. Perimeter Spandrel Angles: Use minimum 20 GA, galvanized steel angle with 1-1/2-inch x 1-1/2-inch legs and place around the entire inside perimeter of the aluminum framing (Item 2B) in spandrel area. Secure perimeter spandrel angles to the aluminum framing (Item 2B) using No. 10 sheet metal screws spaced maximum 8 inches on center.
   E. Reinforcing Angle: Place two 1-1/2 inch by 1-1/2 inch, 20 GA steel angles "back to back" to form a T-shape reinforcing angle that is continuous between the mullions of the Aluminum framing (Item 2B). Locate the T-shape reinforcing angle at the horizontal centerline of the packing material (Item 3A) and secure the T-shape reinforcing angle to the perimeter spandrel angles (Item 2D) using No. 10 sheet metal screws.
   F. Perimeter Fire Barrier Reinforcement: Use minimum 20 GA, steel angle having a 1-1/2-inch high vertical leg and a 1-1/2-inch wide horizontal leg. Fully embed horizontal leg into the packing material (Item 3A) at the centerline. Secure the vertical leg at each mullion interior face (aluminum framing – Item 2B) using at least two minimum 1/2-inch long, No. 10, sheet metal screws spaced nominally 1 inch on center. Install perimeter fire barrier reinforcement continuous along the length of the perimeter joint protection (Item 3). Overlap joints in the perimeter fire barrier reinforcement a minimum 12 inches and secure the overlap using at least three minimum 1/4-inch long, No. 10, sheet metal screws spaced nominally 4 inches on center, placed in both the vertical and horizontal legs.
   G. Impaling Pins: Attach curtain wall insulation (Item 2G) to the perimeter spandrel angle (Item 2D) using minimum 12 GA steel cup-head pins spaced maximum 8 inches on center at the centerline of the around the entire inside perimeter of the aluminum framing (Item 2B) in the spandrel area. Attach a minimum one impaling pin on the Perimeter Spandrel Angles (Item 2D) running in the horizontal direction. Size impaling pins to the curtain wall insulation (Item 2G) thickness to maintain a firm attachment to the perimeter spandrel angle (Item 2D). Install impaling pins so that the interior face of the curtain wall insulation (Item 2G) is flush with the interior face of the aluminum framing (Item 2B). When necessary, install additional impaling pins on either side of the aluminum framing (Item 2B) mullion, to accommodate installation of the mullion covers (Item 2J) so that four impaling pins are use to attach each cover.
   H. Curtain Wall Insulation: Use only Mineral Wool certified by Intertek, bearing an Intertek label, meeting the following requirements. A nominal 2-inch thick, 8 pcf, mineral wool batt insulation faced on one side with aluminum foil scrim (vapor retarder), which is exposed to the room interior and installed between and flush with interior face of aluminum framing (Item 2B). Secure the curtain wall insulation using impaling pins (Item 2H), which are attached to perimeter spandrel angles (Item 2D). Seal all meeting edges of curtain wall insulation with nominal 4-inch wide pressure sensitive aluminum foil faced tape centered over the junction so that approximately 2 inches of tape covers each edge of the adjacent curtain wall insulation. Apply pressure sensitive aluminum foil faced tape over all meeting edges of curtain wall insulation and aluminum framing (Item 2B) so that approximately 2 inches covers each edge of the adjacent material.
   I. Transom Cover: Use only Mineral Wool certified by Intertek, bearing an Intertek label, meeting the following requirements Make from strips of 2-inch thick 2-1/2-inch wide, 8 pcf density, mineral wool batt insulation faced on one side with aluminum foil scrim (vapor retarded), which is expose to the room interior. Install transom cover so as to continuously cover the top spandrel transom and on packing material (Item 3A). Attach to aluminum framing (Item 2B) using 3-inch long bugle head No. 6 course thread screws with a 1-1/2-inch diameter speed clip used as a washer on either side of the mullion. Allow transom cover to abut top of the packing material (Item 3A). Seal all meeting edges of transom covers with nominal 4-inch wide pressure sensitive aluminum foil faced tape over the junction so that approximately 3/4 inch of tape covers each edge of the adjacent aluminum framing (Item 2B).
   J. Mullion Covers: Use only Mineral Wool certified by Intertek, bearing an Intertek label, meeting the following requirements. Make 7-inch by 7-inch squares of 2-inch thick, 8-pcf density, mineral wool batt insulation faced on one side with aluminum foil scrim (vapor retarder), which is exposed to the room interior. Center framing covers over all aluminum framing (Item 2B) mullions and secure using impaling pins (Item 2H). Do not pass framing covers through the perimeter joint protection (Item 3). Allow framing covers to abut bottom surfaces of the packing material (Item 3A) provided that no deformation occurs.
3. PERIMETER JOINT PROTECTION: Do not exceed an 8 inch nominal joint width (joint width at installation). Incorporate the following construction features for the perimeter joint protection (also known as perimeter fire barrier system):
   A. Packing Material: Use only Mineral Wool certified by Intertek, bearing an Intertek label, meeting the following requirements. A minimum 4-inch thick, 4-pcf density, mineral wool batt insulation installed with the fibers running parallel to the edge of concrete floor assembly (Item 1) and curtain wall assembly (Item 2). Cut packing material width to achieve 20% compression when installed in the nominal joint width. Compress the packing material into the perimeter joint. Tightly compress together splices (butt joints) in the lengths of packing material by using minimum 1/4-inch compression per piece of packing material. Locate the top surface of the packing material flush with the top surface of the concrete floor assembly (Item 1).
   B. CERTIFIED MANUFACTURER: Hilti Corporation
   CERTIFIED PRODUCT: Joint Sealant
   MODEL: CP 672 Speed Spray or CFS-SP WB Firestop Joint Spray
   Fill, Void or Cavity Material: Spray apply to cover the exposed top surface of the packing material (Item 3A) compressed and installed in the perimeter joint. Apply a minimum wet film thickness of 1/8 inch and overlap the spray coating a minimum 1/2 inch onto the adjacent transom cover (Item 2I) and concrete floor assembly (Item 1). When the spraying process is stopped and the applied spray coating cures to an elastomeric film before installation process is restarted, then overlap the edge of the cured spray coating at least 1/8 inch with the liquid spray coating.

Hilti Firestop Systems

Reproduced by HILTI, Inc. Courtesy of Intertek Group November 20, 2010

Intertek

Classified by Underwriters Laboratories, Inc. to ASTM E2307

System No. CW-D-2025

F Rating — 2 Hr
T Rating — 1/4 Hr
Linear Opening Width - 8 In. Max
Class II Movement Capabilities - 5% Vertical Shear (See Item 3)

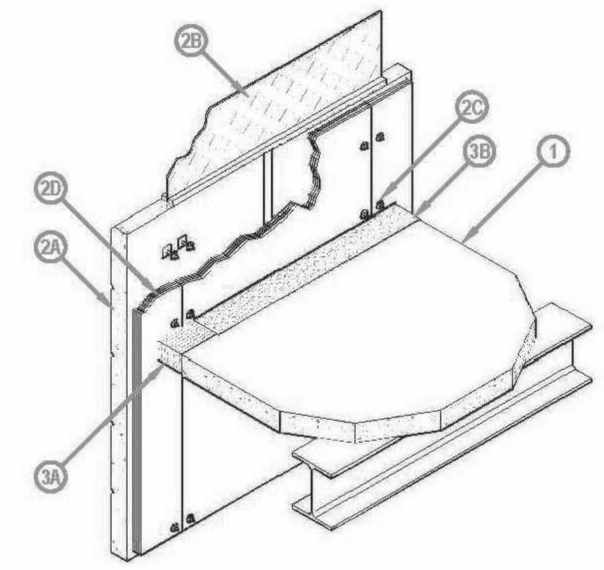

1. Floor Assembly — Min 4-1/2 in. (114 mm) thick steel-reinforced lightweight or normal weight (100-150 pcf or 1600-2400 kg/m³) structural concrete. Floor assembly to be supported at perimeter edges by spandrel beams having a Restrained or Unrestrained Beam Rating of 2 hr. Edge of concrete floor to be max 8 in. from interior surface of spandrel panel (Item 2A).
2. Curtain Wall Assembly — The curtain wall assembly shall incorporate the following construction features:
   A. Spandrel Panels — Min 36 in. (914 mm) high by min 4 in. (102 mm) thick steel-reinforced lightweight or normal weight (100-150 pcf or 1600-2400 kg/m³) structural concrete spandrel panels. Wall may also consist of min 4 in. (102 mm) thick steel-reinforced lightweight or normal weight concrete tilt-up panels with a min 36 in. (914 mm) vertical separation between window openings. Panels provided with steel dead load anchors welded to steel reinforcing bars embedded in the concrete for attachment to the steel columns and spandrel beams. Panels also provided with steel lateral anchors or braces. The dead load anchors, which are located in the linear gap between the concrete floor slab and the spandrel panel or tilt-up panel, are to be spaced max 72 in. (1829 mm) OC. The top of the dead load anchor is to be recessed min 1/2 in. (13 mm) from top surface of floor.
   B. Framed Window — Metal framed window with nom 1 in. thick (double pane) transparent heat-strengthened glass panels. Sill of window to be min 6 in. above top of floor.
   C. Impaling Pins — No. 12 gauge steel pins, min 1/2 in. (13 mm) longer than thickness of insulation boards (Item 2D), swaged to nom 2 by 2 in. (51 by 51 mm) galv steel base plate. Steel base plates secured to concrete spandrel panel with steel concrete screws or powder-driven steel fasteners. Impaling pins to be spaced 3 in. (76 mm) from edges of insulation boards (Item 2D) on each side of seams and spaced max 24 in. (610 mm) OC both vertically and horizontally. A min of two horizontal arrays of impaling pins are required to be located on spandrel panel above top surface of floor.
   C1. Clutch Clips — (Optional, Not Shown) - Nom 2 by 2 in. (51 by 51 mm) wide by 1-1/4 in. (32 mm) high V-shaped steel clutch clips used in conjunction with impaling pins (Item 2C) to offset curtain wall insulation (Item 2D) from spandrel panel (Item 2A). Clutch clips to be used on all impaling pins. When clutch clips are used, a row of impaling pins shall be located max 3 in. (76 mm) from top and bottom surfaces of floor assembly and spaced max 18 in. (457 mm) OC.
   D. Curtain Wall Insulation* — Min 2 in. (51 mm) thick mineral wool board insulation, faced on one side with aluminum foil/scrim vapor retarder, supplied in min 24 by 48 in. (610 by 1219 mm) boards. Insulation boards installed vertically with tightly-butted seams to cover interior surface of concrete spandrel panel. Horizontal seams of insulation boards (if necessary) to be located min 24 in. (610 mm) above and min 6 in. (152 mm) below planes of floor. Insulation boards secured to spandrel panel with impaling pins in conjunction with min 1-1/2 in. (38 mm) diameter galv steel clinch shields. Butted seams to be covered with aluminum foil tape.
   ROCKWOOL MALAYSIA SDN BHD — CurtainRock 80
   ROXUL INC — CurtainRock 80
3. Safing System — Max separation between edge of floor assembly and curtain wall insulation is 8 in. The safing system is designed to accommodate vertical shear movement of up to 5% of its installed width. The safing system shall incorporate the following construction features:
   A. Forming Material* — Mineral wool batt safing material to be cut into min 4-1/2 in. (114 mm) wide pieces and stacked to a thickness which is at least 25 percent greater than the width of the linear gap between the curtain wall insulation (Item 2D) and the edge of the concrete floor slab. The stacked safing material is compressed and inserted cut-edge-first into the linear gap such that its top surface is flush with the top surface of the floor assembly. A max of one tightly butted seam is permitted between spandrel panel attachment plates or tubes. An additional min 1/2 in. (13 mm) thick piece of mineral wool batt safing material is to be installed to cover top surface of each dead load anchor.
   ROCKWOOL MALAYSIA SDN BHD — SAFE
   ROXUL INC — SAFE
   B. Fill, Void or Cavity Material* — Min 1/8 in. (3.2 mm) wet thickness (1/16 in. or 1.6 mm dry) of fill material spray-applied over top of forming material and lapping min 1 in. (25 mm) onto the top surface of the concrete floor and onto the curtain wall insulation.
   HILTI CONSTRUCTION CHEMICALS, DIV OF HILTI INC — CP 672 Firestop Joint Spray, CP 672 FC Firestop Joint Spray or CFS-SP WB Firestop Joint Spray

*Bearing the UL Classification Mark

Hilti Firestop Systems

Reproduced by HILTI, Inc. Courtesy of Underwriters Laboratories, Inc. April 22, 2011

CRSA
649 E. South Temple
Salt Lake City, UT 84102
801.355.5915

MWL
11798 N. Lakeridge Pkwy.
Ashland, VA 23005
804-228-7473

State of Utah
Department of Administrative Services
Division of Facilities Construction & Management
DFCM
4110 State Office Building
Salt Lake City, Utah 84114
Phone: (801) 538 - 3018
Fax: (801) 538 - 3267

DIVISION OF FACILITIES CONSTRUCTION AND MANAGEMENT
REVIEWED FOR CODE COMPLIANCE
SIGNATURE: Enzo Calfa
DATE: 08-05-2014

STATE OF UTAH
#134098
MEHRDAD SAMIE
LICENSED ARCHITECT
04.28.2014
ARCHITECT-ENGINEER STAMP

Unified State Laboratory Module 2

4451 South 2700 West, Taylorsville, UT 84118

DFCM #: 13020300

Project #: B13-024

DATE:	ISSUE TYPE:
APRIL 21, 2014	BID SET
CHECKED BY	J. NIELSEN
DRAWN BY	F. PITORE

UL DETAILS

GF009

VOLUME 1

C:\Users\fernando\Documents_A_13024_ModII_2013_fernando.rvt
7/14/2014 1:11:56 PM

System No. WW-S-0042

Assembly Rating - 2 Hr
Joint Width - 1 In.
Max L Rating At Ambient - Less Than 1 CFM/Lin ft
L Rating At 400 F - Less Than 1 CFM/Lin ft

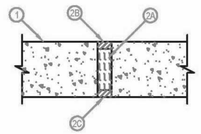

1. Wall Assembly — Min 4 in. thick reinforced lightweight or normal weight (100-150 pcf) structural concrete. Wall may also be constructed of any UL Classified Concrete Blocks *.
   See Concrete Blocks (CAZT) category in the Fire Resistance Directory for names of manufacturers.

2. Joint System — Max width of joint is 1 in. The joint system shall consist of forming and fill materials, as follows:
   A. Packing Material — Min 3 in. thickness of min 4 pcf mineral wool batt insulation firmly packed into joint opening as a permanent form. Packing material recessed from each surface of the wall as required to accommodate the required thickness of fill material.
   B. Fill, Void or Cavity Material* — Sealant — Min 1/2 in. thickness of fill material applied within the joint on exterior of wall, flush with wall surfaces.
   DOW CORNING CORP — 790 Sealant, 795 Sealant
   MOMENTIVE PERFORMANCE MATERIALS — Pensil 300 Sealant
   PECORA CORP — Dynatrol II Caulk, 864 Silicone Caulk
   C. Fill, Void or Cavity Material* — Sealant — Min 1/2 in. thickness of fill material applied within the joint on interior of wall, flush with wall surfaces.
   HILTI CONSTRUCTION CHEMICALS, DIV OF
   HILTI INC — CP601S Elastomeric Firestop Sealant or CP606 Flexible Firestop Sealant

*Bearing the UL Classification Mark

Hilti Firestop Systems

Reproduced by HILTI, Inc. Courtesy of Underwriters Laboratories, Inc. February 01, 2007

System No. CW-D-2027

F Rating — 2 Hr
T Rating — 1/4 Hr
Integrity Rating — 2 Hr
Insulation Rating — 1/4 Hr
Linear Opening Width — 8 In. Max
Class II Movement Capabilities — 5% Vertical Shear (See Item 3)

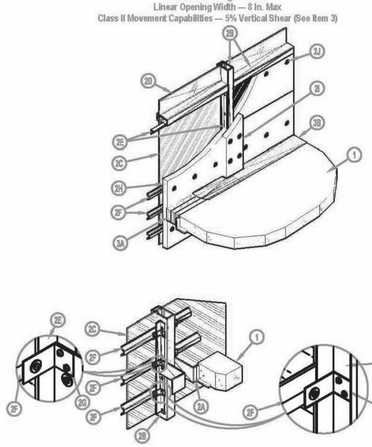

1. Floor Assembly — Min 4-1/2 in. (114 mm) thick reinforced lightweight or normal weight (100-150 pcf or 1600-2400 kg/m^3) structural concrete. Perimeter of floor assembly to be provided with min 4 by 4 by 1/4 in. thick cast-in-place structural steel angle for weld-attachment of mullion mounting clips (Item 2A).
2. Curtain Wall Assembly — The curtain wall assembly shall incorporate the following construction features:
   A. Mullion Mounting Clips — Min 4 in. (102 mm) long angles with one nom 4 in. (102 mm) leg for attachment to edge of floor assembly and with one leg approx 4 in. (102 mm) longer than distance to nearest face of mullion. Clips welded to steel angle at edge of floor assembly (Item 1) on each side of vertical mullion (Item 2B) at each floor level. Each clip to be provided with elongated holes to accommodate designed amount of movement. Top edge of each mounting angle to be recessed min 3/4 in. (19 mm) below top surface of floor.
   B. Framing — The rectangular tubing mullions (vertical members) and transoms (horizontal members) shall be min 2-1/2 in. (64 mm) wide by 5 in. (127 mm) deep and shall be formed from min 0.100 in. (2.5 mm) thick aluminum. Mullions spaced max 60 in. (1524 mm) OC and secured to mullion mounting clips (Item 2A) at each floor level with two 1/2 in. (13 mm) diam by 4 in. (102 mm) long hex head steel bolts in conjunction with steel nuts and washers. Interior face of mullions to be max 8 in. (203 mm) from edge of floor assembly. Transioms framing top and bottom edges of spandrel panels (Item 2C) to be spaced min 72 in. (1829 mm) OC. Transom forming sill of vision panel (Item 2D) to be located such that its bottom surface is at height of 33 in. (838 mm) above the top surface of the floor (Item 1).
   C. Spandrel Panels — Nom 1/4 in. (6 mm) thick opaque heat-strengthened glass, nom 1/8 in. (3.2 mm) thick aluminum panels with 1/4 in. (6 mm) thick edges or nom 1-3/16 in. (30 mm) thick polished granite spandrel panels with 1 in. (25 mm) thick gauged edges. Each panel secured in position with aluminum pressure plates in conjunction with gaskets and steel screws.
   D. Vision Panels — Nom 1/4 in. (6 mm) thick transparent heat-strengthened glass. Each panel secured in position with aluminum pressure plates in conjunction with glazing gaskets and steel screws.
   E. Spandrel Panel Perimeter Angles — Nom 1-1/2 by 1-1/2 in. (38 by 38 mm) No. 22 gauge galvanized steel angles installed around entire perimeter of each spandrel panel. Angles recessed from interior face of framing as necessary to accommodate thickness of curtain wall insulation (Item 2H). Angles notched as necessary to be continuous over mullion mounting clips (Item 2A). Angles screw-attached to mullions and transom along sides and top of each spandrel panel with No. 10 by 1/2 in. (13 mm) long self-drilling, self-tapping steel screws spaced max 12 in. (305 mm) OC. Angle along bottom of each spandrel panel to be screw-attached to leg of angle on mullion at each end without any direct attachment to transom.
   F. Stiff Back Channel — Nom 2-1/2 in. (64 mm) wide by 7/8 in. (22 mm) deep hat-shaped channel formed of 22 gauge galv steel to be installed to stiffen curtain wall insulation between mullions above, below and at elevation of safing joint. One stiff back channel to be located with its centerline approx 6 in. below floor and one stiff back channel to be located with its centerline approx 6 in. above floor. A third stiff back channel is to be located near the midheight of the safing joint. A clearance of 1/4 to 1/2 in. (6 to 13 mm) shall be maintained between the ends of the stiff back channels and the mullions. Stiff back channel secured to mullion at each end with channel attachment clip (Item 2G) in conjunction with a No. 8 by 1/2 in. (13 mm) long self-drilling, self-tapping wafer head steel screw or a 3/16 in. diam steel bolt with nut and washer.
   G. Channel Attachment Clips — Nom 1- 1/2 by 2-1/2 by 1-1/2 in. (38 by 64 by 38 mm) long angle formed of 16 gauge galv steel. The 2- 1/2 in. (64 mm) leg is provided with a 1/4 in. (6 mm) wide by 1- 1/2 in. (38 mm) long slot along its centerline for attachment of the stiff back channel. Clips secured to mullions mounting clips (Item 2A) and mullions, through perimeter angles, with two No. 10 by 1/2 in. (13 mm) long self-drilling, self-tapping steel screws. Channel attachment clips attached to mullion mounting clips to be provided with elongated holes to accommodate designed amount of movement. Channel clips installed with 2-1/2 in. (64 mm) leg recessed from interior face of mullion to accommodate thickness of curtain wall insulation (Item 2H).
   H. Curtain Wall Insulation* — Min 2 in. (51 mm) thick mineral wool board insulation; unfaced or faced on one side with aluminum foil/scrim vapor retarder, supplied in min 36 in. (914 mm) wide boards. Insulation boards to be installed with no vertical seams. A full-width board shall be centered at the midheight of floor and tightly fitted between vertical mullions, flush with interior surface of framing. The centered board shall be secured to the stiff back channels (Item 2F) located approx 6 in. (152 mm) above and below the floor with cup head weld pins (Item 2J) spaced max 10 in. (254 mm) OC along each channel. The remainder of the spandrel panel framing above and below the centered full-width board shall be filled in with additional lengths of board cut to fit tightly between mullions and with the horizontal seams between boards sections tightly butted. The boards shall be secured to the spandrel panel perimeter angles with cup head weld pins at each corner of each board and spaced max 10 in. (254 mm) OC. When faced boards are used, butted seams to be covered with min 4 in. (102 mm) wide aluminum foil tape.
   ROCKWOOL MALAYSIA SDN BHD — CurtainRock 80
   ROXUL INC — CurtainRock 80
   I. Framing Covers - Curtain Wall Insulation* — Min 8 in. (203 mm) wide strips cut from the same min 2 in. (51 mm) thick mineral wool batt insulation used for the curtain wall insulation (Item 2H). Framing covers to be centered over mullions, and secured to the spandrel panel perimeter angles (Item 2E) with cup head weld pins (Item 2J) spaced max 12 in. (305 mm) OC. Where more than one spandrel panel occurs between vertically separated vision panels, the horizontal transom between spandrel panels shall also be covered with an 8 in. (203 mm) wide framing cover in the same manner as on the vertical mullions. Framing covers on mullions to abut the mineral wool batt safing material (Item 3A) above and below floor.
   ROCKWOOL MALAYSIA SDN BHD — CurtainRock 80
   ROXUL INC — CurtainRock 80
   J. Weld Pin — No. 12 gauge galv steel weld pin with nom 1-3/16 in. (30 mm) diam galv steel cup head. Cup head weld pins provided in two lengths. One length to be equal to thickness of curtain wall insulation (Item 2H) and second length to be equal to thickness of curtain wall insulation plus thickness of framing cover (Item 2I). Cup head weld pins inserted through curtain wall insulation and mullion covers and welded to spandrel panel perimeter angles at max OC spacings referenced in Items 2H and 2I.
3. Safing System — Max separation between edge of floor assembly and face of framing member at time of installation is 8 in. (203 mm). The safing system is designed to accommodate vertical shear up to 5% of its installed width. The safing system shall incorporate the following construction features:
   A. Forming Material* — Nom 4 in. (102 mm) thick, mineral wool batt safing material to be installed in continuous pieces between mullion clips. Safing material to be cut to a min 4-1/2 in. (114 mm) width and stacked to a thickness which is at least 25 percent greater than the width of the linear gap between the curtain wall and the edge of the concrete floor slab. The safing material is compressed and inserted cut-edge-first into the linear gap such that its top surface is flush with the top-surface of the floor assembly and such that it is friction-fit between mullion mounting angles. Additional pieces of safing material to be friction-fit into space between mullion mounting clips at each mullion location with top edges of mullion clips covered with a min 1/2 in. (13 mm) thickness of compressed safing material.
   ROCKWOOL MALAYSIA SDN BHD — SAFE
   ROXUL INC — SAFE
   B. Fill, Void or Cavity Material* — Min 1/16 in. (1.6 mm) dry (1/8 in. or 3.2 mm wet) thickness of fill material applied over top of forming material and lapping min 1 in. onto top surface of concrete floor and onto the curtain wall insulation and framing covers.
   HILTI CONSTRUCTION CHEMICALS, DIV OF HILTI INC — CP 672 Firestop Joint Spray, CP 672 FC Firestop Joint Spray or CFS-SP WB Firestop Joint Spray

*Bearing the UL Classification Mark

Hilti Firestop Systems

Reproduced by HILTI, Inc. Courtesy of Underwriters Laboratories, Inc. April 22, 2011

System No. CW-D-1001

F Rating — 2 Hr
T Rating — 1/4 Hr
Linear Opening Width - 6 In. Max
Class II Movement Capabilities - 5% Vertical Shear (See Item 3)

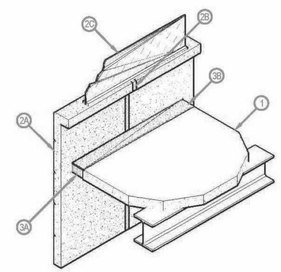

1. Floor Assembly — Min 4-1/2 in. (114 mm) thick steel-reinforced lightweight or normal weight (100-150 pcf or 1600-2400 kg/m3) structural concrete. Floor assembly to be supported at perimeter edges by spandrel beams having a Restrained or Unrestrained Beam Rating of 2 hr.
2. Curtain Wall Assembly — The curtain wall assembly shall incorporate the following construction features:
   A. Spandrel Panels — Min 36 in. (914 mm) high by min 4 in. (102 mm) thick steel-reinforced lightweight or normal weight (100-150 pcf or 1600-2400 kg/m3) structural concrete spandrel panels. Wall may also consist of min 4 in. (102 mm) thick steel-reinforced lightweight or normal weight concrete tilt-up panels with a min 36 in. (914 mm) vertical separation between window openings. Panels provided with steel dead load anchors welded to steel reinforcing bars embedded in the concrete for attachment to the steel columns and spandrel beams. Panels also provided with steel lateral anchors or braces. The dead load anchors which are located in the linear gap between the concrete floor slab and the spandrel panel or tilt-up panel are to be spaced max 72 in. (1829 mm) OC. The top of the dead load anchor is to be recessed min 1/2 in. (13 mm) from top surface of floor
   B. Joint System — (Not Shown) - Vertical joints between spandrel panels or tilt-up panels to be protected using Joint System No. WW-S-0042
   C. Framed Window — Metal framed window with nom 1/4 in. (6 mm) thick heat-strengthened glass. Sill of window to be min 6 in. (152 mm) above top of floor.
3. Safing System — Max separation between edge of floor assembly and concrete spandrel or tilt-up panel is 6 in. (152 mm). The safing system is designed to accommodate vertical shear movement of up to 5 percent of its installed width. The safing system shall incorporate the following construction features:
   A. Forming Material* — Nom 4 in. (102 mm) thick mineral wool batt safing material to be installed between the concrete spandrel or tilt-up panel and the edge of the concrete floor slab. Safing material to be cut to a min 4-1/4 in. (114 mm) width and stacked to a thickness which is at least 25 percent greater than the width of the linear gap between the concrete spandrel or tilt-up panel and the edge of the concrete floor slab. The safing material is compressed and inserted cut-edge-first into the linear gap such that its top surface is recessed min 1/4 in. below the top surface of the floor assembly. A max of one tightly-butted seam is permitted between dead load anchors. An additional min 1/2 in. thick piece of mineral wool batt safing material to be installed to cover top surface of each dead load anchor.
   THERMAFIBER INC — SAF
   B. Fill, Void or Cavity Material* — Min 1/8 in. (3.2 mm) wet thickness (1/16 in. or 1.6 mm dry) of fill material spray-applied over top of forming material and lapping min 1 in. (25 mm) onto the top surface of the concrete floor and onto the concrete spandrel panel or tilt-up panel.
   HILTI CONSTRUCTION CHEMICALS, DIV OF HILTI INC — CP 672 Firestop Joint Spray, CP 672 FC Firestop Joint Spray or CFS-SP WB Firestop Joint Spray

*Bearing the UL Classification Mark

Hilti Firestop Systems

Reproduced by HILTI, Inc. Courtesy of Underwriters Laboratories, Inc. June 04, 2010

System No. CW-D-1003

F Rating — 2 Hr
T Rating — 1/4 Hr
Linear Opening Width — 6 In. Max
Class II Movement Capabilities — 5% Vertical Shear (See Item 3)

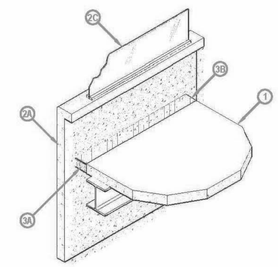

1. Floor Assembly — Min 4-1/2 in. thick steel-reinforced lightweight or normal weight (100-150 pcf) structural concrete. Floor assembly to be supported at perimeter edges by spandrel beams having a Restrained or Unrestrained Beam Rating of 2 hr.
2. Curtain Wall Assembly — The curtain wall assembly shall incorporate the following construction features:
   A. Spandrel Panels — Min 36 in. high by min 4 in. thick steel-reinforced lightweight or normal weight (100-150 pcf) structural concrete spandrel panels. Wall may also consist of min 4 in. thick steel-reinforced lightweight or normal weight concrete tilt-up panels with a min 36 in. vertical separation between window openings. Panels provided with steel dead load anchors welded to steel reinforcing bars embedded in the concrete for attachment to the steel columns and spandrel beams. Panels also provided with steel lateral anchors or braces. The dead load anchors which are located in the linear gap between the concrete floor slab and the spandrel panel or tilt-up panel are to be spaced max 72 in. OC. The top of the dead load anchor is to be recessed min 1/2 in. from top surface of floor
   B. Joint System — (Not Shown) - Vertical joints between spandrel panels or tilt-up panels to be protected using Joint System No. WW-S-0042
   C. Framed Window — Metal framed window with nom 1/4 in. thick heat-strengthened glass. Sill of window to be min 6 in. above top of floor.
3. Safing System — Max separation between edge of floor assembly and concrete spandrel or tilt-up panel is 6 in. The safing system is designed to accommodate vertical shear movement of up to 5 percent of its installed width. The safing system shall incorporate the following construction features:
   A. Forming Material* — Nom 4 in. thick mineral wool batt safing material to be installed between the concrete spandrel or tilt-up panel and the edge of the concrete floor slab. Safing material to be cut to a min 4-1/4 in. width and stacked to a thickness which is at least 25 percent greater than the width of the linear gap between the concrete spandrel or tilt-up panel and the edge of the concrete floor slab. The safing material is compressed and inserted cut-edge-first into the linear gap such that its top surface is recessed min 1/4 in. below the top surface of the floor assembly. A max of one tightly-butted seam is permitted between dead load anchors. An additional min 1/2 in. thick piece of mineral wool batt safing material to be installed to cover top surface of each dead load anchor.
   THERMAFIBER INC — SAF
   B. Fill, Void or Cavity Material* — Min 1/4 in. thickness of fill material applied over top of forming material flush with the top surface of the concrete floor and lapping onto the concrete spandrel panel or tilt-up panel.
   HILTI CONSTRUCTION CHEMICALS, DIV OF HILTI INC — CP604 Self Leveling Sealant

*Bearing the UL Classification Mark

Hilti Firestop Systems

Reproduced by HILTI, Inc. Courtesy of Underwriters Laboratories, Inc. April 08, 2009

CRSA
649 E. South Temple
Salt Lake City, UT 84102
801.355.5915

MWL
11798 N. Lakeridge Pkwy.
Ashland, VA 23005
804-228-7473

State of Utah
Department of Administrative Services
Division of Facilities Construction & Management
4110 State Office Building
Salt Lake City, Utah 84114
Phone: (801) 538 - 3018
Fax: (801) 538 - 3267

DIVISION OF FACILITIES CONSTRUCTION AND MANAGEMENT
REVIEWED FOR CODE COMPLIANCE
SIGNATURE: Ernie Cate
DATE: 08-05-2014

STATE OF UTAH
#134096
MEHRDAD SAMIE
LICENSED ARCHITECT
04-28-2014
ARCHITECT-ENGINEER STAMP

Unified State Laboratory Module 2

4451 South 2700 West,
Taylorsville, UT 84118

DFCM #: 13020300
Project #: B13-024

DATE:	ISSUE TYPE:
APRIL 21, 2014	BID SET
CHECKED BY	J. NIELSEN
DRAWN BY	F. PITORE

UL DETAILS

GF010

VOLUME 1

C:\Users\fernando\Documents_A_13024_Modli_2013_fernando.rvt
7/14/2014 1:12:02 PM

System No. C-AJ-1226

F Rating — 3 Hr
T Rating — 0 Hr
L Rating At Ambient — Less Than 1 CFM/Sq Ft
L Rating At 400 F — 4 CFM/Sq Ft

Classified by Underwriters Laboratories, Inc. to UL 1479 and CAN/ULC-S115

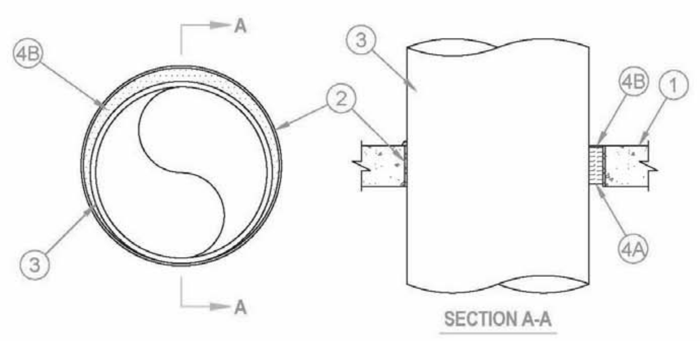

1. Floor or Wall Assembly — Min 4-1/2 in. thick reinforced lightweight or normal weight (100-150 pcf) concrete. Wall may also be constructed of any UL Classified Concrete Blocks*. Max diam of opening is 32 in.
2. Metallic Sleeve — (Optional) Nom 32 in. diam (or smaller) Schedule 40 (or heavier) steel sleeve cast or grouted into floor or wall assembly, flush with floor or wall surfaces or extending a max of 3 in. above floor or beyond both surfaces of wall.
2A. Sheet Metal Sleeve — (Optional) Max 6 in. diam, min 26 ga galv steel provided with a 26 ga galv steel square flange spot welded to the sleeve at approx mid-height, or flush with bottom of sleeve in floors, and sized to be a min of 2 in. larger than the sleeve diam. The sleeve is to be cast in place and may extend a max of 4 in. below the bottom of the deck and a max of 1 in. above the top surface of the concrete floor.
2B. Sheet Metal Sleeve — (Optional) - Max 12 in. diam, min 24 ga galv steel provided with a 24 ga galv steel square flange spot welded to the sleeve at approx mid-height, or flush with bottom of sleeve in floors, and sized to be a min of 2 in. larger than the sleeve diam. The sleeve is to be cast in place and may extend a max of 4 in. below the bottom of the deck and a max of 1 in. above the top surface of the concrete floor.
3. Through-Penetrant — One metallic pipe, tube or conduit to be installed either concentrically or eccentrically within the firestop system. The annular space between penetrant and periphery of opening shall be min 0 in. (point contact) to max 1-7/8 in. Penetrant may be installed with continuous point contact. Penetrant to be rigidly supported on both sides of floor or wall assembly. The following types and sizes of metallic penetrants may be used:
   A. Steel Pipe — Nom 30 in. diam (or smaller) Schedule 10 (or heavier) steel pipe.
   B. Iron Pipe — Nom 30 in. diam (or smaller) cast or ductile iron pipe.
   C. Copper Pipe — Nom 6 in. diam (or smaller) Regular (or heavier) copper pipe.
   D. Copper Tubing — Nom 6 in. diam (or smaller) Type L (or heavier) copper tubing.
   E. Conduit — Nom 6 in. diam (or smaller) steel conduit.
   F. Conduit — Nom 4 in. diam (or smaller) steel electrical metallic tubing (EMT).
4. Firestop System — The firestop system shall consist of the following:
   A. Packing Material — Min 4 in. thickness of min 4 pcf mineral wool batt insulation firmly packed into opening as a permanent form. Packing material to be recessed from top surface of floor or sleeve or from both surfaces of wall or sleeve as required to accommodate the required thickness of fill material.
   B. Fill, Void or Cavity Material* — Sealant — Min 1/4 in. thickness of fill material applied within the annulus, flush with top surface of floor or sleeve or with both surfaces of wall or sleeve. At the point or continuous contact locations between penetrant and concrete or sleeve, a min 1/4 in. diam bead of fill material shall be applied at the concrete or sleeve/ pipe penetrant interface on the top surface of floor and on both surfaces of wall.
   HILTI CONSTRUCTION CHEMICALS, DIV OF HILTI INC — FS-One Sealant

*Bearing the UL Classification Mark

Hilti Firestop Systems

Reproduced by HILTI, Inc. Courtesy of Underwriters Laboratories, Inc. June 27, 2007

System No. C-AJ-3180

F Rating - 3 Hr
T Rating = 0 Hr

Classified by Underwriters Laboratories, Inc. to UL 1479 and CAN/ULC-S115

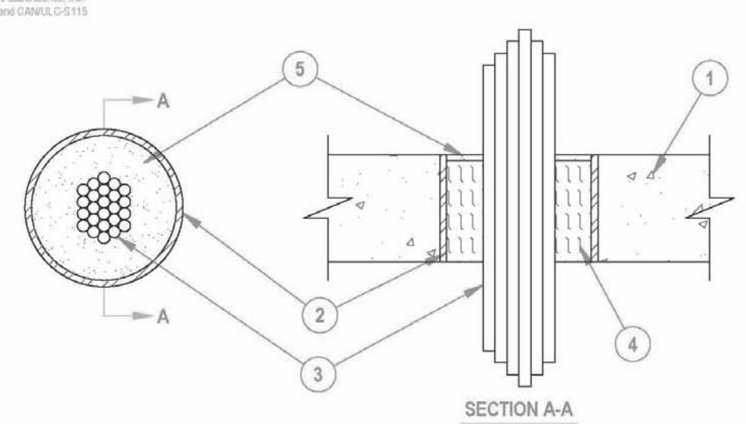

1. Floor or Wall Assembly — Min 4-1/2 in. (114 mm) thick reinforced lightweight or normal weight (100-150 pcf or 1600 2400 kg/m3) concrete floor or min 4-3/4 in. (121 mm) thick reinforced lightweight or normal weight concrete wall. Wall may also be constructed of any UL Classified Concrete Blocks*. Max diam of opening is 6 in.(152 mm).
   See Concrete Blocks (CAZT) category in the Fire Resistance Directory for names of manufacturers.
2. Steel Sleeve — (Optional) — Nom 6 in. (152 mm) diam (or smaller) Schedule 40 (or heavier) steel pipe cast or grouted into floor or wall assembly, flush with floor or wall surfaces.
3. Cables — Aggregate cross-sectional area of cables in opening to be max 45 percent of the aggregate cross-sectional area of the opening. Cables to be rigidly supported on both sides of floor or wall assembly. Any combination of the following types and sizes of metallic conductor or fiber optic cable may be used:
   A. Max 500 kcmil single copper connector power cable with thermoplastic insulation and polyvinyl chloride (PVC) jacket.
   B. Max 300 pair No. 24 AWG copper conductor telecommunication cables with polyvinyl chloride (PVC) insulation and jacket material.
   C. Max 7/C copper conductor No. 12 AWG multiconductor power and control cables with polyvinyl chloride (PVC) or cross-linked polyethylene (XLPE) insulation and PVC jacket.
   D. Multiple fiber optical communication cables jacketed with PVC and having a max outside diam of 1/2 in. (13 mm).
   E. Max 3/C copper conductor No. 12 AWG with bare aluminum ground, polyvinyl chloride (PVC) insulated steel, Metal-clad cable.
   F. Max 3/C with ground 2/0 AWG copper conductor SER cable with cross-linked polyethylene (XLPE) insulation and polyvinyl chloride (PVC) jacket.
   G. RG/U coaxial cable with polyethylene (PE) insulation and polyvinyl chloride (PVC) jacket having a max outside diameter of ½ in. (13 mm)
   H. Fire Resistive Cables* - Max 1-1/4 in. (32 mm) diam single conductor or multi conductor Type MI cable. A min 1/8 in. (3 mm) separation shall be maintained between MI cables and any other types of cable.
4. Packing Material — Min 4-1/4 in. (108 mm) thickness of min 4 pcf (64 kg/m3) mineral wool batt insulation firmly packed into opening as a permanent form. Packing material to be recessed from top surface of floor to accommodate the required thickness of fill material.
5. Fill, Void or Cavity Material* — Sealant — Min 1/4 in. (6.4 mm) thickness of fill material applied within the annulus, flush with top surface of floor or with both surfaces of wall.
   HILTI CONSTRUCTION CHEMICALS, DIV OF HILTI INC — FS-One Sealant.

*Bearing the UL Classification Mark

Hilti Firestop Systems

Reproduced by HILTI, Inc. Courtesy of Underwriters Laboratories, Inc. October 23, 2006

System No. C-AJ-6017

F Rating - 3 Hr.
T Rating = 0 Hr.

Classified by Underwriters Laboratories, Inc. to UL 1479 and CAN/ULC-S115

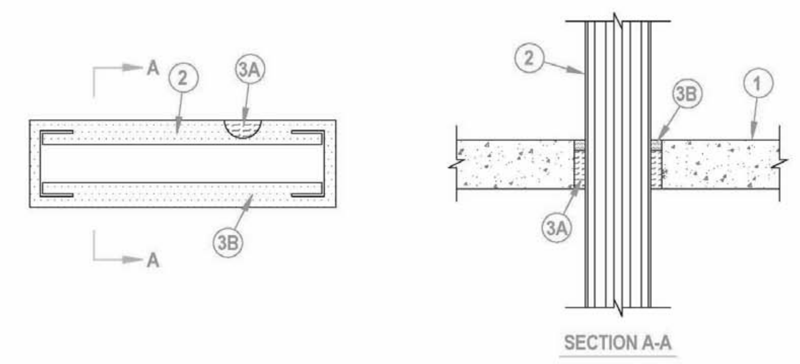

1. Floor or Wall Assembly Min 4-1/2 in. thick reinforced lightweight or normal weight (100-150 pcf) concrete. Wall may also be constructed of any UL Classified Concrete Blocks*. Max area of opening is 224 square in. with max dimension of 28 in.
   See Concrete Blocks (CAZT) category in the Fire Resistance Directory for names of manufacturers.
2. Busway+ Nominal 26 in. wide (or smaller) by 6 in. deep "I" shaped steel enclosure containing factory mounted aluminum bars rated for 600 V, 4000 A. One busway to be installed within the opening. the annular space between the flange tip of the busway and the periphery of the opening shall be 1 in. The annular space between the web of the busway and the periphery of the opening shall be 2 in. Busway to be ridged supported on both sides of floor and wall assembly. The busway shall bear the UL Listing Mark and shall be installed in accordance with all provisions of Article 364 of the National Electrical Code, NFPA No. 70.
3. Firestop System The firestop system shall consist of the following:
   A. Packing Material Min 3-1/2 in. thickness of min 4 pcf mineral wool batt insulation firmly packed into opening as a permanent form. Packing material to be recessed from top surface of floor or from both surfaces of wall as required to accommodate the required thickness of fill material.
   B. Fill, Void or Cavity Material* -- Sealant Min 1 in. thickness of fill material applied within the annulus, flush with top surface of floor or with both surfaces of wall.
   HILTI CONSTRUCTION CHEMICALS, DIV OF HILTI INC -- FS-ONE Sealant

+Bearing the UL Listing Mark
*Bearing UL Classification Mark

Hilti Firestop Systems

Reproduced by HILTI, Inc. Courtesy of Underwriters Laboratories, Inc. July 17, 1998

System No. C-AJ-8143

F Rating – 2 Hr
T Rating – 0 Hr

Classified by Underwriters Laboratories, Inc. to UL 1479 and CAN/ULC-S115

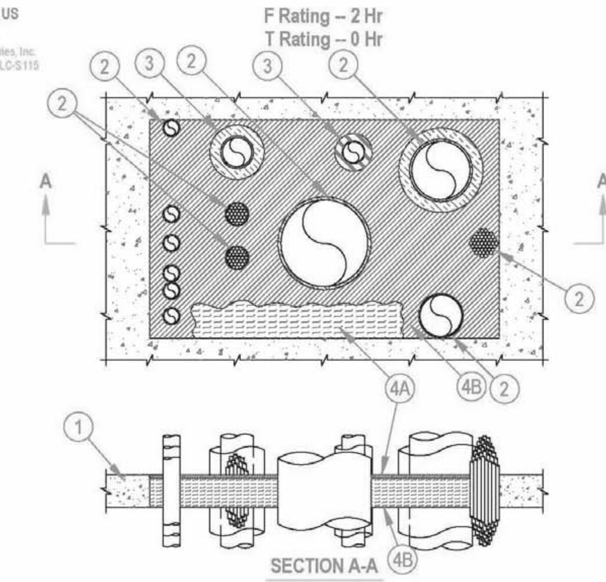

1. Floor or Wall Assembly — Min 4-1/2 in. (114 mm) thick reinforced lightweight or normal weight (100-150 pcf or 1600-2400 kg/m³) concrete floor. Min 5 in. (127 mm) thick reinforced lightweight or normal weight (100-150 pcf or 1600-2400 kg/m³) concrete wall. Wall may also be constructed of any UL Classified Concrete Blocks*. Max size of opening is 1440 in.2 (9,290 cm2) with a max dimension of 48 in. (1219 mm).
   See Concrete Blocks (CAZT) category in the Fire Resistance Directory for names of manufacturers.
2. Through-Penetrant — One cable tray and one or more pipes, tubes or cable bundles may be installed within the opening. The total number of through-penetrants is dependent on the size of the opening and the types and sizes of the penetrants. Any combination of the penetrants described below may be used provided that the following parameters relative to the annular spaces are maintained. The annular space between cable tray and all other penetrants shall be min 3 in. (76 mm). The annular space between individual cables and cable bundles shall be a min 1/2 in. (13 mm). The annular space between individual cables and cable bundles and other penetrants shall be a min 1/2 in. (13 mm) except that a min 2 in. (51 mm) shall be maintained between the cables and copper pipes and tubes greater than a nom 3 in. (76 mm) diam and steel and iron pipes and conduits greater than a nom 4 in. (102 mm) diam. The annular space between metallic pipes, conduit and tubes and insulated pipes and tubes shall be a min 2 in. (51 mm). The annular space between nom 3 in (76mm) diam (and smaller) copper pipes and tubes and between nom 4 in (102mm) diam (and smaller) steel and iron pipes and conduits shall be min 1/2 in. (13 mm). The annular space between nom 2 in. (51 mm) diam (and smaller) metallic pipes and conduits shall be min 0 in. (point contact). The annular space between insulated penetrants or the cable tray and the periphery of opening shall be min 1/2 in. (13 mm). The annular space between all other penetrants and the periphery of opening shall be min 0 in. (point contact). A max annular space in the system shall be 12 in. (305 mm). Penetrants to be rigidly supported on both sides of floor or wall assembly. The following types and sizes of penetrants may be used:
   A. Metallic Pipes — The following types of metallic pipes, tubes or conduits may be used:
      1. Copper Tubing — Nom 6 in. (152 mm) diam (or smaller) Type L (or heavier) copper tube.
      2. Copper Pipe — Nom 6 in. (152 mm) diam (or smaller) Regular (or heavier) copper pipe.
      3. Steel Pipe — Nom 24 in. (610 mm) diam (or smaller) Schedule 40 (or heavier) steel pipe.
      4. Iron Pipe — Nom 24 in. (610 mm) diam (or smaller) cast or ductile iron pipe.
      5. Conduit — Nom 4 in. (102 mm) diam (or smaller) electric metallic tubing (EMT) or nom 6 in. (152 mm) diam (or smaller) rigid steel conduit.
   B. Cables Bundles — Max 4 in. (102 mm) diam tightly bundled cables. Any combination of the following types and sizes of cables may be used:
      1. Max 500 kcmil single copper or aluminum conductor power cable with thermoplastic insulation and polyvinyl chloride (PVC) jacket.
      2. Max 300 pair No. 24 AWG copper conductor telecommunication cables with PVC insulation and jacket material.
      3. Max 7/C copper conductor No. 12 AWG multi-conductor power and control cables with PVC or cross-linked polyethylene (XLPE) insulation and PVC jacket.
      4. Multiple fiber optical communication cables jacketed with PVC and having a max outside diam of 1/2 in.
      5. Max 3/C No. 12 AWG steel clad cable with copper conductors and PVC insulation material.
   C. Individual Cables — Any of the following types and sizes of individual (non-bundled) cables may be used:
      1. Max 3/C No. 2/0 AWG (or smaller) copper conductor PVC jacketed aluminum clad or steel clad TECK 90 cable.
      2. Through Penetrating Product* — Any cables, Armored Cable+ or Metal Clad Cable+ currently Classified under the Through Penetrating Product category.
      See Through Penetrating Product (XHLY) category in the Fire Resistance Directory for names of manufacturers.
      3. Max 500 kcmil single copper or aluminum conductor power cable with thermoplastic insulation and polyvinyl chloride (PVC) jacket.
      4. Max 300 pair No. 24 AWG copper conductor telecommunication cables with PVC insulation and jacket material.
      5. Max 7/C copper conductor No. 12 AWG multi-conductor power and control cables with PVC or cross-linked polyethylene (XLPE) insulation and PVC jacket.
      6. Multiple fiber optical communication cables jacketed with PVC and having a max outside diam of 1/2 in.
      7. Max 3/C No. 12 AWG steel clad cable with copper conductors and PVC insulation material.
      8. Max 4C/750 kcmil (or smaller) aluminum or copper conductor metal clad cable with aluminum or steel armor, with or without PVC jacket.
   D. Cable Tray* — (Not Shown) — Max 24 in. (610 mm) wide by 6 in. (152 mm) deep open-ladder steel or aluminum cable tray. Aggregate cross-sectional area of cable tray to be max 40 percent of the cross-sectional area of the cable tray based on a max 3 in. cable loading depth. Any combination of the types and sizes of cables described in Item 2B may be used. Cable tray to be rigidly supported on both sides of floor or wall assembly.
3. Pipe Insulation — (Optional) - Pipes and tubes of the sizes noted below may be provided with one of the following types of pipe insulations::
   A. Pipe Covering* — Nom 1-1/2 in. (38 mm) thick (or thinner) hollow cylindrical heavy density glass fiber units jacketed on the outside with an all service jacket for pipes with a nom diam of 8 in. (203 mm) (or smaller) or tubes with a nom diam of 4 in. (102 mm) (or smaller). Longitudinal joints sealed with metal fasteners or factory-applied self-sealing lap tape. Transverse joints secured with metal fasteners or with butt tape supplied with the product.
   See Pipe and Equipment Covering - Materials (BRGU) category in the Building Materials Directory for names of manufacturers. Any pipe covering material meeting the above specifications and bearing the UL Classification Marking with a Flame Spread Index of 25 or less and a Smoke Developed Index of 50 or less may be used.
   B. Pipe Covering* — Nom 2 in. (51 mm) thick (or thinner) hollow cylindrical heavy density glass fiber units jacketed on the outside with an all service jacket for pipes or tubes with a nom diam of 2 in. (51 mm) (or smaller). Longitudinal joints sealed with metal fasteners or factory-applied self-sealing lap tape. Transverse joints secured with metal fasteners or with butt tape supplied with the product.
   See Pipe and Equipment Covering - Materials (BRGU) category in the Building Materials Directory for names of manufacturers. Any pipe covering material meeting the above specifications and bearing the UL Classification Marking with a Flame Spread Index of 25 or less and a Smoke Developed Index of 50 or less may be used.
   C. Tube Insulation-Plastics+ — Nom 1 in. (25 mm) thick (or thinner) acrylonitrile butadiene/polyvinyl chloride (AB/PVC) flexible foam furnished in the form of tubing for pipes or tubes with a nom diam of 2 in. (51 mm) (or smaller).
   See Plastics (QMFZ2) category in the Plastics Recognized Component Directory for names of manufacturers. Any Recognized Component tube insulation material meeting the above specifications and having a UL 94 Flammability Classification of 94-5VA may be used.
4. Firestop System — The firestop system shall consist of the following:
   A. Packing Material — Min 4 in. (102 mm) thickness of 4 pcf (64 kg/m³) mineral wool batt insulation tightly packed into the opening as a permanent form. Packing material to be recessed from top surface of floor or both surfaces of wall to accommodate the required thickness of fill material.
   B. Fill, Void or Cavity Material - Sealant* — Min 1/2 in. (13 mm) thickness of fill material applied within the annulus flush with the top surface of the floor or both surfaces of the wall.
   HILTI CONSTRUCTION CHEMICALS, DIV OF HILTI INC — FS-ONE Sealant

*Bearing the UL Classification Mark

Hilti Firestop Systems

Reproduced by HILTI, Inc. Courtesy of Underwriters Laboratories, Inc. July 18, 2011

System No. C-AJ-1388

F RATING = 2-HR
T RATING = 0-HR

Classified by Underwriters Laboratories, Inc. to UL 1479 and CAN/ULC-S115

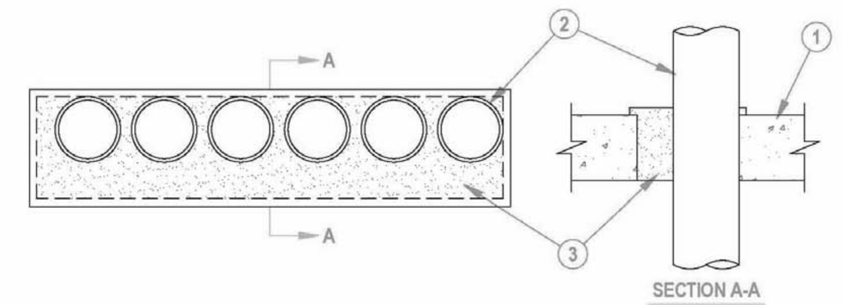

1. Floor or Wall Assembly Min 4-1/2 in. thick reinforced lightweight or normal weight (100-150 pcf) concrete. Wall may also be constructed of any UL Classified Concrete Blocks*. Max area of opening 224 sq in. with max dimension of 32 in.
   See Concrete Blocks (CAZT) in the Fire Resistance Directory for names of manufacturers.
2. Conduit One or more nom 4 in diam (or smaller) steel electrical metallic tubing or steel conduit to be installed either concentrically or eccentrically within the firestop system. The space between conduits or tubes shall be min 0 in. (point contact) to max 1/2 in. The annular space between the conduit or tube and periphery of opening shall be min 0 in. (point contact) to max 2-3/4 in. Conduit or tube to be rigidly supported on both sides of floor or wall assembly.
   Conduit - Nom 4 in. diam (or smaller) steel electrical metallic conduit or steel conduit.
3. Fill, Void or Cavity Material*- Foam Min 5 in. thickness of fill material applied within the annulus, extending 1/2 in. above the top surface of the floor or both surfaces of wall and overlapping the concrete 1/2 in. on all sides of the opening.
   HILTI CONSTRUCTION CHEMICALS, DIV OF HILTI INC -- CP 620 Fire Foam

*Bearing the UL Classification Mark

Hilti Firestop Systems

Reproduced by HILTI, Inc. Courtesy of Underwriters Laboratories, Inc. January 23, 2002

System No. C-AJ-4035

Classified by Underwriters Laboratories, Inc. to UL 1479 and CAN/ULC-S115

ANSI/UL1479 (ASTM E814)	CAN/ULC S115
F Rating — 3 Hr	F Rating — 3 Hr
T Rating — 0 Hr	FT Rating — 0 Hr
	FH Rating — 3 Hr
	FTH Rating — 0 Hr

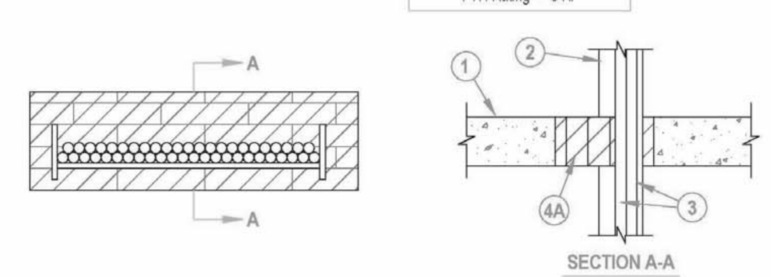

1. Floor or Wall Assembly — Min 4-1/2 in. (114 mm) thick reinforced lightweight or normal weight (100-150 pcf or 1600-2400 kg/m3) concrete. Wall may also be constructed of any UL Classified Concrete Blocks*. Max area of opening is 270 sq in (1742 cm2) with max dimension of 30 in. (762 mm).
   See Concrete Blocks (CAZT) category in the Fire Resistance Directory for names of manufacturers.
2. Cable Tray* — Max 24 in. (610 mm) wide by max 4 in. (102 mm) deep open-ladder or solid-back cable tray with channel-shaped side rails formed of 0.10 in. (2.54 mm) thick aluminum or 0.060 in. (1.52 mm) thick galv steel and with 1-1/2 in. (38 mm) wide by 1 in. (25 mm) channel shape rungs spaced 9 in. (229 mm) OC or a 0.029 in. (0.74 mm) thick steel solid back, respectively. The annular space between the cable tray and the periphery of the opening shall be min 1 in. (25 mm) to max 4 in. (102 mm). Cable tray to be rigidly supported on both sides of floor or wall assembly.
3. Cables — Aggregate cross-sectional area of cables in cable tray to be max 40 percent of the cross-sectional area of the cable tray. Any combination of the following types and sizes of copper conductor or fiber optic cables may be used:
   A. 1/C, 500 kcmil with thermoplastic insulation and PVC jacket.
   B. 300 pair — No. 24 AWG cable with PVC insulation and jacket.
   C. 24 fiberoptic cable with PVC subunit and jacket.
   D. Three 1/C No. 12 AWG wire, insulated with polyvinyl chloride, in a nominal 3/4 in. (19 mm) flexible metal conduit.
4. Firestop System — The firestop system shall consist of the following:
   A. Fill, Void or Cavity Material* — Fire blocks installed with the long dimension placed horizontally within the opening, flush with bottom of floor assembly or centered within wall opening. In concrete block walls, fire block to fill entire thickness of wall opening unless wall is solid filled. Blocks to be firmly packed and completely fill the entire width and height of opening. Either one or a combination of the block specified below may be used.
   HILTI CONSTRUCTION CHEMICALS, DIV OF HILTI INC — FS 657 Fire Block or CFS-BL Firestop Block
   B. Fill, Void or Cavity Material* -Sealant or Putty- Not Shown — Fill material to be forced into interstices of cables and between cables and cable trays to max extent possible on both surfaces of the penetration.
   HILTI CONSTRUCTION CHEMICALS, DIV OF HILTI INC — FS-One Sealant or CP618 Firestop Putty Stick

*Bearing the UL Classification Mark

Hilti Firestop Systems

Reproduced by HILTI, Inc. Courtesy of Underwriters Laboratories, Inc. December 12, 2011

System No. C-AJ-8110

Classified by Underwriters Laboratories, Inc. to UL 1479 and CAN/ULC-S115

ANSI/UL1479 (ASTM E814)	CAN/ULC S115
F Rating — 3 Hr	F Rating — 3 Hr
T Rating — 0 Hr	FT Rating — 0 Hr
	FH Rating — 3 Hr
	FTH Rating — 0 Hr

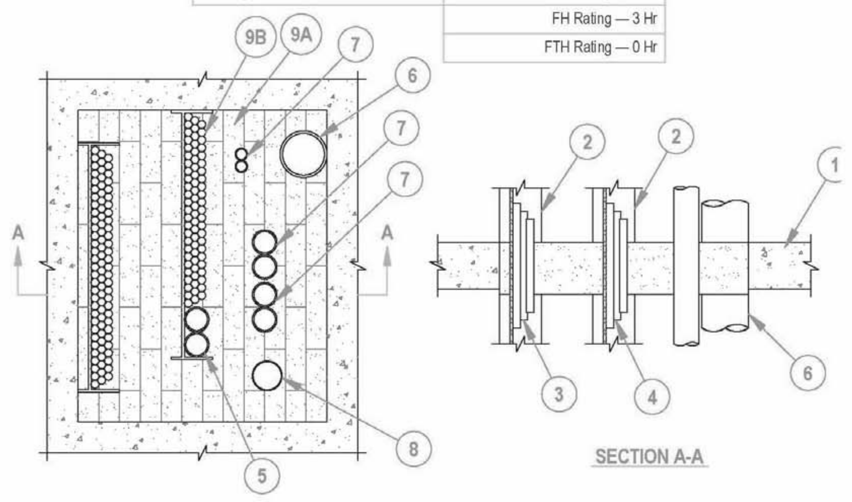

System tested with a pressure differential of 2.5 Pa between the exposed and the unexposed surfaces with the higher pressure on the exposed side.

1. Floor or Wall Assembly — Min 4-1/2 in. (114 mm) thick reinforced lightweight or normal weight (100-150 pcf or 1600-2400 kg/m3) concrete floor or concrete wall. Wall may also be constructed of any UL solid or filled Classified Concrete Blocks*. Max area of 720 sq in. (0.46 m2) with max dimension of 30 in. (762 mm).
   See Concrete Blocks (CAZT) category in the Fire Resistance Directory for names of manufacturers.
2. Cable Tray* — Max of two max 24 in (610 mm) wide by 4 in. (102 mm) deep open-ladder cable tray with channel-shaped side rails formed of 0.10 in. (2.5 mm) thick aluminum or 0.060 in. (.5 mm) thick steel and with 1 in. (25 mm) wide by 1 in. (25 mm) deep tubular channel-shaped rungs spaced 9 in. (229 mm) OC. The annular space between the periphery of the opening shall be min 0 in. (point contact) to max 3 in. (76 mm). Annular space between cable trays shall be 5 in. (127 mm) max. Cable tray to be rigidly supported on both sides of floor assembly.
3. Cables — Aggregate cross-sectional area of cables in cable tray to be max 45 percent of the cross-sectional area of the cable tray. Any combination of the following types and sizes of copper conductor cables may be used:
   A. 1/C, 750 kcmil (or smaller) power cable with polyvinyl chloride (PVC) insulation and jacket.
   B. 300 pair - No. 24 AWG telephone cable with PVC insulation and jacket.
   C. 24 fiber optic cable with PVC outer and subunit jacket.
   D. 3/C No. 12 AWG copper conductor steel clad cable with PVC insulation.
4. Cables — Aggregate cross-sectional area of cables in cable tray to be max 30 percent of the cross-sectional area of the cable tray. Any combination of the following types and sizes of copper conductor cables may be used:
   A. 1/C, 750 kcmil (or smaller) power cable with polyvinyl chloride (PVC) insulation and jacket.
   B. 100 pair - No. 24 AWG telephone cable with PVC insulation and jacket.
   C. 7/C No. 12 AWG cable with PVC insulation and jacket.
   D. 3/C (with ground) No. 12 AWG copper conductor non-metallic sheathed cable with PVC insulation and jacket.
5. Optical Fiber/Communication Cable Raceways+ — Nom 2 in. (51 mm) diam (or smaller) optical fiber raceway, formed from PVC. Raceway to be installed in accordance with the National Electrical Code (NFPA No. 70). Max two raceways placed into cable tray.
   See Optical Fiber/Communication Cable Raceways (QAZM) category in the Electrical Construction Materials Directory for names of manufacturers.
6. Metallic Penetrants - One metallic pipe or tubing to be installed within the firestop system. — The min annular space between the copper tube or pipe and the periphery of the opening shall be 0 in. (point contact). The min space between adjacent penetrants shall be 2 in. (51 mm). Tube or pipe to be rigidly supported on both sides of floor assembly. The following types and sizes of metallic pipe or tubing may be used:
   A. Steel Pipe — Nom 8 in. (203 mm) diam (or smaller) Schedule 10 (or heavier) steel pipe.
   B. Iron Pipe — Nom 8 in. (203 mm) diam (or smaller) cast or ductile iron pipe.
   C. Conduit — Nom 6 in. (152 mm) diam (or smaller) rigid steel conduit.
   D. Conduit — Nom 4 in. (102 mm) diam (or smaller) steel electrical metallic conduit.
   E. Copper Tubing — Nom 4 in. (102 mm) diam (or smaller) Type L (or heavier) copper tubing.
   F. Copper Pipe — Nom 4 in. (102 mm) diam (or smaller) Regular (or heavier) copper pipe.
7. Conduit — Max 2 in. (51 mm) diam (or smaller) steel electrical metallic tubing (EMT) or steel conduit. The annular space between the EMT and the periphery of the opening shall be min 2 in. (51 mm). The min space between adjacent penetrants shall be 1-1/2 in. (38 mm) except that a max of two EMT or conduit may be installed at point contact with one another. EMT or conduit to be rigidly supported on both sides of floor assembly.
8. Cable — 1800 pair - No. 24 AWG 01 ARMM telephone cable with PVC insulation and jacket. The annular space between the cable and the periphery of the opening shall be min 3-1/2 in. (89 mm). The min space between adjacent penetrants shall be 1-1/2 in. (38 mm). Cable to be rigidly supported on both sides of floor assembly.
9. Firestop System — The firestop system shall consist of the following:
   A. Fill, Void or Cavity Material* - Fire Blocks — Blocks installed with 5 in. (127 mm) dimension projecting through opening flush with top surface of floor or centered in wall. Blocks to be firmly packed to fill entire opening. Either one or a combination of the block types specified below may be used.
   HILTI CONSTRUCTION CHEMICALS, DIV OF HILTI INC — FS 657 Fire Block or CFS-BL Firestop Block
   B. Fill, Void or Cavity Material* — Fill material to be forced into interstices of cables, between cables and cable tray and in obvious openings between blocks and between blocks and the periphery of the opening to the max extent possible on both surfaces of wall.
   HILTI CONSTRUCTION CHEMICALS, DIV OF HILTI INC — FS-ONE Sealant, CP618 Firestop Putty Stick or CP 620 Fire Foam
   C. Wire Mesh — (Not Shown) When the annular space exceeds 4 in. to the periphery, a nom 2 by 2 in. (51 by 51 mm) wire fencing shall be used to keep the blocks in place. The wire fencing shall be fabricated from min No. 16 SWG (0.060 in. or 1.5 mm) galv steel wire. The wire is cut to fit the contour of the penetrating item with a min 3 in. (76 mm) overlap beyond the periphery of the opening. Wire fencing secured to top surface of floor and both surfaces of the wall assembly by means of 1/4 in. (6 mm) diam by 1 in. (25 mm) long steel concrete anchors and 1/4 in. (6 mm) by 1-1/2 in. (38 mm) diam fender washers spaced max 8 in. (203 mm) OC.

*Bearing the UL Classification Mark

Hilti Firestop Systems

Reproduced by HILTI, Inc. Courtesy of Underwriters Laboratories, Inc. January 13, 2012

System No. W-J-3060

F Rating - 2 Hr
T Rating - 0 Hr

Classified by Underwriters Laboratories, Inc. to UL 1479 and CAN/ULC-S115

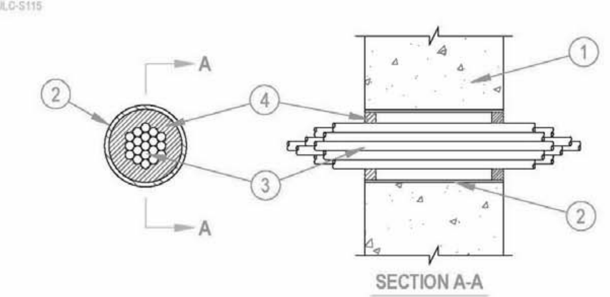

1. Wall Assembly — Min 5 in. (127 mm) thick reinforced lightweight or normal weight (100-150 pcf or 1600-2400kg/m concrete. Wall may also be constructed of any UL Classified Concrete Blocks*. Max diam of opening is 4 in (102 mm). Max diam of opening is 5-1/2 in. (138 mm) when sleeve (Item 2) is employed.
   See Concrete Blocks (CAZT) category in the Fire Resistance Directory for names of manufacturers.
2. Steel Sleeve — (Optional) — Nom 4 in. (102 mm) diam (or smaller) steel electrical metallic tubing (EMT) of Schedule 5 (or heavier) steel pipe or min 0.016 thick (28 MSG or 0.4 mm) galv steel sleeve friction fit or cast into wall flush with wall surfaces. When Schedule 5 steel pipe or EMT is used, sleeve may extend up to 18 in. (457 mm) beyond the wall surfaces. As an option when Schedule 5 steel pipe or EMT is used, sleeve may extend continuousl beyond one wall surface.
3. Cables — Aggregate cross sectional area of cables to be max 45 percent of the cross sectional area of the opening. Cables installed either concentrically or eccentrically within the firestop system. The annular space betwee cables and the periphery of the opening shall be min 0 in. (point contact) to max 1 in. (25 mm). Cables to be rigidly supported on both sides of wall assembly. The following types of cables may be used:
   A. 7/C No. 12 AWG cable with PVC insulation and outer jacket.
   B. Max 25 pair No. 24 AWG telephone cable with PVC insulation and outer jacket.
   C. Max RG 59 (or smaller) coaxial cable with polyethylene insulation and PVC jacket.
   D. Max RG 6/U coaxial cable with fluorinated ethylene insulation and jacketing.
   E. Multiple 24 fiber optic communication cable with PVC jacket, have a max outside diam of 5/8 in. (16 mm).
   F. Max four pair No. 22 AWG Cat 5 or Cat 6 computer cables.
   G. Through Penetrating Product*—Max three copper connector No. 8 AWG Metal-clad Cable+.
   AFC CABLE SYSTEMS INC
   H. Through Penetrating Product* — Any cables, Metal-Clad Cable+ or Armored Cable+ currently Classified under the Through Penetrating Products category.
   See Through Penetrating Product (XHLY) category in the Fire Resistance Directory for names of manufacturers.
4. Fill, Void or Cavity Material* — Sealant — Min 5/8 in. (16 mm) thickness of fill material applied within annulus, flusl with both surfaces of wall assembly. An additional 1/2 in. (13 mm) bead of fill material shall be applied around the perimeter of sleeve on both sides of the wall when sleeve extends beyond surface of wall.
   HILTI CONSTRUCTION CHEMICALS, DIV OF HILTI INC — CP601S Sealant, CP606 Sealant, FS-ONE Sealant or CP618 Putty

*Bearing the UL Classification Mark
+Bearing the UL Listing Mark

Hilti Firestop Systems

Reproduced by HILTI, Inc. Courtesy of Underwriters Laboratories, Inc. July 18, 2011

CRSA
649 E. South Temple
Salt Lake City, UT 84102
801.355.5915

MWL
11798 N. Lakeridge Pkwy.
Ashland, VA 23005
804-228-7473

State of Utah
Department of Administrative Services
Division of Facilities Construction & Management
DFCM
4110 State Office Building
Salt Lake City, Utah 84114
Phone: (801) 538 - 3018
Fax: (801) 538 - 3267

DIVISION OF FACILITIES CONSTRUCTION AND MANAGEMENT
REVIEWED FOR CODE COMPLIANCE
SIGNATURE: Enzo Calfa
DATE: 08-05-2014

STATE OF UTAH
#134096
MEHRDAD SAMIE
LICENSED ARCHITECT
04.28.2014
ARCHITECT-ENGINEER STAMP

Unified State Laboratory Module 2

4451 South 2700 West, Taylorsville, UT 84118

DFCM #: 13020300
Project #: B13-024

DATE:	ISSUE TYPE:
APRIL 21, 2014	BID SET
CHECKED BY	J. NIELSEN
DRAWN BY	F. PITORE

UL DETAILS

GF011

VOLUME 1

C:\Users\fernando\Documents\A_13024_ModII_2013_fernando.rvt
7/14/2014 1:12:14 PM

Classified by Underwriters Laboratories, Inc. to UL 1479 and CAN/ULC-S115

System No. W-L-1206

F Ratings — 1 and 2 Hr (See Items 1 and 4)
T Rating — 0 Hr

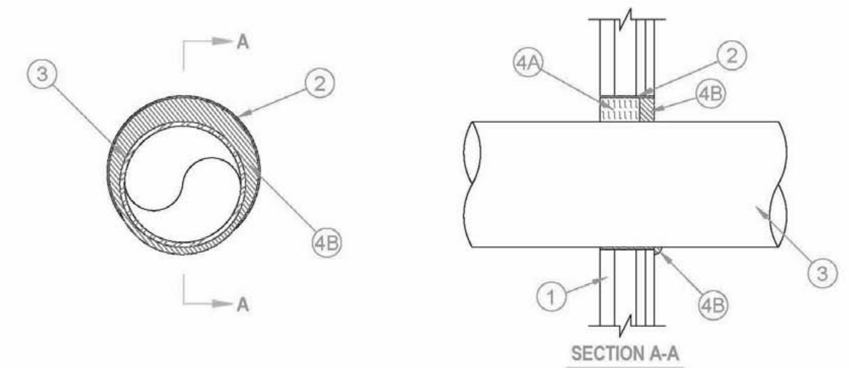

1. Wall Assembly — The fire-rated gypsum board/stud wall assembly shall be constructed of the materials and in the manner described in the individual U400 or V400 Series Wall and Partition Design in the UL Fire Resistance Directory and shall include the following construction features:
   A. Studs — "C-T" shaped studs 1-5/8 in. wide by 2-1/2 in. deep, fabricated from 25 MSG galv steel, spaced max 24 in. OC.
   B. Gypsum Board* — One layer of nom 1 in. thick, 24 in. wide gypsum liner and one or two layers of nom 5/8 in. thick, 4 ft. wide gypsum board with square or tapered edges. The gypsum board types, number of layers, fastener type and sheet orientation shall be as specified in the individual Wall and Partition Design. Max diam of opening is 10-1/2 in.

1A. Wall Assembly — As an alternate to the above wall assembly, the 1 or 2 Hr fire rated gypsum board/stud wall assembly shall be constructed of the materials and in the manner specified in the individual U300, U400 or V400 Series Wall and Partition Designs in the UL Fire Resistance Directory and shall include the following construction features:
   A. Studs — Wall framing may consist of either wood studs or steel channel studs. Steel studs to be min 2-1/2 in. wide and spaced max 24 in. OC. Wood studs to consist of nom 2 by 4 in. lumber spaced 16 in. OC.
   B. Gypsum Board* — Thickness, type, number of layers and fasteners as required in the individual Wall and Partition Design. Max diam of opening is 10-1/2 in.
   The hourly F Rating of the firestop system is equal to the hourly fire rating of the wall assembly in which it is installed.
2. Metallic Sleeve — Max 10-1/2 in. diam cylindrical sleeve fabricated from min 0.016 in. thick (28 gauge) galv sheet steel and having a min 1 in. lap along the longitudinal seam. Length of steel sleeve to be equal to thickness of wall. Sleeve installed by coiling the sheet steel to a diam smaller than the through opening, inserting the coil through the opening and releasing the coil to let it uncoil against the circular cutouts in the gypsum board layers. Sleeve may also be formed of No. 8 steel wire mesh having a min 1 in. lap along the longitudinal seam.
3. Through-Penetrants — One metallic pipe, conduit or tubing to be installed either concentrically or eccentrically within the firestop system. An annular space of min 0 in. (point contact) to max 1-7/8 in. is required within firestop system. Pipe, conduit or tubing to be rigidly supported on both sides of wall assembly. The following types and sizes of metallic pipes, conduits or tubing may be used:
   A. Steel Pipe — Nom 8 in. diam (or smaller) Schedule 10 (or heavier) steel pipe.
   B. Iron Pipe — Nom 8 in. diam (or smaller) cast or ductile iron pipe.
   C. Conduit — Nom 4 in. diam (or smaller) steel electrical metallic tubing or 4 in. diam steel conduit.
   D. Copper Tubing — Nom 4 in. diam (or smaller) Type L (or heavier) copper tubing.
   E. Copper Pipe — Nom 4 in. diam (or smaller) Regular (or heavier) copper pipe.
   F. Flexible Steel Conduit+ — Nom 2 in. diam (or smaller) flexible steel conduit.
   See Flexible Metal Conduit (DXUZ) category in the Electrical Construction Equipment Directory for names of manufacturers.
4. Firestop System — The firestop system shall consist of the following:
   A. Packing Material — Min 1-5/8 or 2-1/4 in. thickness of min 4 pcf mineral wool batt insulation firmly packed into sleeve on one side of the wall as permanent form for 1 and 2 Hr walls, respectively. Packing material to be recessed from the room side of wall as required to accommodate the required thickness of fill material. In alternate wall assembly, packing material to be flush with either side of the wall and recessed from the other side of the wall to accommodate the required thickness of fill material.
   B. Fill, Void or Cavity Material — Sealant* — Min 1-1/2 in. thickness applied within sleeve, flush with the surface of wall. At the point contact location between pipe and wall, a min 1/2 in. diam bead of fill material shall be applied at the pipe/wall interface.
   HILTI CONSTRUCTION CHEMICALS, DIV OF HILTI INC — FS-ONE Sealant

*Bearing the UL Classification Mark
+Bearing the UL Listing Mark

Hilti Firestop Systems

Reproduced by HILTI, Inc. Courtesy of Underwriters Laboratories, Inc. August 31, 2005

Classified by Underwriters Laboratories, Inc. to UL 1479 and CAN/ULC-S115

System No. F-A-8012

F Rating — 2 Hr
T Rating — 0 Hr

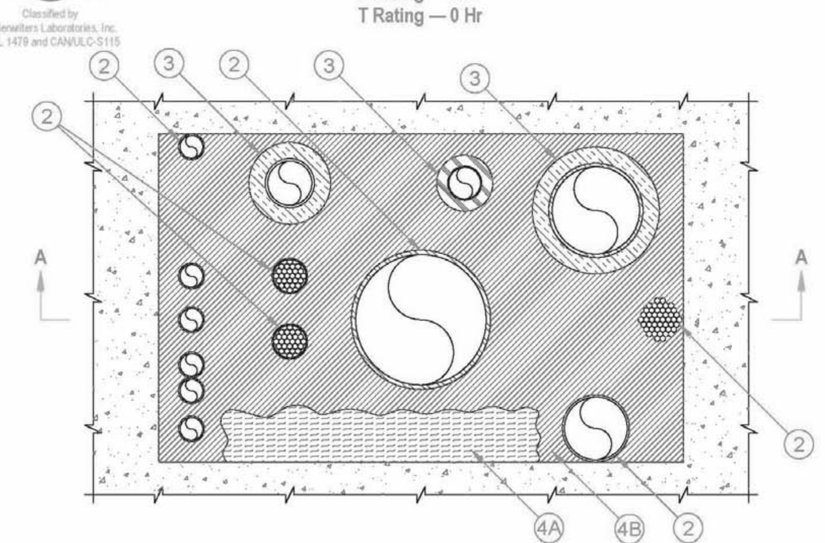

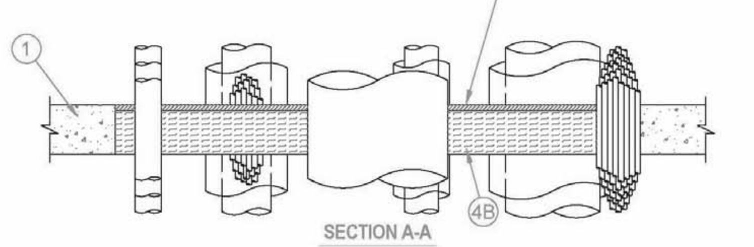

1. Floor Assembly — Min 4-1/2 in. (114 mm) thick reinforced lightweight or normal weight (100-150 pcf or 1600-2400 kg/m3) concrete. Max size of opening is 1440 in.2 (9,290 cm2) with a max dimension of 48 in. (1219 mm).
2. Through-Penetrants — One or more pipes, tubes or cable bundles to be installed within the opening. The total number of through-penetrants is dependent on the size of the opening and types and sizes of the penetrants. Any combination of the penetrants described below may be used provided that the following parameters relative to the annular spaces are maintained. The annular space between cable bundles and other penetrants shall be a min 6 in. (152 mm). The annular space between metallic pipes, conduit and tubes and insulated pipes and tubes shall be a min 2 in. (51 mm). The annular space between nom 2 in. (51 mm) diam (and smaller) metallic pipes, conduit and tubes shall be a min 0 in. (0 mm). The annular space between insulated penetrants and the periphery of opening shall be a min 1/2 in. (13 mm). The annular space between all other penetrants and the periphery of opening shall be a min 0 in. (0 mm) (point contact). A max annular space in the system shall be 12 in. (305 mm). Penetrants to be rigidly supported on both sides of floor assembly. The following types and sizes of penetrants may be used.
   A. Metallic Penetrants — The following types of metallic pipes, tubes or conduits may be used:
      1. Copper Tubing — Nom 6 in. (152 mm) diam (or smaller) Type L (or heavier) copper tube.
      2. Copper Pipe — Nom 6 in. (152 mm) diam (or smaller) Regular (or heavier) copper pipe.
      3. Steel Pipe — Nom 24 in. (610 mm) diam (or smaller) Schedule 40 (or heavier) steel pipe.
      4. Iron Pipe — Nom 24 in. (610 mm) diam (or smaller) cast or ductile iron pipe.
      5. Conduit — Nom 4 in. (102 mm) diam (or smaller) steel electric metallic tubing (EMT) or nom 6 in. (152 mm) diam (or smaller) rigid steel conduit.
   B. Cables Bundles — Max 4 in. (102 mm) diam tightly bundled cables. Any combination of the following types and sizes of cables may be used:
      1. Max 500 kcmil single copper or aluminum conductor power cable with thermoplastic insulation and polyvinyl chloride (PVC) jacket.
      2. Max 300 pair No. 24 AWG copper conductor telecommunication cables with PVC insulation and jacket material.
      3. Max 7/C copper conductor No. 12 AWG multi-conductor power and control cables with PVC or cross-linked polyethylene (XLPE) insulation and PVC jacket.
      4. Multiple fiber optical communication cables jacketed with PVC and having a max outside diam of 1/2 in.
      5. Max 3/C No. 12 AWG steel clad cable with copper conductors and PVC insulation material.
   C. Individual Cables — Any of the following types and sizes of individual (non-bundled) cables may be used:
      1. Max 3/C No. 2/0 AWG (or smaller) copper conductor PVC jacketed aluminum clad or steel clad TECK 90 cable.
      2. Through Penetrating Product* — Any cables, Armored Cable+ or Metal Clad Cable+ currently Classified under the Through Penetrating Product category.
      See Through Penetrating Product (XHLY) category in the Fire Resistance Directory for names of manufacturers.

3. Max 500 kcmil single copper or aluminum conductor power cable with thermoplastic insulation and polyvinyl chloride (PVC) jacket.
4. Max 300 pair No. 24 AWG copper conductor telecommunication cables with PVC insulation and jacket material.
5. Max 7/C copper conductor No. 12 AWG multi-conductor power and control cables with PVC or cross-linked polyethylene (XLPE) insulation and PVC jacket.
6. Multiple fiber optical communication cables jacketed with PVC and having a max outside diam of 1/2 in.
7. Max 3/C No. 12 AWG steel clad cable with copper conductors and PVC insulation material.
8. Max 4C/750 kcmil (or smaller) aluminum or copper conductor metal clad cable with aluminum or steel armor, with or without PVC jacket.

3. Pipe Insulation — (Optional) - Pipes and tubes of the sizes noted below may be provided with one of the following types of pipe insulations:
   A. Pipe Covering* — Nom 1-1/2 in. (38 mm) thick (or thinner) hollow cylindrical heavy density glass fiber units jacketed on the outside with an all service jacket for pipes with a nom diam of 8 in. (203 mm) (or smaller) or tubes with a nom diam of 4 in. (102 mm) (or smaller). Longitudinal joints sealed with metal fasteners or factory-applied self-sealing lap tape. Transverse joints secured with metal fasteners or with butt tape supplied with the product.
   See Pipe and Equipment Covering - Materials (BRGU) category in the Building Materials Directory for names of manufacturers. Any pipe covering material meeting the above specifications and bearing the UL Classifica tion Marking with a Flame Spread Index of 25 or less and a Smoke Developed Index of 50 or less may be used.
   B. Tube Insulation-Plastics+ — Nom 1 in. (25 mm) thick (or thinner) acrylonitrile butadiene/polyvinyl chloride (AB/PVC) flexible foam furnished in the form of tubing for pipes or tubes with a nom diam of 2 in. (51 mm) (or smaller).
   See Plastics (QMFZ2) category in the Plastics Recognized Component Directory for names of manufacturers. Any Recognized Component tube insulation material meeting the above specifications and having a UL 94 Flammability Classification of 94-5VA may be used.
4. Firestop System — The firestop system shall consist of the following:
   A. Packing Material — Min 4 in. (102 mm) thickness of 4 pcf (64 kg/m3) mineral wool batt insulation tightly packed into the opening as a permanent form. Packing material to be recessed from top surface of floor to accommodate the required thickness of fill material.
   B. Fill, Void or Cavity Material - Sealant* — Min 1/2 in. (13 mm) thickness of fill material applied within the annulus flush with the top surface of the floor.
   HILTI CONSTRUCTION CHEMICALS, DIV OF HILTI INC — CP604 Sealant

*Bearing the UL Classification Mark

Hilti Firestop Systems

Reproduced by HILTI, Inc. Courtesy of Underwriters Laboratories, Inc. June 29, 2004

Classified by Underwriters Laboratories, Inc. to UL 1479 and CAN/ULC-S115

System No. F-A-1105

ANSI/UL1479 (ASTM E814)	CAN/ULC S115
F Rating - 2 Hr	F Rating - 2 Hr
T Rating - 2 Hr	FT Rating - 2 Hr
L Rating At Ambient - Less Than 1 CFM/sq ft	FH Rating - 2 Hr
L Rating At 400 F - 4 CFM/sq ft	FTH Rating - 2 Hr
W Rating - Class 1 (See Item 3B)	L Rating At Ambient - Less Than 1 CFM/sq ft
	L Rating At 400 F - 4 CFM/sq ft

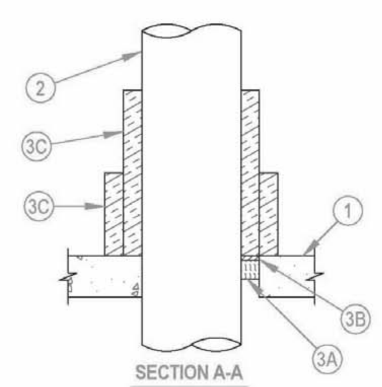

1. Floor Assembly — Min 4-1/2 in. (114 mm) thick reinforced lightweight or normal weight (100-150 pcf or 1600-2400 kg/m³) concrete. As an alternate, any min 2 hr fire rated D700, D800 or D900 Series Floor-Ceiling Design in the UL Fire Resistance Directory having a min 2-1/2 in. (64 mm) thickness of lightweight or normal weight (100-150 pcf or 1600-2400 kg/m³) concrete topping over the steel deck may be used. Max diam of opening is 12-3/4 in. (324 mm).
2. Through-Penetrant — One metallic pipe installed concentrically or eccentrically within opening. Annular space between penetrant and periphery of opening shall be min of 0 in. (point contact) to max 2 in. (51 mm). Penetrant to be rigidly supported on both sides of floor assembly. The following types and sizes of penetrants may be used:
   A. Steel Pipe — Nom 10 in. (254 mm) diam (or smaller) Schedule 40 (or heavier) steel pipe.
   B. Iron Pipe — Nom 10 in. (254 mm) diam (or smaller) cast or ductile iron pipe.
   C. Conduit — Nom 4 in. (102 mm) diam (or smaller) steel electrical metallic tubing or nom 6 in. (152 mm) diam (or smaller) rigid steel conduit.
3. Firestop System — The firestop system shall consist of the following:
   A. Packing Material — Min 2 in. (51 mm) thickness of min 4 pcf (64 kg/m³) mineral wool batt insulation firmly packed into opening as a permanent form. When CP 604 sealant is used (see Item 3B), min thickness of packing material is 4 in. (102 mm) and min thickness of floor is 4-1/2 in. (114 mm). Packing material to be recessed from top surface of floor to accommodate the required thickness of fill material.
   B. Fill, Void or Cavity Materials* - Sealant — Min 1/2 in. (13 mm) thickness of sealant applied within the annulus, flush with top surface of floor.
   HILTI CONSTRUCTION CHEMICALS, DIV OF HILTI INC — FS-ONE Sealant or CP 604 Self-Leveling Firestop Sealant
   W Rating applies only when CP 604 Sealant is used.
   C. Duct Wrap Material* — Encapsulated duct wrap tightly wrapped around penetrant to extend 24 in. (610 mm) above the floor for penetrants of nom 4 in. (102 mm) diam or smaller, and 36 in. (914 mm) above floor for penetrants greater than a nom 4 in. (102 mm) diam. An additional layer of encapsulated duct wrap tightly wrapped around the first layer of duct wrap to extend 12 in. (305 mm) (914 mm) above floor. All longitudinal seams of both layers of duct wrap and joints between layers of duct wrap are sealed with foil tape. One of the following types and thicknesses of duct wrap may be used:
   C1. Nom 1-1/2 in. (38 mm) or 2 in. (51 mm) thick encapsulated duct wrap.
   UNIFRAX I L L C — Fyrewrap Duct Insulation or FireWrap Duct 1.5 Insulation
   C2. Nom 1-1/2 in. (38 mm) thick encapsulated duct wrap.
   THERMAL CERAMICS INC — FireMaster FastWrap XL Duct Insulation

*Bearing the UL Classification Mark

Hilti Firestop Systems

Reproduced by HILTI, Inc. Courtesy of Underwriters Laboratories, Inc. August 09, 2011

Classified by Underwriters Laboratories, Inc. to UL 1479 and CAN/ULC-S115

System No. W-L-1054

F Ratings - 1 and 2 Hr (See Items 1 and 3)
T Rating - 0 Hr
L Rating At Ambient - Less Than 1 CFM/Sq Ft
L Rating At 400 F - 4 CFM/Sq Ft

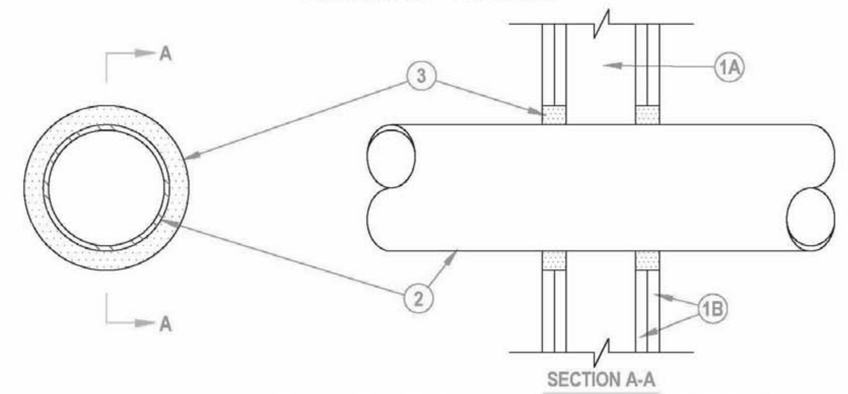

1. Wall Assembly -- The 1 or 2 hr fire-rated gypsum wallboard/stud wall assembly shall be constructed of the materials and in the manner specified in the individual U300 or U400 Series Wall and Partition Designs in the UL Fire Resistance Directory and shall include the following construction features:
   A. Studs -- Wall framing may consist of either wood studs or steel channel studs. Wood studs to consist of nom 2 by 4 in. lumber spaced 16 in. OC. Steel studs to be min 2-1/2 in. wide and spaced max 24 in. OC. When steel studs are used and the diam of opening exceeds the width of stud cavity, the opening shall be framed on all sides using lengths of steel stud installed between the vertical studs and screw-attached to the steel studs at each end. The framed opening in the wall shall be 4 to 6 in. wider and 4 to 6 in. higher than the diam of the penetrating item such that, when the penetrating item is installed in the opening, a 2 to 3 in. clearance is present between the penetrating item and the framing on all four sides.
   B. Gypsum Board* -- 5/8 in. thick, 4 ft wide with square or tapered edges. The gypsum board type, thickness, number of layers, fastener type and sheet orientation shall be as specified in the individual U300 or U400 Series Design in the UL Fire Resistance Directory. Max diam of opening is 32-1/4 in. for steel stud walls. Max diam of opening is 14-1/2 in. for wood stud walls. The F Rating of the firestop system is equal to the fire rating of the wall assembly.
2. Through-Penetrants -- One metallic pipe, conduit or tubing to be installed either concentrically or eccentrically within the firestop system. The annular space shall be min 0 in. to max 2-1/4 in. Pipe may be installed with continuous point contact. Pipe, conduit or tubing may be installed at an angle not greater than 45 degrees from perpendicular. Pipe, conduit or tubing to be rigidly supported on both sides of wall assembly. The following types and sizes of metallic pipes, conduits or tubing may be used:
   A. Steel Pipe -- Nom 30 in diam (or smaller) Schedule 10 (or heavier) steel pipe.
   B. Iron Pipe -- Nom 30 in. diam (or smaller) cast or ductile iron pipe.
   C. Conduit -- Nom 4 in diam (or smaller) steel electrical metallic tubing or 6 in. diam steel conduit.
   D. Copper Tubing -- Nom 6 in. diam (or smaller) Type L (or heavier) copper tubing.
   E. Copper Pipe -- Nom 6 in. diam (or smaller) regular (or heavier) copper pipe.
3. Fill, Void or Cavity Material* -- Sealant -- Min 5/8 in. thickness of fill material applied within the annulus, flush with both surfaces of wall. At the point or continuous contact locations between pipe and wall, a min 1/2 in. diam bead of fill material shall be applied at the pipe wall interface on both surfaces of wall .
   HILTI CONSTRUCTION CHEMICALS, DIV OF HILTI INC -- FS-One Sealant

*Bearing the UL Classification Mark

Hilti Firestop Systems

Reproduced by HILTI, Inc. Courtesy of Underwriters Laboratories, Inc. December 4, 2002

Classified by Underwriters Laboratories, Inc. to UL 1479 and CAN/ULC-S115

System No. W-L-1389

F Ratings — 1 and 2Hr (See Items 1 and 3)
T Rating — 0 Hr

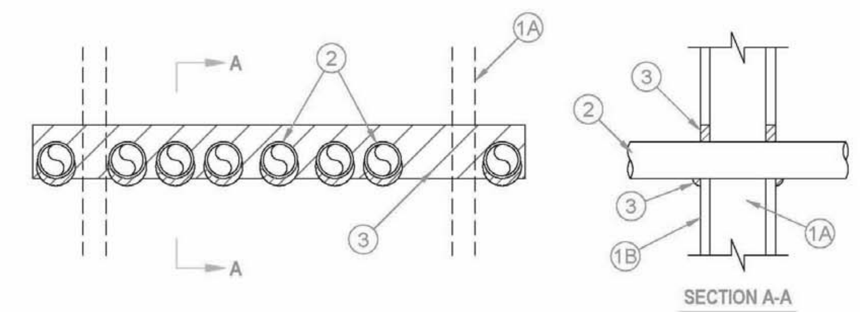

1. Wall Assembly — The 1 or 2 hr fire-rated gypsum board/stud wall assembly shall be constructed of the materials and in the manner described in the individual U400 or V400 Series Wall and Partition Designs in the UL Fire Resistance Directory and shall include the following construction features:
   A. Studs — Wall framing shall consist of min 3-5/8 in. (92 mm) wide steel studs spaced max 24 in. (610 mm) OC.
   B. Gypsum Board* — Thickness, type, number of layers and fasteners, as specified in the individual U400 or V400 Series Wall and Partition Design. Max height of opening is 3-1/2 in. (89 mm). Max width of opening is 32 in. (813 mm).
2. Through Penetrants — Multiple pipes or conduits installed in single layer array within the firestop system. The annular space between the pipes and conduits and the edges of the opening shall be min 0 in. (0 mm, point contact) to max 1-3/8 in. (35 mm). The separation between pipes and conduits to be a min 0 in. (0 mm, point contact) to a max 1-1/4 in. (32 mm). Pipes and conduits to be rigidly supported on both sides of wall assembly. The following types and sizes of metallic pipes or conduits may be used:
   A. Steel Pipe — Nom 2 in. (51 mm) diam (or smaller) Schedule 5 (or heavier) steel pipe.
   B. Conduit — Nom 2 in. (51 mm) diam (or smaller) rigid steel conduit or steel electrical metallic tubing (EMT).
3. Fill Void or Cavity Materials* - Sealant — Min 5/8 in. (16 mm) thickness of fill material installed to completely fill annular space between pipes, conduits and gypsum flush with each surface of wall. Min 1/2 in. (13 mm) diam bead of fill material applied to the through penetrant/wall interface at the point contact locations on both sides of the wall. The 2 hour F Rating applies only when FS-ONE Sealant is used.
   HILTI CONSTRUCTION CHEMICALS, DIV OF HILTI INC — Hilti CP 606 Flexible Firestop Sealant or FS-ONE Sealant

*Bearing the UL Classification Mark

Hilti Firestop Systems

Reproduced by HILTI, Inc. Courtesy of Underwriters Laboratories, Inc. September 05, 2006

Classified by Underwriters Laboratories, Inc. to UL 1479 and CAN/ULC-S115

System No. W-L-1408

F Rating - 1 or 2 Hr (See Item 1)
T Rating - 0 or 1/4 Hr (See Item 1)

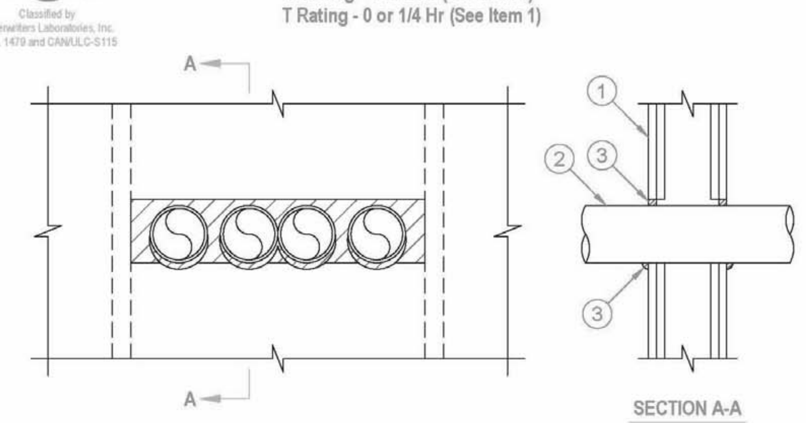

1. Wall Assembly — The 1 and 2 hr fire-rated gypsum board/stud wall assembly shall be constructed of the materials and in the manner described in the individual U400 or V400 Series Wall and Partition Designs in the UL Fire Resistance Directory and shall include the following construction features:
   A. Studs — Wall framing shall consist of min 3-5/8 in. (92 mm) wide steel studs spaced max 24 in. (610 mm) OC.
   B. Gypsum Board* — Thickness, type, number of layers and fasteners, as specified in the individual U400 or V400 Series Wall and Partition Design. Max area or opening is 114 in.2 (735 cm2) with max height of 5 in. (127 mm) and max width of 23 in. (584 mm).
   The hourly F Rating of the firestop system is equal to the hourly rating of the wall. The hourly T Rating of the firestop system is 0 hr and 1/4 hr when installed in 1 hr and 2 hr fire rated wall assemblies, respectively.
2. Through Penetrants — Multiple pipes or conduits installed in single layer array within the firestop system. The annular space between the pipes and conduits and the edges of the opening shall be min 0 in. (0 mm, point contact) to max 1 in. (25 mm). The separation between pipes and conduits to be a min 0 in. (0 mm, point contact) to a max 1-1/2 in. (38 mm). Pipes and conduits to be rigidly supported on both sides of wall assembly. The following types and sizes of metallic pipes or conduits may be used:
   A. Steel Pipe — Nom 4 in. (102 mm) diam (or smaller) Schedule 5 (or heavier) steel pipe.
   B. Conduit — Nom 4 in. (102 mm) diam (or smaller) rigid steel conduit or steel electrical metallic tubing (EMT).
3. Fill Void or Cavity Materials* - Sealant — Min 5/8 in. (16 mm) thickness of fill material installed to completely fill annular space between pipes, conduits and gypsum flush with each surface of wall. Min 1/2 in. (13 mm) diam bead of fill material applied to the through penetrant/wall interface at the point contact locations on both sides of the wall.
   HILTI CONSTRUCTION CHEMICALS, DIV OF HILTI INC — FS-ONE Sealant

*Bearing the UL Classification Mark

Hilti Firestop Systems

Reproduced by HILTI, Inc. Courtesy of Underwriters Laboratories, Inc. September 05, 2006

Underwriters Laboratories, Inc. to UL 1479

System No. W-L-2075

F Ratings - 1 & 2 Hr (See Item 4)
T Ratings - 0 and 2 Hr (see Item 4)
L Rating At Ambient - Less Than 1 CFM/Sq Ft
L Rating At 400 F - 4 CFM/Sq Ft

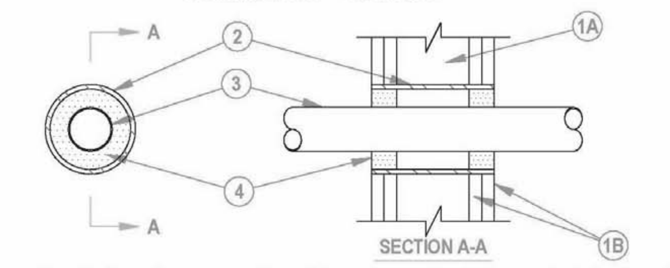

1. Floor or Wall Assembly -- The fire-rated gypsum wallboard/stud wall assembly shall be constructed of the materials and in the manner specified in the individual U300 or U400 Series Wall and Partition Designs in the UL Fire Resistance Directory and shall include the following construction features:
   A. Studs -- Wall framing may consist of either wood studs or steel channel studs. Wood studs to consist of nom 2 by 4 in. lumber spaced 16 in. OC. Steel studs to be min 2-1/2 in. wide and spaced max 24 in. OC.
   B. Gypsum Board* -- Nom 5/8 in. thick gypsum wallboard, as specified in the individual Wall and Partition Design. Max diam of opening is 4 in.
2. Metallic Sleeve -- (Optional) -- Nom 4 in. diam (or smaller) Schedule 40 (or thinner) steel pipe cast into wall assembly with joint compound and installed flush with wall surfaces.
3. Electrical Nonmetallic Tubing+ -- Nom 2 in. diam (or smaller) corrugated wall electrical nonmetallic tubing (ENT) constructed of polyvinyl chloride (PVC). Tubing to be rigidly supported on both sides of wall assembly. A nom annular space of 3/4 in. is required within the firestop system.
   See Electrical Nonmetallic Tubing (FKHU) category in the Electrical Construction Materials Directory for names of manufacturers.
4. Fill, Void or Cavity Material* -- Sealant -- Installed symmetrically on both sides of the wall. The hourly F Rating of the firestop system is equal to the hourly fire rating of the wall assembly in which it is installed. Fill material applied within the annulus, flush with each end of the steel sleeve at the thickness shown in the table below:

F Rating Hr	T Rating Hr	Fill Mtl Depth In.
1	0	5/8
2	2	1-1/4

HILTI CONSTRUCTION CHEMICALS, DIV OF HILTI INC -- FS-One Sealant
+Bearing the UL Listing Mark
*Bearing the UL Classification Marking

Hilti Firestop Systems

Reproduced by HILTI, Inc. Courtesy of Underwriters Laboratories, Inc. January 9, 2003

Classified by Underwriters Laboratories, Inc. to UL 1479 and CAN/ULC-S115

System No. W-L-1412

F Rating — 1 Hr
T Rating — 0 Hr

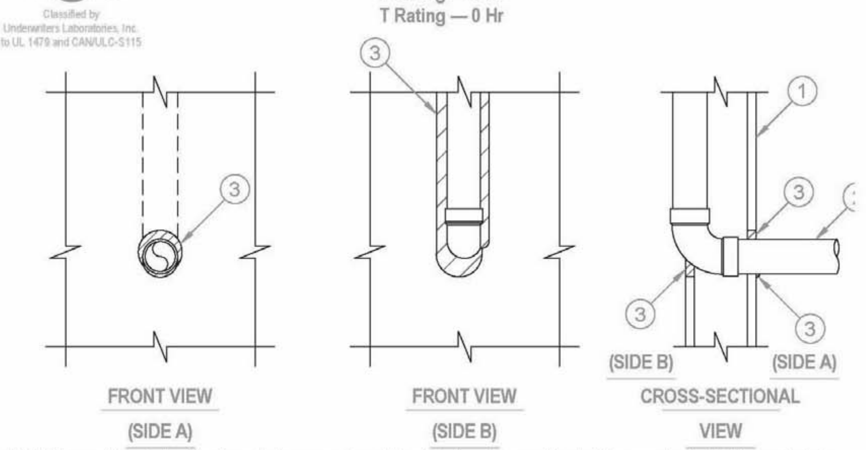

1. Wall Assembly — The 1 hr fire-rated gypsum board/steel stud wall assembly shall be constructed of the materials and in the manner specified in the individual U300, U400 or V400 Series Wall and Partition Designs in the UL Fire Resistance Directory and shall include the following construction features:
   A. Studs — Wall framing shall consist of steel channel studs. Wood studs to consist of nom 2 by 4 in. (51 by 102 mm) lumber spaced 16 in. (406 mm) OC. Steel studs to be min 3-5/8 in. (92 mm) wide and spaced max 24 in. (610 mm) OC.
   B. Gypsum Board* — Min 5/8 in. (16 mm) thick gypsum board. Max diam of opening shall be 3 in. (76 mm) on through penetration side. Maximum width of opening on membrane penetration is to be max 3 in. (76 mm).
2. Through Penetrant — One nom 2 in. (51 mm) pipe to be installed concentrically or eccentrically within opening on one side of the wall. On one side of the wall the pipe is allowed to penetrate the membrane continuously in a plane parallel with the wall and the studs. The annular space between the through penetrant and the periphery of opening shall be min 0 in. (0 mm, point contact) to max 3/4 in. (19 mm). Through penetrant to be rigidly supported on the through penetration side of the wall assembly. The following types and sizes of through penetrants may be used:
   A. Steel Pipe — Nom 2 in. (51 mm) diam (or smaller) Schedule 10 (or heavier) steel pipe.
   B. Iron Pipe — Nom 2 in. (51 mm) diam (or smaller) cast or ductile iron pipe.
   C. Conduit — Nom 2 in. (51 mm) diam (or smaller) rigid steel conduit or electrical metallic tubing (ENT).
3. Firestop System — Sealant — Min 5/8 in. (16 mm) thickness of fill material applied with annulus flush with both surfaces of the wall. Additional min 1/4 in. (6 mm) diam bead of fill material applied at the penetrant/gypsum board interface on both sides of wall.
   HILTI CONSTRUCTION CHEMICALS, DIV OF HILTI INC — FS-ONE Sealant

*Bearing the UL Classification Mark

Hilti Firestop Systems

Reproduced by HILTI, Inc. Courtesy of Underwriters Laboratories, Inc. May 24, 2007

Classified by Underwriters Laboratories, Inc. to UL 1479 and CAN/ULC-S115

System No. W-L-7130

F Ratings -- 1 and 2 Hr (See Item 1)
T Rating -- 0 Hr

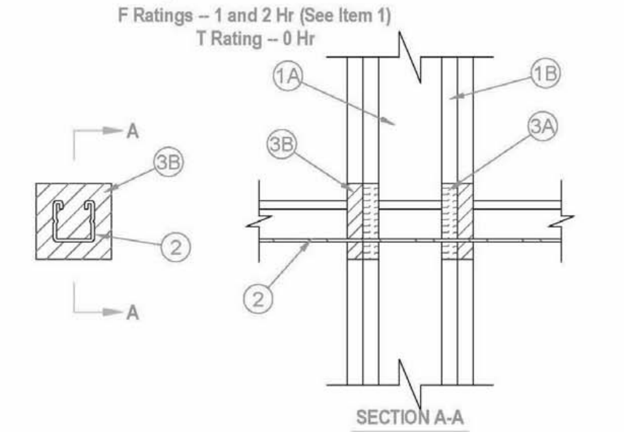

1. Wall Assembly -- The 1 or 2 hr fire-rated gypsum board/stud wall assembly shall be constructed of the materials and in the manner specified in the individual U300, U400 or V400 Series Wall and Partition Designs in the UL Fire Resistance Directory and shall include the following construction features:
   A. Studs -- Wall framing may consist of either wood studs or steel channel studs. Wood studs to consist of nom 2 by 4 in. (51 by 102 mm) lumber spaced max 16 in. (406 mm) OC. Steel studs to be min 2-1/2 in. (64 mm) wide and spaced max 24 in. (610 mm) OC.
   B. Gypsum Board* -- One or two layers of gypsum board, as specified in the individual Wall and Partition Design. Max area of rectangular opening is 15 sq in. (96 cm2) with max dimension of 5 in. (127 mm). In lieu of rectangular opening max diam of circular opening is 3 in. (76 mm).
   The F Rating of the firestop system is equal to the hourly fire rating of the wall assembly.
2. Through Penetrants -- One metallic strut, cable, rod or angle service support to be installed within the firestop system. An annular space of min 1/8 in. (3 mm) to max 7/8 in. (22 mm) is required within the firestop system. Strut, cable, rod or angle service support to be rigidly supported on both sides of floor or wall assembly. The strut, cable, rod or angle service support may be installed at an angle not greater than 45 degrees from the perpendicular. The following types and sizes of metallic strut, cable, rod or angle service support may be used:
   A. Steel Strut -- Max 1-5/8 by 1-5/8 in. (41 by 41 mm) channel strut formed from min 0.105 in. (2.7 mm) thick galv or painted steel.
   B. Steel Strut -- Max 3-1/4 by 1-5/8 in. (83 by 41 mm) H strut formed from min 0.105 in. (2.7 mm) thick galv or painted steel.
   C. Cable -- Max 3/8 in. (9.5 mm) diam unjacketed galv steel cable.
   D. Threaded Rod -- Max 1 in. (25 mm) diam galv steel threaded rod.
   E. Steel Angle -- 2 by 2 by 1/8 in. (51 by 51 by 3 mm) thick steel angle.
3. Firestop System -- The firestop system shall consist of the following:
   A. Packing Material -- Min 1/2 in. (13 mm) thickness of min 4 pcf (64 kg/m3) mineral wool batt insulation firmly packed into opening as a permanent form. Packing material to be located between penetrant and periphery of opening, and within channels of struts. Packing material to be recessed from both surfaces of wall to accommodate the required thickness of fill material. When through penetrant is oriented perpendicular to wall or when Type FS-ONE Sealant (Item 3B) is used, packing material is optional.
   B. Fill, Void or Cavity Material* - Sealant -- Min 5/8 in. (16 mm) thickness of fill material applied within the annulus and within the channel struts, flush with both surfaces of wall.
   HILTI CONSTRUCTION CHEMCIALS, DIV OF HILTI INC -- FS-ONE Sealant, CP 606 Sealant

*Bearing the UL Classification Mark

Reproduced by HILTI, Inc. Courtesy of Underwriters Laboratories, Inc.

CRSA
649 E. South Temple
Salt Lake City, UT 84102
801.355.5915

MWL
11798 N. Lakeridge Pkwy.
Ashland, VA 23005
804-228-7473

State of Utah
Department of Administrative Services
Division of Facilities Construction & Management
DFCM
4110 State Office Building
Salt Lake City, Utah 84114
Phone: (801) 538 - 3018
Fax: (801) 538 - 3267

DIVISION OF FACILITIES CONSTRUCTION AND MANAGEMENT
REVIEWED FOR CODE COMPLIANCE
SIGNATURE: Enzo Calfa
DATE: 08-05-2014

STATE OF UTAH
#134098
MEHRDAD SAMIE
LICENSED ARCHITECT
04.28.2014
ARCHITECT-ENGINEER STAMP

Unified State Laboratory Module 2

4451 South 2700 West,
Taylorsville, UT 84118

DFCM #:	13020300
Project #:	B13-024
DATE:	ISSUE TYPE:
APRIL 21, 2014	BID SET
CHECKED BY	J. NIELSEN
DRAWN BY	F. PITORE

UL DETAILS

GF012

VOLUME 1

C:\Users\fernando\Documents_A_13024_ModII_2013_fernando.rvt
7/14/2014 1:12:25 PM

System No. W-L-8013

Classified by Underwriters Laboratories, Inc. to UL 1479 and CAN/ULC-S115

ANSI/UL1479 (ASTM E814)	CAN/ULC S115
F Ratings — 1 and 2 Hr (See Item 1)	F Ratings — 1 and 2 Hr (See Item 1)
T Rating — 0 Hr	FT Rating — 0 Hr
L Rating At Ambient — 5 CFM/sq ft	FH Ratings — 1 and 2 Hr (See Item 1)
L Rating At 400 F — 2 CFM/sq ft	FTH Rating — 0 Hr
	L Rating At Ambient — 5 CFM/sq ft
	L Rating At 400 F — 2 CFM/sq ft

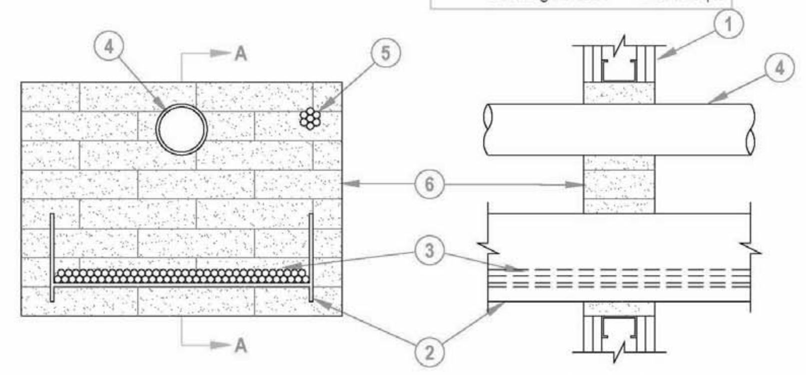

System tested with a pressure differential of 2.5 Pa between the exposed and the unexposed surfaces with the higher pressure on the exposed side.

1. Wall Assembly — The 1 or 2 hr fire-rated gypsum board/stud wall assembly shall be constructed of the materials and in the manner specified in the individual U300, U400, V400 or W400 Series Wall and Partition Designs in the UL Fire Resistance Directory and shall include the following construction features:
   A. Studs — Wall framing may consist of either wood studs or steel channel studs. Wood studs to consist of nom 2 in. (51 mm) by 4 in. (102 mm) lumber spaced 16 in. (406 mm) OC. Steel studs to be min 2-1/2 in. (64 mm) wide and spaced max 24 in. (610 mm) OC. Additional studs installed to completely frame the opening.
   B. Gypsum Board* — 5/8 in. (16 mm) thick, 4 ft (1219 mm) wide with square or tapered edges. The gypsum board type, thickness, number of layers, fastener type and sheet orientation shall be as specified in the individual Wall and Partition Design. Max area of opening is 352 sq in. (2271 sq cm) with max dimension of 22 in. (559 mm) wide.
   The hourly F and FH Ratings of the firestop system are equal to the hourly fire rating of the wall assembly in which it is installed.
2. Cable Tray* — Max 18 in. (457 mm) wide by max 6 in. (152 mm) deep open-ladder or solid-back cable tray with channel-shaped side rails formed of 0.065 in. (1.65 mm) thick aluminum or 0.060 in. (1.52 mm) thick steel and with 1-1/2 in. (38 mm) wide by 1 in. (25 mm) channel shape rungs spaced 9 in. (229 mm) OC or a 0.029 in. (0.74 mm) thick steel solid back, respectively. One cable tray to be installed in the opening. The max annular space between the cable tray and the periphery of the opening shall be min 1 in. (25 mm) to max 7 in. (178 mm) Cable tray to be rigidly supported on both sides of floor or wall assembly.
3. Cables — Aggregate cross-sectional area of cables in cable tray to be max 30 percent of the cross-sectional area of the cable tray. Any combination of the following types and sizes of copper conductor cables may be used:
   A. 7/C No. 12 AWG with polyvinyl chloride (PVC) insulation and PVC jacket.
   B. 100 pair - No. 24 AWG cable with PVC insulation and jacket.
   C. 1/C, 750 kcmil (or smaller) with PVC insulation and jacket.
4. Through-Penetrants — One or more pipe or tube to be installed within the opening. The total number of through-penetrants is dependent on the size of the opening and types and sizes of the penetrants. Any combination of the penetrants described below may be used provided that the following parameters relative to the annular spaces and the spacings between the pipes are maintained. The space between the pipe or tube and the periphery of the opening shall be min 1-1/2 in. (38 mm) to max 9-1/4 in. (235 mm). Pipe or tube to be rigidly supported on both sides of floor or wall assembly. The following types and sizes of non-metallic or metallic pipes, or tubes may be used:
   A. Polyvinyl Chloride (PVC) Pipe — Max 3 in. (76 mm) diam Schedule 40 solid core PVC pipe (or smaller) for use in closed (process or supply) or vented (drain, waste or vent) piping system.
   B. Steel Pipe — Nom 6 in. (152 mm) diam (or smaller) Schedule 40 (or heavier) steel pipe.
   C. Conduit — Nom 4 in. (102 mm) diam (or smaller) steel electrical metallic tubing or 6 in. (152 mm) diam steel conduit.
   D. Copper Pipe — Nom 4 in. (102 mm) diam (or smaller) Regular (or heavier) copper pipe.
   E. Copper Tube — Nom 4 in. (102 mm) diam (or smaller) Type L (or heavier) copper tube.

4A. Pipe Covering — (Not Shown) Nom 1-1/2 in. (38 mm) thick hollow cylindrical heavy density (min 3.5 pcf) (56kg/m³) glass fiber units jacketed on the outside with an all service jacket. Longitudinal joints sealed with metal fasteners or factory applied self-sealing lap tape. Transverse joints secured with metal fasteners or with butt tape supplied with the product.
   See Pipe and Equipment Covering and Materials (BRGU) category in the Building Materials Directory for names of manufacturers. Any pipe covering material meeting the above specifications and bearing the UL Classification Marking with a Flame Spread Index of 25 or less and a Smoke Developed Index of 50 may be used.

5. Cables — Max 1-1/2 in. (38 mm) diam tight bundle of cables installed within the opening and rigidly supported on both surfaces of wall. The space between the cables and periphery of the opening shall range from 1-3/16 in. (30.2 mm) min to a max of 1-1/2 in. (38 mm). Any combination of the following types and sizes of cables may be used:
   A. 7/C No. 12 AWG with polyvinyl chloride (PVC) insulation and jacket.
   B. 25 pair — No. 24 AWG cable with PVC insulation and jacket.
   C. Type R GU/59 coaxial cable with PVC outer jacket.
   D. 24 fiber optic cable with PVC sub unit and outer jacket.
6. Firestop System — The firestop system shall consist of the following:
   A. Fill, Void or Cavity Material* — Fire Blocks For walls incorporating max 3-5/8 in. (92 mm) steel studs or max 2 (51 mm) by 4 in. (102 mm) wood studs, fire block installed with 5 in. (127 mm) dimension projecting through and centered in opening. For walls constructed of larger steel or wood studs, fire block installed with long dimension passing through and centered in opening. Blocks may or may not be cut flush with both surfaces of wall. When multiple layers of gypsum board are used, blocks may be recessed 1/2 in. (13 mm) from surface of wall. Blocks to be firmly packed in opening. Either one or a combination of the block types specified below may be used.
   HILTI CONSTRUCTION CHEMICALS, DIV OF HILTI INC — FS 657 Fire Block or CFS-BL Firestop Block
   B. Fill, Void or Cavity Material* — Sealant or Putty - Fill material to be forced into interstices of cables, between cables and cable trays, around each penetrant and where obvious voids are observed to max extent possible on both surfaces of the penetration.
   HILTI CONSTRUCTION CHEMICALS, DIV OF HILTI INC — FS-One Sealant, CP 618 Putty Stick or CP620 Fire Foam

*Bearing the UL Classification Mark

Hilti Firestop Systems

Reproduced by HILTI, Inc. Courtesy of Underwriters Laboratories, Inc. January 13, 2012

System No. W-L-2244

Classified by Underwriters Laboratories, Inc. to UL 1479

F Ratings -- 1 and 2 Hr (See Item 1)
T Ratings -- 1 and 2 Hr (See Item 1)
L Rating at Ambient - Less Than 1 CFM/sq ft
L Rating at 400 F - 2 CFM/sq ft

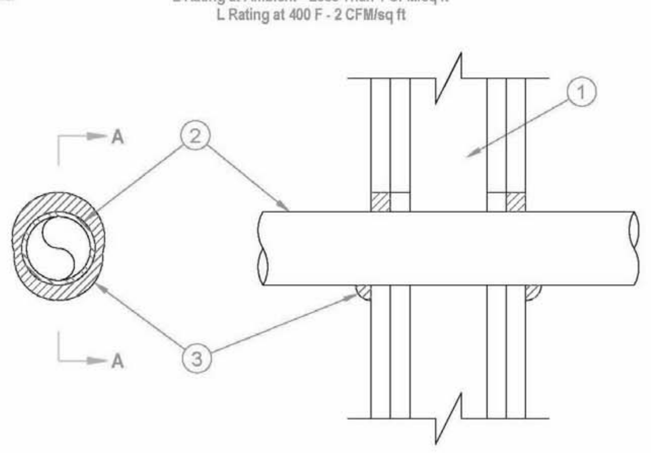

1. Wall Assembly -- The 1 and 2 hr fire rated gypsum board/stud wall assembly shall be constructed of the materials and in the manner described in the individual U300, U400 or V400 Series Wall and Partition Design in the UL Fire Resistance Directory and shall include the following construction features:
   A. Studs -- Wall framing shall consist of either wood studs or steel channel studs. Wood studs to consist of nom 2 by 4 in. (51 by 102 mm) lumber spaced 16 in. (406 mm) OC. Steel studs to be min 2-1/2 in. (64 mm) wide by 1-3/8 in. (35 mm) deep channels spaced max 24 in. (610 mm) OC.
   B. Gypsum Board* -- The gypsum board type, thickness, number of layers, fastener type and sheet orientation shall be as specified in the individual U300, U400 or V400 Series Design in the UL Fire Resistance Directory. Max diam of opening is 3 in. (76 mm).
   The hourly F and T Ratings of the firestop system are equal to the hourly fire rating of the wall assembly in which it is installed.
2. Through Penetrant -- One nonmetallic pipe, conduit or tubing installed either concentrically or eccentrically within the firestop system. The annular space between pipe and periphery of opening shall be min of 0 in. (point contact) to a max 5/8 in. .(16 mm). Pipe to be rigidly supported on both sides of wall assembly. The following types and sizes of nonmetallic pipes may be used:
   A. Polyvinyl Chloride (PVC) Pipe -- Nom 2 in. (51 mm) diam (or smaller) cellular or solid core Schedule 40 (or heavier) pipe for use in closed (process or supply) piping systems.
   B. Chlorinated Polyvinyl Chloride (CPVC) -- Nom 2 in. (51 mm) diam (or smaller) SDR 13.5 CPVC pipe for use in closed (process or supply) piping systems.
3. Fill, Void or Cavity Material* - Sealant -- Min 5/8 in. (16 mm) thickness of fill material applied within annulus, flush with both surfaces of wall. At point contact location, a min 1/2 in. (13 mm) diam bead of fill material shall be applied to the wall/penetrant interface on both surfaces of the wall.
   HILTI CONSTRUCTION CHEMICALS, DIV OF HILTI INC -- FS-ONE Sealant

*Bearing the UL Classification Mark

Hilti Firestop Systems

Reproduced by HILTI, Inc. Courtesy of Underwriters Laboratories, Inc. April 11, 2005

System No. W-L-4011

Classified by Underwriters Laboratories, Inc. to UL 1479 and CAN/ULC-S115

ANSI/UL1479 (ASTM E814)	CAN/ULC S115
F Ratings — 1 and 2 Hr (See Item 1)	F Ratings — 1 and 2 Hr (See Item 1)
T Rating — 0 Hr	FT Rating — 0 Hr
L Rating At Ambient — 5 CFM/sq ft	FH Ratings — 1 and 2 Hr (See Item 1)
L Rating At 400 F — 2 CFM/sq ft	FTH Rating — 0 Hr
	L Rating At Ambient — 5 CFM/sq ft
	L Rating At 400 F — 2 CFM/sq ft

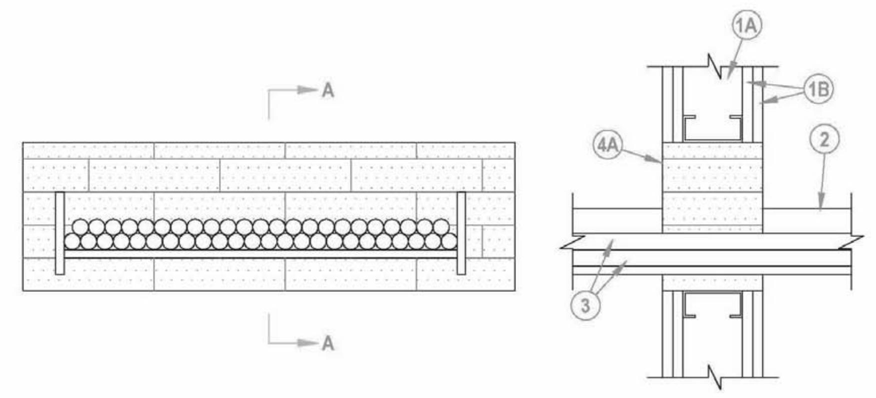

1. Wall Assembly — The 1 or 2 hr fire rated gypsum board/stud wall assembly shall be constructed of the materials and in the manner described in the individual U300, U400, V400 or W400 Series Wall and Partition Designs in the UL Fire Resistance Directory and shall include the following construction features:
   A. Studs — Wall framing may consist of either wood studs or steel channel studs. Wood studs to consist of nom 2 in. (51 mm) by 4 in. (102 mm) lumber spaced 16 in. (406 mm) OC. Steel studs to be min 2-1/2 in. (64 mm) wide and spaced max 24 in. (610 mm) OC. Additional framing member shall be installed in stud cavity containing through-penetrating item to form a rectangular box around penetrant.
   B. Gypsum Board* — 5/8 in. (16 mm) thick, 4 ft (1219 cm) wide with square or tapered edges. The gypsum board type, thickness, number of layers, fastener type and sheet orientation shall be as specified in the individual U300, U400, V400 or W400 Series Design in the UL Fire Resistance Directory. Max size of opening 9 in. (229 mm) by 30 in. (762 mm).
   The hourly F and FH Ratings of the firestop system are equal to the hourly fire rating of the wall assembly in which it is installed.
   Min finished wall thickness is 5 in. (127 mm).
2. Cable Tray* — Max 24 in. (610 mm) wide by max 6 in. (152 mm) deep open-ladder or solid-back cable tray with channel-shaped side rails formed of 0.10 in. (2.54 mm) thick aluminum or 0.060 in. (1.54 mm) thick steel and with 1-1/2 in. (38 mm) wide by 1 in. (25 mm) channel shape rungs spaced 9 in. (229 mm) OC or a 0.029 in. (0.74 mm) thick steel solid back, respectively. The annular space between the cable tray and the periphery of the opening shall be min 0 in. (point contact) to max 4 in. (102 mm). Cable tray to be rigidly supported on both sides of floor or wall assembly.
3. Cables — Aggregate cross-sectional area of cables in cable tray to be max 45 percent of the cross-sectional area of the cable tray based on a max 5 in. (127 mm) cable loading depth. Any combination of the following types and sizes of copper conductor cables may be used:
   A. 1/C, 750 kcmil (or smaller) power cable with EPR insulation and PVC jacket.
   B. 300 pair — No. 24 AWG cable with PVC insulation and jacket
   C. Twenty-four fiberoptic cable with PVC subunit and jacket.
   D. Max three 1/C, No. 12 AWG wire, insulated with polyvinyl chloride, in a nom 3/4 in. (19 mm) Flexible Metal Conduit+.
4. Firestop System — The firestop system shall consist of the following:
   A. Fill, Void or Cavity Material* - Fire Blocks — For walls incorporating max 3-5/8 in. (92 mm) steel studs or max 2 in. (51 mm) by 4 in. (102 mm) wood studs, fire block installed with 5 in. (127 mm) dimension projecting through and centered in opening. For walls constructed of larger steel or wood studs, fire block installed with long dimension passing through and centered in opening. Blocks may or may not be cut flush with both surfaces of wall. When multiple layers of gypsum board are used, blocks may be recessed 1/2 in. (13 mm) from surface of wall. Blocks firmly packed within opening. Either one or a combination of the block types specified below may be used.
   HILTI CONSTRUCTION CHEMICALS, DIV OF HILTI INC — FS-657 Fire Block or CFS-BL Firestop Block
   B. Fill, Void or Cavity Material* - Sealant or Putty (Not shown) — Fill material to be forced into interstices of cables and between cables and cable trays to max extent possible on both surfaces of the penetration.
   HILTI CONSTRUCTION CHEMICALS, DIV OF HILTI INC — FS-ONE Sealant or CP618 Firestop Putty Stick
   (Note: L Ratings apply only when FS-One Sealant is used)

+Bearing the UL Listing Mark
*Bearing the UL Classification Mark

Hilti Firestop Systems

Reproduced by HILTI, Inc. Courtesy of Underwriters Laboratories, Inc. December 13, 2011

System No. W-L-3065

Classified by Underwriters Laboratories, Inc. to UL 1479 and CAN/ULC-S115

F Ratings — 1 and 2 Hr (See Item 1)
T Rating — 0 and ¾ Hr (See item 3)

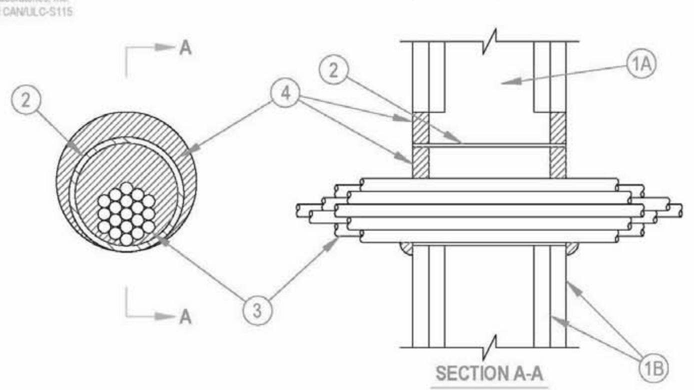

1. Wall Assembly — The 1 or 2 fire-rated gypsum wallboard/stud wall assembly shall be constructed of the materials and in the manner specified in the individual U300, U400 or V400 Series Wall and Partition Designs in the UL Fire Resistance Directory and shall include the following construction features:
   A. Studs — Wall framing may consist of either wood studs or steel channel studs. Wood studs to consist of nom 2 by 4 in. (51 by 102 mm) lumber spaced 16 in. (406 mm) OC. Steel studs to be min 2-1/2 in. (64 mm) wide and spaced max 24 in. (610 mm) OC.
   B. Gypsum Board* — Nom 5/8 in. (16 mm) thick gypsum board, with square or tapered edges. The gypsum board type, thickness, number of layers, fastener type and sheet orientation shall be as specified in the individual U300, U400 or V400 Series Design in the UL Fire Resistance Directory. Max diam of opening is 5-1/2 in. (138 mm) when sleeve (Item 2) is employed. Max diam of opening is 4 in. (102 mm) when sleeve (Item 2) is not employed.
   The F Rating of the firestop system is equal to the fire rating of the wall assembly.
2. Metallic Sleeve — (Optional) - Nom 4 in. (102 mm) diam (or smaller) steel electrical metallic tubing (EMT) or Schedule 5 (or heavier) steel pipe or min 0.016 in. thick (0.41 mm, No. 28 ga) galv steel sleeve installed flush with wall surfaces. The annular space between steel sleeve and periphery of opening shall be min 0 in. (0 mm, point contact) to max 1 in. (25mm). When Schedule 5 steel pipe or EMT is used, sleeve may extend up to 18 in. (457 mm) beyond the wall surfaces. As an option when Schedule 5 steel pipe or EMT is used, sleeve may extend continuously beyond one wall surfaces. When cable bundle penetrates wall assembly at an angle of 45 degrees, no metallic sleeve is used.
3. Cables — Aggregate cross-sectional area of cable in opening to be max 45 percent of the cross-sectional area of the opening. The annular space between the cable bundle and the periphery of the opening to be min 0 in. (0 mm, point contact) to max 1 in. (25 mm) Cables to be rigidly supported on both sides of the wall assembly. Cable bundle, using cables described below, may penetrate the wall at an angle not greater than 45 degrees. Any combination of the following types and sizes of copper conductor cables may be used:
   A. Max 7/C No. 12 AWG with polyvinyl chloride (PVC) insulation and jacket.
   B. Max 25 pair No. 24 AWG telephone cable with PVC insulation and jacket.
   B1. Max 4 pr No. 22 AWG Cat 5 or Cat 6 computer cables.
   C. Type RG/U coaxial cable with polyethylene (PE) insulation and PVC jacket having a max outside diameter of ½ in. (13 mm).
   C1. Max RG 6/U coaxial cable with fluorinated ethylene insulation and jacketing.
   D. Multiple fiber optical communication cable jacketed with PVC and having a max OD of 5/8 in. (16 mm).
   E. Through Penetrating Products*— Max three copper conductor No. 8 AWG .Metal-Clad Cable+.
   AFC CABLE SYSTEMS INC
   F. Max 3/C (with ground)(or smaller) No. 8 AWG copper conductor cable with PVC insulation and jacketing.
   G. Max 3/4 in. (19 mm) diam copper ground cable with or without a PVC jacket.
   H. Fire Resistive Cables* - Max 1-1/4 in. (32 mm) diam single conductor or multi conductor Type MI cable. A min 1/8 in. (3 mm) separation shall be maintained between MI cables and any other types of cable.
   I. Max 4/C with ground 300 kcmil (or smaller) aluminum SER cable with PVC insulation and jacket.
   J. Through Penetrating Product* - Any cables, Metal-Clad Cable+ or Armored Cable+ currently Classified under the Through Penetrating Products category.
   K. Maximum 3/C No. 8 AWG metal-clad cable.
   L. Maximum 5/8 diam fiber-optic cable with PVC jacket.
   For cable bundle penetrating the wall assembly at an angle of 45 degrees, the T rating is ¾ hr for a 2 hr wall assembly.
   See Through Penetrating Product (XHLY) category in the Fire Resistance Directory for names of manufacturers.
4. Fill, Void or Cavity Material*— Sealant or Putty — Fill material applied within the annulus, flush with each end of the steel sleeve or wall surface. Fill material installed symmetrically on both sides of the wall. A min 5/8 in. (16 mm) thickness of sealant is required for the 1 or 2 hr F Rating . An additional 1/2 in. (13 mm) diam bead of fill material shall be applied around the perimeter of sleeve on both sides of the wall when sleeve extends beyond surface of wall.
   HILTI CONSTRUCTION CHEMICALS, DIV OF HILTI INC — CP601S, CP606, FS-One Sealants or CP618 Putty

*Bearing the UL Classification Mark
+Bearing the UL Listing Mark

Reproduced by HILTI, Inc. Courtesy of Underwriters Laboratories, Inc.

System No. W-L-7154

Classified by Underwriters Laboratories, Inc. to UL 1479 and CAN/ULC-S115

F Ratings - 1 and 2 Hr (See Item 1 and 2)
T Rating - 0 Hr

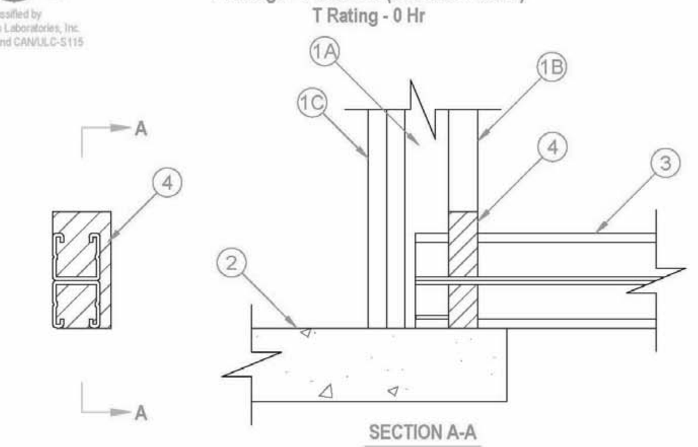

1. Wall Assembly — The 1 or 2 hr fire rated shaft wall assembly shall be constructed of the materials and in the manner specified in the individual U400 or V400 Series Wall and Partition Designs in the UL Fire Resistance Directory and shall include the following construction features:
   A. Steel Studs — C-H -shaped studs, 2-1/2 in. (64 mm) wide by 1-1/2 in. (38 mm) deep, spaced 24 in. (610 mm) OC.
   B. Gypsum Board* — 1 in. (25 mm) thick gypsum board liner panels, supplied in nom 24 in. (610 mm) widths as specified in the individual Wall and Partition Design. Max area of opening is 8.6 sq in. (55 sq cm) with a max dimension of 6-7/8 in. (175 mm). The opening cutout shall follow the contour of the penetrant when steel angle or steel channel is used.
   C. Gypsum Board* — One or two layers of 5/8 in. (16 mm) thick gypsum board for 1 or 2 hr rated assemblies, respectively, as specified in the individual Wall and Partition Design.

1A. Alternate Wall Assembly — (Not shown) As an alternate to the shaft wall described above, the 1 or 2 hr fire rated wall assembly shall be constructed of the materials and in the manner specified in the individual U400 or V400 Series Wall and Partition Designs in the UL Fire Resistance Directory and shall include the following construction features:
   A. Studs — Wall framing shall consist of min 2-1/2 in. (64 mm) steel channel studs spaced max 24 in. (610 mm) OC.
   B. Gypsum Board* — Thickness, type, number of layers and fasteners as required in the individual Wall and Partition Design. Max area of opening is 8.6 sq in. (55 sq cm) with a max dimension of 6-7/8 in. (175 mm). The opening cutout shall follow the contour of the penetrant when steel angle or steel channel is used.
   The hourly F Rating of the firestop system is equal to the hourly rating of the wall.

2. Floor Assembly — Min 2-1/2 and 4-1/2 in. (64 or 114 mm) thick reinforced lightweight or normal weight (100-150 pcf or 1600-2400 kg/m3) concrete for 1 and 2 hr rated assemblies, respectively. Floor may also be constructed of any min 6 in. (152 mm) UL Classified Precast Concrete Units*.
   See Precast Concrete Units (CFTV) category in the Fire Resistance Directory for names of manufacturers.
3. Penetrants — One metallic strut, steel angle or steel channel to be installed within the firestop system. An annular space of min 0 in. (point contact) to max 7/8 in. (22 mm) is required within the firestop system. Penetrant to terminate within the stud cavity and shall be secured to floor assembly within 2 in. (51 mm) of the fill material (Item 4) on either side of the fill material with at least one min 1/4 in. (6 mm) diam by min 1-1/4 in. (32 mm) long steel masonry anchor in conjunction with steel washers or Hilti 1/4 in. diam by 1-3/4 in. long KWIK-BOLT 3 steel expansion anchor. The following types and sizes of metallic struts, angles or channels may be used:
   A. Steel Strut — Max 1-5/8 by 1-5/8 in. (41 by 41 mm) channel strut formed from min 0.105 in. (2.7 mm) thick galv or painted steel.
   B. Steel Strut — Max 3-1/4 by 1-5/8 in. (83 by 41 mm) H strut formed from min 0.105 in. (2.7 mm) thick galv or painted steel.
   C. Steel Angle — Max 2 by 2 in. (51 by 51 mm) by min 1/8 in. (3.2 mm) thick or max 3 by 3 in. (76 by 76 mm) by min 1/4 in. (6 mm) thick steel angle.
   D. Steel Channel — C6 x 8.2 (or smaller) steel channel.
4. Fill, Void or Cavity Material* - Sealant — Fill material to be installed to completely fill the annular space, flush with the surface of the wall. The thickness of the fill material shall be the thickness of the gypsum board(s) in which it is installed. An additional min 1/2 in. (13 mm) diam bead of sealant to be installed at the point contact location at the penetrant/gypsum board interface.
   HILTI CONSTRUCTION CHEMICALS, DIV OF HILTI INC — FS-ONE Sealant

*Bearing the UL Classification Mark

Hilti Firestop Systems

Reproduced by HILTI, Inc. Courtesy of Underwriters Laboratories, Inc. January 29, 2007

System No. C-AJ-3285

Classified by Underwriters Laboratories, Inc. to UL 1479 and CAN/ULC-S115

ANSI/UL1479 (ASTM E814)	CAN/ULC S115
F Rating — 3 Hr	F Rating — 3 Hr
T Ratings — 1, 1-1/2 and 3 Hr (See Item 2)	FT Ratings — 1, 1-1/2 and 3 Hr (See Item 2)
L Rating At Ambient — Less Than 1 CFM (See Items 2 and 4)	FH Rating — 3 Hr
L Rating At 400 F — Less Than 1 CFM (See Items 2 and 4)	FTH Ratings — 1, 1-1/2 and 3 Hr (See Item 2)
	L Rating At Ambient — Less Than 1 CFM (See Items 2 and 4)
	L Rating At 400 F — Less Than 1 CFM (See Items 2 and 4)

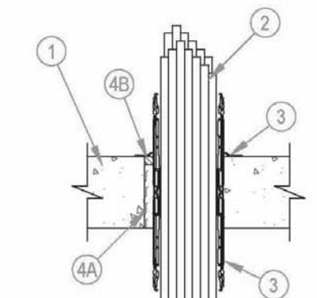

1. Floor or Wall Assembly — Reinforced lightweight or normal weight (100-150 pcf or 1600-2400 kg/m³) concrete. Min 4-1/2 in. (114 mm) thick floors and min 5 in. (127 mm) thick walls. Wall may also be constructed of any UL Classified Concrete Blocks*. Floor may also be constructed of any min 6 in. (152 mm) thick UL Classified hollow-core Precast Concrete Units*. Opening in floor or wall to be max 3 in. (76 mm) diam for 2 in. (51 mm) device and max 5 in. (127 mm) diam for 4 in. (102 mm) device.
   See Concrete Blocks (CAZT) and Precast Concrete Units (CFTV) categories in the Fire Resistance Directory for names of manufacturers.
2. Cables — Within the loading area for each firestop device, the cables may represent a 0 to 100 percent visual fill. Cables to be tightly bundled within the device and rigidly supported on both sides of floor or wall assembly. Any combination of the following types of cables may be used:
   A. Max 100 pair No. 24 AWG (or smaller) copper conductor telecommunication cable with polyvinyl chloride (PVC) jacketing and insulation.
   B. Max 7/C No. 12 AWG copper conductor control cable with PVC or XLPE jacket and insulation.
   C. Max 4/0 AWG Type RHH ground cable.
   D. Max four pair No. 22 AWG Cat 6 computer cables.
   E. Max RG 6/U coaxial cable with fluorinated ethylene insulation and jacketing.
   F. Fiber optic cable with polyvinyl chloride (PVC) or polyethylene (PE) jacket and insulation having a max diam of 1/2 in. (13 mm).
   G. Max 20/C No. 22 AWG shielded printer cable with PVC jacket.
   H. Through-Penetrating Product* - Two copper conductors No. 18 AWG (or smaller) Power or Non Power Limited Fire Alarm Cable with or without a jacket under a metal armor.
   AFC CABLE SYSTEMS INC
   I. Max. 1/4 in. (6 mm) diam S-Video Cable consisting of two max No. 24 AWG 75 ohm coax or twisted pair cable with PE insulation and PVC jacket.
   The hourly T, FT and FTH Ratings for blank opening (no cables) are 3 hr. The hourly T, FT and FTH Ratings for opening with cables are 1-1/2 hr except that, when cable type 2A, 2B, 2C, 2E or 2H is used, the T, FT and FTH Ratings are 1 hr. See Table below for L Ratings.

Max Cable Fill	Cable Type	L Rating, CFM/Sq Ft		L Rating, CFM	
		Ambient	400°F	Ambient	400°F
0%	—	1	2	Less than 1	Less than 1
100%	Any cables (Item 2) in any combination	7	7	Less than 1	Less than 1

3. Firestop Device* — Firestop device consists of a corrugated steel tube with an inner plastic housing, intumescent material rings and tightly twisted inner fabric smoke seal. Firestop device to be installed in accordance with the accompanying installation instructions. Device slid into floor or wall such that ends project an equal distance from the approximate centerline of the assembly. As an option, in floors, steel sleeve of device may be installed flush with bottom of floor. The annular space between the device and the periphery of the opening shall be min 0 in. (point contact). Device provided with flange(s) that are spun clockwise onto device threads, butting tightly to top side of floor or both sides of floor or wall. In floors, when one device flange is used, device flange to be secured to floor with min two 1-1/4 in. (32 mm) long masonry screws or anchors.
   HILTI CONSTRUCTION CHEMICALS, DIV OF HILTI INC — CP 653 2" Speed Sleeve and CP 653 4" Speed Sleeve
4. Firestop System — The firestop system shall consist of the following:
   A. Packing Material — Min 4 in. (102 mm) thickness of min 4 pcf (64 kg/m³) mineral wool batt insulation firmly packed into annular space between firestop device and opening as a permanent form. Packing material to be installed flush with bottom of floor and recessed from top surface of floor or from both surfaces of wall to accommodate the required thickness of fill material.
   B. Fill, Void or Cavity Material* — Sealant — Min 1/2 in. (13 mm) thickness of fill material applied within the annulus, flush with top surface of floor or with both surfaces of wall. For L Ratings, an additional 1/4 in. (6 mm) bead of fill material is required at the device/floor or device/wall interface on top side of floor or both sides of wall assembly prior to installing flange(s).
   HILTI CONSTRUCTION CHEMICALS, DIV OF HILTI INC — CP601S Sealant, CP604 Sealant, CP 606 Sealant or FS-ONE Sealant

*Bearing the UL Classification Mark

Hilti Firestop Systems

Reproduced by HILTI, Inc. Courtesy of Underwriters Laboratories, Inc. March 14, 2012

System No. W-L-3334

Classified by Underwriters Laboratories, Inc. to UL 1479 and CAN/ULC-S115

ANSI/UL1479 (ASTM E814)	CAN/ULC S115
F Ratings - 1, 2, 3 and 4 Hr (See Item 1)	F Ratings - 1, 2, 3 and 4 Hr (See Item 1)
T Ratings - 0, 1, 1-3/4, 2, 3 and 4 Hr (See Items 2 and 3)	FT Ratings - 0, 1, 1-3/4, 2, 3 and 4 Hr (See Items 2 and 3)
L Rating At Ambient - Less Than 1 CFM (See Item 2)	FH Ratings - 1, 2, 3 and 4 Hr (See Item 1)
L Ratings At 400 F - 1 and Less Than 1 CFM (See Item 2)	FTH Ratings - 0, 1, 1-3/4, 2, 3 and 4 Hr (See Items 2 and 3)
	L Rating At Ambient - Less Than 1 CFM (See Item 2)
	L Ratings At 400 F - 1 and Less Than 1 CFM (See Item 2)

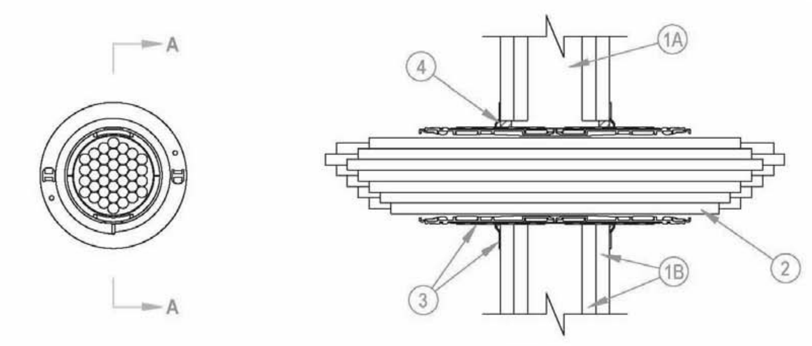

1. Wall Assembly — The 1, 2, 3 or 4 hr fire rated gypsum board/stud wall assembly shall be constructed of the materials and in the manner described within the individual U300, U400, V400 or W400 Series Wall and Partition Designs in the UL Fire Resistance Directory and shall incorporate the following construction features:
   A. Studs — Wall framing shall consist of either wood studs or steel channel studs. Wood studs to consist of nom 2 by 4 in. (51 by 102 mm) lumber spaced max 16 in. (406 mm) OC. Steel studs to be min 2-1/2 in. (64 mm) wide and spaced max 24 in. (610 mm) OC for 1 and 2 hr wall assemblies. Steel Studs to be 3-5/8 in. (92 mm) for 3 and 4 hr wall assemblies.
   B. Gypsum Board* — Nom 5/8 in. (16 mm) thick gypsum board as specified in the individual Wall and Partition Design. Opening in gypsum board to be max 2-1/2 in. (64 mm) diam for 2" device and max 4-1/2 in. (114 mm) diam for 4" device.
   The hourly F and FH Ratings of the firestop system are dependent upon the hourly rating of the wall in which it installed.
2. Cables — Within the loading area for each firestop device, the cables may represent a 0 to 100 percent visual fill. Cables to be tightly bundled within the device and rigidly supported on both sides of wall assembly. Any combinatic of the following types of cables may be used:
   A. Max 100 pair No. 24 AWG (or smaller) copper conductor telecommunication cable with polyvinyl chloride (PVC jacketing and insulation.
   B. Max 7/C No. 12 AWG copper conductor control cable with PVC or XLPE jacket and insulation.
   C. Max 4/0 AWG Type RHH ground cable.
   D. Max 4 pr No. 22 AWG Cat 5 or Cat 6 computer cables.
   E. Max RG 6/U coaxial cable with fluorinated ethylene insulation and jacketing.
   F. Fiber optic cable with polyvinyl chloride (PVC) or polyethylene (PE) jacket and insulation having a max diam of 1/2 in. (13 mm).
   G. Max 20/C No. 22 AWG shielded printer cable with PVC jacket.
   H. Through-Penetrating Product* - Two copper conductors No. 18 AWG (or smaller) Power or Non Power Limitec Fire Alarm Cable with or without a jacket under a metal armor.
   AFC CABLE SYSTEMS INC
   I. Max. 1/4 in. (6 mm) diameter S-Video Cable consisting of 2 max 24 AWG 75 ohm coax or twisted pair cable wit PE insulation and PVC jacket .
   J. Max 3/C No 12 AWG MC Cable.
   K. Through Penetrating Product* — Any cables, Armored Cable+ or Metal Clad Cable+ currently Classified unde the Through Penetrating Product category. See Through Penetrating Product (XHLY) category in the Fire Resistance Directory for names of manufacturers.

For opening with cables, when the hourly rating of the wall assembly is 1 hr, the T, FT and FTH Ratings are 0 hr. Fo opening with cables, when the hourly rating of the wall assembly is 2 hr, the T, FT and FTH Ratings are 1-3/4 hr except that, when Item 2C, 2G, 2I, 2J or 2K is used, the T, FT and FTH Ratings are 1 hr for 2C, 2 OR 2I and the T, F and FTH Ratings are 1/2 hr for 2J or 2 K (see Item 3 also). When the hourly rating of the wall assembly is 3 or 4 hr, the T, FT and FTH Ratings are 2 hr. For wall assemblies with a 3 or 4 hr rating, Items 2G and 2I are not to be used.

L Ratings apply only when device flanges and CP 606 or FS-One Sealant are used. See Table below for L Ratings.

Max Cable Fill	Cable Type	L Rating, CFM/Sq Ft		L Rating, CFM	
		Ambient	400°F	Ambient	400°F
0%	-	Less Than 1	Less Than 1	Less Than 1	Less Than 1
100%	Item 2D only	5	1	Less Than 1	Less Than 1
100%	Any cables (Item 2) in any combination	9	10	Less Than 1	1

3. Firestop Device* — Firestop device consists of a corrugated steel tube with an inner plastic housing, intumescent material rings and twisted inner fabric smoke seal. Firestop device to be installed in accordance with the accompanying installation instructions. As an option, the inner fabric seal may remain open except that, to attain th L Rating, the inner fabric seal shall be twisted to completely close off the opening within device. Device slid into wa such that ends project an equal distance from the approximate centerline of the wall assembly. The annular space between the device and the periphery of the opening shall be min 0 in. (point contact). Device provided with flange that are spun clockwise onto device threads, butting tightly to both sides of wall. Device flanges are optional. Wher the device flanges are not used, the T, FT and FTH Ratings for the firestop system are 0 hr. For blank opening (no cables), the T, FT and FTH Ratings for the firestop system equal the F and FH Ratings only when the device flang are used.
   HILTI CONSTRUCTION CHEMICALS, DIV OF HILTI INC — CP 653 2" Speed Sleeve and CP 653 4" Speed Sleeve
4. Fill, Void or Cavity Material* - Sealant — Min 1/2 in. (13 mm) thickness of fill material applied within the annulus between firestop device and wall, flush with both surfaces of wall, and an additional 1/4 in. (6 mm) bead applied around periphery of device. When device flanges are used, gypsum drywall compound may be used in place of the fill material.
   HILTI CONSTRUCTION CHEMICALS, DIV OF HILTI INC — FS-ONE or CP 606 Sealant

*Bearing the UL Classification Mark

Hilti Firestop Systems

Reproduced by HILTI, Inc. Courtesy of Underwriters Laboratories, Inc. March 14, 2012

CRSA
649 E. South Temple
Salt Lake City, UT 84102
801.355.5915

MWL
11798 N. Lakeridge Pkwy.
Ashland, VA 23005
804-228-7473

State of Utah
Department of Administrative Services
Division of Facilities Construction & Management
DFCM
4110 State Office Building
Salt Lake City, Utah 84114
Phone: (801) 538 - 3018
Fax: (801) 538 - 3267

DIVISION OF FACILITIES CONSTRUCTION AND MANAGEMENT
REVIEWED FOR CODE COMPLIANCE
SIGNATURE: Enzo Calfa
DATE: 08-05-2014

STATE OF UTAH
#134098
MEHRDAD SAMIE
LICENSED ARCHITECT
04.28.2014
ARCHITECT-ENGINEER STAMP

Unified State Laboratory Module 2
4451 South 2700 West, Taylorsville, UT 84118

DFCM #:	13020300
Project #:	B13-024
DATE:	ISSUE TYPE:
APRIL 21, 2014	BID SET
CHECKED BY	J. NIELSEN
DRAWN BY	F. PITORE

UL DETAILS

GF013

VOLUME 1

C:\Users\fernando\Documents_A_13024_ModII_2013_fernando.rvt
7/14/2014 1:12:35 PM

System No. F-A-5015

F Rating — 2 Hr
T Ratings — 1/2 and 3/4 Hr (See Item 3)

CLASSIFIED UL C US
Classified by Underwriters Laboratories, Inc. to UL 1479 and CAN/ULC-S115

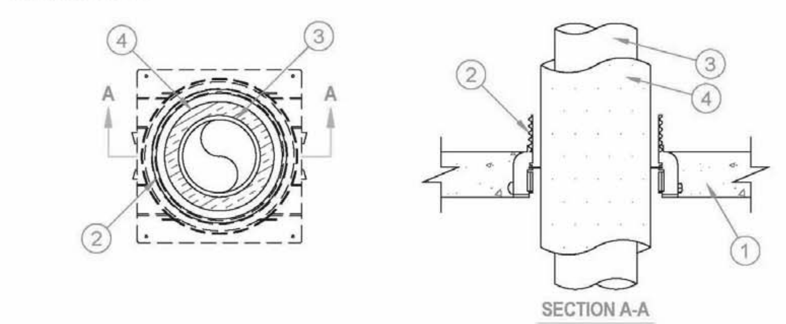

1. Floor Assembly — Min 2-1/2 in. (64 mm) thick reinforced lightweight or normal weight (100-150 pcf or 1600-2400 kg/m3) concrete.
1A. Floor Assembly - (Optional - Not Shown) — The fire rated unprotected concrete and steel floor assembly shall be constructed of the materials and in the manner specified in the individual D900 Series Designs in the Fire Resistance Directory and as summarized below:
  A. Steel Floor and Form Units* — Composite or non-composite max 3 in. (76 mm) deep galv steel fluted units as specified in the individual Floor-Ceiling Design.
  B. Concrete — Min 2-1/2 in. (64 mm) thick reinforced lightweight or normal weight (100-150 pcf or 1600-2400 kg/m3) concrete.
2. Firestop Device* — Cast in place firestop device permanently embedded during concrete placement or grouted in concrete floor assembly in accordance with accompanying installation instructions with a max 2 in. (51 mm) projection above the top surface of the concrete.
HILTI CONSTRUCTION CHEMICALS, DIV OF HILTI INC — CP 680-75/2.5"N, CP 680-110/4"N, CP 680-160/6"N, CP 682-75/2.5", CP 682-110/4", CP 680-M 2", CP 680-M 3", CP 680-M 4", CP 680-P 2", CP 680-P 3", CP 680-P 4", CP 680-P 6"
3. Through Penetrants — One metallic pipe, conduit or tubing to be installed within the firestop device. Pipe, conduit or tubing to be rigidly supported on both sides of floor assembly. The following types of pipe, conduit or tubing may be used:
  A. Steel Pipe — Nom 4 in. (102 mm) diam (or smaller) Schedule 10 (or heavier) steel pipe.
  B. Copper Tubing — Nom 4 in. (102 mm) diam (or smaller) Type L (or heavier) copper tubing.
  C. Copper Pipe — Nom 4 in. (102 mm) diam (or smaller) Regular (or heavier) copper pipe.
  The firestop device and metallic penetrant shall be sized as follows:

Nom Pipe Diam, in. (mm)	Nom Thick. Of Pipe Insul., in. (mm)	Firestop Device	T-Rating, Hr
1/2 (13)	1 (25)	CP 680-75/2.5"N, CP 682-72/2.5"CP 680-M 2", CP 680-P 2"	3/4
1 (25)	3/4 (19)	CP 680-75/2.5"N CP 680-P 3"	1/2
1 (25)	1 (25)	CP 680-M 3", CP 680-P 3"	1/2
1 (25) (see Item 5)	1 (25)	CP 682-110/4"CP 680-M 4"	1/2
2 (51)	1 (25)	CP 680 110/4"N, CP682 110/4"CP 680-M 4", CP 680-P 4"	1/2
2 (51)	3/4 (19)	CP 680-100/4"NCP 680-P 4"	1/2
4 (102)	3/4 (19)	CP 680-160/6"NCP 680-P 6	1/2

4. Tube Insulation - Plastics+ — Nom ¾ or 1 in. (19 or 25 mm) thick acryonitrile butadiene/polyvinyl chloride (AB/PVC) flexible foam furnished in the form of tubing.
  See Plastics+ (QMFZ2) Category in the Plastics Recognized Component Directory for names of manufacturers. Any Recognized Component tube insulation material meeting the above specifications and having a UL94 Flammability Classification of 94-5VA may be used.
5. Packing Material — (Not Shown) - When using a 1 in. (25 mm) diam pipe with 1 in. (25 mm) thick AB/PVC pipe insulation in a 4 in. (102 mm) device, and a min 2 in. (51 mm) thickness of min 4 pcf (64 kg/m3) mineral wool batt insulation shall be firmly packed into top of devices, flush with the top of the device.
*Bearing the UL Classification Mark

HILTI
Hilti Firestop Systems

Reproduced by HILTI, Inc. Courtesy of Underwriters Laboratories, Inc.
December 14, 2006

System No. F-A-5016

F Rating — 3 Hr
T Ratings — 0, 3/4, 1, 3 Hr (See Item 3)

CLASSIFIED UL C US
Classified by Underwriters Laboratories, Inc. to UL 1479 and CAN/ULC-S115

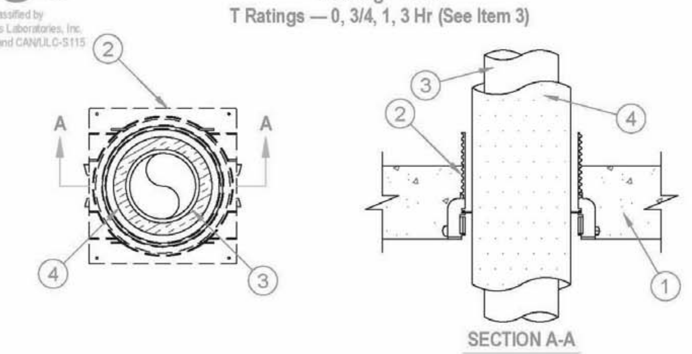

1. Floor Assembly — Min 4-1/2 in. (114 mm) thick reinforced lightweight or normal weight (100-150 pcf or 1600-2400 kg/m3) concrete.
1A. Floor Assembly - (Optional - Not Shown) — The fire rated unprotected concrete and steel floor assembly shall be constructed of the materials and in the manner specified in the individual D900 Series designs in the UL Fire Resistance Directory and as summarized below:
  A. Concrete — Min 4-1/2 in. (114 mm) thick reinforced lightweight or normal weight (100-150 pcf or 1600-2400 kg/m3) concrete.
  B. Steel Floor and Form Units* — Composite or non-composite max 3 in. (76 mm) deep galv steel fluted units as specified in the individual Floor-Ceiling Design.
2. Firestop Device* — Cast in place firestop device permanently embedded during concrete placement or grouted in concrete floor assembly in accordance with accompanying installation instructions with a max 2 in. (51 mm) projection above the top surface of the concrete.
HILTI CONSTRUCTION CHEMICALS, DIV OF HILTI INC — CP 680-110/4" N , CP 680-160/6" N, CP 682-75/2.5", CP 682-110/4", CP 680-M 2", CP 680-M 3", CP 680-M 4", CP 680-P 2", CP 680-P 3", CP 680-P 4", CP 680-P 6"
3. Through Penetrants — One metallic pipe or tubing to be installed within the firestop device. Pipe or tubing to be rigidly supported on both sides of floor assembly. The following types of pipe or tubing may be used:
  Steel Pipe — Nom 4 in. (102 mm) diam (or smaller) Schedule 10 (or heavier) steel pipe.
  Copper Tubing — Nom 4 in. (102 mm) diam (or smaller) Type L (or heavier) copper tubing.
  Copper Pipe — Nom 4 in. (102 mm) diam (or smaller) Regular (or heavier) copper pipe.
  The firestop device and metallic penetrant shall be sized as follows:

Nom Pipe Diameter*	Nom Pipe Cover-in. (mm)	Firestop	T Rating-Hr
1/2 in. (13 mm)	1 (25)	CP 680-75/2.5"N, CP 682-75/2.5"	3
		CP 680-M 2", CP 680-P 2"	
1 in. (25 mm)	1 (25)	CP 680-110/4"N, CP 682-110/4"	3/4
		CP 680-M 3", CP 680-P 3", CP 680-M 4", CP 680-P 4"	
2 in. (51 mm)	3/4 (19)	CP 680-110/4"N	1
		CP 680-P 4"	
4 in. (102 mm)	3/4 (19)	CP 680-160/6"N	3/4
		CP 680-P 6"	

* - When pipe diameter smaller than shown in above table is used, the insulated pipe shall be installed in conjunction with Item 5 and the T Ratings are 0 hr.
4. Tube Insulation - Plastic+ — Nom 3/4 or 1 in. (19 or 25 mm) thick acryonitrile butadiene/polyvinyl chloride (AB/PVC) flexible foam furnished in the form of tubing.
  See Plastics+ (QMFZ2) Category in the Recognized Component Directory for names of manufacturers. Any Recognized Component tube insulation material meeting the above specifications and having a UL94 Flammability Classification of 94-5VA may be used.
5. Packing Material — (Not Shown) When pipe sizes are less than those shown in the table in Item 3, min 4 in. (102 mm) thickness of min 4 pcf (64 kg/m3) mineral wool insulation shall be firmly packed to the fullest extent possible within the device flush with top surface of device.
*Bearing the UL Classification Mark

HILTI
Hilti Firestop Systems

Reproduced by HILTI, Inc. Courtesy of Underwriters Laboratories, Inc.
December 14, 2006

System No. F-A-5017

F Rating — 2 Hr
T Ratings — 3/4 and 1 Hr (See Item 3)

CLASSIFIED UL C US
Classified by Underwriters Laboratories, Inc. to UL 1479 and CAN/ULC-S115

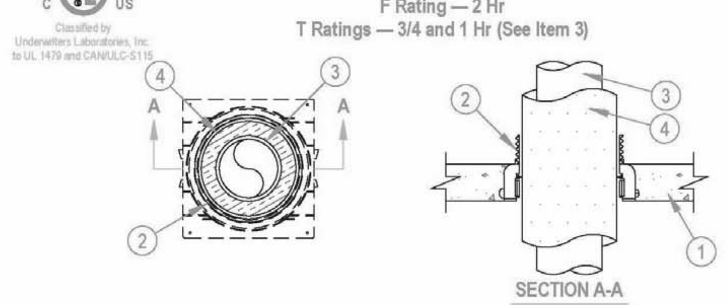

1. Floor Assembly — Min 2-1/2 in. (38 mm) thick reinforced lightweight or normal weight (100-150 pcf or 1600-2400 kg/m3) concrete.
1A. Floor Assembly - (Optional - Not Shown) — The fire rated unprotected concrete and steel floor assembly shall be constructed of the materials and in the manner specified in the individual D900 Series Designs in the Fire Resistance Directory and as summarized below:
  A. Concrete — Min 2-1/2 in. (38 mm) thick reinforced lightweight or normal weight (100-150 pcf or 1600-2400 kg/m3) concrete.
  B. Steel Floor and Form Units* — Composite or non-composite max 3 in. (76 mm) deep galv steel fluted units as specified in the individual Floor-Ceiling Design.
2. Firestop Device* — Cast in place firestop device permanently embedded during concrete placement or grouted in concrete floor assembly in accordance with accompanying installation instructions with a max 2 in. (51 mm) projection above the top surface of the concrete.
HILTI CONSTRUCTION CHEMICALS, DIV OF HILTI INC — CP 680-75/2.5"N, CP 680-110/4"N, CP 680-160/6"N, CP 682-75/2.5", CP 682-110/4", CP 680-M 2", CP 680-M 3", CP 680-M 4", CP 680-P 2", CP 680-P 3", CP 680-P 4", CP 680-P 6"
3. Through Penetrants — One metallic pipe or tubing to be installed within the firestop device. Pipe or tubing to be rigidly supported on both sides of floor assembly. The following types of pipe or tubing may be used:
  A. Steel Pipe — Nom 4 in. (102 mm) diam (or smaller) Schedule 10 (or heavier) steel pipe.
  B. Copper Tubing — Nom 4 in. (102 mm) diam (or smaller) Type L (or heavier) copper tubing.
  C. Copper Pipe — Nom 4 in. (102 mm) diam (or smaller) Regular (or heavier) copper pipe.
The firestop device, metallic penetrant and pipe covering shall be sized as follows:

Nom Pipe Diam, in. (mm)	Nom Pipe Covering Thickness, in. (mm)	Firestop Device	T Rating, Hr
1/2 (13)	1 (25)	CP 680-75/2.5"N, CP 682-75/2.5" CP 680-M 2", CP 680-P 2"	3/4
1 (25)	1 (25)	CP 680-M 3", CP 680-P 3"	3/4
1 (25) (See Item 5)	1-1/2 (38)	CP 682-110/4" CP 680-M 4", CP 680-P 4"	3/4
2 (51)	1 (25)	CP 680-110/4"N, CP 682-110/4" CP 680-M 4", CP 680-P 4"	1
2 (51)	2 (51)	CP 680-160/6"N CP 680-P 6"	3/4
4 (102)	1 (25)	CP 680-160/6"N CP 680-P 6"	3/4

4. Pipe Covering* — Nom 1, 1-1/2 and 2 in. (25, 38 and 51 mm) thick hollow cylindrical heavy density (min 3.5 pcf or 56 kg/m3) glass fiber units, jacketed on the outside with an all service jacket. Longitudinal joints sealed with metal fasteners or factory-applied SSL tape. Transverse joints secured with metal fasteners or with butt tape supplied with the product.
  See Pipe and Equipment Covering-Materials (BRGU) category in the Building Materials Directory for names of manufacturers. Any pipe covering material meeting the above specifications and bearing the UL Classification Marking with a Flame Spread Index of 25 or less and a Smoke Developed Index of 50 or less may be used.
5. Packing Material — When using a 1 in. (25 mm) diam pipe with 1-1/2 in. (38 mm) thick glass fiber pipe insulation in a 4 in. (102 mm) device, a min 2 in. (51 mm) thickness of min 4 pcf (64 kg/m3) mineral wool batt insulation shall be firmly packed into top of device, flush with the top of the device.
*Bearing the UL Classification Mark

HILTI
Hilti Firestop Systems

Reproduced by HILTI, Inc. Courtesy of Underwriters Laboratories, Inc.
December 14, 2006

System No. F-A-2053

F Rating — 2 Hr
T Rating — 0 Hr
L Rating At Ambient — Less Than 1 CFM/sq ft (See Item 3)
L Rating At 400 F — Less Than 1 CFM/sq ft (See Item 3)
W Ratings — Class 1 (See Items 3, 4 and 4A)

CLASSIFIED UL
Classified by Underwriters Laboratories, Inc. to UL 1479

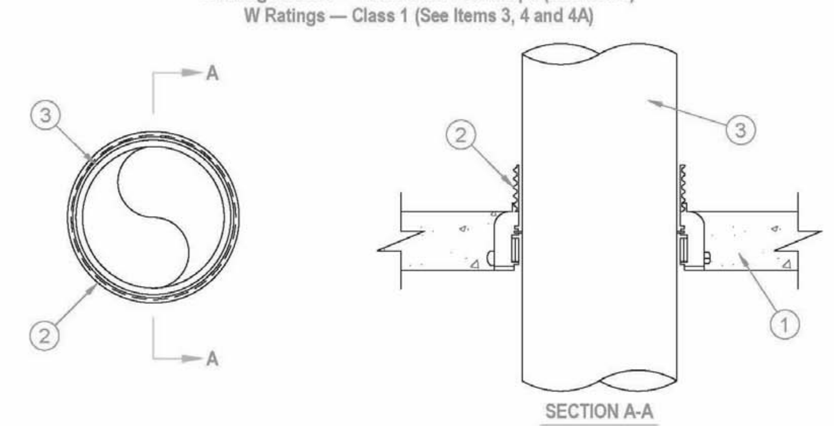

1. Floor Assembly — Min 2-1/2 in. (64 mm) thick reinforced lightweight or normal weight (100-150 pcf or 1600-2400 kg/m3) concrete.
1A. Floor Assembly - (Optional - Not Shown) — The fire rated unprotected concrete and steel floor assembly shall be constructed of the materials and in the manner specified in the individual D900 Series designs in the UL Fire Resistance Directory and as summarized below:
  A. Concrete — Min 2-1/2 in (64 mm) thick reinforced lightweight or normal weight (100-150 pcf or 1600-2400 kg/m3) concrete.
  B. Steel Floor and Form Units* — Composite or non-composite max 3 in. (76 mm) deep galv steel fluted units as specified in the individual Floor-Ceiling Design.
2. Firestop Device* — Cast in place firestop device permanently embedded during concrete placement or grouted in concrete assembly in accordance with accompanying installation instructions. The 3, 4 and 6 in. devices may extend a max 2 in. (51 mm) above the top surface of the concrete. The max extension above the slab for the 2 and 2.5 in. devices is not restricted.
HILTI CONSTRUCTION CHEMICALS, DIV OF HILTI INC — CP 680-75/2.5"N, CP 680-110/4"N, CP 680-160/6"N, CP 680-P 2", CP 680-P 3", CP 680-P 4", CP 680-P 6"
3. Through Penetrants — One nonmetallic pipe or conduit to be installed within the firestop system. Pipe or conduit to be rigidly supported on both sides of floor assembly. For W Rating with Water Barrier Module, pipe shall be installed from bottom of device. The following types and sizes of nonmetallic pipes or conduits may be used:
  A. Polyvinyl Chloride (PVC) Pipe — Nom 6 in. (152 mm) diam (or smaller) Schedule 40 solid or cellular core PVC pipe for use in closed (process or supply) or vented (drain, waste or vent) piping systems.
  B. Chlorinated Polyvinyl Chloride (CPVC) Pipe — Nom 6 in. (152 mm) diam (or smaller) SDR11 or SDR13.5 CPVC pipe for use in closed (process or supply) piping systems.
  C. Rigid Nonmetallic Conduit+ — Nom 6 in. (152 mm) diam (or smaller) Schedule 40 PVC conduit installed in accordance with the National Electrical Code (NFPA No. 70).
  The firestop devices and nonmetallic penetrants shall be sized as follows:

Nom Pipe Diameter	Firestop Device
1/2 in. to 2 in. (19 mm to 51 mm)	CP 680-75/2.5"N
	CP 680-P 2"
3 in. (76 mm)	CP 680-P 3"
3 in. to 4 in. (76 mm to 102 mm)	CP 680-110/4"N
	CP 680-P 4"
6 in. (152 mm)	CP 680-160/6"N
	CP 680-P 6"

++ L Rating applies only to CP 680-P devices and only when the nom diam of pipe equals size of device (2 in. diam pipe in 2" device etc.) L Rating does not apply to CP 680N devices.
4. Firestop Device* — (Not shown) -Top seal plug for use with CP 680-75/2.5"N devices and nom pipe or conduit sizes 3/4 in. (19 mm) to 2 in. (51 mm), installed in accordance with the manufacturer\'s instructions. The top seal plug is optional for nom 1-1/2 in. (38 mm) pipes and conduits. Top seal plugs are required for all pipes and conduits less than nom 1-1/2 in. (38 mm). W Rating applies only when the CPS or IPS Top Seal Plugs are used.
HILTI CONSTRUCTION CHEMICALS, DIV OF HILTI INC — CPS and IPS Top Seal Plugs
4A. Firestop Device* - Water Barrier Module — (Optional, Not Shown) - Applies to nom 2", 3" and 4" water barrier modules used in combination with the CP 680-P 2", CP 680-P 3" and CP 680-P 4" devices, respectively, and supplied by device manufacturer. Module is threaded onto top of device. W Rating applies only when water barrier module is used.
HILTI CONSTRUCTION CHEMICALS, DIV OF HILTI INC — Water Barrier Module
*Bearing the UL Classification Mark
+Bearing the UL Listing Mark

HILTI
Hilti Firestop Systems

Reproduced by HILTI, Inc. Courtesy of Underwriters Laboratories, Inc.
February 27, 2008

System No. C-AJ-1421

F Rating - 2 and 3 Hr (See Item 4B)
T Rating = 0 Hr

CLASSIFIED UL C US
Classified by Underwriters Laboratories, Inc. to UL 1479 and CAN/ULC-S115

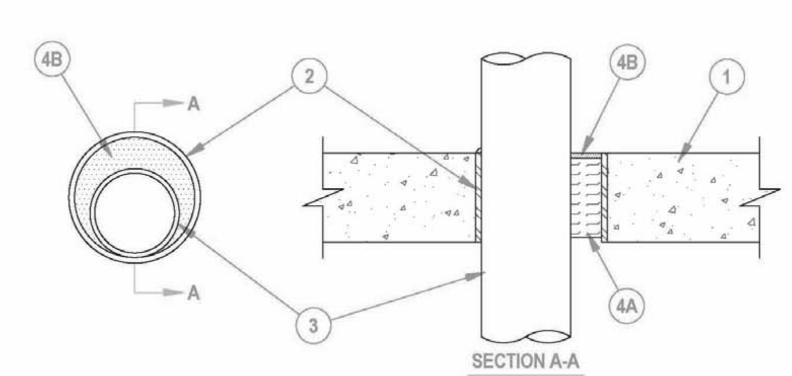

1. Floor or Wall Assembly - Min 4-1/2 in. (114 mm) thick reinforced lightweight or normal weight (100-150 pcf or 1600-2400 kg/m3) concrete. Wall may also be constructed of any UL Classified Concrete Blocks*. Max diam of opening is 6 in. (152 mm).
  See Concrete Blocks (CAZT) category in the Fire Resistance Directory for names of manufacturers.
2. Metallic Sleeve - (Optional) Nom 6 in. (152 mm) diam (or smaller) Schedule 40 (or heavier) steel sleeve cast or grouted into floor or wall assembly, flush with floor or wall surfaces.
3. Through-Penetrant - One metallic pipe or conduit to be installed either concentrically or eccentrically within the firestop system. The annular space between pipe, tube or conduit and periphery of opening shall be min 0 in. (0 mm) (point contact) to max 5-3/8 in. (137 mm). Pipe or conduit to be rigidly supported on both sides of floor or wall assembly. The following types and sizes of metallic pipes or conduits may be used:
  A. Steel Pipe - Nom 4 in. (102 mm) diam (or smaller) Schedule 10 (or heavier) steel pipe.
  B. Iron Pipe - Nom 4 in. (102 mm) diam (or smaller) cast or ductile iron pipe.
  C. Copper Pipe - Nom 4 in. (102 mm) diam (or smaller) Regular (or heavier) copper pipe.
  D. Copper Tubing - Nom 4 in. (102 mm) diam (or smaller) Type L (or heavier) copper tubing.
  E. Conduit - Nom 4 in. (102 mm) diam (or smaller) steel conduit.
  F. Conduit - Nom 4 in. (102 mm) diam (or smaller) steel electrical metallic tubing (EMT).
4. Firestop System - The firestop system shall consist of the following:
  A. Packing Material - Min 4 in. (102 mm) thickness of min 4 pcf (64 kg/m3) mineral wool batt insulation firmly packed into opening as a permanent form. Packing material to be recessed from top surface of floor or from both surfaces of wall as required to accommodate the required thickness of fill material.
  B. Fill, Void or Cavity Material* - Sealant - Min 1/4 in. (6 mm) thickness of fill material applied within the annulus, flush with top surface of floor or with both surfaces of wall. For 3 Hr rated assemblies, a min 1/4 in. (6 mm) diam bead of fill material shall be applied at the concrete/pipe interface at the point contact location on the top surface of floor and on both surfaces of wall.
  HILTI CONSTRUCTION CHEMICALS, DIV OF HILTI INC - FS-ONE Sealant or CP604 Self-Leveling Firestop Sealant. CP604 shall be used in floor applications only. When CP604 is used, F Rating is 2 Hr.
*Bearing the UL Classification Mark

HILTI
Hilti Firestop Systems

Reproduced by HILTI, Inc. Courtesy of Underwriters Laboratories, Inc.
April 26, 2004

System No. C-AJ-1226

F Rating — 3 Hr
T Rating — 0 Hr
L Rating At Ambient — Less Than 1 CFM/Sq Ft
L Rating At 400 F — 4 CFM/Sq Ft

CLASSIFIED UL C US
Classified by Underwriters Laboratories, Inc. to UL 1479 and CAN/ULC-S115

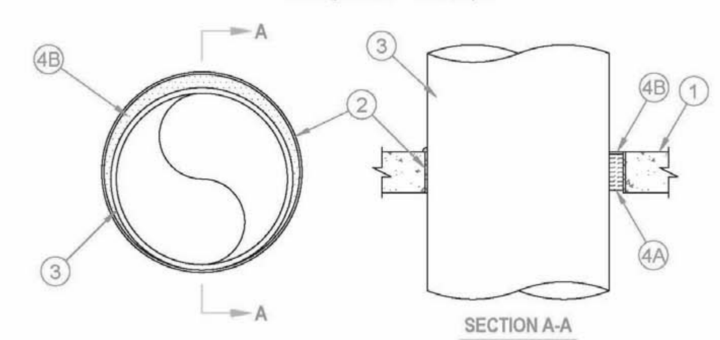

1. Floor or Wall Assembly — Min 4-1/2 in. thick reinforced lightweight or normal weight (100-150 pcf) concrete. Wall may also be constructed of any UL Classified Concrete Blocks*. Max diam of opening is 32 in.
2. Metallic Sleeve — (Optional) Nom 32 in. diam (or smaller) Schedule 40 (or heavier) steel sleeve cast or grouted into floor or wall assembly, flush with floor or wall surfaces or extending a max of 3 in. above floor or beyond both surfaces of wall.
2A. Sheet Metal Sleeve — (Optional) Max 6 in. diam, min 26 ga galv steel provided with a 26 ga galv steel square flange spot welded to the sleeve at approx mid-height, or flush with bottom of sleeve in floors, and sized to be a min of 2 in. larger than the sleeve diam. The sleeve is to be cast in place and may extend a max of 4 in. below the bottom of the deck and a max of 1 in. above the top surface of the concrete floor.
2B. Sheet Metal Sleeve — (Optional) - Max 12 in. diam, min 24 ga galv steel provided with a 24 ga galv steel square flange spot welded to the sleeve at approx mid-height, or flush with bottom of sleeve in floors, and sized to be a min of 2 in. larger than the sleeve diam. The sleeve is to be cast in place and may extend a max of 4 in. below the bottom of the deck and a max of 1 in. above the top surface of the concrete floor.
3. Through-Penetrant — One metallic pipe, tube or conduit to be installed either concentrically or eccentrically within the firestop system. The annular space between penetrant and periphery of opening shall be min 0 in. (point contact) to max 1-7/8 in. Penetrant may be installed with continuous point contact. Penetrant to be rigidly supported on both sides of floor or wall assembly. The following types and sizes of metallic penetrants may be used:
  A. Steel Pipe — Nom 30 in. diam (or smaller) Schedule 10 (or heavier) steel pipe.
  B. Iron Pipe — Nom 30 in. diam (or smaller) cast or ductile iron pipe.
  C. Copper Pipe — Nom 6 in. diam (or smaller) Regular (or heavier) copper pipe.
  D. Copper Tubing — Nom 6 in. diam (or smaller) Type L (or heavier) copper tubing.
  E. Conduit — Nom 6 in. diam (or smaller) steel conduit.
  F. Conduit — Nom 4 in. diam (or smaller) steel electrical metallic tubing (EMT).
4. Firestop System — The firestop system shall consist of the following:
  A. Packing Material — Min 4 in. thickness of min 4 pcf mineral wool batt insulation firmly packed into opening as a permanent form. Packing material to be recessed from top surface of floor or sleeve or from both surfaces of wall or sleeve as required to accommodate the required thickness of fill material.
  B. Fill, Void or Cavity Material* — Sealant — Min 1/4 in. thickness of fill material applied within the annulus, flush with top surface of floor or sleeve or with both surfaces of wall or sleeve. At the point or continuous contact locations between penetrant and concrete or sleeve, a min 1/4 in. diam bead of fill material shall be applied at the concrete or sleeve/ pipe penetrant interface on the top surface of floor and on both surfaces of wall.
  HILTI CONSTRUCTION CHEMICALS, DIV OF HILTI INC — FS-One Sealant
*Bearing the UL Classification Mark

HILTI
Hilti Firestop Systems

Reproduced by HILTI, Inc. Courtesy of Underwriters Laboratories, Inc.
June 27, 2007

System No. W-L-1249

F Ratings - 1 and 2 Hr (See Items 1 and 3)
T Rating - 1/2 Hr

CLASSIFIED UL C US
Classified by Underwriters Laboratories, Inc. to UL 1479 and CAN/ULC-S115

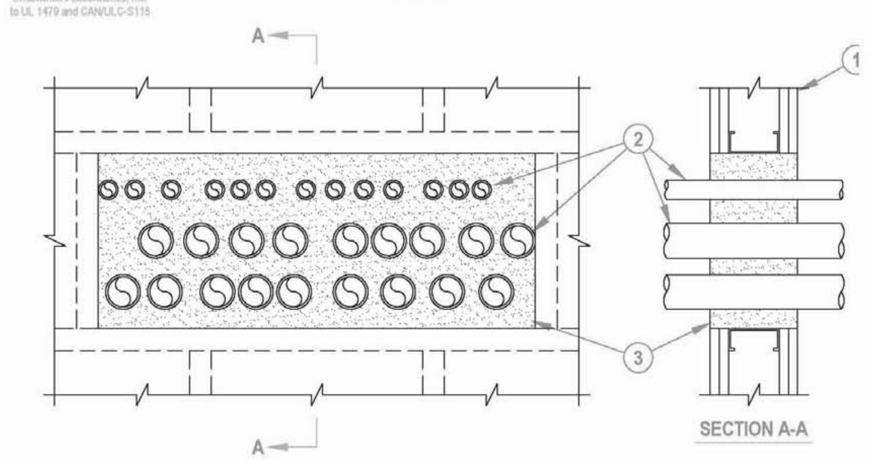

1. Wall Assembly The 1 or 2 hr fire-rated gypsum board/stud wall assembly shall be constructed of the materials and in the manner described in the individual U400 Series Wall or Partition Design in the UL Fire Resistance Directory and shall include the following construction features.
  A. Studs Steel studs 3-1/2 in. deep, fabricated from 25 MSG galv steel, spaced max 24 in. OC.
  B. Gypsum Boards* The gypsum board type, number of layers, fastener type and sheet orientation shall be as specified in the individual Wall and Partition Design. Max area of opening is 360 sq in. with max dimension of 30 in.
 The hourly F Rating of the firestop system is equal to the hourly fire rating of the wall assembly in which it is installed.
2. Through Penetrants One or more nom 2 in. diam (or smaller) rigid steel conduit or electrical metallic tubing (EMT) to be installed within the opening. The annular space between conduits or tubing shall be min 0 in. (point contact) to max 3-3/8 in. The annular space between conduits or tubing and periphery of opening shall be min 0 in. (point contact) to max 3 in. Conduit or tubing to be rigidly supported on both sides of wall assembly.
3. Fill Void or Cavity Material - Foam* Fill material applied within annulus flush with both surfaces of the wall. Min fill material thickness for 1 Hr F Rating is 4-3/4 in. Min fill material thickness for 2 Hr F Rating is 6 in.
 HILTI CONSTRUCTION CHEMICALS, DIV OF HILTI INC -- CP 620 Fire Foam
*Bearing the UL Classification Mark

HILTI
Hilti Firestop Systems

Reproduced by HILTI, Inc. Courtesy of Underwriters Laboratories, Inc.
December 7, 2001

System No. C-AJ-5091

F Rating — 2 Hr
T Ratings — 0 and 1 Hr (See Items 2 and 4)
L Rating At Ambient — 4 CFM/Sq Ft
L Rating At 400 F — Less Than 1 CFM/Sq Ft

CLASSIFIED UL C US
Classified by Underwriters Laboratories, Inc. to UL 1479 and CAN/ULC-S115

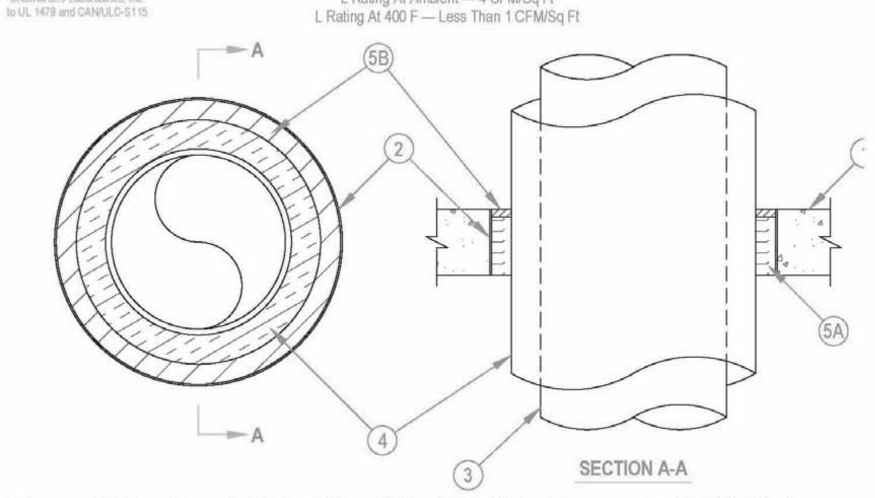

1. Floor or Wall Assembly — Min 4-1/2 in. (114 mm) thick reinforced lightweight or normal weight (100-150 pcf or 1600-2400 kg/m³) concrete. Wall may also be constructed of any UL Classified Concrete Blocks*. Max diam of opening is 29 in. (737 mm).
  See Concrete Blocks (CAZT) category in the Fire Resistance directory for names of manufacturers.
2. Metallic Sleeve — (Optional) — Nom 30 in. (762 mm) diam (or smaller) Schedule 10 (or heavier) steel pipe sleeve cast or grouted into floor or wall assembly, flush with floor or wall surfaces or extending a max of 3 in. (76 mm) above floor or beyond both surfaces of wall. If the steel sleeve extends beyond the top surface of the floor or both surfaces of the wall, the T Rating of the firestop system is 0 hr.
2A. Sheet Metal Sleeve — (Optional) - Max 6 in. (152 mm) diam, min 26 ga galv steel provided with a 26 ga galv steel square flange spot welded to the sleeve at approximately mid- height, or flush with bottom of sleeve in floors, and sized to be a min of 2 in. (51 mm) larger than the sleeve diam. The sleeve is to be cast in place flush with bottom surface of floor and may extend a max of 1 in. (25 mm) above the top surface of the floor.
2B. Sheet Metal Sleeve — (Optional) - Max 12 in. (305 mm) diam, min 24 ga galv steel provided with a 24 ga galv steel square flange spot welded to the sleeve at approximately mid- height, or flush with bottom of sleeve in floors, and sized to be a min of 2 in. (51 mm) larger than the sleeve diam. The sleeve is to be cast in place flush with bottom surface of floor and may extend a max of 1 in. (25 mm) above the top surface of the floor.
3. Through Penetrants — One metallic pipe or tubing to be installed either concentrically or eccentrically within the firestop system. Pipe or tubing to be rigidly supported on both sides of floor or wall assembly. The following types and sizes of metallic pipes or tubing may be used:
  A. Steel Pipe — Nom 12 in. (305 mm) diam (or smaller) Schedule 10 (or heavier) steel pipe.
  B. Iron Pipe — Nom 12 in. (305 mm) diam (or smaller) cast or ductile iron pipe.
  C. Copper Pipe — Nom 6 in. (152 mm) diam (or smaller) Regular (or heavier) copper pipe.
  D. Copper Tubing — Nom 6 in. (152 mm) diam (or smaller) Type L (or heavier) copper tubing.
4. Pipe Covering — Min 1/2 in. (13 mm) to max 2 in. (51 mm) thick hollow cylindrical heavy density (min 3.5 pcf or 56 kg/m³) glass fiber units jacketed on the outside with an all-service jacket. Longitudinal joints sealed with metal fasteners or factory-applied, self-sealing lap tape. Transverse joints secured with metal fasteners or with butt tape supplied with the product. The annular space between the insulated pipe and the edge of the periphery of the opening shall be min 1/2 in. (13 mm) to max 12 in. (305 mm). When thickness of pipe covering is less than 2 in. (51 mm), the T Rating for the firestop system is 0 hr.
  See Pipe Equipment Covering — Materials — (BRGU) category in the Building Materials Directory for names of manufacturers. Any pipe covering material meeting the above specifications and bearing the UL Classification Marking with a Flame Spread Index of 25 or less and a Smoke Developed Index of 50 or less may be used.
4A. Pipe Covering — (Not Shown) — As an alternate to Item 4, max 2 in. (51 mm) thick cylindrical calcium silicate (min 14 pcf or 224 kg/m³) units sized to the outside diam of the pipe or tube may be used. Pipe insulation secured with stainless steel bands or min 18 AWG stainless steel wire spaced max 12 in. (305 mm) OC. The annular space shall be min 1/2 in. (13 mm) to max 12 in. (305 mm).
5. Firestop System — The firestop system shall consist of the following:
  A. Packing Material — Min 4 in. (102 mm) thickness of min 4 pcf (64 kg/m³) mineral wool batt insulation firmly packed into opening as a permanent form. Packing material to be recessed from top surface of floor or from both surfaces of wall as required to accommodate the required thickness of fill material.
  B. Fill, Void or Cavity Material* — Sealant — Min 1/2 in. (13 mm) thickness of fill material applied within the annulus, flush with top surface of floor or with both surfaces of wall.
  HILTI CONSTRUCTION CHEMICALS, DIV OF HILTI INC — FS-One Sealant
*Bearing the UL Classification Mark

HILTI

Reproduced by HILTI, Inc. Courtesy of Underwriters Laboratories, Inc.
July 18, 2011

CRSA
649 E. South Temple
Salt Lake City, UT 84102
801.355.5915

MWL
11798 N. Lakeridge Pkwy.
Ashland, VA 23005
804-228-7473

State of Utah
Department of Administrative Services
DFCM
Division of Facilities Construction & Management
4110 State Office Building
Salt Lake City, Utah 84114
Phone: (801) 538 - 3018
Fax: (801) 538 - 3267

DIVISION OF FACILITIES CONSTRUCTION AND MANAGEMENT
REVIEWED FOR CODE COMPLIANCE
SIGNATURE: Enzo Calfa
DATE: 08-05-2014

STATE OF UTAH
#134096
MEHRDAD SAMIE
LICENSED ARCHITECT
04.28.2014
ARCHITECT-ENGINEER STAMP

Unified State Laboratory Module 2

4451 South 2700 West, Taylorsville, UT 84118

DFCM #:	13020300
Project #:	B13-024

DATE:	ISSUE TYPE:
APRIL 21, 2014	BID SET
CHECKED BY	J. NIELSEN
DRAWN BY	F. PITORE

UL DETAILS

GF014

VOLUME 1

C:\Users\fernando\Documents\A_13024_ModII_2013_fernando.rvt
7/14/2014 1:12:45 PM

Classified by Underwriters Laboratories, Inc. to UL 1479

System No. W-L-2078

F Ratings — 1 and 2 Hr (See Item 1)
T Ratings — 0, 1 and 2 Hr (See Items 2 and 3)
L Rating At Ambient — 3 CFM/sq ft
L Rating At 400 F — Less Than 1 CFM/sq ft

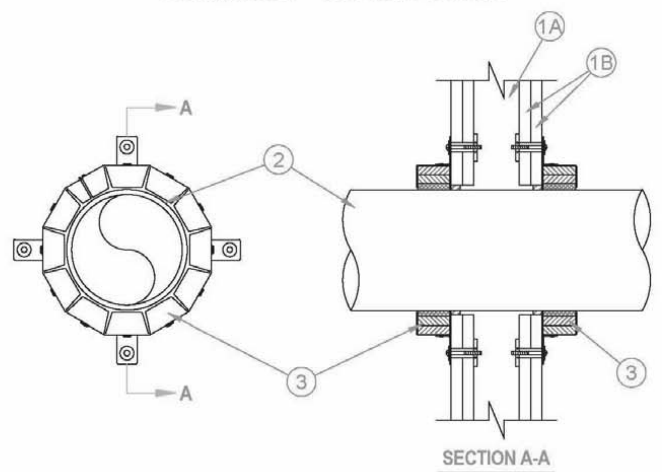

1. Wall Assembly — The fire-rated gypsum board/stud wall assembly shall be constructed of the materials and in the manner specified in the individual U300, U400 or V400 Series Wall and Partition Designs in the UL fire Resistance Directory and shall include the construction features noted below:
   A. Studs — Wall framing may consist of either wood studs or steel channel studs. Wood studs to consist of nom 2 by 4 in. lumber spaced max 16 in. OC. Steel studs to be min 2-1/2 in. wide and spaced max 24 in. OC.
   B. Gypsum Board* — Nom 5/8 in. thick gypsum board, as specified in the individual Wall and Partition Design. Max diam of opening is 11-1/2 in.
   The hourly F Rating of the firestop system is equal to the hourly fire rating of the wall assembly in which it is installed.
2. Through-Penetrants — One nonmetallic pipe, conduit or tubing to be installed within the firestop system. The annular space between pipe and periphery of opening shall be min 0 in. (point contact) to max 1/2 in. Pipe or conduit to be rigidly supported on both sides of the wall assembly. The following types and sizes of nonmetallic pipes may be used:
   A. Polyvinyl Chloride (PVC) Pipe — Nom 10 in. diam (or smaller) Schedule 40 solid-core or cellular core PVC pipe for use in closed (process or supply) or vented (drain, waste or vent) piping system.
   B. Chlorinated Polyvinyl Chloride (CPVC) Pipe — Nom 10 in. diam (or smaller) SDR13.5 CPVC pipe for use in closed (process or supply) piping systems.
   C. Acrylonitrile Butadiene Styrene (ABS) Pipe — Nom 6 in. diam (or smaller) Schedule 40 solid-core or cellular core ABS pipe for use in closed (process or supply) or vented (drain, waste or vent) piping systems
   D. Flame Retardant Polypropylene (FRPP) Pipe — Nom 6 in. diam (or smaller) Schedule 40 FRPP pipe for use in closed (process or supply) or vented (drain, waste or vent) piping system.
   E. Polyvinylidene Fluoride (PVDF) Pipe — Nom 4 in. diam (or smaller) PVDF pipe for use in closed (process or supply) or vented (drain, waste or vent) piping system.
   When max 6 in. diam pipe is used, T Rating is equal to the hourly fire rating of the wall. When nom 8 in. or 10 in. diam pipe is used, T Rating is 0 hr.
3. Firestop Device* — Firestop Collar — Firestop collar shall be installed in accordance with the accompanying installation instructions. Collar to be installed and latched around the pipe and secured to both sides of the wall using the anchor hooks provided with the collar. (Minimum two anchor hooks for 1-1/2 and 2 in. diam pipes, three anchor hooks for 3 and 4 in. diam pipes, four anchor hooks for 6 in. diam pipes, ten anchor hooks for 8 in. diam pipes and twelve anchor hooks for 10 in. diam pipes). The anchor hooks are to be secured to the surface of wall with 3/16 in. diam by 2-1/2 in. long steel toggle bolts along with washers. As an alternate for pipe sizes of nom 4 in. diam or less, min No. 10 by 1-1/2 in. long drywall or laminate screws with min 3/4 in. steel washers may be used. When the drywall or laminate screw is used, T Rating shall not exceed 1 hr.
   HILTI CONSTRUCTION CHEMICALS, DIV OF HILTI INC — CP 643 50/1.5"N, CP 643 63/2"N, CP 643 90/3"N, CP 643 110/4"N, CP 643 160/6"N, CP 644 200/8" andCP 644 250/10" Firestop Collars
4. Fill, Void or Cavity Material* — Sealant - (Not Shown) — Min 1/2 in. thickness of sealant applied within the annular space for nom 8 in. and 10 in. diam pipes, flush with each side of wall. Sealant in annular space is optional for max 6 in. diam pipes. A min 1/4 in. thickness of sealant is required within the annular space, flush with each side of wall, to attain the L Ratings for max 6 in. diam pipes.
   HILTI CONSTRUCTION CHEMICALS, DIV OF HILTI INC — FS-One Sealant

*Bearing the UL Classification Mark

Hilti Firestop Systems

Reproduced by HILTI, Inc. Courtesy of Underwriters Laboratories, Inc. November 29, 2005

Classified by Underwriters Laboratories, Inc. to UL 1479 and CAN/ULC-S115

System No. W-L-7040

F Ratings — 1 and 2 Hrs (See Items 1 and 3)
T Rating — 0 Hr
L Rating at Ambient — Less Than 1 CFM/sq ft
L Rating at 400 F — Less Than 1 CFM/sq ft

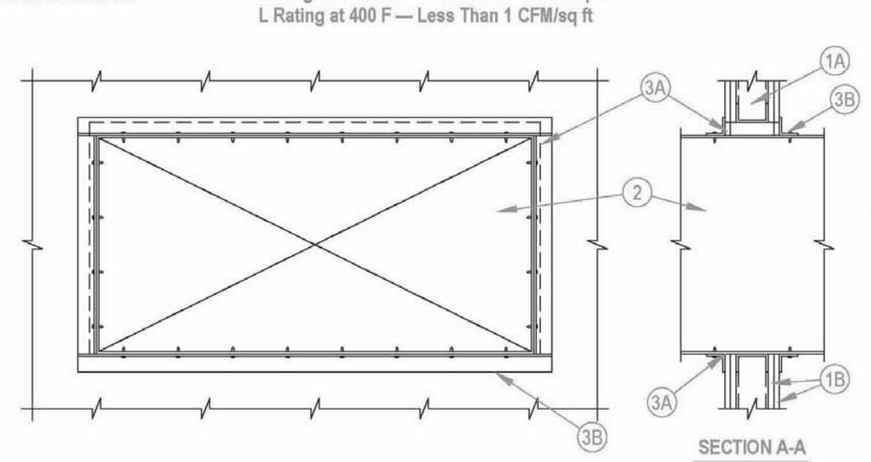

1. Wall Assembly — The fire-rated gypsum wallboard/stud wall assembly shall be constructed of the materials and in the manner specified in the individual U300 or U400 Series Wall and Partition Designs in the Fire Resistance Directory and shall include the following construction features:
   A. Studs — Wall framing may consist of either wood studs or steel channel studs. Wood studs to consist of nom 2 by 4 in. lumber spaced 16 in. OC. Steel studs to be min 2-1/2 in. wide and spaced max 24 in. Additional framing members shall be used to completely frame around opening.
   B. Gypsum Board* — Nom 5/8 in. thick with square or tapered edges. The gypsum wallboard type, number of layers and sheet orientation shall be as specified in the individual Wall and Partition Design Number. Max area of opening is 1300 in. with the dimension of 50 in. The hourly F rating of the firestop system is equal to the hourly fire rating of the wall assembly in which it is installed.
2. Steel Duct — Nom 24 in. by 48 in. (or smaller) No. 24 gauge (or heavier) galv steel duct to be installed within the firestop system. The annular space shall be min 0 (point contact) in. to a max 2 in. Duct to be rigidly supported on both sides of the wall assembly.
3. Firestop System — The firestop system shall consist of the following:
   A. Fill, Void or Cavity Material*—Sealant — Min 5/8 in. thickness of fill material applied within annulus flush with both surfaces of wall. At point contact location, a min 1/2 in. diam bead of fill material shall be applied to the wall/duct interface on both surfaces of wall.
   HILTI CONSTRUCTION CHEMICALS, DIV OF HILTI INC — FS-ONE Sealant, CP601S Elastomeric Firestop Sealant or CP606 Flexible Sealant.
   B. Steel Retaining Angle — No. 18 MSG (0.048 in.) galv steel angles cut to fit contour of duct with a 2 in. overlap on the duct and a min 1 in. overlap on the gypsum board assembly on both sufaces of wall. 2 in. leg of angle secured to duct with min No. 8 by 3/4 in. long sheet metal screws, spaced a max of 6 in. OC. When bead of fill material is used at joint contact locations, angles shall be installed prior to full material curing.

*Bearing the UL Classification Mark

Hilti Firestop Systems

Reproduced by HILTI, Inc. Courtesy of Underwriters Laboratories, Inc. August 27, 2010

Classified by Underwriters Laboratories, Inc. to UL 1479 and CAN/ULC-S115

System No. W-L-5029

ANSI/UL1479 (ASTM E814)	CAN/ULC S115
F Ratings — 1, 2 and 3 Hr (See Items 1, 3 and 4)	F Ratings — 1, 2 and 3 Hr (See Items 1, 3 and 4)
T Ratings — 0, 1/2, 1 and 1-1/4 Hr (See Item 3)	FT Ratings — 0, 1/2, 1 and 1-1/4 Hr (See Item 3)
L Rating At Ambient — 4 CFM/Sq Ft	FH Ratings — 1, 2 and 3 Hr (See Items 1, 2 and 4)
L Rating At 400 F — Less Than 1 CFM/Sq Ft	FTH Ratings — 0, 1/2, 1 and 1-1/4 Hr (See Item 3)
	L Rating At Ambient — 4 CFM/Sq Ft
	L Rating At 400 F — Less Than 1 CFM/Sq Ft

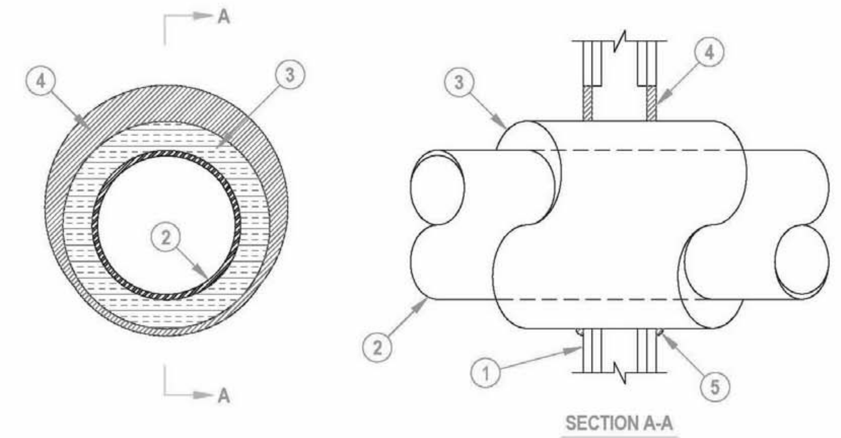

1. Wall Assembly — The 1, 2 or 3 hr fire-rated gypsum board/stud wall assembly shall be constructed of the materials and in the manner specified in the individual U300, U400, V400 or W400 Series Wall and Partition Designs in the UL Fire Resistance Directory and shall include the following construction features:
   A. Studs — Wall framing may consist of either wood studs or steel channel studs. Wood studs to consist of nom 2 by 4 in. (51 by 102 mm) lumber spaced 16 in. (406 mm) OC. Steel studs to be min 2-1/2 in. (64 mm) wide for 1 and 2 hr F and FH rating and 3-1/2 in. (89 mm) wide for 3 hr F and FH rating and spaced max 24 in. (610 mm) OC.
   B. Gypsum Board* — Min 5/8 in. (16 mm) thick with square or tapered edges. The gypsum board type, thickness, number of layers, fastener type and sheet orientation shall be as specified in the individual Wall and Partition Design. Max diam of opening is 18-5/8 in. (473 mm).
   The hourly F and FH Ratings of the firestop system are equal to the hourly fire rating of the wall assembly in which it is installed.
2. Through Penetrants — One metallic pipe or tubing to be installed within the firestop system. Pipe or tubing to be rigidly supported on both sides of wall assembly. The following types and sizes of metallic pipes or tubing may be used:
   A. Steel Pipe — Nom 12 in. (305 mm) diam (or smaller) Schedule 10 (or heavier) steel pipe.
   B. Iron Pipe — Nom 12 in. (305 mm) diam (or smaller) cast or ductile iron pipe.
   C. Copper Tubing — Nom 6 in. (152 mm) diam (or smaller) Type L (or heavier) copper tubing. When the hourly F or FH Rating of the firestop system is 3 hr, the nom diam of copper tube shall not exceed 4 in. (102 mm).
   D. Copper Pipe — Nom 6 in. (152 mm) diam (or smaller) Regular (or heavier) copper pipe. When the hourly F or FH Rating of the firestop system is 3 hr, the nom diam of copper pipe shall not exceed 4 in. (102 mm).
3. Pipe Covering* — Nom 1, 1-1/2 or 2 in. (25, 38 or 51 mm) thick hollow cylindrical heavy density (min 3.5 pcf or 56 kg/m3) glass fiber units jacketed on the outside with an all service jacket. Longitudinal joints sealed with metal fasteners or factory-applied self-sealing lap tape. Transverse joints secured with metal fasteners or with butt tape supplied with the product. For 1 and 2 hr F and FH Ratings, the annular space between insulated penetrant and periphery of opening shall be min 0 in. (point contact) to max 1-7/8 in. (48 mm). For 3 hr F and FH Ratings, the annular space shall be min 0 in. (point contact) to max 1-1/4 in. (32 mm).
   See Pipe and Equipment Covering — Materials (BRGU) category in the Building Material Directory for the names of manufacturers. Any pipe covering material meeting the above specifications and bearing the UL Classification Marking with a Flame Spread Index of 25 or less and a Smoke Developed Index of 50 or less may be used.
   The hourly T, FT, FTH Ratings of the firestop system are 1/2 hr for 1 hr rated walls and 1 hr for 2 hr rated walls. For 3 hr rated walls, the hourly T, FT and FTH Ratings when steel and iron pipes are used are 1 hr. For 3 hr rated walls, the hourly T, FT and FTH Ratings when copper penetrants are used are 1-1/4 hr for 2 in. (51 mm) thick pipe covering and 0 hr for pipe covering thickness less than 2 in. (51 mm).

3A. Pipe Covering* — (Not Shown) — As an alternate to Item 3, max 2 in. (51 mm) thick cylindrical calcium silicate (min 14 pcf) units sized to the outside diam of the pipe or tube may be used. Pipe insulation secured with stainless steel bands or min 18 AWG stainless steel wire spaced max 12 in. (305 mm) OC. When the alternate pipe covering is used, the T and FT Rating shall be as specified in item 3 above.
   See Pipe and Equipment Covering — Materials (BRGU) category in the Building Materials Directory for names of manufacturers. Any pipe covering material meeting the above specifications and bearing the UL Classification Marking with a Flame Spread Index of 25 or less and a Smoke Developed Index of 50 or less may be used.

4. Fill, Void or Cavity Material* — Sealant — For 1 and 2 hr F and FH Rating, min 5/8 in. (16 mm) thickness of fill material applied within the annulus, flush with both surfaces of wall. For 3 hr F and FH Rating, min 1 in. (25 mm) thickness of fill material applied within the annulus, flush with both surfaces of wall. At the point contact location between pipe covering and gypsum board, a min 1/2 in. (13 mm) diam bead of fill material shall be applied at the pipe covering/gypsum board interface on both surfaces of wall.
   HILTI CONSTRUCTION CHEMICALS, DIV OF HILTI INC — FS-One Sealant

*Bearing the UL Classification Mark

Hilti Firestop Systems

Reproduced by HILTI, Inc. Courtesy of Underwriters Laboratories, Inc. May 30, 2012

Classified by Underwriters Laboratories, Inc. to UL 1479 and CAN/ULC-S115

System No. C-AJ-7051

F Rating - 3 Hr
T Rating = 1 Hr

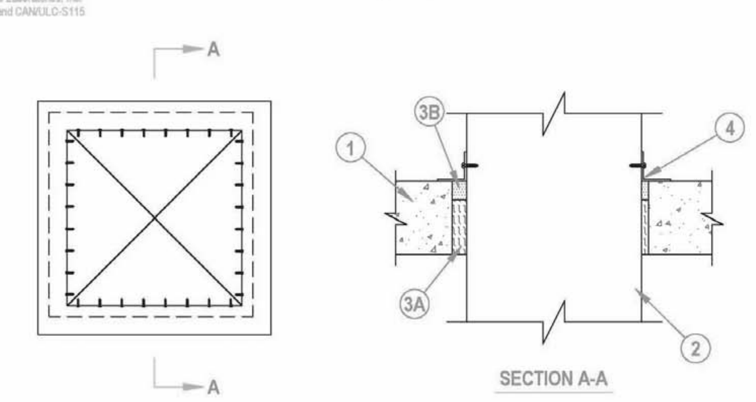

1. Floor or Wall Assembly - Min 4-1/2 in. thick reinforced lightweight or normal weight (100-150 pcf) concrete. Wall may also be constructed of any Underwriters Laboratories Inc. Classified Concrete Blocks*. Max area of opening is 1024 in. sq. with a max dimension of 32 in.
   See Concrete Blocks (CAZT) category in the Fire Resistance Directory for names of manufacturers.
2. Steel Duct - Nom 30 by 30 in. (or smaller) No. 24 gauge (or heavier) galv steel duct. One steel duct to be positioned within the firestop system. The annular space shall be min 1/4 in. to a max 1-3/4 in. Duct to be rigidly supported on both sides of floor or wall assembly.
3. Firestop System - The firestop system shall consist of the following:
   A. Packing Materials - Min 3-1/2 in. thickness of min 4 pcf mineral wool batt insulation firmly packed into opening as a permanent form between the bare steel duct and the periphery of the opening . Packing material to be recessed from top surface of floor or both surfaces of wall as required to accommodate the required thickness of fill material.
   B. Fill, Void or Cavity Material* - Sealant - Min 1 in. thickness of fill material applied within annulus, flush with top surface of floor or both surfaces of wall.
   HILTI CONSTRUCTION CHEMICALS, DIV OF HILTI, INC. - CP606 Flexible Firestop Sealant or FS-ONE Sealant
4. Steel Retaining Angle - Nom 2 in. by 2 in. by No. 16 gauge (or heavier) steel angles attached to all four sides of the steel duct on the top surface or both surfaces of the wall. The angles shall be attached with No. 8 (or larger) steel sheet metal screws spaced max of 1 in. from each end and a max of 3 in. OC.

*Bearing the UL Classification Marking

Hilti Firestop Systems

Reproduced by HILTI, Inc. Courtesy of Underwriters Laboratories, Inc. October 20, 2000

Classified by Underwriters Laboratories, Inc. to UL 1479 and CAN/ULC-S115

System No. C-AJ-1184

F Rating -- 3 Hr
T Rating -- 0 Hr

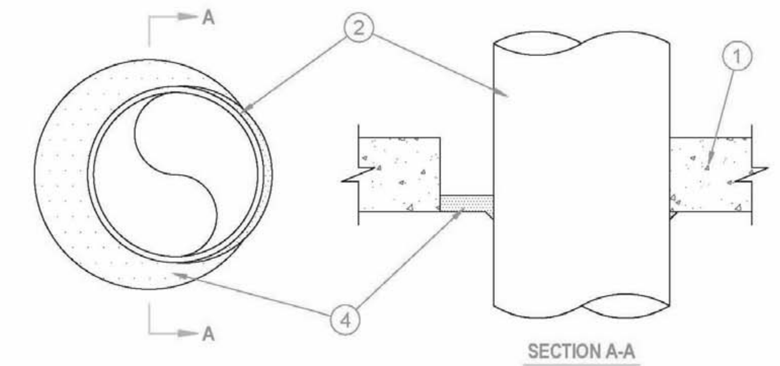

1. Floor or Wall Assembly -- Min 4-1/2 in. thick reinforced lightweight or normal weight (100-150 pcf) concrete. Wall may also be constructed of any UL Classified Concrete Blocks*. Floor may also be constructed of any min 7-1/2 in. thick UL Classified hollow core Precast Concrete Units*. Max diam of opening is 14 in. when concrete floor or wall is used and max 7 in. when precast concrete units are used.
   See Concrete Blocks (CAZT) and Precast Concrete Units (CFTV) categories in the Fire Resistance Directory for names of manufacturers.
2. Through-Penetrants -- One metallic pipe, conduit or tubing to be installed either concentrically or eccentrically within the firestop system. The annular space between pipe, conduit or tubing and periphery of opening shall be min 0 in. (point contact) to max 3-1/4 in. Pipe, conduit or tubing to be rigidly supported on both sides of floor or wall assembly. The following types and sizes of metallic pipes, conduits or tubing may be used:
   A. Steel Pipe -- Nom 10 in. diam (or smaller) Schedule 10 (or heavier) steel pipe.
   B. Iron Pipe -- Nom 10 in. diam (or smaller) cast or ductile iron pipe.
   C. Conduit -- Nom 4 in. diam (or smaller) steel electrical metallic tubing or steel conduit.
   D. Copper Tubing -- Nom 4 in. diam (or smaller) Type L (or heavier) copper tubing.
   E. Copper Pipe -- Nom 4 in. diam (or smaller) regular (or heavier) copper pipe.
3. Forms -- (Not Shown, Optional) -- Used as a form to prevent leakage of fill material during installation. Forms to be rigid sheet material, cut to fit the contour of the penetrating item and positioned as required to accommodate the required thickness of fill material. Forms to be removed after fill material has cured. Additional forming material may be used concrete block wall is penetrated. A min 1/2 in. thickness of min 4 pcf mineral wool batt insulation is firmly packed into the annulus as a permanent form and recessed from both surfaces of the wall as required to accommodate the required thickness of fill material.
4. Fill, Void or Cavity Material* -- Sealant -- Min 1 in. thickness of fill material applied within the annulus. At the point contact location between through penetrant and concrete, a min 1/2 in. diam bead of fill material shall be applied at the concrete through penetrant interface. When precast concrete units are used, the fill material shall be installed within annular space, flush with lower surface of floor. When concrete block wall is penetrated, a min 1 in. thickness of fill material shall be applied within the annulus flush with both surfaces of wall.
   HILTI CONSTRUCTION CHEMICALS, DIV OF HILTI INC -- FS605 or FS-ONE Sealant

*Bearing the UL Classification Mark

Hilti Firestop Systems

Reproduced by HILTI, Inc. Courtesy of Underwriters Laboratories, Inc. March 12, 1999

Classified by Underwriters Laboratories, Inc. to UL 1479 and CAN/ULC-S115

System No. W-L-7155

F Ratings — 1 and 2 Hr (See Item 1)
T Rating — 0 Hr
L Rating at Ambient — Less Than 1 CFM/sq ft
L Rating at 400 F — Less Than 1 CFM/sq ft

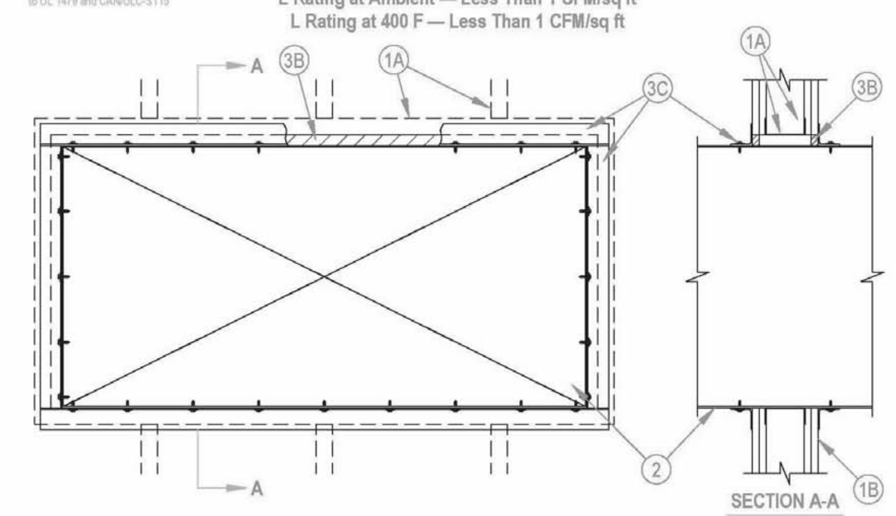

1. Wall Assembly — The 1 or 2 hr fire-rated gypsum wallboard/stud wall assembly shall be constructed of the materials and in the manner described in the individual U400 or V400 Series Wall or Partition Design in the UL Fire Resistance Directory and shall include the following construction features:
   A. Studs — Wall framing shall consist of min 3-1/2 in. (89 mm) wide steel channel studs spaced max 24 in. (610 mm) OC. Additional steel studs shall be used to completely frame the opening.
   B. Gypsum Board* — 5/8 in. (16 mm) thick, 4 ft (1.22 m) wide with square or tapered edges. The gypsum board type, thickness, number of layers, fastener type and sheet orientation shall be as specified in the individual U400 or V400 Series Design in the UL Fire Resistance Directory. Max area of opening is 73.7 sq ft (6.85 m²) with a max dimension of 104 in. (2.64 m).
   The hourly F Rating of the firestop system is equal to the hourly fire rating of the wall assembly in which it is installed.
2. Steel Duct — Max 100 in. by 100 in. (2.5 by 2.5 m) galv steel duct to be installed either concentrically or eccentrically within the firestop system. The duct shall be constructed and reinforced in accordance with SMACNA construction standards. The space between the steel duct and periphery of opening shall be min 0 in. (point contact) to max 2 in. (51 mm). Steel duct to be rigidly supported on both sides of the wall assembly.
3 Firestop System — The firestop system shall consist of the following:
   A. Packing Material — (Optional, Not Shown) — Polyethylene backer rod, mineral wool batt insulation or fiberglass batt insulation friction fitted into annular space. Packing material to be recessed from both surfaces of wall to accommodate the required thickness of fill material.
   A1. Packing Material — Required as specified in Table below. Min 3-3/4 in. (95 mm) or 5 in. (127 mm) thickness of min 4 pcf (64 kg/m³) mineral wool batt insulation firmly packed into opening as a permanent form for 1 and 2 hr rated assemblies, respectively. Packing material to be recessed from both surfaces of wall to accommodate the required thickness of fill material.
   B. Fill, Void or Cavity Material* — Sealant — Min 5/8 in. (16 mm) thickness of fill material applied within the annulus, flush with both surfaces of wall. Min 1/4 in. (6 mm) diam bead of fill material shall be applied at the point contact location between the steel duct and the gypsum board.
   HILTI CONSTRUCTION CHEMICALS, DIV OF HILTI INC — FS-ONE Sealant or CP606 Flexible Firestop Sealant
   C. Steel Retaining Angles — Min No. 16 gauge galv steel angles sized to lap steel duct a min of 2 in. (51 mm) and to lap wall surfaces a min of 1 in. (25 mm). When max duct dimension does not exceed 48 in. (122 cm) and duct area does not exceed 1300 in² (8387 cm²), angles may be min No. 18 gauge galv steel. Angles attached to steel duct on both sides of wall with min No. 10 by 1/2 in. (13 mm) long steel sheet metal screws located a max of 1 in. (25 mm) from each end of steel duct and spaced a max of 6 in. (152 mm) OC. Steel angles are optional for those sides of duct that do not exceed the dimension specified in Table below, dependent on packing material and annular space as specified.

Max Duct Dimension	Duct Thickness	Annular Space	Packing Material	Angle (Item 3C) Required
24 in. (610 mm)	24 ga or heavier	1/2 in. min to 1 in. max (13 to 25 mm)	Item 3A1	No

*Bearing the UL Classification Mark

Hilti Firestop Systems

Reproduced by HILTI, Inc. Courtesy of Underwriters Laboratories, Inc. August 27, 2010

Classified by Underwriters Laboratories, Inc. to UL 1479 and CAN/ULC-S115

System No. W-L-7156

ANSI/UL1479 (ASTM E814)	CAN/ULC S115
F Ratings — 1 and 2 Hr (See Item 1)	F Ratings — 1 and 2 Hr (See Item 1)
T Rating — 0 Hr	FT Rating — 0 Hr
	FH Ratings — 1 and 2 Hr (See Item 1)
	FTH Rating — 0 Hr

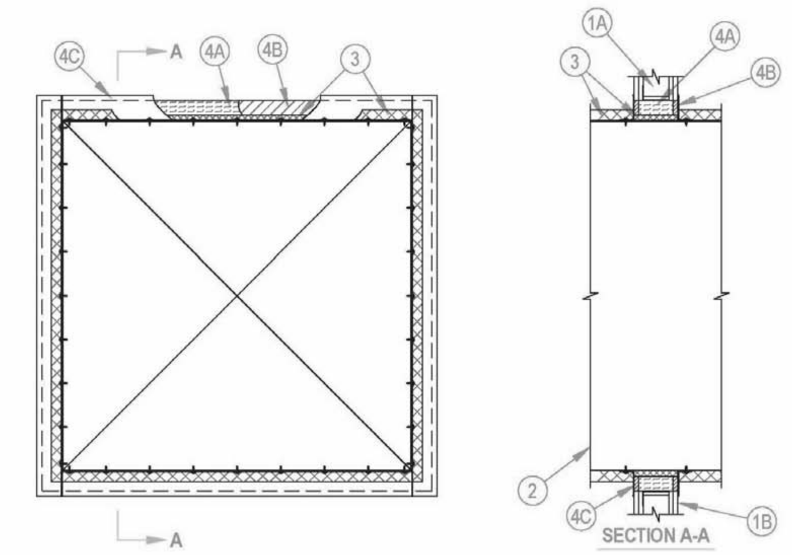

1. Wall Assembly — The 1 or 2 hr fire-rated gypsum board/stud wall assembly shall be constructed of the materials and in the manner specified in the individual U300, U400 or V400 Series Wall and Partition Designs in the UL Fire Resistance Directory and shall include the following construction features:
   A. Studs — Wall framing shall consist of either wood studs or steel channel studs. Wood studs to consist of nom 2 by 4 in. (51 by 102 mm) lumber spaced max 16 in. (406 mm) OC. Steel studs to be min 3-1/2 in. (89 mm) wide and spaced max 24 in. (610 mm) OC. Additional framing members shall be used to completely frame around opening.
   B. Gypsum Board* — Min 5/8 in. (16 mm) thick, 4 ft (1.2 m) wide with square or tapered edges. The gypsum board type, thickness, number of layers and orientation shall be as specified in the individual U300, U400 or V400 Wall and Partition Design. Max size of opening is 210 sq in. (1355 cm²) with a max width of 14-1/2 in. (368 mm) for wood studs. Max size of opening is 76.2 sq ft. (7 m²) with a max width of 105-1/2 in. (2.7 m) for steel studs.
   The hourly F Rating of the firestop system is equal to the hourly fire rating of the wall in which it is installed.
2. Steel Duct — Max 100 by 100 in. (2.5 by 2.5 m) steel duct to be installed within the framed opening. The duct shall be constructed and reinforced in accordance with SMACNA construction standards. Steel duct to be rigidly supported on both sides of wall assembly.
3. Batts and Blankets* — Nom 1-1/2 or 2 in. (38 or 51 mm) thick glass fiber batt or blanket (min 3/4 pcf or 12 kg/m³) jacketed on the outside with a foil-scrim-kraft facing. Longitudinal and transverse joints sealed with aluminum foil tape. During the installation of the fill material, the batt or blanket shall be compressed minimum 50% such that the annular space within the firestop system shall be min 1/2 in. (13 mm) to max 2 in. (51 mm).
   See Batts and Blankets (BKNV) category in the Building Materials Directory for names of manufacturers. Any batt or blanket meeting the above specifications and bearing the UL Classification Marking with a Flame Spread Index of 25 or less and a Smoke Developed Index 50 or less may be used.
4. Firestop System — The firestop system shall consist of the following:
   A. Packing Material — Min 3-5/8 (92 mm) or 4-7/8 in. (124 mm) thickness of min 4 pcf (64 kg/m³) mineral wool batt insulation firmly packed into opening as a permanent form for 1 or 2 hr fire-rated walls, respectively. Packing material to be recessed from both surfaces of wall to accommodate the required thickness of fill material.
   B. Fill, Void or Cavity Material* — Sealant — Min 5/8 in. (16 mm) thickness of fill material applied within annulus, flush with both surfaces of wall.
   HILTI CONSTRUCTION CHEMICALS, DIV OF HILTI INC — FS-ONE Sealant
   C. Steel Retaining Angles — Min No. 16 gauge (0.059 in. or 1.5 mm) galv steel angles sized to lap steel duct a min of 2 in. 51 mm) and lap wall surfaces a min of 1 in. (25 mm). Angles attached to steel duct on both sides of wall with min No. 10 steel sheet metal screws spaced a max of 1 in. (25 mm) from each end of steel duct and spaced a max of 6 in. (152 mm) OC. When max duct dimension does not exceed 48 in. (122 cm) and duct area does not exceed 1300 in² (8387 cm²), angles may be min No. 18 gauge galv steel. Angles attached to steel duct on both sides of wall with min No. 10 by 1/2 in. (13 mm) long steel sheet metal screws located a max of 1 in. (25 mm) from each end of steel duct and spaced a max of 6 in. (152 mm) OC. When max 1-1/2 in. (38 mm) thick insulation is used, steel angles are optional for those sides of duct that do not exceed the dimension specified in Table below, dependent on packing material and annular space as specified.

Max Duct Dimension	Duct Thickness	Annular Space	Packing Material	Angle (Item 3C) Required
24 in. (610 mm)	24 ga or heavier	1/2 in. min to 1 in. max (13 to 25 mm)	Item 3A1	No

*Bearing the UL Classification Mark

Hilti Firestop Systems

Reproduced by HILTI, Inc. Courtesy of Underwriters Laboratories, Inc. December 02, 2011

CRSA
649 E. South Temple
Salt Lake City, UT 84102
801.355.5915

MWL
11798 N. Lakeridge Pkwy.
Ashland, VA 23005
804-228-7473

State of Utah
Department of Administrative Services
DFCM
Division of Facilities Construction & Management
4110 State Office Building
Salt Lake City, Utah 84114
Phone: (801) 538 - 3018
Fax: (801) 538 - 3267

DIVISION OF FACILITIES CONSTRUCTION AND MANAGEMENT
REVIEWED FOR CODE COMPLIANCE
SIGNATURE: Enzo Calfa
DATE: 08-05-2014

STATE OF UTAH
#134098
MEHRDAD SAMIE
LICENSED ARCHITECT
04.28.2014
ARCHITECT-ENGINEER STAMP

Unified State Laboratory Module 2

4451 South 2700 West, Taylorsville, UT 84118

DFCM #: 13020300
Project #: B13-024

DATE:	ISSUE TYPE:
APRIL 21, 2014	BID SET
CHECKED BY	J. NIELSEN
DRAWN BY	F. PITORE

UL DETAILS

GF015

VOLUME 1

C:\Users\fernando\Documents_A_13024_ModII_2013_fernando.rvt
7/14/2014 1:12:55 PM

System No. F-A-1105

ANSI/UL1479 (ASTM E814)	CAN/ULC S115
F Rating - 2 Hr	F Rating - 2 Hr
T Rating - 2 Hr	FT Rating - 2 Hr
L Rating At Ambient - Less Than 1 CFM/sq ft	FH Rating - 2 Hr
L Rating At 400 F - 4 CFM/sq ft	FTH Rating - 2 Hr
W Rating - Class 1 (See Item 3B)	L Rating At Ambient - Less Than 1 CFM/sq ft
	L Rating At 400 F - 4 CFM/sq ft

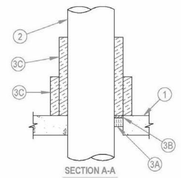

SECTION A-A

1. Floor Assembly — Min 4-1/2 in. (114 mm) thick reinforced lightweight or normal weight (100-150 pcf or 1600-2400 kg/m³) concrete. As an alternate, any min 2 hr fire rated D700, D800 or D900 Series Floor-Ceiling Design in the UL Fire Resistance Directory having a min 2-1/2 in. (64 mm) thickness of lightweight or normal weight (100-150 pcf or 1600-2400 kg/m³) concrete topping over the steel deck may be used. Max diam of opening is 12-3/4 in. (324 mm).
2. Through-Penetrant — One metallic pipe installed concentrically or eccentrically within opening. Annular space between penetrant and periphery of opening shall be min of 0 in. (point contact) to max 2 in. (51 mm). Penetrant to be rigidly supported on both sides of floor assembly. The following types and sizes of penetrants may be used:
   A. Steel Pipe — Nom 10 in. (254 mm) diam (or smaller) Schedule 40 (or heavier) steel pipe.
   B. Iron Pipe — Nom 10 in. (254 mm) diam (or smaller) cast or ductile iron pipe.
   C. Conduit — Nom 4 in. (102 mm) diam (or smaller) steel electrical metallic tubing or nom 6 in. (152 mm) diam (or smaller) rigid steel conduit.
3. Firestop System — The firestop system shall consist of the following:
   A. Packing Material — Min 2 in. (51 mm) thickness of min 4 pcf (64 kg/m³) mineral wool batt insulation firmly packed into opening as a permanent form. When CP 604 sealant is used (see Item 3B), min thickness of packing material is 4 in. (102 mm) and min thickness of floor is 4-1/2 in. (114 mm). Packing material to be recessed from top surface of floor to accommodate the required thickness of fill material.
   B. Fill, Void or Cavity Material* - Sealant — Min 1/2 in. (13 mm) thickness of sealant applied within the annulus, flush with top surface of floor.
   HILTI CONSTRUCTION CHEMICALS, DIV OF HILTI INC — FS-ONE Sealant or CP 604 Self-Leveling Firestop Sealant
   W Rating applies only when CP 604 Sealant is used.
   C. Duct Wrap Material* — Encapsulated duct wrap tightly wrapped around penetrant to extend 24 in. (610 mm) above the floor for penetrants of nom 4 in. (102 mm) diam or smaller, and 36 in. (914 mm) above floor for penetrants greater than a nom 4 in. (102 mm) diam. An additional layer of encapsulated duct wrap tightly wrapped around the first layer of duct wrap to extend 12 in. (305 mm) (914 mm) above floor. All longitudinal seams of both layers of duct wrap and joints between layers of duct wrap are sealed with foil tape. One of the following types and thicknesses of duct wrap may be used:
   C1. Nom 1-1/2 in. (38 mm) or 2 in. (51 mm) thick encapsulated duct wrap.
   UNIFRAX I, L L C — Fyrewrap Duct Insulation or FireWrap Duct 1.5 Insulation
   C2. Nom 1-1/2 in. (38 mm) thick encapsulated duct wrap.
   THERMAL CERAMICS INC — FireMaster FastWrap XL Duct Insulation
*Bearing the UL Classification Mark

HILTI Firestop Systems

Reproduced by HILTI, Inc. Courtesy of Underwriters Laboratories, Inc. August 09, 2011

System No. F-A-5046

ANSI/UL1479 (ASTM E814)	CAN/ULC S115
F Ratings — 2 and 3 Hr (See Items 1 and 1A)	F Ratings — 2 and 3 Hr (See Items 1 and 1A)
T Ratings — 0 and 1/2 Hr (See Item 2)	FT Ratings — 0 and 1/2 Hr (See Item 2)
	FH Ratings — 2 and 3 Hr (See Items 1 and 1A)
	FTH Ratings — 0 and 1/2 Hr (See Item 2)

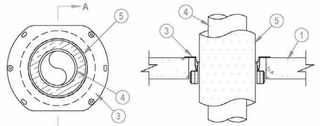

SECTION A-A

1. Floor Assembly — Min 2-1/2 in. (64 mm) to max 8 in. (203 mm) thick reinforced lightweight or normal weight (100-150 pcf or 1600-2400 kg/m³) concrete. When concrete thickness is min 4-1/2 in. (114 mm), F Rating is 3 hr.
1A. Floor Assembly — (Optional, Not Shown) — The fire rated concrete and steel deck floor assembly shall be constructed of the materials and in the manner specified in the individual D700, D800 or D900 Series designs in the UL Fire Resistance Directory and as summarized below:
   A. Concrete — Min 2-1/2 in. (64 mm) to max 8 in. (203 mm) thick reinforced lightweight or normal weight (100-150 pcf or 1600-2400 kg/m³) concrete, as measured over crest of fluted steel deck. When concrete topping thickness is min 4-1/2 in. (114 mm), F Rating is 3 hr.
   B. Steel Floor and Form Units* — Composite or non-composite max 3 in. (76 mm) deep galv steel fluted units as specified in the individual Floor-Ceiling Design.
2. Metallic Sleeve — (Optional, Not Shown) - Nom 4, 5 or 6 in. (102, 127 or 152 mm) diam Schedule 10 (or heavier) steel sleeve cast or grouted into floor assembly, flush with floor surfaces. When metallic sleeve is used, the T, FT and FTH Ratings are 0 Hr.
2A. Sheet Metal Sleeve — (Optional, Not Shown) - Nom 4, 5, 6 or 9 in. (102, 127, 152 or 229 mm) diam, min 26 ga galv steel provided with a 26 ga galv steel square flange spot welded to the sleeve at approx mid-height, or flush with bottom of sleeve in floors, and sized to be a min of 2 in. (51 mm) larger than the sleeve diam. The sleeve is to be cast in place and may extend a max of 4 in. (102 mm) below the bottom of the deck and flush with the top surface of the concrete floor. When sheet metal sleeve is used, the T, FT and FTH Ratings are 0 Hr.
3. Firestop Device* — Drop-in firestop device installed in core-drilled or sleeved opening in concrete floor assembly in accordance with accompanying installation instructions. The firestop device flange should be secured to the top surface of the floor with three 1/4 in. (6 mm) diam by min 1-1/4 in. (32 mm) long steel expansion bolts or screw anchors (installed in a triangular fashion through holes provided). As alternates to the anchors specified above, Hilti 1/4 in. (6 mm) diam by 1-1/4 in. (32 mm) long KWIK-CON II+ concrete screw anchor, Hilti 1/4 in. (6 mm) diam by 1-3/4 in. (45 mm) long KWIK-BOLT 3 steel expansion anchor or Hilti 1/4 in. (6 mm) by 3/4 in. (19 mm) long Metal HIT Anchor may be used. In addition, for nom 2 in. (51 mm), 3 in. (76 mm) and 4 in. (102 mm) firestop devices, four 11/16 in. (18 mm) long Hilti X-GH P18 MX steel fasteners may be installed through the steel flange, two on each side. The firestop devices shall be installed as detailed in the following table:

Nom Pipe or Tube (Item 4) Diam, in. (mm)	Insulation Type (Item 5 or 5A) and Thickness, in. (mm)	Firestop Device	Core Hole or Sleeve Diam, in. (mm)
1/2 (13)	3/4 or 1 (19 or 25) AB/PVC	CFS-DID 2"MD	4 (102)
1 (25)	3/4 or 1 (19 or 25) AB/PVC	CFS-DID 3"MD	5 (127)
2 (51)	3/4 or 1 (19 or 25) AB/PVC	CFS-DID 4"MD	6 (152)
4 (102)	3/4 or 1 (19 or 25) AB/PVC	CFS-DID 6"MD	9 (229)
1/2 (13)	1 (25) Glass Fiber	CFS-DID 2"MD	4 (102)
1 (25)	1 (25) Glass Fiber	CFS-DID 3"MD	5 (127)
1 (25)	1-1/2 (38) Glass Fiber	CFS-DID 4"MD	6 (152)
2 (51)	1 (25) Glass Fiber	CFS-DID 4"MD	6 (152)
2 (51)	2 (51) Glass Fiber	CFS-DID 6"MD	9 (229)
4 (102)	1 (25) Glass Fiber	CFS-DID 6"MD	9 (229)

System No. F-A-2213

F Ratings — 2 and 3 Hr (See Items 1 and 1A)
T Ratings — 0, 1/4 and 1/2 Hr (See Items 2, 2A and 4)
L Rating At Ambient — Less Than 1 CFM/sq ft (See Item 3A)
L Rating At 400 F — 4 CFM/sq ft (See Item 3A)
W Rating — Class I (See Item 3A)

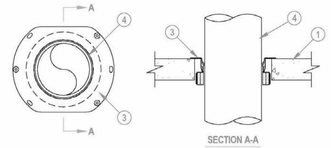

SECTION A-A

1. Floor Assembly — Min 2-1/2 in. (64 mm) to max 8 in. (203 mm) thick reinforced lightweight or normal weight (100-150 pcf or 1600-2400 kg/m³) concrete. When concrete thickness is min 4-1/2 in. (114 mm), F Rating is 3 hr.
1A. Floor Assembly — (Optional, Not Shown) — The fire rated concrete and steel deck floor assembly shall be constructed of the materials and in the manner specified in the individual D700, D800 or D900 Series designs in the UL Fire Resistance Directory and as summarized below:
   A. Concrete — Min 2-1/2 in. (64 mm) to max 8 in. (203 mm) thick reinforced lightweight or normal weight (100-150 pcf or 1600-2400 kg/m³) concrete, as measured over crest of fluted steel deck. When concrete topping thickness is min 4-1/2 in. (114 mm), F Rating is 3 hr.
   B. Steel Floor and Form Units* — Composite or non-composite max 3 in. (76 mm) deep galv steel fluted units as specified in the individual Floor-Ceiling Design.
2. Metallic Sleeve — (Optional, Not Shown) -Nom 4, 5 or 6 in. (102, 127 or 152 mm) diam Schedule 10 (or heavier) steel sleeve cast or grouted into floor assembly, flush with floor surfaces. When metallic sleeve is used, T Rating is 0 Hr.
2A. Sheet Metal Sleeve — (Optional, Not Shown) — Nom 4, 5, 6 or 9 in. (102, 127, 152 or 229 mm) diam, min 26 ga galv steel provided with a 26 ga galv steel square flange spot welded to the sleeve at approx mid-height, or flush with bottom of sleeve in floors, and sized to be a min of 2 in. (51 mm) larger than the sleeve diam. The sleeve is to be cast in place and may extend a max of 4 in. (102 mm) below the bottom of the deck and flush with the top surface of the concrete floor. When sheet metal sleeve is used, T Rating is 0 Hr.
3. Firestop Device* — Drop-in firestop device installed in core-drilled or sleeved opening in concrete floor assembly in accordance with accompanying installation instructions. The firestop device flange should be secured to the top surface of the floor with three 1/4 in. (6 mm) diam by min 1-1/4 in. (32 mm) long steel expansion bolts or screw anchors (installed in a triangular fashion through holes provided). As alternates to the anchors specified above, Hilti 1/4 in. (6 mm) diam by 1-1/4 in. (32 mm) long KWIK-CON II+ concrete screw anchor, Hilti 1/4 in. (6 mm) diam by 1-3/4 in. (45 mm) long KWIK-BOLT 3 steel expansion anchor or Hilti 1/4 in. (6 mm) by 3/4 in. (19 mm) long Metal HIT Anchor may be used. In addition, for nom 2 in. (51 mm), 3 in. (76 mm) and 4 in. (102 mm) firestop devices, four 11/16 in. (18 mm) long Hilti X-GH P18 MX steel fasteners may be installed through the steel flange, two on each side. The firestop devices shall be installed as detailed in the following table:

Core Hole or Sleeve Diam, In. (mm)	Firestop Device	Nom Diam of Through Penetrant, In. (mm)
4 (102)	CFS-DID 2"MD	2 (51) or smaller+
5 (102)	CFS-DID 3"MD	3 (76)
6 (152)	CFS-DID 4"MD	4 (102)
9 (229)	CFS-DID 6"MD	6 (152)

+ For pipe smaller than nom 2 in. (51 mm) diam, Adapter and Top Seal Plug is required to be used.
HILTI CONSTRUCTION CHEMICALS, DIV OF HILTI INC — CFS-DID 2"MD, CFS-DID 3"MD, CFS-DID 4"MD, CFS-DID 6"MD
3A. Firestop Device* - Water Barrier Module — (Optional, Not Shown) - Used in combination with the CFS-DID device and supplied by device manufacturer. Module is threaded onto top of device.
W Rating and L Rating apply only when water barrier module is used.
HILTI CONSTRUCTION CHEMICALS, DIV OF HILTI INC — Water Barrier Module
4. Through Penetrant — One nonmetallic pipe to be installed within the firestop device. Pipe to be rigidly supported on both sides of floor assembly. The following types of pipe may be used:
   A. Polyvinyl Chloride (PVC) Pipe — Nom 6 in. (152 mm) diam (or smaller) Schedule 40 solid core or cellular core PVC pipe for use in closed (process or supply) or vented (drain, waste or vent) piping system.
   B. Acrylonitrile Butadiene Styrene (ABS) Pipe — Nom 6 in. (152 mm) diam (or smaller) Schedule 40 solid core or cellular core ABS pipe for use in closed (process or supply) or vented (drain, waste or vent) piping system.
   C. Chlorinated Polyvinyl Chloride (CPVC) Pipe — Nom 6 in. (152 mm) diam (or smaller) SDR 13.5 CPVC pipe for use in closed (process or supply) or vented (drain, waste or vent) piping system.
   D. Flame Retardant Polypropylene (FRPP) Pipe — Nom 6 in. (152 mm) diam (or smaller) Schedule 40 (or heavier) FRPP pipe for use in closed (process or supply) or vented (drain, waste or vent) piping systems.
T Rating is 1/4 hr when Pipe D is used.
*Bearing the UL Classification Mark

HILTI Firestop Systems

Reproduced by HILTI, Inc. Courtesy of Underwriters Laboratories, Inc. May 18, 2011

System No. F-A-1106

ANSI/UL1479 (ASTM E814)	CAN/ULC S115
F Rating - 2 Hr	F Rating - 2 Hr
T Rating - 2 Hr	FT Rating - 2 Hr
L Rating At Ambient - Less Than 1 CFM/sq ft	FH Rating - 2 Hr
L Rating At 400 F - 4 CFM/sq ft	FTH Rating - 2 Hr
W Rating - Class 1 (See Item 3B)	L Rating At Ambient - Less Than 1 CFM/sq ft
	L Rating At 400 F - 4 CFM/sq ft

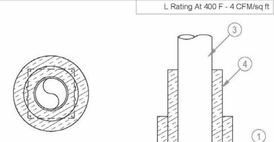

SECTION A-A

1. Floor Assembly — Min 4-1/2 in. (114 mm) thick reinforced lightweight or normal weight (100-150 pcf or 1600-2400 kg/m³) concrete. As an alternate, any min 2 hr fire rated D700, D800 or D900 Series Floor-Ceiling Design in the UL Fire Resistance Directory having a min 2-1/2 in. (64 mm) thickness of lightweight or normal weight (100-150 pcf or 1600-2400 kg/m³) concrete topping over the steel deck may be used.
2. Firestop Device* — Cast in place firestop device permanently embedded during concrete placement or grouted in concrete floor assembly in accordance with accompanying installation instructions. Device sized to nom diam of penetrant. Device is to be trimmed flush with the top surface of the floor.
HILTI CONSTRUCTION CHEMICALS, DIV OF HILTI INC — CP 680-P 2", CP 680-P 3", CP 680-P 4", CP 680-P 6" Cast-In Firestop Device.
2A. Firestop Device* — Water Barrier Module — (Optional, Not Shown) - Used in combination with the CP 680-P device to achieve a W Rating. Module is threaded onto top of device. W Rating applies only when water barrier module is used and pipe is installed from bottom of device.
HILTI CONSTRUCTION CHEMICALS, DIV OF HILTI INC — Water Barrier Module
3. Through-Penetrant — One metallic pipe installed concentrically or eccentrically within opening. Penetrant to be rigidly supported on both sides of floor assembly. The following types and sizes of penetrants may be used:
   A. Steel Pipe — Nom 6 in. (152 mm) diam (or smaller) Schedule 40 (or heavier) steel pipe.
   B. Iron Pipe — Nom 6 in. (152 mm) diam (or smaller) cast or ductile iron pipe.
   C. Iron Pipe — Nom 4 in. (102 mm) diam (or smaller) steel electrical metallic tubing or nom 6 in. (152 mm) diam (or smaller) rigid steel conduit.
4. Duct Wrap Material* — Encapsulated duct wrap tightly wrapped around penetrant to extend 24 in. (610 mm) above the floor for penetrants of nom 4 in. (102 mm) diam or smaller, and 36 in. (914 mm) above floor for penetrants greater than a nom 4 in. (102 mm) diam. An additional layer of encapsulated duct wrap tightly wrapped around the first layer of duct wrap to extend 12 in. (305 mm) (914 mm) above floor. All longitudinal seams of both layers of duct wrap and joints between layers of duct wrap are sealed with foil tape. One of the following types and thicknesses of duct wrap material shall be used.
   A. Nom 2 in. (51 mm)) or 1-1/2 in. (38 mm) thick encapsulated duct wrap.
   UNIFRAX I L L C — FyreWrap 2.0 Duct Insulation or FyreWrap 1.5 Duct Insulation
   B. Nom 1-1/2 in. (38 mm) thick encapsulated duct wrap.
   THERMAL CERAMICS INC — FireMaster FastWrap XL Duct Insulation
*Bearing the UL Classification Mark

HILTI Firestop Systems

Reproduced by HILTI, Inc. Courtesy of Underwriters Laboratories, Inc. September 02, 2011

System No. F-A-5046 (cont.)

ANSI/UL1479 (ASTM E814)	CAN/ULC S115
F Ratings — 2 and 3 Hr (See Items 1 and 1A)	F Ratings — 2 and 3 Hr (See Items 1 and 1A)
T Ratings — 0 and 1/2 Hr (See Item 2)	FT Ratings — 0 and 1/2 Hr (See Item 2)
	FH Ratings — 2 and 3 Hr (See Items 1 and 1A)
	FTH Ratings — 0 and 1/2 Hr (See Item 2)

HILTI CONSTRUCTION CHEMICALS, DIV OF HILTI INC — CFS-DID 2"MD, CFS-DID 3"MD, CFS-DID 4"MD, CFS-DID 6"MD
4. Through Penetrant — One metallic pipe or tubing to be installed within the firestop device. Pipe or tubing to be rigidly supported on both sides of floor assembly. The following types of pipe or tubing may be used:
   A. Steel Pipe — Nom 4 in. (102 mm) diam (or smaller) Schedule 10 (or heavier) steel pipe.
   B. Iron Pipe — Nom 4 in. (102 mm) diam (or smaller) cast or ductile pipe.
   C. Copper Tubing — Nom 4 in. (102 mm) diam (or smaller) Type L (or heavier) copper tubing.
   D. Copper Pipe — Nom 4 in. (102 mm) diam (or smaller) Regular (or heavier) copper pipe.
5. Tube Insulation - Plastiso+ — Nom 3/4 or 1 in. (19 or 25 mm) thick acrylonitrile butadiene/polyvinyl chloride (AB/PVC) flexible foam furnished in the form of tubing.
   See Plastiso+ (QMFZ2) Category in the Plastics Recognized Component Directory for names of manufacturers. Any Recognized Component tube insulation material meeting the above specifications and having a UL94 Flammability Classification of 94-5VA may be used.
5A. Pipe Covering* — Nom 1, 1-1/2 or 2 in. (25, 38 or 51 mm) thick hollow cylindrical heavy density (min 3.5 pcf or 56 kg/m³) glass fiber units, jacketed on the outside with an all service jacket. Longitudinal joints sealed with metal fasteners or factory-applied SSL tape. Transverse joints secured with metal fasteners or with butt tape supplied with the product.
   See Pipe and Equipment Covering-Materials (BRGU) category in the Building Materials Directory for names of manufacturers. Any pipe covering material meeting the above specifications and bearing the UL Classification Marking with a Flame Spread Index of 25 or less and a Smoke Developed Index of 50 or less may be used.
*Bearing the UL Classification Mark

HILTI Firestop Systems

Reproduced by HILTI, Inc. Courtesy of Underwriters Laboratories, Inc. December 21, 2011

System No. W-L-7130

F Ratings – 1 and 2 Hr (See Item 1)
T Rating – 0 Hr

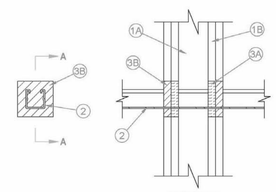

SECTION A-A

1. Wall Assembly -- The 1 or 2 hr fire-rated gypsum board/stud wall assembly shall be constructed of the materials and in the manner specified in the individual U300, U400 or V400 Series Wall and Partition Designs in the UL Fire Resistance Directory and shall include the following construction features:
   A. Studs -- Wall framing may consist of either wood studs or steel channel studs. Wood studs to consist of nom 2 by 4 in. (51 by 102 mm) lumber spaced max 16 in. (406 mm) OC. Steel studs to be min 2-1/2 in. (64 mm) wide and spaced max 24 in. (610 mm) OC.
   B. Gypsum Board* -- One or two layers of gypsum board, as specified in the individual Wall and Partition Design. Max area of rectangular opening is 15 sq in. (96 cm2) with max dimension of 5 in. (127 mm). In lieu of rectangular opening max diam of circular opening is 3 in. (76 mm).
   The F Rating of the firestop system is equal to the hourly fire rating of the wall assembly.
2. Through Penetrants -- One metallic strut, cable, rod or angle service support to be installed within the firestop system. An annular space of min 1/8 in. (3 mm) to max 7/8 in. (22 mm) is required within the firestop system. Strut, cable, rod or angle service support to be rigidly supported on both sides of floor or wall assembly. The strut, cable, rod or angle service support may be installed at an angle not greater than 45 degrees from the perpendicular. The following types and sizes of metallic strut, cable, rod or angle service support may be used:
   A. Steel Strut -- Max 1-5/8 by 1-5/8 in. (41 by 41 mm) channel strut formed from min 0.105 in. (2.7 mm) thick galv or painted steel.
   B. Steel Strut -- Max 3-1/4 by 1-5/8 in. (83 by 41 mm) H strut formed from min 0.105 in. (2.7 mm) thick galv or painted steel.
   C. Cable -- Max 3/8 in. (9.5 mm) diam unjacketed galv steel cable.
   D. Threaded Rod -- Max 1 in. (25 mm) diam galv steel threaded rod.
   E. Steel Angle -- 2 by 2 by 1/8 in. (51 by 51 by 3 mm) thick steel angle.
3. Firestop System -- The firestop system shall consist of the following:
   A. Packing Material -- Min 1/2 in. (13 mm) thickness of min 4 pcf (64 kg/m3) mineral wool batt insulation firmly packed into opening as a permanent form. Packing material to be located between penetrant and periphery of opening, and within channels of struts. Packing material to be recessed from both surfaces of wall to accommodate the required thickness of fill material. When through penetrant is oriented perpendicular to wall or when Type FS-ONE Sealant (Item 3B) is used, packing material is optional.
   B. Fill, Void or Cavity Material* - Sealant -- Min 5/8 in. (16 mm) thickness of fill material applied within the annulus and within the channel struts, flush with both surfaces of wall.
   HILTI CONSTRUCTION CHEMICALS, DIV OF HILTI INC -- FS-ONE Sealant, CP 606 Sealant
*Bearing the UL Classification Mark

HILTI Firestop Systems

Reproduced by HILTI, Inc. Courtesy of Underwriters Laboratories, Inc. July 06, 2005

System No. F-A-1128

ANSI/UL1479 (ASTM E814)	CAN/ULC S115
F Ratings — 2 and 3 Hr (See Items 1 and 1A)	F Ratings — 2 and 3 Hr (See Items 1 and 1A)
T Ratings — 0 and 1/4 Hr (See Item 2)	FT Ratings — 0 and 1/4 Hr (See Item 2)
L Rating At Ambient — Less Than 1 CFM/sq ft (See Item 3A)	FH Ratings — 2 and 3 Hr (See Items 1 and 1A)
L Rating At 400 F — Less Than 1 CFM/sq ft (See Item 3A)	FTH Ratings — 0 and 1/4 Hr (See Item 2)
W Rating — Class 1 (See Item 3A)	L Rating At Ambient — Less Than 1 CFM/sq ft (See Item 3A)
	L Rating At 400 F — Less Than 1 CFM/sq ft (See Item 3A)

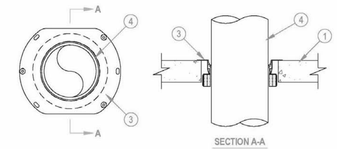

SECTION A-A

1. Floor Assembly — Min 2-1/2 in. (64 mm) to max 8 in. (203 mm) thick reinforced lightweight or normal weight (100-150 pcf or 1600-2400 kg/m³) concrete. When concrete thickness is min 4-1/2 in. (114 mm), the F and FH Ratings are 3 hr.
1A. Floor Assembly — (Optional, Not Shown) — The fire rated concrete and steel deck floor assembly shall be constructed of the materials and in the manner specified in the individual D700, D800 or D900 Series designs in the UL Fire Resistance Directory and as summarized below:
   A. Concrete — Min 2-1/2 in. (64 mm) to max 8 in. (203 mm) thick reinforced lightweight or normal weight (100-150 pcf or 1600-2400 kg/m³) concrete, as measured over crest of fluted steel deck. When concrete topping thickness is min 4-1/2 in. (114 mm), F and FH Ratings are 3 hr.
   B. Steel Floor and Form Units* — Composite or non-composite max 3 in. (76 mm) deep galv steel fluted units as specified in the individual Floor-Ceiling Design.
2. Metallic Sleeve — (Optional, Not Shown) - Nom 4, 5 or 6 in. (102, 127 or 152 mm) diam Schedule 10 (or heavier) steel sleeve cast or grouted into floor assembly, flush with floor surfaces. When metallic sleeve is used, the T, FT and FTH Ratings are 0 Hr.
2A. Sheet Metal Sleeve — (Optional, Not Shown) - Nom 4, 5, 6 or 9 in. (102, 127, 152 or 229 mm) diam, min 26 ga galv steel provided with a 26 ga galv steel square flange spot welded to the sleeve at approx mid-height, or flush with bottom of sleeve in floors, and sized to be a min of 2 in. (51 mm) larger than the sleeve diam. The sleeve is to be cast in place and may extend a max of 4 in. (102 mm) below the bottom of the deck and flush with the top surface of the concrete floor. When sheet metal sleeve is used, the T, FT and FTH Ratings are 0 Hr.
3. Firestop Device* — Drop-in firestop device installed in core-drilled or sleeved opening in concrete floor assembly in accordance with accompanying installation instructions. The firestop device flange should be secured to the top surface of the floor with three 1/4 in. (6 mm) diam by min 1-1/4 in. (32 mm) long steel expansion bolts or screw anchors (installed in a triangular fashion through holes provided). As alternates to the anchors specified above, Hilti 1/4 in. (6 mm) diam by 1-1/4 in. (32 mm) long KWIK-CON II+ concrete screw anchor, Hilti 1/4 in. (6 mm) diam by 1-3/4 in. (45 mm) long KWIK-BOLT 3 steel expansion anchor or Hilti 1/4 in. (6 mm) by 3/4 in. (19 mm) long Metal HIT Anchor may be used. In addition, for nom 2 in. (51 mm), 3 in. (76 mm) and 4 in. (102 mm) firestop devices, four 11/16 in. (18 mm) long Hilti X-GH P18 MX steel fasteners may be installed through the steel flange, two on each side. The firestop devices shall be installed as detailed in the following table:

Core Hole or Sleeve Diam, In. (mm)	Firestop Device	Nom Diam of Through Penetrant, In. (mm)
4 (102)	CFS-DID 2"MD	2 (51) or smaller+
5 (102)	CFS-DID 3"MD	3 (76)
6 (152)	CFS-DID 4"MD	4 (102)
9 (229)	CFS-DID 6"MD	6 (152)

+ For pipe smaller than nom 2 in. (51 mm) diam, Adapter and Top Seal Plug is required to be used.
HILTI CONSTRUCTION CHEMICALS, DIV OF HILTI INC — CFS-DID 2"MD, CFS-DID 3"MD, CFS-DID 4"MD, CFS-DID 6"MD
3A. Firestop Device* - Water Barrier Module — (Optional, Not Shown) - Used in combination with the CFS-DID device and supplied by device manufacturer. Module is threaded onto top of device.
W Rating and L Rating apply only when water barrier module is used.
HILTI CONSTRUCTION CHEMICALS, DIV OF HILTI INC — Water Barrier Module
4. Through Penetrant — One metallic pipe, conduit or tubing to be installed within the firestop device. Pipe, conduit or tubing to be rigidly supported on both sides of floor assembly. The following types of pipe, conduit or tubing may be used:
   A. Steel Pipe — Nom 6 in. (152 mm) diam (or smaller) Schedule 10 (or heavier) steel pipe.
   B. Iron Pipe — Nom 6 in. (152 mm) diam (or smaller) cast or ductile iron pipe.
   C. Conduit — Nom 6 in. (152 mm) diam (or smaller) rigid steel conduit.
   D. Conduit — Nom 4 in. (102 mm) diam (or smaller) steel electrical metallic tubing.
   E. Copper Tubing — Nom 6 in. (152 mm) diam (or smaller) Type L (or heavier) copper tubing.
   F. Copper Pipe — Nom 6 in. (152 mm) diam (or smaller) Regular) or heavier copper pipe.
*Bearing the UL Classification Mark

HILTI Firestop Systems

Reproduced by HILTI, Inc. Courtesy of Underwriters Laboratories, Inc. December 21, 2011

CRSA

649 E. South Temple
Salt Lake City, UT 84102
801.355.5915

MWL

11798 N. Lakeridge Pkwy.
Ashland, VA 23005
804-228-7473

State of Utah
Department of Administrative Services
Division of Facilities Construction & Management
4110 State Office Building
Salt Lake City, Utah 84114
Phone: (801) 538 - 3018
Fax: (801) 538 - 3267

DIVISION OF FACILITIES CONSTRUCTION AND MANAGEMENT
REVIEWED FOR CODE COMPLIANCE
SIGNATURE: Ernie Gelb
DATE: 08-05-2014

STATE OF UTAH
#134096
MEHRDAD SAMII
LICENSED ARCHITECT
08-28-2014
ARCHITECT-ENGINEER STAMP

Unified State Laboratory Module 2

4451 South 2700 West, Taylorsville, UT 84118

DFCM #: 13020300

Project #: B13-024

DATE:	ISSUE TYPE:
APRIL 21, 2014	BID SET
CHECKED BY	J. NIELSEN
DRAWN BY	F. PITORE

UL DETAILS

GF016

VOLUME 1

C:\Users\fernando\Documents_A_13024_Modli_2013_fernando.rvt
7/14/2014 11:33:03 PM

ONLINE CERTIFICATIONS DIRECTORY

System No. HW-D-0060

XHBN.HW-D-0060
Joint Systems

Page Bottom

Design/System/Construction/Assembly Usage Disclaimer

- Authorities Having Jurisdiction should be consulted in all cases as to the particular requirements covering the installation and use of UL Certified products, equipment, system, devices, and materials.
- Authorities Having Jurisdiction should be consulted before construction.
- Fire resistance assemblies and products are developed by the design submitter and have been investigated by UL for compliance with applicable requirements. The published information cannot always address every construction nuance encountered in the field.
- When field issues arise, it is recommended the first contact for assistance be the technical service staff provided by the product manufacturer noted for the design. Users of fire resistance assemblies are advised to consult the general Guide Information for each product category and each group of assemblies. The Guide Information includes specifics concerning alternate materials and alternate methods of construction.
- Only products which bear UL's Mark are considered Certified.

XHBN - Joint Systems

XHBN7 - Joint Systems Certified for Canada

See General Information for Joint Systems

See General Information for Joint Systems Certified for Canada

System No. HW-D-0060

February 20, 2014

ANSI/UL2079	CAN/ULC S115
Assembly Ratings — 1, 2 and 3 Hr (See Item 2)	F Ratings — 1, 2 and 3 Hr (See Item 2)
Nominal Joint Width - 1 In.	FT Ratings — 1, 2 and 3 Hr (See Item 2)
Class II or III Movement Capabilities — 100% Compression or Extension	FH Ratings — 1, 2 and 3 Hr (See Item 2)
	FTH Ratings — 1, 2 and 3 Hr (See Item 2)
	Nominal Joint Width - 1 In.
	Class II or III Movement Capabilities — 100% Compression or Extension

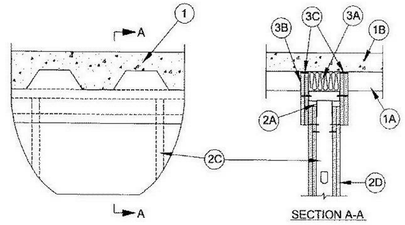

CONFIGURATION A

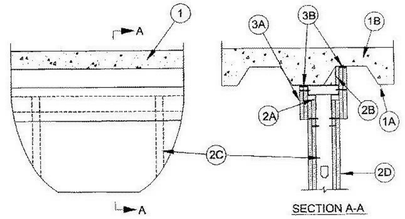

CONFIGURATION B

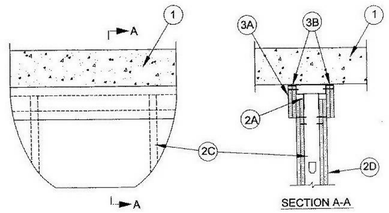

CONFIGURATION C

1. **Floor Assembly** — The fire-rated fluted steel deck/concrete floor assembly shall be constructed of the materials and in the manner described in the individual Floor-Ceiling Design in the UL Fire Resistance Directory. The hourly fire rating of the floor assembly shall be equal to or greater than the hourly fire rating of the wall assembly. The floor assembly shall include the following construction features:

A. **Steel Floor and Form Units*** — Max 3 in. (76 mm) deep galv fluted floor units.

B. **Concrete** — Min 2-1/2 in. (64 mm) thick reinforced (100-150 pcf or 1600-2400 kg/m^3) concrete, as measured from the top plane of the floor units.

1A. **Roof Assembly** — As an alternate to Item 1, the fire-rated roof assembly shall be constructed of the materials and in the manner described in the individual P700, P800 or P900 series Roof-Ceiling Designs in the UL Fire Resistance Directory and shall contain max 3 in. (76 mm) deep galv steel fluted roof units. The hourly fire rating of the roof assembly shall be equal to or greater than the hourly fire rating of the wall assembly. In the case of spray-applied protection materials on the steel roof units, the joint system shall be installed prior to the spray-applied protection material.

1B. **Floor Assembly** — As an alternate to Item 1, min 4-1/2 in. (114 mm) thick reinforced lightweight or normal weight (100-150 pcf or 1600-2400 kg/m^3) structural concrete or any min 6 in. (152 mm) thick UL Classified hollow-core **Precast Concrete Units***.

See **Precast Concrete Units** (QTVU) category in the Fire Resistance Directory for names of manufacturers.

2. **Wall Assembly** — The 1, 2 or 3 hr fire-rated gypsum board/steel stud wall assembly shall be constructed of the materials and in the manner described in the individual U400, V400 or W400-Series Wall and Partition Design in the UL Fire Resistance Directory and shall include the following construction features:

A. **Light Gauge Framing* - Deflection Trak** — Deflection trak of wall assembly shall consist of min No. 25 gauge galv steel channels sized to accommodate steel studs (Item 2C) and with offset legs to accommodate wall cladding (Item 3A). Deflection trak installed parallel or perpendicular to the floor units. When installed perpendicular (Configuration A), min No. 25 gauge deflection trak secured on both sides to valley of floor units with 1-1/2 in. (38 mm) long welds spaced max 12 in. (305 mm) OC. Min No. 20 gauge deflection trak may be secured with steel fasteners spaced 12 in. (305 mm) OC. When installed parallel (Configuration B), min No. 25 gauge deflection trak secured on one side to valley of floor units with 1-1/2 in. (38 mm) long welds spaced 12 in. (305 mm) OC. Min No. 20 gauge deflection trak may be secured with steel fasteners spaced max 12 in. (305 mm) OC. The other side of the deflection trak is secured to Z-Furring clips (Item 2B) with #6 No. 8 by 1/2 in. (13 mm) long tec screws. On concrete floor (Configuration C), min No. 20 gauge deflection trak attached to concrete at ceiling with steel fasteners spaced max 12 in. (305 mm) OC.

FIRE TRAK CORP — Shadowline

B. **Studs** — Steel studs to be min 2-1/2 in. (64 mm) wide and as specified in the individual Wall and Partition Design in the UL Fire Resistance Directory. Studs cut 1-1/2 in. (38 mm) less in length than the assembly height with bottom nesting in and resting on floor runner and with top nesting in ceiling runner without attachment. Stud spacing not to exceed 24 in. (610 mm) OC.

D. **Gypsum Board*** — Gypsum board sheets installed and attached to studs and runners as specified in the individual Wall and Partition Design in the UL Fire Resistance Directory, except that a nominal 1 in. (25 mm) gap shall be maintained between top of the gypsum board and the bottom flange of the deflection trak. Top row of screws shall be installed into the studs 3 in. (76 mm) below the top edge of the gypsum board sheets.

The hourly assembly rating of the joint system is equal to the fire rating of the wall.

Firestop Configuration A

3. **Joint System — Max separation between bottom flange of the deflection trak and top of wallboard (at the time of installation of the joint system) is 1 in. (25 mm). The joint system is designed to accommodate a max 100 percent compression or extension from its installed width.** The joint system consists of packing material (Item 3A), wall cladding (Item 3B) and a fill material (Item 3C) as follows:

A. **Packing Material** — Min 4 pcf (64 kg/m^3) density mineral wool batt insulation cut to the shape of the fluted deck, 25 percent larger than the area of the flutes and compressed into the flutes of the steel floor units above the ceiling runner as a permanent form.

B. **Wall Cladding** — Strips of the gypsum board material cut to the contour of the steel floor units and attached to the deflection trak. The number of layers, board type and thickness and fastener type shall be as specified for the gypsum board in the individual Wall and Partition Design in the UL Fire Resistance Directory. Fasteners shall be max spaced 3 in. (76 mm) OC. The top of the wall cladding shall be recessed min 1/8 in. (3.2 mm) to max 1/2 in. (13 mm) from the steel floor units and overlap the gypsum board 4 in. (102 mm).

C. **Fill, Void or Cavity Material*** — Full depth of fill material installed on each side of the wall between the top of the wall cladding and the surface of the steel floor units, flush with each surface of the cladding.

A/D FIRE PROTECTION SYSTEMS INC — A/D FireBarrier Seal N/S, A/D FireBarrier Silicone

DAP PRODUCTS INC — DAP Firestop Sealant

EGS NELSON FIRESTOP — ES 1399 Sealant

HILTI CONSTRUCTION CHEMICALS, DIV OF HILTI INC — FS611A or FS-ONE Sealant

JOHNS MANVILLE INTERNATIONAL INC — Firetemp CI

3M COMPANY — FB 1000NS, FB 2000, FB 2000+, FD-150+, CP 25 WB+

NATIONAL GYPSUM CO — FS-90

NUCO INC — Self Seal GG-200

PASSIVE FIRE PROTECTION PARTNERS — 4100NS, 4800DW

RECTORSEAL — Metacaulk 835+, Metacaulk 1000, Biostop 500+Caulk, Biotherm 100, FS1900, FS4000

SPECIFIED TECHNOLOGIES INC — SpecSeal ES Sealant

TREMCO INC — TREMstop Acrylic

UNITED STATES GYPSUM CO — FC, RFC

RECTORSEAL — FS3000, FS3001, FS3005

Firestop Configuration B

3. **Joint System — Max separation between bottom flange of the deflection trak and top of wallboard (at the time of installation of the joint system) is 1 in. (25 mm). The joint system is designed to accommodate a max 100 percent compression or extension from its installed width.** The joint system consists of packing material (Item 3A), wall cladding (Item 3B) and a fill material (Item 3C) as follows:

A. **Wall Cladding** — Strips of the gypsum board material attached to the deflection trak. The number of layers, board type and thickness and fastener type shall be as specified for the gypsum board in the individual Wall and Partition Design in the UL Fire Resistance Directory. Fasteners shall be max spaced 3 in. (76 mm) OC. The top of the wall cladding shall be recessed min 1/8 in. (3.2 mm) to max 1/2 in. (13 mm) from the steel floor units and overlap the gypsum board 4 in. (102 mm).

B. **Fill, Void or Cavity Material*** — Full depth of fill material installed on each side of the wall between the top of the wall cladding and the surface of the steel floor units, flush with each surface of the cladding.

A/D FIRE PROTECTION SYSTEMS INC — A/D FireBarrier Seal N/S, A/D FireBarrier Silicone

DAP PRODUCTS INC — DAP Firestop Sealant

EGS NELSON FIRESTOP — ES 1399 Sealant

HILTI CONSTRUCTION CHEMICALS, DIV OF HILTI INC — FS611A or FS-ONE Sealant

JOHNS MANVILLE INTERNATIONAL INC — Firetemp CI

3M COMPANY — FB 1000NS, FB 2000, FB 2000+, FD-150+, CP 25 WB+

NATIONAL GYPSUM CO — FS-90

NUCO INC — Self Seal GG-200

PASSIVE FIRE PROTECTION PARTNERS — 4100NS, 4800DW

RECTORSEAL — Metacaulk 835+, Metacaulk 1000, Biostop 500+Caulk, Biotherm 100, FS1900, FS4000

SPECIFIED TECHNOLOGIES INC — SpecSeal ES Sealant

TREMCO INC — TREMstop Acrylic

UNITED STATES GYPSUM CO — FC, RFC

Firestop Configuration C

3. **Joint System — Max separation between bottom flange of the deflection trak and top of wallboard (at the time of installation of the joint system) is 1 in. (25 mm). The joint system is designed to accommodate a max 100 percent compression or extension from its installed width.** The joint system consists of packing material (Item 3A), wall cladding (Item 3B) and a fill material (Item 3C) as follows:

A. **Wall Cladding** — Strips of the gypsum board material attached to the deflection trak. The number of layers, board type and thickness and fastener type shall be as specified for the gypsum board in the individual Wall and Partition Design in the UL Fire Resistance Directory. Fasteners shall be max spaced 3 in. (76 mm) OC. The top of the wall cladding shall be recessed min 1/8 in. (3.2 mm) to max 1/2 in. (13 mm) from the bottom of the concrete floor and overlap the gypsum board 4 in. (102 mm).

B. **Fill, Void or Cavity Material*** — Full depth of fill material installed on each side of the wall between the top of the wall cladding and the bottom of the concrete floor, flush with each surface of the cladding.

A/D FIRE PROTECTION SYSTEMS INC — A/D FireBarrier Seal N/S, A/D FireBarrier Silicone

DAP PRODUCTS INC — DAP Firestop Sealant

EGS NELSON FIRESTOP — ES 1399 Sealant

HILTI CONSTRUCTION CHEMICALS, DIV OF HILTI INC — FS611A or FS-ONE Sealant

JOHNS MANVILLE INTERNATIONAL INC — Firetemp CI

3M COMPANY — FB 1000NS, FB 2000, FB 2000+, FD-150+, CP 25 WB+

NATIONAL GYPSUM CO — FS-90

NUCO INC — Self Seal GG-200

PASSIVE FIRE PROTECTION PARTNERS — 4100NS, 4800DW

RECTORSEAL — Metacaulk 835+, Metacaulk 1000, Biostop 500+Caulk, Biotherm 100, FS1900, FS4000

SPECIFIED TECHNOLOGIES INC — SpecSeal ES Sealant

TREMCO INC — TREMstop Acrylic

UNITED STATES GYPSUM CO — FC, RFC

*Bearing the UL Classification Mark

Last Updated on 2014-02-20

CRSA

649 E. South Temple
Salt Lake City, UT 84102
801.355.5915

MWL

11798 N. Lakeridge Pkwy.
Ashland, VA 23005
804-228-7473

State of Utah
Department of Administrative Services
DFCM
Division of Facilities Construction & Management
4110 State Office Building
Salt Lake City, Utah 84114
Phone: (801) 538 - 3018
Fax: (801) 538 - 3267

DIVISION OF FACILITIES CONSTRUCTION AND MANAGEMENT
REVIEWED FOR CODE COMPLIANCE
SIGNATURE: Ernie Calle
DATE: 08-05-2014

STATE OF UTAH
#134096
MEHRDAD SAMIE
LICENSED ARCHITECT
04-28-2014
ARCHITECT-ENGINEER STAMP

Unified State Laboratory Module 2

4451 South 2700 West, Taylorsville, UT 84118

DFCM #: 13020300

Project #: B13-024

DATE:	ISSUE TYPE:
APRIL 21, 2014	BID SET
CHECKED BY	J. NIELSEN
DRAWN BY	F. PITORE

UL DETAILS

GF017

VOLUME 1

C:\Users\fernando\Documents_A_13024_Modli_2013_fernando.rvt
7/14/2014 1:13:14 PM

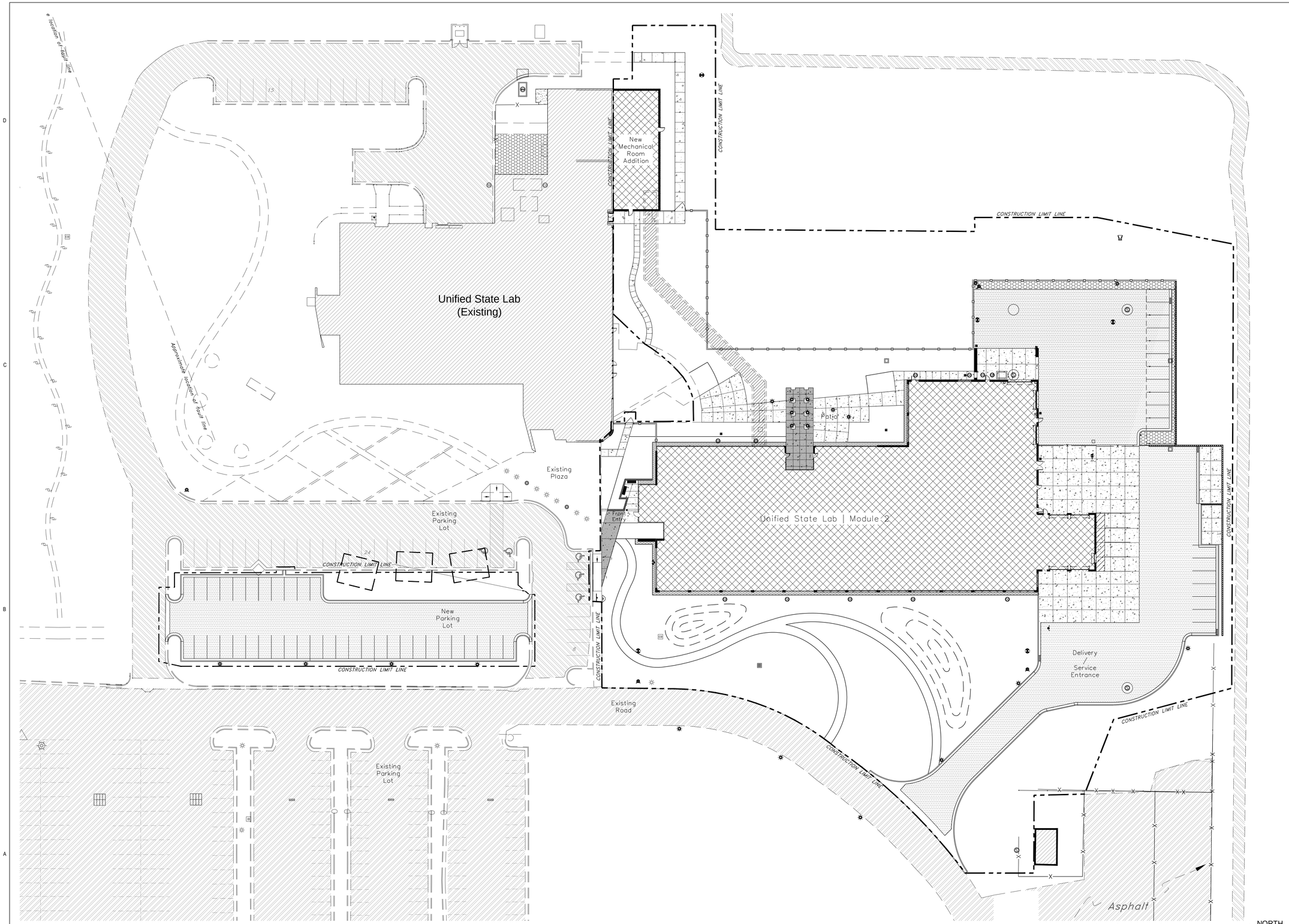

1 LS100 SITE PLAN
1" = 30'-0"

CRSA
649 E. South Temple
Salt Lake City, UT 84102
801.355.5915

MWL
11798 N. Lakeridge Pkwy.
Ashland, VA 23005
804-228-7473

State of Utah
Department of Administrative Services

Division of Facilities
Construction & Management
4110 State Office Building
Salt Lake City, Utah 84114
Phone: (801) 538 - 3018
Fax: (801) 538 - 3267

DIVISION OF FACILITIES CONSTRUCTION AND MANAGEMENT
REVIEWED FOR CODE COMPLIANCE
SIGNATURE:
DATE: 08-05-2014

REGISTERED LANDSCAPE ARCHITECT
JOHN KELLY GILLMAN
#4812634-5301
STATE OF UTAH
01-28-2014
ARCHITECT-ENGINEER STAMP

Unified State Laboratory Module 2

4451 South 2700 West,
Taylorsville, UT 84118

DFCM #:	13020300
Project #:	B13-024

DATE:	ISSUE TYPE:
April 21, 2014	BID SET

CHECKED BY	KG
DRAWN BY	DL

SITE PLAN

LS100

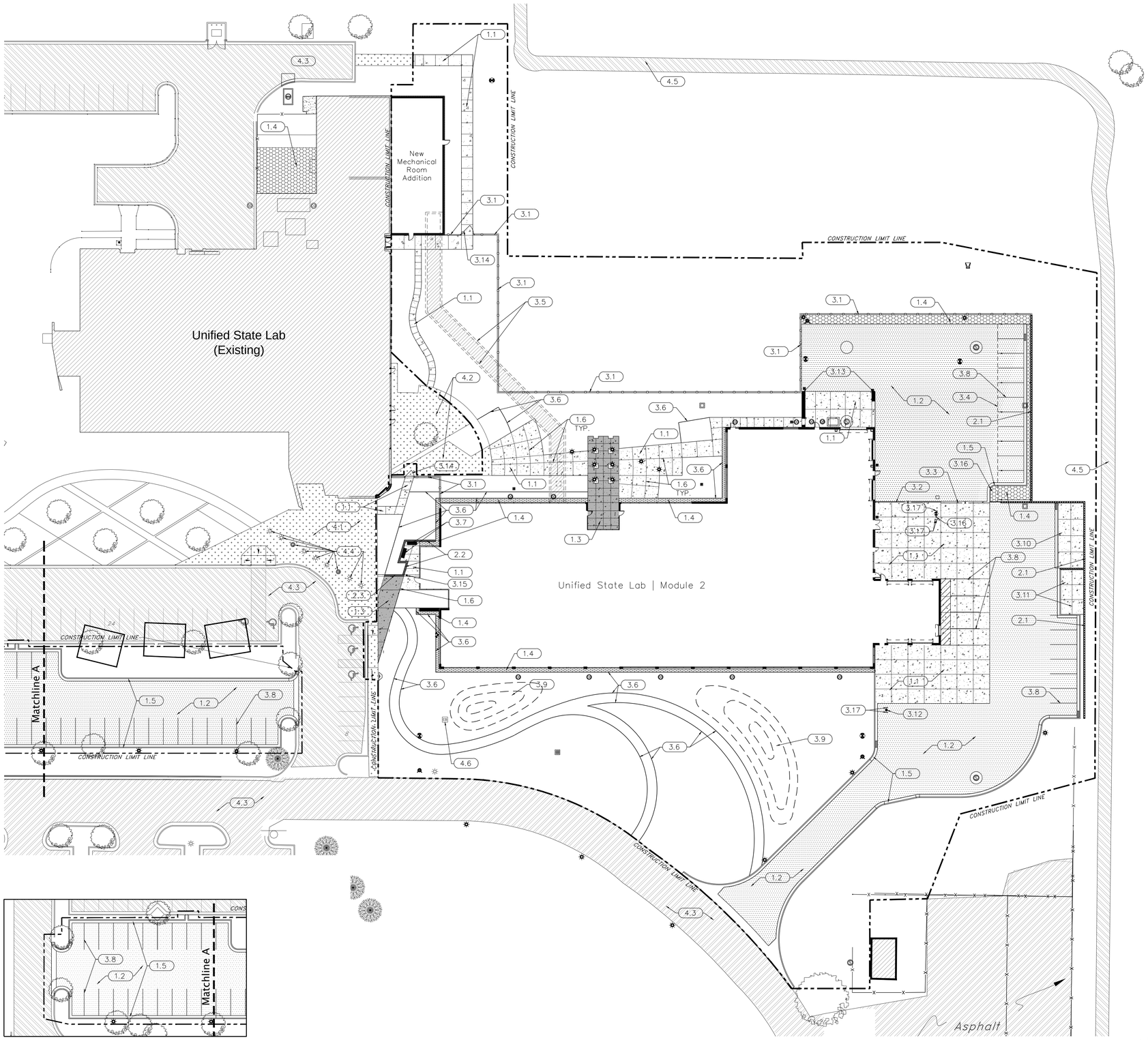

1 LS101 SITE CALLOUT PLAN
1" = 30'-0"

SHEET INFORMATION

#	CALLOUT	DETAIL/SHEET
1.0	PAVEMENTS AND WALKS	
1.1	Concrete Paving	See Civil Plans
1.2	Asphalt Paving	See Civil Plans
1.3	Colored Concrete Paving	See Civil Plans
1.4	Rock Mulch	See Civil Plans
1.5	Concrete Curb and Gutter	See Civil Plans
1.6	Concrete Paving Joints, typ.	See Civil Plans
2.0	SITE WALLS	
2.1	Wall #1	See Architecture Plans
2.2	Wall #2	3-7 / LS600
2.3	Sign Wall	6,8-9 / LS600
3.0	SITE ELEMENTS	
3.1	New Fence w/ Concrete Mow Curb (to match existing)	1-7 / LS601
3.2	Fence	See Civil Plans
3.3	Fence Sliding Roll Gate	See Civil Plans
3.4	Covered Parking	See Architecture Plans
3.5	New Utility Tunnel Outline	See Mechanical Plans
3.6	Metal Landscape Edging	1 / LS600
3.7	Seat Bench	10 / LS600
3.8	Parking Lot Line Striping	See Civil Plans
3.9	Landscape Berm	See Civil Plans
3.10	Emergency Generator	See Electrical Plans
3.11	Transformer	See Electrical Plans
3.12	Push-To-Talk Pedestal	See Electrical Plans
3.13	Building Column	See Architecture Plans
3.14	Fence Gate	4-5/ LS601
3.15	ADA operator/Card Reader/Knox Box Bollard	See Electrical Plans
3.16	Card Reader Pedestal	See Electrical Plans
3.17	Bollard	See Civil Plans
4.0	EXISTING SITE ELEMENTS (TO REMAIN)	
4.1	Existing Concrete Paving	
4.2	Existing Concrete Courtyard	
4.3	Existing Ashpalt Paving	
4.4	Existing Bollards	
4.5	Existing Trail	
4.6	Existing Transformer	

LEGEND:

- Proposed Site Element
- Existing Site Element (To Remain)
- Existing Building
- Proposed Construction Limit Line
- Existing Tree (to remain)
- Existing Concrete Paving (to remain)
- Existing Asphalt Paving (to remain)
- Proposed Concrete Paving – Standard Color
- Proposed Concrete Colored Paving
- Proposed Asphalt Paving
- Proposed Rock Mulch

CRSA
649 E. South Temple
Salt Lake City, UT 84102
801.355.5915

MWL
11798 N. Lakeridge Pkwy.
Ashland, VA 23005
804-228-7473

State of Utah
Department of Administrative Services
Division of Facilities Construction & Management
4110 State Office Building
Salt Lake City, Utah 84114
Phone: (801) 538 - 3018
Fax: (801) 538 - 3267

DIVISION OF FACILITIES CONSTRUCTION AND MANAGEMENT
REVIEWED FOR CODE COMPLIANCE
SIGNATURE: Ernie Gelb
DATE: 08-05-2014

REGISTERED LANDSCAPE ARCHITECT
JOHN KELLY GILLMAN
04012634-5301
STATE OF UTAH

01-28-2014
ARCHITECT-ENGINEER STAMP

Unified State Laboratory Module 2

4451 South 2700 West,
Taylorsville, UT 84118

DFCM #: 13020300
Project #: B13-024

DATE:	ISSUE TYPE:
April 21, 2014	BID SET
CHECKED BY	KG
DRAWN BY	DL

SITE CALLOUT PLAN

LS101

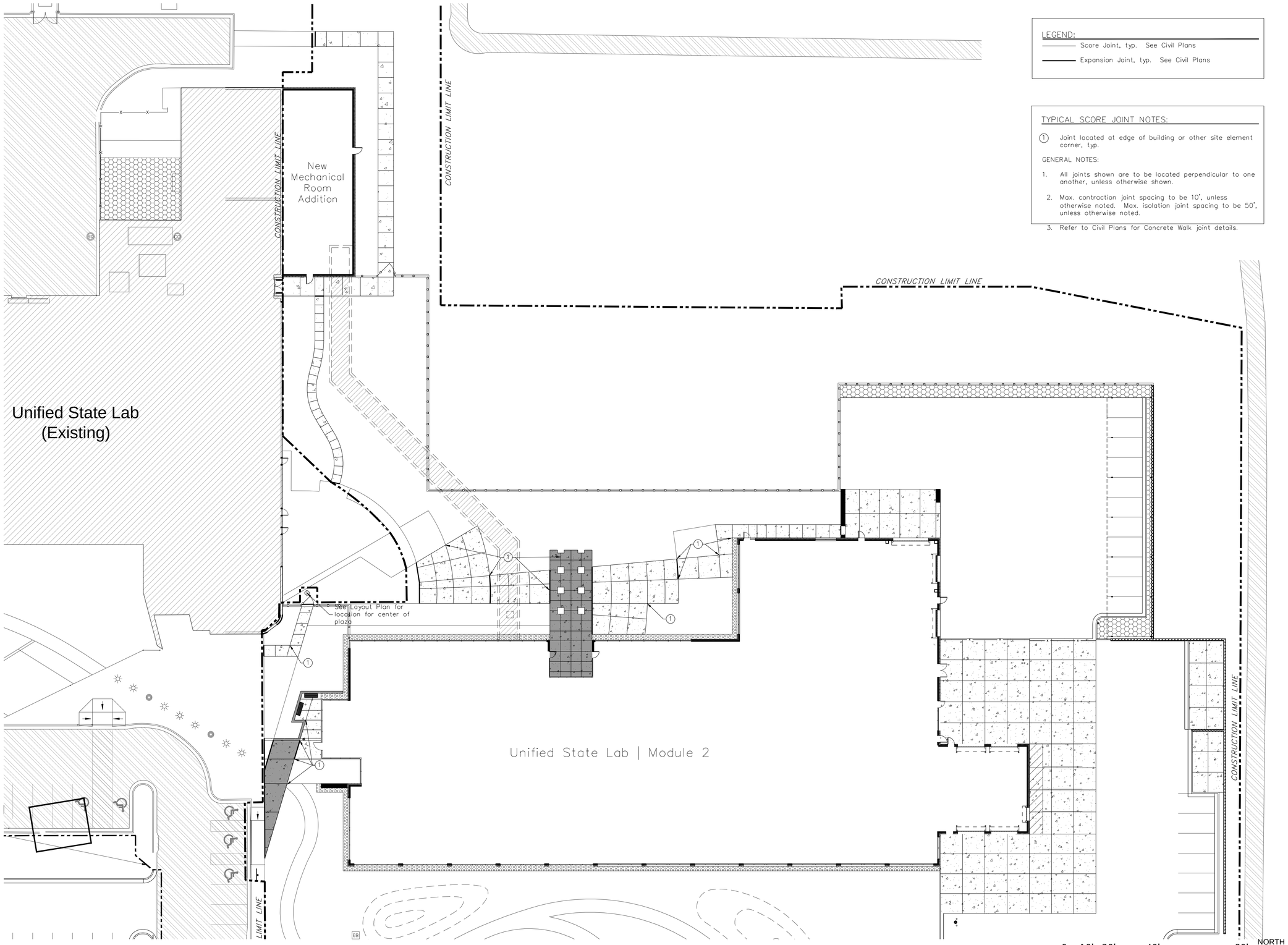

1 / LS201 SITE CONCRETE SCORE JOINT PLAN
1" = 20'-0"

LEGEND:

Score Joint, typ. See Civil Plans

Expansion Joint, typ. See Civil Plans

TYPICAL SCORE JOINT NOTES:

1. Joint located at edge of building or other site element corner, typ.

GENERAL NOTES:

1. All joints shown are to be located perpendicular to one another, unless otherwise shown.
2. Max. contraction joint spacing to be 10', unless otherwise noted. Max. isolation joint spacing to be 50', unless otherwise noted.
3. Refer to Civil Plans for Concrete Walk joint details.

CRSA
649 E. South Temple
Salt Lake City, UT 84102
801.355.5915

MWL
11798 N. Lakeridge Pkwy.
Ashland, VA 23005
804-228-7473

State of Utah
Department of Administrative Services
Division of Facilities Construction & Management
4110 State Office Building
Salt Lake City, Utah 84114
Phone: (801) 538 - 3018
Fax: (801) 538 - 3267

DIVISION OF FACILITIES CONSTRUCTION AND MANAGEMENT
REVIEWED FOR CODE COMPLIANCE
SIGNATURE: Ernie Gelfe
DATE: 08-05-2014

LICENSED LANDSCAPE ARCHITECT
JOHN KELLY GILLMAN
14818654-5505
STATE OF UTAH
01-28-2014
ARCHITECT-ENGINEER STAMP

Unified State Laboratory Module 2

4451 South 2700 West, Taylorsville, UT 84118

DFCM #: 13020300
Project #: B13-024

DATE:	ISSUE TYPE:
April 21, 2014	BID SET
CHECKED BY	KG
DRAWN BY	DL

SITE SCORE JOINT PLAN

LS201

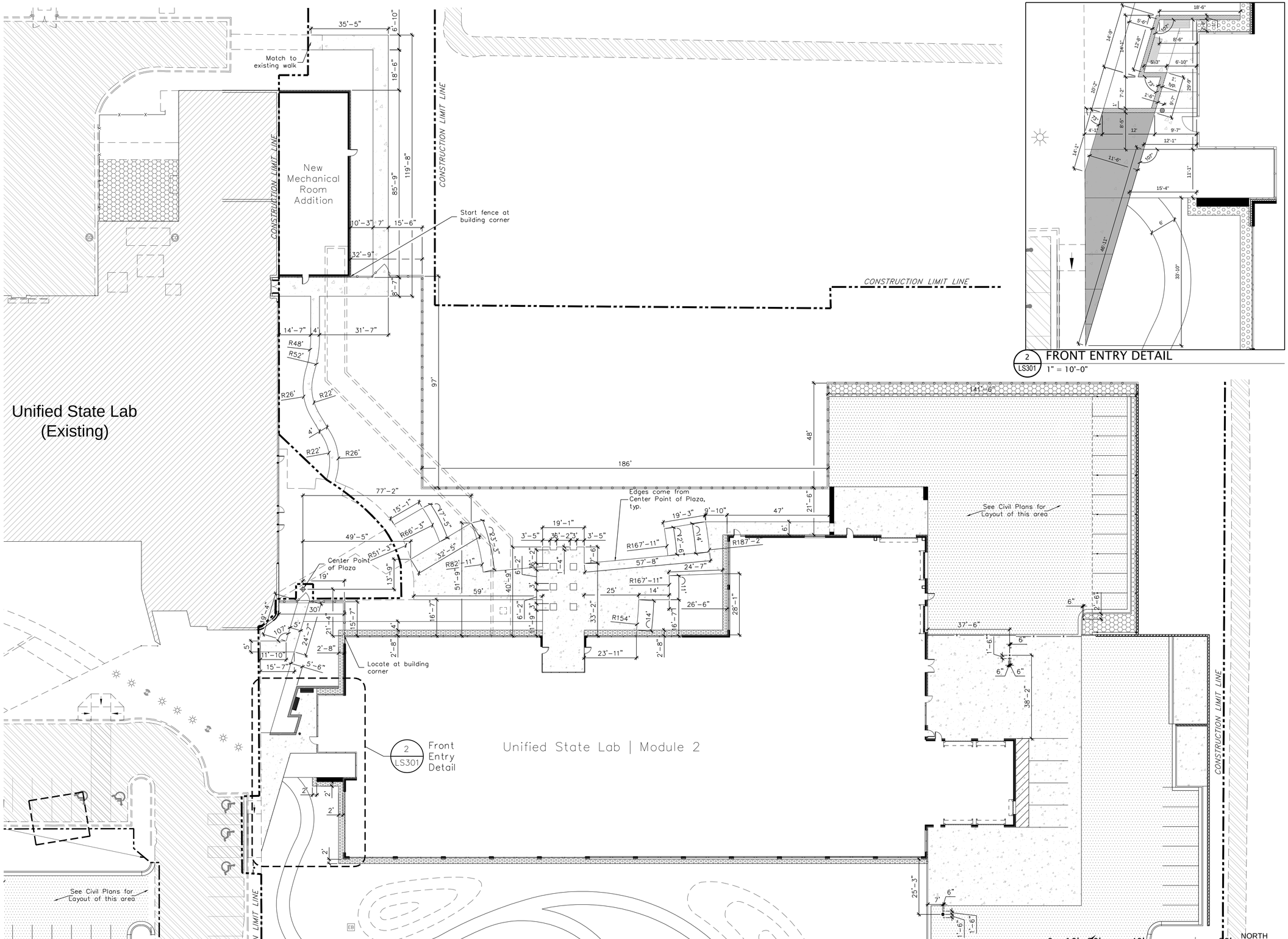

2 LS301 FRONT ENTRY DETAIL
1" = 10'-0"

1 LS301 SITE LAYOUT PLAN
1" = 20'-0"

CRSA
649 E. South Temple
Salt Lake City, UT 84102
801.355.5915

MWL
11798 N. Lakeridge Pkwy.
Ashland, VA 23005
804-228-7473

State of Utah
Department of Administrative Services
Division of Facilities
Construction & Management
4110 State Office Building
Salt Lake City, Utah 84114
Phone: (801) 538 - 3018
Fax: (801) 538 - 3267

DIVISION OF FACILITIES CONSTRUCTION AND MANAGEMENT
REVIEWED FOR CODE COMPLIANCE
SIGNATURE: Ernie Gelb
DATE: 08-05-2014

LICENSED LANDSCAPE ARCHITECT
JOHN KELLY GILLMAN
#4812634-5301
STATE OF UTAH
01-28-2014
ARCHITECT-ENGINEER STAMP

Unified State Laboratory Module 2

4451 South 2700 West,
Taylorsville, UT 84118

DFCM #:	13020300
Project #:	B13-024

DATE:	ISSUE TYPE:
April 21, 2014	BID SET
CHECKED BY	KG
DRAWN BY	DL

SITE LAYOUT PLAN

LS301

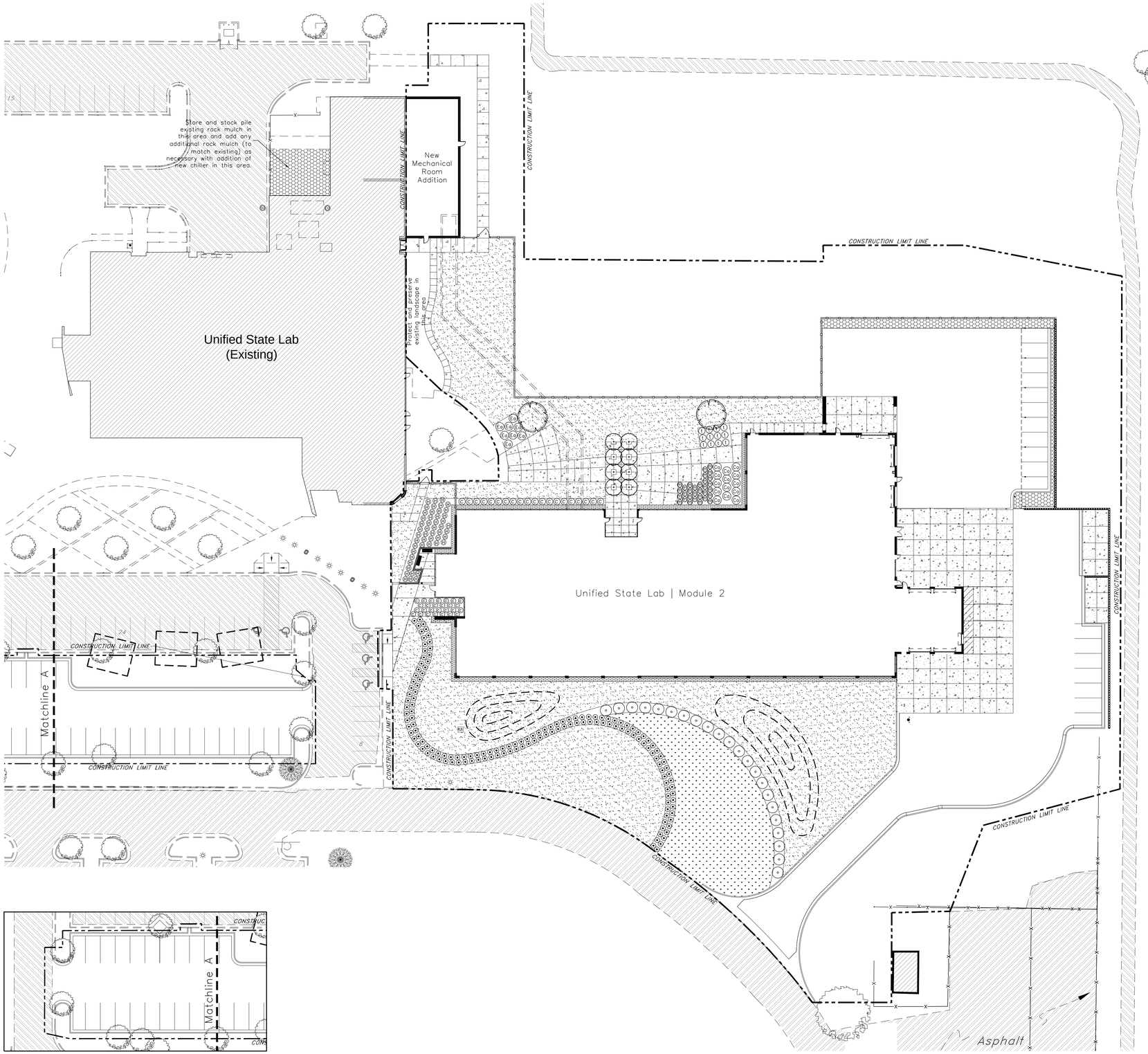

1 LS401 SITE PLANTING PLAN
1" = 30'-0"

PLANT SCHEDULE

SYMBOL	BOTANICAL NAME	COMMON NAME	SIZE
TREES			
	Acer platanoides 'Crimson Sentry'	Crimson Sentry	2" cal.
	Carpinus betulus 'Franz Fontaine'	Franz Fontaine Ho	2" cal.
	Existing Trees (To Remain), typ.		
SHRUBS			
Cr	Berberis thunbergii atropurpurea 'Crimson Pygmy'	Crimson Pygmy Bar	5 Gal.
Co	Cornus alba 'Cream Cracker'	Cream Cracker Dogwood	5 Gal.
Ea	Cornus alba 'Bailhalo'	Ivory Halo Dogwood	5 Gal.
Ey	Euonmyus alatus compacta	Dwarf Burning Bush	5 Gal.
t	Mahonia aquifolium 'Compacta'	Compact Oregon Grape	5 Gal.
	Prunus laurocerasus 'Otto Luykens'	Otto Luykens L	5 Gal.
	Viburnum burkwoodii	Burkwood Viburnum	5 Gal.
ORNAMENTAL GRASSES			
	Calamagrostis x acutiflora 'Karl Foerster'	Karl Foerster Grass	5 Gal.
H	Pennisetum alopecuroides 'Hameln'	Hameln Fountain Grass	3 Gal.
TURF GRASS			
	Sandy, UT	BellaBlue®Sod	Bio Grass Sod F
	Sandy, UT (less mowing variety)	BioMeadow®Sod	Bio Grass Sod F

NOTES:

1. All planting beds to be lined with commercial grade weed barrier fabric and topped with landscape mulch.
2. Coordinate all plantings with utility plan. Adjust trees as necessary.
3. Contractor to verify size and quantities of plant schedule.
4. It is the contractor's responsibility to verify the depth and location of existing and proposed utilities.
5. The contractor shall thoroughly investigate and locate all utilities prior to the start of construction. The contractor shall repair any damage to the existing or proposed utilities caused during construction.
6. The contractor shall be responsible for the restoration of any existing improvements that are damaged during construction to the satisfaction of the Owner.
7. The contractor shall take the necessary measures to avoid dust, debris, mud in streets, and erosion onto adjacent properties and into storm drains.

CRSA
649 E. South Temple
Salt Lake City, UT 84102
801.355.5915

MWL
11798 N. Lakeridge Pkwy.
Ashland, VA 23005
804-228-7473

State of Utah
Department of Administrative Services
Division of Facilities Construction & Management
4110 State Office Building
Salt Lake City, Utah 84114
Phone: (801) 538 - 3018
Fax: (801) 538 - 3267

DIVISION OF FACILITIES CONSTRUCTION AND MANAGEMENT
REVIEWED FOR CODE COMPLIANCE
SIGNATURE: Ernie Gelph
DATE: 08-05-2014

LICENSED LANDSCAPE ARCHITECT
JOHN KELLY GILLMAN
#4812654-5301
STATE OF UTAH
01-28-2014
ARCHITECT-ENGINEER STAMP

Unified State Laboratory Module 2

4451 South 2700 West, Taylorsville, UT 84118

DFCM #: 13020300
Project #: B13-024

DATE:	ISSUE TYPE:
April 21, 2014	BID SET

CHECKED BY: KG
DRAWN BY: DIL

SITE PLANTING PLAN

LS401

NOTE:
ALL IRRIGATION EQUIPMENT SHOWN IN PAVED AREAS IS FOR GRAPHIHC CLARITY ONLY. LOCATE ALL IRRIGATION EQUIPMENT IN PLANTING AREAS. ALL PIPE UNDER PAVED AREAS SHALL BE INSIDE SLEEVING.

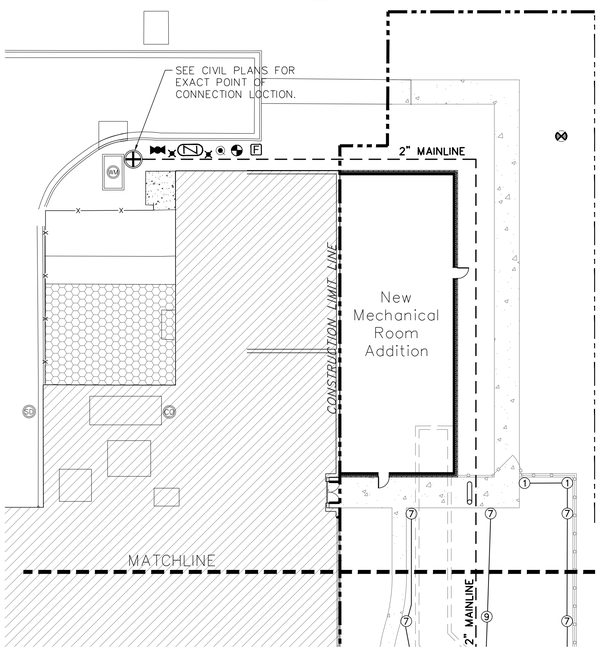

1 LS501 SITE IRRIGATION PLAN
1" = 20'-0"

0 10 20 40 80

NORTH

IRRIGATION LEGEND

POP-UP SPRAY HEADS

RAINBIRD RD-04-P45-F SPRAY HEAD W/ HUNTER MP1000 SERIES ROTATOR NOZZLES @ 45 PSI

- Ⓒ MPCORNER (45°-105°)
- ① MP1000-90 (90°-210°)
- ② MP1000-210 (210°-270°)
- ③ MP1000-360 (360°)

RAINBIRD RD-04-P45-F SPRAY HEAD W/ HUNTER MP2000 SERIES ROTATOR NOZZLES @ 45 PSI

- ④ MP2000-90 (90°-210°)
- ⑤ MP2000-210 (210°-270°)
- ⑥ MP2000-360 (360°)

RAINBIRD RD-04-P45-F SPRAY HEAD W/ HUNTER MP2000 SERIES ROTATOR NOZZLES @ 45 PSI

- ⑦ MP3000-90 (90°-210°)
- ⑧ MP3000-210 (210°-270°)
- ⑨ MP3000-360 (360°)

RAINBIRD RD-04-P45-F SPRAY HEAD W/ HUNTER MP SIDE STRIP SERIES ROTATOR NOZZLES @ 45 PSI

- Ⓛ MPLCS515 (LEFT CORNER)
- Ⓡ MPRCS515 (RIGHT CORNER)
- Ⓢ MPSS530 (SIDE STRIP)

RAINBIRD RWS ROOT WATERING SERIES. INSTALL TWO (2) RWS FOR EACH TREE, TYPICAL. SEE DETAIL FOR ADDITIONAL INFORMATION.

SYMBOL	MODEL
⊛	RWS-B-1402

IRRIGATION EQUIPMENT

- IRRIGATION WATER METER LOCATION. SEE CIVIL DRAWINGS FOR EXACT LOCATION AND DETAILS.
- MUELLER MARK II ORISEAL S & W (H-10288 | SIZE:1 1/2")
- CONBRACO WELD TOP VALVE (MODEL 78-154-01 | SIZE:3/4")
- WILKINS 1" MODEL 375B REDUCED PRESSURE PRINCIPLE ASSEMBLY BACKFLOW PREVENTER
- BPDI GUARDSHACK W/ ENCLOSURE PAD (GS-3, EP-3) VANDAL RESISTANT BACKFLOW ENCLOSURE
- F RAINBIRD FLOW SENSOR (MODEL # FS150P)
- RAINBIRD PEB-PRS-D SERIES REMOTE CONTROL VALVE. SET PRESSURE REGULATING MODULE TO ACHIEVE DESIRED PRESSURE.
- RAINBIRD 33DRC QUICK COUPLING VALVE
- A IRRIGATION CONTROLLER (INDOOR WALL MOUNT) RAINBIRD (MODEL # ESP12LXMEF (w/ flow sensing) W/ RAINBIRD IQ COMMUNICATION CARTRIDGE (MODEL # IQ NCC-GP (GPRS/CELLULAR CARTRIDGE))

CONTROL VALVE DESIGNATION:

A-8	
1"	25

← IRRIGATION CONTROLLER & VALVE NUMBER
← FLOW (IN GPM)
← VALVE SIZE

- PVC SCH 40 MAINLINE PIPE. SIZE AS NOTED.
- PVC SCH 40 PVC SLEEVING. ALL IRRIGATION CONTROL WIRES TO BE IN SEPARATE SLEEVE. SIZE AS REQUIRED, 2" MINIMUM. SEE SPECIFICATIONS FOR ADDITIONAL INFORMATION.
- SCHEDULE 40 PIPE LATERALS AND FITTINGS. SIZE AS SHOWN ON PLANS.

IRRIGATION GENERAL NOTES

1. THE IRRIGATION DESIGN IS DIAGRAMMATIC ONLY. ALL IRRIGATION COMPONENTS ARE TO BE INSTALLED IN LANDSCAPE AREAS. ITEMS SHOWN ON WALKWAYS AND BUILDINGS IS FOR GRAPHIC CLARITY ONLY. THE IRRIGATION CONTRACTOR SHALL BE RESPONSIBLE FOR THE INSTALLATION IN ACCORDANCE WITH THE DRAWINGS. LAYOUT MAY BE MODIFIED IF NECESSARY TO SUIT THE SITE. DO NOT INCREASE OR DECREASE THE NUMBER OF HEADS INDICATED ON PLANS UNLESS IT IS ACCEPTABLE TO THE LANDSCAPE ARCHITECT. THE SYSTEM SHALL BE TESTED FOR COMPLETE COVERAGE AND ALL NECESSARY ADJUSTMENTS MADE TO ACHIEVE PROPER COVERAGE PRIOR TO ACCEPTANCE BY THE OWNER.
2. CONTRACTOR TO VERIFY ALL EXISTING UTILITIES BEFORE CONSTRUCTION BEGINS. CONTRACTOR TO PROTECT AND PRESERVE ALL EXISTING UTILITIES LOCATED ON SITE. ANY DAMAGE TO EXISTING UTILITIES SHALL BE REPAIRED AND/OR REPLACED TO UTILITY OWNER'S STANDARDS AND SPECIFICATIONS AT CONTRACTOR'S EXPENSE.
3. CONTRACTOR TO HAVE ON-SITE PRE-CONSTRUCTION MEETING WITH OWNER'S REPRESENTATIVE AND LANDSCAPE ARCHITECT PRIOR TO ANY CONSTRUCTION.
4. CONTRACTOR SHALL PROVIDE AN AS-BUILT DRAWING OF THE IRRIGATION SYSTEM SHOWING EXACT MEASURED AND DIMENSIONED LOCATIONS OF ALL VALVES, WIRE SPLICES NOT IN A VALVE BOX AND DRAIN VALVES. SHOW DIMENSIONS TO PERMANENT SITE ELEMENT, SUCH AS EXISTING STRUCTURES.
5. ALL MAINLINES SHALL SLOPE TO DRAIN. ADD ANY ADDITIONAL DRAINS, AS THE SITE REQUIRES. DRAINS TO BE INSTALLED AS NECESSARY FOR COMPLETE DRAINAGE OF THE ENTIRE SYSTEM.
6. CONTRACTOR TO PROVIDE ALL EQUIPMENT, WIRING, AND CONDUIT SHOWN IN THE DETAILS FOR COMPLETE CONTROL AND OPERATION OF THE SYSTEM.
7. PROVIDE AND INSTALL ALL THE MANUFACTURER'S RECOMMENDED SURGE AND LIGHTING PROTECTION EQUIPMENT ON ALL NECESSARY SYSTEM COMPONENTS.

CRSA
649 E. South Temple
Salt Lake City, UT 84102
801.355.5915

MWL
11798 N. Lakeridge Pkwy.
Ashland, VA 23005
804-228-7473

State of Utah
Department of Administrative Services
DFCM
Division of Facilities Construction & Management
4110 State Office Building
Salt Lake City, Utah 84114
Phone: (801) 538 - 3018
Fax: (801) 538 - 3267

DIVISION OF FACILITIES CONSTRUCTION AND MANAGEMENT
REVIEWED FOR CODE COMPLIANCE
SIGNATURE: Ernie Gelfe
DATE: 08-05-2014

LICENSED LANDSCAPE ARCHITECT
JOHN KELLY GILLMAN
#4341854-5305
STATE OF UTAH
01-28-2014
ARCHITECT-ENGINEER STAMP

Unified State Laboratory Module 2

4451 South 2700 West, Taylorsville, UT 84118

DFCM #: 13020300
Project #: B13-024

DATE:	ISSUE TYPE:
April 21, 2014	BID SET
CHECKED BY	KG
DRAWN BY	DL

SITE IRRIGATION PLAN

LS501

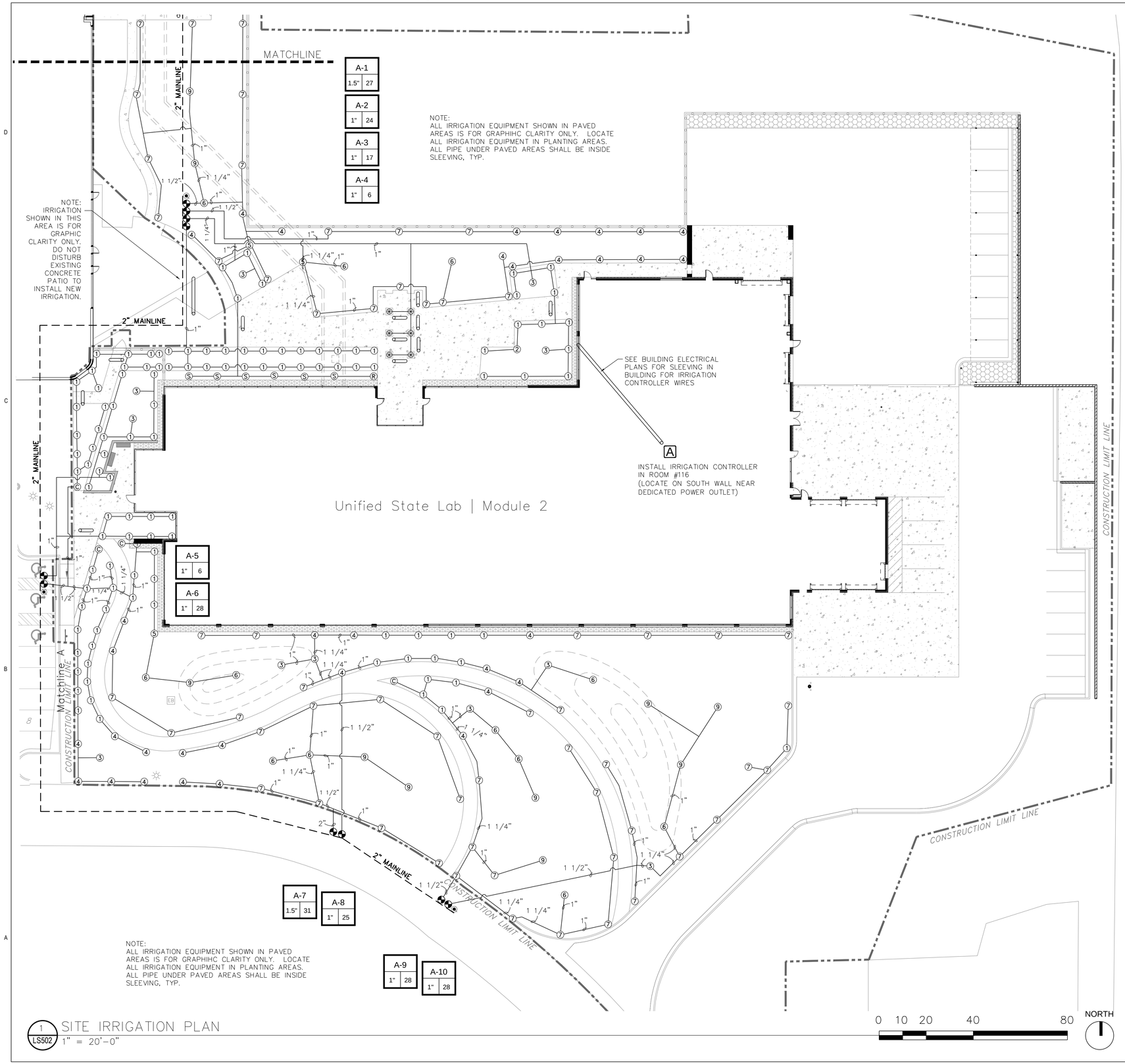

1 LS502 SITE IRRIGATION PLAN
1" = 20'-0"

IRRIGATION LEGEND

POP-UP SPRAY HEADS

RAINBIRD RD-04-P45-F SPRAY HEAD W/ HUNTER MP1000 SERIES ROTATOR NOZZLES @ 45 PSI

- Ⓒ MPCORNER (45°-105°)
- ① MP1000-90 (90°-210°)
- ② MP1000-210 (210°-270°)
- ③ MP1000-360 (360°)

RAINBIRD RD-04-P45-F SPRAY HEAD W/ HUNTER MP2000 SERIES ROTATOR NOZZLES @ 45 PSI

- ④ MP2000-90 (90°-210°)
- ⑤ MP2000-210 (210°-270°)
- ⑥ MP2000-360 (360°)

RAINBIRD RD-04-P45-F SPRAY HEAD W/ HUNTER MP2000 SERIES ROTATOR NOZZLES @ 45 PSI

- ⑦ MP3000-90 (90°-210°)
- ⑧ MP3000-210 (210°-270°)
- ⑨ MP3000-360 (360°)

RAINBIRD RD-04-P45-F SPRAY HEAD W/ HUNTER MP SIDE STRIP SERIES ROTATOR NOZZLES @ 45 PSI

- Ⓛ MPLCS515 (LEFT CORNER)
- Ⓡ MPRCS515 (RIGHT CORNER)
- Ⓢ MPSS530 (SIDE STRIP)

RAINBIRD RWS ROOT WATERING SERIES. INSTALL TWO (2) RWS FOR EACH TREE, TYPICAL. SEE DETAIL FOR ADDITIONAL INFORMATION.

SYMBOL	MODEL
⊛	RWS-B-1402

IRRIGATION EQUIPMENT

- IRRIGATION WATER METER LOCATION. SEE CIVIL DRAWINGS FOR EXACT LOCATION AND DETAILS.
- MUELLER MARK II ORISEAL S & W (H-10288 | SIZE:1 1/2")
- CONBRACO WELD TOP VALVE (MODEL 78-154-01 | SIZE:3/4")
- WILKINS 1" MODEL 375B REDUCED PRESSURE PRINCIPLE ASSEMBLY BACKFLOW PREVENTER
- BPDI GUARDSHACK W/ ENCLOSURE PAD (GS-3, EP-3) VANDAL RESISTANT BACKFLOW ENCLOSURE
- F RAINBIRD FLOW SENSOR (MODEL # FS150P)
- RAINBIRD PEB-PRS-D SERIES REMOTE CONTROL VALVE. SET PRESSURE REGULATING MODULE TO ACHIEVE DESIRED PRESSURE.
- RAINBIRD 33DRC QUICK COUPLING VALVE
- A IRRIGATION CONTROLLER (INDOOR WALL MOUNT) RAINBIRD (MODEL # ESP12LXMEF (w/ flow sensing) W/ RAINBIRD IQ COMMUNICATION CARTRIDGE (MODEL # IQ NCC-GP (GPRS/CELLULAR CARTRIDGE))

CONTROL VALVE DESIGNATION:

A-8	← IRRIGATION CONTROLLER & VALVE NUMBER
1"	← FLOW (IN GPM)
25	← VALVE SIZE

- PVC SCH 40 MAINLINE PIPE. SIZE AS NOTED.
- PVC SCH 40 PVC SLEEVING. ALL IRRIGATION CONTROL WIRES TO BE IN SEPARATE SLEEVE. SIZE AS REQUIRED, 2" MINIMUM. SEE SPECIFICATIONS FOR ADDITIONAL INFORMATION.
- SCHEDULE 40 PIPE LATERALS AND FITTINGS. SIZE AS SHOWN ON PLANS.

IRRIGATION GENERAL NOTES

1. THE IRRIGATION DESIGN IS DIAGRAMMATIC ONLY. ALL IRRIGATION COMPONENTS ARE TO BE INSTALLED IN LANDSCAPE AREAS. ITEMS SHOWN ON WALKWAYS AND BUILDINGS IS FOR GRAPHIC CLARITY ONLY. THE IRRIGATION CONTRACTOR SHALL BE RESPONSIBLE FOR THE INSTALLATION IN ACCORDANCE WITH THE DRAWINGS. LAYOUT MAY BE MODIFIED IF NECESSARY TO SUIT THE SITE. DO NOT INCREASE OR DECREASE THE NUMBER OF HEADS INDICATED ON PLANS UNLESS IT IS ACCEPTABLE TO THE LANDSCAPE ARCHITECT. THE SYSTEM SHALL BE TESTED FOR COMPLETE COVERAGE AND ALL NECESSARY ADJUSTMENTS MADE TO ACHIEVE PROPER COVERAGE PRIOR TO ACCEPTANCE BY THE OWNER.
2. CONTRACTOR TO VERIFY ALL EXISTING UTILITIES BEFORE CONSTRUCTION BEGINS. CONTRACTOR TO PROTECT AND PRESERVE ALL EXISTING UTILITIES LOCATED ON SITE. ANY DAMAGE TO EXISTING UTILITIES SHALL BE REPAIRED AND/OR REPLACED TO UTILITY OWNER'S STANDARDS AND SPECIFICATIONS AT CONTRACTOR'S EXPENSE.
3. CONTRACTOR TO HAVE ON-SITE PRE-CONSTRUCTION MEETING WITH OWNER'S REPRESENTATIVE AND LANDSCAPE ARCHITECT PRIOR TO ANY CONSTRUCTION.
4. CONTRACTOR SHALL PROVIDE AN AS-BUILT DRAWING OF THE IRRIGATION SYSTEM SHOWING EXACT MEASURED AND DIMENSIONED LOCATIONS OF ALL VALVES, WIRE SPLICES NOT IN A VALVE BOX AND DRAIN VALVES. SHOW DIMENSIONS TO PERMANENT SITE ELEMENT, SUCH AS EXISTING STRUCTURES.
5. ALL MAINLINES SHALL SLOPE TO DRAIN. ADD ANY ADDITIONAL DRAINS, AS THE SITE REQUIRES. DRAINS TO BE INSTALLED AS NECESSARY FOR COMPLETE DRAINAGE OF THE ENTIRE SYSTEM.
6. CONTRACTOR TO PROVIDE ALL EQUIPMENT, WIRING, AND CONDUIT SHOWN IN THE DETAILS FOR COMPLETE CONTROL AND OPERATION OF THE SYSTEM.
7. PROVIDE AND INSTALL ALL THE MANUFACTURER'S RECOMMENDED SURGE AND LIGHTING PROTECTION EQUIPMENT ON ALL NECESSARY SYSTEM COMPONENTS.

CRSA
649 E. South Temple
Salt Lake City, UT 84102
801.355.5915

MWL
11798 N. Lakeridge Pkwy.
Ashland, VA 23005
804-228-7473

State of Utah
Department of Administrative Services
Division of Facilities Construction & Management
4110 State Office Building
Salt Lake City, Utah 84114
Phone: (801) 538 - 3018
Fax: (801) 538 - 3267

DIVISION OF FACILITIES CONSTRUCTION AND MANAGEMENT
REVIEWED FOR CODE COMPLIANCE
SIGNATURE: Ernie Gelb
DATE: 08-05-2014

LICENSED LANDSCAPE ARCHITECT
JOHN KELLY GILLMAN
#4812654-5305
STATE OF UTAH
01-28-2014
ARCHITECT-ENGINEER STAMP

Unified State Laboratory Module 2

4451 South 2700 West, Taylorsville, UT 84118

DFCM #: 13020300
Project #: B13-024

DATE:	ISSUE TYPE:
April 21, 2014	BID SET
CHECKED BY	KG
DRAWN BY	DL

SITE IRRIGATION PLAN

LS502

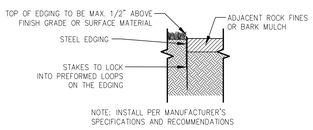

1 / LS600 METAL LANDSCAPE EDGING
3/4" = 1'-0"

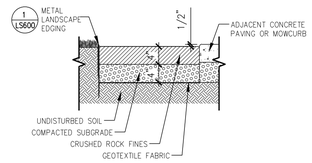

2 / LS600 CRUSHED ROCK PAVING
3/4" = 1'-0"

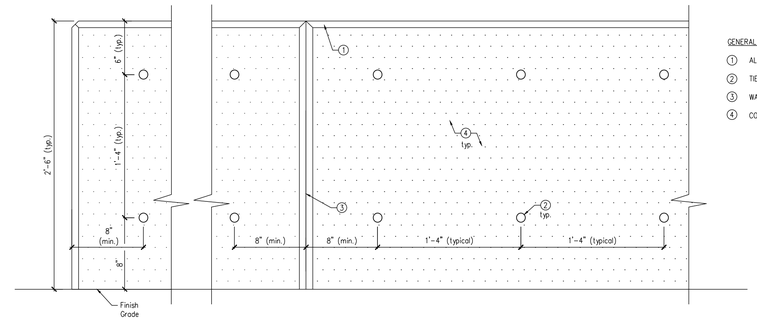

GENERAL CONCRETE WALL DETAILING NOTES:

1. ALL EXPOSED EDGES OF WALLS TO HAVE CHAMFER EDGE. TYPICAL CHAMFER DIMENSION IS 3/-
2. TIE ROD CONE, TYPICAL. SEE DETAIL x, SHEET LSxxx FOR TIE ROD CONE SPACING.
3. WALL REVEAL, TYP. MAXIMUM LENGTH BETWEEN REVEALS IS 10'-0"
4. CONCRETE WALL FACE, TYPICAL.

3 / LS600 FRONT ENTRY WALL TIE ROD DETAIL - ELEVATION
1 1/2" = 1'-0"

GENERAL CONCRETE WALL DETAILING NOTES:

1. ALL EXPOSED EDGES OF WALLS TO HAVE CHAMFER EDGE. TYPICAL CHAMFER DIMENSION IS 3/-
2. TIE ROD CONE, TYPICAL. SEE DETAIL x, SHEET LSxxx FOR TIE ROD CONE SPACING.
3. WALL REVEAL, TYP. MAXIMUM LENGTH BETWEEN REVEALS IS 10'-0"
4. CONCRETE WALL FACE, TYPICAL.

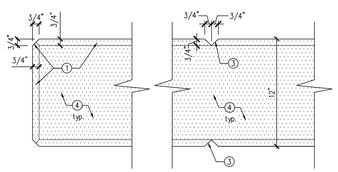

4 / LS600 WALL PLAN VIEW DETAIL
1 1/2" = 1'-0"

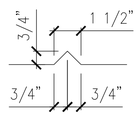

5 / LS600 TYPICAL WALL REVEAL DETAIL
3" = 1'-0"

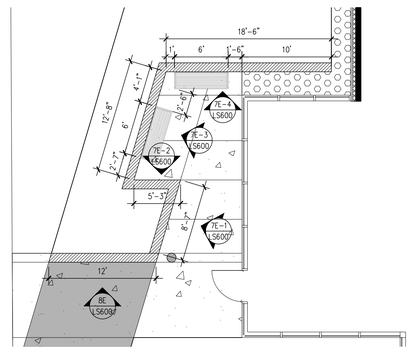

6 / LS600 SIGN AND FRONT ENTRY WALLS - PLAN VIEW
1/8" = 1'-0"

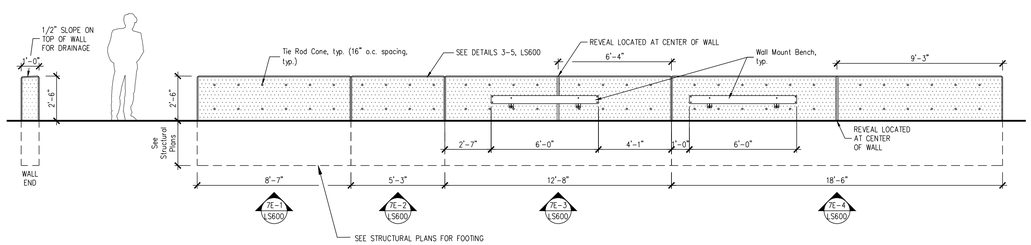

7 / LS600 FRONT ENTRY WALL - ELEVATION
1/4" = 1'-0"

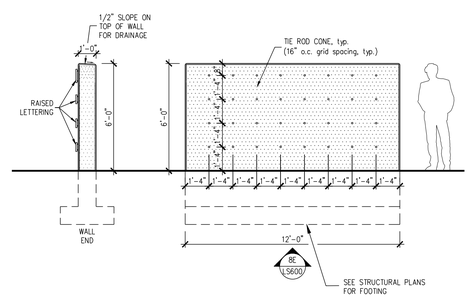

8 / LS600 SIGN WALL - ELEVATION
1/4" = 1'-0"

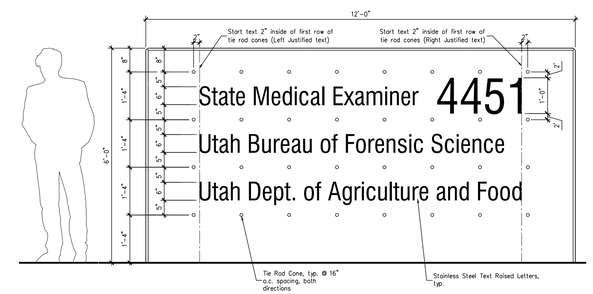

Notes:

1. Center Text in 16" tie rod spacings, typ.
2. Text font is Swis 721 Cn BT. See plan for text height.
3. Submit shop drawings for approval prior to installation.

9 / LS600 SIGN WALL - LETTERING DETAIL
1/2" = 1'-0"

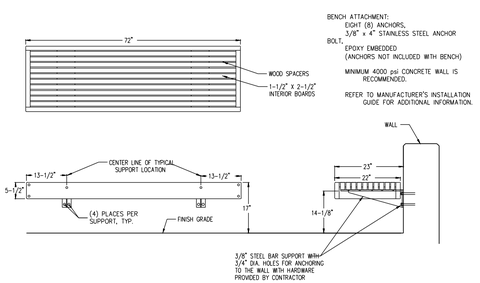

10 / LS600 WALL MOUNT BENCH
1/2" = 1'-0"

CRSA
649 E. South Temple
Salt Lake City, UT 84102
801.355.5915

MWL
11798 N. Lakeridge Pkwy.
Ashland, VA 23005
804-228-7473

State of Utah
Department of Administrative Services
Division of Facilities Construction & Management
4110 State Office Building
Salt Lake City, Utah 84114
Phone: (801) 538 - 3018
Fax: (801) 538 - 3267

DIVISION OF FACILITIES CONSTRUCTION AND MANAGEMENT
REVIEWED FOR CODE COMPLIANCE
SIGNATURE: Eric Galt
DATE: 08-05-2014

LICENSED LANDSCAPE ARCHITECT
JOHN KELLY GILLMAN
14612634-5302
STATE OF UTAH
01-28-2014
ARCHITECT-ENGINEER STAMP

Unified State Laboratory Module 2
4451 South 2700 West, Taylorsville, UT 84118

DFCM #:	13020300
Project #:	B13-024
DATE:	ISSUE TYPE:
April 21, 2014	BID SET
CHECKED BY	KG
DRAWN BY	DIL

SITE DETAILS

LS600

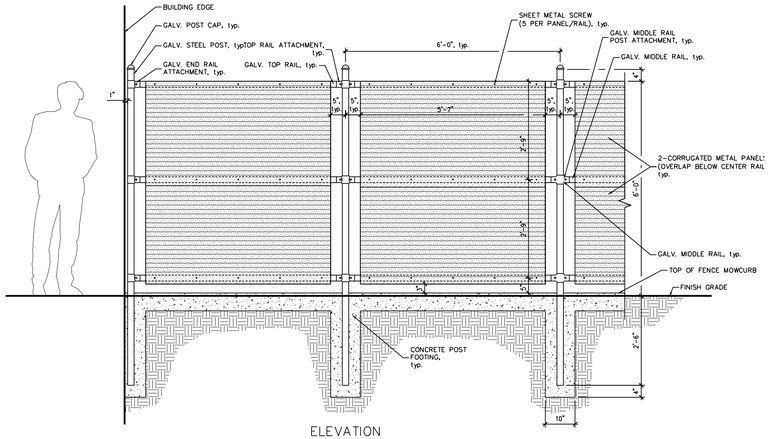

ELEVATION

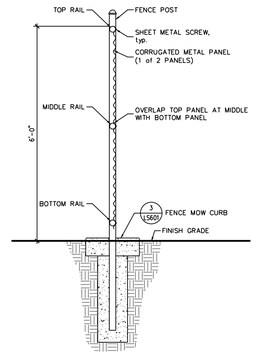

SIDE VIEW

NOTES:

1. CONTRACTOR TO PROTECT, SALVAGE AND STORE METAL GATE (AND ITS COMPONENTS) FOR RE-USE ON THIS PROJECT.
2. FENCE COMPONENTS ARE STANDARD CHAIN LINK FENCING MATERIAL.
3. ALL FENCE COMPONENTS ARE GALVANIZED.
4. SEE HARDWARE SPECS FOR ALL GATE HARDWARE.
5. CONTRACTOR TO SUBMIT SHOP DRAWINGS OF FENCE FOR APPROVAL BY OWNER AND LANDSCAPE ARCHITECT PRIOR TO INSTALLATION.

1 LS601 PERIMETER FENCE
1/2" = 1'-0"

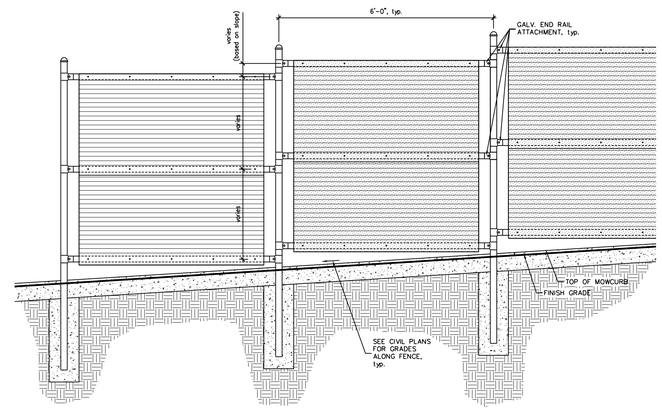

ELEVATION

2 LS601 PERIMETER FENCE (AT SLOPE CONDITION)
1/2" = 1'-0"

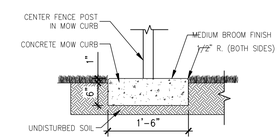

3 LS601 FENCE MOW CURB
3/4" = 1'-0"

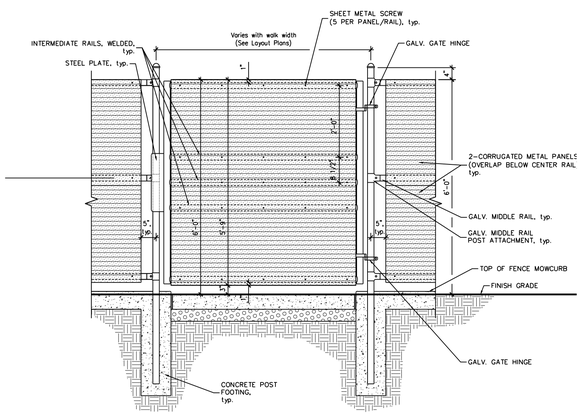

OUTSIDE ELEVATION

4 LS601 FENCE GATE (OUTSIDE ELEVATION)
1/2" = 1'-0"

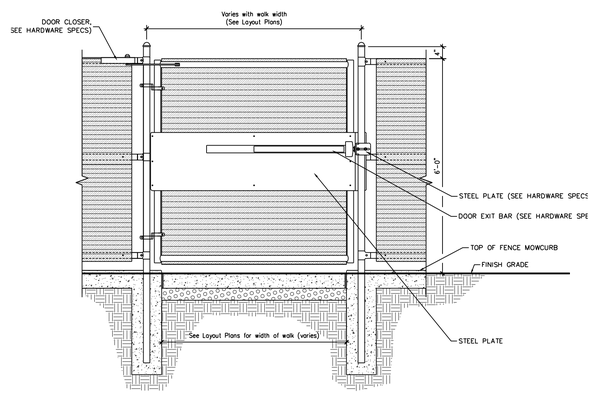

INSIDE ELEVATION

5 LS601 FENCE GATE (INSIDE ELEVATION)
1/2" = 1'-0"

TYPICAL FENCE SECTION

FENCE POST @ BUILDING EDGE

POST CONNECTION DETAIL

POST AND RAIL CONNECTION DETAIL

6 LS601 EXISTING FENCE PICTURES (MATCH EXISTING)
NTS

FENCE ELEVATION ALONG SLOPE

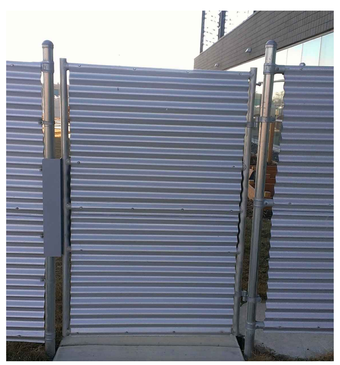

FENCE GATE (OUTSIDE ELEVATION)

FENCE GATE (INSIDE ELEVATION)

GATE EXIT DOOR DETAIL

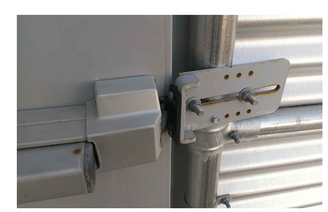

GATE EXIT DOOR HARDWARE DETAIL

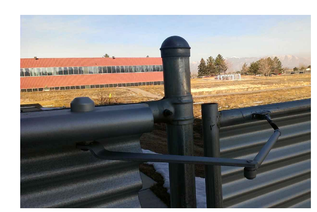

GATE EXIT DOOR CLOSER DETAIL

7 LS601 EXISTING FENCE PICTURES (MATCH EXISTING)
NTS

CRSA
649 E. South Temple
Salt Lake City, UT 84102
801.355.5915

MWL
11798 N. Lakeridge Pkwy.
Ashland, VA 23005
804-228-7473

State of Utah
Department of Administrative Services
Division of Facilities Construction & Management
4110 State Office Building
Salt Lake City, Utah 84114
Phone: (801) 538 - 3018
Fax: (801) 538 - 3267

DIVISION OF FACILITIES CONSTRUCTION AND MANAGEMENT
REVIEWED FOR CODE COMPLIANCE
SIGNATURE: Ernie Galt
DATE: 08-05-2014

LICENSED LANDSCAPE ARCHITECT
JOHN KELLY GILLMAN
(4812)254-5305
STATE OF UTAH
01-28-2014
ARCHITECT-ENGINEER STAMP

Unified State Laboratory Module 2
4451 South 2700 West,
Taylorsville, UT 84118

DFCM #: 13020300
Project #: B13-024

DATE:	ISSUE TYPE:
April 21, 2014	BID SET

CHECKED BY	KG
DRAWN BY	DIL

SITE DETAILS

LS601

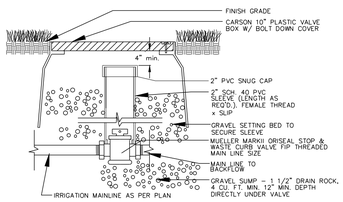

1 LS602 STOP & WASTE VALVE
NTS

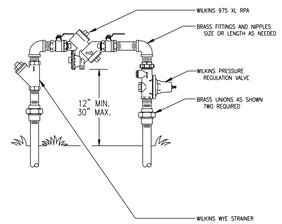

1. LOCATE BACKFLOW DEVICE IN INCONSPICUOUS AREA IF POSSIBLE.
2. ALL PIPE, FITTINGS AND COMPONENTS SHALL BE BRASS.

2 LS602 BACKFLOW PREVENTER ASSEMBLY
NTS

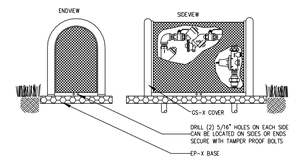

1. INSTALL TO MANUFACTURERS RECOMMENDATION.

3 LS602 BACKFLOW PREVENTER ENCLOSURE
NTS

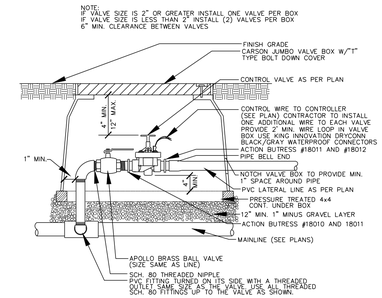

4 LS602 CONTROL VALVE
NTS

NOTE:

◈ FLOW SENSOR SHALL BE CONNECTED TO THE CONTROLLER PER ALL LOCAL CODES AND REGULATIONS CONTRACTOR TO BRING WIRE TO CONTROLLER ALL WORK TO BE AS PER MANUF'S. SPECS., AS REQUIRED.

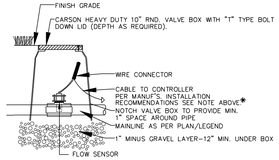

NOTE:
INSTALL FLOW SENSOR AT LEAST 10 TIMES PIPE SIZE DIA. UPSTREAM AND 5 TIMES PIPE SIZE DIA. DOWNSTREAM OF STRAIGHT UNINTERRUPTED FLOW FROM ANY MAIN LINE FITTINGS

5 LS602 FLOW SENSOR
NTS

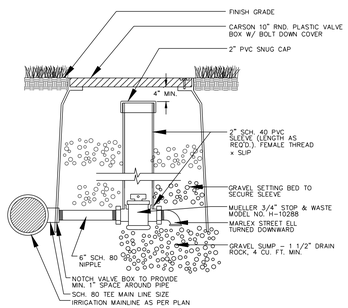

6 LS602 MANUAL MAINLINE DRAIN
NTS

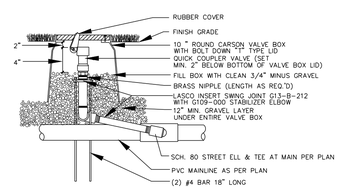

7 LS602 QUICK COUPLER VALVE
NTS

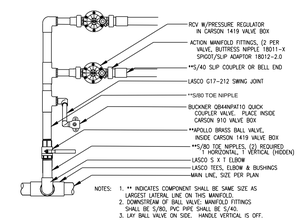

NOTES: 1. ** INDICATES COMPONENT SHALL BE SAME SIZE AS LARGEST LATERAL LINE ON THIS MANIFOLD.
2. DOWNSTREAM OF BALL VALVE, MANIFOLD FITTINGS SHALL BE S/80, PVC PIPE SHALL BE S/40.
3. LAY BALL VALVE ON SIDE. HANDLE VERTICAL IS OFF.

8 LS602 CONTROL VALVE MANIFOLD
NTS

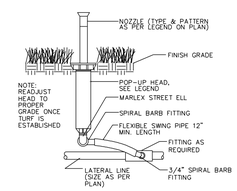

9 LS602 POP-UP SPRAY HEAD
NTS

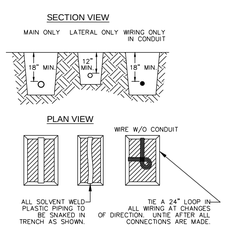

NOTES:
1. MAIN LINE SHALL HAVE 18" MIN. COVER, LATERAL LINE SHALL HAVE 12" MIN. COVER.

10 LS602 TRENCHING DETAIL
NTS

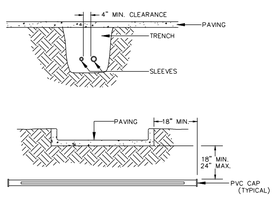

NOTES:
1. SLEEVES SHALL BE TWICE THE DIAMETER OF THE PIPE WITHIN.
2. SLEEVING SIZES 2" THRUGH 4" SHALL BE S/40 SOLVENT WELD. 6" AND ABOVE SHALL BE CL 200 GASKETED.
3. PIPE AND WIRE SHALL BE PLACED IN SEPARATE SLEEVES.
4. ALL JOINTS TO BE SOLVENT WELDED AND WATERTIGHT.
5. WHERE THERE IS MORE THAN ONE SLEEVE, PLACE THEM PARALLEL IN TRENCH. DO NOT PLACE ON TOP OF EACH OTHER.
6. MECHANICALLY TAMP TO 96% MODIFIED PROCTOR.

11 LS602 SLEEVING DETAIL
NTS

CRSA
649 E. South Temple
Salt Lake City, UT 84102
801.355.5915

MWL
11798 N. Lakeridge Pkwy.
Ashland, VA 23005
804-228-7473

State of Utah
Department of Administrative Services
Division of Facilities Construction & Management
4110 State Office Building
Salt Lake City, Utah 84114
Phone: (801) 538 - 3018
Fax: (801) 538 - 3267

DIVISION OF FACILITIES CONSTRUCTION AND MANAGEMENT
REVIEWED FOR CODE COMPLIANCE
SIGNATURE: Ernie Gulf
DATE: 08-05-2014

REGISTERED LANDSCAPE ARCHITECT
JOHN KELLY GILLMAN
#4934054-5302
STATE OF UTAH
01-28-2014
ARCHITECT-ENGINEER STAMP

Unified State Laboratory Module 2
4451 South 2700 West, Taylorsville, UT 84118

DFCM #: 13020300
Project #: B13-024

DATE:	ISSUE TYPE:
April 21, 2014	BID SET
CHECKED BY	KG
DRAWN BY	DL

SITE DETAILS

LS602

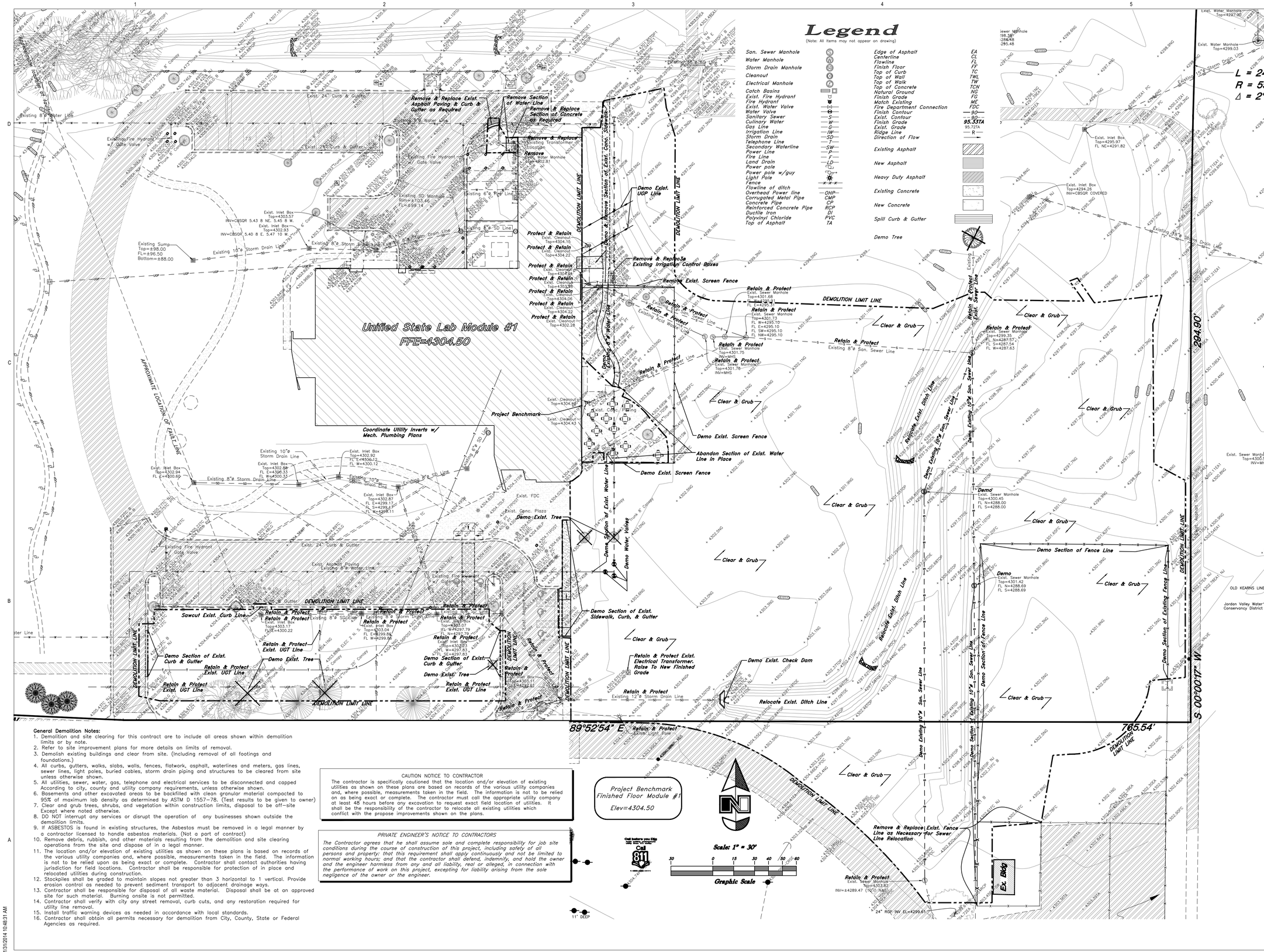

General Demolition Notes:

1. Demolition and site clearing for this contract are to include all areas shown within demolition limits or by note.
2. Refer to site improvement plans for more details on limits of removal.
3. Demolish existing buildings and clear from site. (Including removal of all footings and foundations.)
4. All curbs, gutters, walks, slabs, walls, fences, flatwork, asphalt, waterlines and meters, gas lines, sewer lines, light poles, buried cables, storm drain piping and structures to be cleared from site unless otherwise shown.
5. All utilities, sewer, water, gas, telephone and electrical services to be disconnected and capped According to city, county and utility company requirements, unless otherwise shown.
6. Basements and other excavated areas to be backfilled with clean granular material compacted to 95% of maximum lab density as determined by ASTM D 1557–78. (Test results to be given to owner)
7. Clear and grub trees, shrubs, and vegetation within construction limits, disposal to be off–site Except where noted otherwise.
8. DO NOT interrupt any services or disrupt the operation of any businesses shown outside the demolition limits.
9. If ASBESTOS is found in existing structures, the Asbestos must be removed in a legal manner by a contractor licensed to handle asbestos materials. (Not a part of contract)
10. Remove debris, rubbish, and other materials resulting from the demolition and site clearing operations from the site and dispose of in a legal manner.
11. The location and/or elevation of existing utilities as shown on these plans is based on records of the various utility companies and, where possible, measurements taken in the field. The information is not to be relied upon as being exact or complete. Contractor shall contact authorities having jurisdiction for field locations. Contractor shall be responsible for protection of in place and relocated utilities during construction.
12. Stockpiles shall be graded to maintain slopes not greater than 3 horizontal to 1 vertical. Provide erosion control as needed to prevent sediment transport to adjacent drainage ways.
13. Contractor shall be responsible for disposal of all waste material. Disposal shall be at an approved site for such material. Burning onsite is not permitted.
14. Contractor shall verify with city any street removal, curb cuts, and any restoration required for utility line removal.
15. Install traffic warning devices as needed in accordance with local standards.
16. Contractor shall obtain all permits necessary for demolition from City, County, State or Federal Agencies as required.

CAUTION NOTICE TO CONTRACTOR

The contractor is specifically cautioned that the location and/or elevation of existing utilities as shown on these plans are based on records of the various utility companies and, where possible, measurements taken in the field. The information is not to be relied on as being exact or complete. The contractor must call the appropriate utility company at least 48 hours before any excavation to request exact field location of utilities. It shall be the responsibility of the contractor to relocate all existing utilities which conflict with the propose improvements shown on the plans.

PRIVATE ENGINEER'S NOTICE TO CONTRACTORS

The Contractor agrees that he shall assume sole and complete responsibility for job site conditions during the course of construction of this project, including safety of all persons and property: that this requirement shall apply continuously and not be limited to normal working hours; and that the contractor shall defend, indemnify, and hold the owner and the engineer harmless from any and all liability, real or alleged, in connection with the performance of work on this project, excepting for liability arising from the sole negligence of the owner or the engineer.

CRSA
649 E. South Temple
Salt Lake City, UT 84102
801.355.5915

MWL
11798 N. Lakeridge Pkwy.
Ashland, VA 23005
804-228-7473

State of Utah
Department of Administrative Services
Division of Facilities Construction & Management
4110 State Office Building
Salt Lake City, Utah 84114
Phone: (801) 538 - 3018
Fax: (801) 538 - 3267

DIVISION OF FACILITIES CONSTRUCTION AND MANAGEMENT
REVIEWED FOR CODE COMPLIANCE
SIGNATURE: Ernie Gulf
DATE: 08-05-2014

PROFESSIONAL ENGINEER
7742907
ALBERT COURY MORRIS
4-21-14
STATE OF UTAH

ARCHITECT-ENGINEER STAMP

Unified State Laboratory Module 2

4451 South 2700 West, Taylorsville, UT 84118

DFCM #:	13020300
Project #:	B13-024

DATE:	ISSUE TYPE:
April 21, 2014	BID SET

CHECKED BY	C. MORRIS
DRAWN BY	R. CHILD

DEMOLITION PLAN

C000

VOLUME 1

C:\Users\lemando\Documents_A_13024_Modl_2013_lemando.rvt
1/31/2014 10:48:31 AM

W:\13N904 Unified State Labs Module #2\dwg\13N904-S4.dwg, 4/18/2014 2:39:47 PM, RebeccaC, 1:1

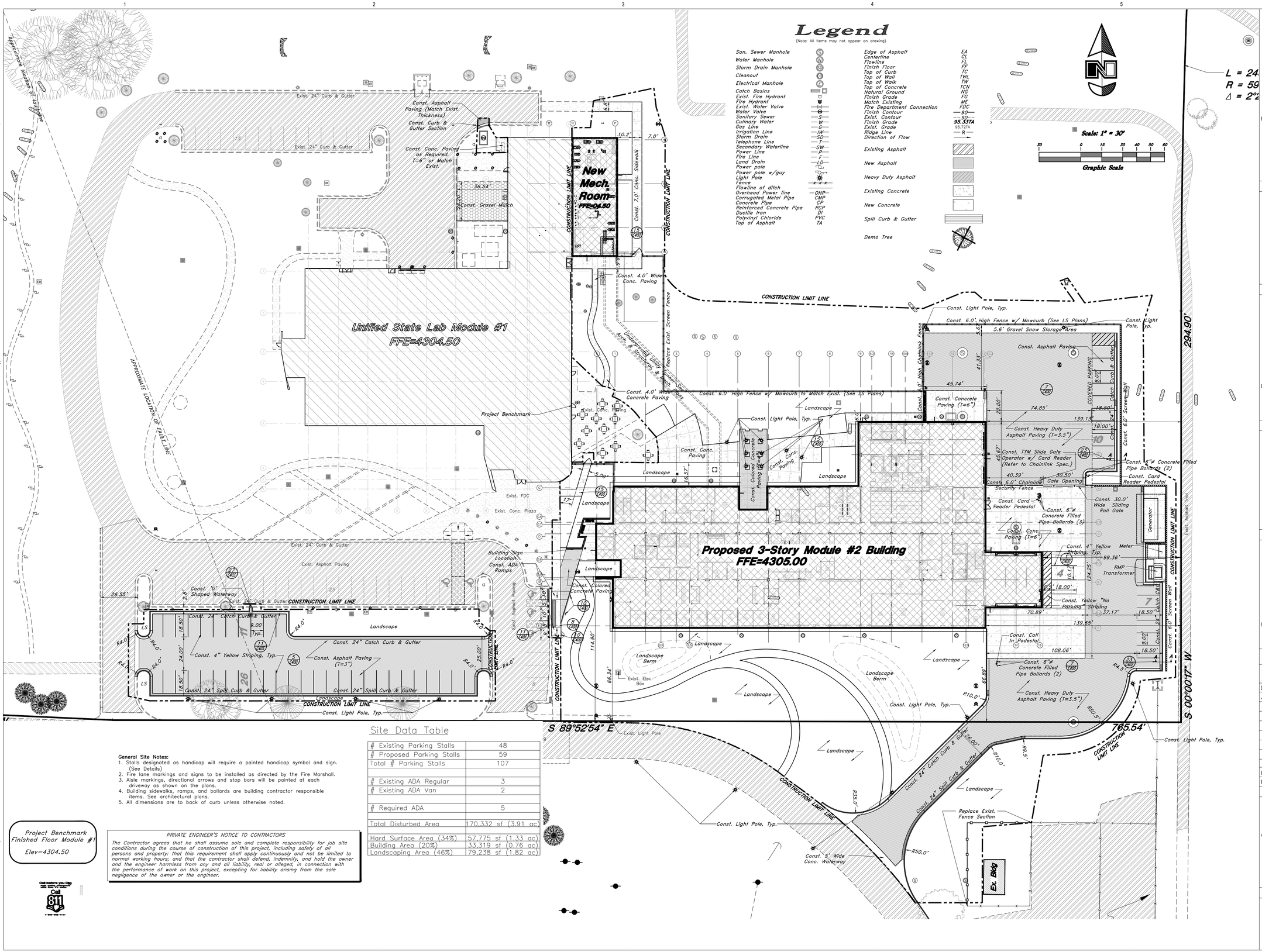

Site Data Table

# Existing Parking Stalls	48
# Proposed Parking Stalls	59
Total # Parking Stalls	107
# Existing ADA Regular	3
# Existing ADA Van	2
# Required ADA	5
Total Disturbed Area	170,332 sf (3.91 ac)
Hard Surface Area (34%)	57,775 sf (1.33 ac)
Building Area (20%)	33,319 sf (0.76 ac)
Landscaping Area (46%)	79,238 sf (1.82 ac)

General Site Notes:

1. Stalls designated as handicap will require a painted handicap symbol and sign. (See Details)
2. Fire lane markings and signs to be installed as directed by the Fire Marshall.
3. Aisle markings, directional arrows and stop bars will be painted at each driveway as shown on the plans.
4. Building sidewalks, ramps, and bollards are building contractor responsible items. See architectural plans.
5. All dimensions are to back of curb unless otherwise noted.

Project Benchmark
Finished Floor Module #1
Elev=4304.50

PRIVATE ENGINEER'S NOTICE TO CONTRACTORS

The Contractor agrees that he shall assume sole and complete responsibility for job site conditions during the course of construction of this project, including safety of all persons and property; that this requirement shall apply continuously and not be limited to normal working hours; and that the contractor shall defend, indemnify, and hold the owner and the engineer harmless from any and all liability, real or alleged, in connection with the performance of work on this project, excepting for liability arising from the sole negligence of the owner or the engineer.

Call before you Dig
Call 811
1-800-662-4111

C:\Users\fernando\Documents_A_13024_Modl1_2013_fernando.rvt
1/31/2014 10:48:31 AM

W:\13N904 Unified State Labs Module #2\dwg\13N904-S4.dwg, 4/18/2014 2:39:54 PM, RebeccaC, 1:1

CRSA
649 E. South Temple
Salt Lake City, UT 84102
801.355.5915

MWL
11798 N. Lakeridge Pkwy.
Ashland, VA 23005
804-228-7473

State of Utah
Department of Administrative Services
Division of Facilities Construction & Management
4110 State Office Building
Salt Lake City, Utah 84114
Phone: (801) 538 - 3018
Fax: (801) 538 - 3267

DIVISION OF FACILITIES CONSTRUCTION AND MANAGEMENT
REVIEWED FOR CODE COMPLIANCE
SIGNATURE: Ernie Gulf
DATE: 08-05-2014

PROFESSIONAL ENGINEER
7742907
ALBERT COURY MORRIS
4-21-14
STATE OF UTAH

ARCHITECT-ENGINEER STAMP

Unified State Laboratory Module 2

4451 South 2700 West, Taylorsville, UT 84118

DFCM #:	13020300
Project #:	B13-024

DATE:	ISSUE TYPE:
April 21, 2014	BID SET

CHECKED BY	C. MORRIS
DRAWN BY	R. CHILD

SITE PLAN

C100

VOLUME 1

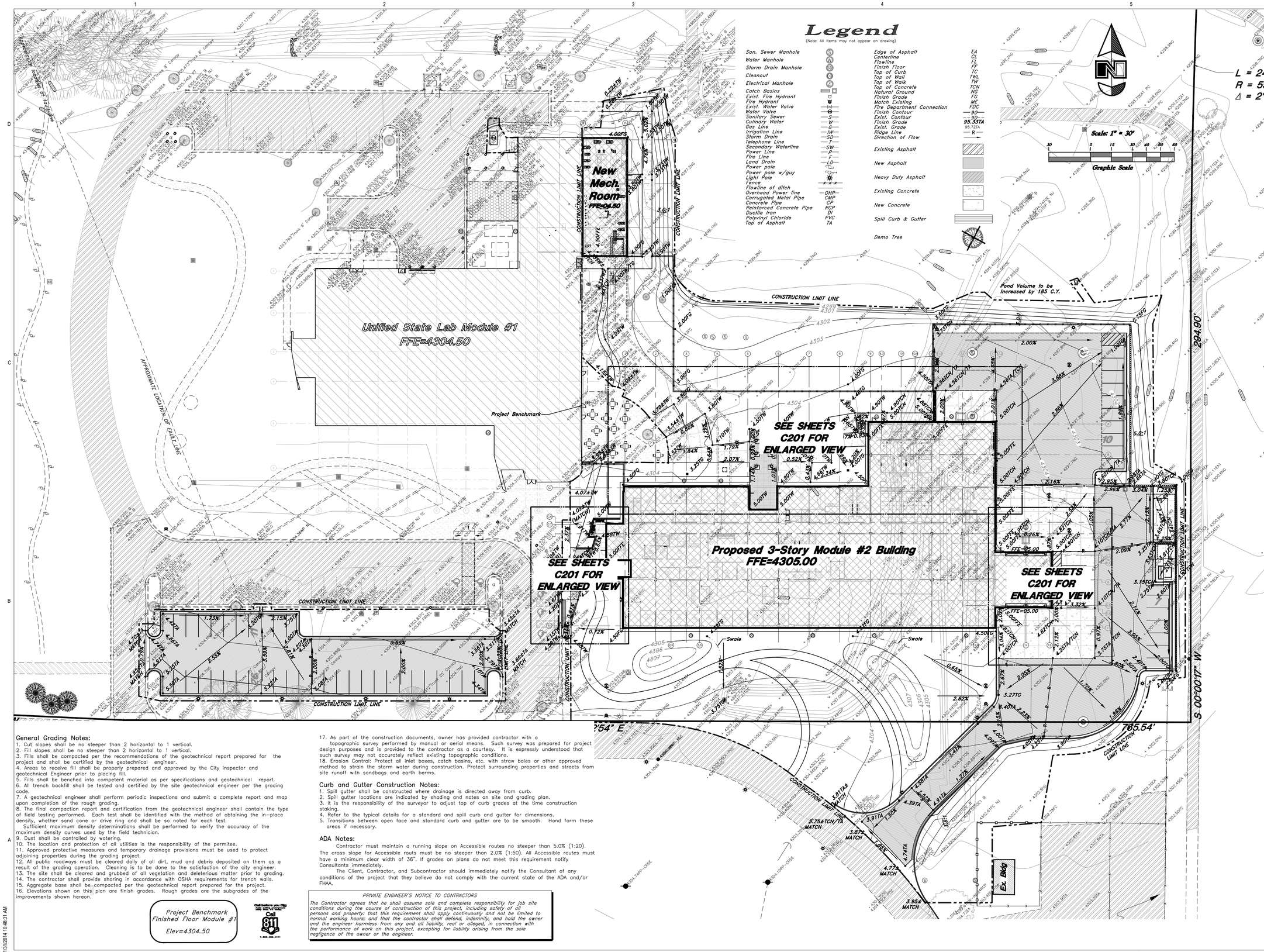

General Grading Notes:

1. Cut slopes shall be no steeper than 2 horizontal to 1 vertical.
2. Fill slopes shall be no steeper than 2 horizontal to 1 vertical.
3. Fills shall be compacted per the recommendations of the geotechnical report prepared for the project and shall be certified by the geotechnical engineer.
4. Areas to receive fill shall be properly prepared and approved by the City inspector and geotechnical Engineer prior to placing fill.
5. Fills shall be benched into competent material as per specifications and geotechnical report.
6. All trench backfill shall be tested and certified by the site geotechnical engineer per the grading code.
7. A geotechnical engineer shall perform periodic inspections and submit a complete report and map upon completion of the rough grading.
8. The final compaction report and certification from the geotechnical engineer shall contain the type of field testing performed. Each test shall be identified with the method of obtaining the in-place density, whether sand cone or drive ring and shall be so noted for each test.
   Sufficient maximum density determinations shall be performed to verify the accuracy of the maximum density curves used by the field technician.
9. Dust shall be controlled by watering.
10. The location and protection of all utilities is the responsibility of the permitee.
11. Approved protective measures and temporary drainage provisions must be used to protect adjoining properties during the grading project.
12. All public roadways must be cleared daily of all dirt, mud and debris deposited on them as a result of the grading operation. Cleaning is to be done to the satisfaction of the city engineer.
13. The site shall be cleared and grubbed of all vegetation and deleterious matter prior to grading.
14. The contractor shall provide shoring in accordance with OSHA requirements for trench walls.
15. Aggregate base shall be compacted per the geotechnical report prepared for the project.
16. Elevations shown on this plan are finish grades. Rough grades are the subgrades of the improvements shown hereon.
17. As part of the construction documents, owner has provided contractor with a topographic survey performed by manual or aerial means. Such survey was prepared for project design purposes and is provided to the contractor as a courtesy. It is expressly understood that such survey may not accurately reflect existing topographic conditions.
18. Erosion Control: Protect all inlet boxes, catch basins, etc. with straw bales or other approved method to strain the storm water during construction. Protect surrounding properties and streets from site runoff with sandbags and earth berms.

Curb and Gutter Construction Notes:

1. Spill gutter shall be constructed where drainage is directed away from curb.
2. Spill gutter locations are indicated by shading and notes on site and grading plan.
3. It is the responsibility of the surveyor to adjust top of curb grades at the time construction staking.
4. Refer to the typical details for a standard and spill curb and gutter for dimensions.
5. Transitions between open face and standard curb and gutter are to be smooth. Hand form these areas if necessary.

ADA Notes:

Contractor must maintain a running slope on Accessible routes no steeper than 5.0% (1:20). The cross slope for Accessible routes must be no steeper than 2.0% (1:50). All Accessible routes must have a minimum clear width of 36". If grades on plans do not meet this requirement notify Consultants immediately.

The Client, Contractor, and Subcontractor should immediately notify the Consultant of any conditions of the project that they believe do not comply with the current state of the ADA and/or FHAA.

Project Benchmark
Finished Floor Module #1
Elev=4304.50

Call before you Dig
Call 811
1-800-662-4111

PRIVATE ENGINEER'S NOTICE TO CONTRACTORS

The Contractor agrees that he shall assume sole and complete responsibility for job site conditions during the course of construction of this project, including safety of all persons and property; that this requirement shall apply continuously and not be limited to normal working hours; and that the contractor shall defend, indemnify, and hold the owner and the engineer harmless from any and all liability, real or alleged, in connection with the performance of work on this project, excepting for liability arising from the sole negligence of the owner or the engineer.

CRSA
649 E. South Temple
Salt Lake City, UT 84102
801.355.5915

MWL
11798 N. Lakeridge Pkwy.
Ashland, VA 23005
804-228-7473

State of Utah
Department of Administrative Services
Division of Facilities Construction & Management
4110 State Office Building
Salt Lake City, Utah 84114
Phone: (801) 538 - 3018
Fax: (801) 538 - 3267

DIVISION OF FACILITIES CONSTRUCTION AND MANAGEMENT
REVIEWED FOR CODE COMPLIANCE
SIGNATURE: Eric Galt
DATE: 08-05-2014

PROFESSIONAL ENGINEER
774290
ALBERT COURY MORRIS
4-21-14
STATE OF UTAH

ARCHITECT-ENGINEER STAMP

Unified State Laboratory Module 2

4451 South 2700 West, Taylorsville, UT 84118

DFCM #:	13020300
Project #:	B13-024

DATE:	ISSUE TYPE:
April 21, 2014	BID SET

CHECKED BY	C. MORRIS
DRAWN BY	R. CHILD

GRADING & DRAINAGE PLAN

C200

VOLUME 1

C:\Users\fernando\Documents_A_13024_Modl1_2013_fernando.rvt
1/31/2014 10:48:31 AM

W:\13N904 Unified State Labs Module #2\dwg\13N904-S4.dwg, 4/18/2014 2:40:01 PM, RebeccaC, 1:1

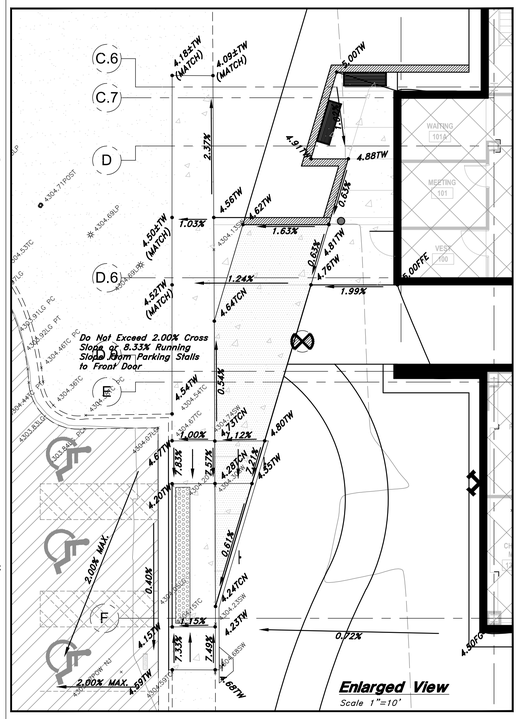

Legend

(Note: All items may not appear on drawing)

San. Sewer Manhole	S	Edge of Asphalt	EA
Water Manhole	W	Centerline	CL
Storm Drain Manhole	SD	Flowline	FL
Cleanout	CO	Finish Floor	FF
Electrical Manhole	E	Top of Curb	TC
Catch Basins		Top of Wall	TWL
Exist. Fire Hydrant		Top of Walk	TW
Fire Hydrant		Top of Concrete	TCN
Exist. Water Valve	WV	Natural Ground	NG
Water Valve	WV	Finish Grade	FG
Sanitary Sewer	—S—	Match Existing	ME
Culinary Water	—W—	Fire Department Connection	FDC
Gas Line	—G—	Finish Contour	—90—
Irrigation Line	—IW—	Exist. Contour	—90—
Storm Drain	—SD—	Finish Grade	95.33TA
Telephone Line	—T—	Exist. Grade	95.727A
Secondary Waterline	—SW—	Ridge Line	—R—
Power Line	—P—	Direction of Flow	
Fire Line	—F—	Existing Asphalt	
Land Drain	—LD—	New Asphalt	
Power pole		Heavy Duty Asphalt	
Power pole w/guy		Existing Concrete	
Light Pole		New Concrete	
Fence	x x x	Spill Curb & Gutter	
Flowline of ditch		Demo Tree	
Overhead Power line	—OHP—		
Corrugated Metal Pipe	CMP		
Concrete Pipe	CP		
Reinforced Concrete Pipe	RCP		
Ductile Iron	DI		
Polyvinyl Chloride	PVC		
Top of Asphalt	TA		

General Grading Notes:

1. Cut slopes shall be no steeper than 2 horizontal to 1 vertical.
2. Fill slopes shall be no steeper than 2 horizontal to 1 vertical.
3. Fills shall be compacted per the recommendations of the geotechnical report prepared for the project and shall be certified by the geotechnical engineer.
4. Areas to receive fill shall be properly prepared and approved by the City inspector and geotechnical Engineer prior to placing fill.
5. Fills shall be benched into competent material as per specifications and geotechnical report.
6. All trench backfill shall be tested and certified by the site geotechnical engineer per the grading code.
7. A geotechnical engineer shall perform periodic inspections and submit a complete report and map upon completion of the rough grading.
8. The final compaction report and certification from the geotechnical engineer shall contain the type of field testing performed. Each test shall be identified with the method of obtaining the in-place density, whether sand cone or drive ring and shall be so noted for each test.
Sufficient maximum density determinations shall be performed to verify the accuracy of the maximum density curves used by the field technician.
9. Dust shall be controlled by watering.
10. The location and protection of all utilities is the responsibility of the permitee.
11. Approved protective measures and temporary drainage provisions must be used to protect adjoining properties during the grading project.
12. All public roadways must be cleared daily of all dirt, mud and debris deposited on them as a result of the grading operation. Cleaning is to be done to the satisfaction of the city engineer.
13. The site shall be cleared and grubbed of all vegetation and deleterious matter prior to grading.
14. The contractor shall provide shoring in accordance with OSHA requirements for trench walls.
15. Aggregate base shall be compacted per the geotechnical report prepared for the project.
16. Elevations shown on this plan are finish grades. Rough grades are the subgrades of the improvements shown hereon.
17. As part of the construction documents, owner has provided contractor with a topographic survey performed by manual or aerial means. Such survey was prepared for project design purposes and is provided to the contractor as a courtesy. It is expressly understood that such survey may not accurately reflect existing topographic conditions.
18. Erosion Control: Protect all inlet boxes, catch basins, etc. with straw bales or other approved method to strain the storm water during construction. Protect surrounding properties and streets from site runoff with sandbags and earth berms.

Project Benchmark
Finished Floor Module #1

Elev=4304.50

Call Before you Dig
Call 811
1-800-662-4111

Curb and Gutter Construction Notes:

1. Spill gutter shall be constructed where drainage is directed away from curb.
2. Spill gutter locations are indicated by shading and notes on site and grading plan.
3. It is the responsibility of the surveyor to adjust top of curb grades at the time construction staking.
4. Refer to the typical details for a standard and spill curb and gutter for dimensions.
5. Transitions between open face and standard curb and gutter are to be smooth. Hand form these areas if necessary.

ADA Notes:

Contractor must maintain a running slope on Accessible routes no steeper than 5.0% (1:20). The cross slope for Accessible routs must be no steeper than 2.0% (1:50). All Accessible routes must have a minimum clear width of 36". If grades on plans do not meet this requirement notify Consultants immediately.

The Client, Contractor, and Subcontractor should immediately notify the Consultant of any conditions of the project that they believe do not comply with the current state of the ADA and/or FHAA.

PRIVATE ENGINEER'S NOTICE TO CONTRACTORS

The Contractor agrees that he shall assume sole and complete responsibility for job site conditions during the course of construction of this project, including safety of all persons and property: that this requirement shall apply continuously and not be limited to normal working hours; and that the contractor shall defend, indemnify, and hold the owner and the engineer harmless from any and all liability, real or alleged, in connection with the performance of work on this project, excepting for liability arising from the sole negligence of the owner or the engineer.

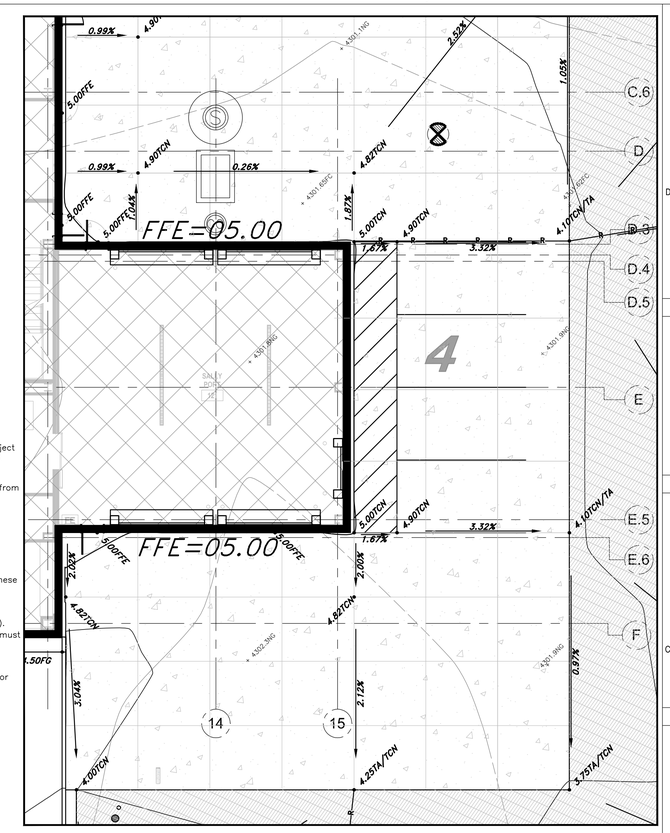

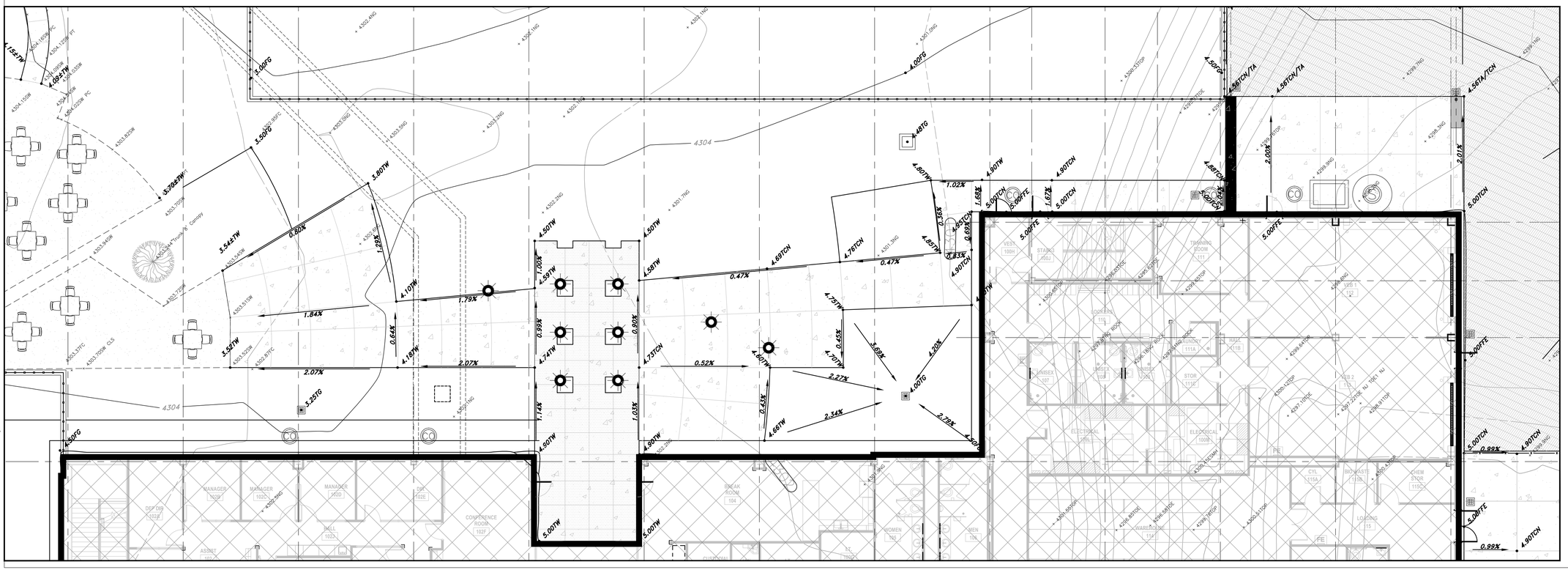

CRSA
649 E. South Temple
Salt Lake City, UT 84102
801.355.5915

MWL
11798 N. Lakeridge Pkwy.
Ashland, VA 23005
804-228-7473

State of Utah
Department of Administrative Services
Division of Facilities Construction & Management
4110 State Office Building
Salt Lake City, Utah 84114
Phone: (801) 538 - 3018
Fax: (801) 538 - 3267

DIVISION OF FACILITIES CONSTRUCTION AND MANAGEMENT
REVIEWED FOR CODE COMPLIANCE
SIGNATURE: Ernie Gallegos
DATE: 08-05-2014

PROFESSIONAL ENGINEER
774290
ALBERT COURY MORRIS
4-21-14
STATE OF UTAH

ARCHITECT-ENGINEER STAMP

Unified State Laboratory Module 2

4451 South 2700 West,
Taylorsville, UT 84118

DFCM #:	13020300
Project #:	B13-024

DATE:	ISSUE TYPE:
April 21, 2014	BID SET
CHECKED BY	C. MORRIS
DRAWN BY	R. CHILD

PARTIAL GRADING & DRAINAGE PLAN

C201

VOLUME 1

C:\Users\fernando\Documents_A_13024_Modl1_2013_fernando.rvt
1/31/2014 10:48:31 AM

W:\13N904 Unified State Labs Module #2\dwg\13N904-S4.dwg, 4/18/2014 2:40:10 PM, RebeccaC, 1:1

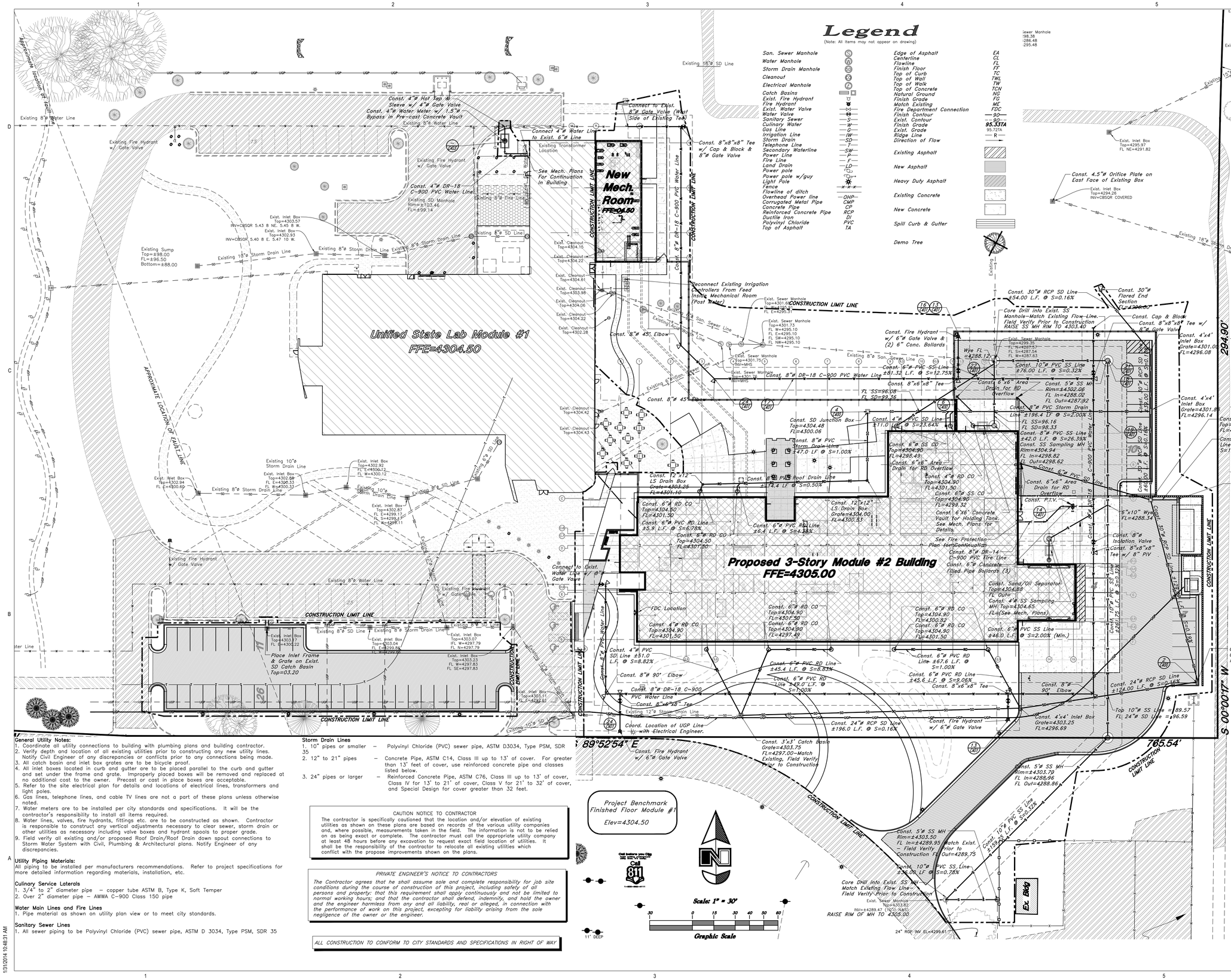

General Utility Notes:

1. Coordinate all utility connections to building with plumbing plans and building contractor.
2. Verify depth and location of all existing utilities prior to constructing any new utility lines. Notify Civil Engineer of any discrepancies or conflicts prior to any connections being made.
3. All catch basin and inlet box grates are to be bicycle proof.
4. All inlet boxes located in curb and gutter are to be placed parallel to the curb and gutter and set under the frame and grate. Improperly placed boxes will be removed and replaced at no additional cost to the owner. Precast or cast in place boxes are acceptable.
5. Refer to the site electrical plan for details and locations of electrical lines, transformers and light poles.
6. Gas lines, telephone lines, and cable TV lines are not a part of these plans unless otherwise noted.
7. Water meters are to be installed per city standards and specifications. It will be the contractor's responsibility to install all items required.
8. Water lines, valves, fire hydrants, fittings etc. are to be constructed as shown. Contractor is responsible to construct any vertical adjustments necessary to clear sewer, storm drain or other utilities as necessary including valve boxes and hydrant spools to proper grade.
9. Field verify all existing and/or proposed Roof Drain/Roof Drain down spout connections to Storm Water System with Civil, Plumbing & Architectural plans. Notify Engineer of any discrepancies.

Utility Piping Materials:
All piping to be installed per manufacturers recommendations. Refer to project specifications for more detailed information regarding materials, installation, etc.

Culinary Service Laterals

1. 3/4" to 2" diameter pipe – copper tube ASTM B, Type K, Soft Temper
2. Over 2" diameter pipe – AWWA C-900 Class 150 pipe

Water Main Lines and Fire Lines

1. Pipe material as shown on utility plan view or to meet city standards.

Sanitary Sewer Lines

1. All sewer piping to be Polyvinyl Chloride (PVC) sewer pipe, ASTM D 3034, Type PSM, SDR 35

Storm Drain Lines

1. 10" pipes or smaller – Polyvinyl Chloride (PVC) sewer pipe, ASTM D3034, Type PSM, SDR 35
2. 12" to 21" pipes – Concrete Pipe, ASTM C14, Class III up to 13' of cover. For greater than 13' feet of cover, use reinforced concrete pipe and classes listed below.
3. 24" pipes or larger – Reinforced Concrete Pipe, ASTM C76, Class III up to 13' of cover, Class IV for 13' to 21' of cover, Class V for 21' to 32' of cover, and Special Design for cover greater than 32 feet.

CAUTION NOTICE TO CONTRACTOR

The contractor is specifically cautioned that the location and/or elevation of existing utilities as shown on these plans are based on records of the various utility companies and, where possible, measurements taken in the field. The information is not to be relied on as being exact or complete. The contractor must call the appropriate utility company at least 48 hours before any excavation to request exact field location of utilities. It shall be the responsibility of the contractor to relocate all existing utilities which conflict with the propose improvements shown on the plans.

PRIVATE ENGINEER'S NOTICE TO CONTRACTORS

The Contractor agrees that he shall assume sole and complete responsibility for job site conditions during the course of construction of this project, including safety of all persons and property; that this requirement shall apply continuously and not be limited to normal working hours; and that the contractor shall defend, indemnify, and hold the owner and the engineer harmless from any and all liability, real or alleged, in connection with the performance of work on this project, excepting for liability arising from the sole negligence of the owner or the engineer.

ALL CONSTRUCTION TO CONFORM TO CITY STANDARDS AND SPECIFICATIONS IN RIGHT OF WAY

C:\Users\fernando\Documents_A_13024_Modl_2013_fernando.rvt
1/31/2014 10:48:31 AM

W:\13N904 Unified State Labs Module #2\dwg\13N904-S4.dwg, 4/18/2014 2:40:16 PM, RebeccaC, 1:1

CRSA
649 E. South Temple
Salt Lake City, UT 84102
801.355.5915

MWL
11798 N. Lakeridge Pkwy.
Ashland, VA 23005
804-228-7473

State of Utah
Department of Administrative Services
Division of Facilities Construction & Management
4110 State Office Building
Salt Lake City, Utah 84114
Phone: (801) 538 - 3018
Fax: (801) 538 - 3267

DIVISION OF FACILITIES CONSTRUCTION AND MANAGEMENT
REVIEWED FOR CODE COMPLIANCE
SIGNATURE: Ernie Gallo
DATE: 08-05-2014

PROFESSIONAL ENGINEER
724907
ALBERT COURY MORRIS
11-21-14
STATE OF UTAH

ARCHITECT-ENGINEER STAMP

Unified State Laboratory Module 2

4451 South 2700 West,
Taylorsville, UT 84118

DFCM #:	13020300
Project #:	B13-024
DATE:	ISSUE TYPE:
April 21, 2014	BID SET
CHECKED BY	C. MORRIS
DRAWN BY	R. CHILD

UTILITY PLAN

C300
VOLUME 1

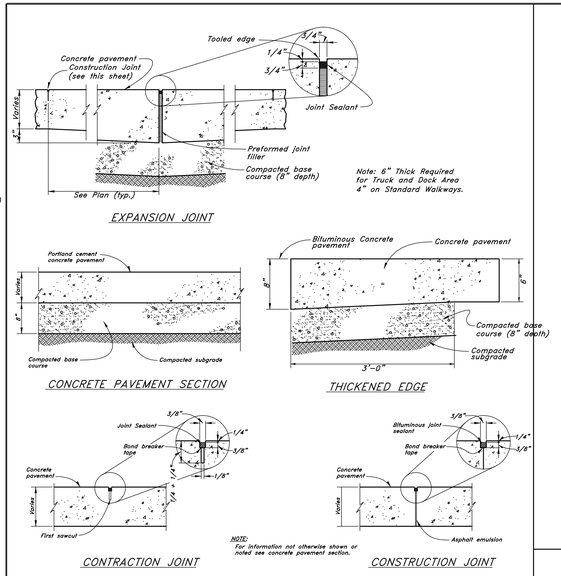

1 Portland Cement Concrete Pavement

Not to Scale

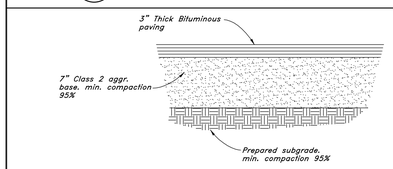

5 Typical Bituminous Pavement Section Parking Areas

Not to Scale

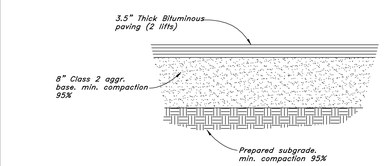

7 Typical Bituminous Pavement Section Heavy Duty Drives

Not to Scale

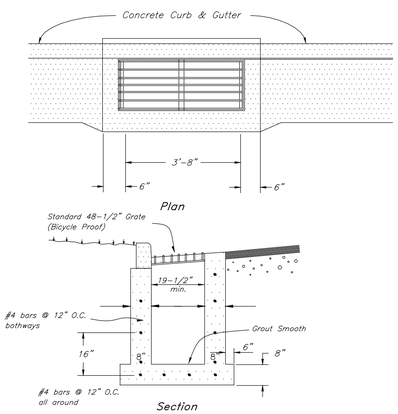

2 Typical Inlet Box

In curb & gutter

Not to Scale

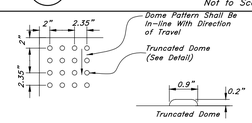

All Sidewalk Curb Ramps Shall Have Detectable Warning Surfaces That Extend The Full Width And Depth Of The Curb Ramp And In The Direction Of Travel 24 Inches From The Back Of Curb.
The detectible warnings on the curb ramps shall comply with ADA sections 4.29.2 and 4.7.7.

If Less Than 4.0' clearance Provide 1:15 Flares

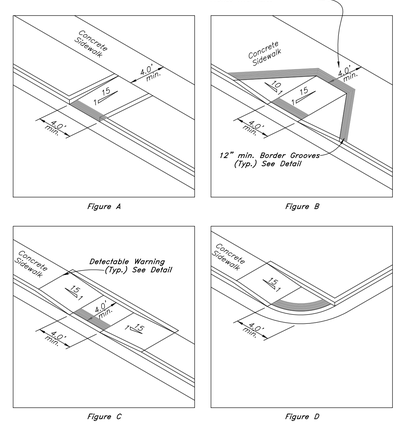

CONTINUOUS DETECTABLE WARNING TEXTURE @ ALL HAZARDOUS ROUTES.

NOTE: CURB HEIGHT VARIES, SEE CIVIL PLANS FOR ELEVATIONS.

8 Typical Handicap Ramp Detail

Not to Scale

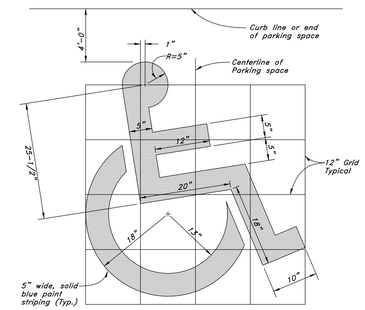

3 Handicap Symbol

Not to Scale

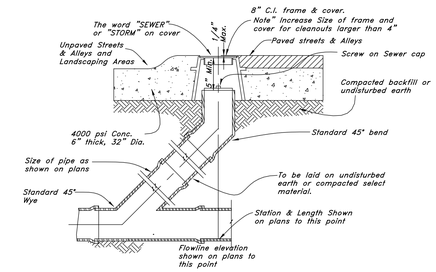

6 Sewer, Storm, and Roof Drain Cleanout Detail

Not to Scale

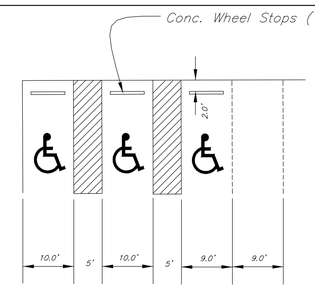

9 Typical Handicap Stall Detail

Not to Scale

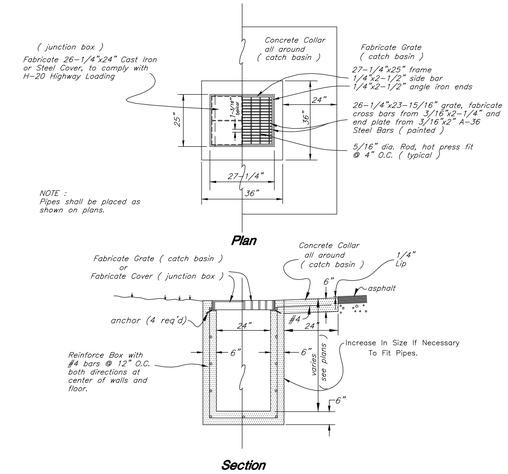

4 Typical Catch Basin Typical Junction Box

Not to Scale

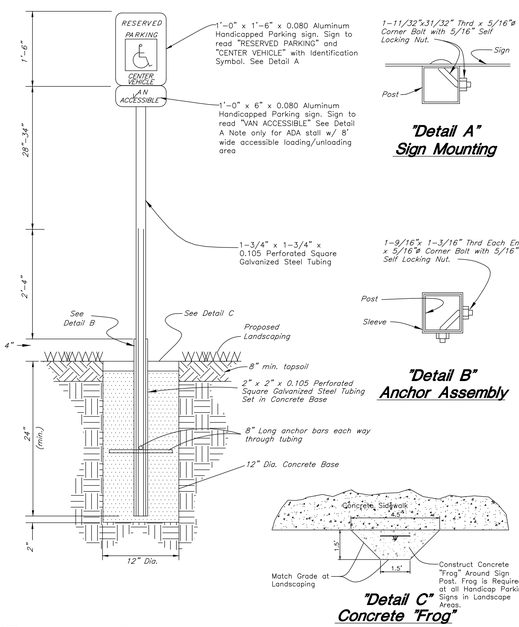

10 Typical Handicap Parking Sign

Not to Scale

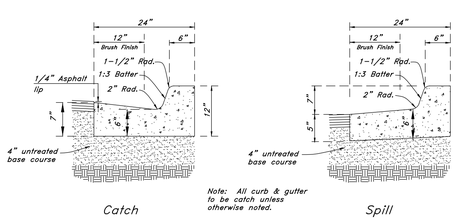

11 Typical Section - 24" Curb & Gutter

Not to Scale

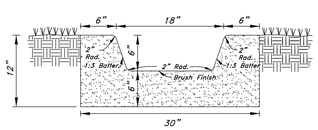

27 Typical U-Gutter

Not to Scale

CRSA
649 E. South Temple
Salt Lake City, UT 84102
801.355.5915

MWL
11798 N. Lakeridge Pkwy.
Ashland, VA 23005
804-228-7473

State of Utah
Department of Administrative Services
Division of Facilities Construction & Management
4110 State Office Building
Salt Lake City, Utah 84114
Phone: (801) 538 - 3018
Fax: (801) 538 - 3267

DIVISION OF FACILITIES CONSTRUCTION AND MANAGEMENT
REVIEWED FOR CODE COMPLIANCE
SIGNATURE: Eric Cable
DATE: 08-05-2014

PROFESSIONAL ENGINEER
774290
ALBERT COURY MORRIS
4-21-14
STATE OF UTAH

ARCHITECT-ENGINEER STAMP

Unified State Laboratory Module 2

4451 South 2700 West,
Taylorsville, UT 84118

DFCM #: 13020300

Project #: B13-024

DATE:	ISSUE TYPE:
April 21, 2014	BID SET

CHECKED BY	C. MORRIS
DRAWN BY	R. CHILD

CONSTRUCTION DETAIL -1

C400

VOLUME 1

C:\Users\fernando\Documents_A_13724_Modl_2013_fernando.rvt
1/31/2014 10:48:31 AM

W:\13N904 Unified State Labs Module #2\dwg\13N904-S4.dwg, 4/18/2014 2:40:22 PM, RebeccaC, 1:1

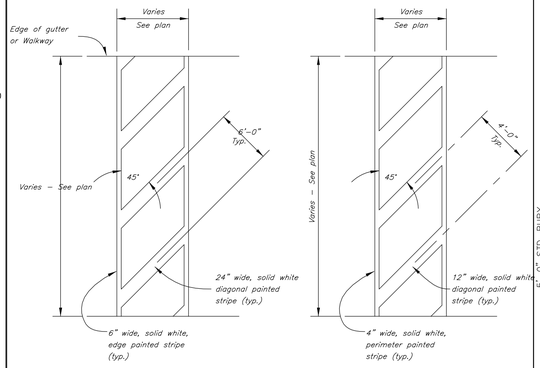

CROSSWALK **NO PARKING**

12 Striping

Not to Scale

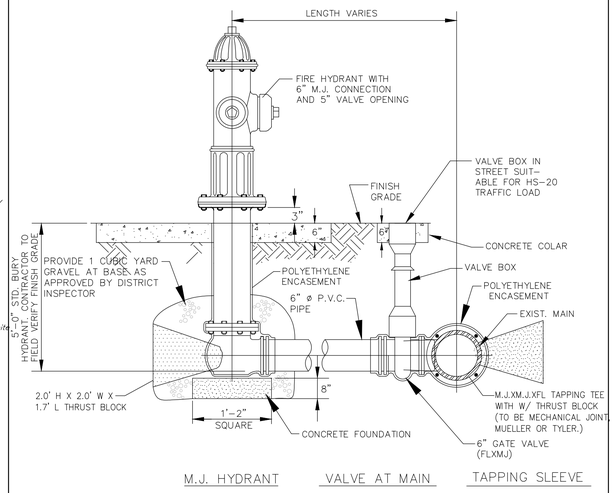

13 Fire Hydrant Connection Detail

TB-208

Not to Scale

This detail as prepared by the Design Professional as an instruments of service shall remain the property of the Design Professional. The Design Professional shall retain all common law, statutory and other reserved rights, including the copyright thereto.

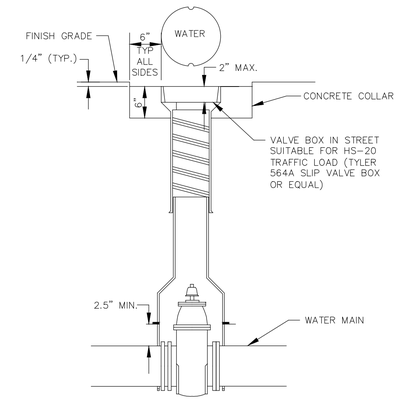

This detail as prepared by the Design Professional as an instruments of service shall remain the property of the Design Professional. The Design Professional shall retain all common law, statutory and other reserved rights, including the copyright thereto.

14 Typical Valve Box

TB-204

Not to Scale

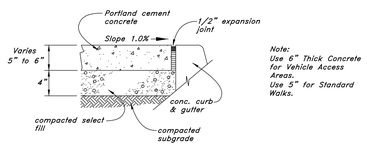

CROSS SECTION

Note:
Use 6" Thick Concrete for Vehicle Access Areas.
Use 5" for Standard Walks.

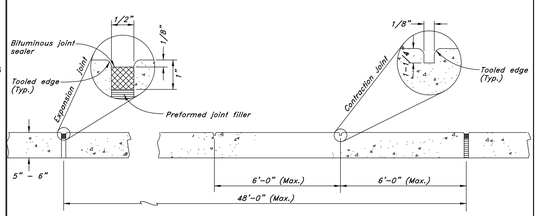

ELEVATION

15 Concrete Sidewalk

Not to Scale

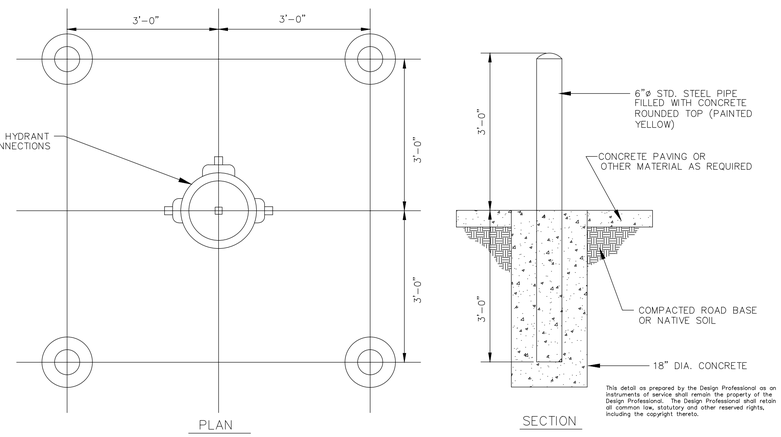

This detail as prepared by the Design Professional as an instruments of service shall remain the property of the Design Professional. The Design Professional shall retain all common law, statutory and other reserved rights, including the copyright thereto.

16 Fire Hydrant With Stanchions Detail

TB-211

Not to Scale

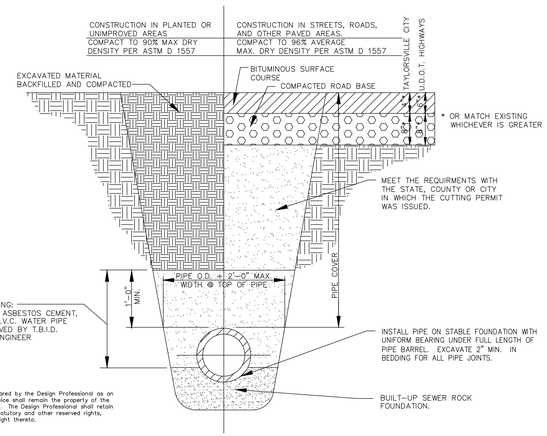

This detail as prepared by the Design Professional as an instruments of service shall remain the property of the Design Professional. The Design Professional shall retain all common law, statutory and other reserved rights, including the copyright thereto.

17 Typical Water Trench Section @ Grade

TB-201

Not to Scale

CRSA
649 E. South Temple
Salt Lake City, UT 84102
801.355.5915

MWL
11798 N. Lakeridge Pkwy.
Ashland, VA 23005
804-228-7473

State of Utah
Department of Administrative Services
Division of Facilities Construction & Management
4110 State Office Building
Salt Lake City, Utah 84114
Phone: (801) 538 - 3018
Fax: (801) 538 - 3267

DIVISION OF FACILITIES CONSTRUCTION AND MANAGEMENT
REVIEWED FOR CODE COMPLIANCE
SIGNATURE: Ernie Gulf
DATE: 08-05-2014

PROFESSIONAL ENGINEER
7742907
ALBERT COURY MORRIS
4-21-14
STATE OF UTAH

ARCHITECT-ENGINEER STAMP

Unified State Laboratory Module 2

4451 South 2700 West, Taylorsville, UT 84118

DFCM #: 13020300

Project #: B13-024

DATE:	ISSUE TYPE:
April 21, 2014	BID SET

CHECKED BY	C. MORRIS
DRAWN BY	R. CHILD

CONSTRUCTION DETAIL -2

C401

VOLUME 1

C:\Users\fernando\Documents_A_13024_Modl_2013_fernando.rvt
1/31/2014 10:48:31 AM

W:\13N904 Unified State Labs Module #2\dwg\13N904-S4.dwg, 4/18/2014 2:40:24 PM, RebeccaC, 1:1

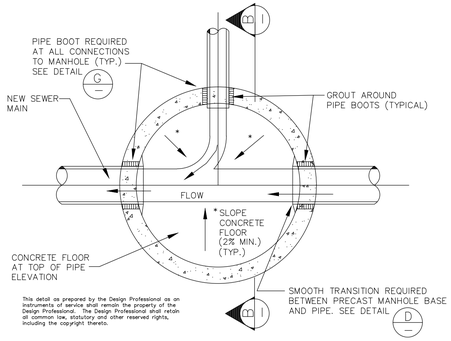

This detail as prepared by the Design Professional as an instruments of service shall remain the property of the Design Professional. The Design Professional shall retain all common law, statutory and other reserved rights, including the copyright thereto.

18 Typical Precast Manhole Plan

TB-104-A
Not to Scale

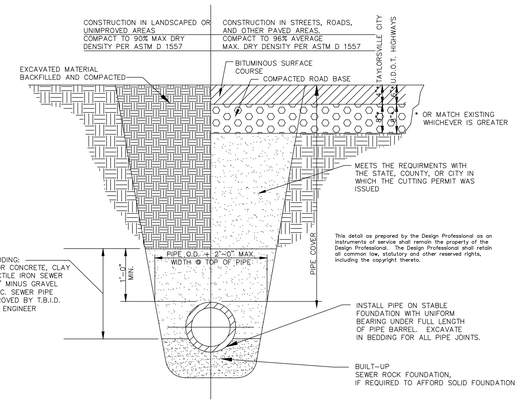

This detail as prepared by the Design Professional as an instruments of service shall remain the property of the Design Professional. The Design Professional shall retain all common law, statutory and other reserved rights, including the copyright thereto.

19 Typical Sewer Trench Section @ Grade

TB-101
Not to Scale

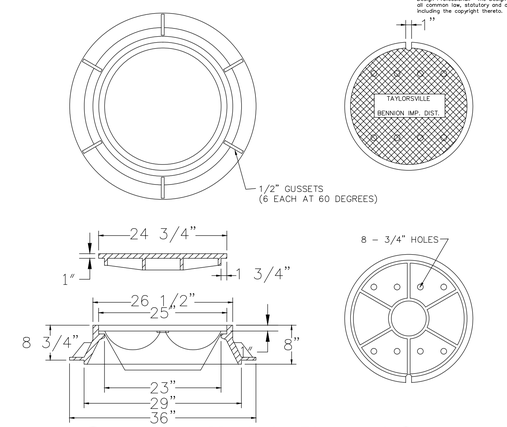

This detail as prepared by the Design Professional as an instruments of service shall remain the property of the Design Professional. The Design Professional shall retain all common law, statutory and other reserved rights, including the copyright thereto.

20 Manhole Ring and Cover

TB-104-C
Not to Scale

NOTE: MANHOLE REQUIRED ON ALL SEWER MAIN STUB ENDS.

NOTES:

1. MANHOLE CONE SHALL BE CONCENTRIC UNLESS NOTED OTHERWISE ON PLANS.
2. NO STEPS IN CONE OR MANHOLE WALL.
3. MANHOLE SHALL BE 5'-0" ø IF SEWER MAIN IS GREATER THAN 10" ø, OR IF THREE OR MORE SEWER MAIN PIPES CONNECT TO MANHOLE, OR IF OTHERWISE SPECIFIED ON DRAWINGS
3. ALL MANHOLES WILL BE AIR TESTED.

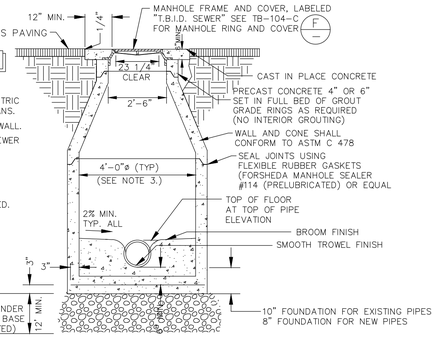

This detail as prepared by the Design Professional as an instruments of service shall remain the property of the Design Professional. The Design Professional shall retain all common law, statutory and other reserved rights, including the copyright thereto.

21 Typical Manhole Section

TB-104-B (SEE ALSO TB-108)
Not to Scale

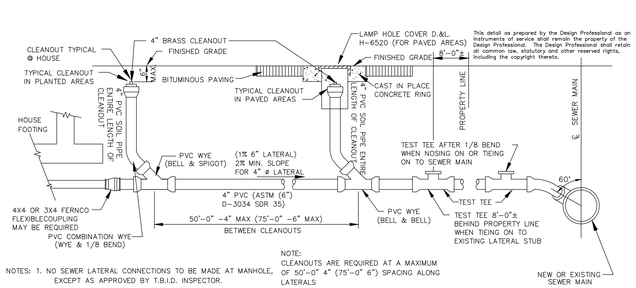

NOTES: 1. NO SEWER LATERAL CONNECTIONS TO BE MADE AT MANHOLE, EXCEPT AS APPROVED BY T.B.I.D. INSPECTOR.

NOTE: CLEANOUTS ARE REQUIRED AT A MAXIMUM OF 50'-0" 4" (75'-0" 6") SPACING ALONG LATERALS

This detail as prepared by the Design Professional as an instruments of service shall remain the property of the Design Professional. The Design Professional shall retain all common law, statutory and other reserved rights, including the copyright thereto.

22 Profile of Typical Sewer Lateral

TB-102
Not to Scale

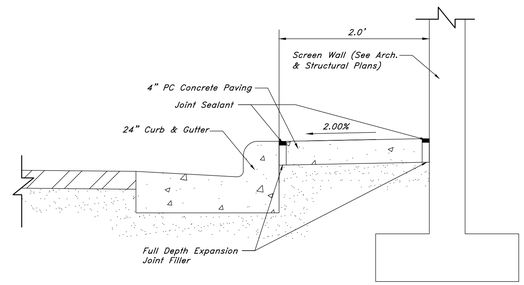

23 Section A-A

Not to Scale

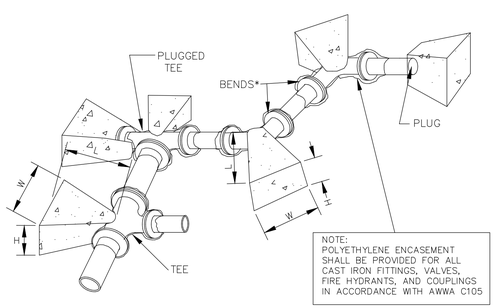

THRUST BLOCK SCHEDULE

SOIL BEARING PRESSURE = 1,500 PSF
TEST PRESSURE = 200 PSI

FITTING	WIDTH	HEIGHT	LENGTH
8" 90° BEND	3.50'	3.50'	3.00'
8" TEE/DEAD (NATIVE SOIL)	3.00'	3.00'	2.50'

This detail as prepared by the Design Professional as an instruments of service shall remain the property of the Design Professional. The Design Professional shall retain all common law, statutory and other reserved rights, including the copyright thereto.

24 Thrust Blocking

TB-202
Not to Scale

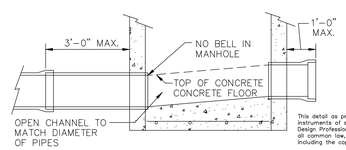

This detail as prepared by the Design Professional as an instruments of service shall remain the property of the Design Professional. The Design Professional shall retain all common law, statutory and other reserved rights, including the copyright thereto.

25 Section Through Manhole Base

TB-105 (SEE ALSO TB-104-A, TB-104-B)
Not to Scale

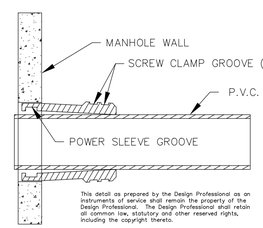

NOTES:

1. 2 SCREW CLAMPS REQUIRED ONLY ON PIPE LARGER THAN 14" O.D.
2. WORK AND MATERIALS SHALL CONFORM TO ASTM C923.
3. FOR CONCRETE PIPE, A RUBBER BOOT IS REQUIRED.

This detail as prepared by the Design Professional as an instruments of service shall remain the property of the Design Professional. The Design Professional shall retain all common law, statutory and other reserved rights, including the copyright thereto.

26 Connection of PVC Sewer Pipe to Pre-Cast Manhole Base

TB-106
Not to Scale

CRSA
649 E. South Temple
Salt Lake City, UT 84102
801.355.5915

MWL
11798 N. Lakeridge Pkwy.
Ashland, VA 23005
804-228-7473

State of Utah
Department of Administrative Services
Division of Facilities Construction & Management
4110 State Office Building
Salt Lake City, Utah 84114
Phone: (801) 538 - 3018
Fax: (801) 538 - 3267

DIVISION OF FACILITIES CONSTRUCTION AND MANAGEMENT
REVIEWED FOR CODE COMPLIANCE
SIGNATURE: Ernie Gulf
DATE: 08-05-2014

PROFESSIONAL ENGINEER
774290
ALBERT COURY MORRIS
4-21-14
STATE OF UTAH

ARCHITECT-ENGINEER STAMP

Unified State Laboratory Module 2

4451 South 2700 West, Taylorsville, UT 84118

DFCM #: 13020300
Project #: B13-024

DATE:	ISSUE TYPE:
April 21, 2014	BID SET
CHECKED BY	C. MORRIS
DRAWN BY	R. CHILD

CONSTRUCTION DETAIL -3

C402

VOLUME 1

C:\Users\fernando\Documents_A_13024_Modll_2013_fernando.rvt
1/31/2014 10:48:31 AM

W:\13N904 Unified State Labs Module #2\dwg\13N904-S4.dwg, 4/18/2014 2:40:25 PM, RebeccaC, 1:1

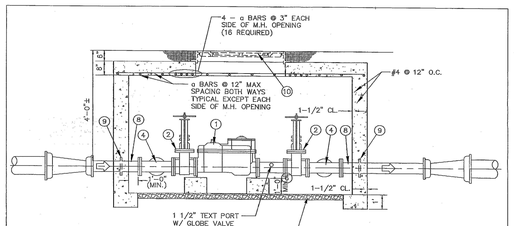

SECTION – SIDE VIEW

METER BOX DETAIL

N.T.S. TB-222 (SEE ALSO TB-221, TB-225)

This detail as prepared by the Design Professional as an instrument of service shall remain the property of the Design Professional. The Design Professional shall retain all common law, statutory and other reserved rights, including the copyright thereto.

12/97

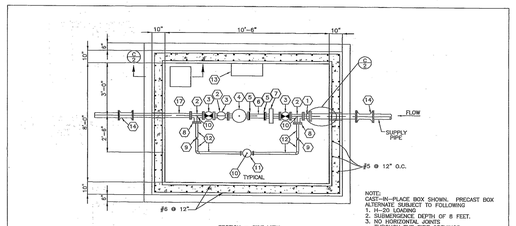

SECTION – SIDE VIEW

NOTE:
CAST-IN-PLACE BOX SHOWN. PRECAST BOX ALTERNATE SUBJECT TO FOLLOWING
1. H-20 LOADING
2. SUBMERGENCE DEPTH OF 8 FEET.
3. NO HORIZONTAL JOINTS THROUGH THE PIPE OPENINGS.
4. WATER STOP @ WALL/FLOOR JOINT.

MARK	QUANITY	DESCRIPTION
1	1	4" x 3" FL REDUCER
2	3	3" FL TEE
3	2	3" FL BRASS BALL VALVE
4	1	METER
5	2	3" METALLIC FLANGE ADAPTOR
6	1	3" x 1'-0" LONG GROOVED END DI PIPE (CLASS 55 MIN.)
7	1	3" FL PLATE STRINNER
8	2	3" FL x 1 1/2" THREADED
9	2	1 1/2" THREADED BRASS BALL VALVE
10	4	PIPE SUPPORT
11	1	1 1/2" FL BYPASS METER
12	–	1 1/2" COPPER PIPE
13	–	POLYPROPLYNE MANHOLE STEPS
14	2	MJ SOLID SLEEVES W/ MEGA LUG RESTRAINTS
15	1	3" FL x 3" THREADED
16	1	3" THREADED BRASS PLUG
17	1	3" FL x PE DI PIPE
18	1	4" FL x PE DI PIPE

3" METER VAULT

N.T.S. TB-222-A

This detail as prepared by the Design Professional as an instrument of service shall remain the property of the Design Professional. The Design Professional shall retain all common law, statutory and other reserved rights, including the copyright thereto.

12/97

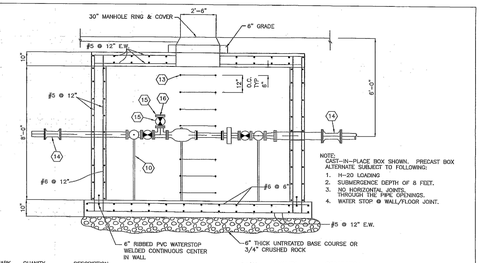

NOTE:
CAST-IN-PLACE BOX SHOWN. PRECAST BOX ALTERNATE SUBJECT TO FOLLOWING:
1. H-20 LOADING
2. SUBMERGENCE DEPTH OF 8 FEET.
3. NO HORIZONTAL JOINTS THROUGH THE PIPE OPENINGS.
4. WATER STOP @ WALL/FLOOR JOINT.

MARK	QUANITY	DESCRIPTION
1	1	4" x 3" FL REDUCER
2	3	3" FL TEE
3	2	3" FL BRASS BALL VALVE
4	1	METER
5	2	3" METALLIC FLANGE ADAPTOR
6	1	3" x 1'-0" LONG GROOVED END DI PIPE (CLASS 55 MIN)
7	1	3" FL PLATE STRINNER
8	2	3" FL x 1 1/2" THREADED
9	2	1 1/2" THREADED BRASS BALL VALVE
10	4	PIPE SUPPORT
11	1	1 1/2" FL BYPASS METER
12	–	1 1/2" COPPER PIPE
13	–	POLYPROPLYNE MANHOLE STEPS
14	2	MJ SOLID SLEEVES W/ MEGA LUG RESTRAINTS
15	1	3" FL x 3" THREADED
16	1	3" THREADED BRASS PLUG
17	1	3" FL x PE DI PIPE
18	1	4" FL x PE DI PIPE

3" METER VAULT

N.T.S. TB-222-B

This detail as prepared by the Design Professional as an instrument of service shall remain the property of the Design Professional. The Design Professional shall retain all common law, statutory and other reserved rights, including the copyright thereto.

9/96

ADJUSTABLE PIPE SADDLE SUPPORT SCHEDULE
DIMENSIONS IN INCHES

PIPE	A	B	C	D MINIMUM	D MAXIMUM
2 1/2	2 1/2	1 1/2	9	6	13
3	2 1/2	1 1/2	9	8 1/2	13 1/2
3 1/2	2 1/2	1 1/2	9	8 1/2	13 1/2
4	3	2 1/2	9	9 1/2	14
6	3	2 1/2	9	10 1/2	15 1/2
8	3	2 1/2	9	11 1/2	16 1/2
10	3	2 1/2	9	13 1/2	18 1/2
12	3	2 1/2	9	15	19 1/2

USE 2 1/2" SUPPORTS FOR PIPE LESS THAN 2 1/2"#

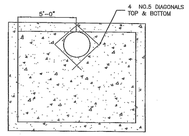

DECK SLAB PLAN VIEW

3" METER VAULT

N.T.S. TB-222-C

This detail as prepared by the Design Professional as an instrument of service shall remain the property of the Design Professional. The Design Professional shall retain all common law, statutory and other reserved rights, including the copyright thereto.

12/97

ADJUSTABLE PIPE SADDLE SUPPORT SCHEDULE
DIMENSIONS IN INCHES

PIPE	A	B	C	D MINIMUM	D MAXIMUM
2 1/2	2 1/2	1 1/2	9	6	13
3	2 1/2	1 1/2	9	8 1/2	13 1/2
3 1/2	2 1/2	1 1/2	9	8 1/2	13 1/2
4	3	2 1/2	9	9 1/2	14
6	3	2 1/2	9	10 1/2	15 1/2
8	3	2 1/2	9	11 1/2	16 1/2
10	3	2 1/2	9	13 1/2	18 1/2
12	3	2 1/2	9	15	19 1/2

USE 2 1/2" SUPPORTS FOR PIPE LESS THAN 2 1/2"#

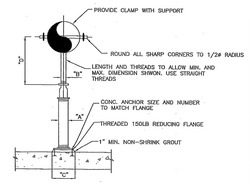

NOTES:
1. HOT DIP GALVANIZE AFTER FABRICATION
2. PIPE SHALL BE SCHEDULE 40

ADJUSTABLE PIPE SUPPORT

3" METER VAULT

N.T.S. TB-222-D

This detail as prepared by the Design Professional as an instrument of service shall remain the property of the Design Professional. The Design Professional shall retain all common law, statutory and other reserved rights, including the copyright thereto.

12/97

ADJUSTABLE PIPE SADDLE SUPPORT SCHEDULE
DIMENSIONS IN INCHES

PIPE	A	B	C	D MINIMUM	D MAXIMUM
2 1/2	2 1/2	1 1/2	9	6	13
3	2 1/2	1 1/2	9	8 1/2	13 1/2
3 1/2	2 1/2	1 1/2	9	8 1/2	13 1/2
4	3	2 1/2	9	9 1/2	14
6	3	2 1/2	9	10 1/2	15 1/2
8	3	2 1/2	9	11 1/2	16 1/2
10	3	2 1/2	9	13 1/2	18 1/2
12	3	2 1/2	9	15	19 1/2

USE 2 1/2" SUPPORTS FOR PIPE LESS THAN 2 1/2"#

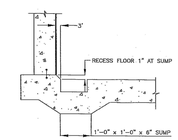

3" METER VAULT

N.T.S. TB-222-E

This detail as prepared by the Design Professional as an instrument of service shall remain the property of the Design Professional. The Design Professional shall retain all common law, statutory and other reserved rights, including the copyright thereto.

12/97

ADJUSTABLE PIPE SADDLE SUPPORT SCHEDULE
DIMENSIONS IN INCHES

PIPE	A	B	C	D MINIMUM	D MAXIMUM
2 1/2	2 1/2	1 1/2	9	6	13
3	2 1/2	1 1/2	9	8 1/2	13 1/2
3 1/2	2 1/2	1 1/2	9	8 1/2	13 1/2
4	3	2 1/2	9	9 1/2	14
6	3	2 1/2	9	10 1/2	15 1/2
8	3	2 1/2	9	11 1/2	16 1/2
10	3	2 1/2	9	13 1/2	18 1/2
12	3	2 1/2	9	15	19 1/2

USE 2 1/2" SUPPORTS FOR PIPE LESS THAN 2 1/2"#

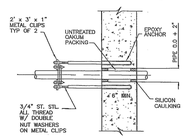

THRUST RESTRAINT

3" METER VAULT

N.T.S. TB-222-F

This detail as prepared by the Design Professional as an instrument of service shall remain the property of the Design Professional. The Design Professional shall retain all common law, statutory and other reserved rights, including the copyright thereto.

12/97

NOTE: Use 4" Meter with 1.5" bypass

CRSA
649 E. South Temple
Salt Lake City, UT 84102
801.355.5915

MWL
11798 N. Lakeridge Pkwy.
Ashland, VA 23005
804-228-7473

State of Utah
Department of Administrative Services
Division of Facilities Construction & Management
4110 State Office Building
Salt Lake City, Utah 84114
Phone: (801) 538 - 3018
Fax: (801) 538 - 3267

DIVISION OF FACILITIES CONSTRUCTION AND MANAGEMENT
REVIEWED FOR CODE COMPLIANCE
SIGNATURE: Ernie Calle
DATE: 08-05-2014

PROFESSIONAL ENGINEER
7742907
ALBERT COURY MORRIS
04-21-14
STATE OF UTAH

ARCHITECT-ENGINEER STAMP

Unified State Laboratory Module 2

4451 South 2700 West, Taylorsville, UT 84118

DFCM #: 13020300

Project #: B13-024

DATE:	ISSUE TYPE:
April 21, 2014	BID SET

CHECKED BY	C. MORRIS
DRAWN BY	R. CHILD

CONSTRUCTION DETAIL -4

C403

VOLUME 1

C:\Users\femando\Documents_A_13024_Modl_2013_femando.rvt
1/31/2014 10:48:31 AM

W:\13N904 Unified State Labs Module #2\dwg\13N904-S4.dwg, 4/18/2014 2:40:26 PM, RebeccaC, 1:1

SWPPP BMP's

1. CWM Construct BMP Concrete Waste Management
2. DC Utilize BMP Dust Control
3. EVWA Utilize BMP Equipment and Vehicle Wash Down Area
4. HWM Utilize BMP Hazardous Waste Management
5. IP Construct BMP Inlet Protection (Concrete Block or Gravel)
6. MS Utilize BMP Materials Storage
7. MU Utilize BMP Material Use
8. PLSV Utilize BMP Parking Lot Sweeping and Vacuuming
9. PEV Utilize Preservation of Existing Vegetation
10. PT Utilize BMP Portable Toilets
11. SCE Construct BMP Stabilized Construction Entrance
12. SCU Utilize BMP Spill Clean-Up
13. SF Construct BMP Silt Fence
14. VEC Utilize BMP Vehicle and Equipment Cleaning
15. VEF Construct BMP Vehicle and Equipment Fueling
16. WHD Utilize BMP Waste Handling and Disposal
17. TPS Construct BMP Temporary and Permanent Seeding

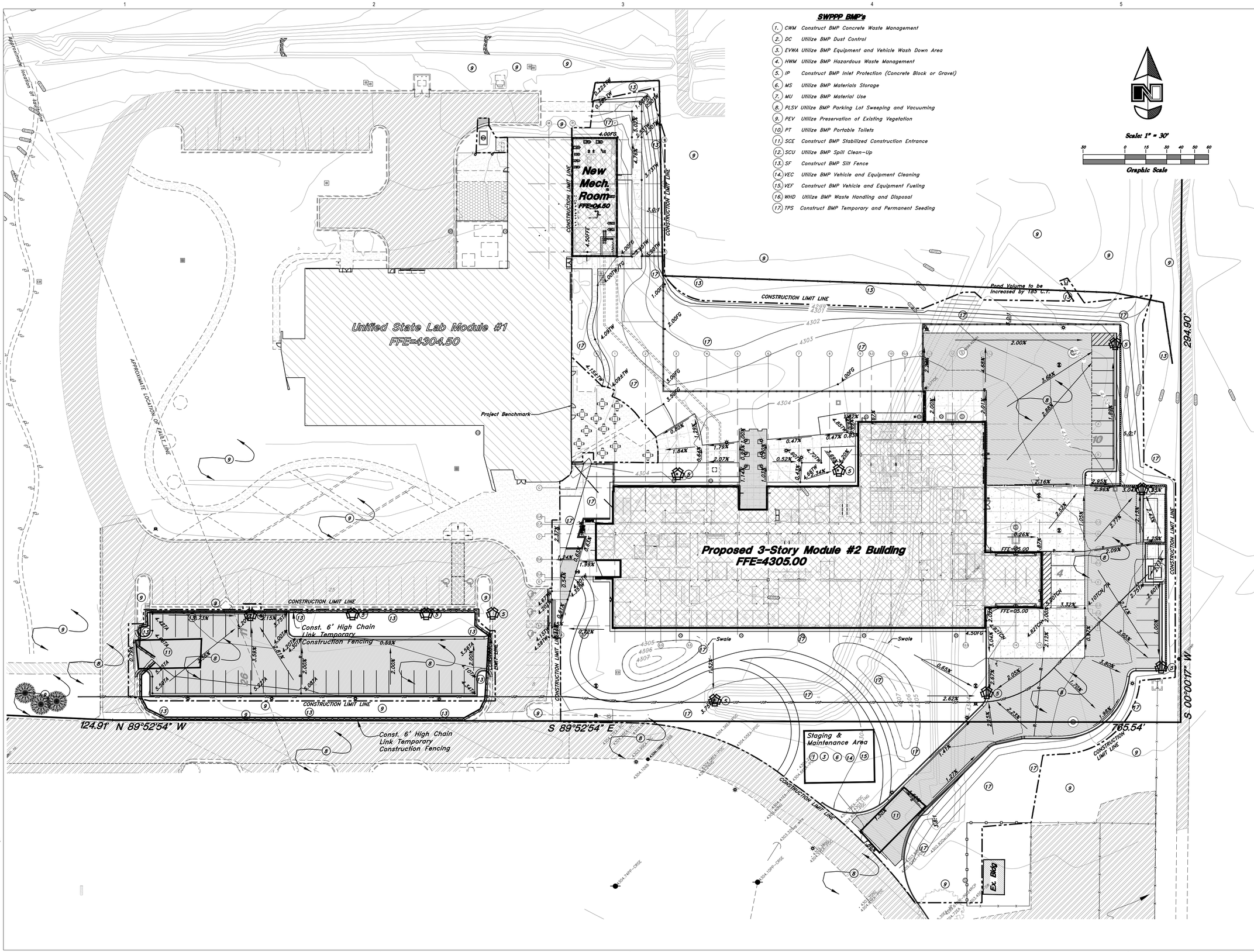

CRSA
649 E. South Temple
Salt Lake City, UT 84102
801.355.5915

MWL
11798 N. Lakeridge Pkwy.
Ashland, VA 23005
804-228-7473

State of Utah
Department of Administrative Services
Division of Facilities Construction & Management
4110 State Office Building
Salt Lake City, Utah 84114
Phone: (801) 538 - 3018
Fax: (801) 538 - 3267

DIVISION OF FACILITIES CONSTRUCTION AND MANAGEMENT
REVIEWED FOR CODE COMPLIANCE
SIGNATURE: Ernie Gallo
DATE: 08-05-2014

PROFESSIONAL ENGINEER
774290
ALBERT COURY MORRIS
4-21-14
STATE OF UTAH

ARCHITECT-ENGINEER STAMP

Unified State Laboratory Module 2

4451 South 2700 West, Taylorsville, UT 84118

DFCM #:	13020300
Project #:	B13-024
DATE:	ISSUE TYPE:
April 21, 2014	BID SET
CHECKED BY	C. MORRIS
DRAWN BY	R. CHILD

STORM WATER POLLUTION PREVENTION PLAN

C500

VOLUME 1

C:\Users\fernando\Documents_A_13024_Modl1_2013_fernando.rvt
1/31/2014 10:48:31 AM

W:\13N904 Unified State Labs Module #2\dwg\13N904-S4.dwg, 4/18/2014 2:40:34 PM, RebeccaC, 1:1

GENERAL STRUCTURAL NOTES

GENERAL

1. The structural notes are intended to complement the project specifications. Specific notes and details in the drawings shall govern over the structural notes and typical details.
2. Typical details and sections shall apply where specific details are not shown.
3. The contractor shall verify all site conditions and dimensions. If actual conditions differ from those shown in the contract drawings, the contractor shall immediately notify the architect/engineer before proceeding with the fabrication or construction of any affected elements.
4. Drawings shall not be scaled for the purpose of preparing shop drawings or for construction. Where dimensions on the design drawings are not provided or inferred, the contractor may scale drawings only to estimate member lengths for the purpose of bidding.
5. Changes to these contract drawings may be made only by an authorized representative of Dunn Associates, Inc. Dunn Associates, Inc. shall not be held responsible or liable for any claims arising directly or indirectly from changes made without written authorization by an authorized representative of Dunn Associates, Inc.
6. Omissions or conflicts between the contract drawings and/or specifications shall be brought to the attention of the architect/engineer before proceeding with any work involved. In case of conflict, follow the most stringent requirement as directed by the architect/engineer at no additional cost to the owner.
7. The contractor shall submit a written request to the architect/engineer before proceeding with any changes, substitutions, or modifications. Any work done by the contractor before receiving written approval will be at the contractor's risk.
8. The contractor shall coordinate with all trades any items that are to be integrated into the structural system such as openings, penetrations, mechanical and electrical equipment, etc. Sizes and locations of mechanical and other equipment that differs from those shown on the contract drawings shall be reported to the architect/engineer. Contractor shall take measures as required to insure that construction loads shall not exceed design loads for the structure.
9. The contractor shall be responsible for means, methods, techniques, sequences, and procedures in order to comply with the contract drawings and specifications. The contractor shall provide adequate shoring and bracing as required for the chosen method of erection. Shoring and bracing shall remain in place until final connections for the permanent members are completed. The building shall not be considered stable until all connections are completed. Walls shall not be considered self-supporting and shall be braced until the floor/roof system is completed.
10. Site observations by a field representative of Dunn Associates, Inc. shall not be construed as approval of construction, the procedures, nor special inspection.
11. Detailing and shop drawing production for structural elements will require information (including dimensions) contained in the architectural, structural and/or other consultants' drawings. The structural drawings shall be used in conjunction with the architectural and other consultant's drawings. See the Architectural Drawings for dimensions, doors, windows, non-bearing interior and exterior walls, elevations, slopes, stairs, curbs, drains, recesses, depressions, railings, waterproofing, finishes, chamfers, kerfs, etc.
12. The Contractor may choose to submit shop drawings and submittals for review electronically. The Contractor may do this provided a minimum of one hard copy set is submitted for review. The submittal will be stamped as received by Dunn Associates, Inc. when the hard copy is received by our office. Hard copies of small submittals need not be submitted if the Contractor receives the approval for this exception by the Engineer of Record.
13. Review of shop drawing submittals by Dunn Associates, Inc. is for general compliance only and is not intended for approval. The shop drawing review shall not relieve the contractor from the responsibility of completing the project according to the contract documents.
14. Shop drawings made from reproductions of the structural drawings will be rejected unless the contractor signs a release agreement prior to the shop drawings being reviewed. The contractor may also obtain electronic files of the plan sheets after signing a release agreement. Electronic files of the detail sheets and schedule sheets will not be made available.
15. All work shall be done in accordance with OSHA requirements. Potential conflicts between these documents and OSHA requirements shall be brought to the attention of the structural engineer before proceeding with the work.

BASIS OF DESIGN

1. Governing Building Code — International Building Code 2012
2. Seismic Risk Category — II
3. Floor Live Loads
   - 3.1. Uniformly Distributed Loads
     - 3.1.1. Offices + Partitions — 80 psf + 20 psf
     - 3.1.2. Laboratories — 125 psf
     - 3.1.3. Corridors Above Main Floor — 80 psf
     - 3.1.4. Mechanical Rooms — 150 psf
     - 3.1.5. Light Storage — 125 psf
     - 3.1.6. High Density Storage — 250 psf
   - 3.2. Concentrated Loads, all areas — 2000 lbs
4. Roof Snow Load
   - 4.1. Ground Snow Load — Pg = 43 psf
   - 4.2. Flat Roof Snow Load — Pf = 30 psf
   - 4.3. Snow Exposure Factor — Ce = 1.0
   - 4.4. Thermal Factor — Ct = 1.0
   - 4.5. Snow Load Importance Factor — Is = 1.0
5. Wind Load
   - 5.1. Basic Wind Speed (3 Second Gust) — 115 mph
   - 5.2. Wind Directionality Factor — Kd = 0.85
   - 5.3. Wind Exposure Category — C
   - 5.4. Wind Topographic Factor — Kzt = 1.0
   - 5.5. Internal Pressure Coefficient — ± 0.18
6. Seismic Design Criteria
   - 6.1. Mapped Spectral Response Accelerations
     - 6.1.1. Short Period Acceleration — SS = 1.476
     - 6.1.2. 1-Second Acceleration — S1 = 0.490
   - 6.2. Spectral Response Coefficients
     - 6.2.1. Short Period Acceleration — SDS = 0.984
     - 6.2.2. 1-Second Acceleration — SD1 = 0.493
   - 6.2. Site Class (Soil Profile) — D
   - 6.3. Seismic Importance Factor — 1.0
   - 6.4. Seismic Design Category — D
   - 6.5. Effective Structural Seismic Weight — W
   - 6.6. Basic Seismic Force Resisting System — Steel Buckling - Restrained Brace Frames / Steel Special Moment Frames
     - 6.6.1. Response Modification Coefficient — R = 8 / 8
     - 6.6.2. System Overstrength Factor — Ωo = 2.5 / 3
     - 6.6.3. Deflection Amplification Factor — CD = 5 / 5.5
     - 6.6.4. Design Base Shear — V = Cs*W = 0.04W
   - 6.7. Analysis Procedure — Modal Response Spectrum
7. Serviceability Criteria
   - 7.1. Interstory Seismic/Wind Drift — See Drift Tables on S002
   - 7.2. Deflection Limits

	Total	Live/Snow
Floor	L/360	L/480
Roof	L/240	L/360
Perimeter	----	L/600(3/8" max)

EXTERIOR FACADE FRAMING AND CLADDING

1. All systems (including façade, cladding, components, elements and/or their attachments to the structure) intended for use to enclose the building shall comply with the following criteria for interstory drift as required by ASCE 7 as interpreted or defined herein and as modified or supplemented herein. See Basis of Design section of the General Structural notes for vertical and horizontal (story) drift limits.
   - 1.1. Systems shall be detailed to accommodate vertical building movement (live load deflection) in conjunction with interstory drift. Interstory drifts should be considered equal in both orthogonal building directions unless noted otherwise.
   - 1.2. Systems shall be designed and detailed for elastic (probable) interstory drift such that all systems shall remain intact, undamaged and all sealant joints integral to or placed between systems shall remain intact, uncompromised, without failures or breaches. Joints, jointing and/or jointery shall be designed such that sealant materials flex, compress and/or shear within limits recommended by the sealant manufacturers so as to remain an effective barrier for water and air infiltration.
   - 1.3. Systems shall be designed and detailed for inelastic (credible) interstory drift such that no failure or distress occurs to systems except joint sealant is allowed to fail. Under no circumstances shall elements and/or components come in contract with adjacent systems, elements and/or components.
   - 1.4. Systems with glazing are intended to keep all members and glazing intact and connected to the building. Glazing shall not break or become dislodged from its restraints. Gaskets may fail and may dislodge but shall not let glass escape its restraint.
   - 1.5. Systems shall not apply moments to the slab edges and shall not induce lateral loads into beams unless kicker bracing is supplied. Attachments shall not induce torsional loads into beams and columns, nor loads into braces that are part of the Main Seismic Force Resisting System.
   - 1.6. Allowance shall be made for sealant to occupy some finite space when compressed beyond its working limit (suggest ±15% of its static joint width).
2. All system connections shall comply with requirements of ASCE 7 , Chapter 13.
3. All systems shall be coordinated to interface with all adjoining systems such that consistency is maintained throughout the exterior closure regarding the mode (sliding or racking) in which the system performs to meet interstory drift and other design criteria.
4. Systems and details shall be consistent with the architectural intent for joint sizes and system details to the largest extent possible, or where required, modified only after prior approval.

FOUNDATION

1. Soils Report by: GSH Job No # 0128-096-13 dated January 17, 2014.
2. Soil Bearing Pressure: 2,500 psf, on 24" to 60" of compacted structural fill extending to suitable natural soils. See footing schedule for required structural fill thickness.
3. Frost Protection: — 30 inches minimum
4. Lateral Soil Pressure Fluid Equivalent Density:
   - 4.1. Active — 35 pcf (retaining walls)
   - 4.2. At Rest — 60 pcf (rigid foundation walls)
   - 4.3. Passive — 300 pcf
   - 4.4. Dynamic (seismic) Soil Pressure: — 125 psf
5. Coefficient of Friction — 0.45
6. The soils engineer shall review all excavations and fill placement prior to placing concrete.

EARTHWORK

1. Clearing: The entire building area shall be cleared of vegetation, topsoil, construction debris, disturbed soil, undocumented fill and other unsuitable materials. Unsuitable materials, such as the existing underground utilities, should also be removed from beneath the proposed construction. In addition, collapsible soils and non-engineered fills shall be removed from beneath the building footprint.
2. Contractor is to provide temporary shoring for excavations as required.
3. Contractor is to provide measures necessary to prevent damage to or settlement of new or existing construction and utilities on or adjacent to project site.
4. Contractor is to provide dewatering as required to protect the site from flooding.
5. Proof rolling: The natural undisturbed soil below all footings shall be proof rolled prior to placing concrete. Remove all soft spots and replace with compacted structural fill.
6. Compacted structural fill: All fill material shall be a well-graded granular material with a maximum size less than 3" and with not more than 15% passing a #200 sieve. It shall be compacted to 95% of the maximum laboratory density as determined by ASTM D 1557. All fill shall be tested. Compacted structural fill shall be placed in lifts not exceeding 6" in uncompacted thickness. The on-site silt is not suitable for use as fill in building areas but may be used in pavement, flatwork and landscape areas.
7. Consult the project specifications and soils report for further earthwork requirements. The soils engineer shall review all excavations and fill placement prior to placing concrete.

CONCRETE

1. Concrete shall be supplied in accordance with ACI 318 and the following requirements:

Concrete Use	Comp. Strength f'c (psi)	Exposure Classes	Cement Type [a]	Max. W/CM Ratio	Max. Flyash	Air Content[b]	Aggregate Size, Max.	Slump Limit[c]
Footings [d]	4500	F1, S0, P0, C0	I, II	0.45	50%	5%	1 1/2"	4"
Mat Footings [d]	4500	F1, S0, P0, C0	I, II	0.45	50%	5%	1 1/2"	4"
Foundation Walls	4500	F1, S0, P0, C1	I, II	0.45	25%	5%	3/4"	4"
Interior Slabs on Grade	3000	F0, S0, P0, C0	I, II	0.50	25%	1.5%	1"	4"
Normal Wt. Concrete on Steel Deck	3500	F0, S0, P0, C0	I, II	0.50	25%	1.5%	3/4"	4"
Site Concrete [e] (reinforced)	5000	F2, S0, P0, C2	I, II	0.40	25%	6%	3/4"	4"
Site Concrete [e] (unreinforced)	4500	F2, S0, P0, C0	I, II	0.45	25%	6%	3/4"	4"

Table Footnotes:

a. Cement to comply with ASTM C150. Use Type V cement where required by soils report.
b. Air content ± 1.5%, measured at point of final placement. Air-entraining admixtures shall comply with ASTM C260 (when used). Calcium chloride shall not be added to the concrete mix. Unreinforced concrete slabs on grade may have calcium chloride not exceeding one percent. Air entrainment shall be adjusted for the use of admixtures and fly ash.
c. Slump limit ± 1" applies to non-plasticized concrete. Test shall be conducted prior to adding plasticizer if used.
d. The required compressive strength specified is permitted to be evaluated at 56 days instead of the standard 28 days for footing concrete with fly ash content exceeding 25%.
e. See civil drawings for site concrete requirements. In the absence of information, use values listed.

2. Materials unless noted otherwise:
   - 2.1. Normal Weight aggregates ---------- ASTM C33
   - 2.3. Fly Ash, Class F Pozzolan ---------- ASTM C618
   - 2.4. Reinforcing Steel
     - 2.4.1. General ---------- ASTM 615 Grade 60
     - 2.4.2. Columns, Beams, Shearwalls ---------- ASTM A706-60ksi
       ASTM A615 is permitted if mill certifications are submitted showing that actual yield strength does not exceed the specified strength by more than 18000 psi and the ratio of tensile to yield strength is greater than 1.25.
   - 2.5. Deformed Bar Anchors (DBA) ---------- ASTM A496
   - 2.6. Headed Stud Anchors (HSA) ---------- ASTM A108
   - 2.7. Anchor Bolts: See steel section of general notes.
   - 2.8. No aluminum conduit or product containing aluminum or any other material injurious to concrete shall be embedded in concrete.
3. Reinforce slab on grade as follows:
   - 3.1. Macro synthetic fibers "coarse fibers" (per ASTM Subcommittee C09.42), made from virgin polyolefin, with equivalent diameter between 0.016" and 0.05", having minimum aspect ratio (length/equivalent diameter) of 50, at a minimum rate of 4 lb / cubic yard. Fibers above finished slab shall not be burned off.
4. Reinforce composite slabs over metal deck with the following welded wire reinforcement (minimum). Welded wire reinforcement shall be placed 1" to 1 1/2" below the top of the slab:
   - 4.1. Slab (above upper deck flute) 3 1/4" or thinner — 6" x 6" - W1.4/W1.4
   - 4.2. Slab (above upper deck flute) 4" or thinner, but thicker than 3 1/4" — 6" x 6" - W2.1/W2.1
   - 4.3. Slab (above upper deck flute) thicker than 4" — 6" x 6" - W2.9/W2.9
5. In composite slabs, welded wire reinforcement may be substituted with macro synthetic fibers "coarse fibers" (per ASTM Subcommittee C09.42), made from virgin polyolefin, with equivalent diameter between 0.016" and 0.05", having minimum aspect ratio (length/equivalent diameter) of 50, at a minimum rate of 4 lb / cubic yard. Fibers above finished slab shall not be burned off.
6. The contractor shall be responsible for the design, detailing, care, placement and removal of all formwork and shores.
   - 6.1. Supporting forms and shoring shall not be removed until structural members have acquired sufficient strength to safely support their own weight and any construction load to which they may be subjected. In no case, however, shall forms and shoring be removed in less than 24 hours after concrete placement.
   - 6.2. Suspended slabs shall be re-supported after form removal until concrete reaches its 28-day specified compressive strength.
7. Reinforcement shall have the following concrete cover: ---------- Clear Cover
   - 7.1. Cast-in-place Concrete
     - 7.1.1. Cast against and permanently exposed to earth ---------- 3"
     - 7.1.2. Formed concrete exposed to earth or weather:
       - #6 thru #18 bars ---------- 2"
       - #5 and smaller bars ---------- 1 1/2"
     - 7.1.3. Concrete not exposed to weather or in contact with ground:
       - Slabs, Walls, Joists; #11 bars and smaller ---------- 3/4"
       - Beams, Columns: Primary Reinforcement, Ties, ---------- 1 1/2"
       - Stirrups, Spirals
   - 7.2. Reservoir Concrete
     - 7.2.1. All bars ---------- 2"
8. Construction Joints and Control Joints:
   - 8.1. Provide a beveled 2" x 4" x continuous keyway in all horizontal and vertical construction joints including between top of footing and foundation walls. In addition, all joints shall be intentionally roughened to a full amplitude of approximately 1/4".
   - 8.2. Control joints shall be installed in slabs on grade so the length to width ratio of the slab is no more than 1.25:1. Control joints shall be completed within 12 hours of concrete placement. Control joints may be installed by either:
     - 8.2.1. Saw cut with depth of 1/4 the thickness of the slab
     - 8.2.2. Tooled joints with depth of 1/4 the thickness of the slab
   - 8.3. Install construction or control joints in slabs on grade at a spacing not to exceed 30 times the slab thickness in any direction, unless noted otherwise. Construction joints shall not exceed a distance of 125'-0" on center in any direction.
9. Construction
   - 9.1. Use chairs or other support devices recommended by the CRSI to support bar and tie reinforcement bars and WWF prior to placing concrete. WWF shall be continuously supported at 36" on center maximum. Reinforcing steel for slabs on grade shall be adequately supported on precast concrete units. Lifting the reinforcing off the grade during placement of concrete is not permitted.
   - 9.2. Contractor shall coordinate placement of all openings, curbs, dowels, sleeves, conduits, bolts, inserts and other embedded items prior to concrete placement.
   - 9.3. All embeds and dowels shall be securely tied to formwork or to adjacent reinforcing prior to the placement of concrete.
   - 9.4. No pipes, ducts, sleeves, etc. shall be placed in structural concrete unless specifically detailed or approved by the structural engineer. Penetrations through walls when approved shall be built into the wall prior to concrete placement. Penetrations will not be allowed in footings or grade beams unless detailed. Piping shall be routed around these elements and footings stepped to avoid piping.
   - 9.5. Reinforcing bars shall not be welded unless specifically shown on drawings. In such cases, use only AWS standards. Do not substitute reinforcing bars for DBAs or HSAs.
   - 9.6. Top of concrete columns shall be flush (±1/4") with bottom of supported cast-in-place members.
10. Detailing:
    - 10.1. Lap splice lengths shall be detailed to comply with the "Reinforcing Bar Lap Splice Schedule" contained within the contract drawings.
      - 10.1.1. Do not splice stirrups and ties. Do not splice vertical bars in retaining walls unless specifically shown.
      - 10.1.2. At shearwall boundary elements and at moment frame beams to columns, lap lengths shall be increased by 25%.
      - 10.1.3. Splices may be made with mechanical splices capable of 125% tension capacity of the bar being spliced. Mechanical splices shall be the positive connecting type coupler and shall meet all ACI requirements. Use "Cadweld", "Lenton" Standard Couplers, "Bar-Lock" or equal with internal protector. If mechanical splices are used, splices or couplers on adjacent bars shall be staggered a minimum of 24" apart along the longitudinal axis of the reinforcing bars.
    - 10.2. At joints provide reinforcing dowels to match the member reinforcing, unless noted otherwise.
    - 10.3. At all discontinuous control or construction slab on grade joints, provide (2) #4 x 48".
    - 10.4. Provide corner bars at intersecting wall corners using the same bar size and spacing as the horizontal wall reinforcing.
    - 10.5. All vertical reinforcing shall be doweled to footings, or to the structure below with the same size and spacing as the vertical reinforcing for the element above. Dowels extending into footings shall terminate with a 90° standard hook and shall extend to within 4" of the bottom of the footing. Footing dowels (#8 bars and smaller) with hooks need not extend more than 20" into footings.
    - 10.6. In concrete shearwalls, the horizontal wall reinforcing shall terminate at ends of walls and openings into the far end of the jamb column with a 90° standard hook plus a 6 bar diameter extension. Horizontal wall reinforcing shall be continuous through construction and control joints.
    - 10.7. See details for reinforcing around miscellaneous openings. All recesses that interrupt reinforcing shall be reinforced the same as an opening.
    - 10.8. Reference ACI 315 for additional detailing requirements.
11. Contractor required to submit concrete mix design for review by the engineer prior to any placement of concrete.
12. Contractor shall refer to and follow the recommendations in ACI 305R for hot weather concreting and ACI 306R for cold weather concreting.
13. Contractor is not to backfill against retaining walls unless walls have achieved design strength or have been shored. Contractor is not to backfill against basement walls without placement of the main floor diaphragm unless the walls have been shored or approval of the EOR has been granted, or it has been noted otherwise on the design drawings.
14. Construction activity or storage of materials shall not take place on newly placed concrete for a minimum of 7 days after concrete placement.

POST-INSTALLED ANCHORS

1. Post-installed anchors shall only be used where specifically detailed or called for on the design drawings. If circumstances arise during construction where the Contractor desires to substitute a post-installed anchor in place of a cast-in-place anchor, the Contractor shall submit a formal written request for each circumstance to the Architect and Engineer for review.
2. Follow all ICC Evaluation Report and manufacturers' requirements and recommendations for post-installed anchor installation. Where conflicts may exist, the most stringent requirement applies.
3. Follow manufacturer and ICC evaluation report requirements for installation temperature of adhesive anchors. Adhesive anchors shall not be installed or cured outside of approved temperature ranges.
   - 3.1. Adhesive anchors in concrete (normal weight only) shall be
     - 4.1.1. HIT RE-500 SD by Hilti (ESR-2322)
     - 4.1.2. HIT HY-200 by Hilti (ESR-1987)
     - 4.1.3. SET-XP by Simpson (ESR-2508)
     - 4.1.4. AT-XP by Simpson (IAPMO ES ER-0263)
     - 4.1.5. PE1000+ by Powers Fasteners (ESR-2583) - 3/8" to 1 1/4" diameter only
4. Mechanical (Expansion) anchors
   - 5.1. Mechanical anchors in concrete shall be
     - 5.1.1. Kwik Bolt TZ by Hilti (ESR-1917)
     - 5.1.2. Kwik HUS-EZ by Hilti (ESR-3027)
     - 5.1.3. Strong-Bolt by Simpson (ESR-1771)
     - 5.1.4. Strong-Bolt 2 by Simpson (ESR-3037)
     - 5.1.5. Titen HD by Simpson (ESR-2713)
     - 5.1.6. Torq-cut by Simpson (ESR-2705)
     - 5.1.7. Trubolt+ by ITW Redhead (ESR-2427)
     - 5.1.8. Powers Wedge-Bolt+ by Powers (ESR-2526)
     - 5.1.9. Power-Stud+ SD1 by Powers (ESR-2818)
     - 5.1.10. Power-Stud+ SD2 by Powers (ESR-2502)
     - 5.1.11. Atomic+ Undercut by Powers (ESR-3067)
6. The Contractor may submit, for review and approval, the manufacturer's ICC evaluation report of alternate anchor systems. The alternate method shall provide minimum capacities equal to or greater than those in the above noted anchors. The alternate method shall be approved by the engineer of record prior to the substitution.
7. Special Inspection and Testing
   - 7.1. Special inspection shall be performed according to the requirements of the ICC evaluation report, per section 1705.3 of the IBC. Periodic inspection is allowed for mechanical anchors per section 6.6 of ICC-ES AC193.
   - 7.2. Testing shall be done according to the more stringent requirements of the ICC evaluation report and the values listed below.
     - 7.2.1. Adhesive Anchors in Concrete or Solid Grouted Masonry: 50% of anchors in non-redundant elements (e.g. column, brace connections, boundary steel, hold-downs) and 10% of anchors in redundant elements shall be tension tested at the following loads in kips:

Bar Size	Concrete
#3	5.3
#4	9.6
#5	14.9
#6	21.1
#7	28.8
#8	37.9
#9	48.0
#10	61.0
#11	74.9

     - 7.2.2. Mechanical anchors shall be tension tested to twice the allowable tension load listed in the ICC evaluation report.

MASONRY

1. Materials, unless noted otherwise:
   - 1.1. Concrete Masonry Units (CMU): Medium weight (115pcf) (minimum unit strength of 1900 psi) f'm = 1500 psi
   - 1.2. Mortar: Type "S" (1800 psi minimum compressive strength)
   - 1.3. Grout shall attain a minimum compressive strength of 2000 psi at 28 days.
   - 1.4. Reinforcing Steel ---------- ASTM 615 Grade 60 (Fy = 60 ksi)
   - 1.5. Deformed Bar Anchors (DBA) ---------- ASTM A496
   - 1.6. Headed Stud Anchors (HSA) ---------- ASTM A108
   - 1.7. Anchor Bolts ---------- ASTM A307
   - 1.8. Heavy hex nuts and hardened washers ---------- ASTM A563
2. Reinforcement shall have the following cover:
   - 2.1. Joint reinforcement shall have not less than 5/8" mortar coverage from the exposed face.
   - 2.2. Other reinforcement shall have a minimum coverage of one bar diameter over all the bars, but not less than 3/4". When masonry is exposed to soil, minimum coverage shall be 1 1/2".
3. Construction Requirements
   - 3.1. All units shall be laid with full mortar beds on the face shells. All head joints shall be filled solidly with mortar for a distance in from the face of the units not less than the thickness of the longitudinal face shells. Cells which are to be grouted shall have full head joints.
   - 3.2. Masonry walls, beams and columns shall be constructed with running bond unless noted otherwise.
   - 3.3. Solid grouting of walls is unacceptable except where specifically noted.
   - 3.4. All cells containing reinforcement, embeds, anchor bolts, etc. shall be filled solid with grout. Grout shall be placed by mechanical vibration during placing and revibrated after excess moisture has been absorbed but before workability is lost. Puddling or rodding of grout is not allowed.
   - 3.5. Where walls are not grouted solid, each grout pour shall terminate flush with the top of the uppermost unit except at cells with vertical reinforcing where the grout shall be 1 1/2" below top of unit to provide construction key.
   - 3.6. Grout pours shall be limited to 5'-0" unless high lift grouting procedures are followed.
   - 3.7. All masonry below grade shall be solid grouted.
   - 3.8. Vertical cells to be filled with grout shall have vertical alignment sufficient to maintain a clear, unobstructed, vertical cell measuring not less than 2" by 3". All steel reinforcement shall be secured against displacement prior to grouting by wire positioners or other suitable devices at intervals not exceeding 200 bar diameters or 10'-0" maximum, or at bar splice locations. Vertical reinforcing shall be located at the center of the wall unless noted otherwise.
   - 3.9. Reinforcing bars shall not be welded unless specifically shown on drawings. In such cases, use only AWS standards. Do not substitute reinforcing bars for DBAs or HSAs.
   - 3.10. Control Joints: Spacing shall not exceed 26'-0". See architectural drawings for locations.
   - 3.11. Grout all beam and joist pockets solid after installation of beams and joists.
   - 3.12. Embed channels and plates shall be placed so as to create a flush surface with the face of the wall.
   - 3.13. Anchor bolts and headed stud anchors shall be set in a grouted cell. Anchor bolts and headed stud anchors shall have 1/2" grout surrounding the shank at its penetration. Grout shall be flush with the face or top of the masonry.
4. Detailing Requirements
   - 4.1. Lap all masonry reinforcing per bar size as follows:
     Required lap lengths for single bars centered in each cell:
     #3 = 16" #6 = 43" #9 = 82"
     #4 = 22" #7 = 60"
     #5 = 26" #8 = 72"

     Required lap lengths for flush wall pilaster/column, 2 bars per cell with 2.5" cover:
     #3 = 16" #6 = 54" #9 = 82"
     #4 = 22" #7 = 63"
     #5 = 32" #8 = 72"
   - 4.2. All vertical reinforcing shall be doweled to the foundation wall, footing (structure below) and to the structure below with the same size dowel, spacing (and in the same core) as the vertical wall reinforcing above.
   - 4.3. Corner Bars: Horizontal reinforcement shall be continuous at all corners and at intersecting walls. Provide corner bars with the required lap splice length.
   - 4.4. See details for reinforcing around miscellaneous openings.
   - 4.5. Horizontal wall reinforcing shall be continuous through joining concrete walls, masonry walls, columns, and pilasters. Provide a key between the wall and the column or pilaster. Horizontal wall reinforcing shall be placed inside the column vertical reinforcing.
   - 4.6. Horizontal reinforcing shall terminate with a standard hook at edge of openings and ends of walls without corner bars as shown in details.
   - 4.7. Horizontal wall reinforcing shall terminate with a standard 180° hook at each side of control joints except at floor and roof levels, lintels, beams and at top of parapets as shown in details.
   - 4.8. All masonry column ties shall terminate with 135° hooks plus a 6 bar diameter extension (4" minimum).

APRIL 21, 2014
BID SET

NOTE:
THESE STRUCTURAL DRAWINGS ARE BASED ON ARCHITECTURAL DRAWINGS DATED APRIL 10, 2014

DIMENSIONS AND ELEVATIONS, AS THEY RELATE TO THE BUILDING IN GENERAL, i.e. GRID TO GRID DIMENSIONS OR DECK BEARING ELEVATIONS, ARE SUPPLIED BY THE ARCHITECT. THEY ARE PROVIDED ON THE STRUCTURAL PLANS AND DETAILS FOR THE CONVENIENCE OF THE CONTRACTOR. VERIFY DIMENSIONS AND ELEVATIONS WITH ARCHITECTURAL DRAWINGS.

DUNN ASSOCIATES, INC
Consulting Structural Engineers
WWW.DUNN-SE.COM
PH: 801-575-8877 FAX: 801-575-8875

CRSA
649 E. South Temple
Salt Lake City, UT 84102
801.355.5915

MWL
11798 N. Lakeridge Pkwy.
Ashland, VA 23005
804-228-7473

State of Utah
Department of Administrative Services
Division of Facilities Construction & Management
4110 State Office Building
Salt Lake City, Utah 84114
Phone: (801) 538 - 3018
Fax: (801) 538 - 3267

DIVISION OF FACILITIES CONSTRUCTION AND MANAGEMENT
REVIEWED FOR CODE COMPLIANCE
SIGNATURE: Eric Cafe
DATE: 08-05-2014

PROFESSIONAL STRUCTURAL ENGINEER
No. 295747
TAIT A. KETCHAM
04/21/2014
STATE OF UTAH

ARCHITECT-ENGINEER STAMP

Unified State Laboratory Module 2
4451 South 2700 West,
Taylorsville, UT 84118

DFCM #: 13020300
Project #: 13062

DATE:	ISSUE TYPE:
APRIL 21, 2014	BID SET
CHECKED BY	TAK
DRAWN BY	SJS

GENERAL STRUCTURAL NOTES

S001
VOLUME 1

GENERAL STRUCTURAL NOTES

MASONRY VENEER

1. The following shall only be used where the distance between the inside face of the veneer and the outside face of the stud framing or support wall system does not exceed 4 1/2". Where the distance exceeds 4 1/2" the subcontractor shall engage a licensed engineer to design the masonry veneer anchor spacing as a deferred submittal. See Deferred Submittal Notes for additional information.
2. Masonry veneer shall be attached to steel stud and wood stud walls with "Dur-O-Wal DA 213S seismic veneer anchors" by Dur-O-Wal or Hohmann & Barnard "DW-10" or "DW-10HS seismic veneer anchors" (or equal) spaced at 16" on center. Veneer anchors shall be attached to studs with (2) #10 corrosion resistant self-drilling screws and neoprene washers. Attach the veneer to the anchors with "Dur-O-Wal 213S Seismic Steel Pintles" or Hohmann & Barnard 3/16" diameter "Byna-Tie with Seismiclips" (or equal) spaced at a maximum of 16" on center in both directions. Anchor ties shall engage to a galvanized #9 gauge horizontal joint reinforcement wire in the veneer, which shall be continuous and shall be placed at 16" on center maximum at the center of the veneer.
3. Masonry Veneer shall be attached to concrete walls with 22 gauge "Dur-O-Wal DA100" galvanized dovetail slots installed vertically in concrete at 16" on center. Attach the veneer to dovetail slots with 16 gauge "Dur-O-Wal DA 131 seismic dovetail anchor ties" or Hohmann & Barnard 3/16" diameter "Byna-Tie with Seismiclips" (or equal) spaced at a maximum of 16" on center in both vertical and horizontal directions. Anchor ties shall engage to a galvanized #9 gauge horizontal joint reinforcement wire in the veneer, which shall be continuous and shall be placed at 16" on center maximum at the center of the veneer. Dovetail slots and anchor ties shall be galvanized.
4. Masonry veneer shall be attached to reinforced masonry walls with "tri-rod ladur type reinforcement" spaced at a maximum of 16" on center vertically consisting of (3) #9 gauge, galvanized, corrugated, wires. Veneer may also be attached with "Dur-O-Wal DA 3600S Heavy Duty Seismic Ladur-Eye" with DA 213S seismic steel pintles spaced at 16" on center maximum in both vertical and horizontal directions. Anchor ties shall engage to a galvanized #9 gauge horizontal joint reinforcement wire in the veneer, which shall be continuous and shall be placed at 16" on center maximum at the center of the veneer. Anchors shall extend to the galvanized "ladur type" ((2) #9 wires) joint reinforcing in the masonry wall spaced at 16" on center maximum.
5. Other methods of attachment may be used after written acceptance by the architect and structural engineer.
6. Steel Lintels: Provide steel angle lintels at all openings through the masonry veneer. Provide 1" of bearing for each foot of width of opening, with a minimum bearing of 6". See the Steel Angle Lintel Schedule for size.

STRUCTURAL STEEL

1. Codes and Standards: Fabrication and installation shall comply with the latest edition of the following:
   - 1.1. American Institute of Steel Construction (AISC), "Specification for the Design, Fabrication and Erection of Structural Steel for Buildings," with "Commentary".
   - 1.2. AISC "Code of Standard Practice" excluding sections 3.4, 4.4 and 4.4.1.
   - 1.3. AISC "Specification for Structural Joints Using ASTM A325 or A490 Bolts"
   - 1.4. AISC "Seismic Provisions for Structural Steel Buildings."
   - 1.5. American Welding Society (AWS), Structural Welding Codes D1.1, D1.3, D1.4, and D1.8, except as modified by the "Steel Construction Manual".
2. Material:
   - 2.1. Wide Flange Sections----------ASTM A992 (50 ksi)
   - 2.2. Plate
     - 2.2.1. Typical----------ASTM A36
     - 2.2.2. Braced/Moment Frames----------ASTM A572 Grade 50
   - 2.3. Notch-toughness requirements apply for Group 3, 4, and 5 shapes with flange thickness greater than 1 1/2" and plate 2" and thicker which are a part of the Seismic Load Resisting System (SLRS). Minimum Charpy V-Notch requirements are 20 ft-lbs at 70°F.
   - 2.4. Notch-toughness requirements apply for demand critical welds. Minimum Charpy V-Notch requirements are 20 ft-lbs at 0°F and 40 ft-lbs at 70°F
   - 2.5. Pipe----------ASTM A53 Grade B Type E/S
   - 2.6. Hollow Structural Shapes
     - 2.6.1. Rectangular----------ASTM A500 Grade B (46 ksi)
     - 2.6.2. Round----------ASTM A500 Grade B (42 ksi)
   - 2.7. Other Structural Shapes (M, C, etc)----------ASTM A36
   - 2.8. Bolted Connections ----------ASTM A325
   - 2.9. Anchor Bolts
     - 2.9.1. All Columns unless noted otherwise: ASTM F1554 Grade 105 (equiv to A193 Grade B7) with ASTM A563 heavy hex nuts with ASTM F436 minimum 5/16" thick washers.
   - 2.10. Weld Filler Metal
     - 2.10.1. Shielded Metal Arc Welding----------AWS A5.1, low-hydrogen only
       Low-hydrogen restrictions do not apply when welding sheet steels in accordance with AWS D1.3, including attaching these steels to structural members.
     - 2.10.2. Gas-Metal & Metal-Cored Arc Welding------AWS A5.18
     - 2.10.3. Flux-Cored Arc Welding----------AWS A5.20
       E7XT-4 or E7XT-11 electrodes are not permitted.
     - 2.10.4. Intermixing of welds made from self-shielded welding electrodes with gas-shielded electrodes is not allowed in demand critical welds, unless tested in accordance with AWS D1.8, annex B. The Field Erection Contractor is responsible for verifying intermixing of self-shielded and gas-shielded welding will not occur, or alternatively, the welding procedure is qualified by testing.
   - 2.11. Deformed Bar Anchors (DBA)----------ASTM A496
   - 2.12. Headed Stud Anchors (HSA)----------ASTM A108
   - 2.13. Non-Shrink Grout----------ASTM C1107 Grade B
     Non-shrink grout shall be prepackaged, non-metallic and non-gaseous.
     Furnish certified independent test data to Structural Engineer.
     Fluid Consistency (flow cone) = 20 to 30 seconds
     Compressive Strength in 28 days = 7,500 psi
3. Structural Detailing
   - 3.1. Provide full depth web stiffener plates at each side of all beams at all bearing points. Stiffener plates shall be the thickness called out below unless noted otherwise. Stiffeners shall be welded on both sides of the plate-to-flange and plate-to-web interfaces. Do not weld into the web-to-flange fillet region of the member.

FLANGE WIDTH	STIFFENER THICKNESS & WELD SIZE
Less than 8 1/4"	1/4" & 3/16"
8 1/4" to 12 1/4"	3/8" & 1/4"
12 1/4" to 16 1/2"	1/2" & 5/16"
16 1/2" to 20 3/4"	5/8" & 3/8"

   - 3.2. Bolting and Fasteners
     - 3.2.1. Ordinary steel-to-steel connections, simple span framing, and beam/girder-to-bearing plates are the standard connection used throughout the design drawings, unless noted otherwise:
       - 3.2.1.1. Use A325N bolts or tension-controlled bolts.
       - 3.2.1.2. Tighten these fasteners to a "snug tight" condition.
       - 3.2.1.3. Where a steel-to-steel connection is not shown, provide a framed connection per AISC for one half the total uniform load capacity of the beam for the span and steel specified.
     - 3.2.2. Fasteners and washers shall not be reused. Scrap dirty, rusted, or water-contaminated bolt assemblies.
   - 3.3. Reduced Beam Sections
     - 3.3.1. Fabrication of the reduced flange sections of beams used in SLRS is restricted to mechanically guided thermal cutting processes. Freehand cutting is not permitted.
     - 3.3.2. Flange cuts shall meet the requirements of AISC 358.
     - 3.3.3. Repair of gouges, notches, mill imperfections, shall conform to the requirements of the AISC and AWS provisions.
   - 3.4. Weld Access Holes and Temporary Attachments
     - 3.4.1. Fabricate beam copes and weld access holes using the geometry described in AISC 360 Section J1.6.
     - 3.4.2. Runoff tabs are to be removed unless noted otherwise.
   - 3.5. Backup Bars: Remove backup bars from all beam bottom flange connections in demand critical welds, unless noted otherwise. Backgouge the root and weld to sound metal. Reweld the gouged area and add a 5/16" reinforcing fillet weld.
   - 3.6. Protected Zones: No connections, other than those on the design drawings, shall be made within the protected zone of the SLRS as identified in AISC 341.
     - 3.6.1. Locate headed studs, welds, miscellaneous metal, etc outside of the protected zone.
     - 3.6.2. Paint the protected zones with bright paint before and after fire coating operations to identify them.
   - 3.7. All welds not noted on drawings shall be minimum 1/4" fillet welds.
   - 3.8. All structural steel members shall be considered as an unrestrained fire-resistance-rated assembly.
4. Welding of Reinforcing Steel or Bolts
   - 4.1. Reinforcing Bars: Do not weld rebar except as specifically detailed in the drawings. In such cases, use only AWS standards. Do not substitute reinforcing bars for deformed bar anchors, structural bolts, or headed stud anchors.
   - 4.2. Do not weld anchor bolts, including "tack" welds.
   - 4.3. Headed Stud Anchor welding and Deformed Bar Anchor welding shall conform to the manufacturer's specifications.

OPEN WEB STEEL JOISTS AND GIRDERS

1. All open web steel joist and girders shall be fabricated and erected in accordance with the latest edition of Steel Joist Institute (SJI), "Standard Specifications and Code of Standard Practice."
2. Joists or girders with slopes greater than 1/2" per foot shall be designed to meet or exceed the load capacities, listed in the SJI load tables, of the joist or girder sizes indicated on the framing plan, as if the joists or girders were installed level.
3. Provide special bearing ends to accommodate slopes from sloped joists, sloped girders or sloped bearing conditions.
4. Modifications to any joist or girder, including holes through the top and bottom chords, without the written consent and direction from the manufacturer is not allowed.
5. Design loads, unless noted otherwise:
   - 5.1. Wind loads (W) shown are calculated using ASCE 7.
   - 5.2. Seismic loads (E and Em) shown are calculated using ASCE 7.
   - 5.3. Gravity loads (D, L, S, etc.) shown are Allowable Stress (Working Stress) levels.
   - 5.4. Loads shown are at levels to be used directly by the Load Combinations from Section 1605 of the IBC without further adjustment.
   - 5.5. Allowable stress increases are permitted as allowed by the referenced standard being used for design.
6. The deflection of all open web joists and girders shall be limited to L/240 for total load and L/360 for live load, unless noted otherwise.
7. A certificate of compliance must be submitted to the building official upon completion of fabrication per IBC 2207.5.

METAL DECKING

1. Steel deck shall comply with the latest requirements of the Steel Deck Institute.
2. Steel deck material shall comply with the manufacturer's ICC Report and have a minimum yield strength of 33ksi.
3. All deck shall be 3-span continuous minimum. In areas where 3-span conditions are not possible, the contractor shall provide heavier gauge deck as required to provide the equivalent loading of the specified deck under a 3-span condition.
4. Steel roof deck shall not be used to support loads from plumbing, HVAC ducts, light fixtures, architectural elements, or equipment of any kind, unless specifically noted.
5. Conduits are permitted in deck slabs subject to local code requirements and fire rating considerations. When conduit is installed in the slab, it shall be limited to conduits having a diameter of 1" or less, or less than 1/3 the concrete cover, and no crossovers occur, and conduit is spaced at least 18" apart with a 3/4" minimum cover.
6. All members supporting deck shall be dry before welding.
7. Crimp seams before button punching or welding interlocking seams.
8. Where deck is to receive sprayed-on fire proofing, painted deck shall be coated with special paint that will allow the sprayed-on fire proofing to adhere to the painted deck.
9. All welds performed on the steel deck are to be painted.
10. Steel deck shall be galvanized (G60) when used above or below mechanical equipment rooms.
11. Steel floor deck shall be phosphatized/painted, composite, with interlocking side seams with the following minimum properties (LW = Light weight concrete, NW = Normal weight concrete):
    Type/Ga------S(in3/ft)-------I (in4/ft)--------Concrete (Total)----------Allowable shear value----------Notes
    W3/20---------0.534---------0.896---------3 1/2"(6 1/2) NW--------2298 plf for 9'-0" span----------Typ. Floor
    - 11.1. Weld deck to supporting framing members with 3/4" diameter puddle welds at the following spacing (Closer spacings may be used to develop minimum shear requirements):
      - 11.1.1. 12" on center to supports perpendicular to deck corrugations (4 welds per 36" wide sheet).
      - 11.1.2. 12" on center to all supports parallel to deck corrugations.
    - 11.2. Attach interlocking seams with 3/16" diameter button punch at 18" on center or 1 1/2" top seam weld at 36" on center between adjacent pieces of deck. Closer spacings may be used to develop minimum shear requirements.
    - 11.3. Provide a 2" minimum bearing at all supports.
    - 11.4. Butt all end splices.
12. Steel roof deck shall be galvanized with interlocking side seams with the following minimum properties:
    Type/Ga----------S(in3/ft)----------I (in4/ft)----------Allowable shear value----------Notes
    1 1/2" B/20---------0.235----------0.216----------1078 plf for 7'-0" span----------Typ. Roof
    1 1/2" B/18---------0.322----------0.302----------1711 plf for 6'-0" span----------Where Indicated
    - 12.1. Weld steel roof deck to supporting framing members with 3/4" diameter puddle welds at the following spacings (Closer spacings may be used to develop minimum shear requirements):
      - 12.1.1. 6" on center to all supports perpendicular to deck corrugations (7 welds per 36" sheet).
      - 12.1.2. 6" on center to all supports parallel to deck corrugations.
      - 12.1.3. Interlocking side seams between adjacent pieces of decking may be attached with "Verco Sidelap Connections" by Verco Manufacturing (VSC) or "ASC DeltaGrip side seam connection" by ASC Steel Deck at 8" on center minimum.
    - 12.2. The Contractor may submit, for review and approval, the manufacturer's ICC report of an alternate method of deck attachment. The alternate method shall provide minimum deck diaphragm shear values equal to or greater than those noted above. The alternate method shall be approved by the engineer of record prior to the substitution.
    - 12.3. Provide a 2" minimum bearing and an 4" lap at the splice points, centering the splice over the support.

COMPOSITE STEEL BEAMS

1. All beams supporting concrete over metal deck shall have headed stud anchors.
2. Composite beams are indicated on the framing plans with a suffix (nn). The number inside parentheses indicates the number of studs for this beam or section of beam. Beams or sections of beams shall have the studs spaced uniformly over the beam or section. The maximum spacing shall not exceed 36" on center.
3. All headed stud anchors shall conform to ASTM A-108. Dimensions shall comply with AISC. Use 3/4" diameter studs. Headed studs shall extend 1 1/2" minimum (2" maximum) above the top of the steel deck after welding. Headed studs shall be applied through the metal deck to the top flange of the steel section or welded directly to the steel section.
4. The minimum on center spacing of stud connectors shall be 6 diameters along the longitudinal axis of the supporting composite beam and 4 diameters transverse to the longitudinal axis of the supporting composite beam.
5. Composite beams shall be precambered as shown on plans. On the plans, c=0.00" denotes precamber dimension (upward) in inches.
6. Camber tolerance shall be +1/4", -0".
7. Slab shall be screeded to a constant thickness as indicated.

COLD FORMED STEEL

1. Cold Formed Steel Framing
   - 1.1. The design of cold formed steel and low alloy steel structural members shall be in accordance with AISI-NASPEC, North American Specification for the Design of Cold-Formed Steel Structural Members.
   - 1.2. The design, installation and construction of cold formed steel for structural and non-structural framing shall be in accordance with AISI-CFSD, Standard for Cold-Formed Steel Framing - General Provisions.
   - 1.3. All steel framing members shall comply with ASTM A1003.
   - 1.4. Follow all manufacturers' guidelines and recommendations for all products.
   - 1.5. Unless noted otherwise, all welded connections shall be done according to AWS standards.
   - 1.6. All interior non-bearing steel stud walls that extend above the ceiling but do not attach to the structure above shall be braced with diagonal metal-stud braces (45°). The Kl/r ratio of the brace shall not exceed 200 and shall not be spaced further apart than 10'-0" on center. Connect diagonal braces to the top of the steel stud walls and to the top flange of the steel beams with (2) #10 tek screws minimum. Where a concrete deck occurs above, use two powder-driven fasteners per diagonal brace. Other approved methods may be used.
   - 1.7. Anchor bolts: See steel section of general notes.
2. Connection Hardware
   - 2.1. Exterior framing shall be attached to primary structure to provide vertical and lateral drift as indicated in these drawings. The "DriftTrack DTSL" by the Steel Network or equivalent is suitable to meet this requirement. Inside and outside corner joints shall be detailed to accommodate the lateral drift indicated. See architectural drawings for joint location and details.
   - 2.2. All connection hardware (examples: "StiffClip", "VertiClip", "DriftClip", "BridgeClip", etc) shown shall be supplied by:
     The Steel Network, Inc.
     3221 Wellington Court
     Raleigh, NC 27615
     Phone: (888) 474-4876
     www.steelnetwork.com
   - 2.3. Install all hardware per the manufacturer's guidelines and recommendations.
   - 2.4. The contractor may submit an alternate connection method for approval by Dunn Associates, Inc. and the Architect.

SPECIAL INSPECTION & STRUCTURAL OBSERVATION REQUIREMENTS

1. Special Inspections and Testing:
   - 1.1. Special inspection and testing as required per the construction documents and per Chapter 17 of the IBC shall be provided for this project unless waived by the Building Official.
   - 1.2. An independent agency/agencies shall be employed by the Owner, shall perform the special inspection and testing services required.
   - 1.3. Structural observations are required per the construction documents, and per the IBC, and shall be required for this project unless waived by the Building Official. The Engineer of Record or his representative shall perform structural site observations as required.
   - 1.4. Structural observations are required per the construction documents, and per the IBC, and shall be required for this project unless waived by the Building Official. A registered design professional employed by the Owner shall perform the structural observations as required.
   - 1.5. Structural observations are not required for this project. However, Dunn Associates has been contracted by the Architect/Owner to make structural observations as deemed necessary.
   - 1.6. Structural observations are not required for this project. However, the Engineer of Record or his representative may make structural observations as deemed necessary.
   - 1.7. The special inspection and testing requirements of this section of the General Structural Notes serve as the Engineer of Record's statement of special inspections and structural observations required by Chapter 17 of the IBC.
2. Contractor Responsibilities
   - 2.1. Each Sub-Contractor responsible for the construction of a main wind or seismic force resisting system, a designated seismic system, or a wind or seismic resisting element or component shall submit a written statement of responsibility to the Building Official and Owner prior to commencing with the work involved. It shall contain acknowledgement of awareness of the special inspection and testing requirements.
   - 2.2. The Contractor is to coordinate and cooperate with all the required inspections, testing and/or structural observations required for the project. The Contractor is not to proceed with subsequent work until required inspections, testing and/or structural observations have been provided.
   - 2.3. The Contractor is to correct all work found to be deficient, and re-test at no additional cost to the Owner.
   - 2.4. The Contractor is to notify the Engineer of Record at least (2) days prior to any required structural observations.
3. Special Inspector Responsibilities:
   - 3.1. Each Special Inspector shall be a qualified person who shall demonstrate competence, to the satisfaction of the Building Official, for the inspection of the particular type of construction or operation requiring special inspection.
   - 3.2. Special Inspectors shall keep records of their inspections. They shall submit inspection reports to the Building Official and the Architect/Engineer.
   - 3.3. Inspection reports shall indicate whether the work inspected was or was not completed in accordance with the construction documents and the referenced building codes.
   - 3.4. Non-conforming work and/or discrepancies shall be brought to the Contractor's immediate attention for correction.
   - 3.5. The Special Inspector is to notify the Architect/Engineer of any non-conforming work or discrepancies that the Contractor cannot readily correct.
   - 3.6. Any uncorrected non-conforming work or discrepancies shall be brought to the attention of the Architect/Engineer and Building Official prior to completion of that phase of the work.
4. Quality Control Submittals for Structural Steel
   - 4.1. Furnish Level III nondestructive testing (NDT) personnel certifications.
   - 4.2. Furnish welder qualification records to verify project welders are tested and qualified in accordance with AWS D1.1 before welding structural or miscellaneous steels, D1.3 before welding sheet steels (10 ga and thinner), and D1.4 before welding reinforcing steel. Submit documentation to the approved inspection agency for review before welding.
     - 4.2.1. Special, restricted welder qualification testing is required for welders joining the bottom-flange through the weld access hole connection in demand critical welds. Qualify welders for the minimum groove angle and maximum deposition rate used in production. Follow the instructions for supplemental qualification testing in AWS D1.8, Section 5.1. Qualification testing must take place within two years from the start of this project.
   - 4.3. The fabricator/erector shall maintain a system by which the welder who has welded a joint or member can be identified. Stamps, if used shall be the low stress type.
   - 4.4. Furnish welding procedures that comply with AWS D1.1, D1.3, D1.4, D1.8, as required by the project. Welding procedures shall be made available to welders and inspectors.
     - 4.4.1. Furnish weld filler metal product data sheets identifying optimum welding parameters and storage conditions with each welding procedure submittal.
     - 4.4.2. Identify the maximum welding heat input per inch of weld (KJ/in) permitted by the welding procedures.
     - 4.4.3. Identify the maximum deposition rate that will be used while welding on any demand critical weld.
     - 4.4.4. Furnish typical welding filler metal Certificates of Conformance that identify the WPS Heat Input Envelope.
   - 4.5. Furnish a preliminary welding repair procedure to follow should welding repairs be required within the Seismic Protected Zone.
   - 4.6. Provide bolt storage and installation procedures to the approved inspection agency for review.
   - 4.7. Provide mill/material test reports (MTR) or certificates of conformance (CofC) that verify compliance of furnished materials to the requirements of the approved contract documents. MTRs or CofCs are required for structural shapes, plate, metal deck, fasteners, headed studs, DBAs, weld filler metal, and bolt assemblies used as primary, load-bearing members. Maintain the heat number traceability of structural shapes and plate used as primary, load bearing members.
5. Structural Steel Non-Destructive Testing (NDT)
   - 5.1. NDT personnel will:
     - 5.1.1. Qualify in accordance with the recommended practices of the American Society of Nondestructive Testing, SNT-TC-1A, latest edition.
     - 5.1.2. Pass eye examinations meeting: (1) ASTM requirements at least once a year, and (2) AWS D1.1 every three years.
     - 5.1.3. Be certified in accordance with the AWS QC-1, latest edition.
     - 5.1.4. Level III must be qualified by ASNT testing in the applicable method under review.
   - 5.2. Only Level II and Level III technicians, qualified by testing in the applicable method, are permitted to interpret nondestructive testing results.
   - 5.3. Only Senior Certified or Certified Welding Inspectors (SCWI, CWI) are permitted to evaluate welds. Certified Associate Welding Inspectors may evaluate welds when under the direct supervision of a SCWI and/or CWI.
   - 5.4. Approved Inspection Agency will certify the following:
     - 5.4.1. Level III inspector has reviewed the NDT procedures
     - 5.4.2. Project ultrasonic testing technicians, testing demand critical welds, are trained and qualified in accordance with AWS D1.8, Annex E
     - 5.4.3. That the Inspection Agencies' ultrasonic testing procedures are qualified by weld mockups similar to AWS D1.1, Annex S
6. Section 1705: Special Inspections
   - 6.1. Fabricators (1704.2.5): All offsite fabrication of structural members (structural steel, precast concrete, wood glulams, etc.) shall be special inspected as required by the IBC, except work performed by fabricators registered and approved to perform work without special inspection. Approved fabricators shall submit a certificate of compliance to building official at the completion of fabrication.
   - 6.2. Steel (1705.2): Special inspection is required during the fabrication of any load-bearing members and assemblies, unless the fabricator and/or erector demonstrate prior approval by the jurisdiction where fabricated steel will be installed.
     - 6.2.1. Perform all welding and welding special inspection activities in accordance with AWS D1.1, D1.3, D1.4, and D1.8, and AISC 360 Chapter N as appropriate for the material form and welding methods employed. Approved methods and acceptance criteria are established in these codes.
     - 6.2.2. Perform all bolting and bolting inspection in accordance with AISC 360 Specification for Structural Steel Buildings Using A325 and A490 Bolts and AISC 360 Chapter N.
     - 6.2.3. Continuous Special Inspection of welding is required for:
       - 6.2.3.1. Complete and partial penetration welds, except flare-bevel groove welds
       - 6.2.3.2. Multi-pass fillet welds
       - 6.2.3.3. Single-pass fillet welds larger than 5/16"
     - 6.2.4. Continuous Special Inspection of pretensioned and slip-critical bolts is required as follows:
       - 6.2.4.1. Verify surface condition of all faying surfaces attached with pretensioned fasteners is in accordance with AISC Specification for Structural Joints Using A325 and A490 Bolts.
       - 6.2.4.2. Witness pretensioned and slip-critical fastener installations to verify the methods are controlled in accordance with the AISC Specification for Structural Joints Using A325 and A490 Bolts.
     - 6.2.5. Periodic Special Inspection of welding is required for (Inspect 25% of welds while welding operations are taking place):
       - 6.2.5.1. Single-pass fillet welds equal to or smaller than 5/16"
       - 6.2.5.2. Floor and roof deck arc spot, puddle welds
       - 6.2.5.3. Welding of stairs and railing systems, cold formed steel studs/joists.
       - 6.2.5.4. Welded studs used in diaphragms.
       - 6.2.5.5. Welded sheets for cold formed steel shear walls.
     - 6.2.6. Periodic Special Inspection of all bolts is required as follows:
       - 6.2.6.1. Verify the proper grade of fasteners are installed where indicated in the approved construction drawings.
       - 6.2.6.2. Verify the storage and cleanliness of high strength fasteners meets AISC requirements.
       - 6.2.6.3. Store fasteners in protected storage until released for use. Temperature control is not required. Do not use fastener components showing rust, dirt, or grit. Cleaning or modifying fastener components from the as-delivered condition is not permitted.
       - 6.2.6.4. Verify the faying surfaces have been brought into firm contact, the bolts are in a snug tight condition, and that washers have been used as required.
     - 6.2.7. Periodic Special Inspection of pretensioned and slip-critical bolts is required as follows:
       - 6.2.7.1. Confirm complete fastener assemblies and the wrench systems used are suitable for pretensioned and slip-critical installations.
       - 6.2.7.2. Test fastener combinations and calibrate wrench systems using calibrated tension calibrators, Skidmore-Wilhelm, or equal, in accordance with the AISC Specification for Structural Joints Using A325 or A490 Bolts.
       - 6.2.7.3. Verify high strength fasteners are installed to a snug tight condition either before pretensioning or as a final condition where no other bolting requirements are imposed. Do not intermingle lots verified for pretensioned or slip-critical installations.
       - 6.2.7.4. Witness bolting operations while the contractor performs pretensioning using match-marked, turn-of-the-nut method, or when using DTIs, or twist-off bolts.
     - 6.2.8. Non-Destructive Testing (NDT) of Welds is required as follows:
       - 6.2.8.1. Fabricators will visually inspect all welds for conformance to the approved construction drawings before releasing items for installation.

APRIL 21, 2014
BID SET

NOTE:
THESE STRUCTURAL DRAWINGS ARE BASED ON ARCHITECTURAL DRAWINGS DATED APRIL 10, 2014

DIMENSIONS AND ELEVATIONS, AS THEY RELATE TO THE BUILDING IN GENERAL, i.e. GRID TO GRID DIMENSIONS OR DECK BEARING ELEVATIONS, ARE SUPPLIED BY THE ARCHITECT. THEY ARE PROVIDED ON THE STRUCTURAL PLANS AND DETAILS FOR THE CONVENIENCE OF THE CONTRACTOR. VERIFY DIMENSIONS AND ELEVATIONS WITH ARCHITECTURAL DRAWINGS.

DUNN ASSOCIATES, INC
Consulting Structural Engineers
WWW.DUNN-SE.COM
PH: 801-575-8877 FAX: 801-575-8875

CRSA
649 E. South Temple
Salt Lake City, UT 84102
801.355.5915

MWL
11798 N. Lakeridge Pkwy.
Ashland, VA 23005
804-228-7473

State of Utah
Department of Administrative Services
Division of Facilities Construction & Management
4110 State Office Building
Salt Lake City, Utah 84114
Phone: (801) 538 - 3018
Fax: (801) 538 - 3267

DIVISION OF FACILITIES CONSTRUCTION AND MANAGEMENT
REVIEWED FOR CODE COMPLIANCE
SIGNATURE: Ernie Gelb
DATE: 08-05-2014

PROFESSIONAL STRUCTURAL ENGINEER
No. 295747
TAIT A. KETCHAM
04/21/2014
STATE OF UTAH

ARCHITECT-ENGINEER STAMP

Unified State Laboratory Module 2
4451 South 2700 West,
Taylorsville, UT 84118

DFCM #: 13020300
Project #: 13062

DATE:	ISSUE TYPE:
APRIL 21, 2014	BID SET
CHECKED BY	TAK
DRAWN BY	SJS

GENERAL STRUCTURAL NOTES

S002
VOLUME 1

GENERAL STRUCTURAL NOTES

6.2.8.2. Test all complete joint penetration welds joining primary structural members 5/16" or thicker, by radiographic or ultrasonic testing. Test in accordance with AWS D1.1, Section 6.

6.2.8.3. Ultrasonically test base metal thicker than 1 1/2" for material discontinuities when that material is subjected to through-thickness weld shrinkage strains. (e.g. column flange of the beam-to-column, or column to base plate, complete joint penetration welds)

6.2.8.4. Magnetic Particle Test is required for the following items:

6.2.8.4.1. All temporary attachment or unauthorized weld sites or repairs inside the Protected Zones after finishing and grinding operations

6.2.8.4.2. Any welds made in the k-zone

6.2.8.4.3. 25% of all beam-to-column complete joint penetration welds

6.2.8.4.4. Beam copes and weld access holes made in rolled shapes with flange thickness greater than 1 1/2" or in built-up shapes with webs thicker than 1 1/2"

6.2.8.4.5. Weld tab removal sites.

6.2.8.5. Amount of NDT is permitted to be reduced according to AISC 341, Appendix Q5.2(g) and (h) if appropriate criteria are met and if approved by the building official and engineer of record.

6.2.9. Special inspections and Testing for Non-Shrink Grout shall be required as follows:

6.2.9.1. Periodic special inspection verifying the use of required mix design.

6.2.9.2. Samples of non-shrink grout shall be tested for compressive strength at least daily, with additional tests required for each additional 10 bags mixed per day.

6.3. Concrete (1705.3): Concrete construction shall be special inspected according to Table 1705.3. In the absence of sufficient data or documentation showing conformance to quality standards for concrete materials, testing shall be required to determine material properties under the direction of the building official according to Chapter 3 of ACI 318.

6.4. Masonry (1705.4):

6.4.1. Engineered masonry and vertical masonry foundation elements shall be special inspected per TMS 402 / ACI 530 / ASCE 5 and TMS 602 / ACI 530.1 / ASCE 6.

6.4.2. Empirically designed masonry, glass unit masonry, and brick veneer in Risk Category IV, designed per IBC Sections 2109, 2110 or Chapter 14, shall comply with TMS 402 / ACI 530 / ASCE 5 Level B quality assurance.

6.4.3. Empirically designed masonry, glass unit masonry, and brick veneer, designed per IBC Sections 2109, 2110, or Chapter 14, in Risk Categories I, II, III, and masonry foundation walls constructed per IBC Tables 1807.1.6.3 (1 to 4), and masonry fireplaces, heaters, or chimney's constructed in accordance with IBC Sections 2111, 2112, and 2113 are not required to be special inspected.

6.5. Soils (1705.6): Existing site soil conditions, fill placement and procedure and load-bearing requirements shall be special inspected to verify compliance with the approved soils report and Table 1705.6. Where total depth of controlled fill is 12" or less, the special inspector shall verify that the in-place dry density of the compacted fill is not less than the 90% of the maximum dry density at optimum moisture content according to ASTM D 1557.

6.6. Sprayed fire-resistant materials (1705.13): Special inspections shall be performed for sprayed fire-resistant materials applied to structural elements and decks shall be in accordance with Sections 1705.13.1 through 1705.13.6 and based on the fire-resistance design as designated in the architectural drawings.

6.7. Mastic and intumescent fire-resistant coatings (1705.14): Special inspections for mastic and intumescent fire-resistant coatings applied to structural elements and decks shall be in accordance with AWCI 12-B and based on the fire-resistance design as designated in the architectural drawings.

6.8. See architectural drawings for additional inspections pertaining to EIFS (1705.15), fire resistant penetrations and joints (1705.16), or smoke control systems (1705.17).

7. Section 1705.11: Special Inspections for Seismic Resistance

7.1. Structural steel (1705.11.1): See special inspections for steel above.

7.2. Cold-formed steel framing (1705.11.3): Periodic special inspection is required during welding operations of elements of the seismic-force-resisting system. Periodic special inspection is required for screw attachment, bolting, anchoring and other fastening of components within the seismic-force-resisting system, including shear walls, braces, diaphragms, collectors and hold-downs.

7.3. Designated Seismic Systems (1705.11.4): The Special Inspector shall examine designated seismic systems requiring seismic qualifications in accordance with Section 1705.12.3, and verify that label, anchorage or mounting conforms to the certificate of compliance.

7.3.1. Designated Seismic Systems include all architectural, mechanical, and electrical components included in chapter 13 of ASCE 7 including components that are required to function for life safety purposes after and earthquake, including fire protection sprinkler systems, components that contain hazardous materials, and components in a Risk Category IV that are needed for continued operation of the facility, or if its failure could impair continued operation of the facility.

7.3.2. Components that are exempt from special inspection are listed in Section 13.1.4 of ASCE 7.

7.3.3. Refer to the architectural, mechanical, electrical drawings for all designated seismic systems required for their individual disciplines.

7.4. Architectural Components (1705.11.5): Provide periodic special inspection of architectural components. See specific discipline drawings.

7.5. Mechanical and Electrical Components (1705.11.6): Special inspection for mechanical and electrical components shall be provided per Section 1705.11.6 and the specific discipline drawings.

7.6. Storage Racks (1705.11.7): Periodic special inspection of the anchorage of storage racks 8 feet in height or greater is required.

8. Section 1705.12: Structural Testing for Seismic Resistance

8.1. Concrete Reinforcement (1705.12.1): Where reinforcement complying with ASTM A 615 is used to resist earthquake-induced flexural and axial forces in special moment frames, special structural walls and coupling beams connecting special structural walls in structures assigned to Seismic Design Category B, C, D, E or F, the reinforcement shall comply with section 21.1.5.2 of ACI 318. Certified mill test reports shall be provided for each shipment of such reinforcement. Where ASTM A 615 reinforcing steel is to be welded, chemical tests shall be performed to determine weldability in accordance with Section 3.5.2 of ACI 318.

8.2. Structural steel (1705.12.2): See special inspections for steel above.

8.3. See manufacturer's seismic certification of compliance for non-structural components, per 1705.12.3.

9. Special Inspections for Wind Resistance (1705.10):

9.1. Cold-formed Steel Light Framed Construction (1705.10.2): Periodic special inspection is required during welding operations of elements of the main wind-force resisting system. Periodic special inspection is required for screw attachment, bolting, anchoring and other fastening of components within the main wind-force resisting system, including shear walls, braces, diaphragms, collectors (drag struts) and hold-downs.

9.2. Wind Resisting Components (1705.10.3): Periodic special inspection is required for the following systems and components:

1. Roof cladding
2. Wall cladding

10. Structural Observations: Structural Observations are [required] [not required] for this project per 1704.5 of the IBC.

10.1. Structural Observations of the following stages of construction shall be provided.The Contractor shall notify the Engineer of Record at least 2 days prior to the following stages of construction so that the Engineer may have the opportunity to review the work.

10.1 Structural observations are not required, however site observations are part of the Dunn Associates, Inc. contract with the Architect/Owner. The stages of construction listed below will serve as suggested stages of construction to be observed. The Contractor shall notify the Engineer of Record at least 2 days prior to the following stages of construction so that the Engineer may have the opportunity to review the work.

10.1.1. Initial placing of any concrete, including but not limited to: footings, shear walls, slabs on grade or concrete over steel deck

10.1.2. Initial grout pours for masonry walls

10.1.3. Initial erection of structural steel

10.1.4. Completion of structural roof deck

10.1.5. Initial finish work

10.2. Site observation reports will be provided to the Architect. Distribution to the Contractor, Owner, and/or Building Official will be through the Architect.

11. Seismic/Wind Main Force Resisting Systems That Require Special Inspections

11.1. Concrete Shear Walls

11.2. Steel Moment Frames

11.3. Buckling Restrained Braced Frames

11.4. Metal Roof Deck

11.5. Concrete diaphragms (suspended)

11.6. Concrete diaphragms (slab-on-grade)

LEGEND OF MARKS AND ABBREVIATIONS

AB	Anchor Bolt	JST	Joist
ABV	Above		
ALT	Alternate	K	Kip(S) = 1000 Pounds
ARCH	Architect	KLF	Kips Per Lineal Foot
		KSF	Kips Per Square Foot
BLDG	Building		
BLW	Below	LB	Pounds (#)
BM	Beam	LOC	Location
BOTT	Bottom		
BRB	Buckling Restrained Brace	MAS	Masonry
BRDG	Bridging	MAX	Maximum
BRG	Bearing	MECH	Mechanical
BTW	Between	MEZZ	Mezzanine
		MFR	Manufacturer
CGS	Center of Gravity of Strand	MIN	Minimum
CJ	Control Joint	MISC	Miscellaneous
CJP	Complete Joint Penetration	MTL	Metal
CL	Center Line		
CMU	Concrete Masonry Unit	NTS	Not To Scale
COL	Column		
CONC	Concrete	oc	On Center
CONN	Connection	OPNG	Opening
CONT	Continuous	OPP	Opposite
COORD	Coordinate		
CTR	Center	PCF	Pounds per Cubic Foot
		PEN	Penetrate or Penetration
DB	Deck Bearing	PERP	Perpendicular
DBA	Deformed Bar Anchor	PFT	Pre-Fabricated Truss
DBL	Double	PL	Plate
DCW	Demand Critical Weld	PLF	Pounds per Lineal Foot
DET	Detail	PREFAB	Prefabricated
DIA	Diameter	PSF	Pounds per Square Foot
DIM	Dimension	PSI	Pounds per Square Inch
DWG	Drawing	PT	Post Tension
(E)	Existing	REINF	Reinforce
EA	Each	REQD	Required
EF	Each Face	RTU	Roof Top Unit
EL	Elevation		
ELEC	Electrical	SCHED	Schedule
ENGR	Engineer	SIM	Similar
EQ	Equal	SOG	Slab on Grade
EQUIP	Equipment	STD	Standard
EQ SP	Equally Spaced	STIFF	Stiffener
EW	Each Way	STL	Steel
EJ	Expansion Joint	STRUCT	Structural
EXT	Exterior	SW	Shear Wall
FLR	Floor	T&B	Top and Bottom
FND	Foundation	TEMP	Temperature
FTG	Footing	THRU	Through
		T/	Top of
ga	Gage	TYP	Typical
GALV	Galvanized		
GSN	General Structural Notes	UNO	Unless Noted Otherwise
HORIZ	Horizontal	VERT	Vertical
HSA	Headed Stud Anchor		
HSS	Hollow Structural Section	W/	With
		WWR	Welded Wire Reinforcement
ICBO	International Conference of Building Officials	WP	Working Point
IBC	International Building Code		
ICC	International Code Council		
INT	Interior		

DEFERRED SUBMITTALS

1. Items requiring deferred submittals that are listed below are to be designed and fabricated by the manufacturer according to specifications given in the construction documents.
   - 1.1. Steel Stairs (by steel stair manufacturer)
   - 1.2. Buckling Restrained Braces (by supplier) to meet the applicable requirements of AISC 341-10
   - 1.3. Exterior Facade Framing and Connections (by supplier) showing compliance with drift requirements
   - 1.4. Veneer Anchors where the distance between the inside face of the veneer and the steel framing exceeds 4 1/2" (by supplier)
   - 1.5. Ceilings and Non-Structural Walls and Partitions (by supplier)
   - 1.6. Seismic Bracing for mechanical, electrical and plumbing components
2. These deferred submittals shall first be submitted to the project architect and/or engineer for review and coordination. Upon completion of the architect/engineer review, the architect/engineer will submit the deferred submittals to the Building Official for review and approval. The submittal to the Building Official shall include a letter stating that the architect/engineer review has been performed and that the plans and calculations for the deferred submittal items are found to be in general conformance with the design drawings with no exceptions.
3. The final submittal shall be signed and sealed by a Professional Engineer licensed in the state in which construction will occur and shall be available at the jobsite throughout construction.
4. Construction related to deferred submittals shall not commence until the Building Official has approved the submittal.

MAXIMUM STORY DRIFT TABLE

FLOOR	FLOOR TO FLOOR HEIGHT (FEET)	ELASTIC STORY DRIFT		INELASTIC STORY DRIFT	
		STORY DRIFT (INCH)	DRIFT RATIO	STORY DRIFT (INCH)	DRIFT RATIO
PENTHOUSE ROOF	18' - 8"	0.32	.0015	1.60	.0075
PENTHOUSE LEVEL	16' - 0"	0.32	.0017	1.60	.0085
LEVEL 3	16' - 0"	0.26	.0014	1.30	.0070
LEVEL 2	16' - 0"	0.18	.0009	0.90	.0045

APRIL 21, 2014
BID SET

NOTE:
THESE STRUCTURAL DRAWINGS ARE BASED ON ARCHITECTURAL DRAWINGS DATED APRIL 10, 2014

DIMENSIONS AND ELEVATIONS, AS THEY RELATE TO THE BUILDING IN GENERAL, i.e. GRID TO GRID DIMENSIONS OR DECK BEARING ELEVATIONS, ARE SUPPLIED BY THE ARCHITECT. THEY ARE PROVIDED ON THE STRUCTURAL PLANS AND DETAILS FOR THE CONVENIENCE OF THE CONTRACTOR. VERIFY DIMENSIONS AND ELEVATIONS WITH ARCHITECTURAL DRAWINGS.

DUNN ASSOCIATES, INC
Consulting Structural Engineers
WWW.DUNN-SE.COM
PH: 801-575-8877 FAX: 801-575-8875

CRSA
649 E. South Temple
Salt Lake City, UT 84102
801.355.5915

MWL
11798 N. Lakeridge Pkwy.
Ashland, VA 23005
804-228-7473

State of Utah
Department of Administrative Services
Division of Facilities Construction & Management
4110 State Office Building
Salt Lake City, Utah 84114
Phone: (801) 538 - 3018
Fax: (801) 538 - 3267

DIVISION OF FACILITIES CONSTRUCTION AND MANAGEMENT
REVIEWED FOR CODE COMPLIANCE
SIGNATURE: Ernie Gelle
DATE: 08-05-2014

PROFESSIONAL STRUCTURAL ENGINEER
No. 295747
TAIT A. KETCHAM
04/21/2014
STATE OF UTAH

ARCHITECT-ENGINEER STAMP

Unified State Laboratory Module 2
4451 South 2700 West,
Taylorsville, UT 84118

DFCM #: 13020300
Project #: 13062

DATE:	ISSUE TYPE:
APRIL 21, 2014	BID SET
CHECKED BY	TAK
DRAWN BY	SJS

GENERAL STRUCTURAL NOTES

S003
VOLUME 1

TABLE 1705.3: REQUIRED VERIFICATION AND INSPECTION OF CONCRETE CONSTRUCTION

VERIFICATION AND INSPECTION	CONTINUOUS	PERIODIC	REFERENCED STANDARD [a]	IBC REFERENCE
1. Inspection of reinforcing steel, including prestressing tendons and placement.	-	X	ACI 318: 3.5, 7.1-7.7	1910.4
2. Inspection of reinforcing steel welding in accordance with Table 1705.2.2, Item 2b	-	-	AWS D1.4 ACI 318: 3.5.2	-
3. Inspection of anchors cast in concrete where allowable loads have been increased or where strength design is used.	X	-	ACI 318: 8.1.3, 21.2.8	1908.5 1909.1
4. Inspection of anchors post-installed in hardened concrete members. [b]	-	X	ACI 318: 3.8.6, 8.1.3, 21.2.8	1909.1
5. Verifying use of required design mix.	-	X	ACI 318: Ch 4, 5.2-5.4	1904.2, 1910.2 1910.3
6. At the time fresh concrete is sampled to fabricate specimens for strength tests, perform slump and air content tests, and determine the temperature of the concrete.	X	-	ASTM C 172 ASTM C 31 ACI 318: 5.6, 5.8	1910.10
7. Inspection of concrete and shotcrete placement for proper application techniques.	X	-	ACI 318: 5.9, 5.10	1910.6, 1910.7 1910.8
8. Inspection for maintenance of specified curing temperature and techniques.	-	X	ACI 318: 5.11-5.13	1910.9
9. Inspection of prestressed concrete: a. Application of prestressing forces. b. Grouting of bonded prestressing tendons in the seismic-force-resisting system.	 X X	-	ACI 318: 18.20 ACI 318: 18.18.4	-
10. Erection of precast concrete members.	-	X	ACI 318: Ch. 16	-
11. Verification of in-situ concrete strength, prior to stressing of tendons in post-tensioned concrete and prior to removal of shores and forms from beams and structural slabs.	-	X	ACI 318: 6.2	-
12. Inspect formwork for shape, location and dimensions of the concrete member being formed.	-	X	ACI 318: 6.1.1	-

For SI: 1 inch = 25.4 mm.

a. Where application, see also Section 1707.1. Special inspection for seismic resistance.

b. Specific requirements for special inspection shall be included in the research report for anchor issued by an approved source in accordance with ACI 355.2 or other qualification procedures. Where specific requirements are not provided, special inspection requirements shall be specified by the registered design professional and shall be approved by the building official prior to commencement of the work.

TABLE 1705.2.2: REQUIRED VERIFICATION AND INSPECTION OF STEEL CONSTRUCTION OTHER THAN STRUCTURAL STEEL

VERIFICATION AND INSPECTION	CONTINUOUS	PERIODIC	REFERENCED STANDARD [a]	IBC REFERENCE
1. Material verification of cold-formed steel deck:				
a. Identification markings to conform to ASTM standards specified in the approved construction documents.	-	X	Applicable ASTM material standards	
b. Manufacturer's certified test reports.	-	X		
2. Inspection of welding:				
a. Cold-formed steel deck:				
1) Floor and roof deck welds.	-	X	AWS D1.3	
b. Reinforcing steel:				
1) Verification of weldability of reinforcing steel other than ASTM A 706.	-	X	AWS D1.4 ACI 318: Section 3.5.2	-
2) Reinforcing steel resisting flexural and axial forces in intermediate and special moment frames, and boundary elements of special structural walls of concrete and shear reinforcement.	X	-		
3) Shear reinforcement.	X	-		
4) Other reinforcing steel.	-	X		

For SI: 1 inch = 25.4 mm.

a. Where application, see also Section 1705.11. Special inspection for seismic resistance.

TABLE 1705.6: REQUIRED VERIFICATION AND INSPECTION OF SOILS

VERIFICATION AND INSPECTION TASK	CONTINUOUS DURING TASK LISTED	PERIODIC DURING TASK LISTED
1. Verify materials below shallow foundations are adequate to achieve the design bearing capacity.	-	X
2. Verify excavations are extended to proper depth and have reached proper material.	-	X
3. Perform classification and testing of compacted fill materials.	-	X
4. Verify use of proper materials, densities and lift thicknesses during placement and compaction of compacted fill.	X	-
5. Prior to placement of compacted fill, observe subgrade and verify that site has been prepared properly.	-	X

REQUIRED VERIFICATION AND INSPECTION OF STRUCTURAL STEEL DURING BOLTING OR WELDING

VERIFICATION AND INSPECTION	CONTINUOUS	PERIODIC	REFERENCED STANDARD
1. Required Special Inspections during bolting or welding [1, 2]			
a. Verify use of qualified welders	-	X	AISC 360-10 Table N5.4-2 and AISC 341-10 Table J6-2
b. Verify the control and handling of consumables			AISC 360-10 Table N5.4-2 and AISC 341-10 Table J6-2
1) Packing	-	X	
2) Exposure Control	-	X	
c. Verify no welding occurs over cracked tack welds	-	X	AISC 360-10 Table N5.4-2 and AISC 341-10 Table J6-2
d. Verify environmental conditions			AISC 360-10 Table N5.4-2 and AISC 341-10 Table J6-2
1) Wind speed within limits	-	X	
2) Precipitation and temperature	-	X	
e. Verify weld specification procedures are followed			AISC 360-10 Table N5.4-2 and AISC 341-10 Table J6-2
1) Settings on weld equipment	-	X	
2) Travel speed	-	X	
3) Selecting weld materials	-	X	
4) Shielding gas type/flow rate	-	X	
5) Preheat applied	-	X	
6) Interpass temperature maintained (min/max)	-	X	
7) Proper position (F, V, H, OH)	-	X	
f. Verify welding techniques			AISC 360-10 Table N5.4-2 and AISC 341-10 Table J6-2
1) Interpass and final cleaning	-	X	
2) Each pass within profile limitations	-	X	
3) Each pass meets quality requirements	-	X	
g. Verify fastener assemblies, of suitable condition, are placed in all holes and washers are positioned as required	-	X	AISC 360-10 Table N5.6-2 and AISC 341-10 Table J7-2
h. Verify joints are brought to the snug-tight condition prior to the pretensioning operation	-	X	AISC 360-10 Table N5.6-2 and AISC 341-10 Table J7-2
i. Verify fastener components not turned by the wrench are prevented from rotating	-	X	AISC 360-10 Table N5.6-2 and AISC 341-10 Table J7-2
j. Verify fasteners are pretensioned in accordance with RCSC Specification progressing from the most rigid point toward the free edges	-	X	AISC 360-10 Table N5.6-2 and AISC 341-10 Table J7-2
2. Additional required Special Inspections during bolting or welding in Seismic Design Categories C thru F			
a. Verify intermix of filler metals avoided unless approved	-	X	AISC 341-10 Table J7-2

1. (Note: Special inspection is not required during bolting of snug tight connections)
2. (Note: Special inspection is not required during bolting for pretensioned joints or slip-critical joints when installer is using the turn-of-nut method with matchmarking techniques, the direct tension indicator method, or twist-off-type tension control bolt method)

REQUIRED VERIFICATION AND INSPECTION OF STRUCTURAL STEEL AFTER BOLTING OR WELDING

VERIFICATION AND INSPECTION	CONTINUOUS	PERIODIC	REFERENCED STANDARD
1. Required Special Inspections after bolting or welding			
a. Verify welds are cleaned	-	X	AISC 360-10 Table N5.4-3 and AISC 341-10 Table J6-3
b. Verify size, length and location of welds	X	-	AISC 360-10 Table N5.4-3 and AISC 341-10 Table J6-3
c. Verify welds meet visual acceptance criteria			AISC 360-10 Table N5.4-3 and AISC 341-10 Table J6-3
1) Crack prohibition	X	-	
2) Weld/base metal fusion	X	-	
3) Crater cross section	X	-	
4) Weld profiles	X	-	
5) Undercut	X	-	
6) Porosity	X	-	
d. Inspect arc strikes for cracks	X	-	AISC 360-10 Table N5.4-3
e. Visually inspect the web k-area for cracks within 3" of web doubler plates and stiffeners	X	-	AISC 360-10 Table N5.4-3
f. Verify backing bars removed (if required) and weld tabs removed	X	-	AISC 360-10 Table N5.4-3 and AISC 341-10 Table J6-3
g. Observe repair activities	X	-	AISC 360-10 Table N5.4-3 and AISC 341-10 Table J6-3
h. Document acceptance or rejection of welded joint or member and bolted connections	X	-	AISC 360-10 Table N5.6-3
i. Verify structural steel framing is in compliance with details shown on the Construction Documents, including bracing, stiffeners, member locations, and proper application of joint details at each connection	X	-	AISC 360-10 Chapter N
2. Additional required Special Inspections after bolting or welding in Seismic Design Categories C thru F			
a. Verify placement of reinforcing or contouring fillet welds (if required)	X	-	AISC 341-10 Table J6-3
b. Verify placement of backing fillet welds (if required)	X	-	AISC 341-10 Table J6-3
c. Inspect and document protected zones have no holes and unapproved attachments	X	-	AISC 341-10 Table J8-1

APRIL 21, 2014
BID SET

NOTE:
THESE STRUCTURAL DRAWINGS ARE BASED ON ARCHITECTURAL DRAWINGS DATED APRIL 10, 2014

DIMENSIONS AND ELEVATIONS, AS THEY RELATE TO THE BUILDING IN GENERAL, i.e. GRID TO GRID DIMENSIONS OR DECK BEARING ELEVATIONS, ARE SUPPLIED BY THE ARCHITECT. THEY ARE PROVIDED ON THE STRUCTURAL PLANS AND DETAILS FOR THE CONVENIENCE OF THE CONTRACTOR. VERIFY DIMENSIONS AND ELEVATIONS WITH ARCHITECTURAL DRAWINGS.

DUNN ASSOCIATES, INC
Consulting Structural Engineers
WWW.DUNN-SE.COM
PH: 801-575-8877 FAX: 801-575-8875

CRSA
649 E. South Temple
Salt Lake City, UT 84102
801.355.5915

MWL
11798 N. Lakeridge Pkwy.
Ashland, VA 23005
804-228-7473

State of Utah
Department of Administrative Services
Division of Facilities Construction & Management
4110 State Office Building
Salt Lake City, Utah 84114
Phone: (801) 538 - 3018
Fax: (801) 538 - 3267

DIVISION OF FACILITIES CONSTRUCTION AND MANAGEMENT
REVIEWED FOR CODE COMPLIANCE
SIGNATURE:
DATE: 08-05-2014

PROFESSIONAL STRUCTURAL ENGINEER
No. 295747
TAIT A. KETCHAM
04/21/2014
STATE OF UTAH

ARCHITECT-ENGINEER STAMP

Unified State Laboratory Module 2
4451 South 2700 West,
Taylorsville, UT 84118

DFCM #: 13020300
Project #: 13062

DATE:	ISSUE TYPE:
APRIL 21, 2014	BID SET

CHECKED BY: TAK
DRAWN BY: SJS

GENERAL STRUCTURAL NOTES

S004
VOLUME 1

REQUIRED VERIFICATION AND INSPECTION OF STRUCTURAL STEEL CONSTRUCTION PRIOR TO BOLTING OR WELDING

VERIFICATION AND INSPECTION	CONTINUOUS	PERIODIC	REFERENCED STANDARD
1. Required Special Inspections prior to bolting or welding			
a. Verify welding procedure specifications are available	X	-	AISC 360-10 Table N5.4-1
b. Verify manufacture's certifications for welding consumables is available	X	-	AISC 360-10 Table N5.4-1
c. Verify material type/grade	-	X	AISC 360-10 Table N5.4-1 and AISC 341-10 Table J6-1
d. Verify fabricator or erector has a system by which a welder who welded a joint or member can be identified	-	X	AISC 360-10 Table N5.4-1 and AISC 341-10 Table J6-1
e. Verify the following for the fit-up of groove welds (including joint geometry)			AISC 360-10 Table N5.4-1 and AISC 341-10 Table J6-1
1. Joint preparation	-	X	
2. Dimensions (alignment, root opening, root face, bevel)	-	X	
3. Cleanliness (condition of steel surfaces)	-	X	
4. Tacking (tack weld quality and location)	-	X	
5. Backing type and fit (if applicable)	-	X	
f. Verify the configuration and finish of access holes	-	X	AISC 360-10 Table N5.4-1 and AISC 341-10 Table J6-1
g. Verify the following for the fit-up of fillet welds			AISC 360-10 Table N5.4-1 and AISC 341-10 Table J6-1
1) Dimensions (alignment, gaps at root)	-	X	
2) Cleanliness (condition of steel surfaces)	-	X	
3) Tacking (tack weld quality and location)	-	X	
h. Verify manufacturer's certifications available for fasteners	X	-	AISC 360-10 Table N5.6-1
i. Verify fasteners are marked in accordance with ASTM requirements	-	X	AISC 360-10 Table N5.6-1
j. Verify proper fasteners are selected for the joint detail (grade, type)	-	X	AISC 360-10 Table N5.6-1 and AISC 341-10 Table J7-1
k. Verify proper procedure selected for joint detail	-	X	AISC 360-10 Table N5.6-1 and AISC 341-10 Table J7-1
l. Observe and document pre-installation verification testing by installation personnel for fastening assemblies and methods used.	-	X	AISC 360-10 Table N5.6-1 and AISC 341-10 Table J7-1
m. Verify proper storage is provided for bolts, nuts, washers and other fastener components.	-	X	AISC 360-10 Table N5.6-1 and AISC 341-10 Table J7-1
2. Additional required Special Inspections prior to bolting or welding in Seismic Design Categories C thru F			
a. Verify connecting elements, including the appropriate faying surface condition and hole preparation, if specified, meet the applicable requirements	-	X	AISC 341-10 Table J7-1
b. Observe and document Reduced Beam Section requirements if applicable (Contour, finish and dimensional tolerances)	X	-	AISC 341-10 Table J8-1

TABLE 1.19.2: MASONRY LEVEL B QUALITY ASSURANCE RISK CATEGORY I, II, AND III ENGINEERED MASONRY

MINIMUM TESTS
Verification of Slump flow and Visual Stability Index (VSI) as delivered to the project site in accordance with Specification Article 1.5 B.1.b.3 for self consolidating grout.
Verification of f'_m and f'_{AAC} in accordance with Specification Article 1.4 B prior to construction, except where specifically exempted by this Code

MINIMUM INSPECTION				
INSPECTION TASK	FREQUENCY [a]		REFERENCE FOR CRITERIA	
	CONTINUOUS	PERIODIC	TMS 402 / ACI 530 / ASCE 5	TMS 602 / ACI 530.1 / ASCE 6
1. Verify compliance with the approved submittals		X		Art. 1.5
2. As masonry construction begins, verify that the following are in compliance:				
a. Proportions of site-prepared mortar		X		Art. 2.1 2.6 A
b. Construction of mortar joints		X		Art. 3.3 B
c. Grade and size of prestressing tendons and anchorages		X		Art. 2.4 B, 2.4 H
d. Location of reinforcement, connectors, and prestressing tendons and anchorages		X		Art. 3.4, 3.6 A
e. Prestressing technique		X		Art. 3.6 B
f. Properties of thin-bed mortar for AAC masonry	X [b]	X [c]		Art. 2.1 C
3. Prior to grouting, verify that the following are in compliance:				
a. Grout space		X		Art. 3.2 D, 3.2 F
b. Grade, type, and size of reinforcement and anchor bolts, and prestressing tendons and anchorages		X	Sec. 1.16	Art. 2.4, 3.4
c. Placement of reinforcement, connectors, and prestressing tendons and anchorages		X	Sec. 1.16	Art. 3.2 E, 3.4, 3.6 A
d. Proportions of site-prepared grout and prestressing grout for bonded tendons		X		Art. 2.6 B 2.4 G.1.b
e. Construction of mortar joints		X		Art. 3.3 B
4. Verify during construction:				
a. Size and location of structural elements		X		Art. 3.3 F
b. Type, size, and location of anchors, including other details of anchorage of masonry to structural members, frames, or other construction		X	Sec. 1.16.4.3, 1.17.1	
c. Welding of reinforcement	X		Sec. 2.1.7.7.2, 3.3.3.4 (c), 8.3.3.4(b)	
d. Preparation, construction, and protection of masonry during cold weather (temperature below 40°F (4.4°C)) or hot weather (temperature above 90°F (32.2°C))		X		Art. 1.8 C, 1.8 D
e. Application and measurement of prestressing force	X			Art. 3.6 B
f. Placement of grout and prestressing grout for bonded tendons is in compliance	X			Art. 3.5, 3.6 C
g. Placement of AAC masonry units and construction of thin-bed mortar joints	X [b]	X [c]		Art. 3.3 B.8
5. Observe preparation of grout specimens, mortar specimens, and/or prisms		X		Art. 1.4 B.2.a.3, 1.4 B.2.b.3, 1.4 B.2.c.3, 1.4 B.3, 1.4 B.4

(a) Frequency refers to the frequency of inspection, which may be continuous during the task listed or periodically during the listed task, as defined in the table.
(b) Required for the first 5000 square feet (465 square meters) of AAC masonry.
(c) Required after the first 5000 square feet (465 square meters) of AAC masonry.

APRIL 21, 2014
BID SET

NOTE:
THESE STRUCTURAL DRAWINGS ARE BASED ON ARCHITECTURAL DRAWINGS DATED APRIL 10, 2014

DIMENSIONS AND ELEVATIONS, AS THEY RELATE TO THE BUILDING IN GENERAL, i.e. GRID TO GRID DIMENSIONS OR DECK BEARING ELEVATIONS, ARE SUPPLIED BY THE ARCHITECT. THEY ARE PROVIDED ON THE STRUCTURAL PLANS AND DETAILS FOR THE CONVENIENCE OF THE CONTRACTOR. VERIFY DIMENSIONS AND ELEVATIONS WITH ARCHITECTURAL DRAWINGS.

DUNN ASSOCIATES, INC
Consulting Structural Engineers
WWW.DUNN-SE.COM
PH: 801-575-8877 FAX: 801-575-8875

CRSA
649 E. South Temple
Salt Lake City, UT 84102
801.355.5915

MWL
11798 N. Lakeridge Pkwy.
Ashland, VA 23005
804-228-7473

State of Utah
Department of Administrative Services
Division of Facilities Construction & Management
4110 State Office Building
Salt Lake City, Utah 84114
Phone: (801) 538 - 3018
Fax: (801) 538 - 3267

DIVISION OF FACILITIES CONSTRUCTION AND MANAGEMENT
REVIEWED FOR CODE COMPLIANCE
SIGNATURE:
DATE: 08-05-2014

PROFESSIONAL STRUCTURAL ENGINEER
No. 295747
TAIT A. KETCHAM
04/21/2014
STATE OF UTAH

ARCHITECT-ENGINEER STAMP

Unified State Laboratory Module 2
4451 South 2700 West, Taylorsville, UT 84118

DFCM #:	13020300
Project #:	13062
DATE:	ISSUE TYPE:
APRIL 21, 2014	BID SET
CHECKED BY	TAK
DRAWN BY	SJS

GENERAL STRUCTURAL NOTES

S005

VOLUME 1

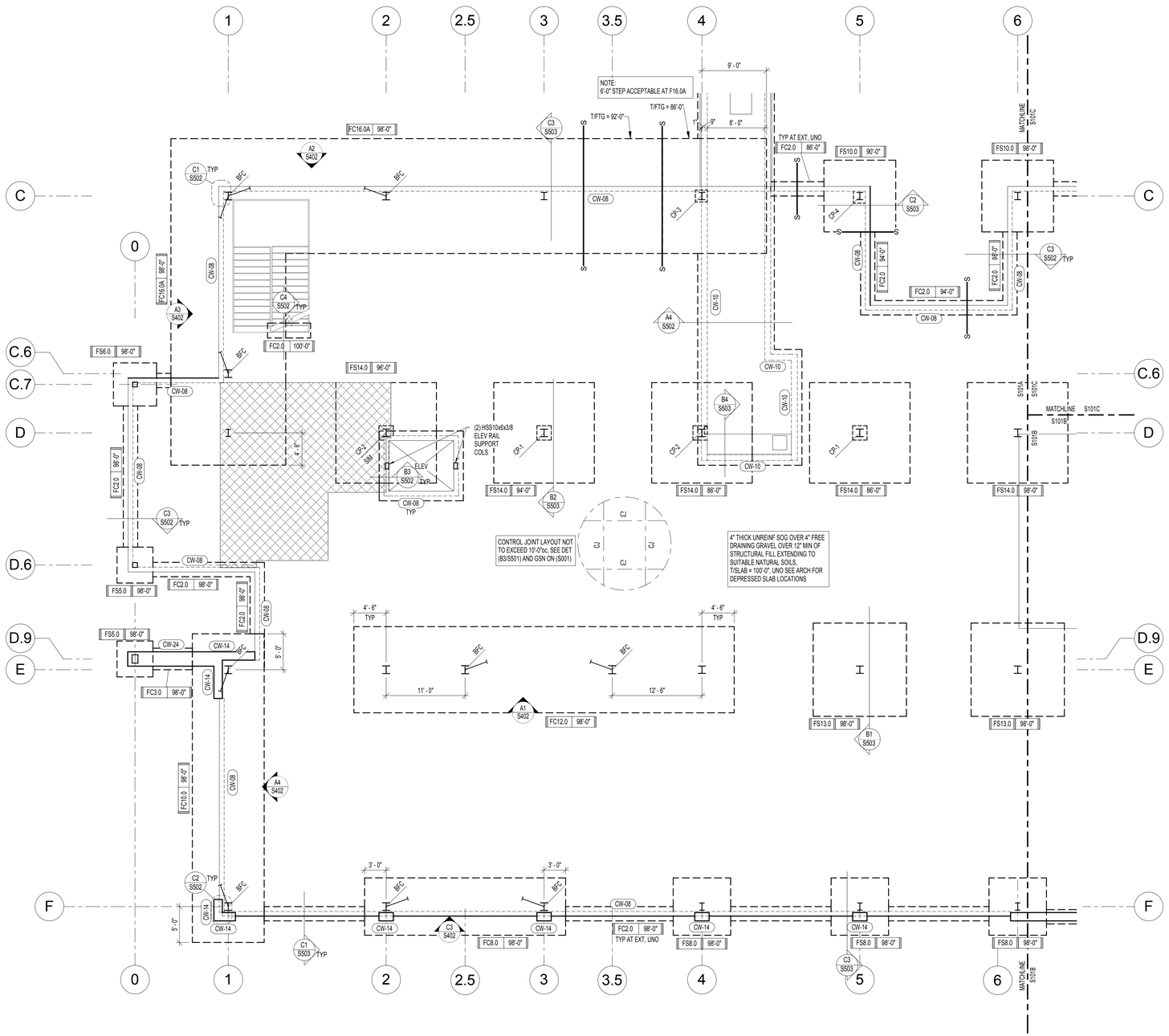

NORTH

A1 S101A FOOTING AND FOUNDATION PLAN - AREA A
SCALE: 1/8" = 1'-0"

KEY PLAN

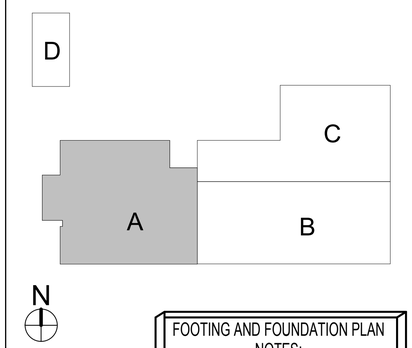

FOOTING AND FOUNDATION PLAN NOTES:

1. COORDINATE LOCATION OF DEPRESSED SLABS, SLOPED SLABS, AND FLOOR DRAINS WITH ARCHITECTURAL AND MECHANICAL DRAWINGS.
2. SEE ARCHITECTURAL DRAWINGS AND CIVIL DRAWINGS FOR EXTERIOR CONCRETE WORK AT DOORS, SIDEWALKS, ETC.
3. CENTER ALL SPOT FOOTINGS UNDER COLUMNS AS SHOWN ON PLAN, TYPICAL UNO.
4. SEE ARCHITECTURAL DRAWINGS FOR DIMENSIONS TO ALL STEEL COLUMNS.
5. SEE FOOTING AND FOUNDATION DETAILS ON SHEET (S501) FOR SURIED PIPES RUNNING PARALLEL AND PERPENDICULAR TO FOOTINGS.
6. SEE FOOTING AND FOUNDATION DETAILS ON SHEET (S501) FOR TYPICAL CONSTRUCTION AND CONTROL JOINTS IN FLOOR SLABS.
7. SEE FOOTING AND FOUNDATION DETAILS ON SHEET (S501) FOR LOCATIONS WHERE CONTROL JOINTS ARE DISCONTINUOUS.
8. SEE FOOTING AND FOUNDATION DETAILS ON SHEET (S501) FOR REINFORCING AROUND MISCELLANEOUS OPENINGS IN CONCRETE WALLS.
9. SEE FOOTING AND FOUNDATION DETAILS ON SHEET (S501) FOR FILL BENEATH FOOTINGS.
10. SEE SHEETS (S401) THRU (S407) FOR FRAME ELEVATIONS AND DETAILS.
11. SEE (B1/S502) FOR HOUSE KEEPING PAD BELOW MECH. EQUIPMENT. SEE MECH FOR SIZE.

MARKS AND SYMBOL LEGEND

	SECTION MARK SHEET NUMBER
	FRAME EL MARK FRAME EL ON (S400's)
FTG EL	FTG DESIGNATION TOF EL. SEE DET ON (S501) FOR REQD FROST DEPTH
	DEPRESSED FND WALL, POUR SLAB OVER, SEE FTG AND FND DETS ON (S502)
S S	FTG STEP, SEE FTG AND FND DETS ON (S501)
	FLR OFFSET, SEE FTG AND FND DETS ON (S501)
	DEPRESSED SLAB, SEE ARCH PLANS FOR EXACT LOCATION AND EL
	CONC WALL, SEE SCHED ON (S301)
or	STL COL, SEE SCHED ON (S304)
CW-X	CONC WALL, SEE SCHED ON (S301)
SC-x	STL COL, SEE SCHED ON (S304)
CP-x	CONC PIER, SEE SCHED ON (S301)
FC-x	CONT FTG, SEE SCHED ON (S301)
FS-x	SPOT FTG, SEE SCHED ON (S301)
FR-x	RECTANGULAR FTG, SEE SCHED ON (S301)
FTS-x	THICKENED SLAB FTG, SEE SCHED ON (S301)
CJ	CONTROL JOINT, SEE FTG AND FND DETS ON (S501)
FD	FLR DRAIN, SEE ARCH FOR EXACT LOCATION
BFC	BRACED FRAME COLUMN, SEE ELEVATIONS
MFC	MOMENT FRAME COLUMN, SEE ELEVATIONS

APRIL 21, 2014
BID SET

NOTE:
THESE STRUCTURAL DRAWINGS ARE BASED ON ARCHITECTURAL DRAWINGS DATED APRIL 10, 2014

DIMENSIONS AND ELEVATIONS, AS THEY RELATE TO THE BUILDING IN GENERAL, i.e. GRID TO GRID DIMENSIONS OR DECK BEARING ELEVATIONS, ARE SUPPLIED BY THE ARCHITECT. THEY ARE PROVIDED ON THE STRUCTURAL PLANS AND DETAILS FOR THE CONVENIENCE OF THE CONTRACTOR. VERIFY DIMENSIONS AND ELEVATIONS WITH ARCHITECTURAL DRAWINGS.

DUNN ASSOCIATES, INC
Consulting Structural Engineers
WWW.DUNN-SE.COM
PH: 801-575-8877 FAX: 801-575-8875

CRSA
649 E. South Temple
Salt Lake City, UT 84102
801.355.5915

MWL
11798 N. Lakeridge Pkwy.
Ashland, VA 23005
804-228-7473

State of Utah
Department of Administrative Services
Division of Facilities Construction & Management
4110 State Office Building
Salt Lake City, Utah 84114
Phone: (801) 538 - 3018
Fax: (801) 538 - 3267

DIVISION OF FACILITIES CONSTRUCTION AND MANAGEMENT
REVIEWED FOR CODE COMPLIANCE
SIGNATURE: Ernie Gelt
DATE: 08-05-2014

PROFESSIONAL STRUCTURAL ENGINEER
No. 295747
TAIT A. KETCHAM
04/21/2014
STATE OF UTAH

ARCHITECT-ENGINEER STAMP

Unified State Laboratory Module 2

4451 South 2700 West, Taylorsville, UT 84118

DFCM #:	13020300
Project #:	13062

DATE:	ISSUE TYPE:
APRIL 21, 2014	BID SET
CHECKED BY	TAK
DRAWN BY	SJS

FOOTING AND FOUNDATION PLAN - AREA A

S101A

VOLUME 1

FOOTING AND FOUNDATION PLAN NOTES:

1. COORDINATE LOCATION OF DEPRESSED SLABS, SLOPED SLABS, AND FLOOR DRAINS WITH ARCHITECTURAL AND MECHANICAL DRAWINGS.
2. SEE ARCHITECTURAL DRAWINGS AND CIVIL DRAWINGS FOR EXTERIOR CONCRETE WORK AT DOORS, SIDEWALKS, ETC.
3. CENTER ALL SPOT FOOTINGS UNDER COLUMNS AS SHOWN ON PLAN. TYPICAL UNO.
4. SEE ARCHITECTURAL DRAWINGS FOR DIMENSIONS TO ALL STEEL COLUMNS.
5. SEE FOOTING AND FOUNDATION DETAILS ON SHEET (S501) FOR BURIED PIPES RUNNING PARALLEL AND PERPENDICULAR TO FOOTINGS.
6. SEE FOOTING AND FOUNDATION DETAILS ON SHEET (S501) FOR TYPICAL CONSTRUCTION AND CONTROL JOINTS IN FLOOR SLABS.
7. SEE FOOTING AND FOUNDATION DETAILS ON SHEET (S501) FOR LOCATIONS WHERE CONTROL JOINTS ARE DISCONTINUOUS.
8. SEE FOOTING AND FOUNDATION DETAILS ON SHEET (S501) FOR REINFORCING AROUND MISCELLANEOUS OPENINGS IN CONCRETE WALLS.
9. SEE FOOTING AND FOUNDATION DETAILS ON SHEET (S501) FOR FILL BENEATH FOOTINGS.
10. SEE SHEETS (S401) AND (S402) FOR FRAME ELEVATIONS AND DETAILS.

MARKS AND SYMBOL LEGEND

SECTION MARK / SHEET NUMBER	CONC WALL, SEE SCHED ON (S301)	FD	FLR DRAIN, SEE ARCH FOR EXACT LOCATION
FRAME EL MARK FRAME / EL ON (S400's)	STL COL, SEE SCHED ON (S304)	BFC	BRACED FRAME COLUMN, SEE ELEVATIONS
FTG / EL — FTG DESIGNATION / TOF EL, SEE DET ON (S501) FOR REQD FROST DEPTH	CW-X — CONC WALL, SEE SCHED ON (S301)	MFC	MOMENT FRAME COLUMN, SEE ELEVATIONS
DEPRESSED FND WALL, POUR SLAB OVER, SEE FTG AND FND DETS ON (S502)	SC-x — STL COL, SEE SCHED ON (S304)		
S — S — FTG STEP, SEE FTG AND FND DETS ON (S501)	CP-x — CONC PIER, SEE SCHED ON (S301)		
FLR OFFSET, SEE FTG AND FND DETS ON (S501)	FC-x — CONT FTG, SEE SCHED ON (S301)		
DEPRESSED SLAB, SEE ARCH PLANS FOR EXACT LOCATION AND EL	FS-x — SPOT FTG, SEE SCHED ON (S301)		
	FR-x — RECTANGULAR FTG, SEE SCHED ON (S301)		
	FTS-x — THICKENED SLAB FTG, SEE SCHED ON (S301)		
	CJ — CONTROL JOINT, SEE FTG AND FND DETS ON (S501)		

KEY PLAN

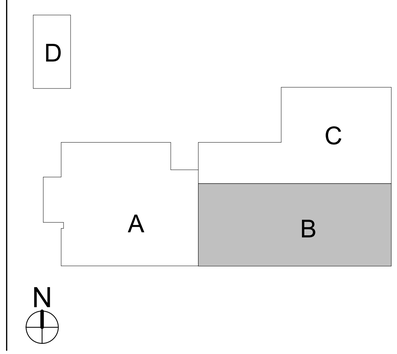

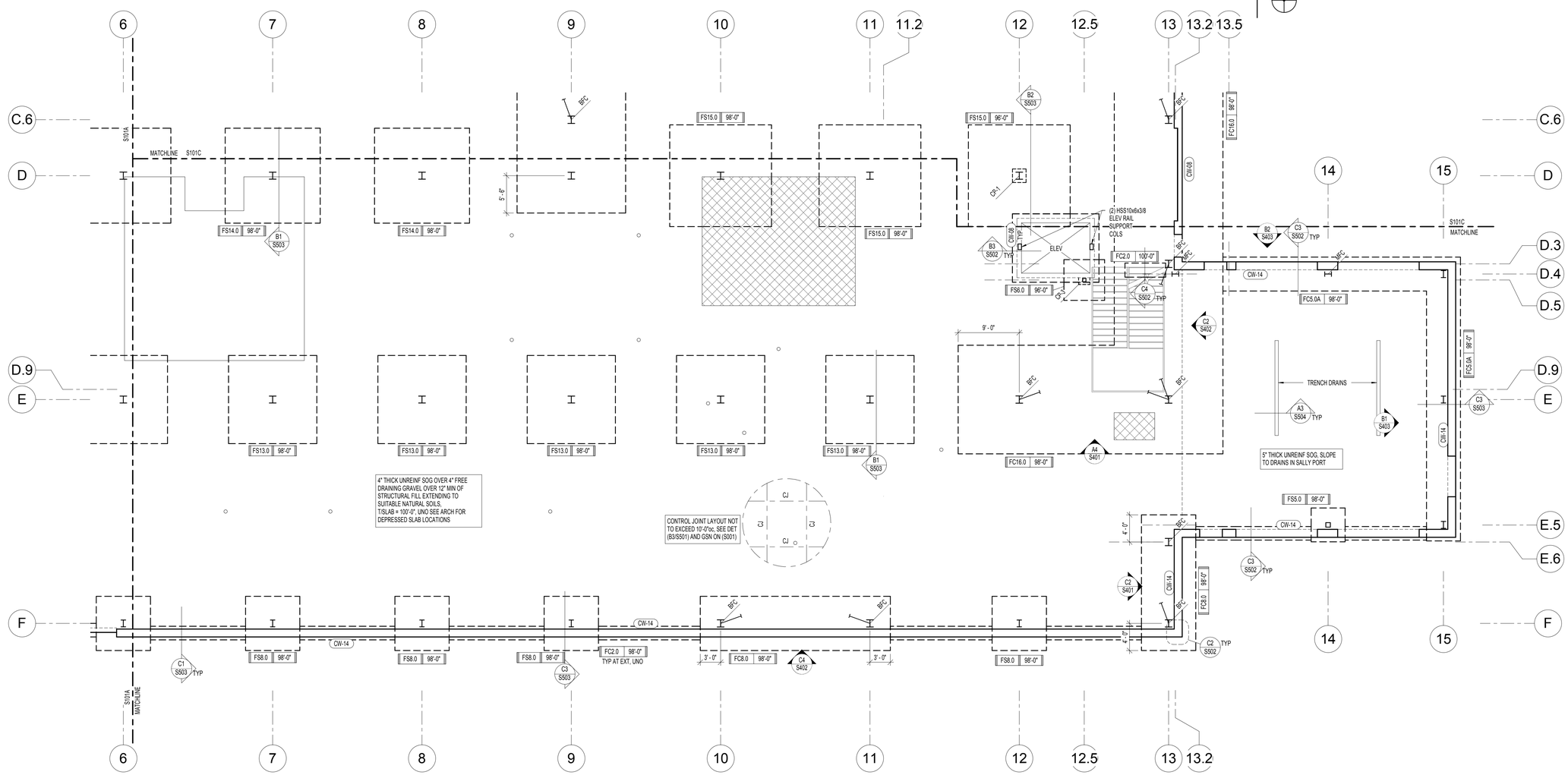

NORTH

A1 / S101B — FOOTING AND FOUNDATION PLAN - AREA B
SCALE: 1/8" = 1'-0"

APRIL 21, 2014
BID SET

NOTE:
THESE STRUCTURAL DRAWINGS ARE BASED ON ARCHITECTURAL DRAWINGS DATED APRIL 10, 2014

DIMENSIONS AND ELEVATIONS, AS THEY RELATE TO THE BUILDING IN GENERAL, i.e. GRID TO GRID DIMENSIONS OR DECK BEARING ELEVATIONS, ARE SUPPLIED BY THE ARCHITECT. THEY ARE PROVIDED ON THE STRUCTURAL PLANS AND DETAILS FOR THE CONVENIENCE OF THE CONTRACTOR. VERIFY DIMENSIONS AND ELEVATIONS WITH ARCHITECTURAL DRAWINGS.

DUNN ASSOCIATES, INC
Consulting Structural Engineers
WWW.DUNN-SE.COM
PH: 801-575-8877 FAX: 801-575-8875

CRSA
649 E. South Temple
Salt Lake City, UT 84102
801.355.5915

MWL
11798 N. Lakeridge Pkwy.
Ashland, VA 23005
804-228-7473

State of Utah
Department of Administrative Services
Division of Facilities Construction & Management
4110 State Office Building
Salt Lake City, Utah 84114
Phone: (801) 538 - 3018
Fax: (801) 538 - 3267

DIVISION OF FACILITIES CONSTRUCTION AND MANAGEMENT
REVIEWED FOR CODE COMPLIANCE
SIGNATURE: Ernie Gelle
DATE: 08-05-2014

PROFESSIONAL STRUCTURAL ENGINEER
No. 295747
TAIT A. KETCHAM
04/21/2014
STATE OF UTAH

ARCHITECT-ENGINEER STAMP

Unified State Laboratory Module 2

4451 South 2700 West, Taylorsville, UT 84118

DFCM #: 13020300
Project #: 13062

DATE:	ISSUE TYPE:
APRIL 21, 2014	BID SET

CHECKED BY: TAK
DRAWN BY: SJS

FOOTING AND FOUNDATION PLAN - AREA B

S101B

VOLUME 1

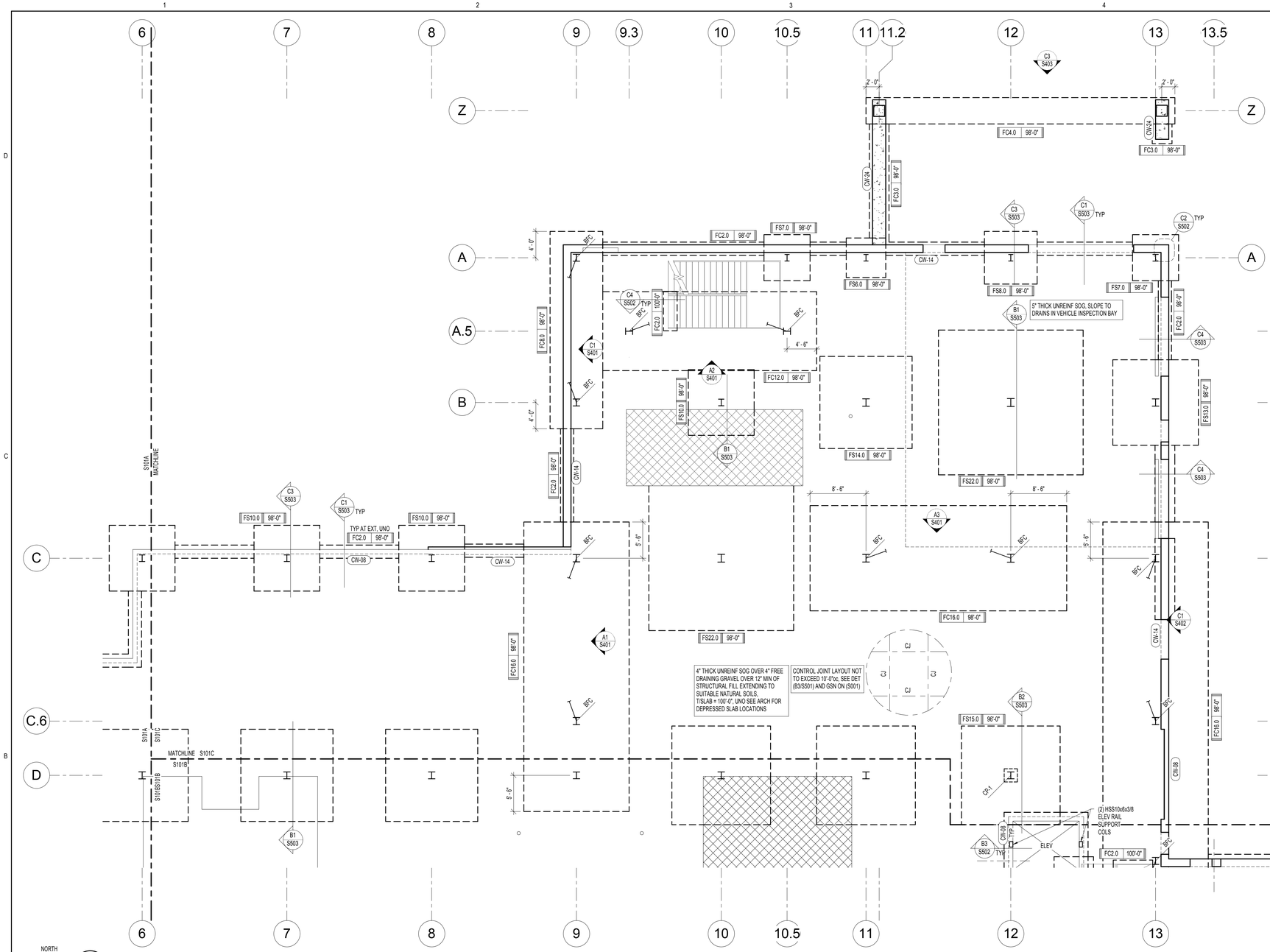

A1 S101C FOOTING AND FOUNDATION PLAN - AREA C
SCALE: 1/8" = 1'-0"

FOOTING AND FOUNDATION PLAN NOTES:

1. COORDINATE LOCATION OF DEPRESSED SLABS, SLOPED SLABS, AND FLOOR DRAINS WITH ARCHITECTURAL AND MECHANICAL DRAWINGS.
2. SEE ARCHITECTURAL DRAWINGS AND CIVIL DRAWINGS FOR EXTERIOR CONCRETE WORK AT DOORS, SIDEWALKS, ETC.
3. CENTER ALL SPOT FOOTINGS UNDER COLUMNS AS SHOWN ON PLAN, TYPICAL UNO.
4. SEE ARCHITECTURAL DRAWINGS FOR DIMENSIONS TO ALL STEEL COLUMNS.
5. SEE FOOTING AND FOUNDATION DETAILS ON SHEET (S501) FOR BURIED PIPES RUNNING PARALLEL AND PERPENDICULAR TO FOOTINGS.
6. SEE FOOTING AND FOUNDATION DETAILS ON SHEET (S501) FOR TYPICAL CONSTRUCTION AND CONTROL JOINTS IN FLOOR SLABS.
7. SEE FOOTING AND FOUNDATION DETAILS ON SHEET (S501) FOR LOCATIONS WHERE CONTROL JOINTS ARE DISCONTINUOUS.
8. SEE FOOTING AND FOUNDATION DETAILS ON SHEET (S501) FOR REINFORCING AROUND MISCELLANEOUS OPENINGS IN CONCRETE WALLS.
9. SEE FOOTING AND FOUNDATION DETAILS ON SHEET (S501) FOR FILL BENEATH FOOTINGS.
10. SEE SHEETS (S401) AND (S402) FOR FRAME ELEVATIONS AND DETAILS.

MARKS AND SYMBOL LEGEND

	SECTION MARK / SHEET NUMBER		FLR OFFSET, SEE FTG AND FND DETS ON (S501)	FC-x	CONT FTG, SEE SCHED ON (S301)
	FRAME EL MARK FRAME EL ON (S400's)		DEPRESSED SLAB, SEE ARCH PLANS FOR EXACT LOCATION AND EL	FS-x	SPOT FTG, SEE SCHED ON (S301)
				FR-x	RECTANGULAR FTG, SEE SCHED ON (S301)
FTG / EL	FTG DESIGNATION / TOF EL, SEE DET ON (S501) FOR REQD FROST DEPTH		CONC WALL, SEE SCHED ON (S301)	FTS-x	THICKENED SLAB FTG, SEE SCHED ON (S301)
			STL COL, SEE SCHED ON (S304)	CJ	CONTROL JOINT, SEE FTG AND FND DETS ON (S501)
	DEPRESSED FND WALL, POUR SLAB OVER, SEE FTG AND FND DETS ON (S502)	CW-X	CONC WALL, SEE SCHED ON (S301)	FD	FLR DRAIN, SEE ARCH FOR EXACT LOCATION
		SC-x	STL COL, SEE SCHED ON (S304)	BFC	BRACED FRAME COLUMN, SEE ELEVATIONS
S S	FTG STEP, SEE FTG AND FND DETS ON (S501)	CP-x	CONC PIER, SEE SCHED ON (S301)	MFC	MOMENT FRAME COLUMN, SEE ELEVATIONS

APRIL 21, 2014
BID SET

NOTE:
THESE STRUCTURAL DRAWINGS ARE BASED ON ARCHITECTURAL DRAWINGS DATED APRIL 10, 2014

DIMENSIONS AND ELEVATIONS, AS THEY RELATE TO THE BUILDING IN GENERAL, i.e. GRID TO GRID DIMENSIONS OR DECK BEARING ELEVATIONS, ARE SUPPLIED BY THE ARCHITECT. THEY ARE PROVIDED ON THE STRUCTURAL PLANS AND DETAILS FOR THE CONVENIENCE OF THE CONTRACTOR. VERIFY DIMENSIONS AND ELEVATIONS WITH ARCHITECTURAL DRAWINGS.

DUNN ASSOCIATES, INC
Consulting Structural Engineers
WWW.DUNN-SE.COM
PH: 801-575-8877 FAX: 801-575-8875

KEY PLAN

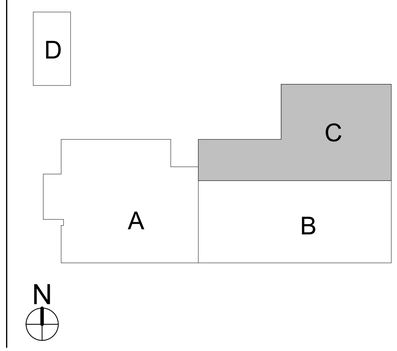

CRSA
649 E. South Temple
Salt Lake City, UT 84102
801.355.5915

MWL
11798 N. Lakeridge Pkwy.
Ashland, VA 23005
804-228-7473

State of Utah
Department of Administrative Services
Division of Facilities Construction & Management
4110 State Office Building
Salt Lake City, Utah 84114
Phone: (801) 538 - 3018
Fax: (801) 538 - 3267

DIVISION OF FACILITIES CONSTRUCTION AND MANAGEMENT
REVIEWED FOR CODE COMPLIANCE
SIGNATURE:
DATE: 08-05-2014

PROFESSIONAL STRUCTURAL ENGINEER
No. 295747
TAIT A. KETCHAM
04/21/2014
STATE OF UTAH

ARCHITECT-ENGINEER STAMP

Unified State Laboratory Module 2

4451 South 2700 West, Taylorsville, UT 84118

DFCM #:	13020300
Project #:	13062
DATE:	ISSUE TYPE:
APRIL 21, 2014	BID SET
CHECKED BY	TAK
DRAWN BY	SJS

FOOTING AND FOUNDATION PLAN - AREA C

S101C

VOLUME 1

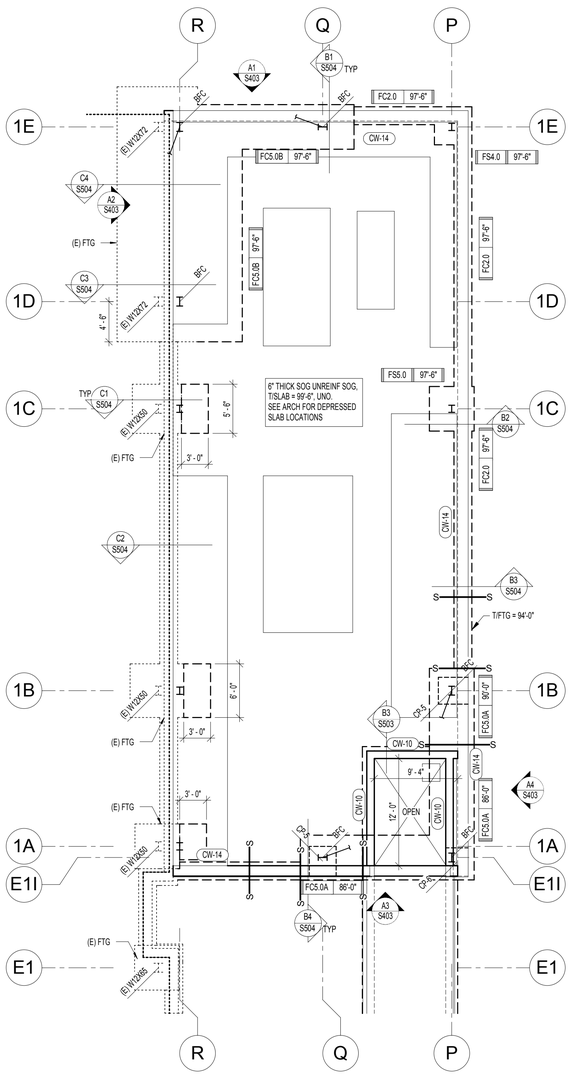

A1 S101D FOOTING AND FOUNDATION PLAN - AREA D
SCALE: 1/8" = 1'-0"

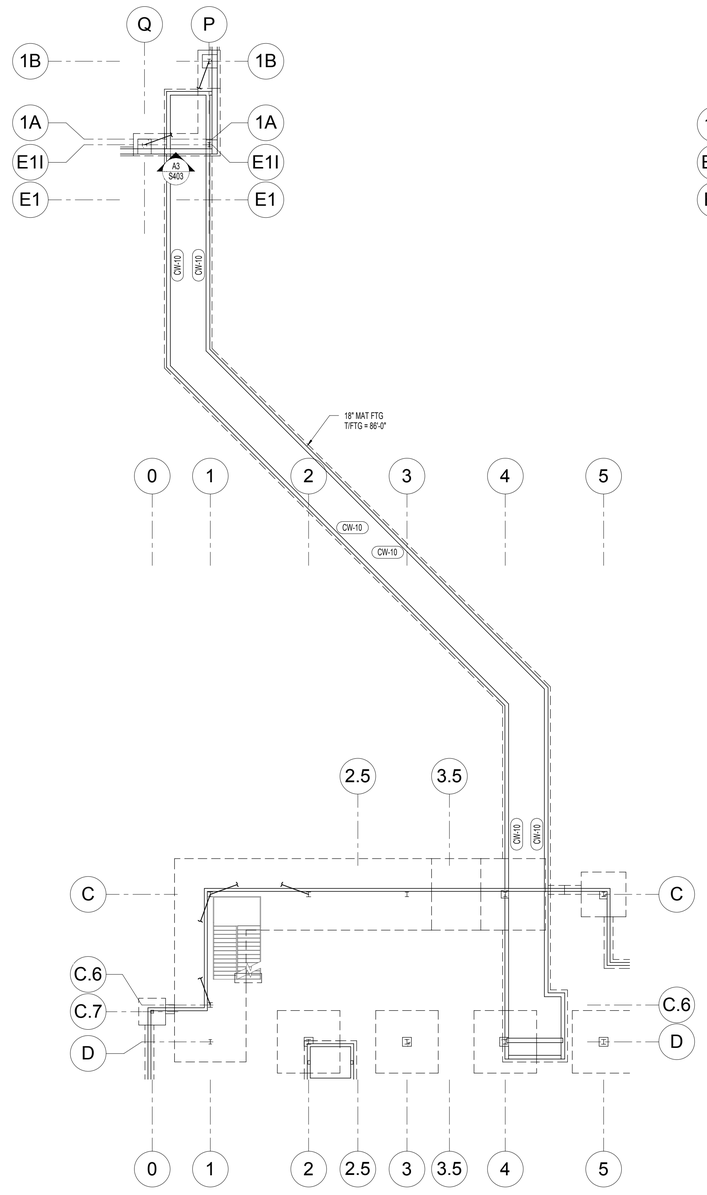

A2 S101D TUNNEL FOOTING AND FOUNDATION PLAN
SCALE: 1/16" = 1'-0"

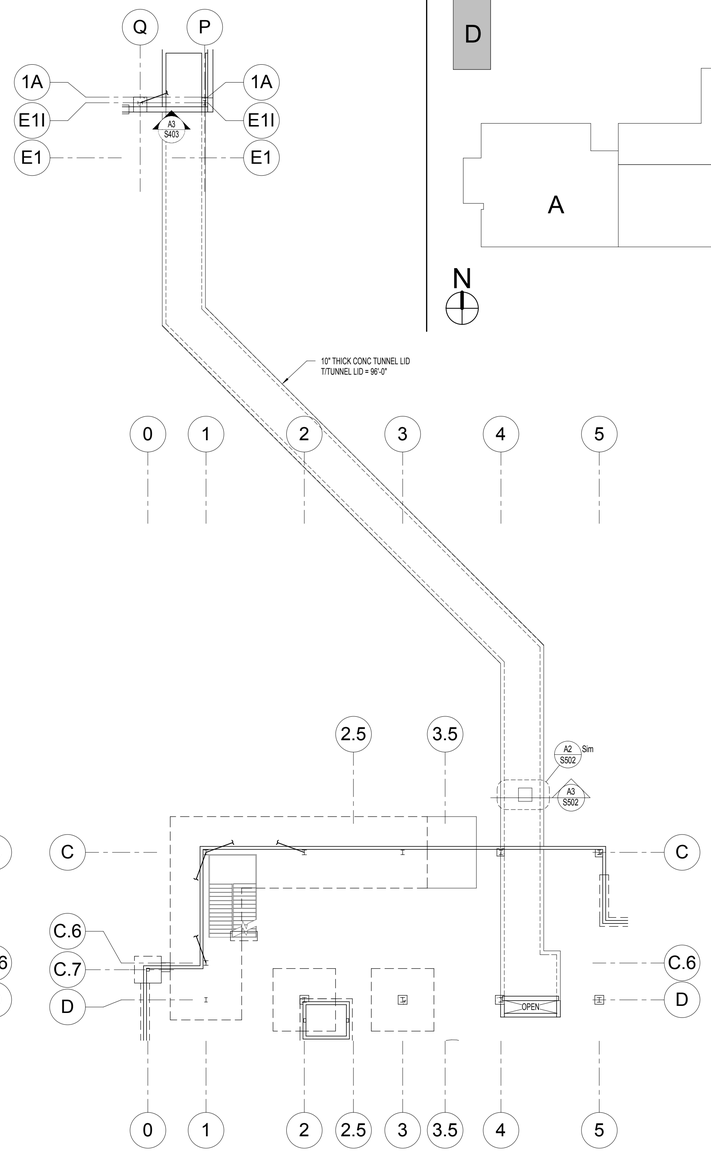

A4 S101D TUNNEL LID FRAMING PLAN
SCALE: 1/16" = 1'-0"

KEY PLAN

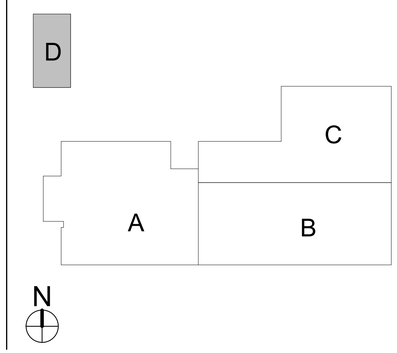

FOOTING AND FOUNDATION PLAN NOTES:

1. COORDINATE LOCATION OF DEPRESSED SLABS, SLOPED SLABS, AND FLOOR DRAINS WITH ARCHITECTURAL AND MECHANICAL DRAWINGS.
2. SEE ARCHITECTURAL DRAWINGS AND CIVIL DRAWINGS FOR EXTERIOR CONCRETE WORK AT DOORS, SIDEWALKS, ETC.
3. CENTER ALL SPOT FOOTINGS UNDER COLUMNS AS SHOWN ON PLAN, TYPICAL UNO.
4. SEE ARCHITECTURAL DRAWINGS FOR DIMENSIONS TO ALL STEEL COLUMNS.
5. SEE FOOTING AND FOUNDATION DETAILS ON SHEET (S501) FOR BURIED PIPES RUNNING PARALLEL AND PERPENDICULAR TO FOOTINGS.
6. SEE FOOTING AND FOUNDATION DETAILS ON SHEET (S501) FOR TYPICAL CONSTRUCTION AND CONTROL JOINTS IN FLOOR SLABS.
7. SEE FOOTING AND FOUNDATION DETAILS ON SHEET (S501) FOR LOCATIONS WHERE CONTROL JOINTS ARE DISCONTINUOUS.
8. SEE FOOTING AND FOUNDATION DETAILS ON SHEET (S501) FOR REINFORCING AROUND MISCELLANEOUS OPENINGS IN CONCRETE WALLS.
9. SEE FOOTING AND FOUNDATION DETAILS ON SHEET (S501) FOR FILL BENEATH FOOTINGS.
10. SEE SHEETS (S401) AND (S402) FOR FRAME ELEVATIONS AND DETAILS.

MARKS AND SYMBOL LEGEND

	SECTION MARK / SHEET NUMBER		FLR OFFSET, SEE FTG AND FND DETS ON (S501)	FC-x	CONT FTG, SEE SCHED ON (S301)
	FRAME EL MARK FRAME EL ON (S400's)		DEPRESSED SLAB, SEE ARCH PLANS FOR EXACT LOCATION AND EL	FS-x	SPOT FTG, SEE SCHED ON (S301)
				FR-x	RECTANGULAR FTG, SEE SCHED ON (S301)
FTG / EL	FTG DESIGNATION / TOF EL, SEE DET ON (S501) FOR REQD FROST DEPTH		CONC WALL, SEE SCHED ON (S301)	FTS-x	THICKENED SLAB FTG, SEE SCHED ON (S301)
		or	STL COL, SEE SCHED ON (S304)	CJ	CONTROL JOINT, SEE FTG AND FND DETS ON (S501)
		CW-X	CONC WALL, SEE SCHED ON (S301)	FD	FLR DRAIN, SEE ARCH FOR EXACT LOCATION
	DEPRESSED FND WALL, POUR SLAB OVER, SEE FTG AND FND DETS ON (S502)	SC-x	STL COL, SEE SCHED ON (S304)	BFC	BRACED FRAME COLUMN, SEE ELEVATIONS
S — S	FTG STEP, SEE FTG AND FND DETS ON (S501)	CP-x	CONC PIER, SEE SCHED ON (S301)	MFC	MOMENT FRAME COLUMN, SEE ELEVATIONS

APRIL 21, 2014
BID SET

NOTE:
THESE STRUCTURAL DRAWINGS ARE BASED ON ARCHITECTURAL DRAWINGS DATED APRIL 10, 2014

DIMENSIONS AND ELEVATIONS, AS THEY RELATE TO THE BUILDING IN GENERAL, i.e. GRID TO GRID DIMENSIONS OR DECK BEARING ELEVATIONS, ARE SUPPLIED BY THE ARCHITECT. THEY ARE PROVIDED ON THE STRUCTURAL PLANS AND DETAILS FOR THE CONVENIENCE OF THE CONTRACTOR. VERIFY DIMENSIONS AND ELEVATIONS WITH ARCHITECTURAL DRAWINGS.

DUNN ASSOCIATES, INC
Consulting Structural Engineers
WWW.DUNN-SE.COM
PH: 801-575-8877 FAX: 801-575-8875

CRSA
649 E. South Temple
Salt Lake City, UT 84102
801.355.5915

MWL
11798 N. Lakeridge Pkwy.
Ashland, VA 23005
804-228-7473

State of Utah
Department of Administrative Services
Division of Facilities Construction & Management
4110 State Office Building
Salt Lake City, Utah 84114
Phone: (801) 538 - 3018
Fax: (801) 538 - 3267

DIVISION OF FACILITIES CONSTRUCTION AND MANAGEMENT
REVIEWED FOR CODE COMPLIANCE
SIGNATURE: Ernie Calfee
DATE: 08-05-2014

PROFESSIONAL STRUCTURAL ENGINEER
No. 295747
TAIT K. KETCHAM
04/21/2014
STATE OF UTAH

ARCHITECT-ENGINEER STAMP

Unified State Laboratory Module 2

4451 South 2700 West, Taylorsville, UT 84118

DFCM #:	13020300
Project #:	13062
DATE:	ISSUE TYPE:
APRIL 21, 2014	BID SET
CHECKED BY	TAK
DRAWN BY	SJS

FOOTING AND FOUNDATION PLANS - AREA D AND TUNNEL PLANS

S101D

VOLUME 1

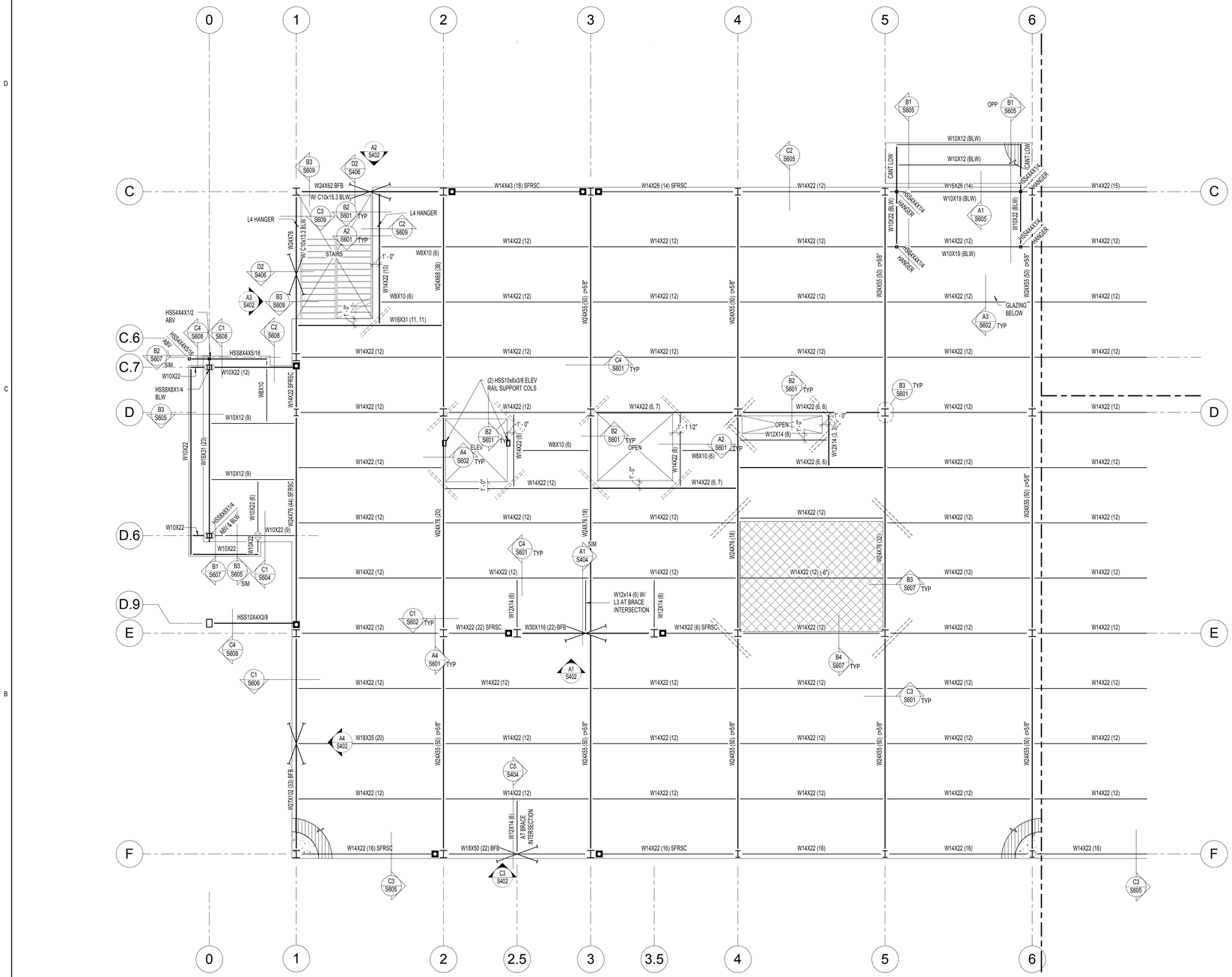

NORTH

A1 / S102A LEVEL 2 FLOOR FRAMING - AREA A

SCALE: 1/8" = 1'-0"

KEY PLAN

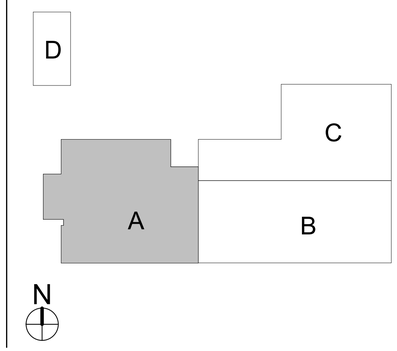

FLOOR FRAMING PLAN NOTES:

1. VERIFY WALL FLOOR OPENINGS FOR MECHANICAL SHAFTS, STAIRS, ETC. WITH ARCHITECTURAL DRAWINGS.
2. SEE FLOOR FRAMING DETAILS ON SHEET (S601) FOR FRAMING AROUND MISCELLANEOUS OPENINGS.
3. SEE SHEETS (S401) THRU (S407) FOR FRAME ELEVATIONS AND DETAILS.
4. SEE ARCHITECTURAL DRAWINGS FOR ALL DIMENSIONS TO STEEL COLUMNS AND SLAB EDGES.
5. SEE FOOTING AND FOUNDATION DETAILS ON SHEET (S501) FOR REINFORCING AROUND MISCELLANEOUS OPENINGS IN CONCRETE WALLS.

MARKS & SYMBOLS LEGEND

	SECTION MARK SHEET NUMBER	?t' x 'w'	INDICATES A HEIGHT (IN) x WIDTH (IN) BM PENETRATION CTR IN THE BM DEPTH, SEE DET (A2/S602), PROVIDE A MAT REINF IN THE SLAB OF #4 AT 12"oc EW, SEE DET (A2/S602) FOR EXTENT OF REINF OVER PENETRATION. PROVIDE ADDITIONAL HSA's BTWN PENETRATION EDGE AND MID-SPAN BM TO ATTAIN HSA's 6"oc MAX
	FRAME EL MARK FRAME EL ON (S400's)		
	CONC OVER MTL DECK, SEE GSN ON (S002)	CC-x	CONC COL, SEE SCHED ON (S301)
	ADDITIONAL CONC REINF OF (2) #6 BARS x 6'-0", CTR ON CORNERS, NO SPLICES	W_x_	COMPOSITE STL BMS, SEE GSN ON (S002)
	DEPRESSED SLAB, SEE ARCH PLANS FOR EXACT LOCATION AND EL	(x)	NUMBER OF HSA FOR SECTION OF COMPOSITE STL BM, SEE GSN ON (S002)
	CONC WALL, SEE SCHED ON (S301)	(c=_")	REQD PRE-CAMBER AT MID-SPAN OF BMS, CAMBER TOLERANCE SHALL BE +1/4", -0"
or	STL COL, SEE SCHED ON (S304)	T=C=xK	ROOF JST TOP CHORD SHALL BE DESIGNED FOR AN ADDITIONAL LOAD OF __KIPS IN TENSION AND COMPRESSION. LOADS ARE PROVIDED AT ULTIMATE STRENGTH LEVEL
	CONC COL, SEE SCHED ON (S301)	(SFRSC)	SEISMIC FORCE RESISTING SYSTEM COLLECTOR. SEE DETS ON SHEET (S405) FOR CONNECTIONS
	LATERAL FRAME MOMENT CONNECTIONS	L3	L3x3 1/4 BRACE, SEE (S400) SHEETS FOR ADDITIONAL INFORMATION
	GRAVITY MOMENT CONNECTIONS	L4	L4x4x3/8 FRAME BRACING, SEE DETAILS ON (S404) AND (S406)
	DBL SHEAR CONNECTION, SEE SCHED ON (S303)	L5	L5x5x3/8 FRAME BRACING, SEE DETAILS ON SHEETS (S404) AND (S406)
SC-x	STL COL, SEE SCHED ON (S304)		SFRSC CONNECTION, SEE (S400) SHEETS FOR DETAILS
CB-x	CONC BM, SEE SCHED ON (S301)		
RD	ROOF DRAIN, SEE ARCH AND MECH FOR EXACT LOCATION. SEE DET (B3/S701) FOR FRAMING		

APRIL 21, 2014
BID SET

NOTE:
THESE STRUCTURAL DRAWINGS ARE BASED ON ARCHITECTURAL DRAWINGS DATED APRIL 10, 2014

DIMENSIONS AND ELEVATIONS, AS THEY RELATE TO THE BUILDING IN GENERAL, i.e. GRID TO GRID DIMENSIONS OR DECK BEARING ELEVATIONS, ARE SUPPLIED BY THE ARCHITECT. THEY ARE PROVIDED ON THE STRUCTURAL PLANS AND DETAILS FOR THE CONVENIENCE OF THE CONTRACTOR. VERIFY DIMENSIONS AND ELEVATIONS WITH ARCHITECTURAL DRAWINGS.

DUNN ASSOCIATES, INC
Consulting Structural Engineers
WWW.DUNN-SE.COM
PH: 801-575-8877 FAX: 801-575-8875

CRSA
649 E. South Temple
Salt Lake City, UT 84102
801.355.5915

MWL
11798 N. Lakeridge Pkwy.
Ashland, VA 23005
804-228-7473

State of Utah
Department of Administrative Services
Division of Facilities Construction & Management
4110 State Office Building
Salt Lake City, Utah 84114
Phone: (801) 538 - 3018
Fax: (801) 538 - 3267

DIVISION OF FACILITIES CONSTRUCTION AND MANAGEMENT
REVIEWED FOR CODE COMPLIANCE
SIGNATURE: Ernie Calle
DATE: 08-05-2014

PROFESSIONAL STRUCTURAL ENGINEER
No. 295747
TAIT A. KETCHAM
04/21/2014
STATE OF UTAH

ARCHITECT-ENGINEER STAMP

Unified State Laboratory Module 2

4451 South 2700 West, Taylorsville, UT 84118

DFCM #:	13020300
Project #:	13062
DATE:	ISSUE TYPE:
APRIL 21, 2014	BID SET
CHECKED BY	TAK
DRAWN BY	SJS

LEVEL 2 FLOOR FRAMING PLAN - AREA A

S102A

VOLUME 1

ROOF FRAMING PLAN NOTES:

1. VERIFY ROOF SLOPES, DRAINS, AND DECK BEARING ELEVATIONS WITH ARCHITECTURAL DRAWINGS. SEE ROOF FRAMING DETAILS ON SHEET (S701).
2. ALL ROOF OPENINGS SHALL BE FRAMED AS INDICATED IN ROOF FRAMING DETAILS ON SHEET (S701).
3. SEE ROOF FRAMING DETAILS ON SHEET (S701) FOR CONCENTRATED LOADS LOCATED FURTHER THAN 6" FROM JOIST/GIRDER PANEL JOINT.
4. SEE ROOF FRAMING DETAILS ON SHEET (S701) FOR MECHANICAL UNITS HUNG BELOW JOISTS.
5. VERIFY SIZE, WEIGHT, AND LOCATION OF ALL ROOF TOP MECHANICAL UNITS WITH ARCHITECTURAL AND MECHANICAL DRAWINGS. SEE ROOF FRAMING DETAILS ON SHEET (S701) FOR STEEL FRAMES AT ALL ROOF TOP EQUIPMENT. COORDINATE OPENINGS WITH MECHANICAL, ELECTRICAL, AND GENERAL CONTRACTORS.
6. OPEN WEB STEEL JOISTS AND JOIST GIRDERS SHALL BE DESIGNATED BY THE MANUFACTURER TO SUPPORT THE MECHANICAL AND LATERAL LOADS SHOWN ON THE ROOF FRAMING PLANS IN ADDITION TO THE UNIFORM AND POINT LOADS SHOWN.
7. WHERE SKYLIGHTS OR MECHANICAL UNITS INTERRUPT HORIZONTAL BRIDGING, PROVIDE CROSS BRIDGING AT JOIST SPACES ON EA SIDE. TYPICAL.
8. WHERE DIAGONAL BRIDGING CONFLICTS WITH MECHANICAL DUCTS, REMOVE DIAGONAL BRIDGING AND REPLACE WITH HORIZONTAL BRIDGING (AFTER ROOF DECK IS IN PLACE).
9. * - INDICATES THAT THESE JOISTS SHALL BE DESIGNED FOR AN ADLOAD OF 1000# AT ANY TOP CHORD PANEL POINT. THIS LOAD IS TO BE ADDED TO THE GIRDER TOP CHORD LOAD. MULTIPLE *** ARE ADDITIVE.
10. JOIST DESIGNER SHALL DESIGN JOISTS AND SUPPLY ADDITIONAL BRIDGING AS REQUIRED FOR 8 PSF NET UPLIFT DUE TO WIND. THERE IS NO UPLIFT ON GIRDERS.
11. SEE SHEETS (S401) THRU (S407) FOR MOMENT FRAME ELEVATIONS AND DETAILS.
12. SEE ARCHITECTURAL PLANS FOR ALL STEEL COLUMN LOCATIONS (DIMENSIONS).
13. SPRINKLER DESIGNER SHALL COORDINATE THE SPRINKLER DESIGN WITH THE JOIST/GIRDER SHOP DRAWINGS.

SNOW DRIFT LOADING DIAGRAM

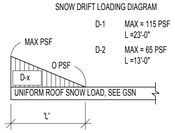

FLOOR FRAMING PLAN NOTES:

1. VERIFY WALL FLOOR OPENINGS FOR MECHANICAL SHAFTS, STAIRS, ETC. WITH ARCHITECTURAL DRAWINGS.
2. SEE FLOOR FRAMING DETAILS ON SHEET (S601) FOR FRAMING AROUND MISCELLANEOUS OPENINGS.
3. SEE SHEETS (S401) AND (S402) FOR FRAME ELEVATIONS AND DETAILS.
4. SEE ARCHITECTURAL DRAWINGS FOR ALL DIMENSIONS TO STEEL COLUMNS AND SLAB EDGES.
5. SEE FOOTING AND FOUNDATION DETAILS ON SHEET (S501) FOR REINFORCING AROUND MISCELLANEOUS OPENINGS IN CONCRETE WALLS.

MARKS & SYMBOLS LEGEND

	SECTION MARK SHEET NUMBER		CONC COL, SEE SCHED ON (S301)	CC-x	CONC COL, SEE SCHED ON (S301)		MTL ROOF DECK, SEE GSN ON (S101)
	FRAME EL MARK FRAME EL ON (S400's)		LATERAL FRAME MOMENT CONNECTIONS	CL-x	CONC LINTEL, SEE SCHED ON (S301)		BRG WALL BLW
	CONC OVER MTL DECK, SEE GSN ON (S002)		GRAVITY MOMENT CONNECTIONS	W_x_	COMPOSITE STL BMS, SEE GSN ON (S002)		JST TOP CHORD TIE, SEE ROOF FRAMING DETS ON (S701)
	ADDITIONAL CONC REINF OF (2) #6 BARS x 6'-0", CTR ON CORNERS, NO SPLICES		DBL SHEAR CONNECTION, SEE SCHED ON (S303)	(x)	NUMBER OF HSA FOR SECTION OF COMPOSITE STL BM, SEE GSN ON (S002)		HORIZ BRIDG
	DEPRESSED SLAB, SEE ARCH PLANS FOR EXACT LOCATION AND EL	'h' x 'w'	INDICATES A HEIGHT (IN) x WIDTH (IN) BM PENETRATION CTR IN THE BM DEPTH, SEE DET (A2/S802), PROVIDE A MAT REINF IN THE SLAB OF #4 AT 12"oc EW, SEE DET (A2/S602) FOR EXTENT OF REINF OVER PENETRATION. PROVIDE ADDITIONAL HSA's BTWN PENETRATION EDGE AND MID-SPAN BM TO ATTAIN HSA's 6"oc MAX	(C#_")	REQD PRE-CAMBER AT MID-SPAN OF BMS, CAMBER TOLERANCE SHALL BE +1/4", -0"		X-BRIDG
	CONC WALL, SEE SCHED ON (S301)			T=C=nK	ROOF JST TOP CHORD SHALL BE DESIGNED FOR AN ADDITIONAL LOAD OF _ KIPS IN TENSION AND COMPRESSION. LOADS ARE PROVIDED AT ULTIMATE STRENGTH LEVEL		HORIZ BRDG REQD FOR UPLIFT, SEE STL JST SUPPLIER FOR REQUIREMENTS
or	STL COL, SEE SCHED ON (S304)	SC-x	STL COL, SEE SCHED ON (S304)			L3	L3x3 1/4 BRACE, SEE (S400) SHEETS FOR ADDITIONAL INFORMATION
OWSJ (XXX/XXX)	OPEN WEB STEEL JOIST (TOTAL LOAD/ LIVE LOAD) IN plf	CB-x	CONC BM, SEE SCHED ON (S301)	(SFRSC)	SEISMIC FORCE RESISTING SYSTEM COLLECTOR, SEE DETS ON SHEET (S405) FOR CONNECTIONS	L4	L4x4x3/8 FRAME BRACING, SEE DETAILS ON (S404) AND (S406)
	SFRSC CONNECTION, SEE (S400) SHEETS FOR DETAILS	RD	ROOF DRAIN, SEE ARCH AND MECH FOR EXACT LOCATION. SEE DET (B3/S701) FOR FRAMING	ML-x	MAS LINTEL, SEE SCHED ON (S301)	L5	L5x5x3/8 FRAME BRACING, SEE DETAILS ON SHEETS (S404) AND (S406)

KEY PLAN

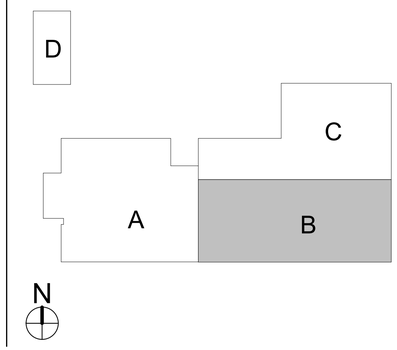

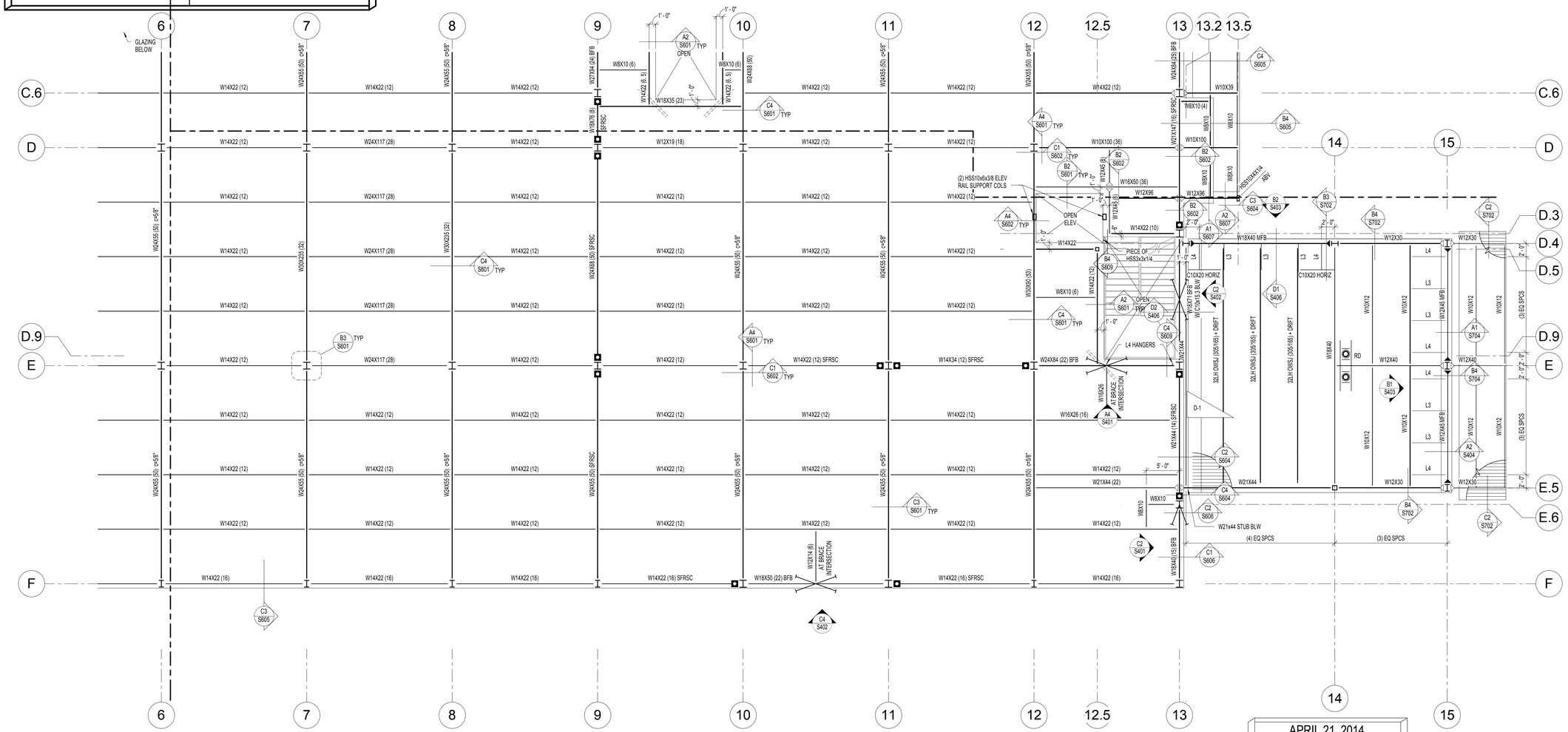

A1 S102B LEVEL 2 FLOOR FRAMING - AREA B
SCALE: 1/8" = 1'-0"

APRIL 21, 2014
BID SET

NOTE:
THESE STRUCTURAL DRAWINGS ARE BASED ON ARCHITECTURAL DRAWINGS DATED APRIL 10, 2014

DIMENSIONS AND ELEVATIONS, AS THEY RELATE TO THE BUILDING IN GENERAL, i.e. GRID TO GRID DIMENSIONS OR DECK BEARING ELEVATIONS, ARE SUPPLIED BY THE ARCHITECT. THEY ARE PROVIDED ON THE STRUCTURAL PLANS AND DETAILS FOR THE CONVENIENCE OF THE CONTRACTOR. VERIFY DIMENSIONS AND ELEVATIONS WITH ARCHITECTURAL DRAWINGS.

DUNN ASSOCIATES, INC
Consulting Structural Engineers
WWW.DUNN-SE.COM
PH: 801-575-8877 FAX: 801-575-8875

CRSA
649 E. South Temple
Salt Lake City, UT 84102
801.355.5915

MWL
11798 N. Lakeridge Pkwy.
Ashland, VA 23005
804-228-7473

State of Utah
Department of Administrative Services
Division of Facilities Construction & Management
4110 State Office Building
Salt Lake City, Utah 84114
Phone: (801) 538 - 3018
Fax: (801) 538 - 3267

DIVISION OF FACILITIES CONSTRUCTION AND MANAGEMENT
REVIEWED FOR CODE COMPLIANCE
SIGNATURE: Ernie Gelle
DATE: 08-05-2014

PROFESSIONAL STRUCTURAL ENGINEER
No. 295747
TAIT A. KETCHAM
04/21/2014
STATE OF UTAH

ARCHITECT-ENGINEER STAMP

Unified State Laboratory Module 2

4451 South 2700 West, Taylorsville, UT 84118

DFCM #:	13020300
Project #:	13062

DATE:	ISSUE TYPE:
APRIL 21, 2014	BID SET

CHECKED BY	TAK
DRAWN BY	SJS

LEVEL 2 FLOOR FRAMING PLAN - AREA B

S102B

VOLUME 1

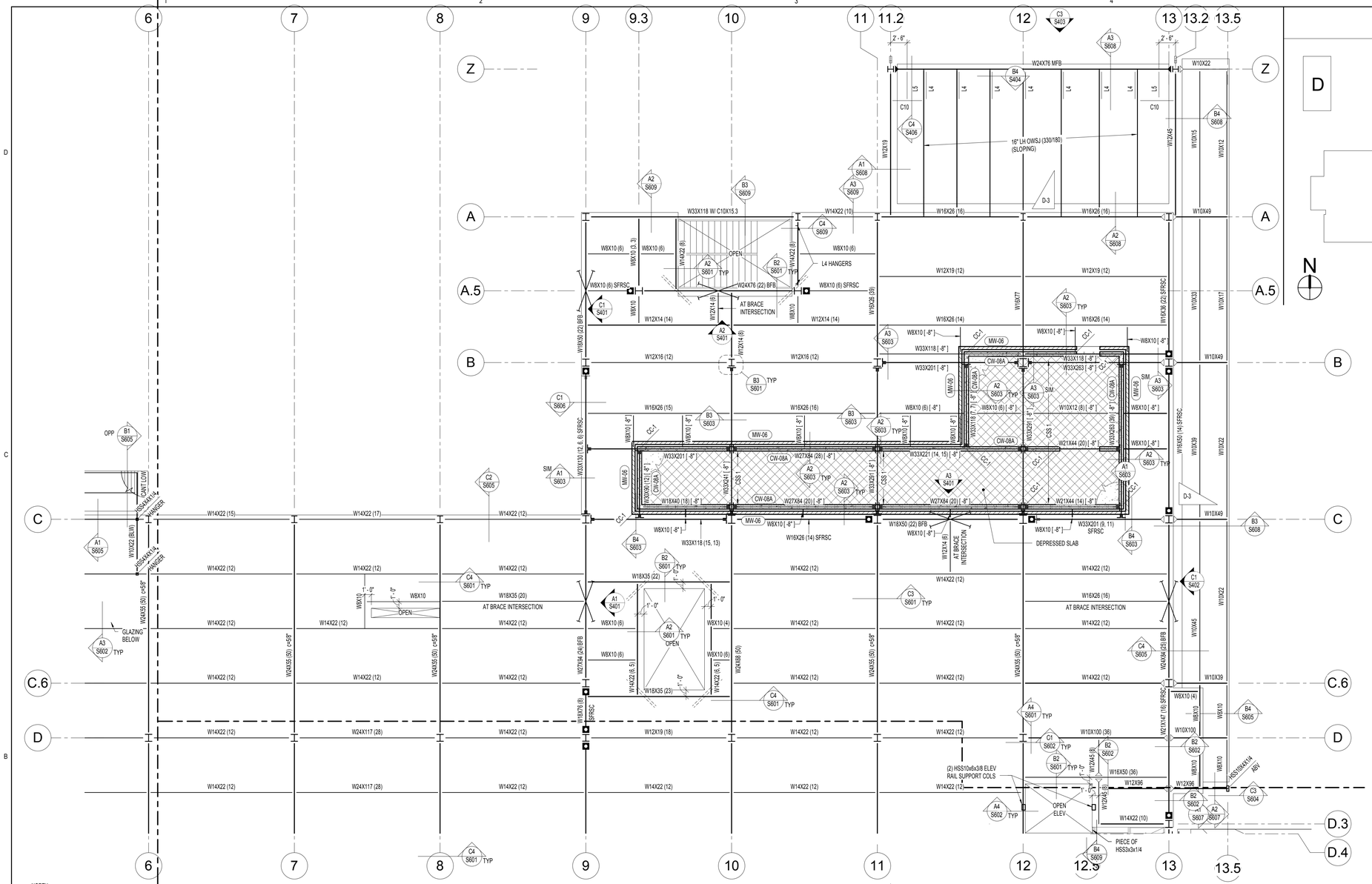

A1 LEVEL 2 FLOOR FRAMING - AREA C
S102C SCALE: 1/8" = 1'-0"

KEY PLAN

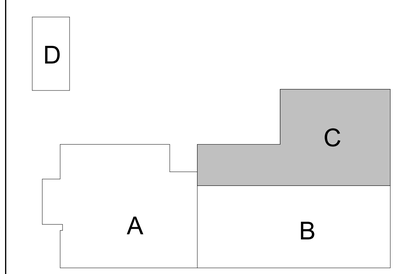

ROOF FRAMING PLAN NOTES:

1. VERIFY ROOF SLOPES, DRAINS, AND DECK BEARING ELEVATIONS WITH ARCHITECTURAL DRAWINGS. SEE ROOF FRAMING DETAILS ON SHEET (S701).
2. ALL JOISTS SHALL HAVE 5" DEEP BEARING ENDS. UNO.
3. ALL GIRDERS SHALL HAVE 7 1/2" DEEP BEARING ENDS. UNO.
4. ALL ROOF OPENINGS SHALL BE FRAMED AS INDICATED IRROOF FRAMING DETAILS ON SHEET (S701).
5. SEE ROOF FRAMING DETAILS ON SHEET (S701) FOR CONCENTRATED LOADS LOCATED FURTHER THAN 6" FROM JOIST/GIRDER PANEL JOINT.
6. SEE ROOF FRAMING DETAILS ON SHEET (S701) FOR MECHANICAL UNITS HUNG BELOW JOISTS.
7. VERIFY SIZE, WEIGHT, AND LOCATION OF ALL ROOF TOP MECHANICAL UNITS WITH ARCHITECTURAL AND MECHANICAL DRAWINGS. SEE ROOF FRAMING DETAILS ON SHEET (S701) FOR STEEL FRAMES AT ALL ROOF TOP EQUIPMENT. COORDINATE OPENINGS WITH MECHANICAL, ELECTRICAL, AND GENERAL CONTRACTORS.
8. OPEN WEB STEEL JOISTS AND JOIST GIRDERS SHALL BE DESIGNATED BY THE MANUFACTURER TO SUPPORT THE MECHANICAL AND LATERAL LOADS SHOWN ON THE ROOF FRAMING PLANS IN ADDITION TO THE UNIFORM AND POINLOADS SHOWN.
9. WHERE SKYLIGHTS OR MECHANICAL UNITS INTERRUPT HORIZONTAL BRIDGING, PROVIDE CROSS BRIDGING AT JOIST SPACES ON EA SIDE. TYPICAL.
10. WHERE DIAGONAL BRIDGING CONFLICTS WITH MECHANICAL DUCTS, REMOVE DIAGONAL BRIDGING AND REPLACE WITH HORIZONTAL BRIDGING (AFTER ROOF DECK IS IN PLACE).
11. * - INDICATES THAT THESE JOISTS SHALL BE DESIGNED FOR AN ADLOAD OF 1000# AT ANY TOP CHORD PANEL POINT. THIS LOAD IS TO BE ADDED TO THE GIRDER TOP CHORD LOAD. MULTIPLE *** ARE ADDITIVE.
12. JOIST DESIGNER SHALL DESIGN JOISTS AND SUPPLY ADDITIONAL BRIDGING AS REQUIRED FOR ___ PSF NET UPLIFT DUE TO WIND. THERE IS NO UPLIFT ON GIRDERS.
13. SEE SHEETS (S401) AND (S402) FOR MOMENT FRAME ELEVATIONS AND DETAILS ON SHEET (S701).
14. SEE ARCHITECTURAL PLANS FOR ALL STEEL COLUMN LOCATIONS (DIMENSIONS).
15. SPRINKLER DESIGNER SHALL COORDINATE THE SPRINKLER DESIGN WITH THE JOIST/GIRDER SHOP DRAWINGS.

FLOOR FRAMING PLAN NOTES:

1. VERIFY WALL FLOOR OPENINGS FOR MECHANICAL SHAFTS, STAIRS, ETC. WITH ARCHITECTURAL DRAWINGS.
2. SEE FLOOR FRAMING DETAILS ON SHEET (S601) FOR FRAMING AROUND MISCELLANEOUS OPENINGS.
3. SEE SHEETS (S401) AND (S402) FOR FRAME ELEVATIONS AND DETAILS.
4. SEE ARCHITECTURAL DRAWINGS FOR ALL DIMENSIONS TO STEEL COLUMNS AND SLAB EDGES.
5. SEE FOOTING AND FOUNDATION DETAILS ON SHEET (S501) FOR REINFORCING AROUND MISCELLANEOUS OPENINGS IN CONCRETE WALLS.
6. ALL FLOOR GIRDERS SHALL HAVE 7 1/2" ENDS. UNO.

SNOW DRIFT LOADING DIAGRAM

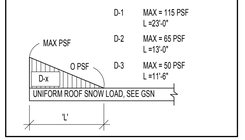

D-1	MAX = 115 PSF	L =23'-0"
D-2	MAX = 65 PSF	L =13'-0"
D-3	MAX = 50 PSF	L =11'-8"

MARKS & SYMBOLS LEGEND

	SECTION MARK SHEET NUMBER		CONC COL, SEE SCHED ON (S301)	CC-x	CONC COL, SEE SCHED ON (S301)		MAS WALL, SEE SCHED ON (S302)
	FRAME EL MARK FRAME EL ON (S400's)		LATERAL FRAME MOMENT CONNECTIONS	CL-x	CONC LINTEL, SEE SCHED ON (S301)	MW-X	MAS WALL, SEE SCHED ON (S302)
			GRAVITY MOMENT CONNECTIONS	W_x_	COMPOSITE STL BMS, SEE GSN ON (S002)	CW-X	CONC WALL, SEE SCHED ON (S301)
	CONC OVER MTL DECK, SEE GSN ON (S002)		DBL SHEAR CONNECTION, SEE SCHED ON (S303)	(x)	NUMBER OF HSA FOR SECTION OF COMPOSITE STL BM, SEE GSN ON (S002)		CONC WALL, SEE SCHED ON (S301)
	ADDITIONAL CONC REINF OF (2) #6 BARS x 6'-0", CTR ON CORNERS, NO SPLICES	'h' x 'w'	INDICATES A HEIGHT (IN) x WIDTH (IN) BM PENETRATION CTR IN THE BM DEPTH, SEE DET (A2/S602). PROVIDE A MAT REINF IN THE SLAB OF #4 AT 12"oc EW, SEE DET (A2/S602) FOR EXTENT OF REINF OVER PENETRATION. PROVIDE ADDITIONAL HSA's BTWN PENETRATION EDGE AND MID-SPAN BM TO ATTAIN HSA's 6"oc MAX	(c=_")	REQD PRE-CAMBER AT MID-SPAN OF BMS, CAMBER TOLERANCE SHALL BE ±1/4", -0"		CONCRETE SUSPENDED SLAB, SEE SCHED ON (S301)
	DEPRESSED SLAB, SEE ARCH PLANS FOR EXACT LOCATION AND EL			T=C=xK	ROOF JST TOP CHORD SHALL BE DESIGNED FOR AN ADDITIONAL LOAD OF __KIPS IN TENSION AND COMPRESSION. LOADS ARE PROVIDED AT ULTIMATE STRENGTH LEVEL	[X"]	INDICATES THE DISTANCE THAT THE BEAM IS OFFSET FROM THE STANDARD TISTL
	CONC WALL, SEE SCHED ON (S301)	SC-x	STL COL, SEE SCHED ON (S304)	(SFRSC)	SEISMIC FORCE RESISTING SYSTEM COLLECTOR. SEE DETS ON SHEET (S405) FOR CONNECTIONS	L3	L3x3 1/4 BRACE, SEE (S400) SHEETS FOR ADDITIONAL INFORMATION
	STL COL, SEE SCHED ON (S304)	CB-x	CONC BM, SEE SCHED ON (S301)	CSS-X	CONCRETE SUSPENDED SLAB, SEE (A1/S301)	L4	L4x4x3/8 FRAME BRACING, SEE DETAILS ON (S404) AND (S406)
	SFRSC CONNECTION, SEE (S400) SHEETS FOR DETAILS	RD	ROOF DRAIN, SEE ARCH AND MECH FOR EXACT LOCATION. SEE DET (B3/S701) FOR FRAMING	OWSJ (XXX/XXX)	OPEN WEB STEEL JOIST (TOTAL LOAD/ LIVE LOAD) IN plf	L5	L5x5x3/8 FRAME BRACING, SEE DETAILS ON SHEETS (S404) AND (S406)
						C10	C10x20 HORIZONTAL, SEE DETAILS ON SHEET (S406)

APRIL 21, 2014
BID SET

NOTE:
THESE STRUCTURAL DRAWINGS ARE BASED ON ARCHITECTURAL DRAWINGS DATED APRIL 10, 2014

DIMENSIONS AND ELEVATIONS, AS THEY RELATE TO THE BUILDING IN GENERAL, i.e. GRID TO GRID DIMENSIONS OR DECK BEARING ELEVATIONS, ARE SUPPLIED BY THE ARCHITECT. THEY ARE PROVIDED ON THE STRUCTURAL PLANS AND DETAILS FOR THE CONVENIENCE OF THE CONTRACTOR. VERIFY DIMENSIONS AND ELEVATIONS WITH ARCHITECTURAL DRAWINGS.

DUNN ASSOCIATES, INC
Consulting Structural Engineers
WWW.DUNN-SE.COM
PH: 801-575-8677 FAX: 801-575-8875

CRSA
649 E. South Temple
Salt Lake City, UT 84102
801.355.5915

MWL
11798 N. Lakeridge Pkwy.
Ashland, VA 23005
804-228-7473

State of Utah
Department of Administrative Services
Division of Facilities Construction & Management
4110 State Office Building
Salt Lake City, Utah 84114
Phone: (801) 538 - 3018
Fax: (801) 538 - 3267

DIVISION OF FACILITIES CONSTRUCTION AND MANAGEMENT
REVIEWED FOR CODE COMPLIANCE
SIGNATURE: Ernie Gale
DATE: 08-05-2014

PROFESSIONAL STRUCTURAL ENGINEER
No. 295747
TAIT A. KETCHAM
04/21/2014
STATE OF UTAH

ARCHITECT-ENGINEER STAMP

Unified State Laboratory Module 2

4451 South 2700 West,
Taylorsville, UT 84118

DFCM #:	13020300
Project #:	13062
DATE:	ISSUE TYPE:
APRIL 21, 2014	BID SET
CHECKED BY	TAK
DRAWN BY	SJS

LEVEL 2 FLOOR FRAMING PLAN - AREA C

S102C

VOLUME 1

ROOF FRAMING PLAN NOTES:

1. VERIFY ROOF SLOPES, DRAINS, AND DECK BEARING ELEVATIONS WITH ARCHITECTURAL DRAWINGS. SEE ROOF FRAMING DETAILS ON SHEET (S701).
2. ALL JOISTS SHALL BE FLUSH FRAMED. UNO.
3. ALL ROOF OPENINGS SHALL BE FRAMED AS INDICATED INROOF FRAMING DETAILS ON SHEET (S701).
4. SEE ROOF FRAMING DETAILS ON SHEET (S701) FORCONCENTRATED LOADS LOCATED FURTHER THAN 6" FROM JOIST/GIRDER PANEL JOINT.
5. SEE ROOF FRAMING DETAILS ON SHEET (S701) FORMECHANICAL UNITS HUNG BELOW JOISTS.
6. VERIFY SIZE, WEIGHT, AND LOCATION OF ALL ROOF TOP MECHANICAL UNITS WITH ARCHITECTURAL AND MECHANICAL DRAWINGS. SEE ROOF FRAMING DETAILS ON SHEET (S701) FOR STEEL FRAMES AT ALL ROOF TOP EQUIPMENT. COORDINATE OPENINGS WITH MECHANICAL, ELECTRICAL, AND GENERAL CONTRACTORS.
7. OPEN WEB STEEL JOISTS AND JOIST GIRDERS SHALL BE DESIGNATED BY THE MANUFACTURER TO SUPPORT THE MECHANICAL AND LATERAL LOADS SHOWN ON THE ROOFRAMING PLANS IN ADDITION TO THE UNIFORM AND POINT LOADS SHOWN.
8. WHERE SKYLIGHTS OR MECHANICAL UNITS INTERRUPT HORIZONTAL BRIDGING, PROVIDE CROSS BRIDGING AT JOIST SPACES ON EA SIDE. TYPICAL.
9. WHERE DIAGONAL BRIDGING CONFLICTS WITH MECHANICAL DUCTS, REMOVE DIAGONAL BRIDGING AND REPLACE WITH HORIZONTAL BRIDGING (AFTER ROOF DECK IS IN PLACE).
10. * - INDICATES THAT THESE JOISTS SHALL BE DESIGNED FOR AN ADLOAD OF 1000# AT ANY TOP CHORD PANEL POINT. THIS LOAD IS TO BE ADDED TO THE GIRDER TOP CHORD LOAD. MULTIPLE ** ARE ADDITIVE.
11. JOIST DESIGNER SHALL DESIGN JOISTS AND SUPPLY ADDITIONAL BRIDGING AS REQUIRED FOR 8 PSF NET UPLIFT DITO WIND. THERE IS NO UPLIFT ON GIRDERS.
12. SEE SHEETS (S401) AND (S402) FOR FRAME ELEVATIONS.
13. SEE ARCHITECTURAL PLANS FOR ALL STEEL COLUMN LOCATIONS (DIMENSIONS).
14. SPRINKLER DESIGNER SHALL COORDINATE THE SPRINKLER DESIGN WITH THE JOIST/GIRDER SHOP DRAWINGS.

MARKS AND SYMBOLS LEGEND

- SECTION MARK / SHEET NUMBER
- FRAME EL MARK FRAME / EL ON (S400's)
- MTL ROOF DECK, SEE GSN ON (S101)
- BRG WALL BLW
- STL COL, SEE SCHED ON (S304)
- LATERAL FRAME MOMENT CONNECTIONS
- GRAVITY MOMENT CONNECTIONS
- SFRSC CONNECTION, SEE (S400) SHEETS FOR DETAILS
- DOUBLE SHEAR CONNECTION, SEE SCHED ON (S303)
- ML-x — MAS LINTEL, SEE SCHED ON (S301)
- T=C=xK — ROOF JST TOP CHORD SHALL BE DESIGNED FOR AN ADDITIONAL LOAD OF __KIPS IN TENSION AND COMPRESSION. LOADS ARE PROVIDED AT ULTIMATE STRENGTH LEVEL
- RD — ROOF DRAIN, SEE ARCH AND MECH FOR EXACT LOCATION. SEE DET (B3/S701) FOR FRAMING
- (SFRSC) — SEISMIC FORCE RESISTING SYSTEM COLLECTOR. SEE DETS ON SHEET (S405) FOR CONNECTIONS
- L3 — L3x3 1/4 BRACE, SEE (S400) SHEETS FOR ADDITIONAL INFORMATION
- L4 — L4x4x3/8 FRAME BRACING, SEE DETAILS ON (S404) AND (S406)
- L5 — L5x5x3/8 FRAME BRACING, SEE DETAILS ON SHEETS (S404) AND (S406)
- ROOF ANCHOR, SEE DETAIL (C3/S703). SEE ARCH DWG FOR LOCATION
- OWSJ (XXX/XXX) — OPEN WEB STEEL JOIST (TOTAL LOAD/ LIVE LOAD)
- INDICATES PERFORATED ROOF DECK, SEE ARCH

SNOW DRIFT LOADING DIAGRAM

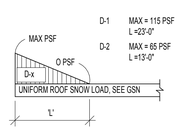

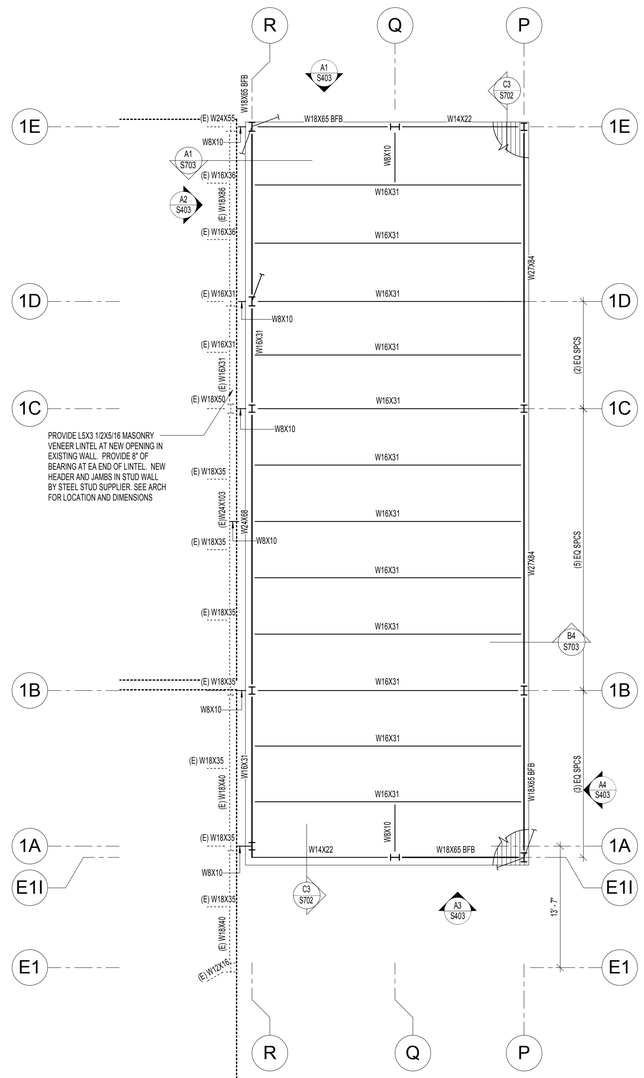

NORTH

A2 / S102D ROOF FRAMING PLAN - AREA D
SCALE: 1/8" = 1'-0"

KEY PLAN

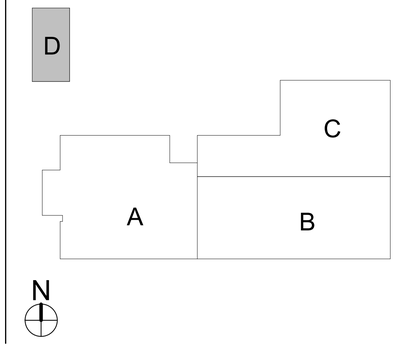

APRIL 21, 2014
BID SET

NOTE:
THESE STRUCTURAL DRAWINGS ARE BASED ON ARCHITECTURAL DRAWINGS DATED APRIL 10, 2014

DIMENSIONS AND ELEVATIONS, AS THEY RELATE TO THE BUILDING IN GENERAL, i.e. GRID TO GRID DIMENSIONS OR DECK BEARING ELEVATIONS, ARE SUPPLIED BY THE ARCHITECT. THEY ARE PROVIDED ON THE STRUCTURAL PLANS AND DETAILS FOR THE CONVENIENCE OF THE CONTRACTOR. VERIFY DIMENSIONS AND ELEVATIONS WITH ARCHITECTURAL DRAWINGS.

DUNN ASSOCIATES, INC
Consulting Structural Engineers
WWW.DUNN-SE.COM
PH: 801-575-8877 FAX: 801-575-8875

CRSA
649 E. South Temple
Salt Lake City, UT 84102
801.355.5915

MWL
11798 N. Lakeridge Pkwy.
Ashland, VA 23005
804-228-7473

State of Utah
Department of Administrative Services
Division of Facilities Construction & Management
4110 State Office Building
Salt Lake City, Utah 84114
Phone: (801) 538 - 3018
Fax: (801) 538 - 3267

DIVISION OF FACILITIES CONSTRUCTION AND MANAGEMENT
REVIEWED FOR CODE COMPLIANCE
SIGNATURE:
DATE: 08-05-2014

PROFESSIONAL STRUCTURAL ENGINEER
No. 295747
TAIT A. KETCHAM
04/21/2014
STATE OF UTAH

ARCHITECT-ENGINEER STAMP

Unified State Laboratory Module 2

4451 South 2700 West, Taylorsville, UT 84118

DFCM #:	13020300
Project #:	13062
DATE:	ISSUE TYPE:
APRIL 21, 2014	BID SET
CHECKED BY	TAK
DRAWN BY	SJS

ROOF FRAMING PLAN - AREA D

S102D

VOLUME 1

ROOF FRAMING PLAN NOTES:

1. VERIFY ROOF SLOPES, DRAINS, AND DECK BEARING ELEVATIONS WITH ARCHITECTURAL DRAWINGS. SEE ROOF FRAMING DETAILS ON SHEET (S701).
2. ALL JOISTS SHALL HAVE 5" DEEP BEARING ENDS. UNO.
3. ALL GIRDERS SHALL HAVE 7 1/2" DEEP BEARING ENDS. UNO.
4. ALL ROOF OPENINGS SHALL BE FRAMED AS INDICATED IRROOF FRAMING DETAILS ON SHEET (S701).
5. SEE ROOF FRAMING DETAILS ON SHEET (S701) FOR CONCENTRATED LOADS LOCATED FURTHER THAN 6" FROM JOIST/GIRDER PANEL JOINT.
6. SEE ROOF FRAMING DETAILS ON SHEET (S701) FOR MECHANICAL UNITS HUNG BELOW JOISTS.
7. VERIFY SIZE, WEIGHT, AND LOCATION OF ALL ROOF TOP MECHANICAL UNITS WITH ARCHITECTURAL AND MECHANICAL DRAWINGS. SEE ROOF FRAMING DETAILS ON SHEET (S701) FOR STEEL FRAMES AT ALL ROOF TOP EQUIPMENT. COORDINATE OPENINGS WITH MECHANICAL, ELECTRICAL, AND GENERAL CONTRACTORS.
8. OPEN WEB STEEL JOISTS AND JOIST GIRDERS SHALL BE DESIGNATED BY THE MANUFACTURER TO SUPPORT THE MECHANICAL AND LATERAL LOADS SHOWN ON THE ROOF FRAMING PLANS IN ADDITION TO THE UNIFORM AND POINLOADS SHOWN.
9. WHERE SKYLIGHTS OR MECHANICAL UNITS INTERRUPT HORIZONTAL BRIDGING, PROVIDE CROSS BRIDGING AT JOIST SPACES ON EA SIDE. TYPICAL
10. WHERE DIAGONAL BRIDGING CONFLICTS WITH MECHANICAL DUCTS, REMOVE DIAGONAL BRIDGING AND REPLACE WITH HORIZONTAL BRIDGING (AFTER ROOF DECK IS IN PLACE).
11. * - INDICATES THAT THESE JOISTS SHALL BE DESIGNED FOR AN ADLOAD OF 1000# AT ANY TOP CHORD PANEL POINT. THIS LOAD IS TO BE ADDED TO THE GIRDER TOP CHORD LOAD. MULTIPLE *** ARE ADDITIVE.
12. JOIST DESIGNER SHALL DESIGN JOISTS AND SUPPLY ADDITIONAL BRIDGING AS REQUIRED FOR ___ PSF NET UPLIFT DUE TO WIND. THERE IS NO UPLIFT ON GIRDERS.
13. SEE SHEETS (S401) AND (S402) FOR MOMENT FRAME ELEVATIONS AND DETAILS ON SHEET (S701).
14. SEE ARCHITECTURAL PLANS FOR ALL STEEL COLUMN LOCATIONS (DIMENSIONS).
15. SPRINKLER DESIGNER SHALL COORDINATE THE SPRINKLER DESIGN WITH THE JOIST/GIRDER SHOP DRAWINGS.

FLOOR FRAMING PLAN NOTES:

1. VERIFY WALL FLOOR OPENINGS FOR MECHANICAL SHAFTS, STAIRS, ETC. WITH ARCHITECTURAL DRAWINGS.
2. SEE FLOOR FRAMING DETAILS ON SHEET (S601) FOR FRAMING AROUND MISCELLANEOUS OPENINGS.
3. SEE SHEETS (S401) AND (S402) FOR FRAME ELEVATIONS AND DETAILS.
4. SEE ARCHITECTURAL DRAWINGS FOR ALL DIMENSIONS TO STEEL COLUMNS AND SLAB EDGES.
5. SEE FOOTING AND FOUNDATION DETAILS ON SHEET (S501) FOR REINFORCING AROUND MISCELLANEOUS OPENINGS IN CONCRETE WALLS.
6. ALL FLOOR GIRDERS SHALL HAVE 7 1/2" ENDS. UNO.

SNOW DRIFT LOADING DIAGRAM

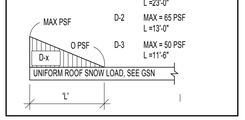

MARKS & SYMBOLS LEGEND

SECTION MARK / SHEET NUMBER	CONC COL, SEE SCHED ON (S301)	CC-x	CONC COL, SEE SCHED ON (S301)	MAS WALL, SEE SCHED ON (S302)	
FRAME EL MARK FRAME / EL ON (S400's)	LATERAL FRAME MOMENT CONNECTIONS	CL-x	CONC LINTEL, SEE SCHED ON (S301)	MW-X	MAS WALL, SEE SCHED ON (S302)
	GRAVITY MOMENT CONNECTIONS	W_x_	COMPOSITE STL BMS, SEE GSN ON (S002)	CW-X	CONC WALL, SEE SCHED ON (S301)
CONC OVER MTL DECK, SEE GSN ON (S002)	DBL SHEAR CONNECTION, SEE SCHED ON (S303)	{x}	NUMBER OF HSA FOR SECTION OF COMPOSITE STL BM, SEE GSN ON (S002)		CONC WALL, SEE SCHED ON (S301)
ADDITIONAL CONC REINF OF (2) #6 BARS x 6'-0", CTR ON CORNERS, NO SPLICES	INDICATES A HEIGHT (IN) x WIDTH (IN) BM PENETRATION CTR IN THE BM DEPTH, SEE DET (A2/S602), PROVIDE A MAT REINF IN THE SLAB OF #4 AT 12"oc EW, SEE DET (A2/S602) FOR EXTENT OF REINF OVER PENETRATION. PROVIDE ADDITIONAL HSA's BTWN PENETRATION EDGE AND MID-SPAN BM TO ATTAIN HSA's 6"oc MAX	'h' x 'w'	REQD PRE-CAMBER AT MID-SPAN OF BMS, CAMBER TOLERANCE SHALL BE +1/4", -0"		CONCRETE SUSPENDED SLAB, SEE SCHED ON (S301)
DEPRESSED SLAB, SEE ARCH PLANS FOR EXACT LOCATION AND EL		T=C+wK	ROOF JST TOP CHORD SHALL BE DESIGNED FOR AN ADDITIONAL LOAD OF __KIPS IN TENSION AND COMPRESSION. LOADS ARE PROVIDED AT ULTIMATE STRENGTH LEVEL	[X"]	INDICATES THE DISTANCE THAT THE BEAM IS OFFSET FROM THE STANDARD T/STL
CONC WALL, SEE SCHED ON (S301)	SC-x	(SFRSC)	SEISMIC FORCE RESISTING SYSTEM COLLECTOR. SEE DETS ON SHEET (S405) FOR CONNECTIONS	L3	L3x3 1/4 BRACE, SEE (S400) SHEETS FOR ADDITIONAL INFORMATION
STL COL, SEE SCHED ON (S304)	CB-x	CSS-X	CONCRETE SUSPENDED SLAB, SEE (A1/S301)	L4	L4x4x3/8 FRAME BRACING, SEE DETAILS ON (S404) AND (S406)
SFRSC CONNECTION, SEE (S400) SHEETS FOR DETAILS	RD	OWSJ (XXX/XXX)	OPEN WEB STEEL JOIST (TOTAL LOAD/ LIVE LOAD) IN pif	L5	L5x5x3/8 FRAME BRACING, SEE DETAILS ON SHEETS (S404) AND (S406)
				C10	C10x20 HORIZONTAL. SEE DETAILS ON SHEET (S406)

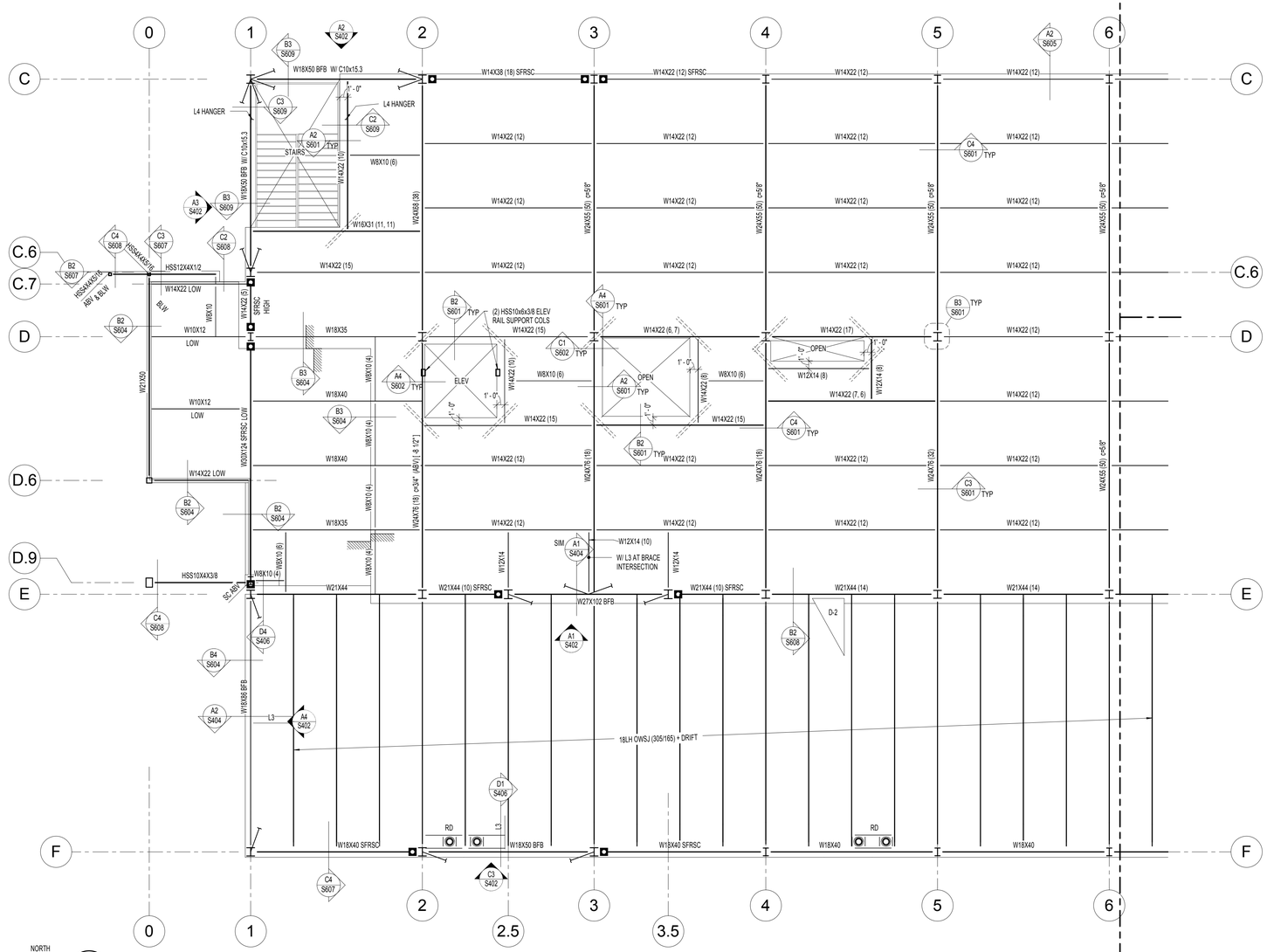

NORTH

A1 / S103A LEVEL 3 FLOOR FRAMING PLAN - AREA A
SCALE: 1/8" = 1'-0"

KEY PLAN

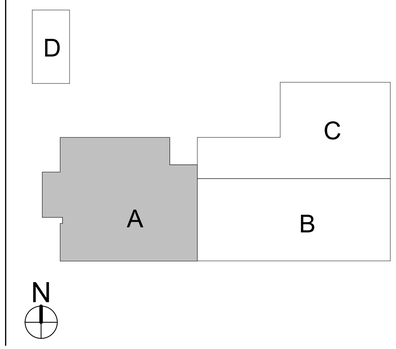

APRIL 21, 2014
BID SET

NOTE:
THESE STRUCTURAL DRAWINGS ARE BASED ON ARCHITECTURAL DRAWINGS DATED APRIL 10, 2014

DIMENSIONS AND ELEVATIONS, AS THEY RELATE TO THE BUILDING IN GENERAL, i.e. GRID TO GRID DIMENSIONS OR DECK BEARING ELEVATIONS, ARE SUPPLIED BY THE ARCHITECT. THEY ARE PROVIDED ON THE STRUCTURAL PLANS AND DETAILS FOR THE CONVENIENCE OF THE CONTRACTOR. VERIFY DIMENSIONS AND ELEVATIONS WITH ARCHITECTURAL DRAWINGS.

DUNN ASSOCIATES, INC
Consulting Structural Engineers
WWW.DUNN-SE.COM
PH: 801-575-8877 FAX: 801-575-8875

CRSA
649 E. South Temple
Salt Lake City, UT 84102
801.355.5915

MWL
11798 N. Lakeridge Pkwy.
Ashland, VA 23005
804-228-7473

State of Utah
Department of Administrative Services
Division of Facilities Construction & Management
4110 State Office Building
Salt Lake City, Utah 84114
Phone: (801) 538 - 3018
Fax: (801) 538 - 3267

DIVISION OF FACILITIES CONSTRUCTION AND MANAGEMENT
REVIEWED FOR CODE COMPLIANCE
SIGNATURE: Ernie Gelle
DATE: 08-05-2014

PROFESSIONAL STRUCTURAL ENGINEER
No. 295747
TAIT A. KETCHAM
04/28/2014
STATE OF UTAH

ARCHITECT-ENGINEER STAMP

Unified State Laboratory Module 2

4451 South 2700 West, Taylorsville, UT 84118

DFCM #:	13020300
Project #:	13062
DATE:	ISSUE TYPE:
APRIL 21, 2014	BID SET
CHECKED BY	TAK
DRAWN BY	SJS

LEVEL 3 FLOOR FRAMING PLAN - AREA A

S103A

VOLUME 1

ROOF FRAMING PLAN NOTES:

1. VERIFY ROOF SLOPES, DRAINS, AND DECK BEARING ELEVATIONS WITH ARCHITECTURAL DRAWINGS. SEE ROOF FRAMING DETAILS ON SHEET (S701).
2. ALL JOISTS SHALL HAVE 5" DEEP BEARING ENDS. UNO.
3. ALL GIRDERS SHALL HAVE 7 1/2" DEEP BEARING ENDS. UNO.
4. ALL ROOF OPENINGS SHALL BE FRAMED AS INDICATED IROOF FRAMING DETAILS ON SHEET (S701).
5. SEE ROOF FRAMING DETAILS ON SHEET (S701) FOR CONCENTRATED LOADS LOCATED FURTHER THAN 6" FROM JOIST/GIRDER PANEL JOINT.
6. SEE ROOF FRAMING DETAILS ON SHEET (S701) FOR MECHANICAL UNITS HUNG BELOW JOISTS.
7. VERIFY SIZE, WEIGHT, AND LOCATION OF ALL ROOF TOP MECHANICAL UNITS WITH ARCHITECTURAL AND MECHANICAL DRAWINGS. SEE ROOF FRAMING DETAILS ON SHEET (S701) FOR STEEL FRAMES AT ALL ROOF TOP EQUIPMENT. COORDINATE OPENINGS WITH MECHANICAL, ELECTRICAL, AND GENERAL CONTRACTORS.
8. OPEN WEB STEEL JOISTS AND JOIST GIRDERS SHALL BE DESIGNATED BY THE MANUFACTURER TO SUPPORT THE MECHANICAL AND LATERAL LOADS SHOWN ON THE ROOF FRAMING PLANS IN ADDITION TO THE UNIFORM AND POINLOADS SHOWN.
9. WHERE SKYLIGHTS OR MECHANICAL UNITS INTERRUPT HORIZONTAL BRIDGING, PROVIDE CROSS BRIDGING AT JOIST SPACES ON EA SIDE, TYPICAL.
10. WHERE DIAGONAL BRIDGING CONFLICTS WITH MECHANICAL DUCTS, REMOVE DIAGONAL BRIDGING AND REPLACE WITH HORIZONTAL BRIDGING (AFTER ROOF DECK IS IN PLACE).
11. * - INDICATES THAT THESE JOISTS SHALL BE DESIGNED FOR AN ADLOAD OF 1000# AT ANY TOP CHORD PANEL POINT. THIS LOAD IS TO BE ADDED TO THE GIRDER TOP CHORD LOAD. MULTIPLE *** ARE ADDITIVE.
12. JOIST DESIGNER SHALL DESIGN JOISTS AND SUPPLY ADDITIONAL BRIDGING AS REQUIRED FOR ___ PSF NET UPLIFT DUE TO WIND. THERE IS NO UPLIFT ON GIRDERS.
13. SEE SHEETS (S401) AND (S402) FOR MOMENT FRAME ELEVATIONS AND DETAILS ON SHEET (S701).
14. SEE ARCHITECTURAL PLANS FOR ALL STEEL COLUMN LOCATIONS (DIMENSIONS).
15. SPRINKLER DESIGNER SHALL COORDINATE THE SPRINKLER DESIGN WITH THE JOIST/GIRDER SHOP DRAWINGS.

FLOOR FRAMING PLAN NOTES:

1. VERIFY WALL FLOOR OPENINGS FOR MECHANICAL SHAFTS, STAIRS, ETC. WITH ARCHITECTURAL DRAWINGS.
2. SEE FLOOR FRAMING DETAILS ON SHEET (S601) FOR FRAMING AROUND MISCELLANEOUS OPENINGS.
3. SEE SHEETS (S401) AND (S402) FOR FRAME ELEVATIONS AND DETAILS.
4. SEE ARCHITECTURAL DRAWINGS FOR ALL DIMENSIONS TO STEEL COLUMNS AND SLAB EDGES.
5. SEE FOOTING AND FOUNDATION DETAILS ON SHEET (S501) FOR REINFORCING AROUND MISCELLANEOUS OPENINGS IN CONCRETE WALLS.
6. ALL FLOOR GIRDERS SHALL HAVE 7 1/2" ENDS. UNO.

SNOW DRIFT LOADING DIAGRAM

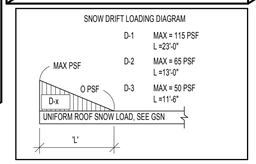

MARKS & SYMBOLS LEGEND

SECTION MARK / SHEET NUMBER	CONC COL, SEE SCHED ON (S301)	CC-x	CONC COL, SEE SCHED ON (S301)		MAS WALL, SEE SCHED ON (S302)
FRAME EL MARK FRAME / EL ON (S400's)	LATERAL FRAME MOMENT CONNECTIONS	CL-x	CONC LINTEL, SEE SCHED ON (S301)	MW-X	MAS WALL, SEE SCHED ON (S302)
	GRAVITY MOMENT CONNECTIONS	W_x_	COMPOSITE STL BMS, SEE GSN ON (S002)	CW-X	CONC WALL, SEE SCHED ON (S301)
CONC OVER MTL DECK, SEE GSN ON (S002)	DBL SHEAR CONNECTION, SEE SCHED ON (S303)	(x)	NUMBER OF HSA FOR SECTION OF COMPOSITE STL BM, SEE GSN ON (S002)		CONC WALL, SEE SCHED ON (S301)
ADDITIONAL CONC REINF OF (2) #6 BARS x 6'-0", CTR ON CORNERS, NO SPLICES	'h' x 'w' INDICATES A HEIGHT (IN) x WIDTH (IN) BM PENETRATION CTR IN THE BM DEPTH, SEE DET (A2/S602). PROVIDE A MAT REINF IN THE SLAB OF #4 AT 12"oc EW, SEE DET (A2/S602) FOR EXTENT OF REINF OVER PENETRATION. PROVIDE ADDITIONAL HSA's BTWN PENETRATION EDGE AND MID-SPAN BM TO ATTAIN HSA's 6"oc MAX	(c=_")	REQD PRE-CAMBER AT MID-SPAN OF BMS, CAMBER TOLERANCE SHALL BE +1/4", -0"		CONCRETE SUSPENDED SLAB, SEE SCHED ON (S301)
DEPRESSED SLAB, SEE ARCH PLANS FOR EXACT LOCATION AND EL		T=C+xK	ROOF JST TOP CHORD SHALL BE DESIGNED FOR AN ADDITIONAL LOAD OF __KIPS IN TENSION AND COMPRESSION. LOADS ARE PROVIDED AT ULTIMATE STRENGTH LEVEL	[X"]	INDICATES THE DISTANCE THAT THE BEAM IS OFFSET FROM THE STANDARD T/STL
CONC WALL, SEE SCHED ON (S301)	SC-x STL COL, SEE SCHED ON (S304)	(SFRSC)	SEISMIC FORCE RESISTING SYSTEM COLLECTOR. SEE DETS ON SHEET (S405) FOR CONNECTIONS	L3	L3x3 1/4 BRACE, SEE (S400) SHEETS FOR ADDITIONAL INFORMATION
STL COL, SEE SCHED ON (S304)	CB-x CONC BM, SEE SCHED ON (S301)	CSS-X	CONCRETE SUSPENDED SLAB, SEE (A1/S301)	L4	L4x4x3/8 FRAME BRACING, SEE DETAILS ON (S404) AND (S406)
SFRSC CONNECTION, SEE (S400) SHEETS FOR DETAILS	RD ROOF DRAIN, SEE ARCH AND MECH FOR EXACT LOCATION. SEE DET (B3/ST01) FOR FRAMING	OWSJ (XXX/XXX)	OPEN WEB STEEL JOIST (TOTAL LOAD/ LIVE LOAD) IN plf	L5	L5x5x3/8 FRAME BRACING, SEE DETAILS ON SHEETS (S404) AND (S406)
				C10	C10x20 HORIZONTAL, SEE DETAILS ON SHEET (S406)

KEY PLAN

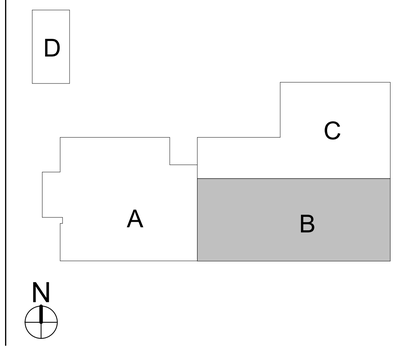

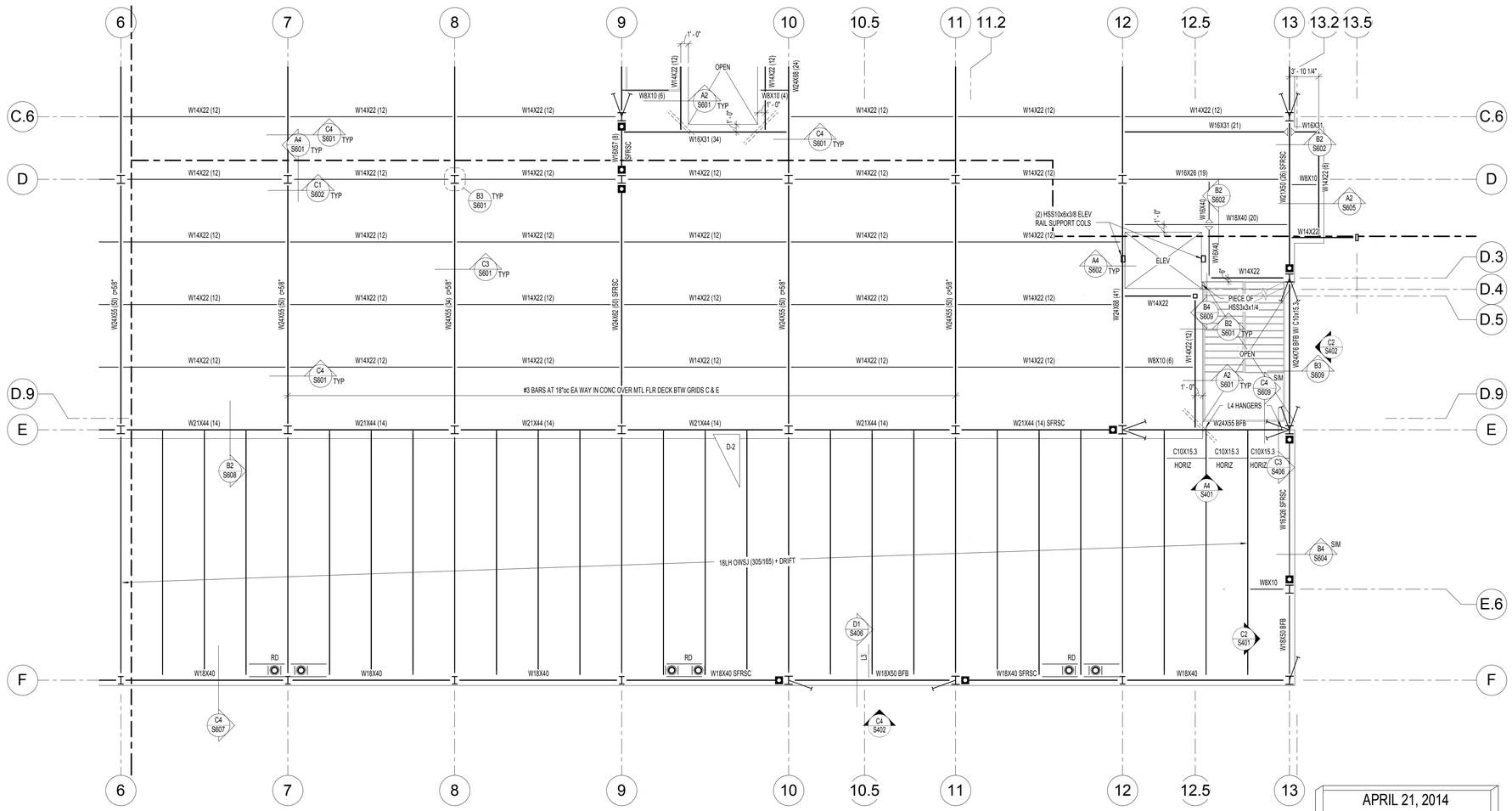

APRIL 21, 2014
BID SET

NOTE:
THESE STRUCTURAL DRAWINGS ARE BASED ON ARCHITECTURAL DRAWINGS DATED APRIL 10, 2014

DIMENSIONS AND ELEVATIONS, AS THEY RELATE TO THE BUILDING IN GENERAL, i.e. GRID TO GRID DIMENSIONS OR DECK BEARING ELEVATIONS, ARE SUPPLIED BY THE ARCHITECT. THEY ARE PROVIDED ON THE STRUCTURAL PLANS AND DETAILS FOR THE CONVENIENCE OF THE CONTRACTOR. VERIFY DIMENSIONS AND ELEVATIONS WITH ARCHITECTURAL DRAWINGS.

NORTH

A1 / S103B LEVEL 3 FLOOR FRAMING PLAN - AREA B
SCALE: 1/8" = 1'-0"

DUNN ASSOCIATES, INC
Consulting Structural Engineers
WWW.DUNN-SE.COM
PH: 801-575-8877 FAX: 801-575-8875

CRSA
649 E. South Temple
Salt Lake City, UT 84102
801.355.5915

MWL
11798 N. Lakeridge Pkwy.
Ashland, VA 23005
804-228-7473

State of Utah
Department of Administrative Services
Division of Facilities Construction & Management
4110 State Office Building
Salt Lake City, Utah 84114
Phone: (801) 538 - 3018
Fax: (801) 538 - 3267

DIVISION OF FACILITIES CONSTRUCTION AND MANAGEMENT
REVIEWED FOR CODE COMPLIANCE
SIGNATURE: Ernie Gelb
DATE: 08-05-2014

PROFESSIONAL STRUCTURAL ENGINEER
No. 295747
TAIT A. KETCHAM
04/21/2014
STATE OF UTAH

ARCHITECT-ENGINEER STAMP

Unified State Laboratory Module 2

4451 South 2700 West, Taylorsville, UT 84118

DFCM #:	13020300
Project #:	13062
DATE:	ISSUE TYPE:
APRIL 21, 2014	BID SET
CHECKED BY	TAK
DRAWN BY	SJS

LEVEL 3 FLOOR FRAMING PLAN - AREA B

S103B

VOLUME 1

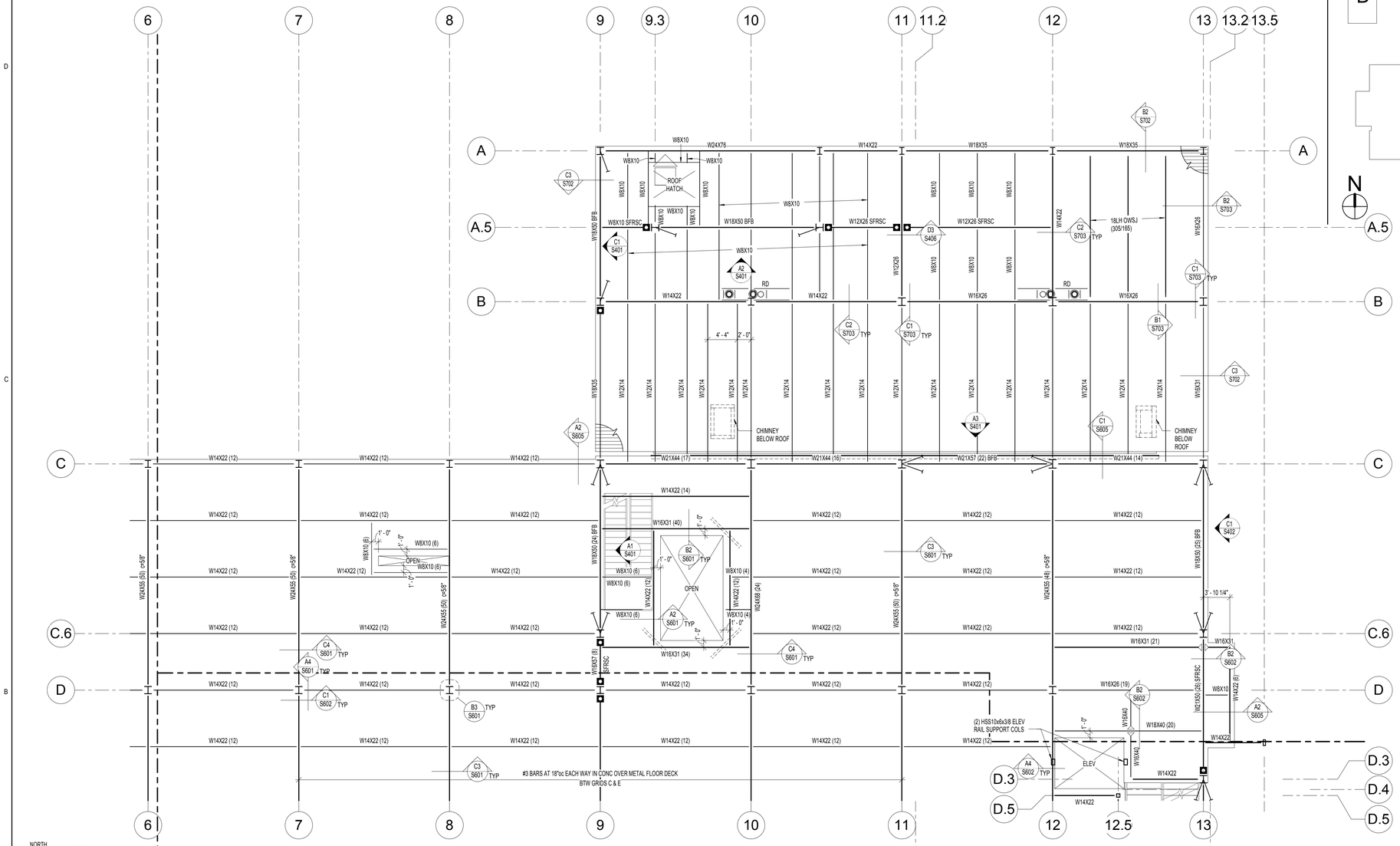

A1 LEVEL 3 FLOOR FRAMING PLAN - AREA C
S103C SCALE: 1/8" = 1'-0"

KEY PLAN

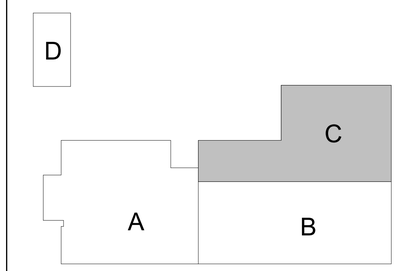

ROOF FRAMING PLAN NOTES:

1. VERIFY ROOF SLOPES, DRAINS, AND DECK BEARING ELEVATIONS WITH ARCHITECTURAL DRAWINGS. SEE ROOF FRAMING DETAILS ON SHEET (S701).
2. ALL JOISTS SHALL HAVE 5" DEEP BEARING ENDS. UNO.
3. ALL GIRDERS SHALL HAVE 7 1/2" DEEP BEARING ENDS. UNO.
4. ALL ROOF OPENINGS SHALL BE FRAMED AS INDICATED IN ROOF FRAMING DETAILS ON SHEET (S701).
5. SEE ROOF FRAMING DETAILS ON SHEET (S701) FOR CONCENTRATED LOADS LOCATED FURTHER THAN 6" FROM JOIST/GIRDER PANEL JOINT.
6. SEE ROOF FRAMING DETAILS ON SHEET (S701) FOR MECHANICAL UNITS HUNG BELOW JOISTS.
7. VERIFY SIZE, WEIGHT, AND LOCATION OF ALL ROOF TOP MECHANICAL UNITS WITH ARCHITECTURAL AND MECHANICAL DRAWINGS. SEE ROOF FRAMING DETAILS ON SHEET (S701) FOR STEEL FRAMES AT ALL ROOF TOP EQUIPMENT. COORDINATE OPENINGS WITH MECHANICAL, ELECTRICAL, AND GENERAL CONTRACTORS.
8. OPEN WEB STEEL JOISTS AND JOIST GIRDERS SHALL BE DESIGNATED BY THE MANUFACTURER TO SUPPORT THE MECHANICAL AND LATERAL LOADS SHOWN ON THE ROOF FRAMING PLANS IN ADDITION TO THE UNIFORM AND POINLOADS SHOWN.
9. WHERE SKYLIGHTS OR MECHANICAL UNITS INTERRUPT HORIZONTAL BRIDGING, PROVIDE CROSS BRIDGING AT JOIST SPACES ON EA SIDE. TYPICAL.
10. WHERE DIAGONAL BRIDGING CONFLICTS WITH MECHANICAL DUCTS, REMOVE DIAGONAL BRIDGING AND REPLACE WITH HORIZONTAL BRIDGING (AFTER ROOF DECK IS IN PLACE).
11. * - INDICATES THAT THESE JOISTS SHALL BE DESIGNED FOR AN ADLOAD OF 100# AT ANY TOP CHORD PANEL POINT. THIS LOAD IS TO BE ADDED TO THE GIRDER TOP CHORD LOAD. MULTIPLE *** ARE ADDITIVE.
12. JOIST DESIGNER SHALL DESIGN JOISTS AND SUPPLY ADDITIONAL BRIDGING AS REQUIRED FOR ___ PSF NET UPLIFT DUE TO WIND. THERE IS NO UPLIFT ON GIRDERS.
13. SEE SHEETS (S401) AND (S402) FOR MOMENT FRAME ELEVATIONS AND DETAILS ON SHEET (S701).
14. SEE ARCHITECTURAL PLANS FOR ALL STEEL COLUMN LOCATIONS (DIMENSIONS).
15. SPRINKLER DESIGNER SHALL COORDINATE THE SPRINKLER DESIGN WITH THE JOIST/GIRDER SHOP DRAWINGS.

FLOOR FRAMING PLAN NOTES:

1. VERIFY WALL FLOOR OPENINGS FOR MECHANICAL SHAFTS, STAIRS, ETC. WITH ARCHITECTURAL DRAWINGS.
2. SEE FLOOR FRAMING DETAILS ON SHEET (S601) FOR FRAMING AROUND MISCELLANEOUS OPENINGS.
3. SEE SHEETS (S401) AND (S402) FOR FRAME ELEVATIONS AND DETAILS.
4. SEE ARCHITECTURAL DRAWINGS FOR ALL DIMENSIONS TO STEEL COLUMNS AND SLAB EDGES.
5. SEE FOOTING AND FOUNDATION DETAILS ON SHEET (S501) FOR REINFORCING AROUND MISCELLANEOUS OPENINGS IN CONCRETE WALLS.
6. ALL FLOOR GIRDERS SHALL HAVE 7 1/2" ENDS. UNO.

SNOW DRIFT LOADING DIAGRAM

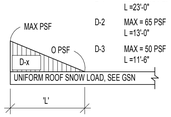

D-1	MAX = 115 PSF L =23'-0"
D-2	MAX = 65 PSF L =13'-0"
D-3	MAX = 50 PSF L =11'-6"

MARKS & SYMBOLS LEGEND

SECTION MARK SHEET NUMBER	CONC COL, SEE SCHED ON (S301)	CC-x	CONC COL, SEE SCHED ON (S301)		MAS WALL, SEE SCHED ON (S302)
FRAME EL MARK FRAME EL ON (S400's)	LATERAL FRAME MOMENT CONNECTIONS	CL-x	CONC LINTEL, SEE SCHED ON (S301)	MW-X	MAS WALL, SEE SCHED ON (S302)
	GRAVITY MOMENT CONNECTIONS	W_x_	COMPOSITE STL BMS, SEE GSN ON (S002)	CW-X	CONC WALL, SEE SCHED ON (S301)
CONC OVER MTL DECK, SEE GSN ON (S002)	DBL SHEAR CONNECTION, SEE SCHED ON (S303)	(x)	NUMBER OF HSA FOR SECTION OF COMPOSITE STL BM, SEE GSN ON (S002)		CONC WALL, SEE SCHED ON (S301)
ADDITIONAL CONC REINF OF (2) #6 BARS x 6'-0", CTR ON CORNERS, NO SPLICES	INDICATES A HEIGHT (IN) x WIDTH (IN) BM PENETRATION CTR IN THE BM DEPTH. SEE DET (A2/S402). PROVIDE A MAT REINF IN THE SLAB OF #4 AT 12"oc EW, SEE DET (A2/S602) FOR EXTENT OF REINF OVER PENETRATION. PROVIDE ADDITIONAL HSA's BTWN PENETRATION EDGE AND MID-SPAN BM TO ATTAIN HSA's 6"oc MAX	(c=_")	REQD PRE-CAMBER AT MID-SPAN OF BMS, CAMBER TOLERANCE SHALL BE +1/4", -0"		CONCRETE SUSPENDED SLAB, SEE SCHED ON (S301)
DEPRESSED SLAB, SEE ARCH PLANS FOR EXACT LOCATION AND EL	'h' x 'W'	T=C=nK	ROOF JST TOP CHORD SHALL BE DESIGNED FOR AN ADDITIONAL LOAD OF __KIPS IN TENSION AND COMPRESSION. LOADS ARE PROVIDED AT ULTIMATE STRENGTH LEVEL	[X"]	INDICATES THE DISTANCE THAT THE BEAM IS OFFSET FROM THE STANDARD T/STL
CONC WALL, SEE SCHED ON (S301)	SC-x	STL COL, SEE SCHED ON (S304)	(SFRSC) SEISMIC FORCE RESISTING SYSTEM COLLECTOR. SEE DETS ON SHEET (S405) FOR CONNECTIONS	L3	L3x3 1/4 BRACE, SEE (S400) SHEETS FOR ADDITIONAL INFORMATION
STL COL, SEE SCHED ON (S304)	CB-x	CONC BM, SEE SCHED ON (S301)	CSS-X CONCRETE SUSPENDED SLAB, SEE (A1/S301)	L4	L4x4x3/8 FRAME BRACING, SEE DETAILS ON (S404) AND (S406)
SFRSC CONNECTION, SEE (S400) SHEETS FOR DETAILS	RD	ROOF DRAIN, SEE ARCH AND MECH FOR EXACT LOCATION. SEE DET (B3/S701) FOR FRAMING	OWSJ (XXX/XXX) OPEN WEB STEEL JOIST (TOTAL LOAD/ LIVE LOAD) IN plf	L5	L5x3/8 FRAME BRACING, SEE DETAILS ON SHEETS (S404) AND (S406)
				C10	C10x20 HORIZONTAL, SEE DETAILS ON SHEET (S406)

APRIL 21, 2014
BID SET

NOTE:
THESE STRUCTURAL DRAWINGS ARE BASED ON ARCHITECTURAL DRAWINGS DATED APRIL 10, 2014

DIMENSIONS AND ELEVATIONS, AS THEY RELATE TO THE BUILDING IN GENERAL, i.e. GRID TO GRID DIMENSIONS OR DECK BEARING ELEVATIONS, ARE SUPPLIED BY THE ARCHITECT. THEY ARE PROVIDED ON THE STRUCTURAL PLANS AND DETAILS FOR THE CONVENIENCE OF THE CONTRACTOR. VERIFY DIMENSIONS AND ELEVATIONS WITH ARCHITECTURAL DRAWINGS.

DUNN ASSOCIATES, INC
Consulting Structural Engineers
WWW.DUNN-SE.COM
PH: 801-575-8677 FAX: 801-575-8875

CRSA
649 E. South Temple
Salt Lake City, UT 84102
801.355.5915

MWL
11798 N. Lakeridge Pkwy.
Ashland, VA 23005
804-228-7473

State of Utah
Department of Administrative Services
Division of Facilities Construction & Management
4110 State Office Building
Salt Lake City, Utah 84114
Phone: (801) 538 - 3018
Fax: (801) 538 - 3267

DIVISION OF FACILITIES CONSTRUCTION AND MANAGEMENT
REVIEWED FOR CODE COMPLIANCE
SIGNATURE: Ernie Gelle
DATE: 08-05-2014

PROFESSIONAL STRUCTURAL ENGINEER
No. 295747
TAIT A. KETCHAM
04/21/2014
STATE OF UTAH

ARCHITECT-ENGINEER STAMP

Unified State Laboratory Module 2

4451 South 2700 West, Taylorsville, UT 84118

DFCM #:	13020300
Project #:	13062
DATE:	ISSUE TYPE:
APRIL 21, 2014	BID SET
CHECKED BY	TAK
DRAWN BY	SJS

LEVEL 3 FLOOR FRAMING PLAN - AREA C

S103C

VOLUME 1

ROOF FRAMING PLAN NOTES:

1. VERIFY ROOF SLOPES, DRAINS, AND DECK BEARING ELEVATIONS WITH ARCHITECTURAL DRAWINGS. SEE ROOF FRAMING DETAILS ON SHEET (S701).
2. ALL JOISTS SHALL HAVE 5" DEEP BEARING ENDS. UNO.
3. ALL GIRDERS SHALL HAVE 7 1/2" DEEP BEARING ENDS. UNO.
4. ALL ROOF OPENINGS SHALL BE FRAMED AS INDICATED IROOF FRAMING DETAILS ON SHEET (S701).
5. SEE ROOF FRAMING DETAILS ON SHEET (S701) FOR CONCENTRATED LOADS LOCATED FURTHER THAN 6" FROM JOIST/GIRDER PANEL JOINT.
6. SEE ROOF FRAMING DETAILS ON SHEET (S701) FOR MECHANICAL UNITS HUNG BELOW JOISTS.
7. VERIFY SIZE, WEIGHT, AND LOCATION OF ALL ROOF TOP MECHANICAL UNITS WITH ARCHITECTURAL AND MECHANICAL DRAWINGS. SEE ROOF FRAMING DETAILS ON SHEET (S701) FOR STEEL FRAMES AT ALL ROOF TOP EQUIPMENT. COORDINATE OPENINGS WITH MECHANICAL, ELECTRICAL, AND GENERAL CONTRACTORS.
8. OPEN WEB STEEL JOISTS AND JOIST GIRDERS SHALL BE DESIGNATED BY THE MANUFACTURER TO SUPPORT THE MECHANICAL AND LATERAL LOADS SHOWN ON THE ROOF FRAMING PLANS IN ADDITION TO THE UNIFORM AND POINLOADS SHOWN.
9. WHERE SKYLIGHTS OR MECHANICAL UNITS INTERRUPT HORIZONTAL BRIDGING, PROVIDE CROSS BRIDGING AT JOIST SPACES ON EA SIDE. TYPICAL.
10. WHERE DIAGONAL BRIDGING CONFLICTS WITH MECHANICAL DUCTS, REMOVE DIAGONAL BRIDGING AND REPLACE WITH HORIZONTAL BRIDGING (AFTER ROOF DECK IS IN PLACE).
11. * - INDICATES THAT THESE JOISTS SHALL BE DESIGNED FOR AN ADLOAD OF 1000# AT ANY TOP CHORD PANEL POINT. THIS LOAD IS TO BE ADDED TO THE GIRDER TOP CHORD LOAD. MULTIPLE *** ARE ADDITIVE.
12. JOIST DESIGNER SHALL DESIGN JOISTS AND SUPPLY ADDITIONAL BRIDGING AS REQUIRED FOR ____ PSF NET UPLIFT DUE TO WIND. THERE IS NO UPLIFT ON GIRDERS.
13. SEE SHEETS (S401) AND (S402) FOR MOMENT FRAME ELEVATIONS AND DETAILS ON SHEET (S701).
14. SEE ARCHITECTURAL PLANS FOR ALL STEEL COLUMN LOCATIONS (DIMENSIONS).
15. SPRINKLER DESIGNER SHALL COORDINATE THE SPRINKLER DESIGN WITH THE JOIST/GIRDER SHOP DRAWINGS.

FLOOR FRAMING PLAN NOTES:

1. VERIFY WALL FLOOR OPENINGS FOR MECHANICAL SHAFTS, STAIRS, ETC. WITH ARCHITECTURAL DRAWINGS.
2. SEE FLOOR FRAMING DETAILS ON SHEET (S601) FOR FRAMING AROUND MISCELLANEOUS OPENINGS.
3. SEE SHEETS (S401) AND (S402) FOR FRAME ELEVATIONS AND DETAILS.
4. SEE ARCHITECTURAL DRAWINGS FOR ALL DIMENSIONS TO STEEL COLUMNS AND SLAB EDGES
5. SEE FOOTING AND FOUNDATION DETAILS ON SHEET (S501) FOR REINFORCING AROUND MISCELLANEOUS OPENINGS IN CONCRETE WALLS.
6. ALL FLOOR GIRDERS SHALL HAVE 7 1/2" ENDS. UNO.

SNOW DRIFT LOADING DIAGRAM

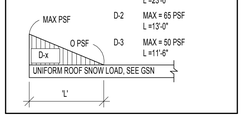

MARKS & SYMBOLS LEGEND

	SECTION MARK SHEET NUMBER		CONC COL, SEE SCHED ON (S301)	CC-x	CONC COL, SEE SCHED ON (S301)		MAS WALL, SEE SCHED ON (S302)
	FRAME EL MARK FRAME EL ON (S400's)		LATERAL FRAME MOMENT CONNECTIONS	CL-x	CONC LINTEL, SEE SCHED ON (S301)	MW-X	MAS WALL, SEE SCHED ON (S302)
			GRAVITY MOMENT CONNECTIONS	W_x_	COMPOSITE STL BMS, SEE GSN ON (S002)	CW-X	CONC WALL, SEE SCHED ON (S301)
	CONC OVER MTL DECK, SEE GSN ON (S002)		DBL SHEAR CONNECTION, SEE SCHED ON (S303)	(x)	NUMBER OF HSA FOR SECTION OF COMPOSITE STL BM, SEE GSN ON (S002)		CONC WALL, SEE SCHED ON (S301)
	ADDITIONAL CONC REINF OF (2) #6 BARS x 6'-0", CTR ON CORNERS, NO SPLICES	'h' x 'w'	INDICATES A HEIGHT (IN) x WIDTH (IN) BM PENETRATION CTR IN THE BM DEPTH, SEE DET (A2/S602), PROVIDE A MAT REINF IN THE SLAB OF #4 AT 12"oc EW, SEE DET (A2/S602) FOR EXTENT OF REINF OVER PENETRATION. PROVIDE ADDITIONAL HSA's BTWN PENETRATION EDGE AND MID-SPAN BM TO ATTAIN HSA's 6"oc MAX	(c=_")	REQD PRE-CAMBER AT MID-SPAN OF BMS, CAMBER TOLERANCE SHALL BE +1/4" ,-0"		CONCRETE SUSPENDED SLAB, SEE SCHED ON (S301)
	DEPRESSED SLAB, SEE ARCH PLANS FOR EXACT LOCATION AND EL			T=C=xK	ROOF JST TOP CHORD SHALL BE DESIGNED FOR AN ADDITIONAL LOAD OF __KIPS IN TENSION AND COMPRESSION. LOADS ARE PROVIDED AT ULTIMATE STRENGTH LEVEL	[X"]	INDICATES THE DISTANCE THAT THE BEAM IS OFFSET FROM THE STANDARD T/STL
	CONC WALL, SEE SCHED ON (S301)	SC-x	STL COL, SEE SCHED ON (S304)	(SFRSC)	SEISMIC FORCE RESISTING SYSTEM COLLECTOR. SEE DETS ON SHEET (S405) FOR CONNECTIONS	L3	L3x3 1/4 BRACE, SEE (S400) SHEETS FOR ADDITIONAL INFORMATION
	STL COL, SEE SCHED ON (S304)	CB-x	CONC BM, SEE SCHED ON (S301)	CSS-X	CONCRETE SUSPENDED SLAB, SEE (A1/S301)	L4	L4x4x3/8 FRAME BRACING, SEE DETAILS ON (S404) AND (S406)
	SFRSC CONNECTION, SEE (S400) SHEETS FOR DETAILS	RD	ROOF DRAIN, SEE ARCH AND MECH FOR EXACT LOCATION. SEE DET (B3/S701) FOR FRAMING	OWSJ (XXX/XXX)	OPEN WEB STEEL JOIST (TOTAL LOAD/ LIVE LOAD) IN plf	L5	L5x5x3/8 FRAME BRACING, SEE DETAILS ON SHEETS (S404) AND (S406)
						C10	C10x20 HORIZONTAL. SEE DETAILS ON SHEET (S406)

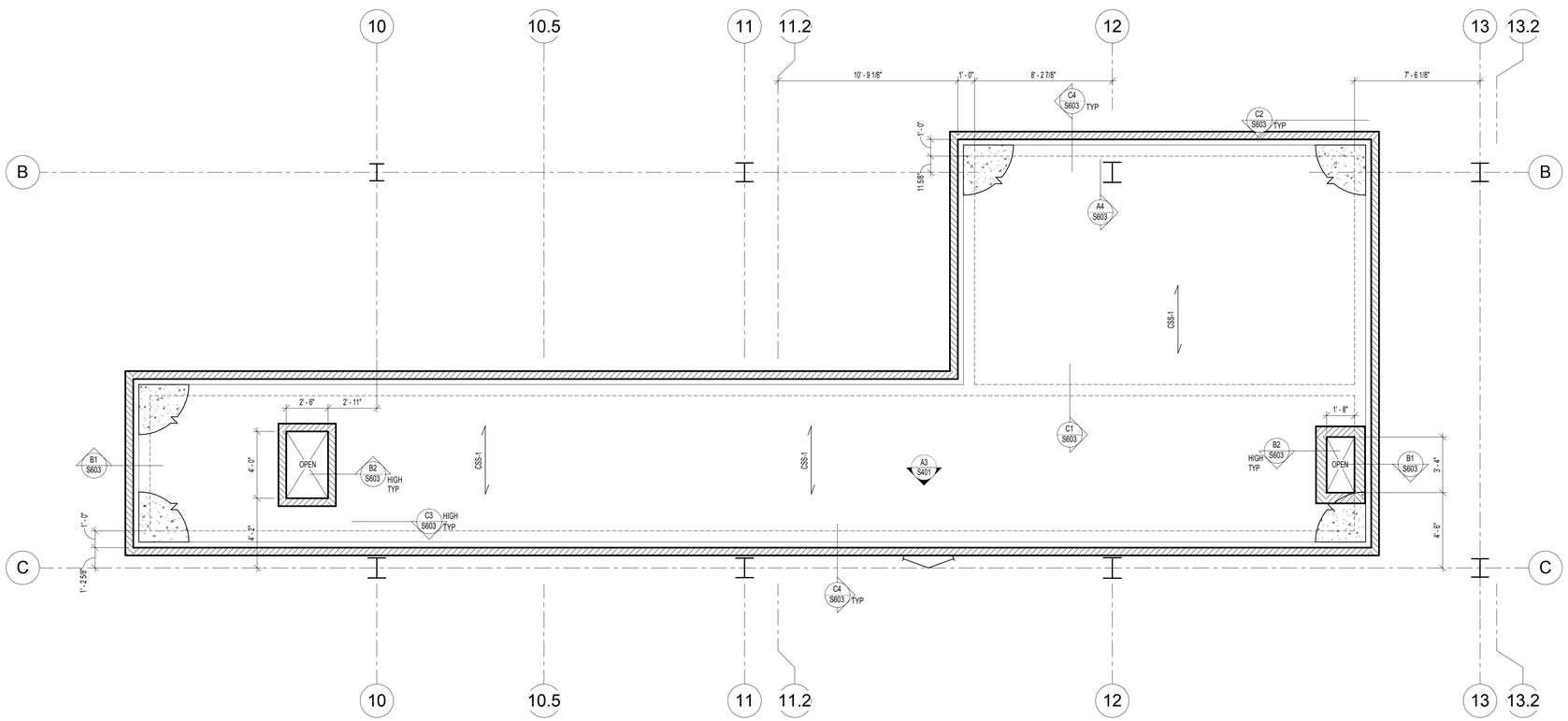

NORTH

A1 S103D GUN RANGE LID
SCALE: 1/4" = 1'-0"

APRIL 21, 2014
BID SET

NOTE:
THESE STRUCTURAL DRAWINGS ARE BASED ON ARCHITECTURAL DRAWINGS DATED APRIL 10, 2014

DIMENSIONS AND ELEVATIONS, AS THEY RELATE TO THE BUILDING IN GENERAL, i.e. GRID TO GRID DIMENSIONS OR DECK BEARING ELEVATIONS, ARE SUPPLIED BY THE ARCHITECT. THEY ARE PROVIDED ON THE STRUCTURAL PLANS AND DETAILS FOR THE CONVENIENCE OF THE CONTRACTOR. VERIFY DIMENSIONS AND ELEVATIONS WITH ARCHITECTURAL DRAWINGS.

DUNN ASSOCIATES, INC
Consulting Structural Engineers
WWW.DUNN-SE.COM
PH: 801-575-8877 FAX: 801-575-8875

CRSA
649 E. South Temple
Salt Lake City, UT 84102
801.355.5915

MWL
11798 N. Lakeridge Pkwy.
Ashland, VA 23005
804-228-7473

State of Utah
Department of Administrative Services
Division of Facilities Construction & Management
4110 State Office Building
Salt Lake City, Utah 84114
Phone: (801) 538 - 3018
Fax: (801) 538 - 3267

DIVISION OF FACILITIES CONSTRUCTION AND MANAGEMENT
REVIEWED FOR CODE COMPLIANCE
SIGNATURE: Ernie Gelfe
DATE: 08-05-2014

PROFESSIONAL STRUCTURAL ENGINEER
No. 295747
TAIT A. KETCHAM
04/21/2014
STATE OF UTAH

ARCHITECT-ENGINEER STAMP

Unified State Laboratory Module 2

4451 South 2700 West, Taylorsville, UT 84118

DFCM #:	13020300
Project #:	13062

DATE:	ISSUE TYPE:
APRIL 21, 2014	BID SET
CHECKED BY	TAK
DRAWN BY	SJS

GUN RANGE LID PLAN

S103D

VOLUME 1

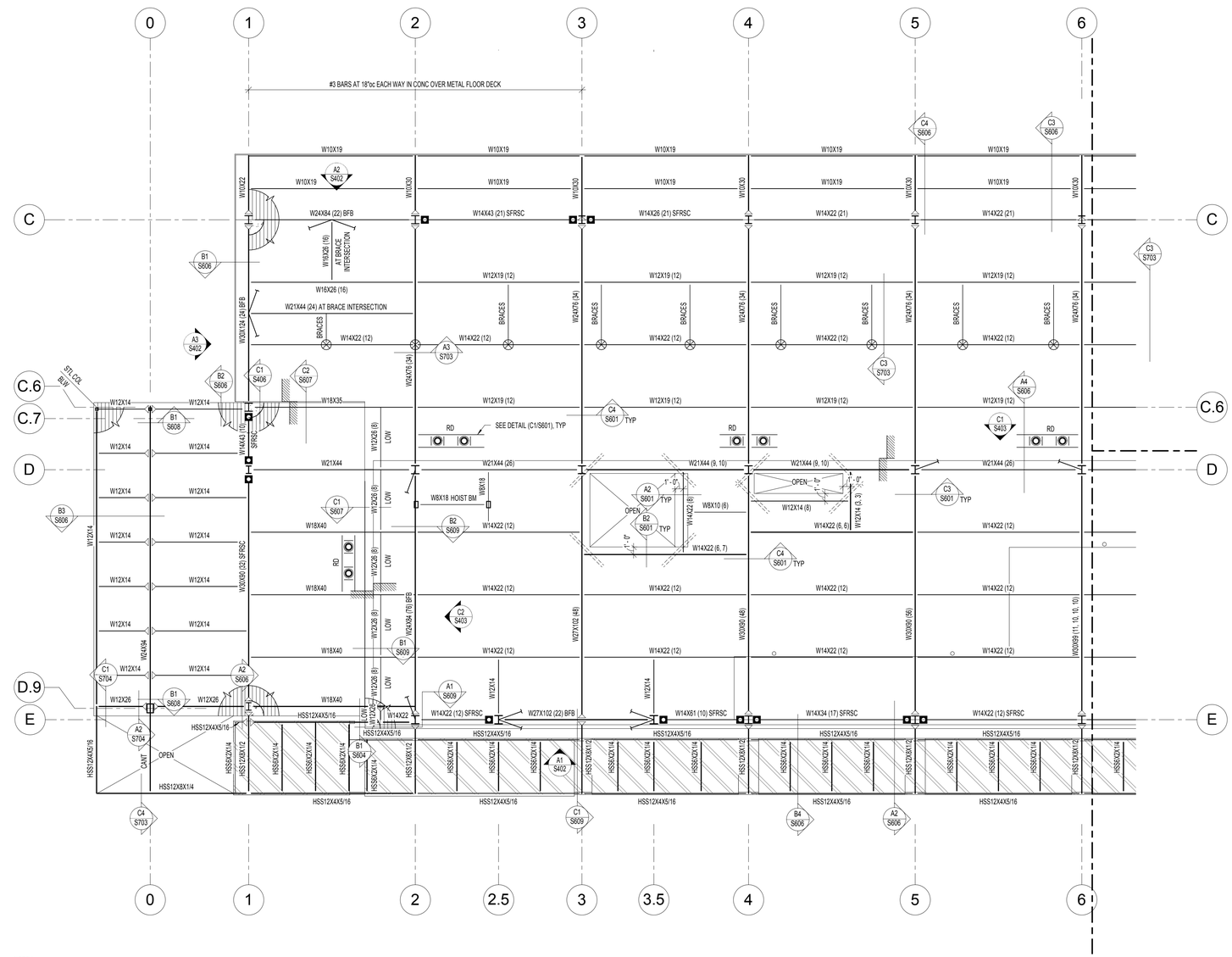

NORTH

B1 S104A PENTHOUSE FLOOR/ ROOF FRAMING PLAN - AREA A

SCALE: 1/8" = 1'-0"

KEY PLAN

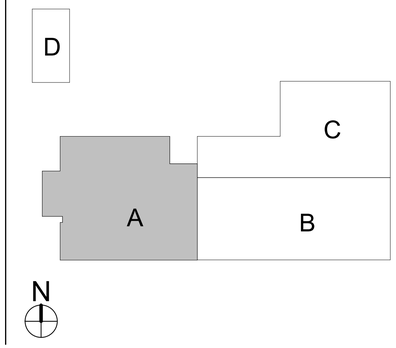

ROOF FRAMING PLAN NOTES:

1. VERIFY ROOF SLOPES, DRAINS, AND DECK BEARING ELEVATIONS WITH ARCHITECTURAL DRAWINGS. SEE ROOF FRAMING DETAILS ON SHEET (S701).
2. ALL JOISTS SHALL HAVE 5" DEEP BEARING ENDS. UNO.
3. ALL GIRDERS SHALL HAVE 7 1/2" DEEP BEARING ENDS. UNO.
4. ALL ROOF OPENINGS SHALL BE FRAMED AS INDICATED IN ROOF FRAMING DETAILS ON SHEET (S701).
5. SEE ROOF FRAMING DETAILS ON SHEET (S701) FOR CONCENTRATED LOADS LOCATED FURTHER THAN 6" FROM JOIST/GIRDER PANEL JOINT.
6. SEE ROOF FRAMING DETAILS ON SHEET (S701) FOR MECHANICAL UNITS HUNG BELOW JOISTS.
7. VERIFY SIZE, WEIGHT, AND LOCATION OF ALL ROOF TOP MECHANICAL UNITS WITH ARCHITECTURAL AND MECHANICAL DRAWINGS. SEE ROOF FRAMING DETAILS ON SHEET (S701) FOR STEEL FRAMES AT ALL ROOF TOP EQUIPMENT. COORDINATE OPENINGS WITH MECHANICAL, ELECTRICAL, AND GENERAL CONTRACTORS.
8. OPEN WEB STEEL JOISTS AND JOIST GIRDERS SHALL BE DESIGNATED BY THE MANUFACTURER TO SUPPORT THE MECHANICAL AND LATERAL LOADS SHOWN ON THE ROOF FRAMING PLANS IN ADDITION TO THE UNIFORM AND POINT LOADS SHOWN.
9. WHERE SKYLIGHTS OR MECHANICAL UNITS INTERRUPT HORIZONTAL BRIDGING, PROVIDE CROSS BRIDGING AT JOIST SPACES ON EA SIDE. TYPICAL.
10. WHERE DIAGONAL BRIDGING CONFLICTS WITH MECHANICAL DUCTS, REMOVE DIAGONAL BRIDGING AND REPLACE WITH HORIZONTAL BRIDGING (AFTER ROOF DECK IS IN PLACE).
11. " - INDICATES THAT THESE JOISTS SHALL BE DESIGNED FOR AN ADLOAD OF 100# AT ANY TOP CHORD PANEL POINT. THIS LOAD IS TO BE ADDED TO THE GIRDER TOP CHORD LOAD. MULTIPLE "" ARE ADDITIVE.
12. JOIST DESIGNER SHALL DESIGN JOISTS AND SUPPLY ADDITIONAL BRIDGING AS REQUIRED FOR ___ PSF NET UPLIFT DUE TO WIND. THERE IS NO UPLIFT ON GIRDERS.
13. SEE SHEETS (S401) AND (S402) FOR MOMENT FRAME ELEVATIONS AND DETAILS ON SHEET (S701).
14. SEE ARCHITECTURAL PLANS FOR ALL STEEL COLUMN LOCATIONS (DIMENSIONS).
15. SPRINKLER DESIGNER SHALL COORDINATE THE SPRINKLER DESIGN WITH THE JOIST/GIRDER SHOP DRAWINGS.

MARKS AND SYMBOLS LEGEND

	SECTION MARK SHEET NUMBER
	FRAME EL MARK FRAME EL ON (S400's)
	MTL ROOF DECK, SEE GSN ON (S101)
	BRG WALL BLW
or	STL COL, SEE SCHED ON (S304)
	LATERAL FRAME MOMENT CONNECTIONS
	GRAVITY MOMENT CONNECTIONS
	DOUBLE SHEAR CONNECTION, SEE SCHED ON (S303)
	JST TOP CHORD TIE, SEE ROOF FRAMING DETS ON (S701)
	HORIZ BRIDG
	X-BRIDG
	HORIZ BRDG REQD FOR UPLIFT, SEE STL JST SUPPLIER FOR REQUIREMENTS
ML-x	MAS LINTEL, SEE SCHED ON (S301)
T=CnxK	ROOF JST TOP CHORD SHALL BE DESIGNED FOR AN ADDITIONAL LOAD OF __KIPS IN TENSION AND COMPRESSION. LOADS ARE PROVIDED AT ULTIMATE STRENGTH LEVEL
RD	ROOF DRAIN. SEE ARCH AND MECH FOR EXACT LOCATION. SEE DET (B3/S701) FOR FRAMING
(SFRSC)	SEISMIC FORCE RESISTING SYSTEM COLLECTOR. SEE DETS ON SHEET (S405) FOR CONNECTIONS
L3	L3x3 1/4 BRACE. SEE (S400) SHEETS FOR ADDITIONAL INFORMATION
L4	L4x4x3/8 FRAME BRACING, SEE DETAILS ON (S404) AND (S406)
L5	L5x5x3/8 FRAME BRACING, SEE DETAILS ON SHEETS (S404) AND (S406)
	ROOF ANCHOR, SEE DETAIL (C3/ST03). SEE ARCH DWG FOR LOCATION
	SFRSC CONNECTION, SEE (S400) SHEETS FOR DETAILS
	INDICATES PERFORATED ROOF DECK, SEE ARCH

SNOW DRIFT LOADING DIAGRAM

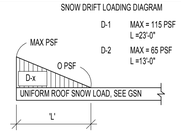

D-1 MAX = 115 PSF L =23'-0"

D-2 MAX = 65 PSF L =13'-0"

APRIL 21, 2014
BID SET

NOTE:
THESE STRUCTURAL DRAWINGS ARE BASED ON ARCHITECTURAL DRAWINGS DATED APRIL 10, 2014

DIMENSIONS AND ELEVATIONS, AS THEY RELATE TO THE BUILDING IN GENERAL, i.e. GRID TO GRID DIMENSIONS OR DECK BEARING ELEVATIONS, ARE SUPPLIED BY THE ARCHITECT. THEY ARE PROVIDED ON THE STRUCTURAL PLANS AND DETAILS FOR THE CONVENIENCE OF THE CONTRACTOR. VERIFY DIMENSIONS AND ELEVATIONS WITH ARCHITECTURAL DRAWINGS.

DUNN ASSOCIATES, INC
Consulting Structural Engineers
WWW.DUNN-SE.COM
PH: 801-575-8877 FAX: 801-575-8875

CRSA
649 E. South Temple
Salt Lake City, UT 84102
801.355.5915

MWL
11798 N. Lakeridge Pkwy.
Ashland, VA 23005
804-228-7473

State of Utah
Department of Administrative Services
Division of Facilities Construction & Management
4110 State Office Building
Salt Lake City, Utah 84114
Phone: (801) 538 - 3018
Fax: (801) 538 - 3267

DIVISION OF FACILITIES CONSTRUCTION AND MANAGEMENT
REVIEWED FOR CODE COMPLIANCE
SIGNATURE: Ernie Gelb
DATE: 08-05-2014

PROFESSIONAL STRUCTURAL ENGINEER
No. 295747
TAIT A. KETCHAM
04/21/2014
STATE OF UTAH

ARCHITECT-ENGINEER STAMP

Unified State Laboratory Module 2

4451 South 2700 West, Taylorsville, UT 84118

DFCM #:	13020300
Project #:	13062
DATE:	ISSUE TYPE:
APRIL 21, 2014	BID SET
CHECKED BY	TAK
DRAWN BY	SJS

PENTHOUSE FLOOR/ ROOF FRAMING PLAN - AREA A

S104A

VOLUME 1

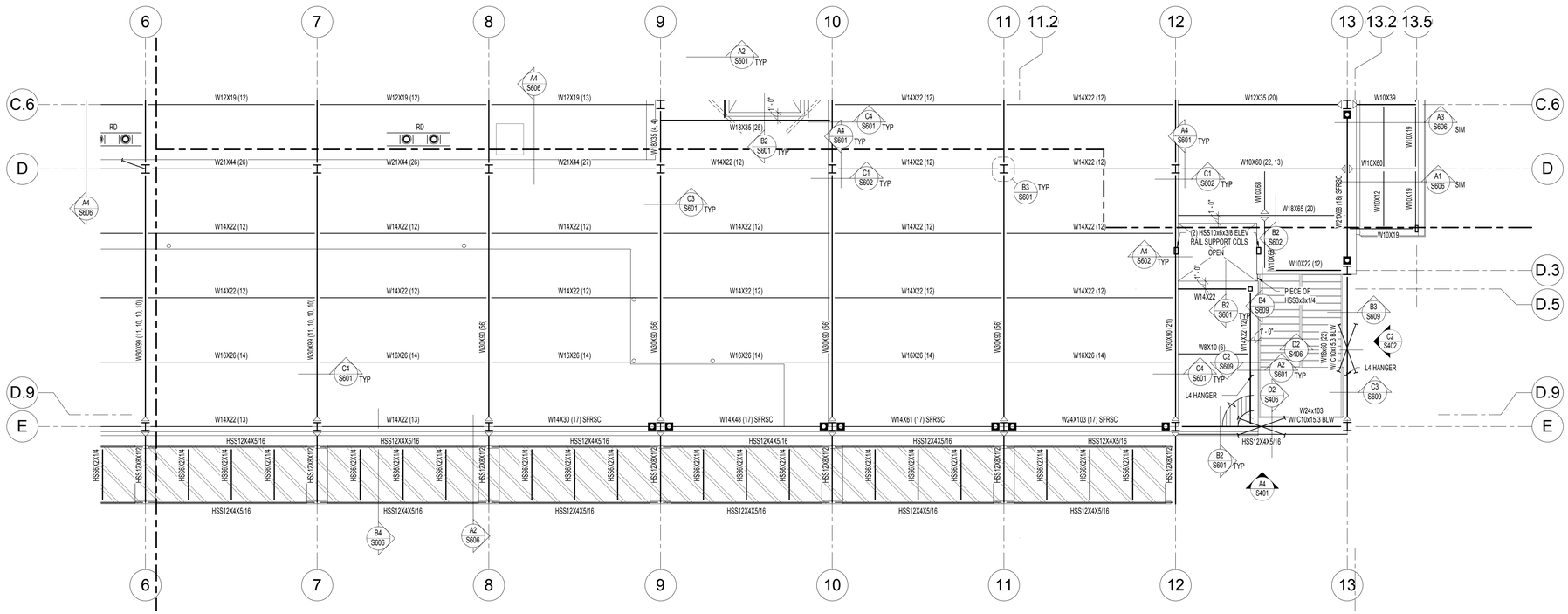

NORTH

B1 / S104B PENTHOUSE FLOOR/ ROOF FRAMING PLAN - AREA B

SCALE: 1/8" = 1'-0"

ROOF FRAMING PLAN NOTES:

1. VERIFY ROOF SLOPES, DRAINS, AND DECK BEARING ELEVATIONS WITH ARCHITECTURAL DRAWINGS. SEE ROOF FRAMING DETAILS ON SHEET (S701).
2. ALL JOISTS SHALL BE FLUSH FRAMED. UNO.
3. ALL ROOF OPENINGS SHALL BE FRAMED AS INDICATED IRROOF FRAMING DETAILS ON SHEET (S701).
4. SEE ROOF FRAMING DETAILS ON SHEET (S701) FORCONCENTRATED LOADS LOCATED FURTHER THAN 6" FROM JOIST/GIRDER PANEL JOINT.
5. SEE ROOF FRAMING DETAILS ON SHEET (S701) FORMECHANICAL UNITS HUNG BELOW JOISTS.
6. VERIFY SIZE, WEIGHT, AND LOCATION OF ALL ROOF TOP MECHANICAL UNITS WITH ARCHITECTURAL AND MECHANICAL DRAWINGS. SEE ROOF FRAMING DETAILS ON SHEET (S701) FOR STEEL FRAMES AT ALL ROOF TOP EQUIPMENT. COORDINATE OPENINGS WITH MECHANICAL, ELECTRICAL, AND GENERAL CONTRACTORS.
7. OPEN WEB STEEL JOISTS AND JOIST GIRDERS SHALL BE DESIGNATED BY THE MANUFACTURER TO SUPPORT THE MECHANICAL AND LATERAL LOADS SHOWN ON THE ROOFFRAMING PLANS IN ADDITION TO THE UNIFORM AND POINT LOADS SHOWN.
8. WHERE SKYLIGHTS OR MECHANICAL UNITS INTERRUPT HORIZONTAL BRIDGING, PROVIDE CROSS BRIDGING AT JOIST SPACES ON EA SIDE. TYPICAL.
9. WHERE DIAGONAL BRIDGING CONFLICTS WITH MECHANICAL DUCTS, REMOVE DIAGONAL BRIDGING AND REPLACE WITH HORIZONTAL BRIDGING (AFTER ROOF DECK IS IN PLACE).
10. * - INDICATES THAT THESE JOISTS SHALL BE DESIGNED FOR AN ADLOAD OF 1000# AT ANY TOP CHORD PANEL POINT. THIS LOAD IS TO BE ADDED TO THE GIRDER TOP CHORD LOAD. MULTIPLE "*" ARE ADDITIVE.
11. JOIST DESIGNER SHALL DESIGN JOISTS AND SUPPLY ADDITIONAL BRIDGING AS REQUIRED FOR 8 PSF NET UPLIFT DITO WIND. THERE IS NO UPLIFT ON GIRDERS.
12. SEE SHEETS (S401) AND (S402) FOR FRAME ELEVATIONS.
13. SEE ARCHITECTURAL PLANS FOR ALL STEEL COLUMN LOCATIONS (DIMENSIONS).
14. SPRINKLER DESIGNER SHALL COORDINATE THE SPRINKLER DESIGN WITH THE JOIST/GIRDER SHOP DRAWINGS.

MARKS AND SYMBOLS LEGEND

- SECTION MARK / SHEET NUMBER
- FRAME EL MARK FRAME / EL ON (S400's)
- MTL ROOF DECK, SEE GSN ON (S101)
- BRG WALL BLW
- STL COL, SEE SCHED ON (S304)
- LATERAL FRAME MOMENT CONNECTIONS
- GRAVITY MOMENT CONNECTIONS
- SFRSC CONNECTION, SEE (S400) SHEETS FOR DETAILS
- DOUBLE SHEAR CONNECTION, SEE SCHED ON (S303)
- ML-x — MAS LINTEL, SEE SCHED ON (S301)
- T=C=xK — ROOF JST TOP CHORD SHALL BE DESIGNED FOR AN ADDITIONAL LOAD OF _ KIPS IN TENSION AND COMPRESSION. LOADS ARE PROVIDED AT ULTIMATE STRENGTH LEVEL
- RD — ROOF DRAIN, SEE ARCH AND MECH FOR EXACT LOCATION. SEE DET (B3/S701) FOR FRAMING
- (SFRSC) — SEISMIC FORCE RESISTING SYSTEM COLLECTOR. SEE DETS ON SHEET (S405) FOR CONNECTIONS
- L3 — L3x3 1/4 BRACE, SEE (S400) SHEETS FOR ADDITIONAL INFORMATION
- L4 — L4x4x3/8 FRAME BRACING, SEE DETAILS ON (S404) AND (S406)
- L5 — L5x5x3/8 FRAME BRACING, SEE DETAILS ON SHEETS (S404) AND (S406)
- ROOF ANCHOR, SEE DETAIL (C3/S703). SEE ARCH DWG FOR LOCATION
- OWSJ (XXX/XXX) — OPEN WEB STEEL JOIST (TOTAL LOAD/ LIVE LOAD)
- INDICATES PERFORATED ROOF DECK, SEE ARCH

SNOW DRIFT LOADING DIAGRAM

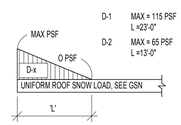

D-1 MAX = 115 PSF L =23'-0"

D-2 MAX = 65 PSF L =13'-0"

APRIL 21, 2014
BID SET

NOTE:
THESE STRUCTURAL DRAWINGS ARE BASED ON ARCHITECTURAL DRAWINGS DATED APRIL 10, 2014

DIMENSIONS AND ELEVATIONS, AS THEY RELATE TO THE BUILDING IN GENERAL, i.e. GRID TO GRID DIMENSIONS OR DECK BEARING ELEVATIONS, ARE SUPPLIED BY THE ARCHITECT. THEY ARE PROVIDED ON THE STRUCTURAL PLANS AND DETAILS FOR THE CONVENIENCE OF THE CONTRACTOR. VERIFY DIMENSIONS AND ELEVATIONS WITH ARCHITECTURAL DRAWINGS.

DUNN ASSOCIATES, INC
Consulting Structural Engineers
WWW.DUNN-SE.COM
PH: 801-575-8877 FAX: 801-575-8875

KEY PLAN

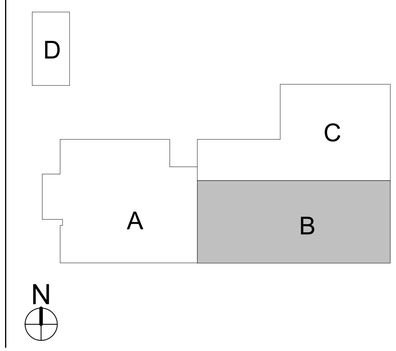

CRSA
649 E. South Temple
Salt Lake City, UT 84102
801.355.5915

MWL
11798 N. Lakeridge Pkwy.
Ashland, VA 23005
804-228-7473

State of Utah
Department of Administrative Services
Division of Facilities Construction & Management
4110 State Office Building
Salt Lake City, Utah 84114
Phone: (801) 538 - 3018
Fax: (801) 538 - 3267

DIVISION OF FACILITIES CONSTRUCTION AND MANAGEMENT
REVIEWED FOR CODE COMPLIANCE
SIGNATURE: Eric Cafe
DATE: 08-05-2014

PROFESSIONAL STRUCTURAL ENGINEER
No. 295747
TAIT A. KETCHAM
04/21/2014
STATE OF UTAH

ARCHITECT-ENGINEER STAMP

Unified State Laboratory Module 2

4451 South 2700 West, Taylorsville, UT 84118

DFCM #:	13020300
Project #:	13062
DATE:	ISSUE TYPE:
APRIL 21, 2014	BID SET
CHECKED BY	TAK
DRAWN BY	SJS

PENTHOUSE FLOOR/ ROOF FRAMING PLAN - AREA B

S104B

VOLUME 1

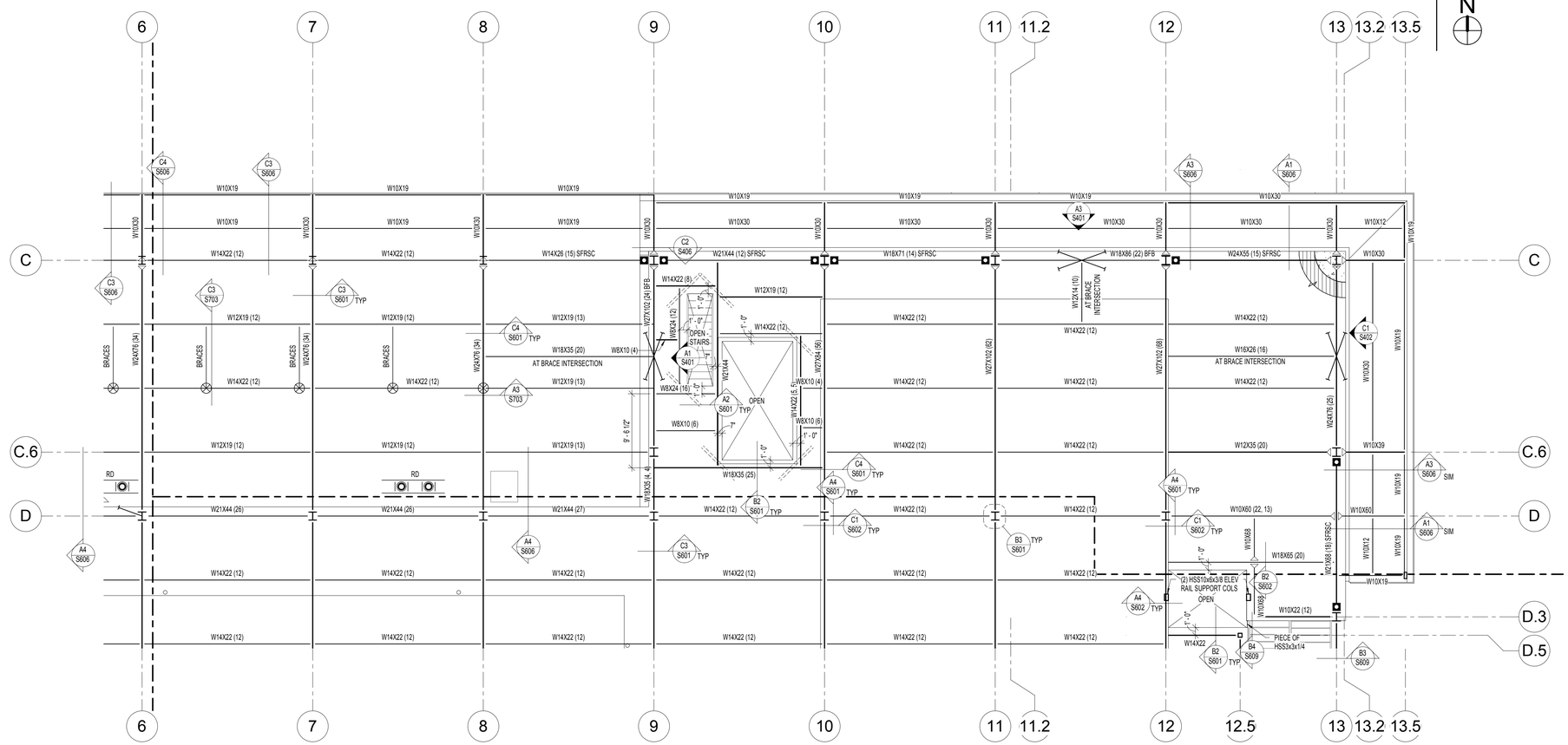

B1 PENTHOUSE FLOOR/ ROOF FRAMING PLAN - AREA C
S104C SCALE: 1/8" = 1'-0"

ROOF FRAMING PLAN NOTES:

1. VERIFY ROOF SLOPES, DRAINS, AND DECK BEARING ELEVATIONS WITH ARCHITECTURAL DRAWINGS. SEE ROOF FRAMING DETAILS ON SHEET (S701).
2. ALL JOISTS SHALL BE FLUSH FRAMED. UNO.
3. ALL ROOF OPENINGS SHALL BE FRAMED AS INDICATED IRROOF FRAMING DETAILS ON SHEET (S701).
4. SEE ROOF FRAMING DETAILS ON SHEET (S701) FORCONCENTRATED LOADS LOCATED FURTHER THAN 6" FROM JOIST/GIRDER PANEL JOINT.
5. SEE ROOF FRAMING DETAILS ON SHEET (S701) FORMECHANICAL UNITS HUNG BELOW JOISTS.
6. VERIFY SIZE, WEIGHT, AND LOCATION OF ALL ROOF TOP MECHANICAL UNITS WITH ARCHITECTURAL AND MECHANICAL DRAWINGS. SEE ROOF FRAMING DETAILS ON SHEET (S701) FOR STEEL FRAMES AT ALL ROOF TOP EQUIPMENT. COORDINATE OPENINGS WITH MECHANICAL, ELECTRICAL, AND GENERAL CONTRACTORS.
7. OPEN WEB STEEL JOISTS AND JOIST GIRDERS SHALL BE DESIGNATED BY THE MANUFACTURER TO SUPPORT THE MECHANICAL AND LATERAL LOADS SHOWN ON THE ROOFFRAMING PLANS IN ADDITION TO THE UNIFORM AND POINT LOADS SHOWN.
8. WHERE SKYLIGHTS OR MECHANICAL UNITS INTERRUPT HORIZONTAL BRIDGING, PROVIDE CROSS BRIDGING AT JOIST SPACES ON EA SIDE. TYPICAL.
9. WHERE DIAGONAL BRIDGING CONFLICTS WITH MECHANICAL DUCTS, REMOVE DIAGONAL BRIDGING AND REPLACE WITH HORIZONTAL BRIDGING (AFTER ROOF DECK IS IN PLACE).
10. * - INDICATES THAT THESE JOISTS SHALL BE DESIGNED FOR AN ADLOAD OF 1000# AT ANY TOP CHORD PANEL POINT. THIS LOAD IS TO BE ADDED TO THE GIRDER TOP CHORD LOAD. MULTIPLE "*" ARE ADDITIVE.
11. JOIST DESIGNER SHALL DESIGN JOISTS AND SUPPLY ADDITIONAL BRIDGING AS REQUIRED FOR 8 PSF NET UPLIFT DITO WIND. THERE IS NO UPLIFT ON GIRDERS.
12. SEE SHEETS (S401) AND (S402) FOR FRAME ELEVATIONS.
13. SEE ARCHITECTURAL PLANS FOR ALL STEEL COLUMN LOCATIONS (DIMENSIONS).
14. SPRINKLER DESIGNER SHALL COORDINATE THE SPRINKLER DESIGN WITH THE JOIST/GIRDER SHOP DRAWINGS.

MARKS AND SYMBOLS LEGEND

- SECTION MARK / SHEET NUMBER
- FRAME EL MARK FRAME / EL ON (S400's)
- MTL ROOF DECK, SEE GSN ON (S101)
- BRG WALL BLW
- STL COL, SEE SCHED ON (S304)
- LATERAL FRAME MOMENT CONNECTIONS
- GRAVITY MOMENT CONNECTIONS
- SFRSC CONNECTION, SEE (S400) SHEETS FOR DETAILS
- DOUBLE SHEAR CONNECTION, SEE SCHED ON (S303)
- ML-x — MAS LINTEL. SEE SCHED ON (S301)
- T=C=nK — ROOF JST TOP CHORD SHALL BE DESIGNED FOR AN ADDITIONAL LOAD OF __ KIPS IN TENSION AND COMPRESSION. LOADS ARE PROVIDED AT ULTIMATE STRENGTH LEVEL
- RD — ROOF DRAIN. SEE ARCH AND MECH FOR EXACT LOCATION. SEE DET (B3/S701) FOR FRAMING
- (SFRSC) — SEISMIC FORCE RESISTING SYSTEM COLLECTOR. SEE DETS ON SHEET (S405) FOR CONNECTIONS
- L3 — L3x3 1/4 BRACE, SEE (S400) SHEETS FOR ADDITIONAL INFORMATION
- L4 — L4x4x3/8 FRAME BRACING, SEE DETAILS ON (S404) AND (S406)
- L5 — L5x5x3/8 FRAME BRACING, SEE DETAILS ON SHEETS (S404) AND (S406)
- ROOF ANCHOR, SEE DETAIL (C3/S703). SEE ARCH DWG FOR LOCATION
- OWSJ (XXX/XXX) — OPEN WEB STEEL JOIST (TOTAL LOAD/ LIVE LOAD)
- INDICATES PERFORATED ROOF DECK, SEE ARCH

SNOW DRIFT LOADING DIAGRAM

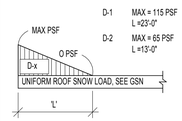

D-1 MAX = 115 PSF L =23'-0"
D-2 MAX = 65 PSF L =13'-0"

APRIL 21, 2014
BID SET

NOTE:
THESE STRUCTURAL DRAWINGS ARE BASED ON ARCHITECTURAL DRAWINGS DATED APRIL 10, 2014

DIMENSIONS AND ELEVATIONS, AS THEY RELATE TO THE BUILDING IN GENERAL, i.e. GRID TO GRID DIMENSIONS OR DECK BEARING ELEVATIONS, ARE SUPPLIED BY THE ARCHITECT. THEY ARE PROVIDED ON THE STRUCTURAL PLANS AND DETAILS FOR THE CONVENIENCE OF THE CONTRACTOR. VERIFY DIMENSIONS AND ELEVATIONS WITH ARCHITECTURAL DRAWINGS.

DUNN ASSOCIATES, INC
Consulting Structural Engineers
WWW.DUNN-SE.COM
PH: 801-575-8877 FAX: 801-575-8875

KEY PLAN

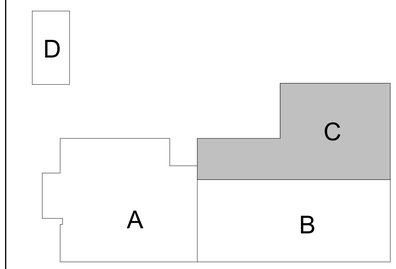

CRSA
649 E. South Temple
Salt Lake City, UT 84102
801.355.5915

MWL
11798 N. Lakeridge Pkwy.
Ashland, VA 23005
804-228-7473

State of Utah
Department of Administrative Services
Division of Facilities Construction & Management
4110 State Office Building
Salt Lake City, Utah 84114
Phone: (801) 538 - 3018
Fax: (801) 538 - 3267

DIVISION OF FACILITIES CONSTRUCTION AND MANAGEMENT
REVIEWED FOR CODE COMPLIANCE
SIGNATURE: Ernie Gelfe
DATE: 08-05-2014

PROFESSIONAL STRUCTURAL ENGINEER
No. 295747
TAIT A. KETCHAM
04/21/2014
STATE OF UTAH

ARCHITECT-ENGINEER STAMP

Unified State Laboratory Module 2

4451 South 2700 West, Taylorsville, UT 84118

DFCM #:	13020300
Project #:	13062
DATE:	ISSUE TYPE:
APRIL 21, 2014	BID SET
CHECKED BY	TAK
DRAWN BY	SJS

PENTHOUSE FLOOR/ ROOF FRAMING PLAN - AREA C

S104C

VOLUME 1

ROOF FRAMING PLAN NOTES:

1. VERIFY ROOF SLOPES, DRAINS, AND DECK BEARING ELEVATIONS WITH ARCHITECTURAL DRAWINGS. SEE ROOF FRAMING DETAILS ON SHEET (S701).
2. ALL JOISTS SHALL BE FLUSH FRAMED. UNO.
3. ALL ROOF OPENINGS SHALL BE FRAMED AS INDICATED IROOF FRAMING DETAILS ON SHEET (S701).
4. SEE ROOF FRAMING DETAILS ON SHEET (S701) FORCONCENTRATED LOADS LOCATED FURTHER THAN 6" FROM JOIST/GIRDER PANEL JOINT.
5. SEE ROOF FRAMING DETAILS ON SHEET (S701) FORMECHANICAL UNITS HUNG BELOW JOISTS.
6. VERIFY SIZE, WEIGHT, AND LOCATION OF ALL ROOF TOP MECHANICAL UNITS WITH ARCHITECTURAL AND MECHANICAL DRAWINGS. SEE ROOF FRAMING DETAILS ON SHEET (S701) FOR STEEL FRAMES AT ALL ROOF TOP EQUIPMENT. COORDINATE OPENINGS WITH MECHANICAL, ELECTRICAL, AND GENERAL CONTRACTORS.
7. OPEN WEB STEEL JOISTS AND JOIST GIRDERS SHALL BE DESIGNATED BY THE MANUFACTURER TO SUPPORT THE MECHANICAL AND LATERAL LOADS SHOWN ON THE ROOFFRAMING PLANS IN ADDITION TO THE UNIFORM AND POINT LOADS SHOWN.
8. WHERE SKYLIGHTS OR MECHANICAL UNITS INTERRUPT HORIZONTAL BRIDGING, PROVIDE CROSS BRIDGING AT JOIST SPACES ON EA SIDE, TYPICAL.
9. WHERE DIAGONAL BRIDGING CONFLICTS WITH MECHANICAL DUCTS, REMOVE DIAGONAL BRIDGING AND REPLACE WITH HORIZONTAL BRIDGING (AFTER ROOF DECK IS IN PLACE).
10. * - INDICATES THAT THESE JOISTS SHALL BE DESIGNED FOR AN ADLOAD OF 1000# AT ANY TOP CHORD PANEL POINT. THIS LOAD IS TO BE ADDED TO THE GIRDER TOP CHORD LOAD. MULTIPLE "*" ARE ADDITIVE.
11. JOIST DESIGNER SHALL DESIGN JOISTS AND SUPPLY ADDITIONAL BRIDGING AS REQUIRED FOR 8 PSF NET UPLIFT DITO WIND. THERE IS NO UPLIFT ON GIRDERS.
12. SEE SHEETS (S401) AND (S402) FOR FRAME ELEVATIONS.
13. SEE ARCHITECTURAL PLANS FOR ALL STEEL COLUMN LOCATIONS (DIMENSIONS).
14. SPRINKLER DESIGNER SHALL COORDINATE THE SPRINKLER DESIGN WITH THE JOIST/GIRDER SHOP DRAWINGS.

MARKS AND SYMBOLS LEGEND

- SECTION MARK / SHEET NUMBER
- FRAME EL MARK FRAME / EL ON (S400's)
- MTL ROOF DECK, SEE GSN ON (S101)
- BRG WALL BLW
- STL COL, SEE SCHED ON (S304)
- LATERAL FRAME MOMENT CONNECTIONS
- GRAVITY MOMENT CONNECTIONS
- SFRSC CONNECTION, SEE (S400) SHEETS FOR DETAILS
- DOUBLE SHEAR CONNECTION, SEE SCHED ON (S303)
- ML-x — MAS LINTEL, SEE SCHED ON (S301)
- T=C=xK — ROOF JST TOP CHORD SHALL BE DESIGNED FOR AN ADDITIONAL LOAD OF __KIPS IN TENSION AND COMPRESSION. LOADS ARE PROVIDED AT ULTIMATE STRENGTH LEVEL
- RD — ROOF DRAIN. SEE ARCH AND MECH FOR EXACT LOCATION. SEE DET (B3/S701) FOR FRAMING
- (SFRSC) — SEISMIC FORCE RESISTING SYSTEM COLLECTOR. SEE DETS ON SHEET (S405) FOR CONNECTIONS
- L3 — L3x3 1/4 BRACE, SEE (S400) SHEETS FOR ADDITIONAL INFORMATION
- L4 — L4x4x3/8 FRAME BRACING, SEE DETAILS ON (S404) AND (S406)
- L5 — L5x5x3/8 FRAME BRACING, SEE DETAILS ON SHEETS (S404) AND (S406)
- ROOF ANCHOR, SEE DETAIL (C3/S703). SEE ARCH DWG FOR LOCATION
- OWSJ (XXX/XXX) — OPEN WEB STEEL JOIST (TOTAL LOAD/ LIVE LOAD)
- INDICATES PERFORATED ROOF DECK, SEE ARCH

SNOW DRIFT LOADING DIAGRAM

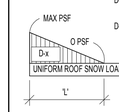

D-1 MAX = 115 PSF L =23'-0"
D-2 MAX = 65 PSF L =13'-0"

KEY PLAN

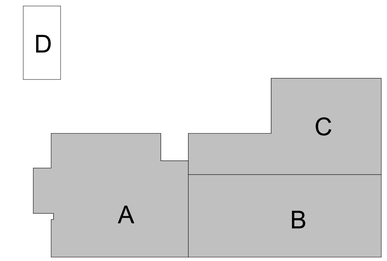

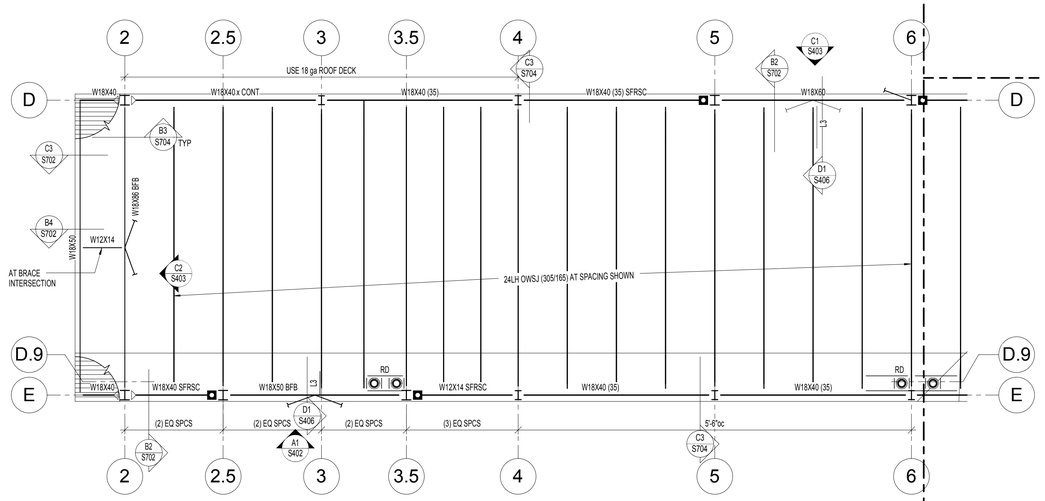

NORTH

C1 / S105 PENTHOUSE ROOF FRAMING PLAN - AREA A
SCALE: 1/8" = 1'-0"

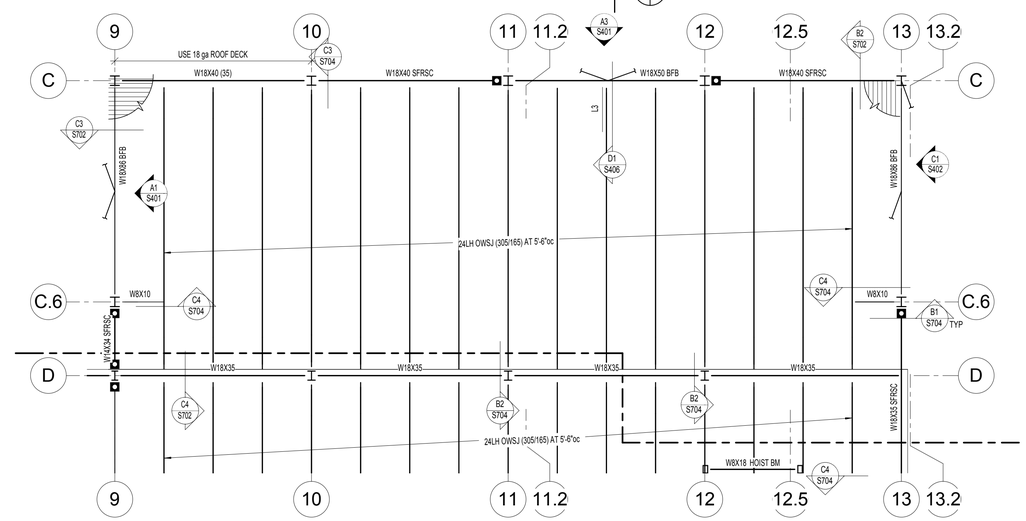

NORTH

C3 / S105 PENTHOUSE ROOF FRAMING PLAN - AREA C
SCALE: 1/8" = 1'-0"

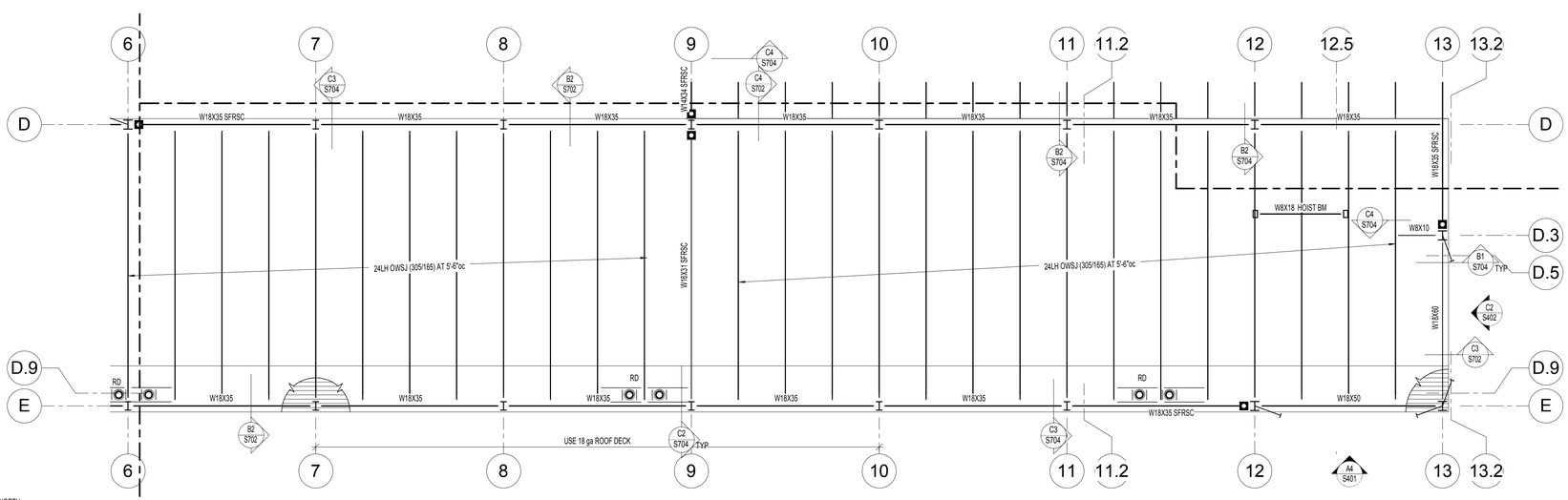

NORTH

A1 / S105 PENTHOUSE ROOF FRAMING PLAN - AREA B
SCALE: 1/8" = 1'-0"

APRIL 21, 2014
BID SET

NOTE:
THESE STRUCTURAL DRAWINGS ARE BASED ON ARCHITECTURAL DRAWINGS DATED APRIL 10, 2014

DIMENSIONS AND ELEVATIONS, AS THEY RELATE TO THE BUILDING IN GENERAL, i.e. GRID TO GRID DIMENSIONS OR DECK BEARING ELEVATIONS, ARE SUPPLIED BY THE ARCHITECT. THEY ARE PROVIDED ON THE STRUCTURAL PLANS AND DETAILS FOR THE CONVENIENCE OF THE CONTRACTOR. VERIFY DIMENSIONS AND ELEVATIONS WITH ARCHITECTURAL DRAWINGS.

DUNN ASSOCIATES, INC
Consulting Structural Engineers
WWW.DUNN-SE.COM
PH: 801-575-8877 FAX: 801-575-8875

CRSA
649 E. South Temple
Salt Lake City, UT 84102
801.355.5915

MWL
11798 N. Lakeridge Pkwy.
Ashland, VA 23005
804-228-7473

State of Utah
Department of Administrative Services
Division of Facilities Construction & Management
4110 State Office Building
Salt Lake City, Utah 84114
Phone: (801) 538 - 3018
Fax: (801) 538 - 3267

DIVISION OF FACILITIES CONSTRUCTION AND MANAGEMENT
REVIEWED FOR CODE COMPLIANCE
SIGNATURE:
DATE: 08-05-2014

PROFESSIONAL STRUCTURAL ENGINEER
No. 295747
TAIT A. KETCHAM
04/21/2014
STATE OF UTAH

ARCHITECT-ENGINEER STAMP

Unified State Laboratory Module 2

4451 South 2700 West, Taylorsville, UT 84118

DFCM #:	13020300
Project #:	13062
DATE:	ISSUE TYPE:
APRIL 21, 2014	BID SET
CHECKED BY	TAK
DRAWN BY	SJS

PENTHOUSE ROOF FRAMING PLANS

S105

VOLUME 1

BASIS OF DESIGN

1.	Governing Building Code	International Building Code 2012
2.	Seismic Risk Category	II
3.	Roof Snow Load	
4.1.	Ground Snow Load	Pg = 43 psf
4.2.	Flat Roof Snow Load	Pf = 36 psf
4.3.	Snow Exposure Factor	Ce = 1.0
4.4.	Thermal Factor	Ct = 1.2
4.5.	Snow Load Importance Factor	Is = 1.0
4.	Wind Load	
4.1.	Basic Wind Speed (3 Second Gust)	115 mph
4.2.	Wind Directionality Factor	Kd = 0.85
4.3.	Wind Exposure Category	C
4.4.	Wind Topographic Factor	Kzt = 1.0
4.5.	Internal Pressure Coefficient	Open Structure
5.	Seismic Design Criteria	
5.1.	Mapped Spectral Response Accelerations	
5.1.1.	Short Period Acceleration	SS = 1.476
5.1.2.	1-Second Acceleration	S1 = 0.490
5.2.	Spectral Response Coefficients	
5.2.1.	Short Period Acceleration	SDS = 0.984
5.2.2.	1-Second Acceleration	SD1 = 0.493
5.3.	Site Class (Soil Profile)	D
5.4.	Seismic Importance Factor	1.0
5.5.	Seismic Design Category	D
5.6.	Effective Structural Seismic Weight	W
5.7.	Basic Seismic Force Resisting System	Ordinary Steel Moment Frames
5.7.1.	Response Modification Coefficient	R = 3.5
5.7.2.	System Overstrength Factor	Ωo = 3.0
5.7.3.	Deflection Amplification Factor	CD = 3.0
5.7.4.	Design Base Shear	V = Cs*W = 0.284W
5.8.	Analysis Procedure	Equivalent Lateral Force
6.	Serviceability Criteria	
6.2.	Deflection Limits	Total / Live/Snow
	Roof	L/240 / L/360

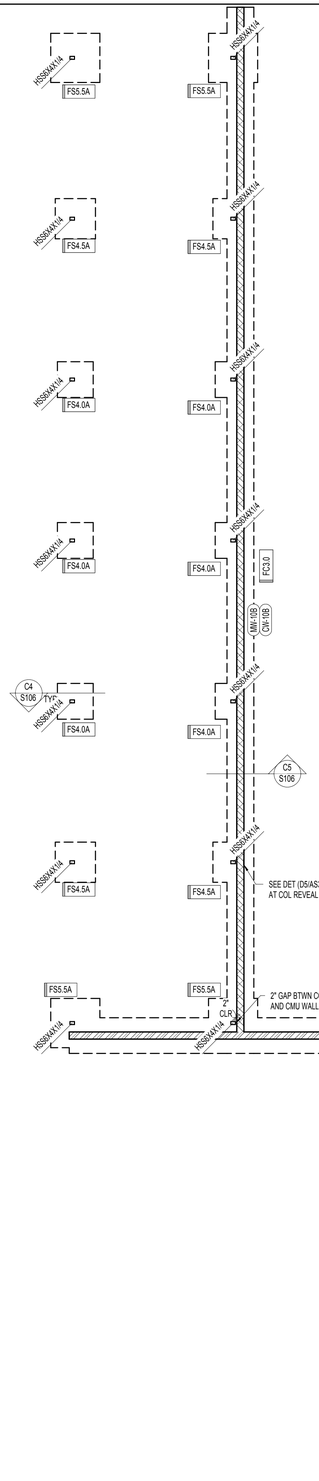

B1 S106 CARPORT FOOTING AND FOUNDATION PLAN
SCALE: 1/8" = 1'-0"

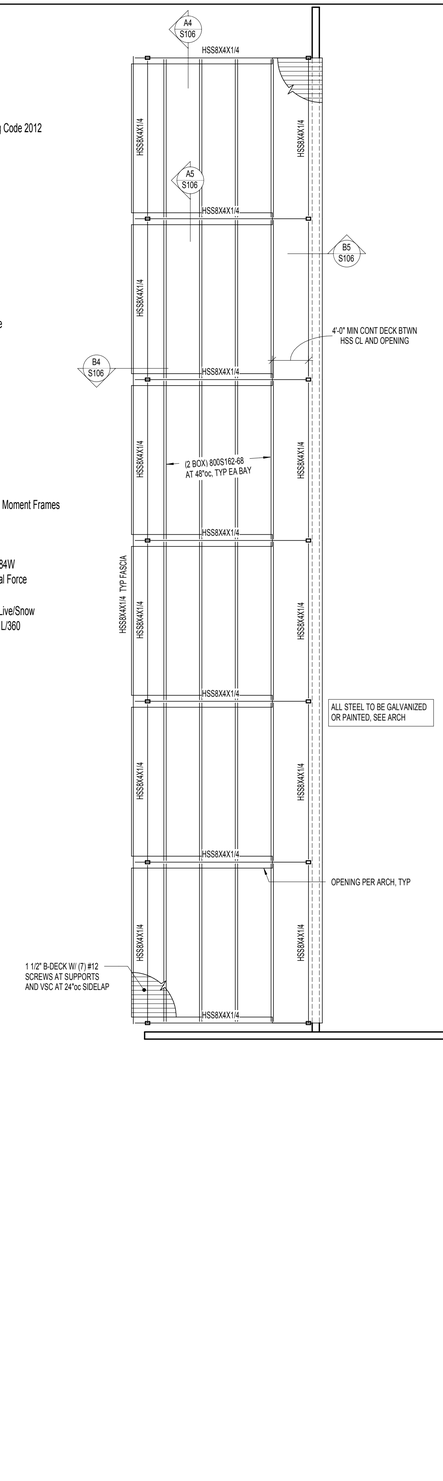

B2 S106 CARPORT ROOF FRAMING PLAN
SCALE: 1/8" = 1'-0"

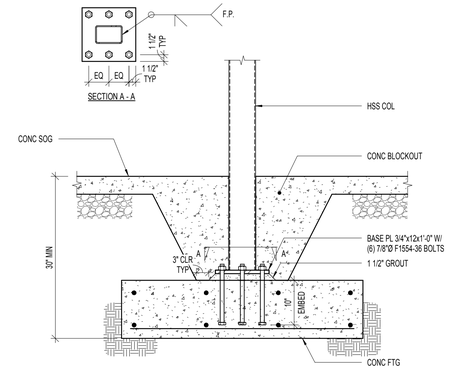

C4 S106 TYPICAL COLUMN BASE AT CARPORT
NO SCALE:

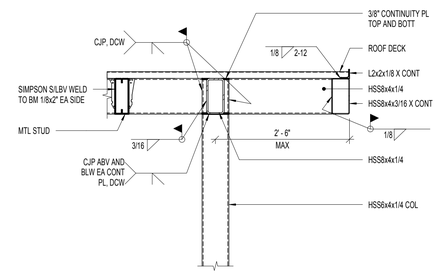

B4 S106 TOP OF COLUMN AT OVERHANG
NO SCALE:

SCHEDULE

H (MAX)	MAS WALL	CONC WALL	FOOTING
8'-0"	MW-10B	CW-10B	FC3.0A
12'-8"	MW-10C	CW-10C	FC4.0A

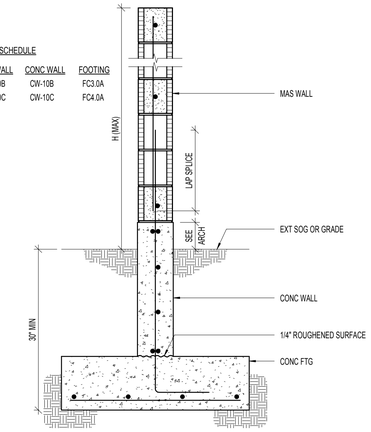

C5 S106 TYPICAL SITE WALL
NO SCALE:

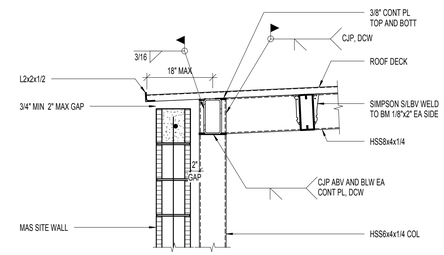

B5 S106 TOP OF COLUMN AT SITE WALL
NO SCALE:

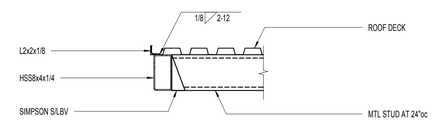

A4 S106 BEAM TO STUD CONNECTION
NO SCALE:

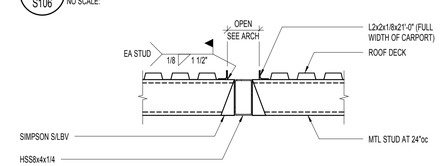

A5 S106 BEAM TO STUD AT ROOF OPENING
NO SCALE:

APRIL 21, 2014
BID SET

NOTE:
THESE STRUCTURAL DRAWINGS ARE BASED ON ARCHITECTURAL DRAWINGS DATED APRIL 10, 2014

DIMENSIONS AND ELEVATIONS, AS THEY RELATE TO THE BUILDING IN GENERAL, i.e. GRID TO GRID DIMENSIONS OR DECK BEARING ELEVATIONS, ARE SUPPLIED BY THE ARCHITECT. THEY ARE PROVIDED ON THE STRUCTURAL PLANS AND DETAILS FOR THE CONVENIENCE OF THE CONTRACTOR. VERIFY DIMENSIONS AND ELEVATIONS WITH ARCHITECTURAL DRAWINGS.

DUNN ASSOCIATES, INC
Consulting Structural Engineers
WWW.DUNN-SE.COM
PH: 801-575-8877 FAX: 801-575-8875

CRSA
649 E. South Temple
Salt Lake City, UT 84102
801.355.5915

MWL
11798 N. Lakeridge Pkwy.
Ashland, VA 23005
804-228-7473

State of Utah
Department of Administrative Services
Division of Facilities Construction & Management
4110 State Office Building
Salt Lake City, Utah 84114
Phone: (801) 538 - 3018
Fax: (801) 538 - 3267

DIVISION OF FACILITIES CONSTRUCTION AND MANAGEMENT
REVIEWED FOR CODE COMPLIANCE
SIGNATURE:
DATE: 08-05-2014

PROFESSIONAL STRUCTURAL ENGINEER
No. 295747
TAIT A. KETCHAM
04/21/2014
STATE OF UTAH

ARCHITECT-ENGINEER STAMP

Unified State Laboratory Module 2

4451 South 2700 West, Taylorsville, UT 84118

DFCM #: 13020300
Project #: 13062

DATE:	ISSUE TYPE:
APRIL 21, 2014	BID SET
CHECKED BY	TAK
DRAWN BY	SJS

CARPORT PLANS AND DETAILS

S106
VOLUME 1

CONCRETE FOOTING SCHEDULE

MARK	WIDTH	LENGTH	DEPTH	REINFORCING CROSSWISE NO	SIZE	LENGTH	SPACING	REINFORCING LENGTHWISE NO	SIZE	LENGTH	SPACING	COMMENTS	MINIMUM STRUCTURAL FILL THICKNESS
FC2.0	2' - 0"	CONT	12"	—	—	—	—	3	#4	CONT	EQ		24"
FC3.0	3' - 0"	CONT	12"	—	#5	2' - 6"	14"	3	#5	CONT	EQ		24"
FC4.0	4' - 0"	CONT	12"	—	#5	3' - 6"	14"	4	#5	CONT	EQ	TOP MAT	24"
				—	#5	3' - 6"	12"	5	#5	CONT	EQ	BOTT MAT	
FC4.0A	4' - 0"	CONT	12"		#5	3' - 6"	12"	5	#5	CONT			24"
FC5.0A	5' - 0"	CONT	30"	—	#5	4' - 6"	18"	3	#5	CONT	EQ	TOP MAT	24"
				—	#6	4' - 6"	8"	6	#6	CONT	EQ	BOTT MAT	
FC5.0B	5' - 0"	CONT	33"	—	#8	4' - 6"	10"	--	#8	CONT	10"	TOP MAT	24"
				—	#8	4' - 6"	12"	--	#8	CONT	12"	BOTT MAT	
FC8.0	8' - 0"	CONT	36"	—	#5	7' - 6"	14"	8	#6	CONT	EQ	TOP MAT	24"
				—	#8	7' - 6"	12"	8	#8	CONT	EQ	BOTT MAT	
FC10.0	10' - 0"	CONT	36"	—	#5	9' - 6"	14"	7	#6	CONT	EQ	TOP MAT	36"
				—	#8	9' - 6"	12"	9	#8	CONT	EQ	BOTT MAT	
FC12.0	12' - 0"	CONT	36"	—	#5	11' - 6"	14"	11	#8	CONT	EQ	TOP MAT	48"
				—	#9	11' - 6"	12"	11	#8	CONT	EQ	BOTT MAT	
FC16.0	16' - 0"	CONT	42"	—	#5	15' - 6"	14"	11	#8	CONT	EQ	TOP MAT	60"
				—	#9	15' - 6"	12"	19	#10	CONT	EQ	BOTT MAT	
FC16.0A	16' - 0"	CONT	42"	—	#5	15' - 6"	14"	14	#7	CONT	EQ	TOP MAT	36"
				—	#11	15' - 6"	10"	23	#11	CONT	EQ	BOTT MAT	
FS3.0	3' - 0"	3 '-0"	12"	3	#5	2' - 6"	EQ	3	#5	2' - 6"	EQ		24"
FS4.0	4' - 0"	4 '-0"	12"	4	#5	3' - 6"	EQ	4	#5	3' - 6"	EQ		24"
FS4.0A	4' - 0"	4 '-0"	13"	4	#5	3' - 6"	EQ	4	#5	3' - 6"	EQ	TOP AND BOTT	24"
FS4.5A	4' - 6"	4 '-6"	13"	4	#5	4' - 0"	EQ	4	#5	4' - 0"	EQ	TOP AND BOTT	24"
FS5.0	5' - 0"	5 '-0"	13"	5	#5	4' - 6"	EQ	5	#5	4' - 6"	EQ		24"
FS5.5A	5' - 6"	5 '-6"	13"	4	#5	5' - 0"	EQ	4	#5	5' - 0"	EQ	TOP AND BOTT	24"
FS6.0	6' - 0"	6 '-0"	15"	7	#5	5' - 6"	EQ	7	#5	5' - 6"	EQ		24"
FS7.0	7' - 0"	7 '-0"	16"	7	#6	6' - 6"	EQ	7	#6	6' - 6"	EQ		24"
FS8.0	8' - 0"	8 '-0"	18"	9	#6	7' - 6"	EQ	9	#6	7' - 6"	EQ		24"
FS9.0	9' - 0"	9 '-0"	20"	8	#7	8' - 6"	EQ	8	#7	8' - 6"	EQ		36"
FS10.0	10' - 0"	10 '-0"	21"	10	#7	9' - 6"	EQ	10	#7	9' - 6"	EQ		36"
FS11.0	11' - 0"	11 '-0"	23"	9	#8	10' - 6"	EQ	9	#8	10' - 6"	EQ		36"
FS12.0	12' - 0"	12 '-0"	25"	11	#8	11' - 6"	EQ	11	#8	11' - 6"	EQ		48"
FS13.0	13' - 0"	13 '-0"	28"	13	#8	12' - 6"	EQ	13	#8	12' - 6"	EQ		60"
FS14.0	14' - 0"	14 '-0"	30"	11	#9	13' - 6"	EQ	11	#9	13' - 6"	EQ		60"
FS15.0	15' - 0"	15 '-0"	32"	13	#9	14' - 6"	EQ	13	#9	14' - 6"	EQ		60"
FS22.0	22' - 0"	22 '-0"	39"	22	#9	21' - 6"	EQ	22	#9	21' - 6"	EQ		60"

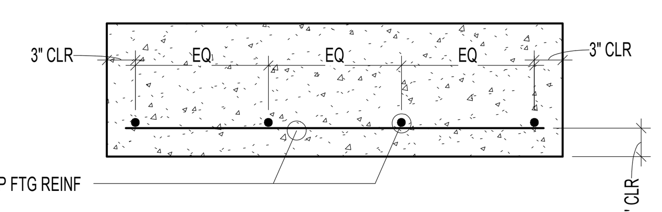

TYPICAL FOOTING SECTION

CONCRETE FOOTING NOTES:

1. PLACE ALL FOOTING REINFORCING IN BOTTOM OF FOOTING WITH 3" CLEAR CONCRETE COVER, UNLESS NOTED OTHERWISE.
2. TOP REINFORCING, WHERE SPECIFIED, SHALL BE PLACED IN THE TOP OF THE FOOTING WITH 2" MINIMUM CONCRETE COVER.
3. IF FOOTINGS ARE EARTH FORMED, FOOTING WIDTH AND LENGTH SHALL BE 6" WIDER AND LONGER THAN SCHEDULED.
4. SEE GENERAL STRUCTURAL NOTES FOR ALL OTHER REQUIREMENTS.
5. NOT ALL FOOTINGS ARE USED, SEE FOUNDATION PLAN FOR FOOTING MARKS.
6. RUN CONTINUOUS BARS IN 'FC' FOOTING THROUGH INTERSECTED 'FS' FOOTINGS.
7. EXTEND CONTINUOUS FOOTINGS 1'-0" BEYOND END OF WALL, EXCEPT AT INTERSECTING CORNERS OR UNO ON PLAN.

B1 / S301 CONCRETE FOOTING SCHEDULE
NO SCALE:

CONCRETE PIER SCHEDULE

MARK	PIER SIZE	REINFORCING VERTICAL	REINFORCING TIES	TYPE	COMMENTS
CP -1	24" x24"	(8) #7	#3 AT 8"oc	A	
CP -2	24" x24"	(8) #7	#3 AT 8"oc	B	
CP -3	20" x20"	(8) #5	#3 AT 8"oc	B	
CP -4	20" x20"	(8) #5	#3 AT 8"oc	D	
CP -5	36" x40"	(8) #9	#4 AT 12"oc	B	
CP -6	30" x38"	(8) #9	#4 AT 12"oc	C	

CONCRETE PIER NOTES:
1. INSTALL (3) SETS OF TIES AT 3"oc AT TOP OF ALL PIERS (UNO).
2. ALTERNATE POSITION OF HOOKS IN PLACING SUCCESSIVE SETS OF TIES.

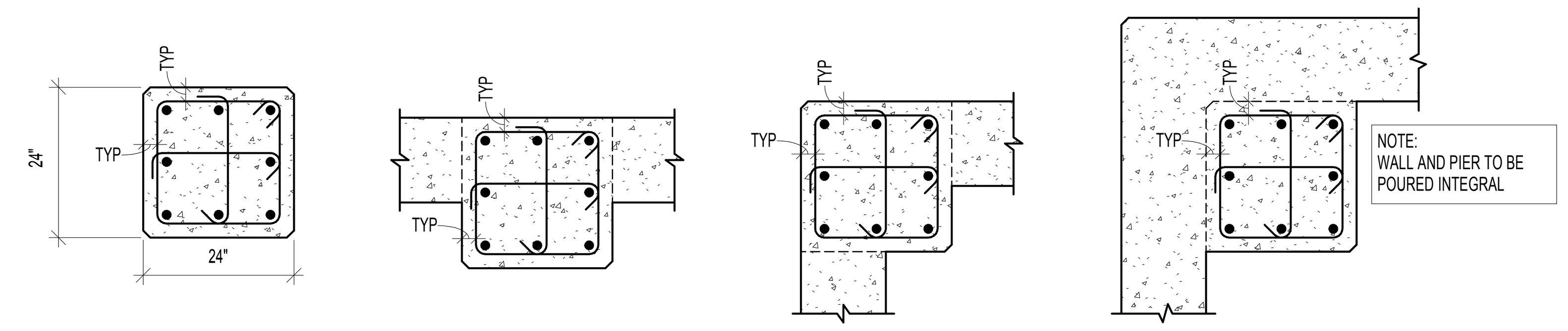

C2 / S301 CONCRETE PIER SCHEDULE
NO SCALE:

CONCRETE REINFORCING BAR LAP SPLICE SCHEDULE

BAR SIZE	f'c = 3000 PSI REGULAR CLASS A	B	TOP CLASS A	B	f'c = 4000 PSI REGULAR CLASS A	B	TOP CLASS A	B	f'c = 4500 PSI REGULAR CLASS A	B	TOP CLASS A	B	f'c = 5000 PSI REGULAR CLASS A	B	TOP CLASS A	B
#3	17"	22"	22"	28"	15"	19"	19"	25"	14"	18"	18"	23"	13"	17"	17"	22"
#4	22"	29"	29"	38"	19"	25"	25"	33"	18"	24"	24"	31"	17"	23"	23"	29"
#5	28"	36"	36"	47"	24"	31"	31"	41"	23"	30"	30"	38"	22"	28"	28"	36"
#6	33"	43"	43"	56"	29"	37"	37"	49"	27"	35"	35"	46"	26"	34"	34"	49"
#7	48"	63"	63"	81"	42"	54"	54"	71"	40"	51"	51"	67"	38"	49"	49"	63"
#8	55"	72"	72"	93"	48"	62"	62"	81"	45"	59"	59"	76"	43"	56"	56"	72"
#9	62"	81"	81"	105"	54"	70"	70"	91"	51"	66"	66"	86"	48"	63"	63"	81"
#10	70"	91"	91"	118"	61"	79"	79"	102"	57"	74"	74"	96"	54"	71"	71"	92"
#11	78"	101"	101"	131"	67"	87"	87"	114"	64"	82"	82"	107"	60"	78"	78"	102"

CONCRETE REINFORCING BAR LAP SPLICE NOTES:

1. THIS SCHEDULE SHALL BE USED FOR ALL SPLICES, UNLESS NOTED OTHERWISE.
2. HORIZONTAL BARS ARE CLASSIFIED AS TOP BARS WHERE 12", OR MORE, OF FRESH CONCRETE IS CAST BELOW THE REINFORCING BARS.
3. CLASS 'B' SPLICES SHALL BE USED FOR ALL SPLICES UNLESS NOTED OTHERWISE.
4. TIES AND STIRRUPS SHALL NOT BE SPLICED.
5. FOR ALL LIGHTWEIGHT CONCRETE, LAP LENGTHS SHALL BE MULTIPLIED BY 1.3.
6. FOR ALL EPOXY COATED BARS, LAP LENGTHS SHALL BE MULTIPLIED BY 1.3 FOR TOP BARS AND 1.5 FOR REGULAR BARS.
7. LAP LENGTHS SHALL BE MULTIPLIED BY 1.25 AT SHEARWALL BOUNDARY ELEMENTS.
8. DEVELOPMENT LENGTH 'Ld' IS EQUAL TO CLASS 'A' SPLICE.
9. IF REINFORCING HAS CLEAR COVER LESS THAN ONE BAR DIAMETER, INCREASE LAP LENGTHS BY 50%.
10. IF REINFORCING IS NOT ENCLOSED IN TIES OR STIRRUPS AND IS SPACED TIGHTER THEN 3 BAR DIAMETERS, INCREASE LAP LENGTHS BY 50%.
11. LAP LENGTHS SHALL BE MULTIPLIED BY 1.25 FOR GRADE 75 REBAR.

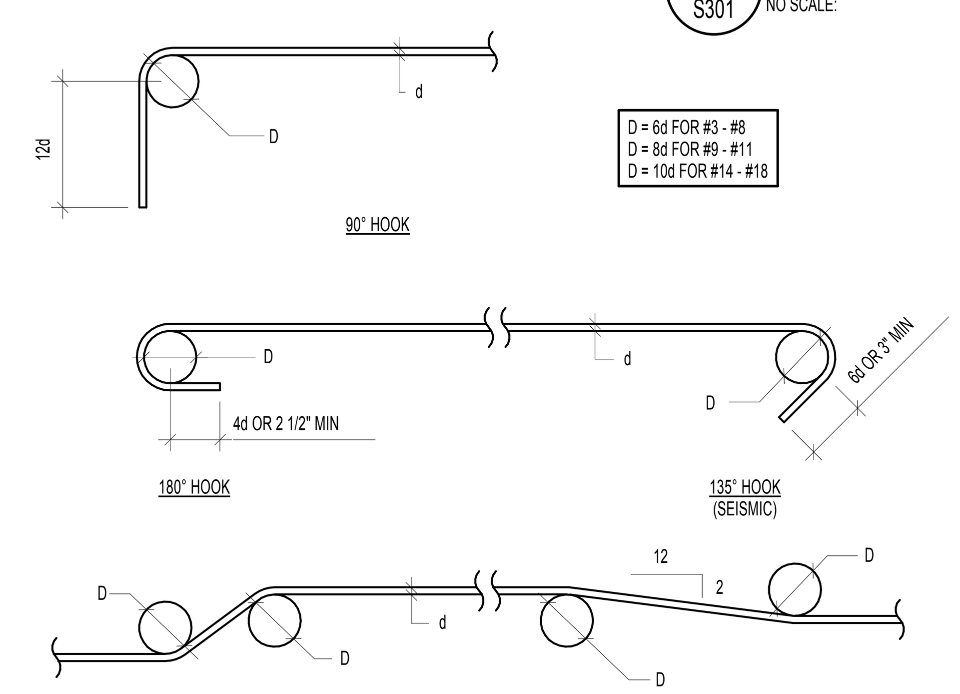

B2 / S301 CONCRETE REINFORCING BAR LAP SPLICE SCHEDULE / BAR BENDING DIAGRAMS
NO SCALE:

CONCRETE WALL SCHEDULE

MARK	THICKNESS	REINFORCING VERTICAL	REINFORCING HORIZONTAL	REINFORCING TOP AND BOTTOM	WALL TYPE	COMMENTS
CW-08	8"	(1) #4 AT 18"oc	(1) #4 AT 12"oc	(2) #5	A	
CW-08A	8"	(1) #5 AT 12"oc	(1) #5 AT 12"oc	(2) #5	A	
CW-10	10"	(1) #5 AT 6" IF (1) #5 AT 9" OF	(2) #5 AT 12"oc	(2) #5	A	
CW-10B	10"	(1) #5 AT 16"oc	(1) #5 AT 15"oc	(2) #5	A	NOTE 4
CW-10C	10"	(2) #5 AT 16"oc	(1) #5 AT 15"oc	(2) #5	E	NOTE 4
CW-12	12"	(2) #4 AT 18"oc	(2) #4 AT 16"oc	(2) #5	C	__
CW-14	14"	(2) #4 AT 18"oc	(2) #4 AT 14"oc	(2) #5	C	__
CW-24	24"	(2) #4 AT 12"oc	(2) #5 AT 12"oc	(2) #5	C	__

CONCRETE WALL NOTES:

1. SEE GENERAL STRUCTURAL NOTES FOR COVER AND OTHER REQUIREMENTS NOT NOTED IN SCHEDULE.
2. CONCRETE WALLS NOT DESIGNATED ON THE PLANS SHALL BE REINFORCED AS FOLLOWS:

THICKNESS	VERTICAL REINFORCING	HORIZONTAL REINFORCING
6"	#4 BARS AT 18"oc	#4 BARS AT 16"oc
8"	#4 BARS AT 18"oc	#4 BARS AT 12"oc
10"	#4 BARS AT 16"oc	#5 BARS AT 15"oc
12"	#4 BARS AT 18"oc EA FACE	#4 BARS AT 16"oc EA FACE

3. PLACE STEEL IN THE CENTER OF THE WALL (EXCEPT TYPE 'B' AND RETAINING WALLS). WALLS THICKER THAN 10" SHALL HAVE TWO CURTAINS OF REINFORCEMENT (PLACED NEAR EA FACE OF THE WALL), UNLESS NOTED OTHERWISE ON THE STRUCTURAL DRAWINGS.
4. EXTEND WALL VERTS TO LAP WITH CMU VERTS ABOVE.

WALL REINFORCEMENT PLACEMENT TYPES:

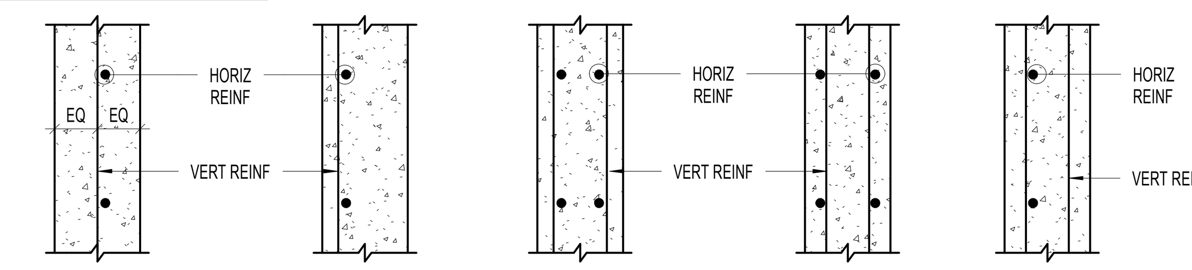

C4 / S301 CONCRETE WALL SCHEDULE
NO SCALE:

CONCRETE SUSPENDED SLAB SCHEDULE

MARK	THICKNESS	PRIMARY REINFORCING A_1 BARS	PRIMARY REINFORCING B_1 BARS	PRIMARY REINFORCING C_1 BARS	SECONDARY REINFORCING A_2 BARS	SECONDARY REINFORCING B_2 BARS	SECONDARY REINFORCING C_2 BARS	D BARS
CSS-1	8"	#5 AT 12"oc	#4 AT 12"oc	#5 AT 12"oc	#5 AT 18"oc	#4 AT 12"oc	#4 AT 12"oc	4 AT 18"oc

CONCRETE SUSPENDED SLAB NOTES:

1. PRIMARY REINFORCING SHALL RUN PARALLEL TO THE DIRECTION OF THE ARROW ( ) SHOWN ON PLAN.
2. PRIMARY BOTTOM REINFORCING (A1 BARS) SHALL BE PLACED BELOW SECONDARY BOTTOM REINFORCING. PRIMARY TOP REINFORCING (B1 AND C1 BARS) SHALL BE PLACED ABOVE SECONDARY TOP REINFORCING.
3. LOCATE BOTTOM BARS WITH 1 1/2" CLEAR (UNO BY GENERAL STRUCTURAL NOTES) TO BOTTOM OF SLAB.
4. LOCATE TOP BARS WITH 1 1/2" CLEAR (UNO BY GENERAL STRUCTURAL NOTES) TO TOP OF SLAB.

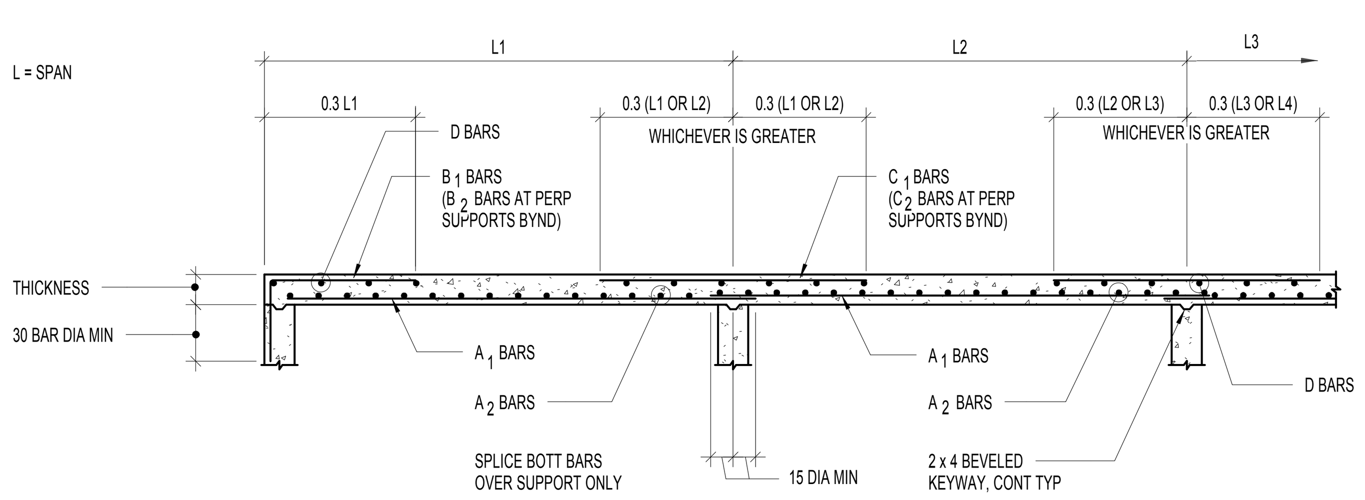

A1 / S301 CONCRETE SUSPENDED SLAB SCHEDULE
NO SCALE:

CONCRETE COLUMN SCHEDULE

RANGE CAP

2nd FLOOR

	CC-1
DIMENSIONS	8" x 8" (A)
f'c	MATCH WALL
VERTICAL REINFORCING	(4) #6
TIE REINFORCING	#3 AT 8"oc

CONCRETE COLUMN NOTES:

1. AT ANY CROSS SECTION, BARS SHALL BE ARRANGED SYMMETRICALLY AROUND PERIPHERY OF COLUMN (UNO).
2. SHOP DRAWINGS SHALL SHOW ALL SPLICE LOCATIONS.
3. MAX SLOPE OF INCLINED PORTION OF BAR AT VERTICAL OFFSET SHALL BE 1:6 (MAX).
4. CONTRACTOR MAY USE MECHANICAL COUPLERS IN LIEU OF LAPPED SPLICES.
5. ALTERNATE POSITION OF HOOKS IN PLACING SUCCESSIVE SETS OF TIES.
6. SPLICES MAY OCCUR ONLY AT A BRACE FLOOR LEVEL.
7. CONTRACTOR HAS OPTION TO USE LARGER BARS OR HIGHER STRENGTH CONCRETE. IN LIEU OF THOSE SCHEDULED UPON WRITTEN APPROVAL BY THE STRUCTURAL ENGINEER OF RECORD.
8. HORIZONTAL WALL REINFORCEMENT TERMINATING AT A CONCRETE COLUMN SHALL TERMINATE WITH A STANDARD HOOK ENGAGING VERTICAL REINFORCEMENT OF COLUMN.

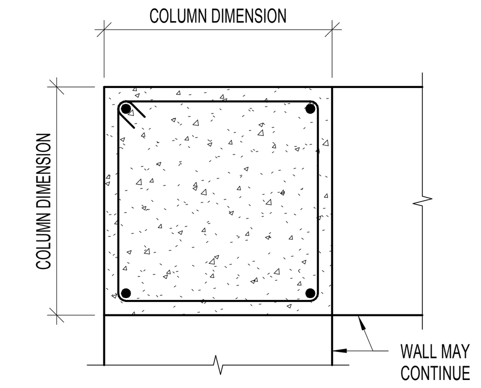

TYPE (A)
(4) BARS

A2 / S301 CONCRETE COLUMN SCHEDULE
NO SCALE:

APRIL 21, 2014
BID SET

NOTE:
THESE STRUCTURAL DRAWINGS ARE BASED ON ARCHITECTURAL DRAWINGS DATED APRIL 10, 2014

DIMENSIONS AND ELEVATIONS, AS THEY RELATE TO THE BUILDING IN GENERAL, i.e. GRID TO GRID DIMENSIONS OR DECK BEARING ELEVATIONS, ARE SUPPLIED BY THE ARCHITECT. THEY ARE PROVIDED ON THE STRUCTURAL PLANS AND DETAILS FOR THE CONVENIENCE OF THE CONTRACTOR. VERIFY DIMENSIONS AND ELEVATIONS WITH ARCHITECTURAL DRAWINGS.

DUNN
DUNN ASSOCIATES, INC
Consulting Structural Engineers
WWW.DUNN-SE.COM
PH: 801-575-8877 FAX: 801-575-8875

CRSA
649 E. South Temple
Salt Lake City, UT 84102
801.355.5915

MWL
11798 N. Lakeridge Pkwy.
Ashland, VA 23005
804-228-7473

State of Utah
Department of Administrative Services
Division of Facilities
Construction & Management
DFCM
4110 State Office Building
Salt Lake City, Utah 84114
Phone: (801) 538 - 3018
Fax: (801) 538 - 3267

DIVISION OF FACILITIES CONSTRUCTION AND MANAGEMENT
REVIEWED FOR CODE COMPLIANCE
SIGNATURE: Enzo Calfa
DATE: 08-05-2014

PROFESSIONAL STRUCTURAL ENGINEER
No. 295747
TAIT A. KETCHAM
04/21/2014
STATE OF UTAH

ARCHITECT-ENGINEER STAMP

Unified State Laboratory Module 2

4451 South 2700 West,
Taylorsville, UT 84118

DFCM #:	13020300
Project #:	13062
DATE:	ISSUE TYPE:
APRIL 21, 2014	BID SET
CHECKED BY	TAK
DRAWN BY	SJS

SCHEDULES

S301

VOLUME 1

MASONRY WALL SCHEDULE

MARK	THICKNESS	MATERIALS	SOLID GROUT	REINFORCING			
				VERTICAL	HORIZONTAL	TYPE	JOINT
MW-06	6"	CMU	YES	(1) #5 AT 32"oc	(1) #4 AT 24"oc	A	YES
MW-10B	10"	CMU	NO	(1) #6 AT 32"oc	(1) #6 AT 48"oc	A	NO
MW-10C	10"	CMU	YES	(2) #5 AT 16"oc	(1) #6 AT 48"oc	C	NO

MASONRY WALL NOTES:

1. COORDINATE WITH ARCHITECTURAL DRAWINGS, MASONRY WALL FINISHES, TYPES OF MATERIAL, COURSING, ETC.
2. DO NOT SOLID GROUT WALLS UNLESS NOTED OTHERWISE.
3. ALL MASONRY BELOW GRADE SHALL BE GROUTED SOLID.
4. VERTICAL REINFORCING SHALL BE CENTERED IN THE WALL UNLESS NOTED OTHERWISE.
5. (1) VERTICAL BARS MINIMUM AT ALL CORNERS AND END OF WALLS.
6. HORIZONTAL WALL REINFORCING SHALL BE PLACED BETWEEN VERTICAL MASONRY COLUMN REINFORCING BARS.
7. HORIZONTAL WALL REINFORCING SHALL CONTINUE THRU MASONRY LINTELS, WHERE BOTH HORIZONTAL WALL REINFORCING AND LINTEL REINFORCING OCCUR IN THE SAME COURSE, USE THE LARGER REINFORCING.
8. MASONRY WALLS NOT DESIGNATED ON THE PLANS SHALL BE REINFORCED AS FOLLOWS:

THICKNESS	VERTICAL REINFORCING	HORIZONTAL REINFORCING
6"	#5 BARS AT 32"oc	#4 BARS AT 48"oc
8"	#5 BARS AT 32"oc	#5 BARS AT 48"oc
10"	#6 BARS AT 32"oc	#6 BARS AT 48"oc
12"	#6 BARS AT 32"oc	(2) #5 BARS AT 48"oc

9. SEE GENERAL STRUCTURAL NOTES FOR ADDITIONAL REQUIREMENTS.
10. MASONRY SHALL BE SPECIAL INSPECTED SEE GENERAL STRUCTURAL NOTES.
11. HORIZONTAL WALL REINFORCEMENT SPACING SHALL NOT EXCEED 48"oc OR THE WALL LENGTH.

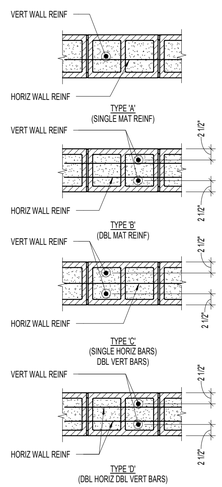

B1 / S302 MASONRY WALL SCHEDULE

NO SCALE:

APRIL 21, 2014
BID SET

NOTE:
THESE STRUCTURAL DRAWINGS ARE BASED ON ARCHITECTURAL DRAWINGS DATED APRIL 10, 2014

DIMENSIONS AND ELEVATIONS, AS THEY RELATE TO THE BUILDING IN GENERAL, i.e. GRID TO GRID DIMENSIONS OR DECK BEARING ELEVATIONS, ARE SUPPLIED BY THE ARCHITECT. THEY ARE PROVIDED ON THE STRUCTURAL PLANS AND DETAILS FOR THE CONVENIENCE OF THE CONTRACTOR. VERIFY DIMENSIONS AND ELEVATIONS WITH ARCHITECTURAL DRAWINGS.

DUNN ASSOCIATES, INC
Consulting Structural Engineers
WWW.DUNN-SE.COM
PH: 801-575-8877 FAX: 801-575-8875

CRSA
649 E. South Temple
Salt Lake City, UT 84102
801.355.5915

MWL
11798 N. Lakeridge Pkwy.
Ashland, VA 23005
804-228-7473

State of Utah
Department of Administrative Services
Division of Facilities Construction & Management
4110 State Office Building
Salt Lake City, Utah 84114
Phone: (801) 538 - 3018
Fax: (801) 538 - 3267

DIVISION OF FACILITIES CONSTRUCTION AND MANAGEMENT
REVIEWED FOR CODE COMPLIANCE
SIGNATURE:
DATE: 08-05-2014

PROFESSIONAL STRUCTURAL ENGINEER
No. 295747
TAIT A. KETCHAM
04/21/2014
STATE OF UTAH

ARCHITECT-ENGINEER STAMP

Unified State Laboratory Module 2

4451 South 2700 West, Taylorsville, UT 84118

DFCM #: 13020300

Project #: 13062

DATE:	ISSUE TYPE:
APRIL 21, 2014	BID SET

CHECKED BY	TAK
DRAWN BY	SJS

SCHEDULES

S302

VOLUME 1

A-325 BOLT SCHEDULE

MAXIMUM BEAM SIZE IN EACH BEAM DEPTH GROUP	A-325N BOLTS	
	No. PER BEAM	SIZE
W8	2	7/8"Ø
W10	2	7/8"Ø
W12	3	7/8"Ø
W14	3	7/8"Ø
W16	4	7/8"Ø
W18	5	7/8"Ø
W21	6	7/8"Ø
W24	7	7/8"Ø
W27	7	7/8"Ø
W30	8	7/8"Ø
W33	9	7/8"Ø
W36	10	7/8"Ø
W40	11	7/8"Ø
W44	12	7/8"Ø

1. BEAM WEB CONNECTION PLATES. THICKNESS EQUALS THE BEAM WEB THICKNESS PLUS 1/8" (1/2" MIN).
2. FILLET WELDS SHALL BE AS FOLLOWS:
   ONE SIDE: PLATE THICKNESS MINUS 1/16" (1/4" MINIMUM)
   TWO SIDES: 1/2 PLATE THICKNESS PLUS 1/16" (1/4" MINIMUM) EA SIDE.
3. THICKNESS EQUALS BEAM FLANGE THICKNESS OF BEAM FRAMING INTO COLUMN WEB (3/8" MINIMUM).
4. BOLT EDGE DISTANCE SHALL BE 1 1/2" MINIMUM AT ALL EDGES. BOLT SPACING SHALL BE AT 3". BOLT SPACING MAY BE REDUCED TO 3x THE BOLT DIAMETER IF IT IS REQUIRED FOR A SINGLE ROW OF BOLTS. A SINGLE ROW OF BOLTS IS PREFERRED.
5. WHEN MORE THAN ONE COLUMN OF BOLTS IS NEEDED, THE FIRST COLUMN SHALL BE COMPLETE WITH THE REMAINDER OF THE BOLTS PLACED IN THE SECOND COLUMN.
6. CLIP ANGLES: L5x3 1/2. THICKNESS SHALL BE EQUAL TO ONE HALF THE BEAM WEB THICKNESS PLUS 1/16" (1/4" MIN). FOR TWO ROWS OF BOLTS OR SKEWED CONNECTIONS. USE BENT PLATES. WHERE COLUMN WIDTH IS SMALLER THAN THE CONNECTING CLIP ANGLES, ANGLE LEGS MAY BE REDUCED TO MATCH WIDTH OF COLUMN.

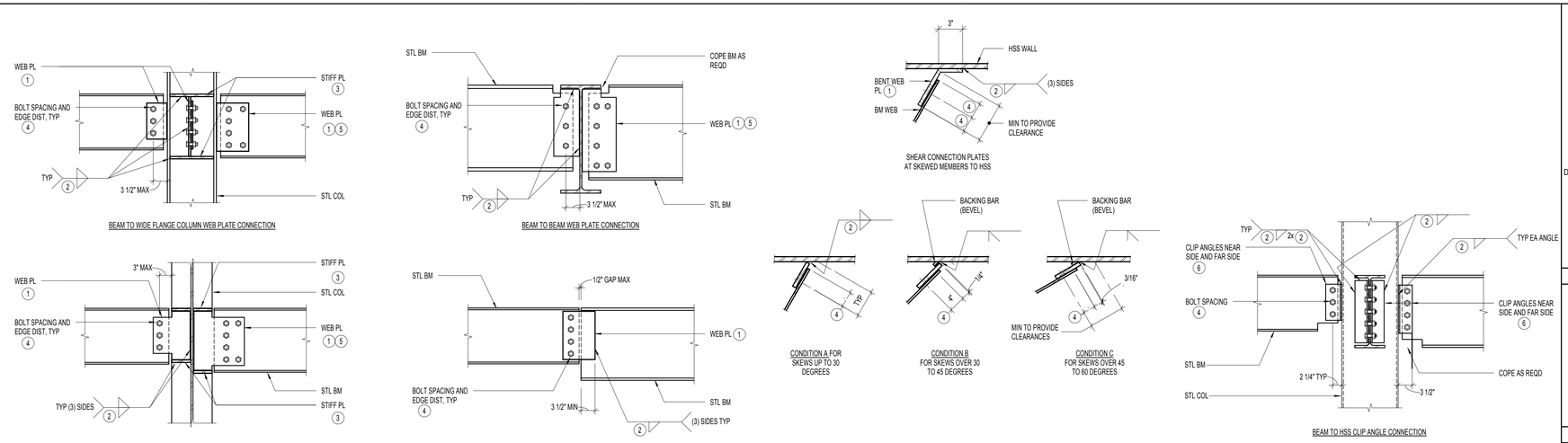

BEAM TO WIDE FLANGE COLUMN WEB PLATE CONNECTION

BEAM TO BEAM WEB PLATE CONNECTION

SHEAR CONNECTION PLATES AT SKEWED MEMBERS TO HSS

BEAM TO WIDE FLANGE COLUMN WEB PLATE CONNECTION

BEAM TO PARALLEL BEAM WEB PLATE CONNECTION

CONDITION A FOR SKEWS UP TO 30 DEGREES

CONDITION B FOR SKEWS OVER 30 TO 45 DEGREES

CONDITION C FOR SKEWS OVER 45 TO 60 DEGREES

SHEAR CONNECTOR PLATES AT SKEWED MEMBERS TO WIDE FLANGE SECTIONS

BEAM TO HSS CLIP ANGLE CONNECTION

C1 / S303 TYPICAL BOLTED WEB PLATE CONNECTIONS WITH BOLT SCHEDULE (SINGLE SHEAR)
NO SCALE:

STEEL ANGLE LINTEL SCHEDULE (NON-STRUCTURAL)

CLEAR OPENING	SIZE OF ANGLE
UP TO 5'-0"	3 1/2" x 3" x 1/4"
5'-1" TO 7'-0"	3 1/2" x 3 1/2" x 1/4"
7'-1" TO 9'-0"	5" x 3 1/2" x 1/4"
9'-1" TO 10'-0"	5" x 3 1/2" x 5/16"
10'-1" TO 11'-0"	5" x 3 1/2" x 3/8"
11'-1" TO 12'-0"	6" x 4" x 3/8"
12'-1" AND OVER	REQUIRES SPECIAL ANALYSIS

NOTE:
1. LINTELS CARRY VENEER ONLY. WHERE FLOORS, ROOFS OF CONCENTRATED LOADS OCCUR, FURTHER ANALYSIS IS NECESSARY. PROVIDE 1" OF BEARING EA END FOR EA FOOT OF SPAN. MINIMUM BEARING OF 6" EA SIDE OF OPENING. USE THIS SCHEDULE UNLESS NOTED OTHERWISE.
2. LINTELS ARE TO BE GALVANIZED.

B1 / S303 STEEL ANGLE LINTEL SCHEDULE (NON-STRUCTURAL)
NO SCALE:

WELD SCHEDULE

BEAM SIZE	CLIP ANGLE		FILLET WELD SIZE		WEB DOUBLER PLATE (2)	
	LENGTH (IN)	SIZE (1)	(A)	(B)	THICKNESS	WELD (C)
W18x40	13	L3 1/2x3x3/8	3/16	5/16	--	--
W21x44	16	L3 1/2x3x5/16	3/16	1/4	--	--
W27x84	20	L4x3 1/2x3/8	1/4	5/16	--	--
W30x90	23	L4x3 1/2x1/2	5/16	7/16	--	--
W33x118	25	L4x4x3/4	11/16	1/2	1/2	7/16
W33x130	25	L4x4x1/2	5/16	3/8	--	--
W33x201	24	L4x4x7/8	3/4	1/2	1/2	7/16
W33x221	24	L4x4x7/8	3/4	1/2	1/2	7/16
W33x241	24	L4x4x1	7/8	5/8	5/8	9/16
W33x263	24	L4x4x1	15/16	11/16	3/4	11/16
W33x291	24	L4x4x1 1/8	1 1/16	3/4	7/8	13/16

(1) CLIP ANGLES: LARGER ANGLES MAY NEED TO BE CUT TO MEET THE DIMENSIONAL REQUIREMENTS LISTED IN THE SIZE COLUMN

(2) 50 ksi

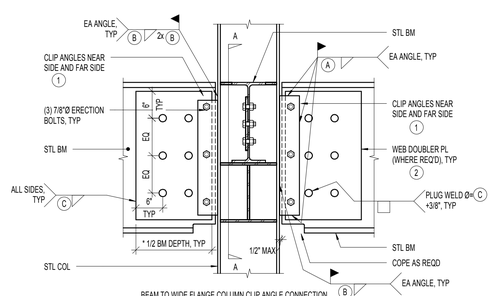

BEAM TO WIDE FLANGE COLUMN CLIP ANGLE CONNECTION

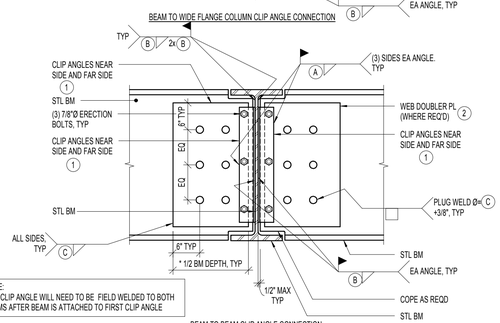

NOTE:
ONE CLIP ANGLE WILL NEED TO BE FIELD WELDED TO BOTH BEAMS AFTER BEAM IS ATTACHED TO FIRST CLIP ANGLE

BEAM TO BEAM CLIP ANGLE CONNECTION

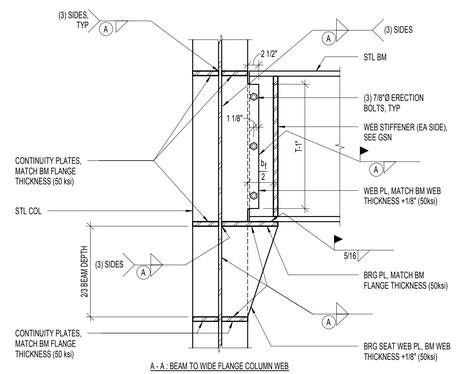

A - A : BEAM TO WIDE FLANGE COLUMN WEB

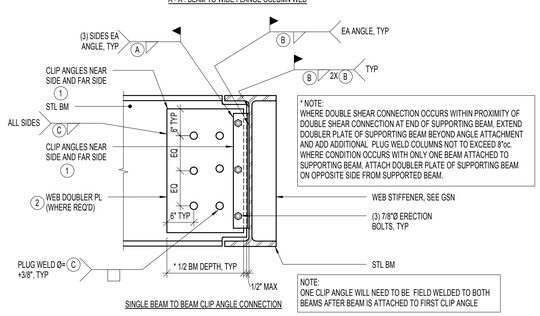

* NOTE:
WHERE DOUBLE SHEAR CONNECTION OCCURS WITHIN PROXIMITY OF DOUBLE SHEAR CONNECTION AT END OF SUPPORTING BEAM, EXTEND DOUBLER PLATE OF SUPPORTING BEAM BEYOND ANGLE ATTACHMENT AND ADD ADDITIONAL PLUG WELD COLUMNS NOT TO EXCEED 8"oc. WHERE CONDITION OCCURS WITH ONLY ONE BEAM ATTACHED TO SUPPORTING BEAM, ATTACH DOUBLER PLATE OF SUPPORTING BEAM ON OPPOSITE SIDE FROM SUPPORTED BEAM.

SINGLE BEAM TO BEAM CLIP ANGLE CONNECTION

NOTE:
ONE CLIP ANGLE WILL NEED TO BE FIELD WELDED TO BOTH BEAMS AFTER BEAM IS ATTACHED TO FIRST CLIP ANGLE

A1 / S303 TYPICAL WELDED CLIP ANGLE CONNECTIONS WITH WELD SCHEDULE (DOUBLE SHEAR)
NO SCALE:

APRIL 21, 2014
BID SET

NOTE:
THESE STRUCTURAL DRAWINGS ARE BASED ON ARCHITECTURAL DRAWINGS DATED APRIL 10, 2014

DIMENSIONS AND ELEVATIONS, AS THEY RELATE TO THE BUILDING IN GENERAL, i.e. GRID TO GRID DIMENSIONS OR DECK BEARING ELEVATIONS, ARE SUPPLIED BY THE ARCHITECT. THEY ARE PROVIDED ON THE STRUCTURAL PLANS AND DETAILS FOR THE CONVENIENCE OF THE CONTRACTOR. VERIFY DIMENSIONS AND ELEVATIONS WITH ARCHITECTURAL DRAWINGS.

DUNN ASSOCIATES, INC
Consulting Structural Engineers
WWW.DUNN-SE.COM
PH: 801-575-8877 FAX: 801-575-8875

CRSA
649 E. South Temple
Salt Lake City, UT 84102
801.355.5915

MWL
11798 N. Lakeridge Pkwy.
Ashland, VA 23005
804-228-7473

State of Utah
Department of Administrative Services
DFCM
Division of Facilities Construction & Management
4110 State Office Building
Salt Lake City, Utah 84114
Phone: (801) 538 - 3018
Fax: (801) 538 - 3267

DIVISION OF FACILITIES CONSTRUCTION AND MANAGEMENT
REVIEWED FOR CODE COMPLIANCE
SIGNATURE: Ernie Gelfe
DATE: 08-05-2014

PROFESSIONAL STRUCTURAL ENGINEER
No. 295747
TAIT A. KETCHAM
04/21/2014
STATE OF UTAH

ARCHITECT-ENGINEER STAMP

Unified State Laboratory Module 2

4451 South 2700 West, Taylorsville, UT 84118

DFCM #: 13020300
Project #: 13062

DATE:	ISSUE TYPE:
APRIL 21, 2014	BID SET
CHECKED BY	TAK
DRAWN BY	SJS

SCHEDULES

S303

VOLUME 1

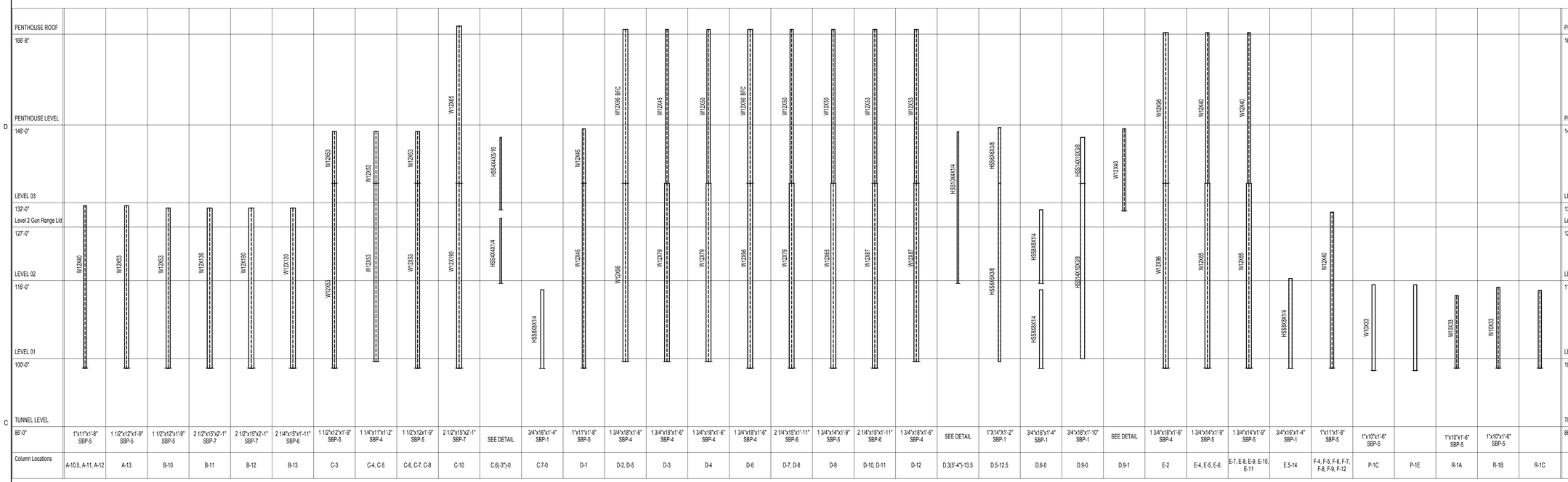

STEEL COLUMN BASE PLATE TYPES:

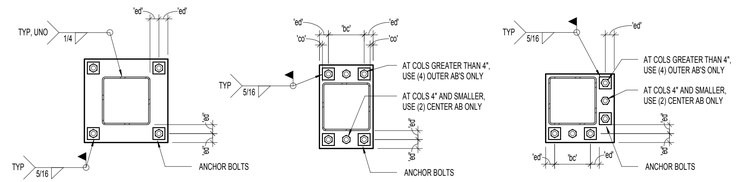

BASE PL SBP-1
SEE STL COL NOTES THIS SHEET

BASE PL SBP-2
SEE STL COL NOTES THIS SHEET

BASE PL SBP-3
SEE STL COL NOTES THIS SHEET

STEEL COLUMN NOTES:

1. ALL ANCHOR BOLTS SHALL BE ASTM F1554 GRADE 105. UNLESS NOTED OTHERWISE, ALL COLUMNS SHALL BE INSTALLED WITH HEADED (OR DOUBLE NUT) ANCHOR BOLTS. PROJECT ANCHOR BOLTS 4" MINIMUM ABOVE THE TOP OF THE BASE PLATE. ALL BOLTS SHALL BE INSTALLED WITH HARDENED WASHERS BENEATH THE NUT.
2. ANCHOR BOLTS SHALL NOT BE WELDED (INCLUDING TACK WELDS).
3. IF DESIRED SPLICE LOCATIONS DIFFER FROM THOSE LEVELS SHOWN ON PLAN, NOTIFY STRUCTURAL ENGINEER PRIOR TO FABRICATION. WRITTEN APPROVAL REQUIRED.
4. ALL CAP PLATE BOLTS SHALL BE 3/4"Ø A325N BOLTS, TYPICAL UNLESS NOTED OTHERWISE.
5. SEE GENERAL STRUCTURAL NOTES FOR OTHER REQUIREMENTS.
6. ERECTION AIDS TO BE REMOVED AFTER COLUMN SPLICING.
7. FOR HSS14x14 AND HSS16x16 COLUMNS, ANCHOR BOLTS SHOULD BE 1" DIAMETER WITH 12" EMBEDS W/ 3/8"x3" PLATE WASHERS. FOR HSS 12x12 COLUMNS OR SMALLLER, ANCHOR BOLTS SHOULD BE 3/4"Ø WITH 9" EMBEDS WITH 1/4"x2" PLATE WASHERS. FOR HSS9x9 COLUMNS OR SMALLER HSS COLUMNS, ASTM F1554 GRADE 36 RODS MAY BE SUBSTITUTED.
8. OVERSIZED HOLES MAY BE USED IN BASE PLATES PROVIDED THEY DO NOT EXCEED THE FOLLOWING SIZES:
   - 3/4"Ø BOLT ≤ 1 5/16"Ø
   - 1"Ø BOLT ≤ 1 3/4"Ø
   - 1 1/4" Ø BOLT ≤ 2"Ø
   - 1 1/2"Ø BOLT ≤ 2 1/4"Ø
9. HOLES IN PLATE WASHERS SHOULD BE 1/16" GREATER THAN BOLT DIMENSION.

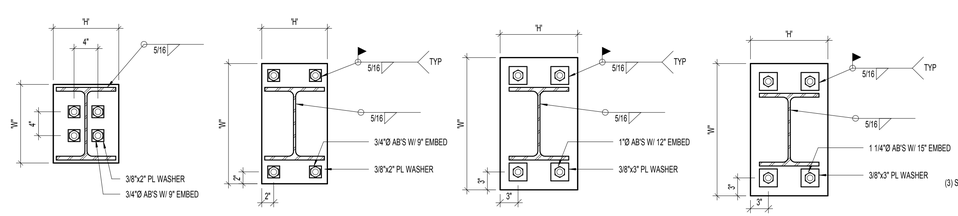

BASE PL SBP-4

BASE PL SBP-5
FOR WIDE FLANGE COLUMNS < 70 pif

BASE PL SBP-6
FOR WIDE FLANGE COLUMNS ≥ 70 pif BUT < 130 pif

BASE PL SBP-7
FOR WIDE FLANGE COLUMNS ≥ 130 pif BUT < 200 pif

GRAVITY COLUMN SPLICE

HSS COLUMN SPLICE

BASE PL LEGEND:

'co' = 1/2" MINIMUM
'ed' = 2" MINIMUM
'bc' = 3" MINIMUM

CAP PL LEGEND:

'co' = 1/2" MINIMUM
'ed' = 1 1/2" MINIMUM
'bc' = BEAM OR GIRDER GAGE
'w' = BEAM OR GIRDER GAGE + 3"
OR
BEAM OR GIRDER FLANGE WIDTH + 1"
OR
COLUMN WIDTH + 1"
WHICHEVER IS GREATER

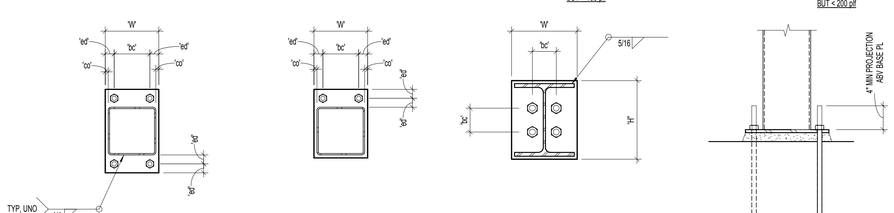

CAP PL SCP-1

CAP PL SCP-2

CAP PL SCP-3

BASE PL ELEVATION

PARTIAL PENETRATION GROOVE WIDTH	
THICKNESS OF THINNER FLANGE JOINED	(A) EFFECTIVE WELD SIZE
OVER 1/2 TO 3/4 INCL	1/4
OVER 3/4 TO 1 1/2, INCL	5/16
OVER 1 1/2 TO 2 1/4, INCL	3/8
OVER 2 1/4 TO 6, INCL	1/2
OVER 6	5/8
FOR LESS THAN 1/2 USE COMPLETE JOINT PENETRATION WELD	

APRIL 21, 2014
BID SET

NOTE:
THESE STRUCTURAL DRAWINGS ARE BASED ON ARCHITECTURAL DRAWINGS DATED APRIL 10, 2014

DIMENSIONS AND ELEVATIONS, AS THEY RELATE TO THE BUILDING IN GENERAL, i.e. GRID TO GRID DIMENSIONS OR DECK BEARING ELEVATIONS, ARE SUPPLIED BY THE ARCHITECT. THEY ARE PROVIDED ON THE STRUCTURAL PLANS AND DETAILS FOR THE CONVENIENCE OF THE CONTRACTOR. VERIFY DIMENSIONS AND ELEVATIONS WITH ARCHITECTURAL DRAWINGS.

A1 / S304 STEEL COLUMN SCHEDULE FOR SEISMIC DESIGN CATEGORIES C THRU F
NO SCALE:

CRSA
649 E. South Temple
Salt Lake City, UT 84102
801.355.5915

MWL
11798 N. Lakeridge Pkwy.
Ashland, VA 23005
804-228-7473

State of Utah
Department of Administrative Services
Division of Facilities Construction & Management
4110 State Office Building
Salt Lake City, Utah 84114
Phone: (801) 538 - 3018
Fax: (801) 538 - 3267

DIVISION OF FACILITIES CONSTRUCTION AND MANAGEMENT
REVIEWED FOR CODE COMPLIANCE
SIGNATURE: Ernie Cate
DATE: 08-05-2014

PROFESSIONAL STRUCTURAL ENGINEER
No. 295747
TAIT A. KETCHAM
04/21/2014
STATE OF UTAH

ARCHITECT-ENGINEER STAMP

Unified State Laboratory Module 2

4451 South 2700 West, Taylorsville, UT 84118

DFCM #: 13020300
Project #: 13062

DATE:	ISSUE TYPE:
APRIL 21, 2014	BID SET
CHECKED BY	TAK
DRAWN BY	SJS

SCHEDULES

DUNN
DUNN ASSOCIATES, INC
Consulting Structural Engineers
WWW.DUNN-SE.COM
PH: 801-575-8877 FAX: 801-575-8875

S304

VOLUME 1

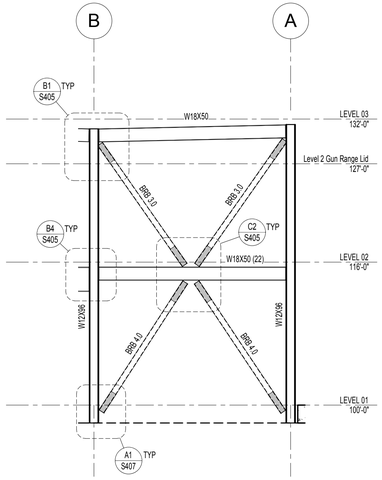

C1 S401 BRACED FRAME ELEVATION - GRID 9 (BETWEEN GRIDS A AND B)
SCALE: 1/8" = 1'-0"

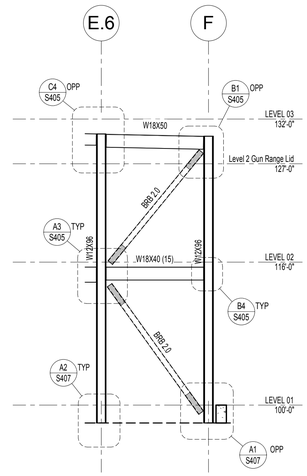

C2 S401 BRACED FRAME ELEVATION - GRID 13 (BETWEEN GRIDS E AND F)
SCALE: 1/8" = 1'-0"

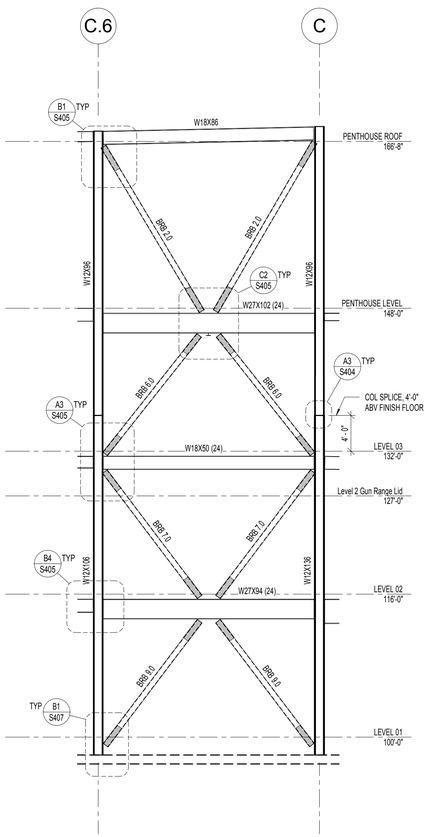

A1 S401 BRACED FRAME ELEVATION - GRID 9 (BETWEEN GRIDS C AND D)
SCALE: 1/8" = 1'-0"

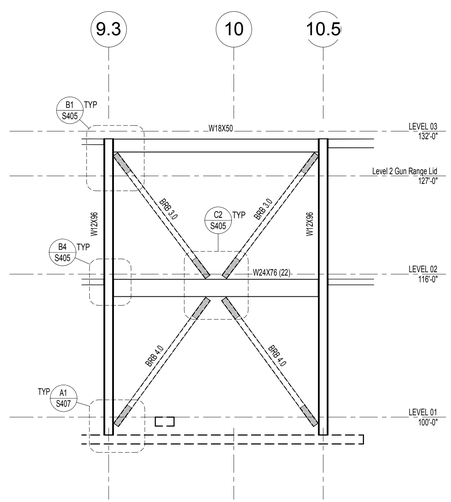

A2 S401 BRACED FRAME ELEVATION - GRID A.5
SCALE: 1/8" = 1'-0"

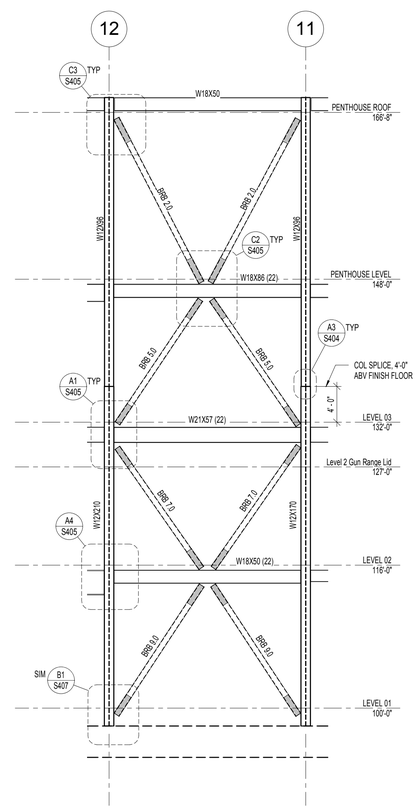

A3 S401 BRACED FRAME ELEVATION - GRID C (BETWEEN GRIDS 11 AND 12)
SCALE: 1/8" = 1'-0"

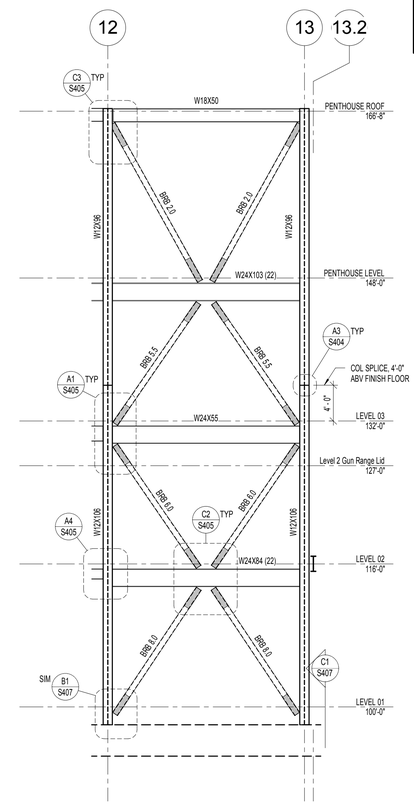

A4 S401 BRACED FRAME ELEVATION - GRID E (BETWEEN GRIDS 12 AND 13)
SCALE: 1/8" = 1'-0"

BRACED FRAME NOTES

1. ALL FRAME BMS AT CONC FLRS TO HAVE 3/4"Ø x 5" HSA AT 12"oc ADDED TO TOP FLANGE
2. ALL BRB CONN AND GUSSETS TO BE DESIGNED AND DET BY BRB SUPPLIER, SEE DEFERRED SUBMITTALS ON (S102)

INDICATES PROTECTED ZONE:
PROTECTED ZONES FOR BRB FRAMES ARE GUSSET PLS AND BRB STL CORES. ANY ATTACHMENT TO BRB's SHOULD BE APPROVED BY THE ENGR OF RECORD AND THE BRB SUPPLIER. SEE DET (1/S405) FOR LIMITS OF PROTECTED ZONE OF MOMENT FRAMES. WELDED, BOLTED SCREWED OR SHOT IN ATTACHMENTS FOR PERIMETER EDGE ANGLE, EXT FACADES, PARTITIONS, DUCTWORK, PIPING, OR OTHER CONST SHALL NOT BE PLACED IN PROTECTED ZONES.

ELEVATION NOTES

1. ALL MEMBERS SIZED ON THIS SHEET ARE PART OF THE MOMENT FRAME. SEE GENERAL STRUCTURAL NOTES AND SPECIFIED DETAILS FOR MORE INFORMATION.
2. WHERE POSSIBLE COORDINATE FULL HEIGHT WEB STIFFENERS WITH PERPENDICULAR BEAM CONNECTIONS. SEE (C5/S404).
3. ALL MOMENT FRAME BEAM TO COLUMN CONNECTIONS ARE REDUCED BEAM CONNECTIONS, SEE SCHEDULE / DETAIL (B1/S404).
4. PROVIDE 3/4"Ø x 0'-5" HSA AT 12"oc TYPICAL AT MOMENT FRAME BEAMS, UNLESS NOTED OTHERWISE.

ELEVATION NOTES

SECTION MARK
SHEET NUMBER

X — SIZE INDICATES CONTINUITY PL THICKNESS
X — SIZE INDICATES WEB DOUBLER PL THICKNESS

APRIL 21, 2014
BID SET

NOTE:
THESE STRUCTURAL DRAWINGS ARE BASED ON ARCHITECTURAL DRAWINGS DATED APRIL 10, 2014

DIMENSIONS AND ELEVATIONS, AS THEY RELATE TO THE BUILDING IN GENERAL, i.e. GRID TO GRID DIMENSIONS OR DECK BEARING ELEVATIONS, ARE SUPPLIED BY THE ARCHITECT. THEY ARE PROVIDED ON THE STRUCTURAL PLANS AND DETAILS FOR THE CONVENIENCE OF THE CONTRACTOR. VERIFY DIMENSIONS AND ELEVATIONS WITH ARCHITECTURAL DRAWINGS.

DUNN ASSOCIATES, INC
Consulting Structural Engineers
WWW.DUNN-SE.COM
PH: 801-575-8877 FAX: 801-575-8875

CRSA
649 E. South Temple
Salt Lake City, UT 84102
801.355.5915

MWL
11798 N. Lakeridge Pkwy.
Ashland, VA 23005
804-228-7473

State of Utah
Department of Administrative Services
Division of Facilities Construction & Management
4110 State Office Building
Salt Lake City, Utah 84114
Phone: (801) 538 - 3018
Fax: (801) 538 - 3267

DIVISION OF FACILITIES CONSTRUCTION AND MANAGEMENT
REVIEWED FOR CODE COMPLIANCE
SIGNATURE: Ernie Cate
DATE: 08-05-2014

PROFESSIONAL STRUCTURAL ENGINEER
No. 295747
TAIT A. KETCHAM
04/21/2014
STATE OF UTAH

ARCHITECT-ENGINEER STAMP

Unified State Laboratory Module 2

4451 South 2700 West, Taylorsville, UT 84118

DFCM #:	13020300
Project #:	13062
DATE:	ISSUE TYPE:
APRIL 21, 2014	BID SET
CHECKED BY	TAK
DRAWN BY	SJS

ELEVATIONS

S401

VOLUME 1

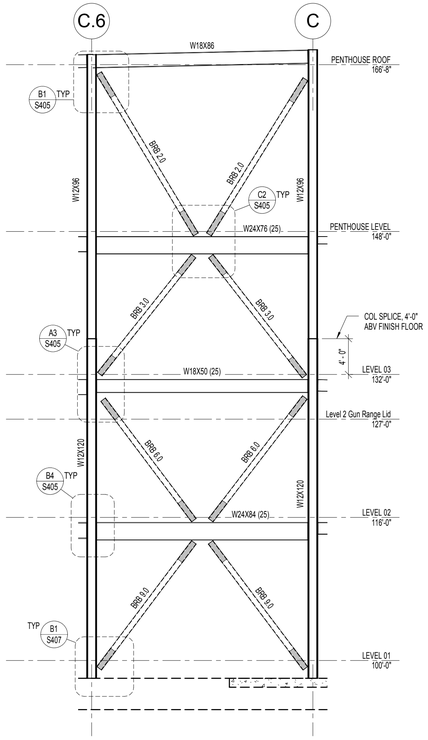

C1 BRACED FRAME ELEVATION - GRID 13 (BETWEEN GRIDS C AND C.7)
S402 SCALE: 1/8" = 1'-0"

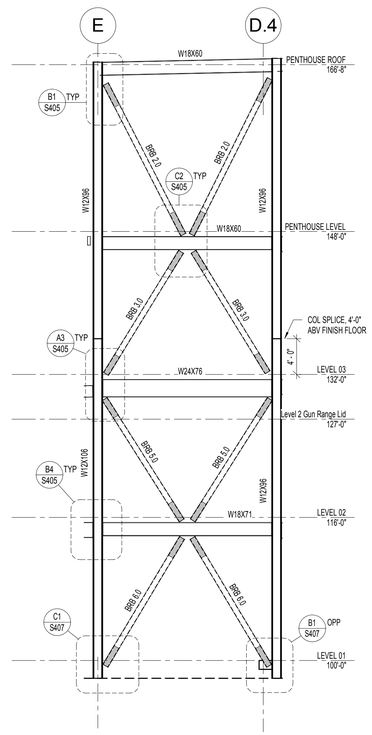

C2 BRACED FRAME ELEVATION - GRID 13 (BETWEEN GRIDS D AND E)
S402 SCALE: 1/8" = 1'-0"

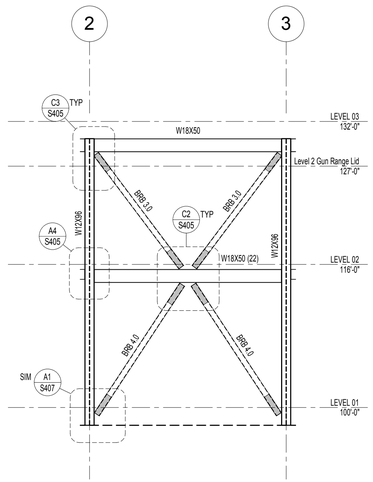

C3 BRACED FRAME ELEVATION - GRID F (BETWEEN GRIDS 2 AND 3)
S402 SCALE: 1/8" = 1'-0"

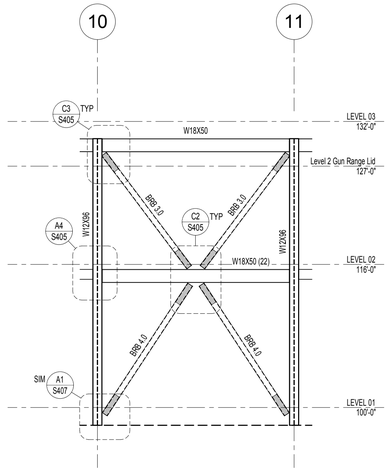

C4 BRACED FRAME ELEVATION - GRID F (BETWEEN GRIDS 10 AND 11)
S402 SCALE: 1/8" = 1'-0"

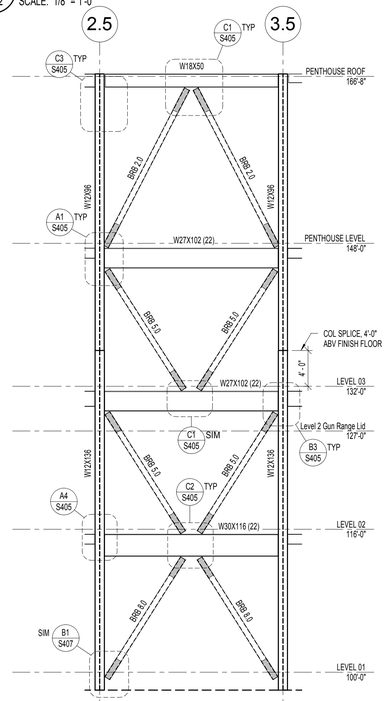

A1 BRACED FRAME ELEVATION - GRID E (BETWEEN GRIDS 2 AND 3)
S402 NO SCALE:

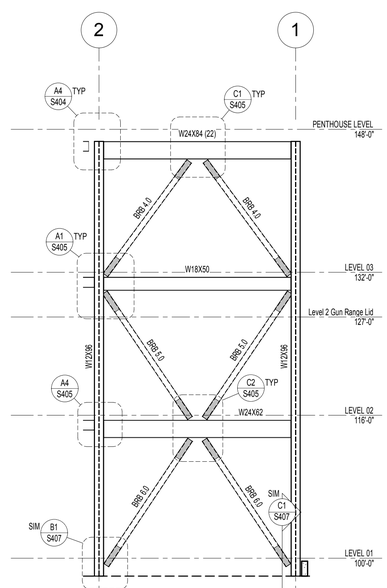

A2 BRACED FRAME ELEVATION - GRID C (BETWEEN GRIDS 1 AND 2)
S402 NO SCALE:

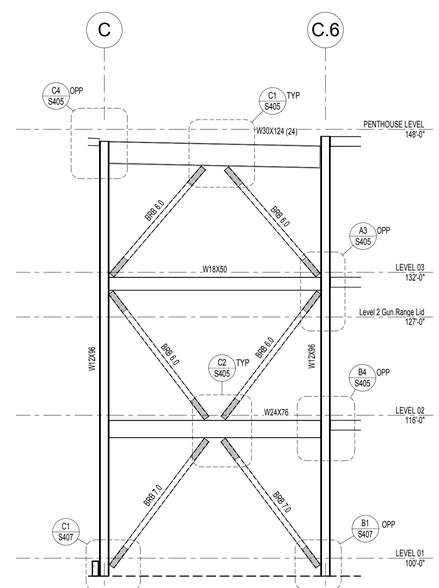

A3 BRACED FRAME ELEVATION - GRID 1 (BETWEEN GRIDS C AND D)
S402 NO SCALE:

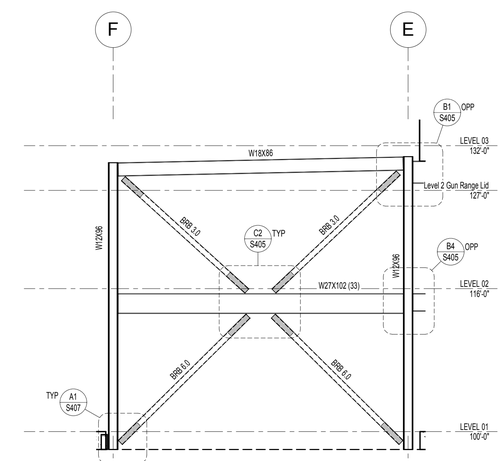

A4 BRACED FRAME ELEVATION - GRID 1 (BETWEEN GRIDS E AND F)
S402 NO SCALE:

BRACED FRAME NOTES

1. ALL FRAME BMS AT CONC FLRS TO HAVE 3/4"Ø x 5" HSA AT 12"oc ADDED TO TOP FLANGE
2. ALL BRB CONN AND GUSSETS TO BE DESIGNED AND DET BY BRB SUPPLIER, SEE DEFERRED SUBMITTALS ON (S102)

INDICATES PROTECTED ZONE:
PROTECTED ZONES FOR BRB FRAMES ARE GUSSET PLS AND BRB STL CORES. ANY ATTACHMENT TO BRB's SHOULD BE APPROVED BY THE ENGR OF RECORD AND THE BRB SUPPLIER. SEE DET (11S405) FOR LIMITS OF PROTECTED ZONE OF MOMENT FRAMES. WELDED, BOLTED SCREWED OR SHOT IN ATTACHMENTS FOR PERIMETER EDGE ANGLE, EXT FACADES, PARTITIONS, DUCTWORK, PIPING, OR OTHER CONST SHALL NOT BE PLACED IN PROTECTED ZONES.

ELEVATION NOTES

1. ALL MEMBERS SIZED ON THIS SHEET ARE PART OF THE MOMENT FRAME. SEE GENERAL STRUCTURAL NOTES AND SPECIFIED DETAILS FOR MORE INFORMATION.
2. WHERE POSSIBLE COORDINATE FULL HEIGHT WEB STIFFENERS WITH PERPENDICULAR BEAM CONNECTIONS. SEE (C5/S404).
3. ALL MOMENT FRAME BEAM TO COLUMN CONNECTIONS ARE REDUCED BEAM CONNECTIONS, SEE SCHEDULE / DETAIL (B1/S404).
4. PROVIDE 3/4"Ø x 0'-5" HSA AT 12"oc TYPICAL AT MOMENT FRAME BEAMS, UNLESS NOTED OTHERWISE.

ELEVATION NOTES

SECTION MARK
SHEET NUMBER

X SIZE INDICATES CONTINUITY PL THICKNESS
X SIZE INDICATES WEB DOUBLER PL THICKNESS

APRIL 21, 2014
BID SET

NOTE:
THESE STRUCTURAL DRAWINGS ARE BASED ON ARCHITECTURAL DRAWINGS DATED APRIL 10, 2014

DIMENSIONS AND ELEVATIONS, AS THEY RELATE TO THE BUILDING IN GENERAL, i.e. GRID TO GRID DIMENSIONS OR DECK BEARING ELEVATIONS, ARE SUPPLIED BY THE ARCHITECT. THEY ARE PROVIDED ON THE STRUCTURAL PLANS AND DETAILS FOR THE CONVENIENCE OF THE CONTRACTOR. VERIFY DIMENSIONS AND ELEVATIONS WITH ARCHITECTURAL DRAWINGS.

DUNN ASSOCIATES, INC
Consulting Structural Engineers
WWW.DUNN-SE.COM
PH: 801-575-8877 FAX: 801-575-8875

CRSA
649 E. South Temple
Salt Lake City, UT 84102
801.355.5915

MWL
11798 N. Lakeridge Pkwy.
Ashland, VA 23005
804-228-7473

State of Utah
Department of Administrative Services
Division of Facilities Construction & Management
4110 State Office Building
Salt Lake City, Utah 84114
Phone: (801) 538 - 3018
Fax: (801) 538 - 3267

DIVISION OF FACILITIES CONSTRUCTION AND MANAGEMENT
REVIEWED FOR CODE COMPLIANCE
SIGNATURE:
DATE: 08-05-2014

PROFESSIONAL STRUCTURAL ENGINEER
No. 295747
TAIT A. KETCHAM
04/21/2014
STATE OF UTAH

ARCHITECT-ENGINEER STAMP

Unified State Laboratory Module 2
4451 South 2700 West,
Taylorsville, UT 84118

DFCM #:	13020300
Project #:	13062
DATE:	ISSUE TYPE:
APRIL 21, 2014	BID SET
CHECKED BY	TAK
DRAWN BY	SJS

ELEVATIONS

S402
VOLUME 1

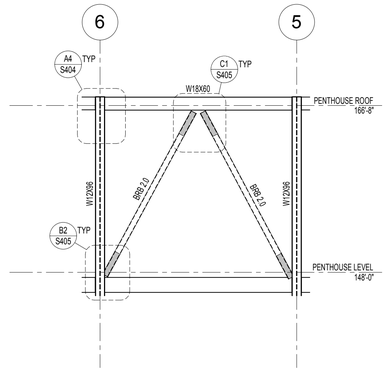

C1 S403 BRACED FRAME ELEVATION - GRID D
SCALE: 1/8" = 1'-0"

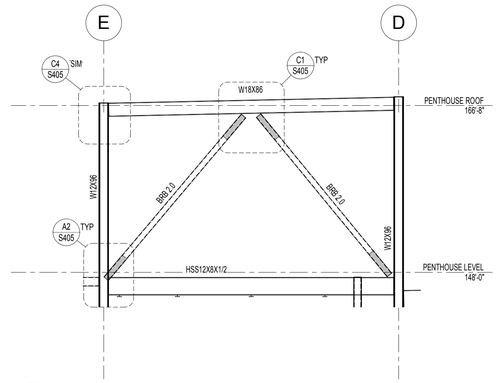

C2 S403 BRACED FRAME ELEVATION - GRID 2
SCALE: 1/8" = 1'-0"

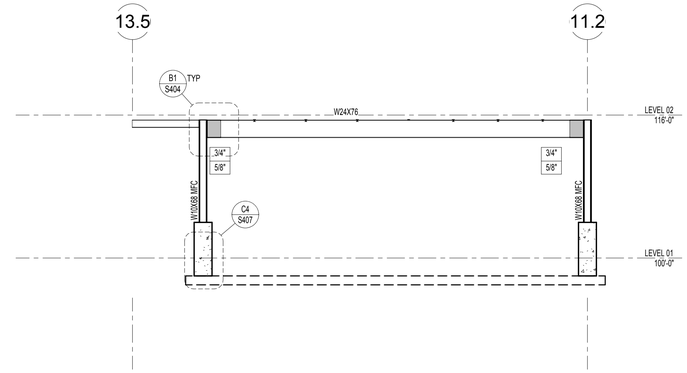

C3 S403 MOMENT FRAME ELEVATION - NORTH OF GRID 1
SCALE: 1/8" = 1'-0"

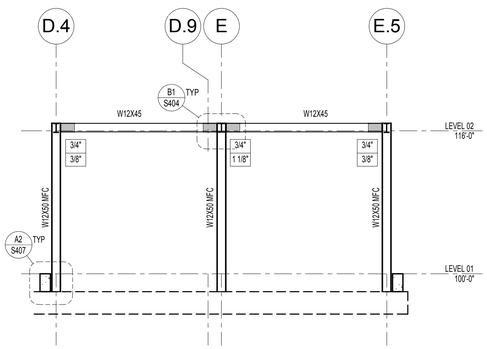

B1 S403 MOMENT FRAME ELEVATION - EAST OF GRID 13
SCALE: 1/8" = 1'-0"

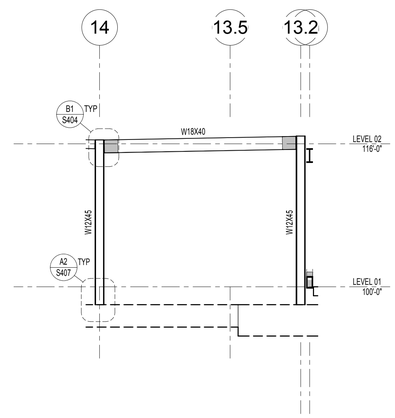

B2 S403 MOMENT FRAME ELEVATION - GRID D.4
SCALE: 1/8" = 1'-0"

BUCKLING RESTRAINED BRACED FRAME SCHEDULE

Brace Designation	Steel Core Area	Fy Minimum	Fy Maximum	Core Strength Pn kips	Maximum Beta	Maximum Omega
BRB 2.0	2.0	38	46	76	1.15	1.65
BRB 2.5	2.5	38	46	95	1.15	1.65
BRB 3.0	3.0	38	46	114	1.15	1.65
BRB 3.5	3.5	38	46	133	1.15	1.65
BRB 4.0	4.0	38	46	152	1.15	1.65
BRB 4.5	4.5	38	46	171	1.15	1.65
BRB 5.0	5.0	38	46	190	1.15	1.65
BRB 5.5	5.5	38	46	209	1.15	1.65
BRB 6.0	6.0	38	46	228	1.15	1.65
BRB 6.5	6.5	38	46	247	1.15	1.65
BRB 7.0	7.0	38	46	266	1.15	1.65
BRB 7.5	7.5	38	46	285	1.15	1.65
BRB 8.0	8.0	38	46	304	1.15	1.65
BRB 8.5	8.5	38	46	323	1.15	1.65
BRB 9.0	9.0	38	46	342	1.15	1.65

NOTES:

STIFFNESS RATIO: RATIO OF TOTAL BRACE AND CONNECTION STIFFNESS WP TO WP BRACE STIFFNESS IF CORE OCCURS WP TO WP.
CORE STRENGTH: Fy MINIMUM x STEEL CORE AREA
BETA: MAXIMUM COMPRESSIVE FORCE TO TENSION FORCE RATIO.
OMEGA: MAXIMUM TENSION FORCE TO YIELD FORCE RATIO.
BRB's BETWEEN PENTHOUSE LEVEL AND PENTHOUSE HAVE A MINIMUM STIFFNESS RATIO OF 1.30.
BRB's BETWEEN THE 2ND LEVEL AND THE PENTHOUSE LEVEL HAVE A MINIMUM STIFFNESS RATIO OF 1.40.
BRB's BETWEEN THE 1ST LEVEL AND THE 2ND LEVEL HAVE A MINIMUM STIFFNESS RATIO OF 1.45.

B3 S403 BUCKLING RESTRAINED BRACED FRAME SCHEDULE
NO SCALE:

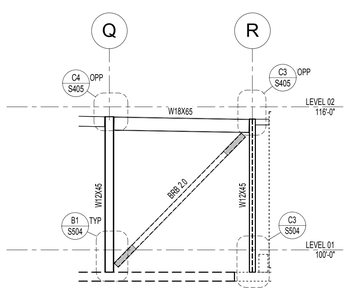

A1 S403 BRACED FRAME ELEVATION - GRID 1E
SCALE: 1/8" = 1'-0"

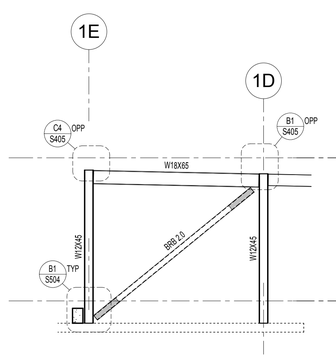

A2 S403 BRACED FRAME ELEVATION - GRID R
SCALE: 1/8" = 1'-0"

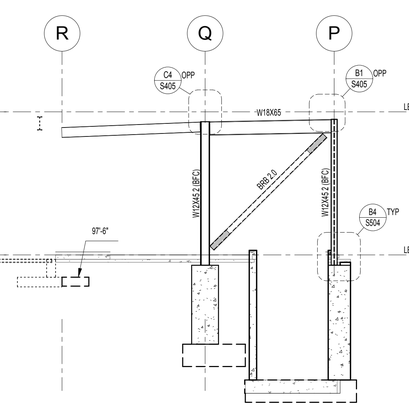

A3 S403 BRACED FRAME ELEVATION - GRID E1I
SCALE: 1/8" = 1'-0"

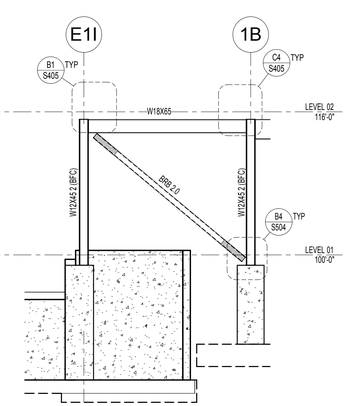

A4 S403 BRACED FRAME ELEVATION - GRID EQ
NO SCALE:

APRIL 21, 2014
BID SET

NOTE:
THESE STRUCTURAL DRAWINGS ARE BASED ON ARCHITECTURAL DRAWINGS DATED APRIL 10, 2014

DIMENSIONS AND ELEVATIONS, AS THEY RELATE TO THE BUILDING IN GENERAL, i.e. GRID TO GRID DIMENSIONS OR DECK BEARING ELEVATIONS, ARE SUPPLIED BY THE ARCHITECT. THEY ARE PROVIDED ON THE STRUCTURAL PLANS AND DETAILS FOR THE CONVENIENCE OF THE CONTRACTOR. VERIFY DIMENSIONS AND ELEVATIONS WITH ARCHITECTURAL DRAWINGS.

DUNN ASSOCIATES, INC
Consulting Structural Engineers
WWW.DUNN-SE.COM
PH: 801-575-8877 FAX: 801-575-8875

CRSA
649 E. South Temple
Salt Lake City, UT 84102
801.355.5915

MWL
11798 N. Lakeridge Pkwy.
Ashland, VA 23005
804-228-7473

State of Utah
Department of Administrative Services
Division of Facilities Construction & Management
4110 State Office Building
Salt Lake City, Utah 84114
Phone: (801) 538 - 3018
Fax: (801) 538 - 3267

DIVISION OF FACILITIES CONSTRUCTION AND MANAGEMENT
REVIEWED FOR CODE COMPLIANCE
SIGNATURE:
DATE: 08-05-2014

PROFESSIONAL STRUCTURAL ENGINEER
No. 295747
TAIT A. KETCHAM
04/21/2014
STATE OF UTAH

ARCHITECT-ENGINEER STAMP

Unified State Laboratory Module 2

4451 South 2700 West, Taylorsville, UT 84118

DFCM #:	13020300
Project #:	13062
DATE:	ISSUE TYPE:
APRIL 21, 2014	BID SET
CHECKED BY	TAK
DRAWN BY	SJS

ELEVATIONS

S403

VOLUME 1

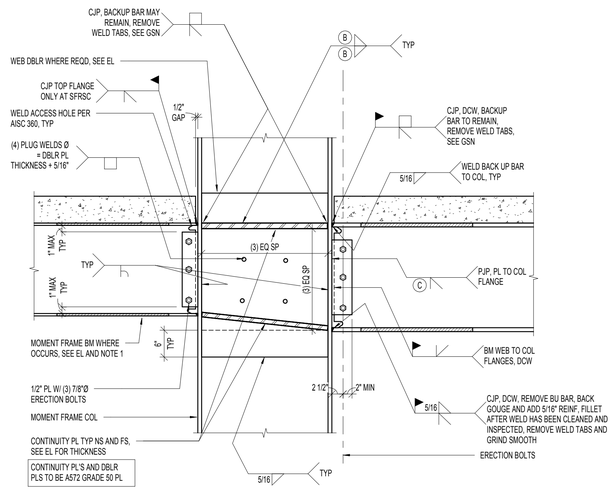

MOMENT CONNECTION WHERE COLUMN CONTINUES UP

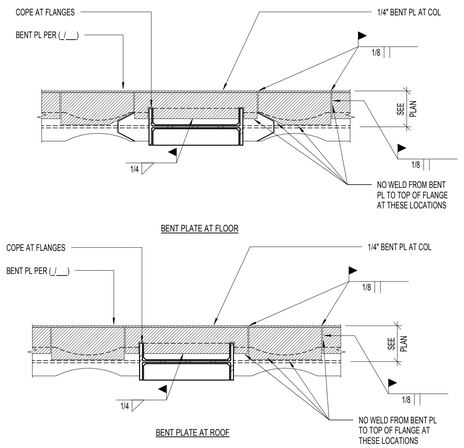

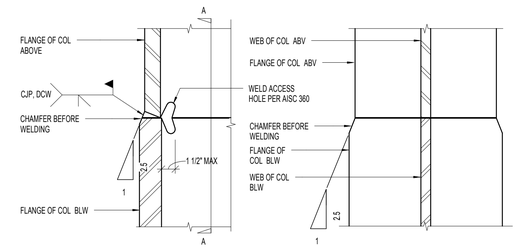

C4 / S404 TRANSITION DETAIL
NO SCALE:

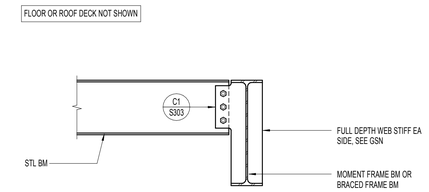

C5 / S404 TYPICAL STEEL BEAM TO MOMENT FRAME AND BRACED FRAME BEAM CONNECTION
NO SCALE:

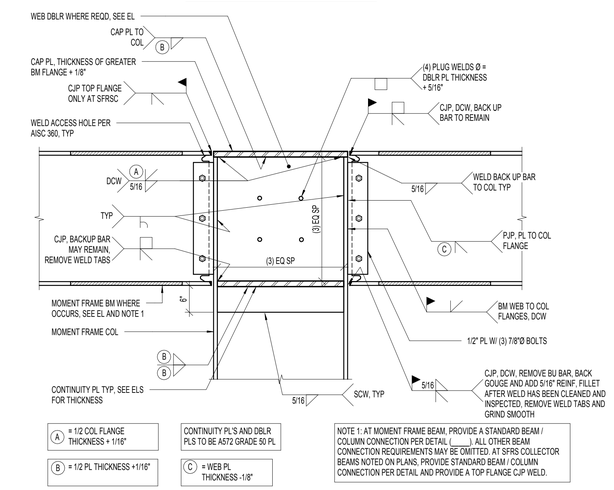

MOMENT CONNECTION AT TOP OF COLUMN

B1 / S404 RADIUS CUT REDUCED BEAM SECTION MOMENT FRAME CONNECTIONS
NO SCALE:

BEAM	DIMENSIONS			
	a (IN)	b (IN) APPROX	c (IN)	RADIUS
W12x45	4.25	8	1	8.5
W18x40	3.25	11.75	0.75	23.4
W24x76	4.5	15.75	1.25	25.4

NOTES:
1. COPE TOP AND BOTT BM FLANGES IN CIRCULAR ARC AS SHOWN. CUT EDGE TO BE GROUND SMOOTH W/ GRINDING PARALLEL TO FLANGE. SEE GSN, ALL SHOP DRAWINGS TO CLEARLY NOTE FINISH REQUIREMENTS.
2. CONSTRUCTION SEQUENCE:
   A. SNUG TIGHTEN ERECTION BOLTS.
   B. WELD TOP AND BOTTOM BEAM FLANGES.
   C. WELD BEAM WEB.
3. CUT TOLERANCES ARE AS FOLLOWS:
   A. ± 1/4"

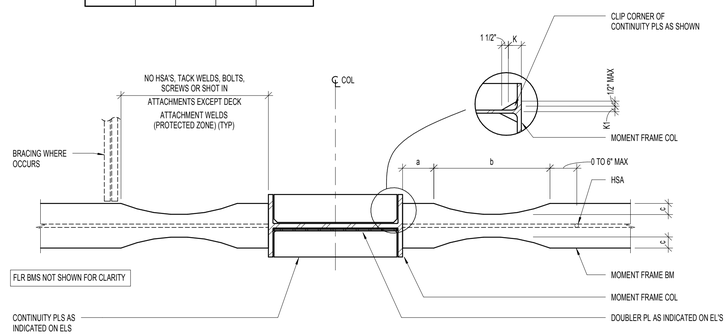

MOMENT CONNECTION SECTIONS

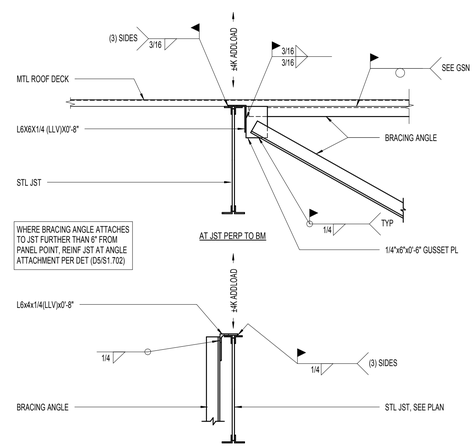

B4 / S404 MOMENT FRAME BEAM BRACE ATTACHMENT TO ADJACENT JOIST
NO SCALE:

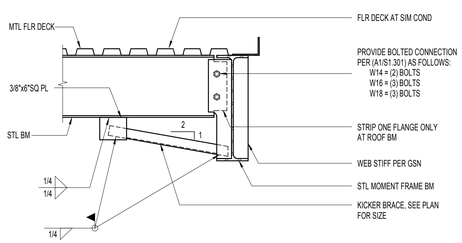

A1 / S404 BEAM WITH BRACE CONNECTION TO FRAME BEAM
NO SCALE:

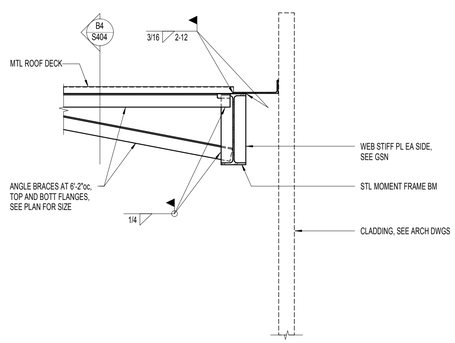

A2 / S404 FRAME BRACE AT ROOF PERPENDICULAR TO JOIST
NO SCALE:

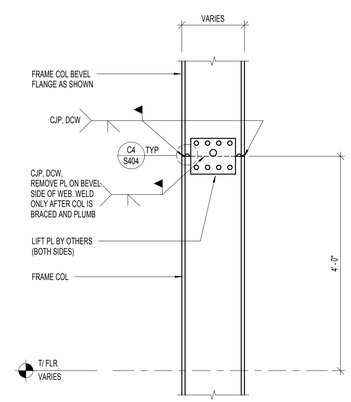

A3 / S404 TYPICAL COL SPLICE OF "W" COLS AT MOMENT AND BRACED FRAMES
NO SCALE:

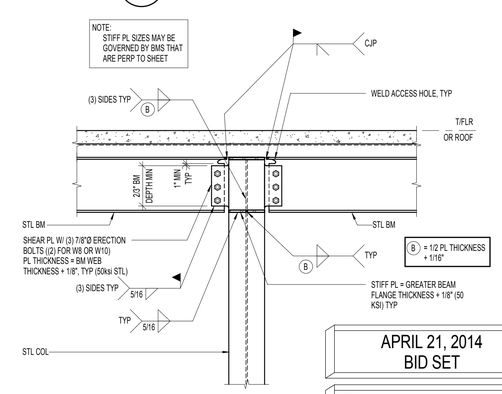

A4 / S404 DETAIL
NO SCALE:

APRIL 21, 2014
BID SET

NOTE:
THESE STRUCTURAL DRAWINGS ARE BASED ON ARCHITECTURAL DRAWINGS DATED APRIL 10, 2014

DIMENSIONS AND ELEVATIONS, AS THEY RELATE TO THE BUILDING IN GENERAL, i.e. GRID TO GRID DIMENSIONS OR DECK BEARING ELEVATIONS, ARE SUPPLIED BY THE ARCHITECT. THEY ARE PROVIDED ON THE STRUCTURAL PLANS AND DETAILS FOR THE CONVENIENCE OF THE CONTRACTOR. VERIFY DIMENSIONS AND ELEVATIONS WITH ARCHITECTURAL DRAWINGS.

DUNN ASSOCIATES, INC
Consulting Structural Engineers
WWW.DUNN-SE.COM
PH: 801-575-8877 FAX: 801-575-8875

CRSA
649 E. South Temple
Salt Lake City, UT 84102
801.355.5915

MWL
11798 N. Lakeridge Pkwy.
Ashland, VA 23005
804-228-7473

State of Utah
Department of Administrative Services
Division of Facilities Construction & Management
4110 State Office Building
Salt Lake City, Utah 84114
Phone: (801) 538 - 3018
Fax: (801) 538 - 3267

DIVISION OF FACILITIES CONSTRUCTION AND MANAGEMENT
REVIEWED FOR CODE COMPLIANCE
SIGNATURE: Ernie Gelb
DATE: 08-05-2014

PROFESSIONAL STRUCTURAL ENGINEER
No. 295747
TAIT A. KETCHAM
04/21/2014
STATE OF UTAH

ARCHITECT-ENGINEER STAMP

Unified State Laboratory Module 2
4451 South 2700 West,
Taylorsville, UT 84118

DFCM #:	13020300
Project #:	13062
DATE:	ISSUE TYPE:
APRIL 21, 2014	BID SET
CHECKED BY	TAK
DRAWN BY	SJS

MOMENT FRAME DETAILS

S404
VOLUME 1

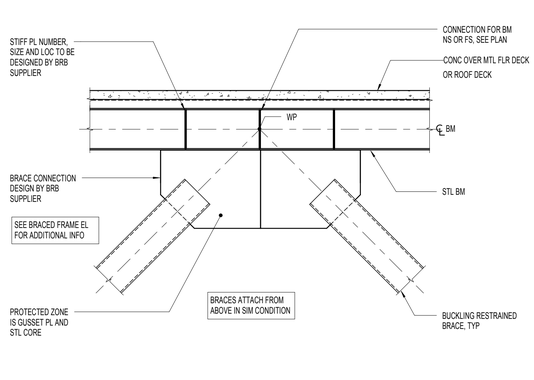

C1 S405 BRACE CONNECTION DETAIL AT INVERTED 'V'

NO SCALE:

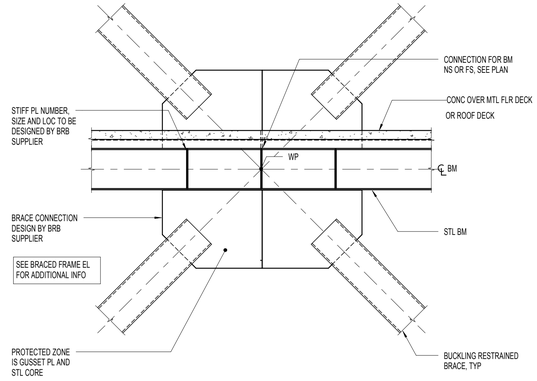

C2 S405 BRACE CONNECTION DETAIL AT "X"

NO SCALE:

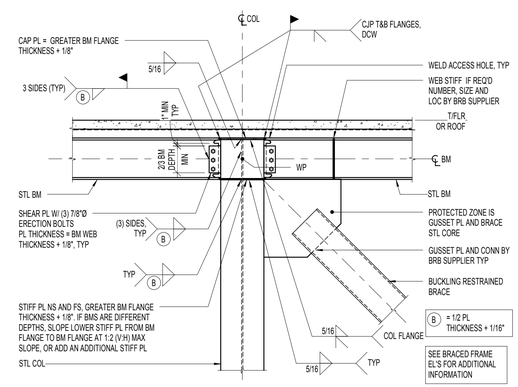

C3 S405 BRACE CONNECTION DETAIL

NO SCALE:

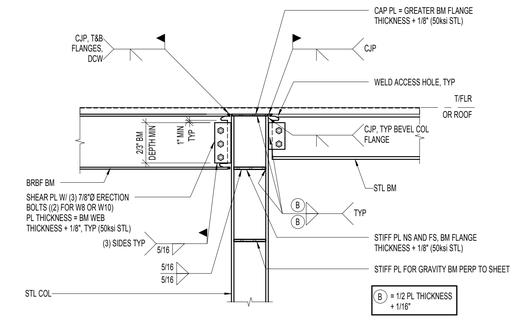

C4 S405 SFRS COLLECTOR CONNECTION DETAIL

NO SCALE:

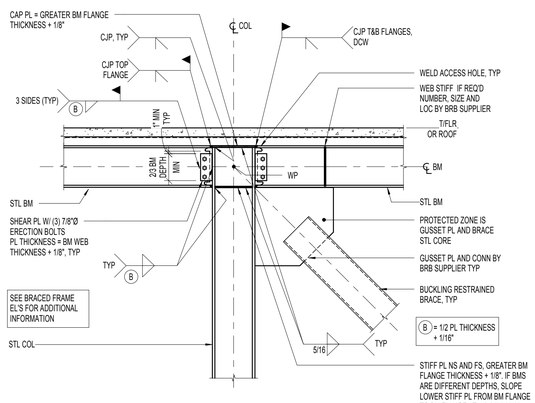

B1 S405 BRACE CONNECTION DETAIL

NO SCALE:

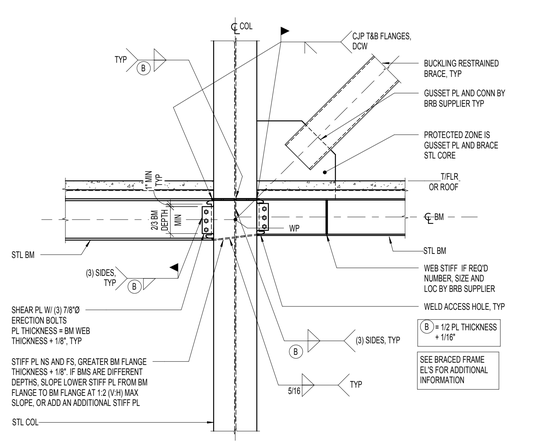

B2 S405 BRACE CONNECTION DETAIL

NO SCALE:

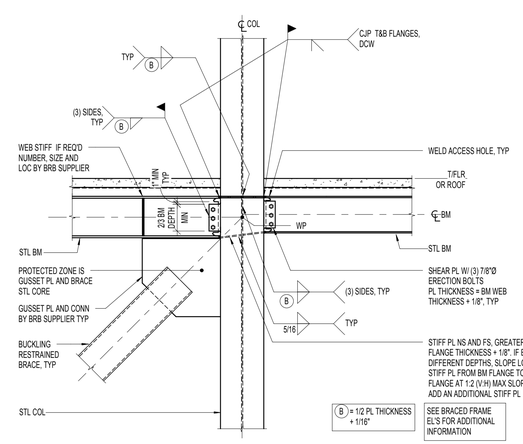

B3 S405 BRACE CONNECTION DETAIL

NO SCALE:

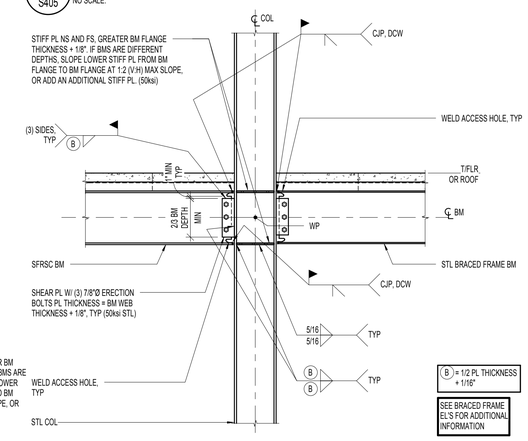

B4 S405 BRACE FRAME BEAM CONNECTION DETAIL

NO SCALE:

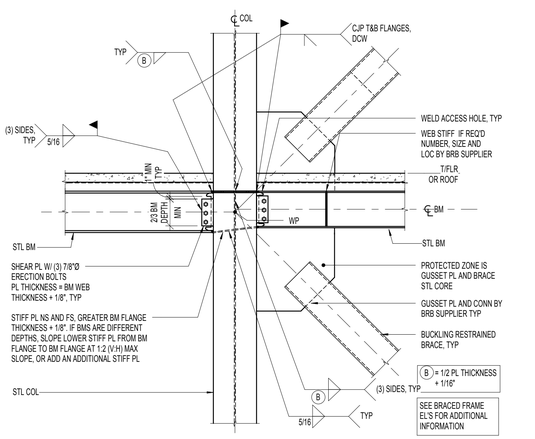

A1 S405 BRACE CONNECTION DETAIL

NO SCALE:

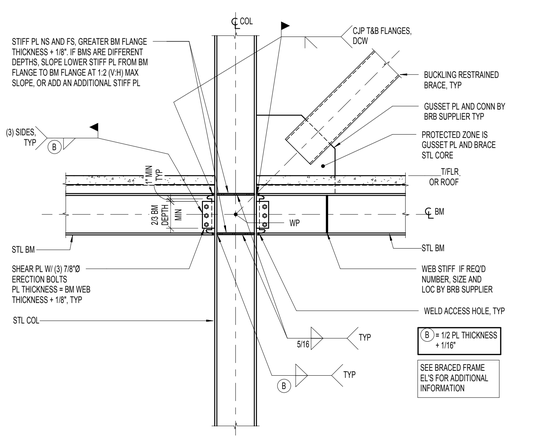

A2 S405 BRACE CONNECTION DETAIL

NO SCALE:

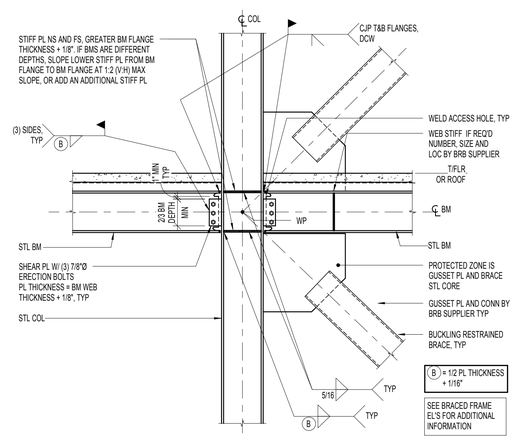

A3 S405 BRACE CONNECTION DETAIL

NO SCALE:

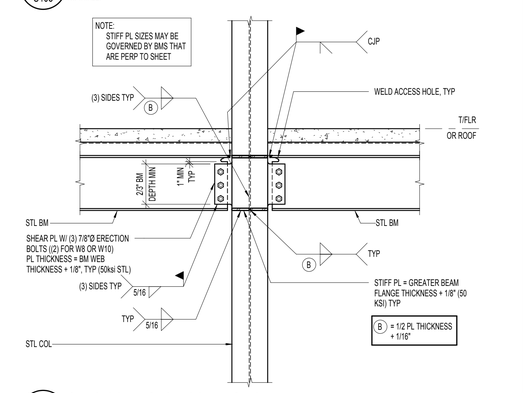

A4 S405 SFRS COLLECTOR CONNECTION DETAIL

NO SCALE:

APRIL 21, 2014
BID SET

NOTE:
THESE STRUCTURAL DRAWINGS ARE BASED ON ARCHITECTURAL DRAWINGS DATED APRIL 10, 2014

DIMENSIONS AND ELEVATIONS, AS THEY RELATE TO THE BUILDING IN GENERAL, i.e. GRID TO GRID DIMENSIONS OR DECK BEARING ELEVATIONS, ARE SUPPLIED BY THE ARCHITECT. THEY ARE PROVIDED ON THE STRUCTURAL PLANS AND DETAILS FOR THE CONVENIENCE OF THE CONTRACTOR. VERIFY DIMENSIONS AND ELEVATIONS WITH ARCHITECTURAL DRAWINGS.

DUNN ASSOCIATES, INC
Consulting Structural Engineers
WWW.DUNN-SE.COM
PH: 801-575-8877 FAX: 801-575-8875

CRSA
649 E. South Temple
Salt Lake City, UT 84102
801.355.5915

MWL
11798 N. Lakeridge Pkwy.
Ashland, VA 23005
804-228-7473

State of Utah
Department of Administrative Services
Division of Facilities Construction & Management
4110 State Office Building
Salt Lake City, Utah 84114
Phone: (801) 538 - 3018
Fax: (801) 538 - 3267

DIVISION OF FACILITIES CONSTRUCTION AND MANAGEMENT
REVIEWED FOR CODE COMPLIANCE
SIGNATURE: Ernie Cate
DATE: 08-05-2014

PROFESSIONAL STRUCTURAL ENGINEER
No. 295747
TAIT A. KETCHAM
04/21/2014
STATE OF UTAH

ARCHITECT-ENGINEER STAMP

Unified State Laboratory Module 2
4451 South 2700 West,
Taylorsville, UT 84118

DFCM #:	13020300
Project #:	13062
DATE:	ISSUE TYPE:
APRIL 21, 2014	BID SET
CHECKED BY	TAK
DRAWN BY	SJS

BRACED FRAME DETAILS

S405

VOLUME 1

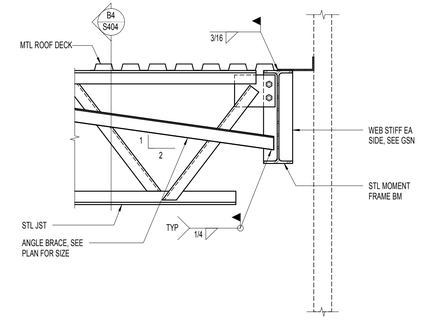

D1 S406 FRAME BRACE AT ROOF PARALLEL TO ROOF JOIST

NO SCALE:

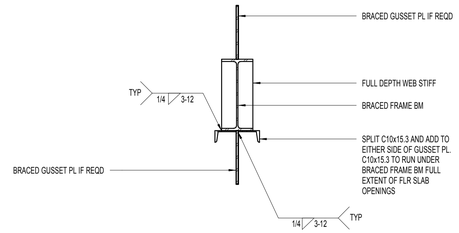

D2 S406 CHANNEL ON UNDERSIDE OF FRAME BEAM

NO SCALE:

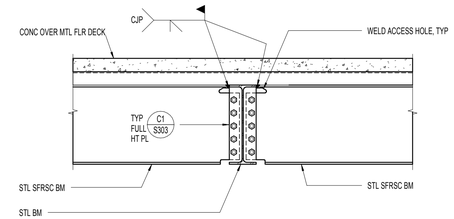

D3 S406 SFRS COLLECTOR BEAM TO BEAM CONNECTION

NO SCALE:

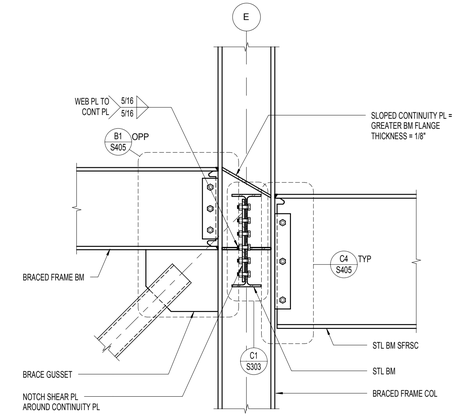

D4 S406 SFRSC CONNECTION AT STEP

NO SCALE:

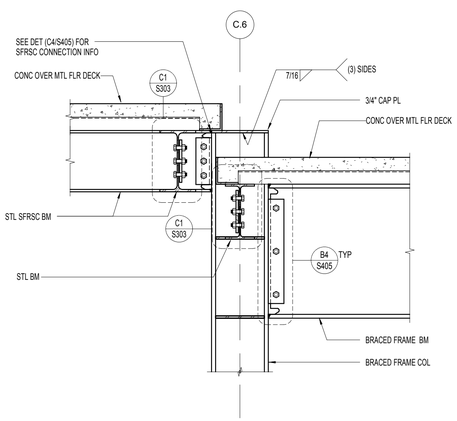

C1 S406 SFRSC CONNECTION AT STEP

NO SCALE:

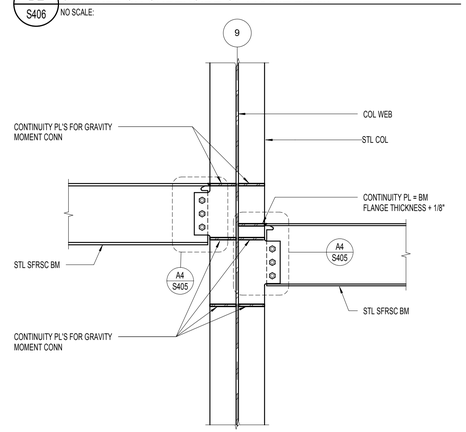

C2 S406 SFRSC CONNECTION AT STEP

NO SCALE:

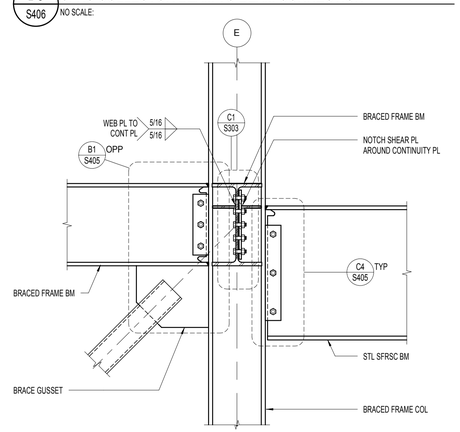

C3 S406 SFRSC CONNECTION AT STEP

NO SCALE:

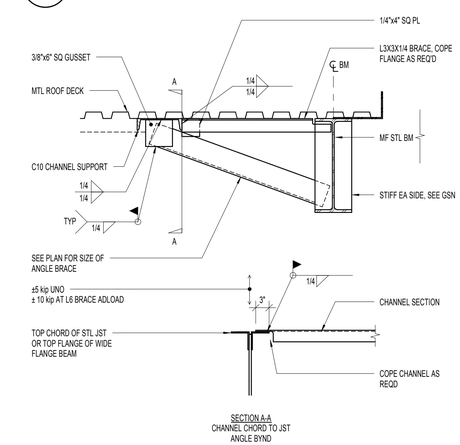

C4 S406 MOMENT FRAME BEAM BRACE

NO SCALE:

APRIL 21, 2014
BID SET

NOTE:
THESE STRUCTURAL DRAWINGS ARE BASED ON ARCHITECTURAL DRAWINGS DATED APRIL 10, 2014

DIMENSIONS AND ELEVATIONS, AS THEY RELATE TO THE BUILDING IN GENERAL, i.e. GRID TO GRID DIMENSIONS OR DECK BEARING ELEVATIONS, ARE SUPPLIED BY THE ARCHITECT. THEY ARE PROVIDED ON THE STRUCTURAL PLANS AND DETAILS FOR THE CONVENIENCE OF THE CONTRACTOR. VERIFY DIMENSIONS AND ELEVATIONS WITH ARCHITECTURAL DRAWINGS.

DUNN ASSOCIATES, INC
Consulting Structural Engineers
WWW.DUNN-SE.COM
PH: 801-575-8877 FAX: 801-575-8875

CRSA
649 E. South Temple
Salt Lake City, UT 84102
801.355.5915

MWL
11798 N. Lakeridge Pkwy.
Ashland, VA 23005
804-228-7473

State of Utah
Department of Administrative Services
Division of Facilities Construction & Management
4110 State Office Building
Salt Lake City, Utah 84114
Phone: (801) 538 - 3018
Fax: (801) 538 - 3267

DIVISION OF FACILITIES CONSTRUCTION AND MANAGEMENT
REVIEWED FOR CODE COMPLIANCE
SIGNATURE: Ernie Calle
DATE: 08-05-2014

PROFESSIONAL STRUCTURAL ENGINEER
No. 295747
TAIT A. KETCHAM
04/21/2014
STATE OF UTAH

ARCHITECT-ENGINEER STAMP

Unified State Laboratory Module 2

4451 South 2700 West, Taylorsville, UT 84118

DFCM #:	13020300
Project #:	13062
DATE:	ISSUE TYPE:
APRIL 21, 2014	BID SET
CHECKED BY	TAK
DRAWN BY	SJS

FRAME DETAILS

S406

VOLUME 1

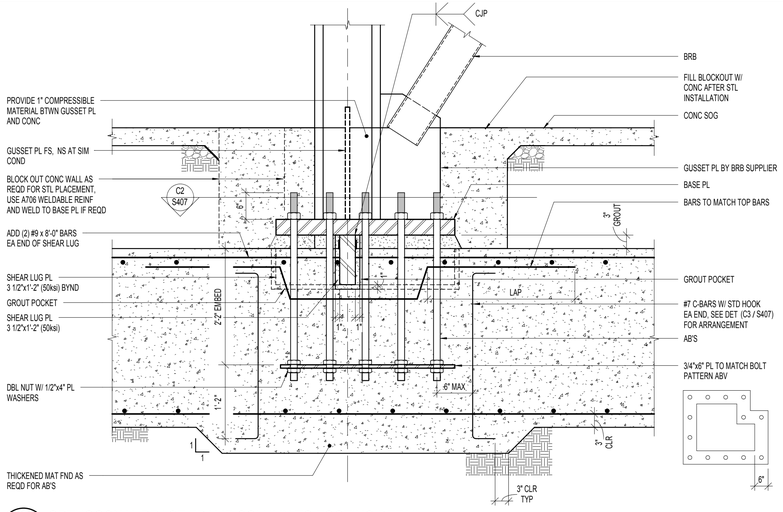

C1 S407 ORTHOGONAL BRACE FRAME COLUMN TO FOOTING DETAIL
NO SCALE:

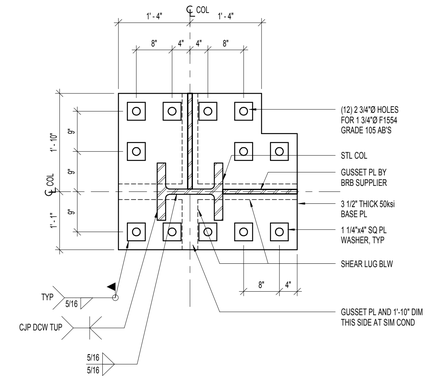

C2 S407 ORTHOGONAL COLUMN BASE PLATE
NO SCALE:

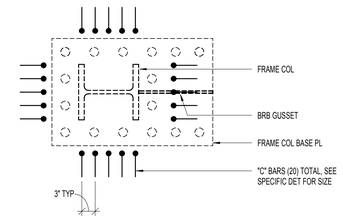

C3 S407 TYPICAL ANCHOR REINFORCING AT BRACE FRAME COLUMN BASE
NO SCALE:

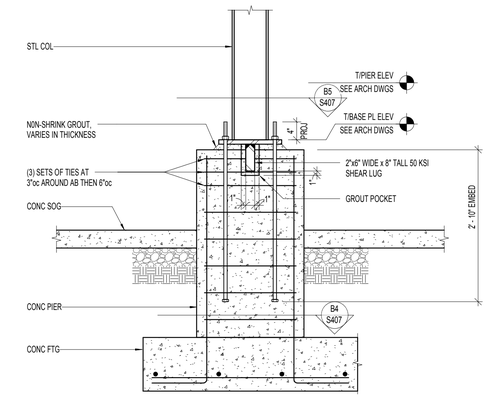

C4 S407 W8 MOMENT FRAME COLUMN TO CONCRETE FOOTING
NO SCALE:

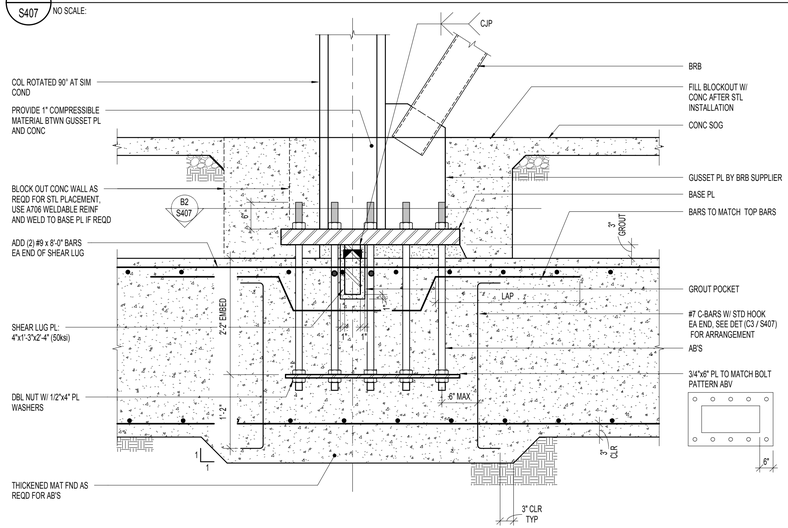

B1 S407 BRACE FRAME TO FOOTING DETAIL
NO SCALE:

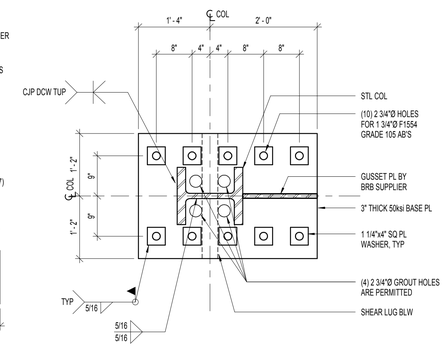

B2 S407 10 BOLT COLUMN BASE PLATE
NO SCALE:

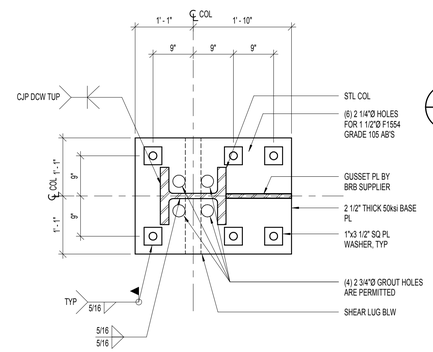

B3 S407 6 BOLT COLUMN BASE PLATE
NO SCALE:

B4 S407 CANOPY MOMENT FRAME PIER
NO SCALE:

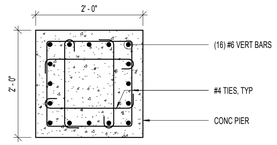

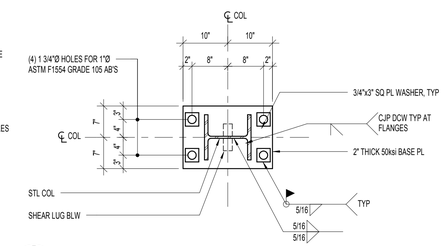

B5 S407 MOMENT FRAME COLUMN BASE PLATE AT PIER
NO SCALE:

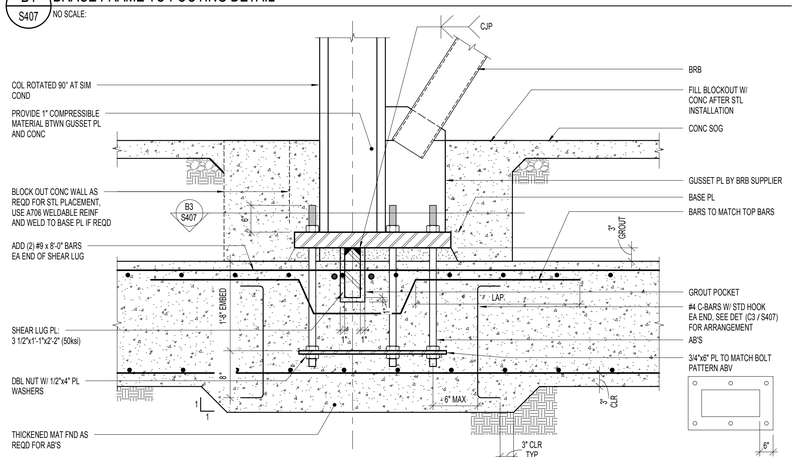

A1 S407 BRACE FRAME TO FOOTING DETAIL
NO SCALE:

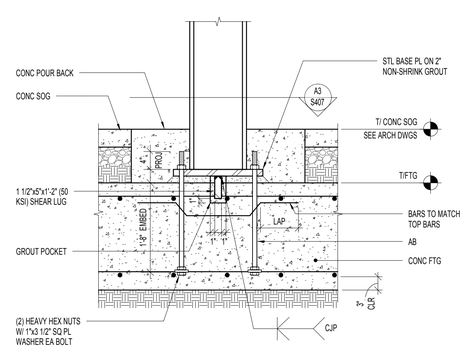

A2 S407 MOMENT FRAME COLUMN TO FOUNDATION
NO SCALE:

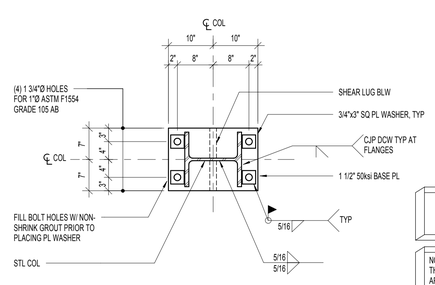

A3 S407 MOMENT FRAME COLUMN BASE PLATE
NO SCALE:

APRIL 21, 2014
BID SET

NOTE:
THESE STRUCTURAL DRAWINGS ARE BASED ON ARCHITECTURAL DRAWINGS DATED APRIL 10, 2014

DIMENSIONS AND ELEVATIONS, AS THEY RELATE TO THE BUILDING IN GENERAL, i.e. GRID TO GRID DIMENSIONS OR DECK BEARING ELEVATIONS, ARE SUPPLIED BY THE ARCHITECT. THEY ARE PROVIDED ON THE STRUCTURAL PLANS AND DETAILS FOR THE CONVENIENCE OF THE CONTRACTOR. VERIFY DIMENSIONS AND ELEVATIONS WITH ARCHITECTURAL DRAWINGS.

DUNN ASSOCIATES, INC
Consulting Structural Engineers
WWW.DUNN-SE.COM
PH: 801-575-8877 FAX: 801-575-8875

CRSA
649 E. South Temple
Salt Lake City, UT 84102
801.355.5915

MWL
11798 N. Lakeridge Pkwy.
Ashland, VA 23005
804-228-7473

State of Utah
Department of Administrative Services
Division of Facilities Construction & Management
4110 State Office Building
Salt Lake City, Utah 84114
Phone: (801) 538 - 3018
Fax: (801) 538 - 3267

DIVISION OF FACILITIES CONSTRUCTION AND MANAGEMENT
REVIEWED FOR CODE COMPLIANCE
SIGNATURE: Ernie Calle
DATE: 08-05-2014

PROFESSIONAL STRUCTURAL ENGINEER
No. 295747
TAIT A. KETCHAM
04/28/2014
STATE OF UTAH

ARCHITECT-ENGINEER STAMP

Unified State Laboratory Module 2
4451 South 2700 West,
Taylorsville, UT 84118

DFCM #:	13020300
Project #:	13062

DATE:	ISSUE TYPE:
APRIL 21, 2014	BID SET
CHECKED BY	TAK
DRAWN BY	SJS

FRAME DETAILS

S407
VOLUME 1

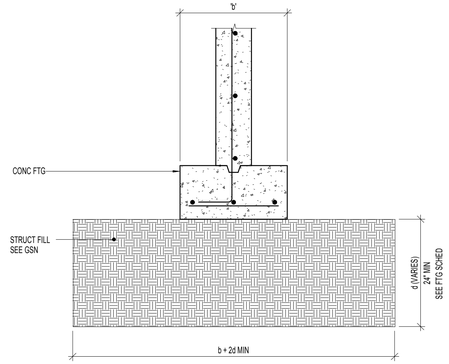

C1 S501 TYPICAL COMPACTED STRUCTURAL FILL
NO SCALE:

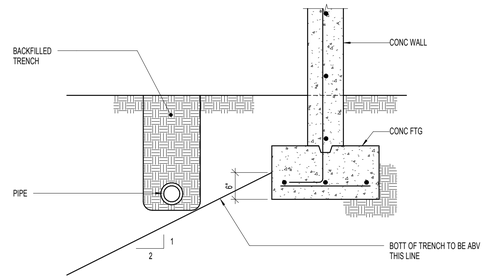

C2 S501 TYPICAL PIPE PARALLEL TO FOOTING
NO SCALE:

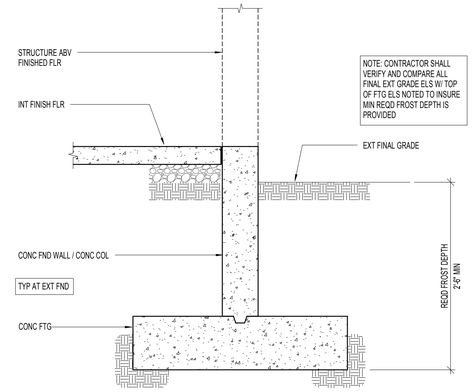

C3 S501 TYPICAL FOOTING DEPTH DETAIL FOR FROST PROTECTION
NO SCALE:

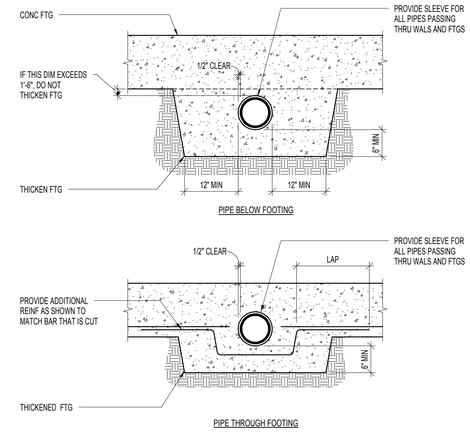

C4 S501 TYPICAL PIPE PERPENDICULAR TO FOOTING
NO SCALE:

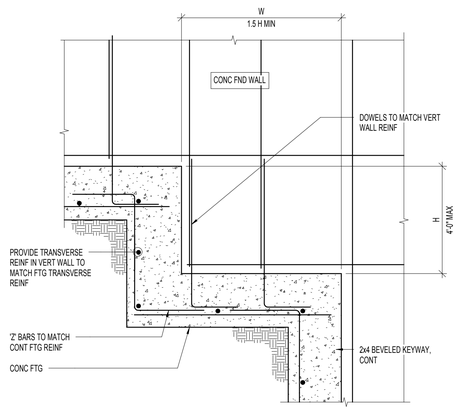

B1 S501 TYPICAL FOOTING STEP AT CONCRETE FOUNDATION WALL
NO SCALE:

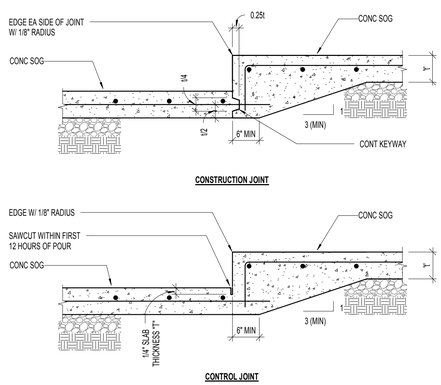

B2 S501 TYPICAL SLAB DEPRESSION
NO SCALE:

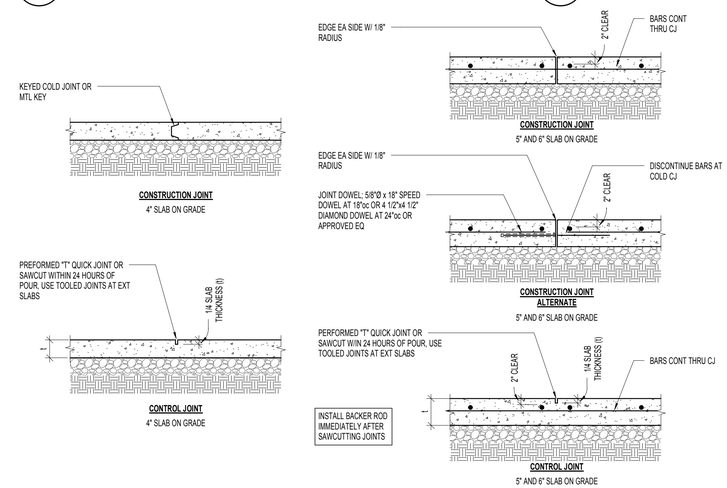

B3 S501 TYPICAL SLAB ON GRADE JOINT
NO SCALE:

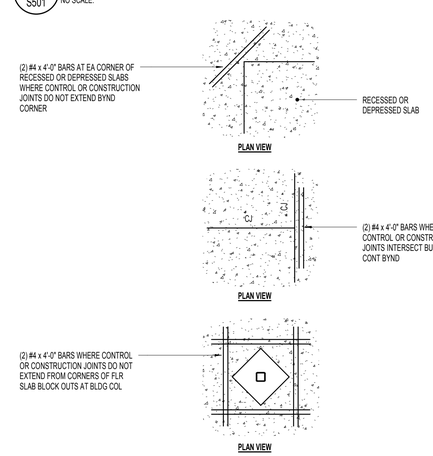

A1 S501 TYPICAL LOCATIONS REQUIRING ADDITIONAL SLAB REINFORCING STEEL
NO SCALE:

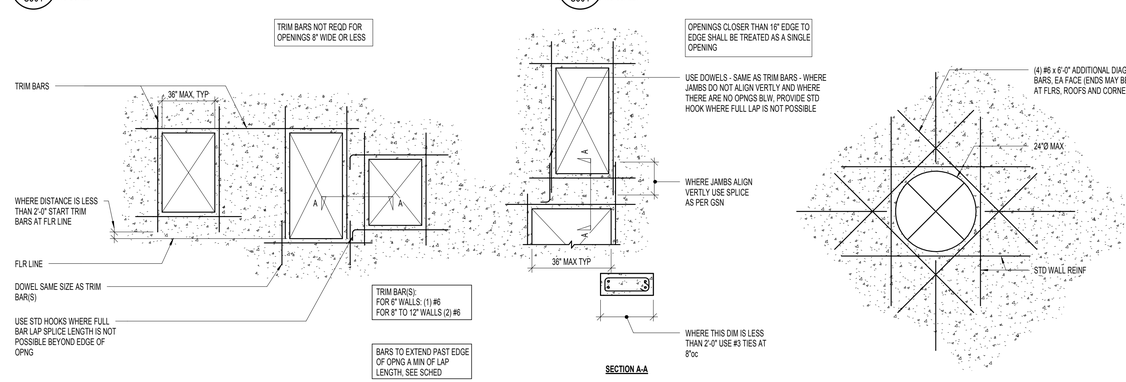

B2 S501 TYPICAL SLAB DEPRESSION
NO SCALE:

A2 S501 TYPICAL TRIM BARS AROUND MISCELLANEOUS CONCRETE WALL OPENINGS UNLESS NOTED OTHERWISE
NO SCALE:

APRIL 21, 2014
BID SET

NOTE:
THESE STRUCTURAL DRAWINGS ARE BASED ON ARCHITECTURAL DRAWINGS DATED APRIL 10, 2014

DIMENSIONS AND ELEVATIONS, AS THEY RELATE TO THE BUILDING IN GENERAL, i.e. GRID TO GRID DIMENSIONS OR DECK BEARING ELEVATIONS, ARE SUPPLIED BY THE ARCHITECT. THEY ARE PROVIDED ON THE STRUCTURAL PLANS AND DETAILS FOR THE CONVENIENCE OF THE CONTRACTOR. VERIFY DIMENSIONS AND ELEVATIONS WITH ARCHITECTURAL DRAWINGS.

DUNN ASSOCIATES, INC
Consulting Structural Engineers
WWW.DUNN-SE.COM
PH: 801-575-8877 FAX: 801-575-8875

CRSA
649 E. South Temple
Salt Lake City, UT 84102
801.355.5915

MWL
11798 N. Lakeridge Pkwy.
Ashland, VA 23005
804-228-7473

State of Utah
Department of Administrative Services
DFCM
Division of Facilities
Construction & Management
4110 State Office Building
Salt Lake City, Utah 84114
Phone: (801) 538 - 3018
Fax: (801) 538 - 3267

DIVISION OF FACILITIES CONSTRUCTION AND MANAGEMENT
REVIEWED FOR
CODE COMPLIANCE
SIGNATURE:
DATE: 08-05-2014

PROFESSIONAL STRUCTURAL ENGINEER
No. 295747
TAIT A. KETCHAM
04/28/2014
STATE OF UTAH

ARCHITECT-ENGINEER STAMP

Unified State Laboratory Module 2
4451 South 2700 West, Taylorsville, UT 84118

DFCM #:	13020300
Project #:	13062
DATE:	ISSUE TYPE:
APRIL 21, 2014	BID SET
CHECKED BY	TAK
DRAWN BY	SJS

FOOTING AND FOUNDATION DETAILS

S501
VOLUME 1

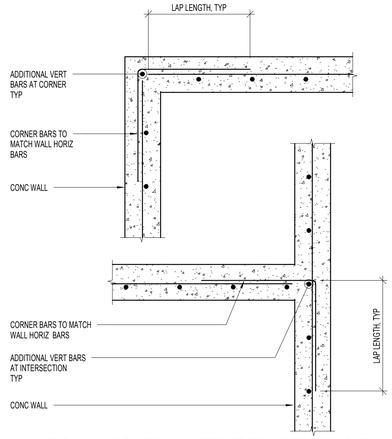

C1 / S502 TYPICAL CORNER WALL REINFORCING FOR SINGLE REINFORCED CONCRETE WALLS (PLAN VIEW)

NO SCALE:

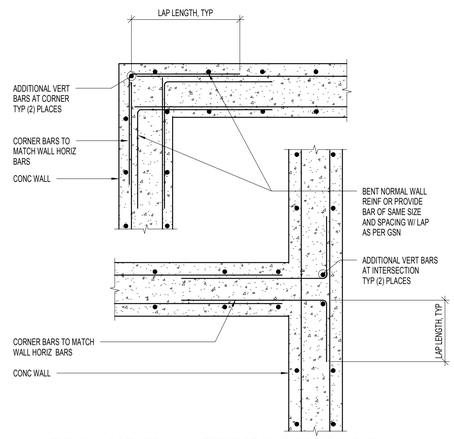

C2 / S502 TYPICAL CORNER WALL REINFORCING FOR DOUBLE REINFORCED CONCRETE WALLS (PLAN VIEW)

NO SCALE:

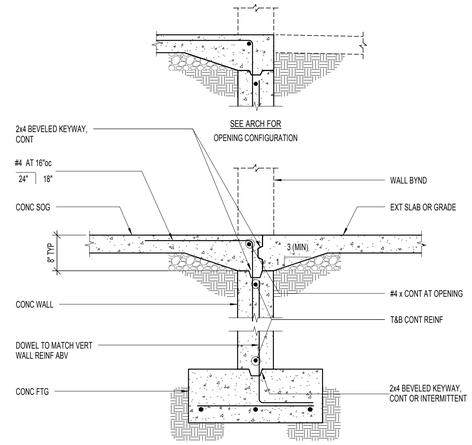

C3 / S502 FOUNDATION WALL AT OPENING DETAIL

NO SCALE:

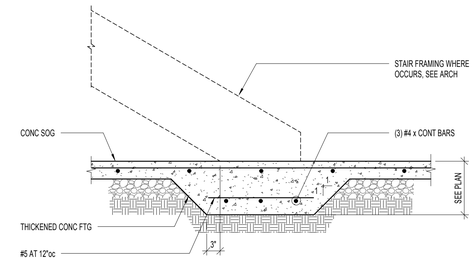

C4 / S502 TYPICAL THICKENED SLAB AT BASE OF STAIRS

NO SCALE:

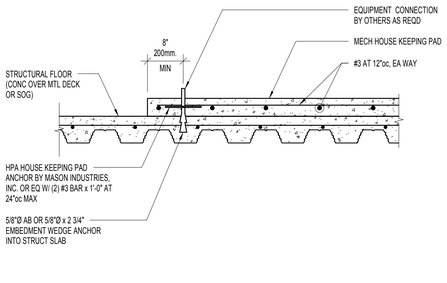

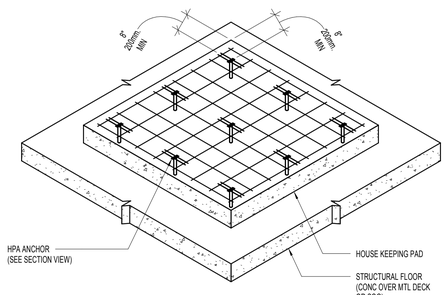

NOTE: DET MAY BE USED IN LIEU OF POST-INSTALLED HOUSEKEEPING PAD DET

B1 / S502 POST INSTALLED ANCHOR DETAIL FOR HOUSEKEEPING PAD ON CONCRETE OVER METAL DECK OR SLAB-ON-GRADE

NO SCALE:

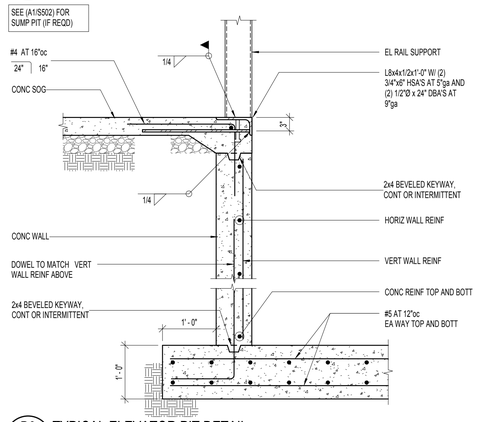

B3 / S502 TYPICAL ELEVATOR PIT DETAIL

NO SCALE:

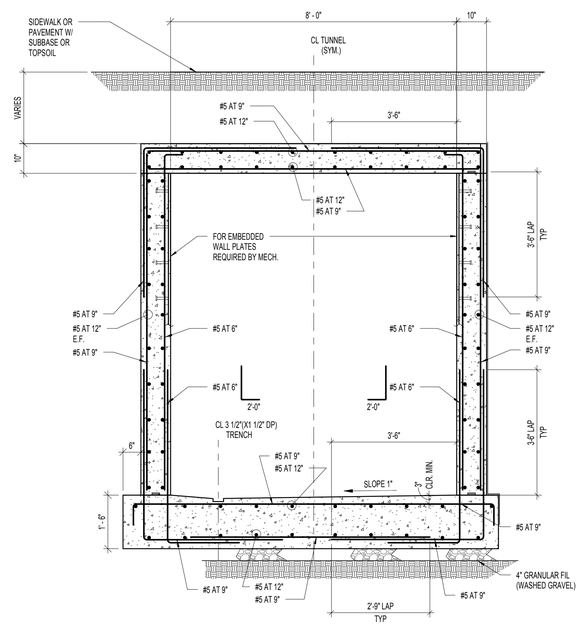

A4 / S502 TYPICAL TUNNEL SECTION

NO SCALE:

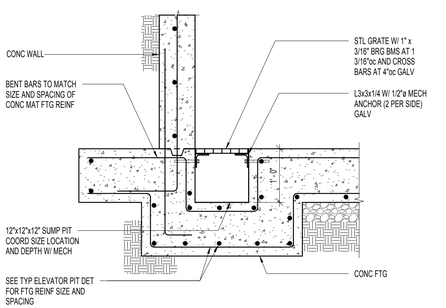

A1 / S502 SUMP IN ELEVATOR PIT

NO SCALE:

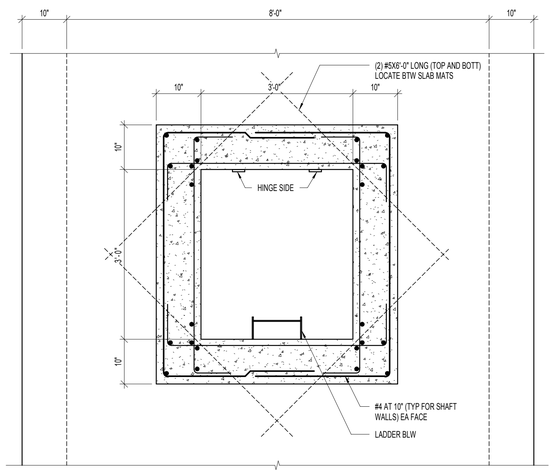

A2 / S502 MAIN TUNNEL ACCESS - TOP SLAB PLAN

NO SCALE:

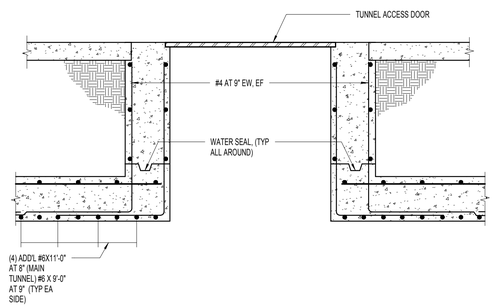

A3 / S502 SECTION VIEW OF TUNNEL ACCESS

NO SCALE:

APRIL 21, 2014
BID SET

NOTE:
THESE STRUCTURAL DRAWINGS ARE BASED ON ARCHITECTURAL DRAWINGS DATED APRIL 10, 2014

DIMENSIONS AND ELEVATIONS, AS THEY RELATE TO THE BUILDING IN GENERAL, i.e. GRID TO GRID DIMENSIONS OR DECK BEARING ELEVATIONS, ARE SUPPLIED BY THE ARCHITECT. THEY ARE PROVIDED ON THE STRUCTURAL PLANS AND DETAILS FOR THE CONVENIENCE OF THE CONTRACTOR. VERIFY DIMENSIONS AND ELEVATIONS WITH ARCHITECTURAL DRAWINGS.

DUNN ASSOCIATES, INC
Consulting Structural Engineers
WWW.DUNN-SE.COM
PH: 801-575-8877 FAX: 801-575-8875

CRSA
649 E. South Temple
Salt Lake City, UT 84102
801.355.5915

MWL
11798 N. Lakeridge Pkwy.
Ashland, VA 23005
804-228-7473

State of Utah
Department of Administrative Services
Division of Facilities Construction & Management
4110 State Office Building
Salt Lake City, Utah 84114
Phone: (801) 538 - 3018
Fax: (801) 538 - 3267

DIVISION OF FACILITIES CONSTRUCTION AND MANAGEMENT
REVIEWED FOR CODE COMPLIANCE
SIGNATURE: Ernie Cate
DATE: 08-05-2014

PROFESSIONAL STRUCTURAL ENGINEER
No. 295747
TAIT A. KETCHAM
04/21/2014
STATE OF UTAH

ARCHITECT-ENGINEER STAMP

Unified State Laboratory Module 2

4451 South 2700 West, Taylorsville, UT 84118

DFCM #:	13020300
Project #:	13062
DATE:	ISSUE TYPE:
APRIL 21, 2014	BID SET
CHECKED BY	TAK
DRAWN BY	SJS

FOOTING AND FOUNDATION DETAILS

S502

VOLUME 1

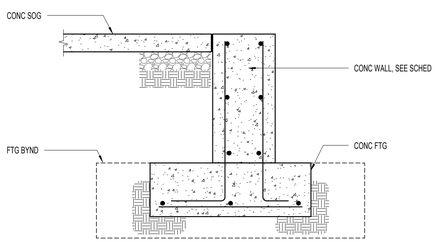

C1 S503 EXTERIOR FOUNDATION WALL
NO SCALE:

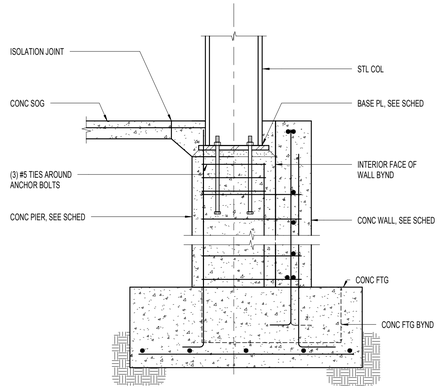

C2 S503 EXTERIOR COLUMN, PIER, AND FOOTING
NO SCALE:

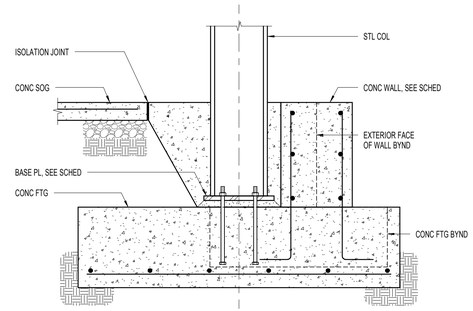

C3 S503 EXTERIOR COLUMN AND FOOTING
NO SCALE:

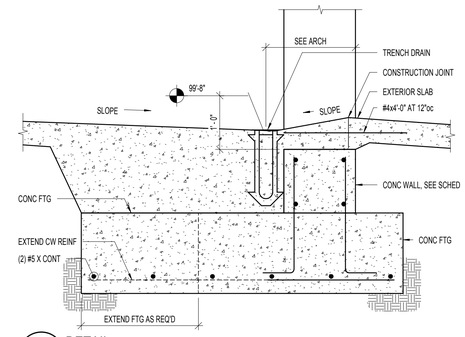

C4 S503 DETAIL
NO SCALE:

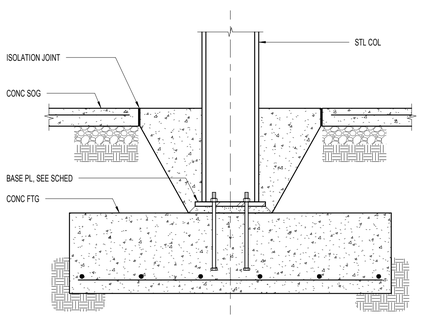

B1 S503 INTERIOR COLUMN AND FOOTING
NO SCALE:

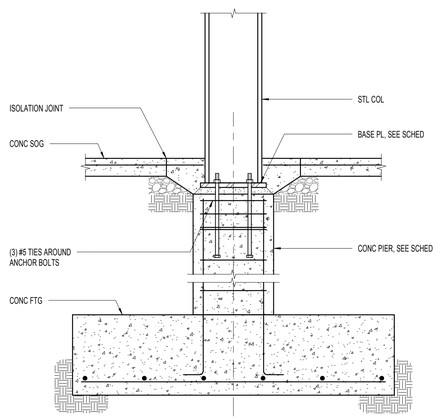

B2 S503 INTERIOR COLUMN, PIER, AND FOOTING
NO SCALE:

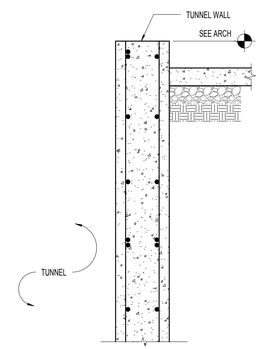

B3 S503 DETAIL
NO SCALE:

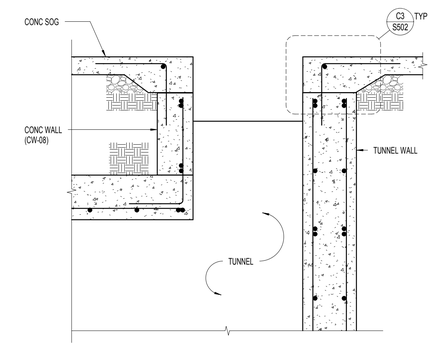

B4 S503 DETAIL
NO SCALE:

APRIL 21, 2014
BID SET

NOTE:
THESE STRUCTURAL DRAWINGS ARE BASED ON ARCHITECTURAL DRAWINGS DATED APRIL 10, 2014

DIMENSIONS AND ELEVATIONS, AS THEY RELATE TO THE BUILDING IN GENERAL, i.e. GRID TO GRID DIMENSIONS OR DECK BEARING ELEVATIONS, ARE SUPPLIED BY THE ARCHITECT. THEY ARE PROVIDED ON THE STRUCTURAL PLANS AND DETAILS FOR THE CONVENIENCE OF THE CONTRACTOR. VERIFY DIMENSIONS AND ELEVATIONS WITH ARCHITECTURAL DRAWINGS.

DUNN ASSOCIATES, INC
Consulting Structural Engineers
WWW.DUNN-SE.COM
PH: 801-575-8877 FAX: 801-575-8875

CRSA
649 E. South Temple
Salt Lake City, UT 84102
801.355.5915

MWL
11798 N. Lakeridge Pkwy.
Ashland, VA 23005
804-228-7473

State of Utah
Department of Administrative Services
Division of Facilities Construction & Management
4110 State Office Building
Salt Lake City, Utah 84114
Phone: (801) 538 - 3018
Fax: (801) 538 - 3267

DIVISION OF FACILITIES CONSTRUCTION AND MANAGEMENT
REVIEWED FOR CODE COMPLIANCE
SIGNATURE:
DATE: 08-05-2014

PROFESSIONAL STRUCTURAL ENGINEER
No. 295747
TAIT A. KETCHAM
04/21/2014
STATE OF UTAH

ARCHITECT-ENGINEER STAMP

Unified State Laboratory Module 2

4451 South 2700 West, Taylorsville, UT 84118

DFCM #:	13020300
Project #:	13062

DATE:	ISSUE TYPE:
APRIL 21, 2014	BID SET
CHECKED BY	TAK
DRAWN BY	SJS

FOOTING AND FOUNDATION DETAILS

S503

VOLUME 1

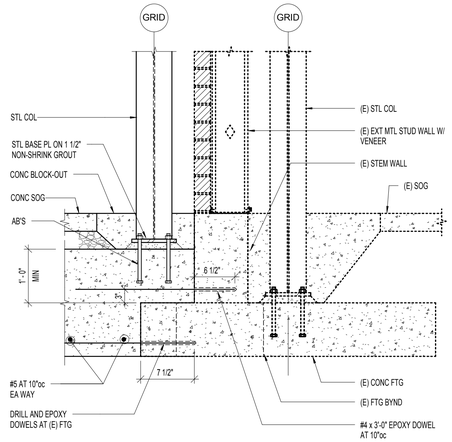

C1 S504 COLUMN AT EXISTING FOOTING
NO SCALE:

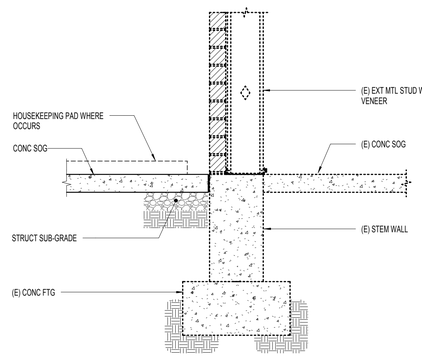

C2 S504 SLAB AT EXISTING STEM WALL
NO SCALE:

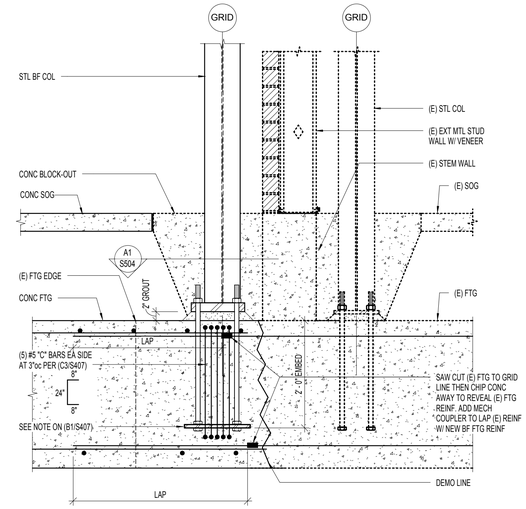

C3 S504 BRACED FRAME COLUMN AT EXISTING FOOTING
NO SCALE:

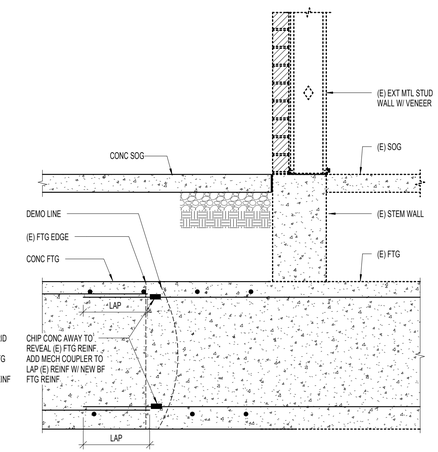

C4 S504 BRACED FRAME FOOTING AT EXISTING FOOTING
NO SCALE:

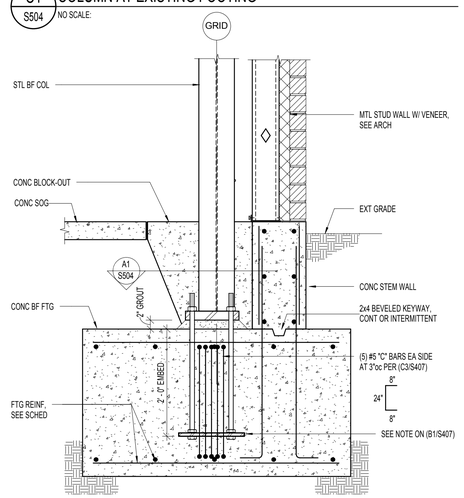

B1 S504 BRACED FRAME COLUMN AT FOOTING
NO SCALE:

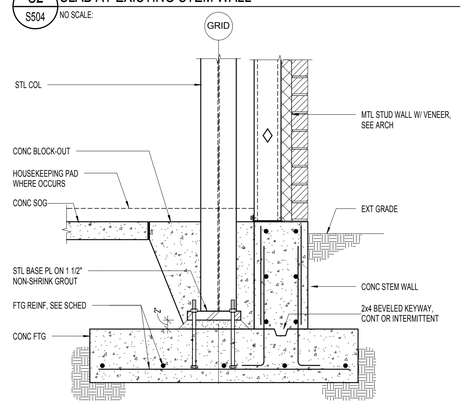

B2 S504 EXTERIOR COLUM AT MECHANICAL ROOF ADDITION
NO SCALE:

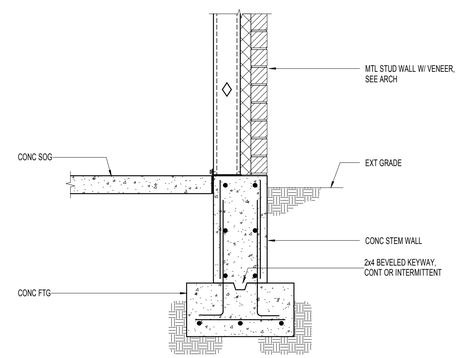

B3 S504 EXTERIOR STEM WALL AT MECHANICAL ROOF ADDITION
NO SCALE:

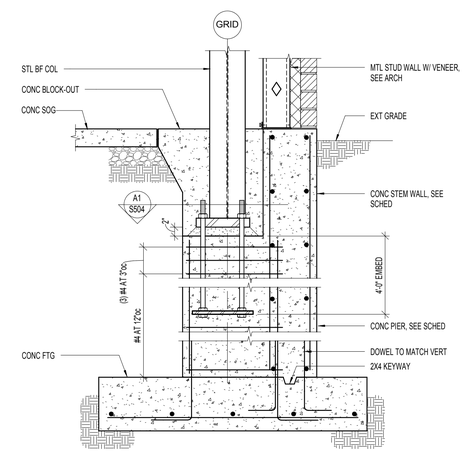

B4 S504 BRACED FRAME COLUMN AT CONCRETE PIER
NO SCALE:

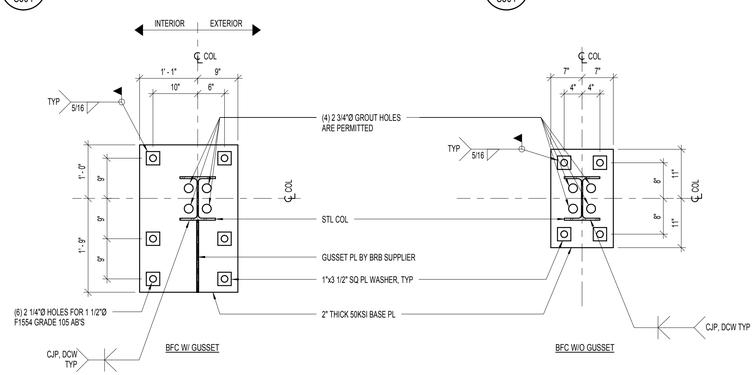

A1 S504 TYPICAL MECHANICAL ROOF EXPANSION BASE PLATE
NO SCALE:

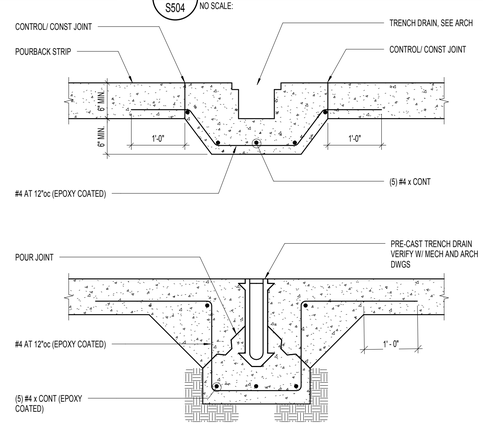

A3 S504 TYPICAL TRENCH DRAIN
NO SCALE:

APRIL 21, 2014
BID SET

NOTE:
THESE STRUCTURAL DRAWINGS ARE BASED ON ARCHITECTURAL DRAWINGS DATED APRIL 10, 2014

DIMENSIONS AND ELEVATIONS, AS THEY RELATE TO THE BUILDING IN GENERAL, i.e. GRID TO GRID DIMENSIONS OR DECK BEARING ELEVATIONS, ARE SUPPLIED BY THE ARCHITECT. THEY ARE PROVIDED ON THE STRUCTURAL PLANS AND DETAILS FOR THE CONVENIENCE OF THE CONTRACTOR. VERIFY DIMENSIONS AND ELEVATIONS WITH ARCHITECTURAL DRAWINGS.

DUNN ASSOCIATES, INC
Consulting Structural Engineers
WWW.DUNN-SE.COM
PH: 801-575-8877 FAX: 801-575-8875

CRSA
649 E. South Temple
Salt Lake City, UT 84102
801.355.5915

MWL
11798 N. Lakeridge Pkwy.
Ashland, VA 23005
804-228-7473

State of Utah
Department of Administrative Services
Division of Facilities Construction & Management
4110 State Office Building
Salt Lake City, Utah 84114
Phone: (801) 538 - 3018
Fax: (801) 538 - 3267

DIVISION OF FACILITIES CONSTRUCTION AND MANAGEMENT
REVIEWED FOR CODE COMPLIANCE
SIGNATURE: Ernie Gelfe
DATE: 08-05-2014

PROFESSIONAL STRUCTURAL ENGINEER
No. 295747
TAIT A. KETCHAM
04/21/2014
STATE OF UTAH

ARCHITECT-ENGINEER STAMP

Unified State Laboratory Module 2

4451 South 2700 West, Taylorsville, UT 84118

DFCM #:	13020300
Project #:	13062
DATE:	ISSUE TYPE:
APRIL 21, 2014	BID SET
CHECKED BY	TAK
DRAWN BY	SJS

FOOTING AND FOUNDATION DETAILS

S504

VOLUME 1

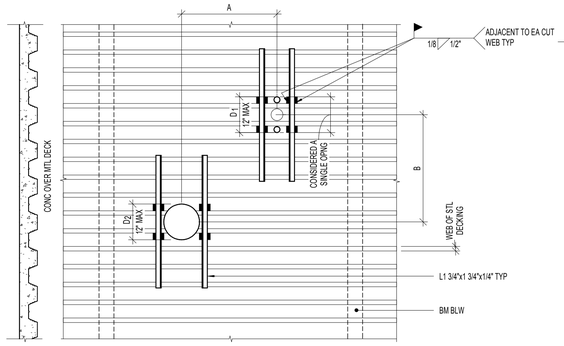

NOTES:
1. THIS DETAIL APPLIES TO HOLES CUTTING NO MORE THAN (2) ADJACENT WEBS FOR 12" MODULE DECK.
2. OPENINGS SHALL BE BLOCKED OUT AND THE DECK LEFT INTACT. AFTER THE CONCRETE HAS CURED, THE DECK IN THE AREA OF THE OPENING CAN BE REMOVED.
3. ANGLES SHALL BE PLACED ON TOP OF THE DECK, ANGLES SHAL EXTEND 3 WEBS PAST THE DECK OPENING (TYP)
   IF DIMENSION A IS >4D_1, 4D_2, OR 32" WHICHEVER IS LARGER, THERE IS NO RESTRICTION ON DIMENSION B
   IF DIMENSION B IS >4D_1, 4D_2, OR 32" WHICHEVER IS LARGER, THERE IS NO RESTRICTION ON DIMENSION A
4. IF DIMENSIONS A AND B ARE <4D_1, 4D_2, OR 32" WHICHEVER IS LARGER, THE OPENING GROUP SHALL BE CONSIDERED AS A SINGLE HOLE, AND SHALL BE REINFORCED AS REQUIRED FOR LARGER OPENING . SEE FOLLOWING DETAIL.
5. INDIVIDUAL HOLES LESS THAN 6" IN DIAMETER AND CUTTING NO MORE THAN ONE WEB DO NOT REQUIRE REINFORCING.

C1 S601 TYPICAL SMALL OPENING IN FLOOR SLAB
NO SCALE:

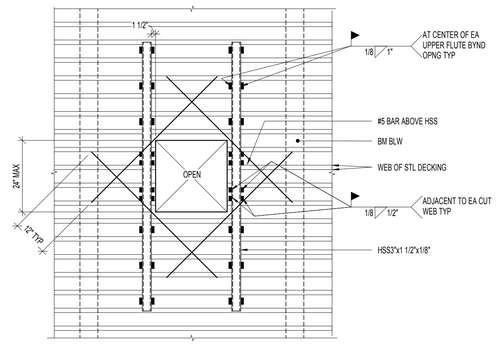

NOTES:
1. THIS DETAIL APPLIES TO OPENING UP TO 24".
2. TUBES SHALL BE PLACED ON TOP OF DECK.
3. THE DECK SHALL NOT BE CUT UNTIL CONCRETE HAS BEEN PLACED AND CURED. AT THE TIME OF POURING, SUITABLE SLEEVES OR BULKHEADS SHALL BE PLACED AROUND THE OPENING.
4. SEE FOLLOWING DETAIL IF OPENING IS GREATER THAN 24".

C2 S601 TYPICAL MEDIUM OPENING IN FLOOR SLAB
NO SCALE:

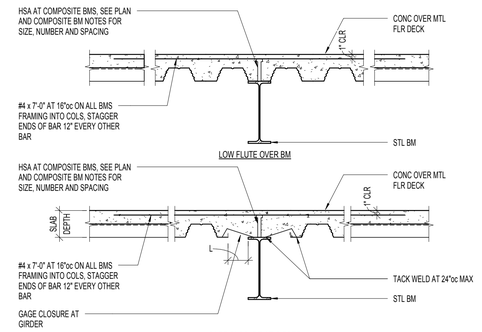

GAGE CLOSURE AT GIRDER

RECOMMENDED GIRDER FILLER THICKNESS

L *	METAL GAGE (TYPE)
0" TO 5"	20
5"+ TO 7 1/2"	16
7 1/2"+ TO 9"	14

* NOT TO EXCEED 12". ABOVE GAGES ARE BASED ON FLAT MATERIAL WITH NO STRENGTH INCREASE DUE TO ITS SHAPE.

C3 S601 TYPICAL COMPOSITE BEAM DETAILS
NO SCALE:

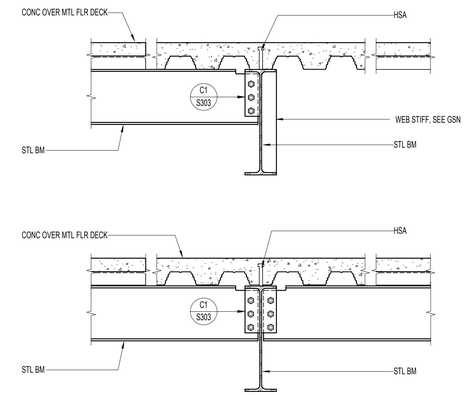

C4 S601 TYPICAL STEEL BEAM TO STEEL BEAM CONNECTION DETAILS
NO SCALE:

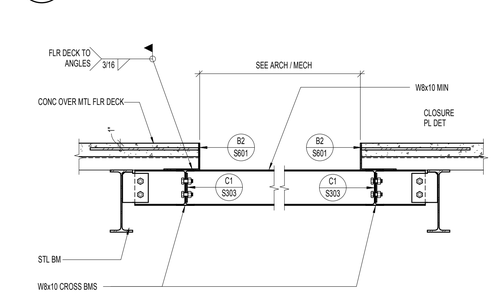

B1 S601 MISCELLANEOUS FLOOR OPENING DETAIL
NO SCALE:

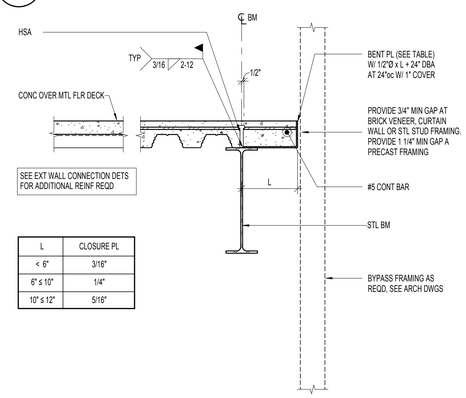

L	CLOSURE PL
< 6"	3/16"
6" ≤ 10"	1/4"
10" ≤ 12"	5/16"

B2 S601 TYPICAL CLOSURE PLATE (OVERHANG L ≤ 12")
NO SCALE:

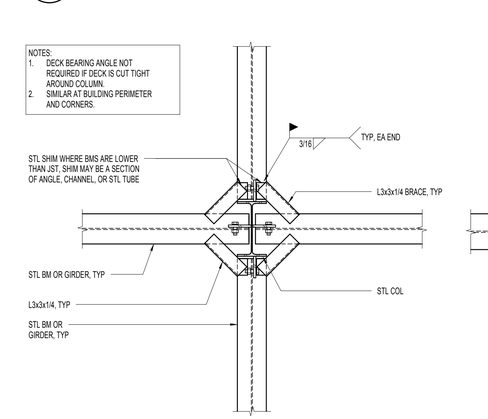

B3 S601 TYPICAL DECK BEARING ANGLES AT COLUMNS (WHERE REQUIRED)
NO SCALE:

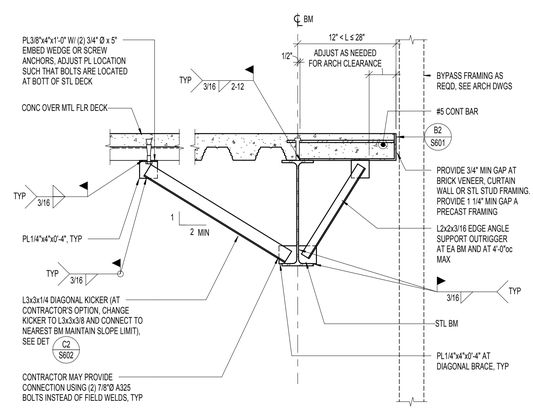

A1 S601 TYPICAL CLOSURE PLATE (OVERHANG 12" < L ≤ 28")
NO SCALE:

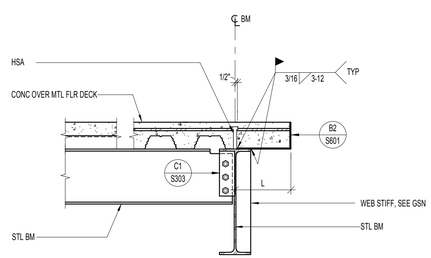

NOTE: FOR SLAB EDGE OVERHANG GREATER THAN 12", SEE DET (A3 / S601)

A2 S601 TYPICAL SLAB EDGE CONDITION AT BEAM (OVERHANG L ≤ 12")
NO SCALE:

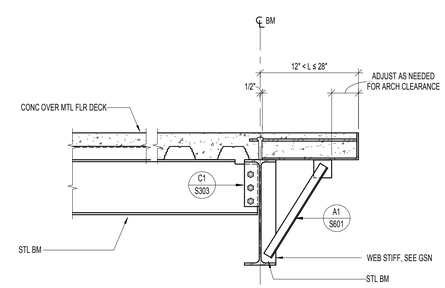

A3 S601 TYPICAL SLAB EDGE CONDITION AT BEAM (OVERHANG 12" < 'L' ≤ 28"
NO SCALE:

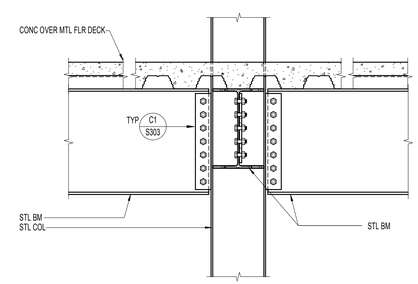

A4 S601 TYPICAL BOLTED CONNECTION TO STEEL COLUMN FLANGE
NO SCALE:

APRIL 21, 2014
BID SET

NOTE:
THESE STRUCTURAL DRAWINGS ARE BASED ON ARCHITECTURAL DRAWINGS DATED APRIL 10, 2014

DIMENSIONS AND ELEVATIONS, AS THEY RELATE TO THE BUILDING IN GENERAL, i.e. GRID TO GRID DIMENSIONS OR DECK BEARING ELEVATIONS, ARE SUPPLIED BY THE ARCHITECT. THEY ARE PROVIDED ON THE STRUCTURAL PLANS AND DETAILS FOR THE CONVENIENCE OF THE CONTRACTOR. VERIFY DIMENSIONS AND ELEVATIONS WITH ARCHITECTURAL DRAWINGS.

DUNN ASSOCIATES, INC
Consulting Structural Engineers
WWW.DUNN-SE.COM
PH: 801-575-8877 FAX: 801-575-8875

CRSA
649 E. South Temple
Salt Lake City, UT 84102
801.355.5915

MWL
11798 N. Lakeridge Pkwy.
Ashland, VA 23005
804-228-7473

State of Utah
Department of Administrative Services
Division of Facilities Construction & Management
4110 State Office Building
Salt Lake City, Utah 84114
Phone: (801) 538 - 3018
Fax: (801) 538 - 3267

DIVISION OF FACILITIES CONSTRUCTION AND MANAGEMENT
REVIEWED FOR CODE COMPLIANCE
SIGNATURE: Ernie Gelfe
DATE: 08-05-2014

PROFESSIONAL STRUCTURAL ENGINEER
No. 295747
TAIT A. KETCHAM
04/21/2014
STATE OF UTAH

ARCHITECT-ENGINEER STAMP

Unified State Laboratory Module 2
4451 South 2700 West,
Taylorsville, UT 84118

DFCM #:	13020300
Project #:	13062
DATE:	ISSUE TYPE:
APRIL 21, 2014	BID SET
CHECKED BY	TAK
DRAWN BY	SJS

FLOOR FRAMING DETAILS

S601
VOLUME 1

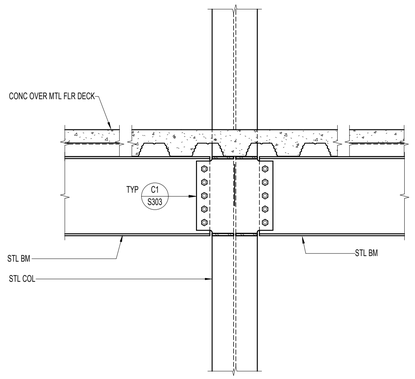

C1 S602 TYPICAL BOLTED CONNECTION TO STEEL COLUMN WEB
NO SCALE:

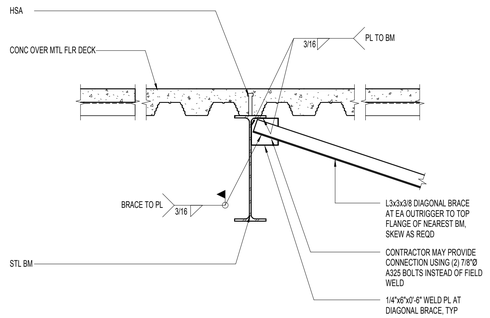

C2 S602 TYPICAL KICKER CONNECTION DETAIL AT STEEL BEAM
NO SCALE:

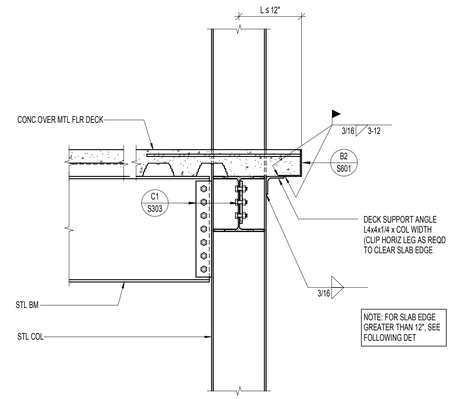

C3 S602 TYPICAL SLAB EDGE AT STEEL COLUMN FLANGE (OVERHANG 'L' ≤ 12")
NO SCALE:

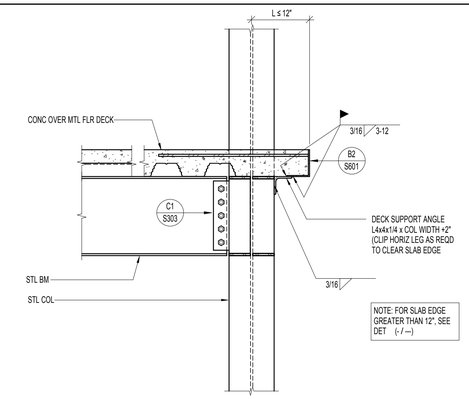

C4 S602 TYPICAL SLAB EDGE AT STEEL COLUMN WEB (OVERHANG 'L' ≤ 12")
NO SCALE:

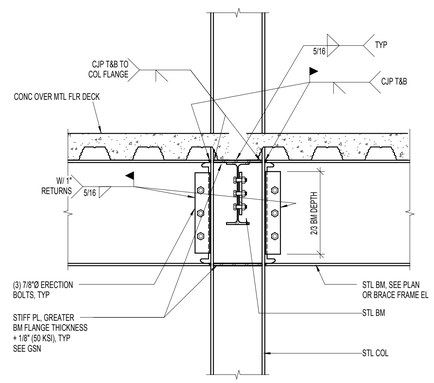

B1 S602 CANTILEVERED BEAM CONNECTION AT COLUMN
NO SCALE:

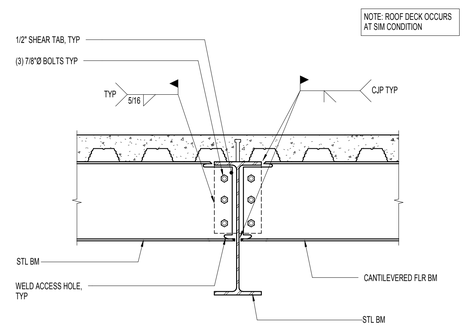

B2 S602 CANTILEVER BEAM CONNECTION AT BEAM
NO SCALE:

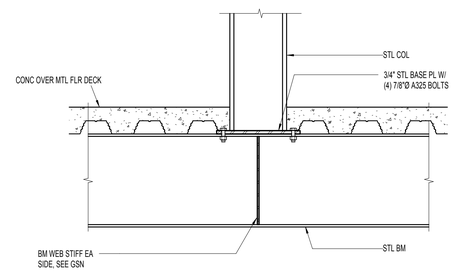

B3 S602 STEEL COLUMN AND TRANSFER BEAM CONNECTION
NO SCALE:

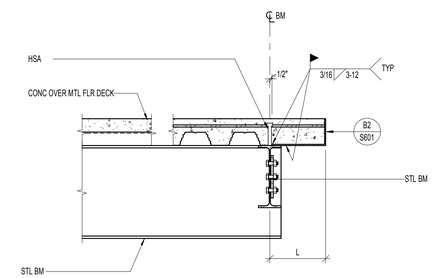

B4 S602 EDGE BEAM SUPPORT AT CANTILEVER BEAM
NO SCALE:

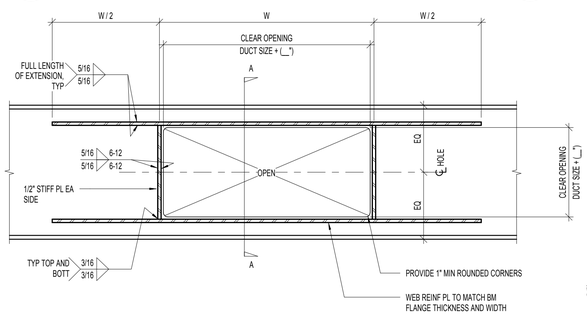

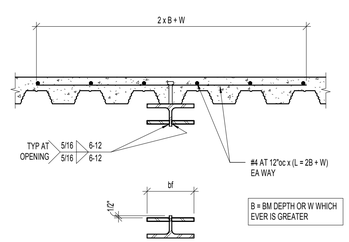

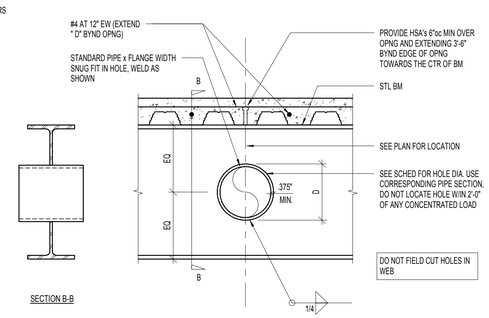

A1 S602 PENETRATION THROUGH STEEL BEAM
NO SCALE:

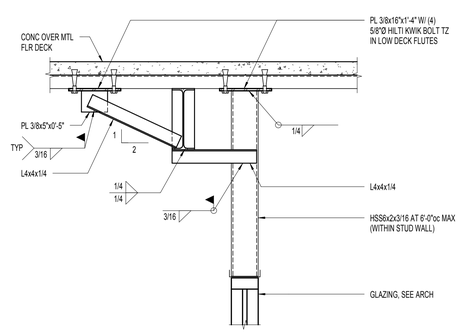

A3 S602 GLAZING SUPPORT DETAIL
NO SCALE:

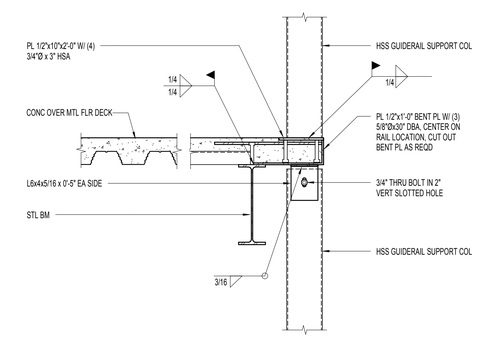

A4 S602 ELEVATOR GUIDE RAIL SUPPORT AT EDGE BEAM
NO SCALE:

APRIL 21, 2014
BID SET

NOTE:
THESE STRUCTURAL DRAWINGS ARE BASED ON ARCHITECTURAL DRAWINGS DATED APRIL 10, 2014

DIMENSIONS AND ELEVATIONS, AS THEY RELATE TO THE BUILDING IN GENERAL, i.e. GRID TO GRID DIMENSIONS OR DECK BEARING ELEVATIONS, ARE SUPPLIED BY THE ARCHITECT. THEY ARE PROVIDED ON THE STRUCTURAL PLANS AND DETAILS FOR THE CONVENIENCE OF THE CONTRACTOR. VERIFY DIMENSIONS AND ELEVATIONS WITH ARCHITECTURAL DRAWINGS.

DUNN ASSOCIATES, INC
Consulting Structural Engineers
WWW.DUNN-SE.COM
PH: 801-575-8877 FAX: 801-575-8875

CRSA
649 E. South Temple
Salt Lake City, UT 84102
801.355.5915

MWL
11798 N. Lakeridge Pkwy.
Ashland, VA 23005
804-228-7473

State of Utah
Department of Administrative Services
Division of Facilities Construction & Management
4110 State Office Building
Salt Lake City, Utah 84114
Phone: (801) 538 - 3018
Fax: (801) 538 - 3267

DIVISION OF FACILITIES CONSTRUCTION AND MANAGEMENT
REVIEWED FOR CODE COMPLIANCE
SIGNATURE: Ernie Gelb
DATE: 08-05-2014

PROFESSIONAL STRUCTURAL ENGINEER
No. 295747
TAIT A. KETCHAM
04/21/2014
STATE OF UTAH

ARCHITECT-ENGINEER STAMP

Unified State Laboratory Module 2

4451 South 2700 West, Taylorsville, UT 84118

DFCM #:	13020300
Project #:	13062
DATE:	ISSUE TYPE:
APRIL 21, 2014	BID SET
CHECKED BY	TAK
DRAWN BY	SJS

FLOOR FRAMING DETAILS

S602

VOLUME 1

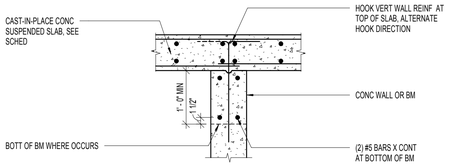

C1 S603 CONCRETE SUSPENDED SLAB INTERMEDIATE BEARING
NO SCALE:

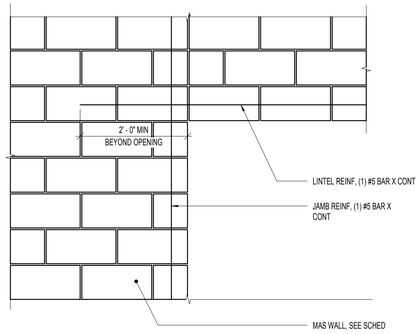

C2 S603 TYPICAL MASONRY WALL OPENING
NO SCALE:

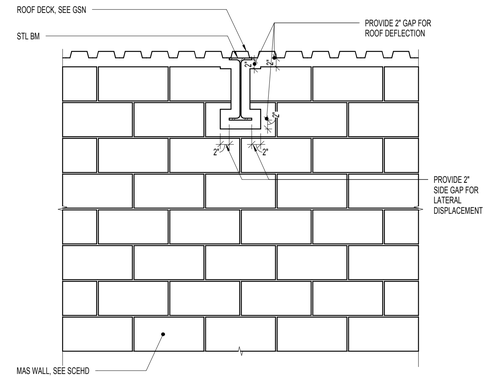

C3 S603 STEEL BEAM CLEARANCE AT MASONRY WALL
NO SCALE:

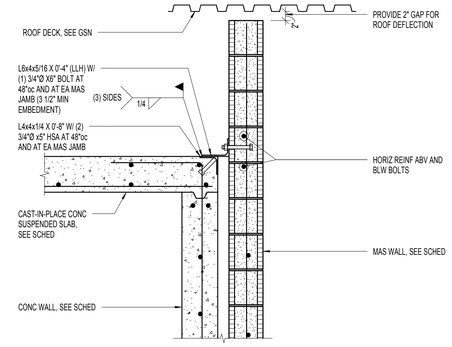

C4 S603 TYPICAL MASONRY WALL ATTACHMENT
NO SCALE:

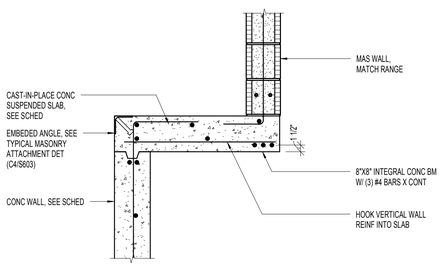

B1 S603 CONCRETE SUSPENDED SLAB AT RANGE VENT
NO SCALE:

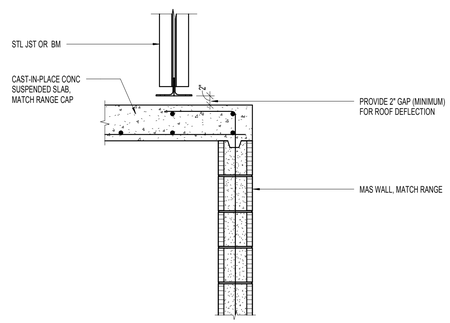

B2 S603 TYPICAL RANGE VENT CAP AT MASONRY WALL
NO SCALE:

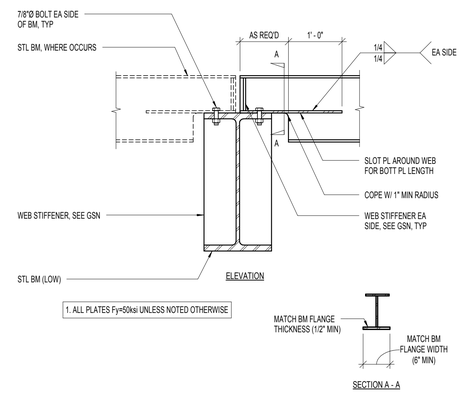

B3 S603 TYPICAL HAUNCHED BEAM
NO SCALE:

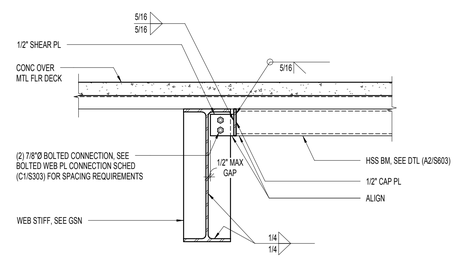

B4 S603 TYPICAL HSS BEAM TO WF BEAM CONNECTION
NO SCALE:

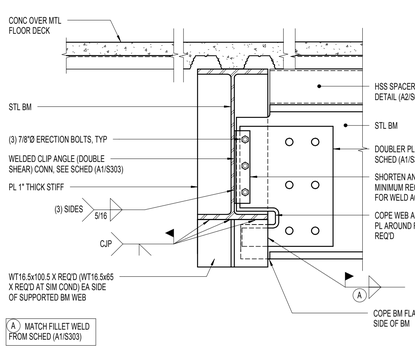

A1 S603 BEAM TO LOW BEAM CONNECTION DETAIL AT FLOOR FRAMING
NO SCALE:

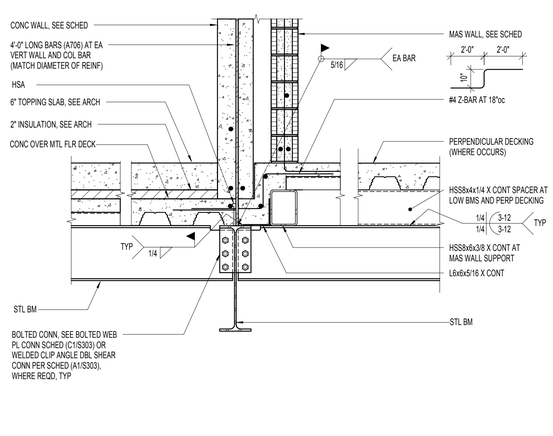

A2 S603 TYPICAL STEEL BEAM AT DEPRESSED FLOOR
NO SCALE:

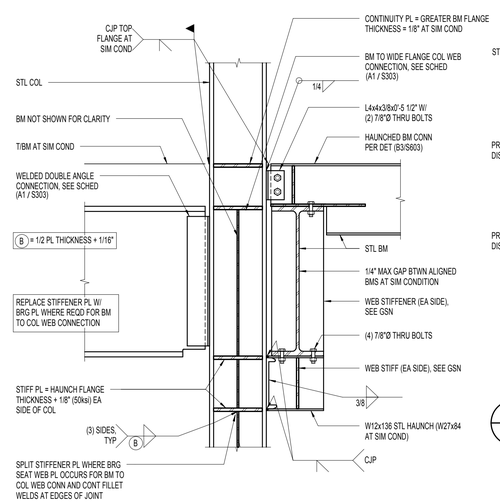

A3 S603 OFFSET STEEL BEAM TO STEEL COLUMN CONNECTION
NO SCALE:

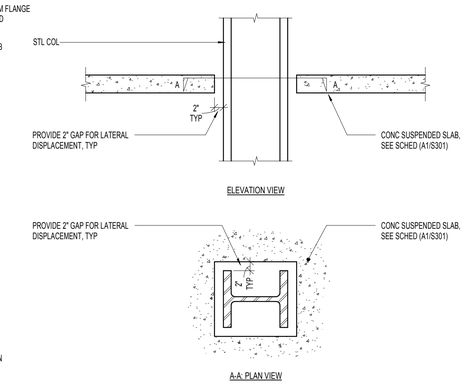

A4 S603 STEEL COLUMN CLEARANCE AT CONCRETE SLAB
NO SCALE:

APRIL 21, 2014
BID SET

NOTE:
THESE STRUCTURAL DRAWINGS ARE BASED ON ARCHITECTURAL DRAWINGS DATED APRIL 10, 2014

DIMENSIONS AND ELEVATIONS, AS THEY RELATE TO THE BUILDING IN GENERAL, i.e. GRID TO GRID DIMENSIONS OR DECK BEARING ELEVATIONS, ARE SUPPLIED BY THE ARCHITECT. THEY ARE PROVIDED ON THE STRUCTURAL PLANS AND DETAILS FOR THE CONVENIENCE OF THE CONTRACTOR. VERIFY DIMENSIONS AND ELEVATIONS WITH ARCHITECTURAL DRAWINGS.

DUNN ASSOCIATES, INC
Consulting Structural Engineers
WWW.DUNN-SE.COM
PH: 801-575-8877 FAX: 801-575-8875

CRSA
649 E. South Temple
Salt Lake City, UT 84102
801.355.5915

MWL
11798 N. Lakeridge Pkwy.
Ashland, VA 23005
804-228-7473

State of Utah
Department of Administrative Services
DFCM
Division of Facilities Construction & Management
4110 State Office Building
Salt Lake City, Utah 84114
Phone: (801) 538 - 3018
Fax: (801) 538 - 3267

DIVISION OF FACILITIES CONSTRUCTION AND MANAGEMENT
REVIEWED FOR CODE COMPLIANCE
SIGNATURE: Ernie Gelfe
DATE: 08-05-2014

PROFESSIONAL STRUCTURAL ENGINEER
No. 295747
TAIT A. KETCHAM
04/21/2014
STATE OF UTAH

ARCHITECT-ENGINEER STAMP

Unified State Laboratory Module 2

4451 South 2700 West, Taylorsville, UT 84118

DFCM #:	13020300
Project #:	13062
DATE:	ISSUE TYPE:
APRIL 21, 2014	BID SET
CHECKED BY	TAK
DRAWN BY	SJS

FLOOR FRAMING DETAILS

S603

VOLUME 1

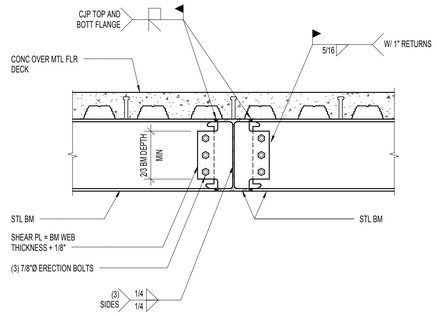

C1 / S604 CANTILEVERED BEAM AT BEAM OF EQUAL DEPTH

NO SCALE:

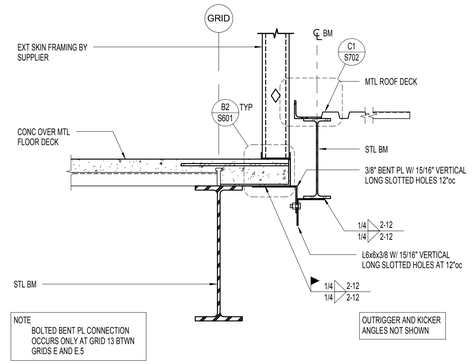

C2 / S604 CANOPY ATTACHMENT TO BUILDING

NO SCALE:

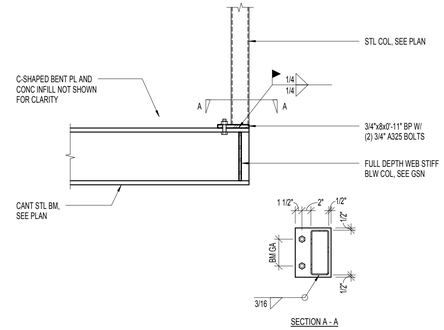

C3 / S604 DETAIL

NO SCALE:

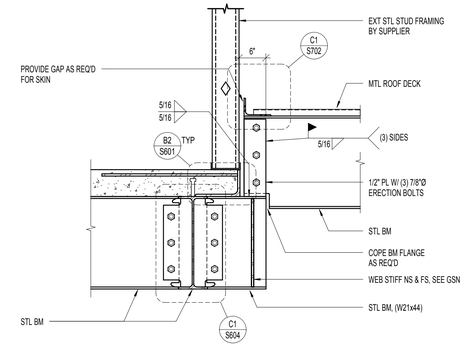

C4 / S604 ROOF BEAM TO FLOOR BEAM CONNECTION

NO SCALE:

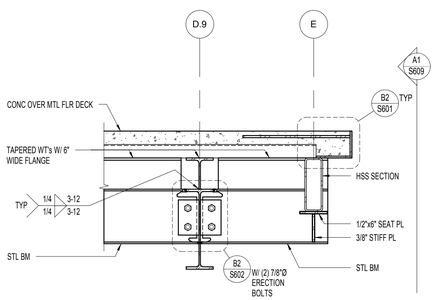

B1 / S604 LOW CANTILEVERED BEAM

NO SCALE:

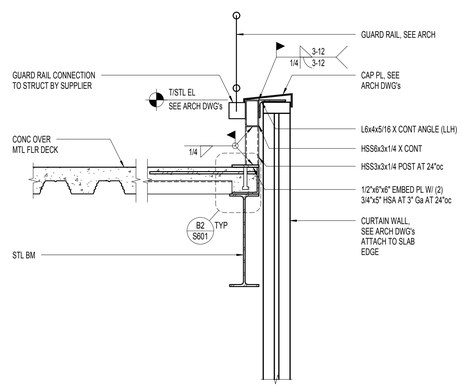

B2 / S604 DETAIL

NO SCALE:

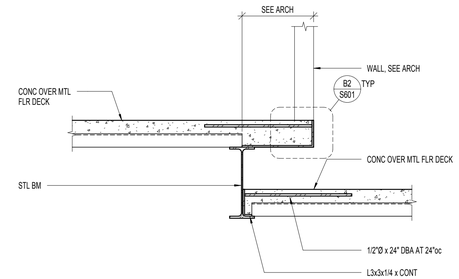

B3 / S604 DETAIL

NO SCALE:

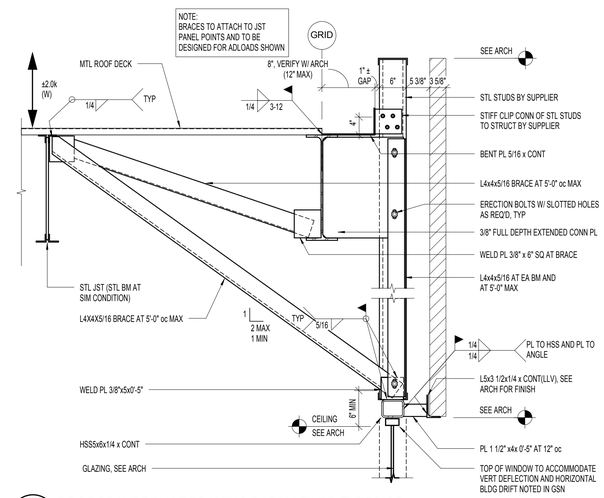

B4 / S604 ROOF SPANDREL AT FRAMING PARALLEL TO EXTERIOR

NO SCALE:

APRIL 21, 2014
BID SET

NOTE:
THESE STRUCTURAL DRAWINGS ARE BASED ON ARCHITECTURAL DRAWINGS DATED APRIL 10, 2014

DIMENSIONS AND ELEVATIONS, AS THEY RELATE TO THE BUILDING IN GENERAL, i.e. GRID TO GRID DIMENSIONS OR DECK BEARING ELEVATIONS, ARE SUPPLIED BY THE ARCHITECT. THEY ARE PROVIDED ON THE STRUCTURAL PLANS AND DETAILS FOR THE CONVENIENCE OF THE CONTRACTOR. VERIFY DIMENSIONS AND ELEVATIONS WITH ARCHITECTURAL DRAWINGS.

DUNN
DUNN ASSOCIATES, INC
Consulting Structural Engineers
WWW.DUNN-SE.COM
PH: 801-575-8877 FAX: 801-575-8875

CRSA
649 E. South Temple
Salt Lake City, UT 84102
801.355.5915

MWL
11798 N. Lakeridge Pkwy.
Ashland, VA 23005
804-228-7473

State of Utah
Department of Administrative Services
DFCM
Division of Facilities Construction & Management
4110 State Office Building
Salt Lake City, Utah 84114
Phone: (801) 538 - 3018
Fax: (801) 538 - 3267

DIVISION OF FACILITIES CONSTRUCTION AND MANAGEMENT
REVIEWED FOR CODE COMPLIANCE
SIGNATURE: Ernie Gelle
DATE: 08-05-2014

PROFESSIONAL STRUCTURAL ENGINEER
No. 295747
TAIT A. KETCHAM
04/21/2014
STATE OF UTAH

ARCHITECT-ENGINEER STAMP

Unified State Laboratory Module 2

4451 South 2700 West, Taylorsville, UT 84118

DFCM #:	13020300
Project #:	13062
DATE:	ISSUE TYPE:
APRIL 21, 2014	BID SET
CHECKED BY	TAK
DRAWN BY	SJS

FLOOR FRAMING DETAILS

S604

VOLUME 1

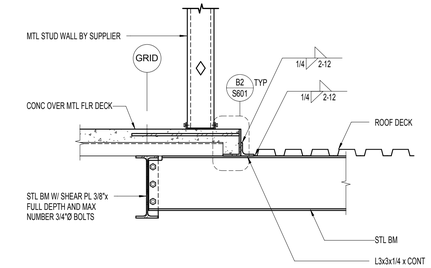

C1 S605 FLOOR FRAMING DETAIL
NO SCALE:

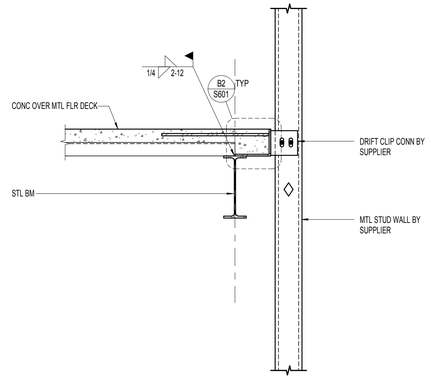

C2 S605 FLOOR FRAMING DETAIL
NO SCALE:

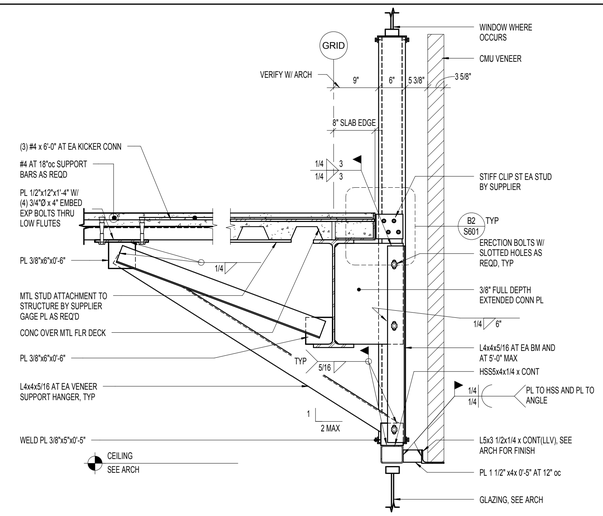

C3 S605 FLOOR FRAMING DETAIL
NO SCALE:

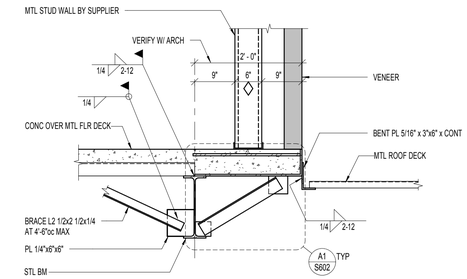

C4 S605 FLOOR FRAMING DETAIL
NO SCALE:

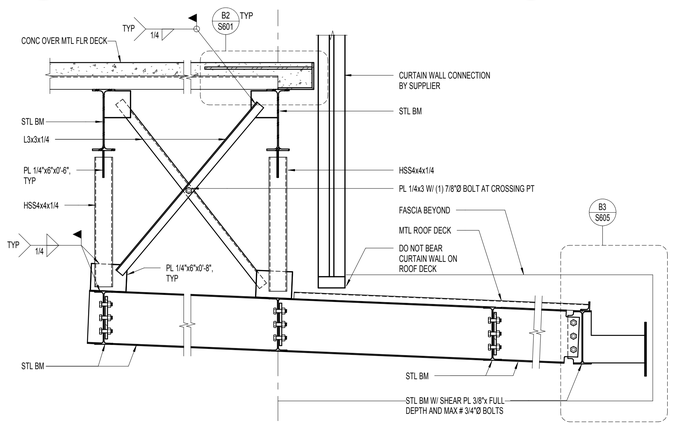

B1 S605 DETAIL
NO SCALE:

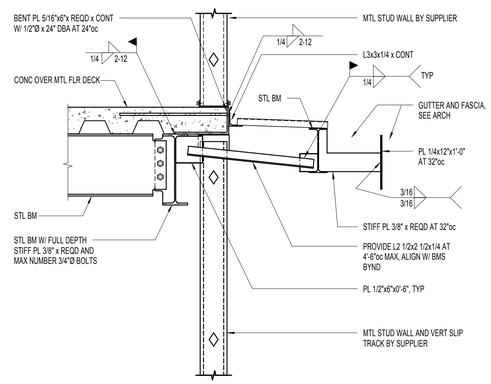

B3 S605 FLOOR FRAMING DETAIL
NO SCALE:

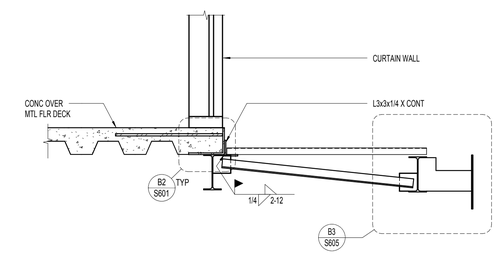

B4 S605 DETAIL
NO SCALE:

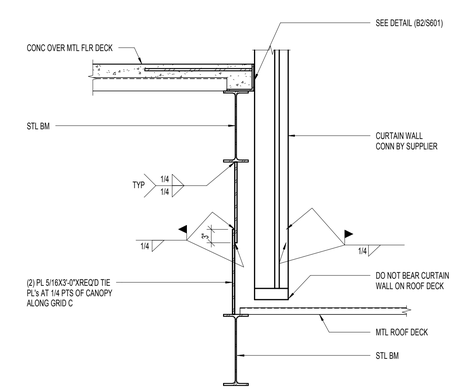

A1 S605 ROOF TOP DETAIL
NO SCALE:

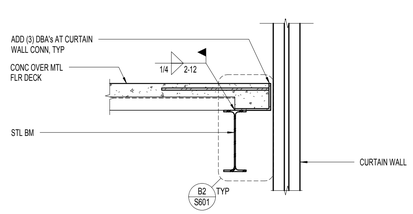

A2 S605 DETAIL
NO SCALE:

APRIL 21, 2014
BID SET

NOTE:
THESE STRUCTURAL DRAWINGS ARE BASED ON ARCHITECTURAL DRAWINGS DATED APRIL 10, 2014

DIMENSIONS AND ELEVATIONS, AS THEY RELATE TO THE BUILDING IN GENERAL, i.e. GRID TO GRID DIMENSIONS OR DECK BEARING ELEVATIONS, ARE SUPPLIED BY THE ARCHITECT. THEY ARE PROVIDED ON THE STRUCTURAL PLANS AND DETAILS FOR THE CONVENIENCE OF THE CONTRACTOR. VERIFY DIMENSIONS AND ELEVATIONS WITH ARCHITECTURAL DRAWINGS.

DUNN ASSOCIATES, INC
Consulting Structural Engineers
WWW.DUNN-SE.COM
PH: 801-575-8877 FAX: 801-575-8875

CRSA
649 E. South Temple
Salt Lake City, UT 84102
801.355.5915

MWL
11798 N. Lakeridge Pkwy.
Ashland, VA 23005
804-228-7473

State of Utah
Department of Administrative Services
DFCM
Division of Facilities Construction & Management
4110 State Office Building
Salt Lake City, Utah 84114
Phone: (801) 538 - 3018
Fax: (801) 538 - 3267

DIVISION OF FACILITIES CONSTRUCTION AND MANAGEMENT
REVIEWED FOR CODE COMPLIANCE
SIGNATURE: Ernie Cate
DATE: 08-05-2014

PROFESSIONAL STRUCTURAL ENGINEER
No. 295747
TAIT A. KETCHAM
04/21/2014
STATE OF UTAH

ARCHITECT-ENGINEER STAMP

Unified State Laboratory Module 2

4451 South 2700 West, Taylorsville, UT 84118

DFCM #: 13020300
Project #: 13062

DATE:	ISSUE TYPE:
APRIL 21, 2014	BID SET
CHECKED BY	TAK
DRAWN BY	SJS

FLOOR FRAMING DETAILS

S605

VOLUME 1

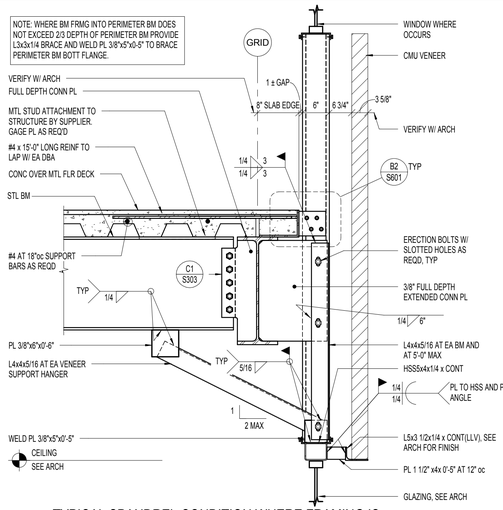

C1 S606 TYPICAL SPANDREL CONDITION WHERE FRAMING IS PERPENDICULAR TO EXTERIOR
NO SCALE:

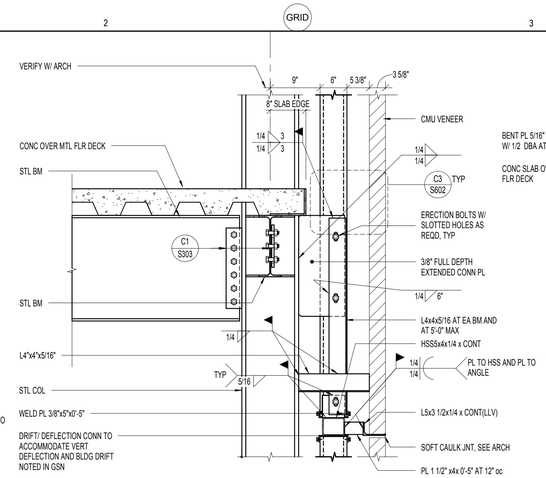

C2 S606 TYPICAL SPANDREL CONDITION AT STEEL COLUMN / CMU PIER
NO SCALE:

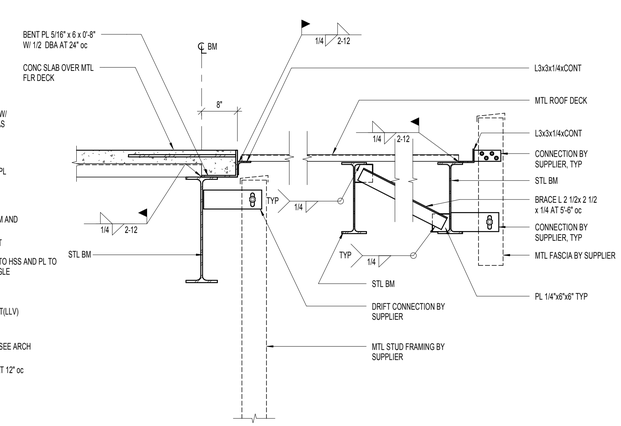

C3 S606 FLOOR DETAIL
NO SCALE:

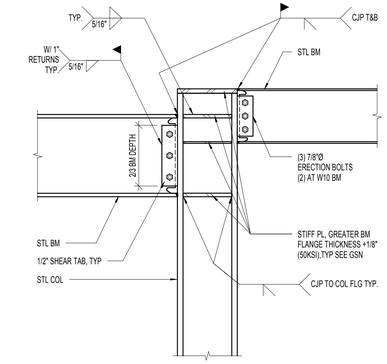

C4 S606 FLOOR DETAIL
NO SCALE:

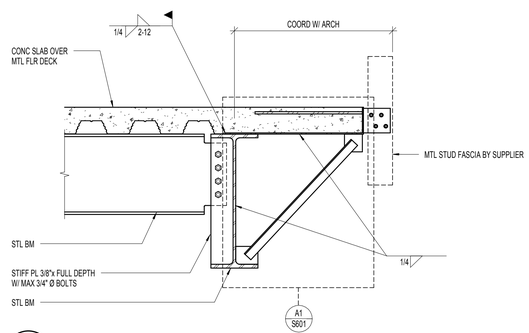

B1 S606 FLOOR DETAIL
NO SCALE:

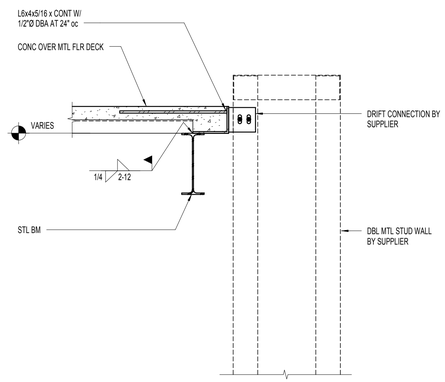

B2 S606 FLOOR DETAIL
NO SCALE:

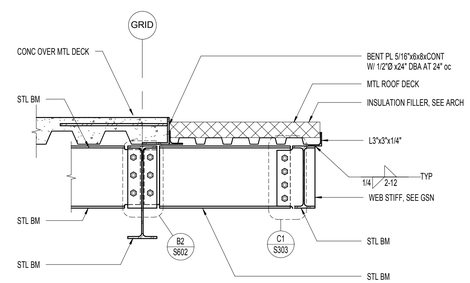

B3 S606 FLOOR DETAIL
NO SCALE:

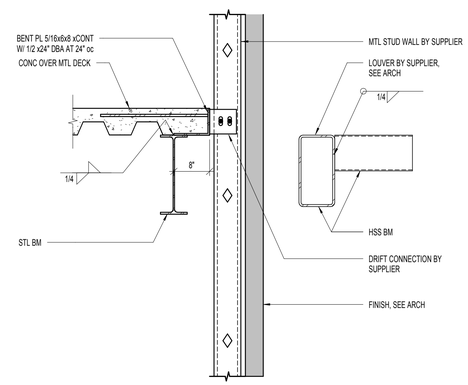

B4 S606 FLOOR DETAIL
NO SCALE:

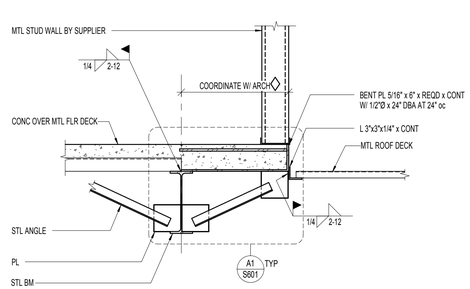

A1 S606 FLOOR DETAIL
NO SCALE:

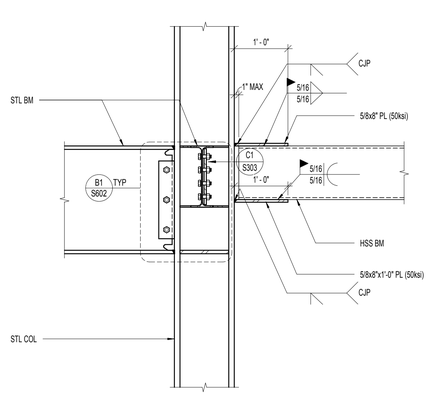

A2 S606 EYEBROW CANTILEVER DETAIL
NO SCALE:

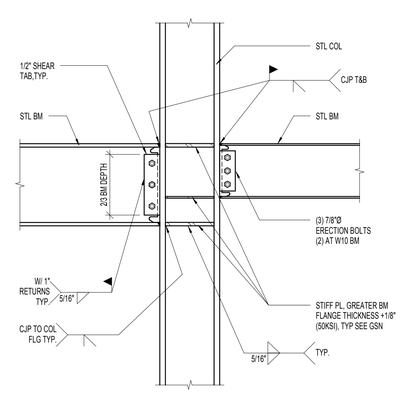

A3 S606 FLOOR DETAIL
NO SCALE:

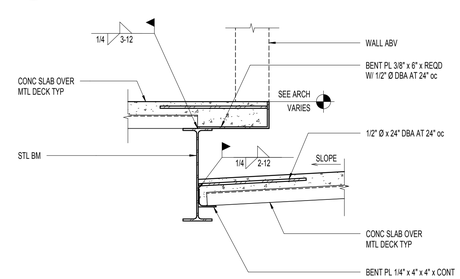

A4 S606 FLOOR DETAIL
NO SCALE:

APRIL 21, 2014
BID SET

NOTE:
THESE STRUCTURAL DRAWINGS ARE BASED ON ARCHITECTURAL DRAWINGS DATED APRIL 10, 2014

DIMENSIONS AND ELEVATIONS, AS THEY RELATE TO THE BUILDING IN GENERAL, i.e. GRID TO GRID DIMENSIONS OR DECK BEARING ELEVATIONS, ARE SUPPLIED BY THE ARCHITECT. THEY ARE PROVIDED ON THE STRUCTURAL PLANS AND DETAILS FOR THE CONVENIENCE OF THE CONTRACTOR. VERIFY DIMENSIONS AND ELEVATIONS WITH ARCHITECTURAL DRAWINGS.

DUNN
DUNN ASSOCIATES, INC
Consulting Structural Engineers
WWW.DUNN-SE.COM
PH: 801-575-8877 FAX: 801-575-8875

CRSA
649 E. South Temple
Salt Lake City, UT 84102
801.355.5915

MWL
11798 N. Lakeridge Pkwy.
Ashland, VA 23005
804-228-7473

State of Utah
Department of Administrative Services
DFCM
Division of Facilities Construction & Management
4110 State Office Building
Salt Lake City, Utah 84114
Phone: (801) 538 - 3018
Fax: (801) 538 - 3267

DIVISION OF FACILITIES CONSTRUCTION AND MANAGEMENT
REVIEWED FOR CODE COMPLIANCE
SIGNATURE: Ernie Calle
DATE: 08-05-2014

PROFESSIONAL STRUCTURAL ENGINEER
No. 295747
TAIT A. KETCHAM
04/21/2014
STATE OF UTAH

ARCHITECT-ENGINEER STAMP

Unified State Laboratory Module 2

4451 South 2700 West, Taylorsville, UT 84118

DFCM #:	13020300
Project #:	13062
DATE:	ISSUE TYPE:
APRIL 21, 2014	BID SET
CHECKED BY	TAK
DRAWN BY	SJS

FLOOR FRAMING DETAILS

S606

VOLUME 1

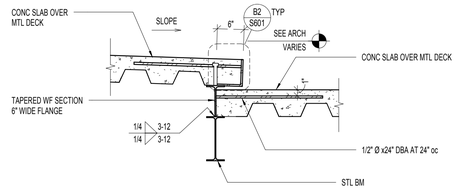

C1 S607 CONCRETE ROOF STEP
NO SCALE:

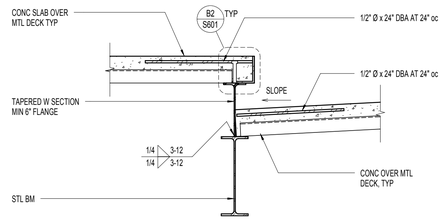

C2 S607 CONCRETE ROOF STEP
NO SCALE:

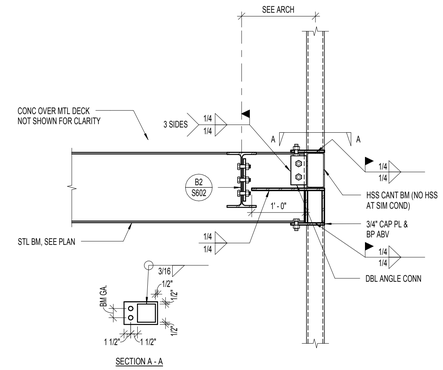

C3 S607 DETAIL
NO SCALE:

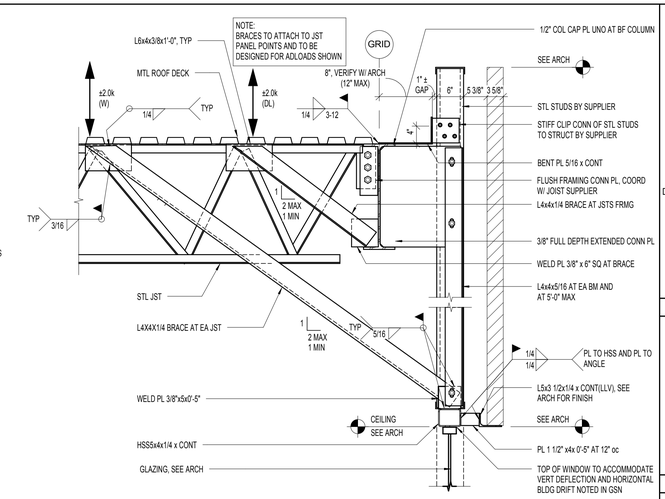

C4 S607 DETAIL
NO SCALE:

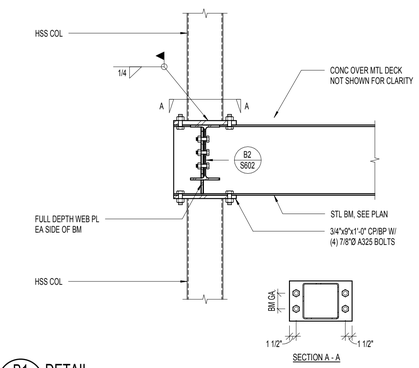

B1 S607 DETAIL
NO SCALE:

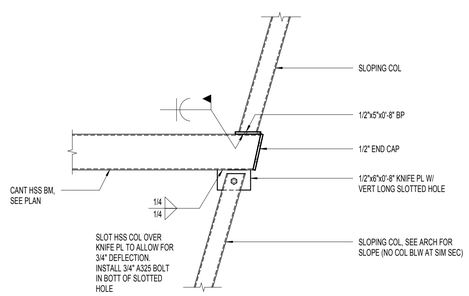

B2 S607 DETAIL
NO SCALE:

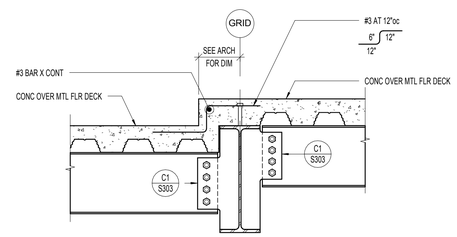

B3 S607 BEAM CONNECTION AT FLOOR RECESS
NO SCALE:

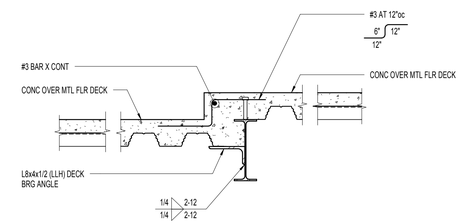

B4 S607 FLOOR RECESS
NO SCALE:

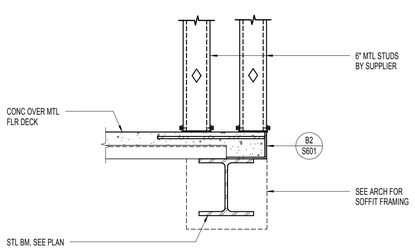

A1 S607 DETAIL
NO SCALE:

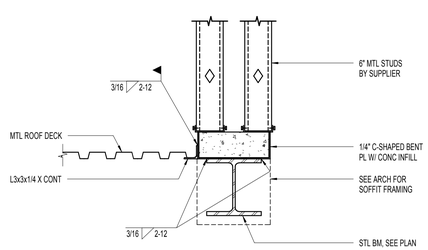

A2 S607 DETAIL
NO SCALE:

APRIL 21, 2014
BID SET

NOTE:
THESE STRUCTURAL DRAWINGS ARE BASED ON ARCHITECTURAL DRAWINGS DATED APRIL 10, 2014

DIMENSIONS AND ELEVATIONS, AS THEY RELATE TO THE BUILDING IN GENERAL, i.e. GRID TO GRID DIMENSIONS OR DECK BEARING ELEVATIONS, ARE SUPPLIED BY THE ARCHITECT. THEY ARE PROVIDED ON THE STRUCTURAL PLANS AND DETAILS FOR THE CONVENIENCE OF THE CONTRACTOR. VERIFY DIMENSIONS AND ELEVATIONS WITH ARCHITECTURAL DRAWINGS.

DUNN ASSOCIATES, INC
Consulting Structural Engineers
WWW.DUNN-SE.COM
PH: 801-575-8877 FAX: 801-575-8875

CRSA
649 E. South Temple
Salt Lake City, UT 84102
801.355.5915

MWL
11798 N. Lakeridge Pkwy.
Ashland, VA 23005
804-228-7473

State of Utah
Department of Administrative Services
Division of Facilities Construction & Management
4110 State Office Building
Salt Lake City, Utah 84114
Phone: (801) 538 - 3018
Fax: (801) 538 - 3267

DIVISION OF FACILITIES CONSTRUCTION AND MANAGEMENT
REVIEWED FOR CODE COMPLIANCE
SIGNATURE: Ernie Cate
DATE: 08-05-2014

PROFESSIONAL STRUCTURAL ENGINEER
No. 295747
TAIT A. KETCHAM
04/21/2014
STATE OF UTAH

ARCHITECT-ENGINEER STAMP

Unified State Laboratory Module 2

4451 South 2700 West, Taylorsville, UT 84118

DFCM #:	13020300
Project #:	13062
DATE:	ISSUE TYPE:
APRIL 21, 2014	BID SET
CHECKED BY	TAK
DRAWN BY	SJS

FLOOR FRAMING DETAILS

S607

VOLUME 1

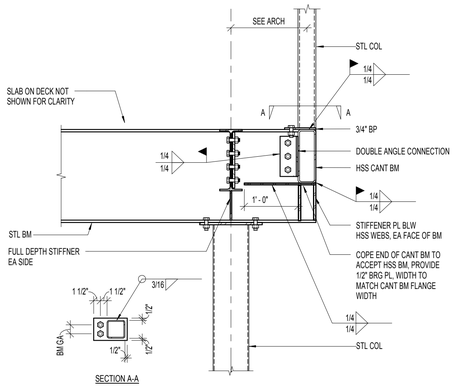

C1 S608 DETAIL
NO SCALE:

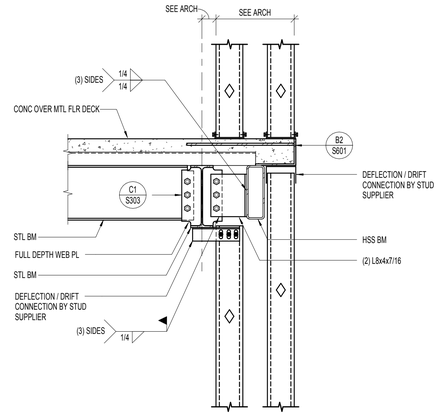

C2 S608 DETAIL
NO SCALE:

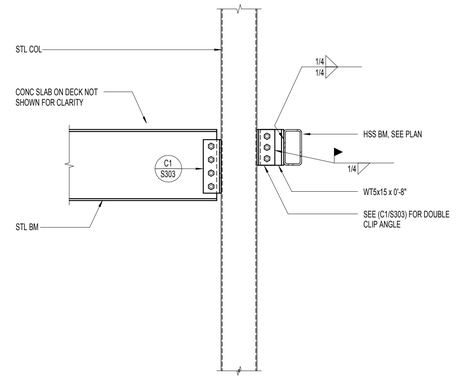

C3 S608 DETAIL
NO SCALE:

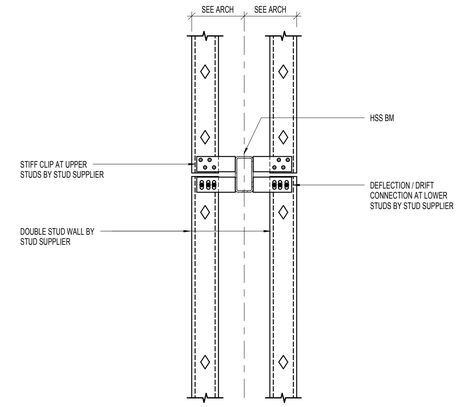

C4 S608 DETAIL
NO SCALE:

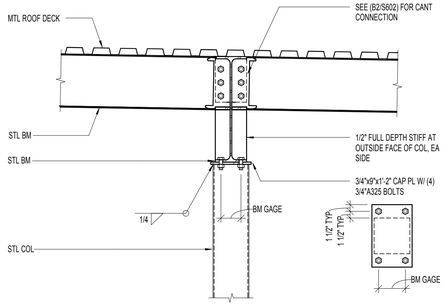

B1 S608 DETAIL
NO SCALE:

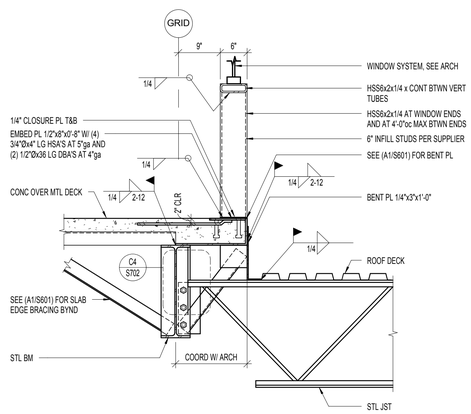

B2 S608 DETAIL
NO SCALE:

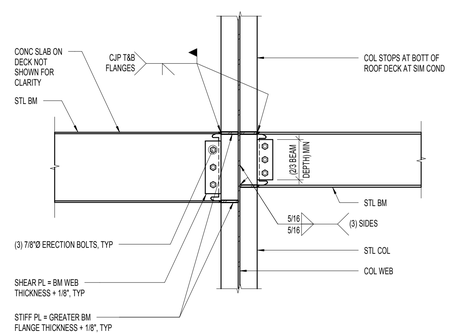

B3 S608 CANTILEVERED BEAM CONNECTION AT STEEL COLUMN WEB
NO SCALE:

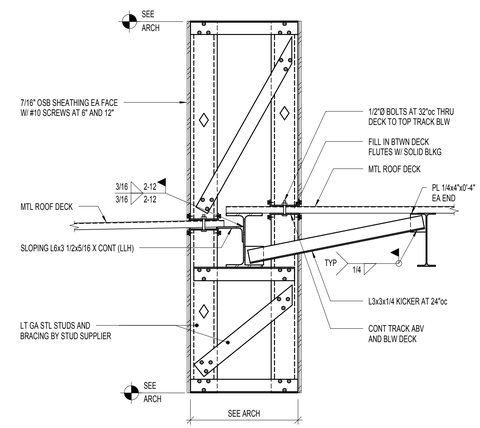

B4 S608 PARAPET/ SOFFIT AT NORTH CANOPY
NO SCALE:

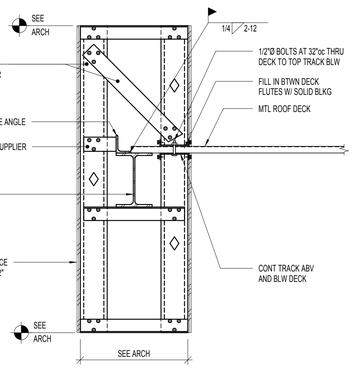

A1 S608 PARAPET/ SOFFIT AT NORTH CANOPY
NO SCALE:

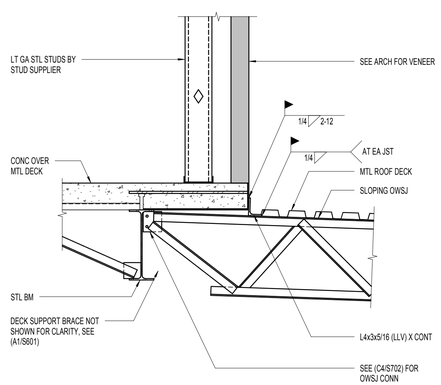

A2 S608 2ND FLOOR AT NORTH CANOPY
NO SCALE:

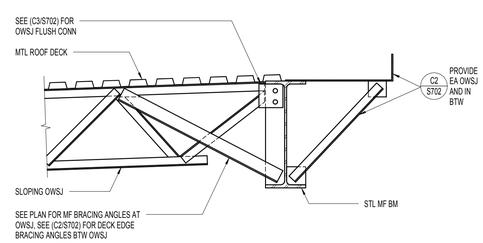

A3 S608 NORTH CANOPY EDGE OF ROOF
NO SCALE:

APRIL 21, 2014
BID SET

NOTE:
THESE STRUCTURAL DRAWINGS ARE BASED ON ARCHITECTURAL DRAWINGS DATED APRIL 10, 2014

DIMENSIONS AND ELEVATIONS, AS THEY RELATE TO THE BUILDING IN GENERAL, i.e. GRID TO GRID DIMENSIONS OR DECK BEARING ELEVATIONS, ARE SUPPLIED BY THE ARCHITECT. THEY ARE PROVIDED ON THE STRUCTURAL PLANS AND DETAILS FOR THE CONVENIENCE OF THE CONTRACTOR. VERIFY DIMENSIONS AND ELEVATIONS WITH ARCHITECTURAL DRAWINGS.

DUNN ASSOCIATES, INC
Consulting Structural Engineers
WWW.DUNN-SE.COM
PH: 801-575-8877 FAX: 801-575-8875

CRSA
649 E. South Temple
Salt Lake City, UT 84102
801.355.5915

MWL
11798 N. Lakeridge Pkwy.
Ashland, VA 23005
804-228-7473

State of Utah
Department of Administrative Services
Division of Facilities Construction & Management
4110 State Office Building
Salt Lake City, Utah 84114
Phone: (801) 538 - 3018
Fax: (801) 538 - 3267

DIVISION OF FACILITIES CONSTRUCTION AND MANAGEMENT
REVIEWED FOR CODE COMPLIANCE
SIGNATURE:
DATE: 08-05-2014

PROFESSIONAL STRUCTURAL ENGINEER
No. 295747
TAIT A. KETCHAM
04/21/2014
STATE OF UTAH

ARCHITECT-ENGINEER STAMP

Unified State Laboratory Module 2

4451 South 2700 West, Taylorsville, UT 84118

DFCM #: 13020300
Project #: 13062

DATE:	ISSUE TYPE:
APRIL 21, 2014	BID SET
CHECKED BY	TAK
DRAWN BY	SJS

FLOOR FRAMING DETAILS

S608
VOLUME 1

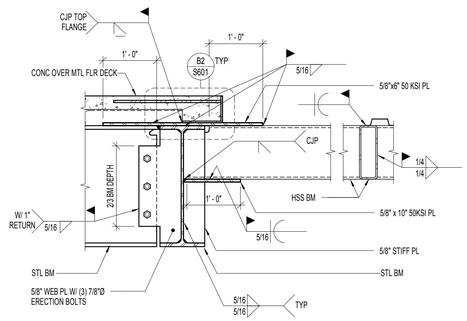

C1 / S609 EYEBROW CANTILEVERED AT BEAM
NO SCALE:

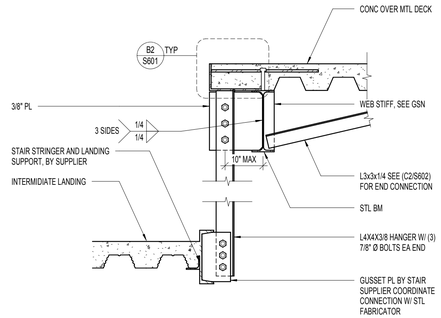

C2 / S609 HANGER AT INTERMEDIATE LANDING
NO SCALE:

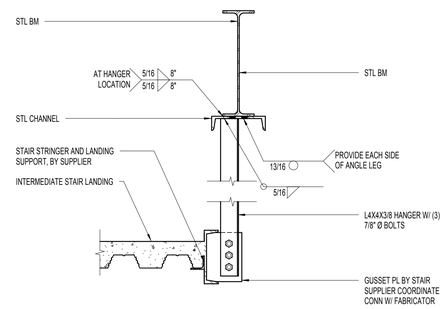

C3 / S609 HANGER AT INTERMEDIATE LANDING
NO SCALE:

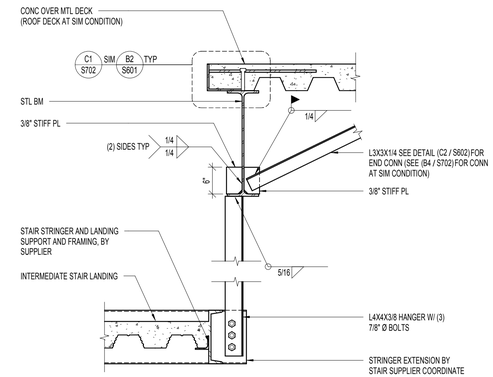

C4 / S609 HANGER AT INTERMEDIATE LANDING
NO SCALE:

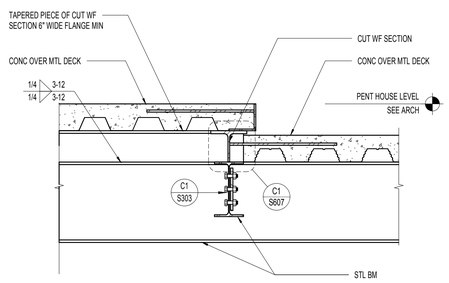

B1 / S609 STEP DETAIL
NO SCALE:

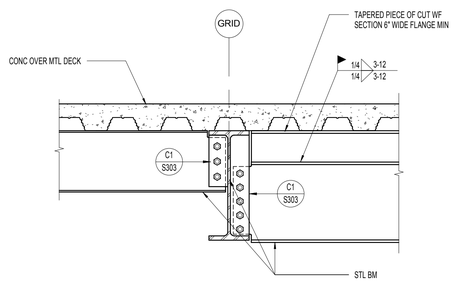

B2 / S609 LOW FRAMING BELOW PENTHOUSE
NO SCALE:

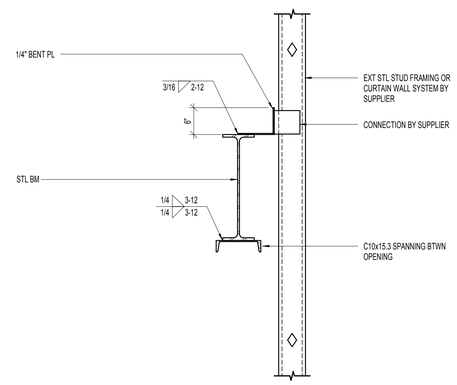

B3 / S609 EXTERIOR FRAMING AT STAIR OPENING
NO SCALE:

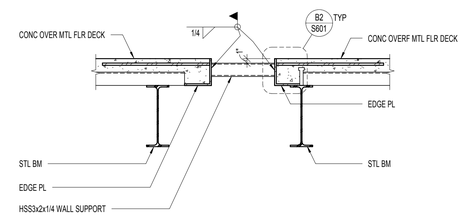

B4 / S609 WALL SUPPORT BETWEEN SHAFTS
NO SCALE:

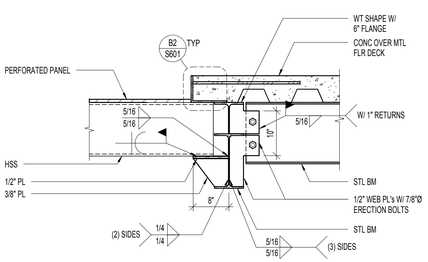

A1 / S609 CONNECTION AT LOW BEAM
NO SCALE:

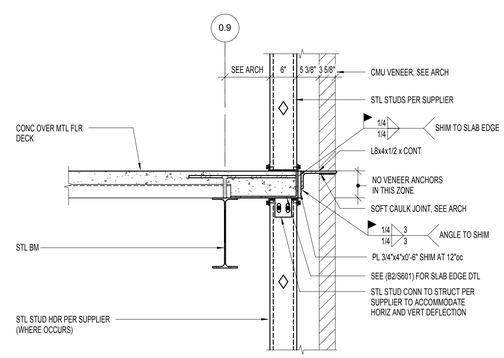

A2 / S609 BRICK LEDGE DETAIL AT CONCRETE FLOOR
NO SCALE:

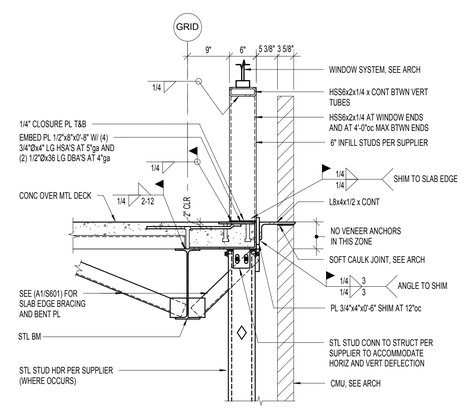

A3 / S609 BRICK LEDGE DETAIL AT CONCRETE FLOOR
NO SCALE:

APRIL 21, 2014
BID SET

NOTE:
THESE STRUCTURAL DRAWINGS ARE BASED ON ARCHITECTURAL DRAWINGS DATED APRIL 10, 2014

DIMENSIONS AND ELEVATIONS, AS THEY RELATE TO THE BUILDING IN GENERAL, i.e. GRID TO GRID DIMENSIONS OR DECK BEARING ELEVATIONS, ARE SUPPLIED BY THE ARCHITECT. THEY ARE PROVIDED ON THE STRUCTURAL PLANS AND DETAILS FOR THE CONVENIENCE OF THE CONTRACTOR. VERIFY DIMENSIONS AND ELEVATIONS WITH ARCHITECTURAL DRAWINGS.

DUNN ASSOCIATES, INC
Consulting Structural Engineers
WWW.DUNN-SE.COM
PH: 801-575-8877 FAX: 801-575-8875

CRSA
649 E. South Temple
Salt Lake City, UT 84102
801.355.5915

MWL
11798 N. Lakeridge Pkwy.
Ashland, VA 23005
804-228-7473

State of Utah
Department of Administrative Services
DFCM
Division of Facilities Construction & Management
4110 State Office Building
Salt Lake City, Utah 84114
Phone: (801) 538 - 3018
Fax: (801) 538 - 3267

DIVISION OF FACILITIES CONSTRUCTION AND MANAGEMENT
REVIEWED FOR CODE COMPLIANCE
SIGNATURE: Ernie Cate
DATE: 08-05-2014

PROFESSIONAL STRUCTURAL ENGINEER
No. 295747
TAIT A. KETCHAM
04/21/2014
STATE OF UTAH

ARCHITECT-ENGINEER STAMP

Unified State Laboratory Module 2

4451 South 2700 West, Taylorsville, UT 84118

DFCM #:	13020300
Project #:	13062
DATE:	ISSUE TYPE:
APRIL 21, 2014	BID SET
CHECKED BY	TAK
DRAWN BY	SJS

FLOOR FRAMING DETAILS

S609

VOLUME 1

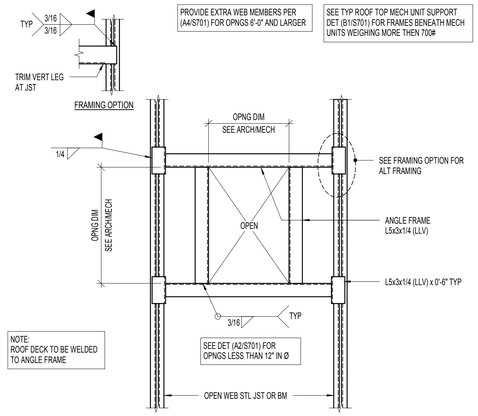

C1 S701 TYPICAL ROOF OPENING OR MECHANICAL UNIT WEIGHING LESS THAN 700#

NO SCALE:

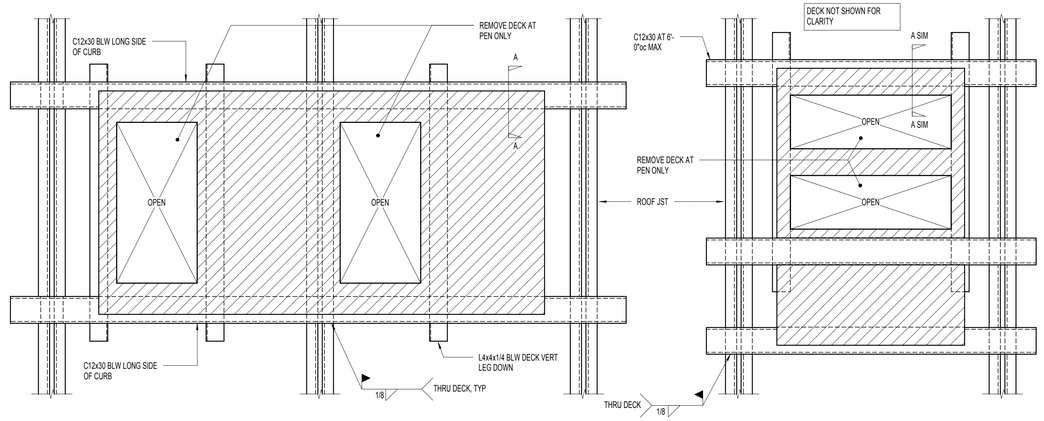

C2 S701 TYPICAL ROOF OPENING OR MECHANICAL UNITS (PLAN VIEW)

NO SCALE:

MECHANICAL UNIT SUPPORT NOTES

1. INSTALL CHANNEL FROM TOP SIDE ABOVE DECK, LOCATE IN DECK FLUTES ADJUSTING SPACING IN 6" INCREMENTS TO SUPPORT LONG SIDE OF CURB.
2. POSITION CURB OVER CHANNELS AND LOCATE REQUIRED DUCT PENETRATIONS THRU ROOF. REFER TO MECHANICAL PLANS FOR EXACT SIZES AND LOCATIONS.
3. POSITION ANGLES BELOW DECK AND WELD TO CHANNELS THRU DECK FROM TOP SIDE. OMIT CROSS ANGLES IF EDGES OF PENETRATION IS WITHIN 6" OF A JOIST.
4. CUT ROOF DECK ONLY AS REQUIRED FOR DUCT PENETRATIONS.

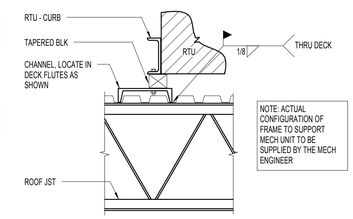

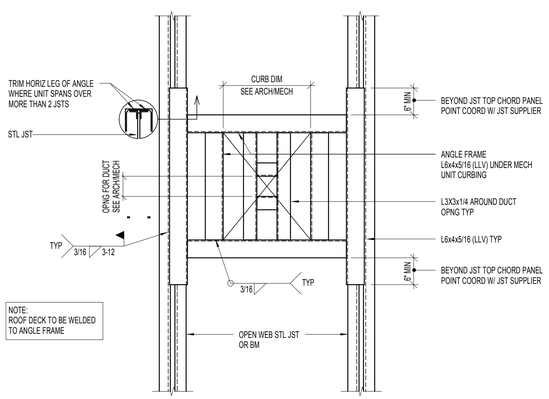

B1 S701 TYPICAL ROOF TOP MECHANICAL UNIT WEIGHING MORE THAN 700#

NO SCALE:

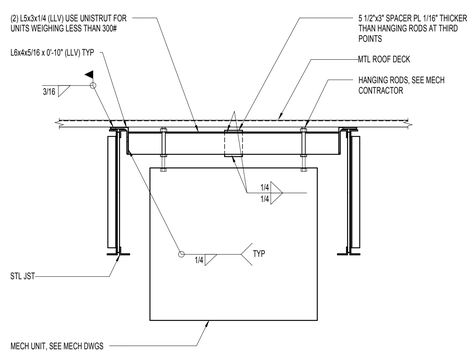

B2 S701 HANGING MECHANICAL UNIT

NO SCALE: (FOR UNITS WEIGHING 2500#'S OR LESS)

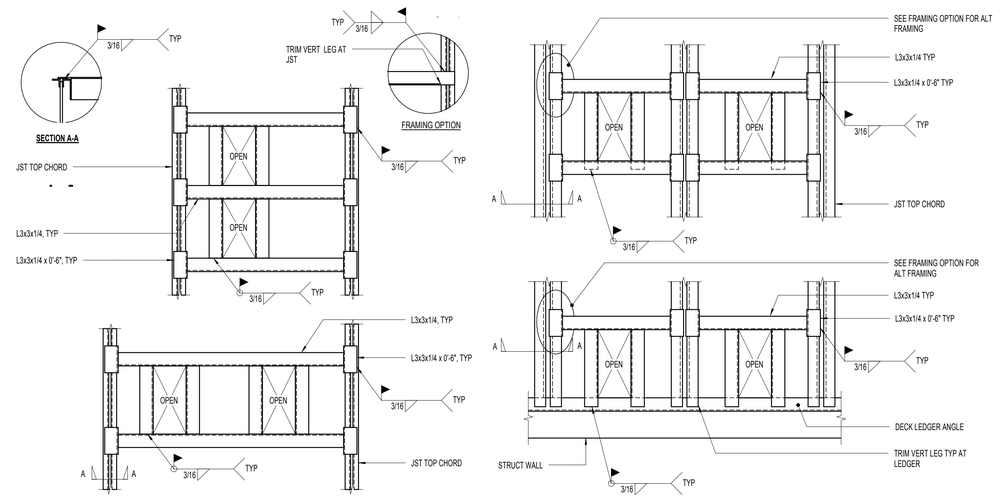

B3 S701 TYPICAL ROOF DRAIN SUPPORT (PLAN VIEW)

NO SCALE:

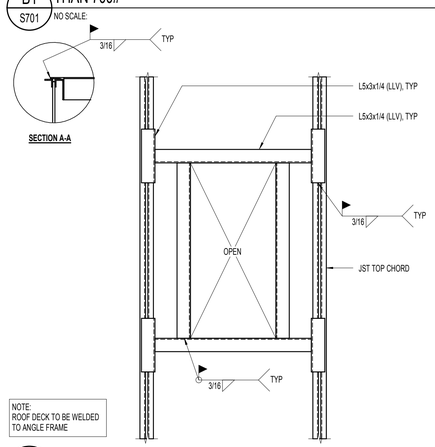

A1 S701 SKYLIGHT FRAMING (4'x8' SKYLIGHTS)

NO SCALE:

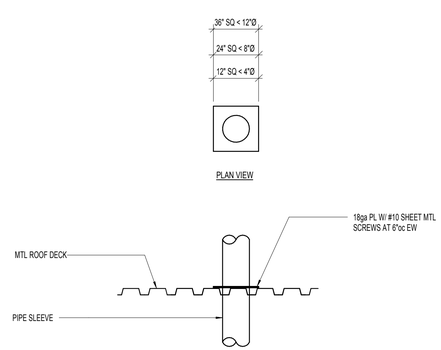

A2 S701 TYPICAL PIPE SLEEVE HOLE DETAIL (12"Ø OR LESS) THRU ROOF DECK

NO SCALE:

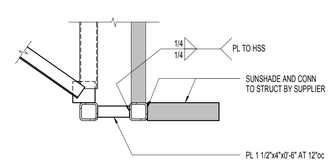

A3 S701 DETAIL

NO SCALE:

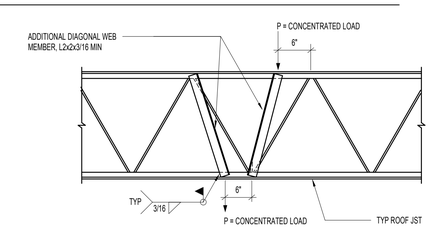

A4 S701 TYPICAL JOIST REINFORCING

NO SCALE:

NOTE: WHERE CONCENTRATED LOADS ON OPEN WEB JSTS ARE LOCATED MORE THAN 6" FROM THE PANEL POINTS AT EITHER THE TOP OR BOTT CHORD, ADDITIONAL DIAGONAL WEB MEMBERS SHALL BE FURNISHED AND INSTALLED BY THE CONTRACTOR AT THE LOCATION OF THE CONCENTRATED LOAD

APRIL 21, 2014
BID SET

NOTE: THESE STRUCTURAL DRAWINGS ARE BASED ON ARCHITECTURAL DRAWINGS DATED APRIL 10, 2014

DIMENSIONS AND ELEVATIONS, AS THEY RELATE TO THE BUILDING IN GENERAL, i.e. GRID TO GRID DIMENSIONS OR DECK BEARING ELEVATIONS, ARE SUPPLIED BY THE ARCHITECT. THEY ARE PROVIDED ON THE STRUCTURAL PLANS AND DETAILS FOR THE CONVENIENCE OF THE CONTRACTOR. VERIFY DIMENSIONS AND ELEVATIONS WITH ARCHITECTURAL DRAWINGS.

DUNN ASSOCIATES, INC
Consulting Structural Engineers
WWW.DUNN-SE.COM
PH: 801-575-8877 FAX: 801-575-8875

CRSA
649 E. South Temple
Salt Lake City, UT 84102
801.355.5915

MWL
11798 N. Lakeridge Pkwy.
Ashland, VA 23005
804-228-7473

State of Utah
Department of Administrative Services
Division of Facilities Construction & Management
4110 State Office Building
Salt Lake City, Utah 84114
Phone: (801) 538 - 3018
Fax: (801) 538 - 3267

DIVISION OF FACILITIES CONSTRUCTION AND MANAGEMENT
REVIEWED FOR CODE COMPLIANCE
SIGNATURE: Ernie Gelfe
DATE: 08-05-2014

PROFESSIONAL STRUCTURAL ENGINEER
No. 295747
TAIT A. KETCHAM
04/21/2014
STATE OF UTAH

ARCHITECT-ENGINEER STAMP

Unified State Laboratory Module 2
4451 South 2700 West, Taylorsville, UT 84118

DFCM #: 13020300
Project #: 13062

DATE:	ISSUE TYPE:
APRIL 21, 2014	BID SET
CHECKED BY	TAK
DRAWN BY	SJS

ROOF FRAMING DETAILS

S701
VOLUME 1

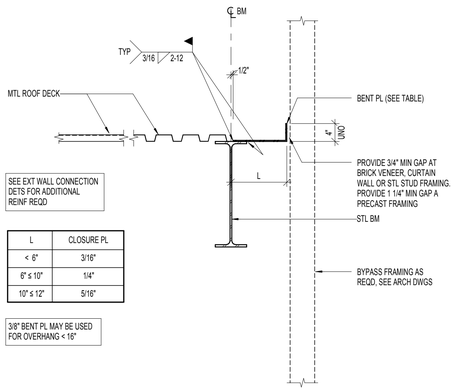

SEE EXT WALL CONNECTION DETS FOR ADDITIONAL REINF REQD

L	CLOSURE PL
< 6"	3/16"
6" ≤ 10"	1/4"
10" ≤ 12"	5/16"

3/8" BENT PL MAY BE USED FOR OVERHANG < 16"

C1 / S702 TYPICAL CLOSURE PLATE (OVERHANG "L" ≤ 12")

NO SCALE:

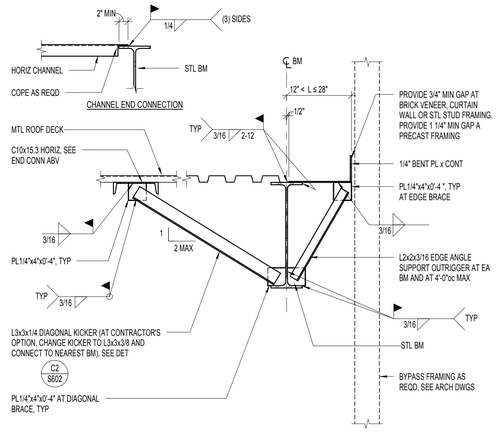

C2 / S702 TYPICAL CLOSURE PLATE (OVERHANG 12" < "L" ≤ 28")

NO SCALE:

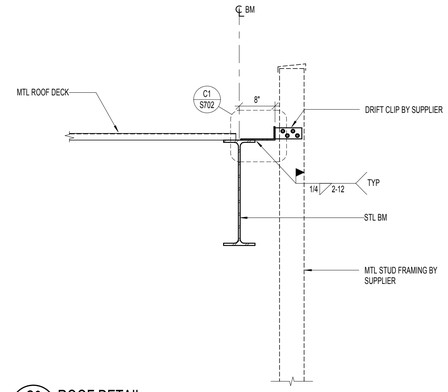

C3 / S702 ROOF DETAIL

NO SCALE:

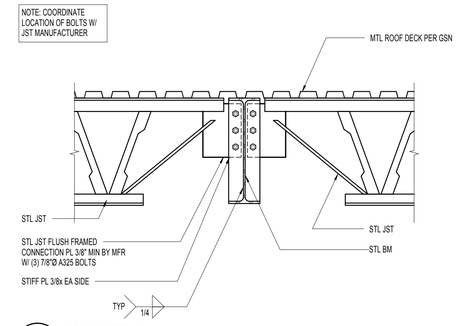

C4 / S702 ROOF DETAIL

NO SCALE:

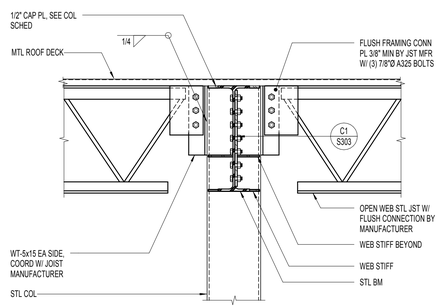

B1 / S702 TYPICAL BOLTED CONNECTION TO HSS COLUMN

NO SCALE:

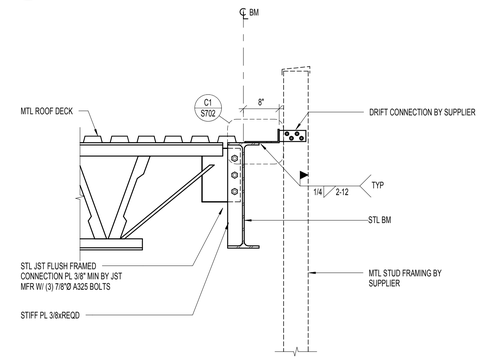

B2 / S702 ROOF DETAIL

NO SCALE:

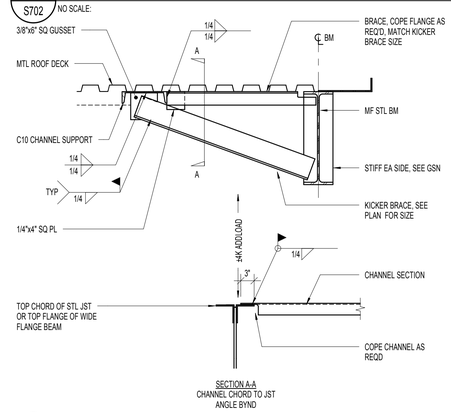

B3 / S702 MOMENT FRAME BEAM BRACE

NO SCALE:

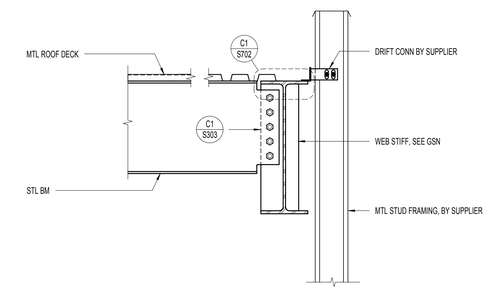

B4 / S702 TYPICAL BEAM CONN

NO SCALE:

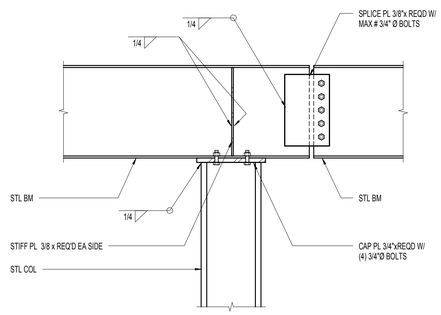

A1 / S702 ROOF DETAIL

NO SCALE:

APRIL 21, 2014
BID SET

NOTE:
THESE STRUCTURAL DRAWINGS ARE BASED ON ARCHITECTURAL DRAWINGS DATED APRIL 10, 2014

DIMENSIONS AND ELEVATIONS, AS THEY RELATE TO THE BUILDING IN GENERAL, i.e. GRID TO GRID DIMENSIONS OR DECK BEARING ELEVATIONS, ARE SUPPLIED BY THE ARCHITECT. THEY ARE PROVIDED ON THE STRUCTURAL PLANS AND DETAILS FOR THE CONVENIENCE OF THE CONTRACTOR. VERIFY DIMENSIONS AND ELEVATIONS WITH ARCHITECTURAL DRAWINGS.

DUNN ASSOCIATES, INC
Consulting Structural Engineers
WWW.DUNN-SE.COM
PH: 801-575-8877 FAX: 801-575-8875

CRSA
649 E. South Temple
Salt Lake City, UT 84102
801.355.5915

MWL
11798 N. Lakeridge Pkwy.
Ashland, VA 23005
804-228-7473

State of Utah
Department of Administrative Services
Division of Facilities Construction & Management
4110 State Office Building
Salt Lake City, Utah 84114
Phone: (801) 538 - 3018
Fax: (801) 538 - 3267

DIVISION OF FACILITIES CONSTRUCTION AND MANAGEMENT
REVIEWED FOR CODE COMPLIANCE
SIGNATURE: Ernie Gelfe
DATE: 08-05-2014

PROFESSIONAL STRUCTURAL ENGINEER
No. 295747
TAIT A. KETCHAM
04/21/2014
STATE OF UTAH

ARCHITECT-ENGINEER STAMP

Unified State Laboratory Module 2

4451 South 2700 West, Taylorsville, UT 84118

DFCM #:	13020300
Project #:	13062
DATE:	ISSUE TYPE:
APRIL 21, 2014	BID SET
CHECKED BY	TAK
DRAWN BY	SJS

ROOF FRAMING DETAILS

S702

VOLUME 1

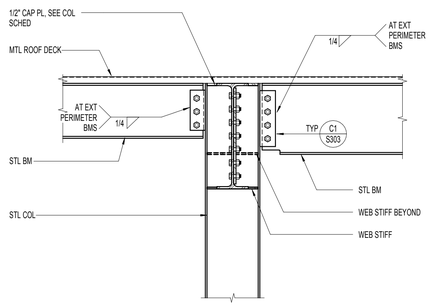

C1 S703 TYPICAL BOLTED CONNECTION TO STEEL COLUMN FLANGE
NO SCALE:

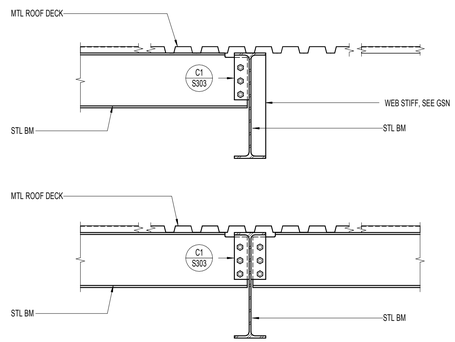

C2 S703 TYPICAL STEEL BEAM TO STEEL BEAM CONNECTION DETAILS
NO SCALE:

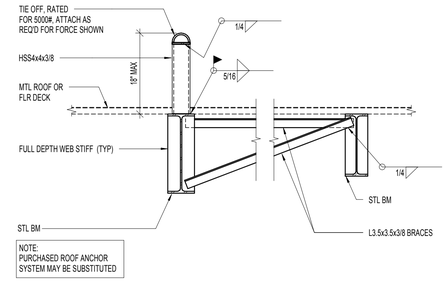

C3 S703 ROOF ANCHOR TIE-OFF DETAIL
NO SCALE:

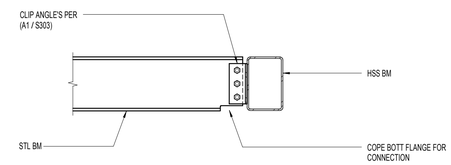

C4 S703 BEAM TO HSS CONNECTION
NO SCALE:

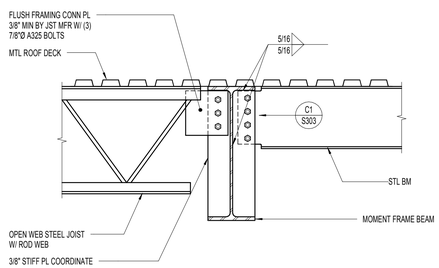

B1 S703 BEAM AT OPEN WEB JOIST
NO SCALE:

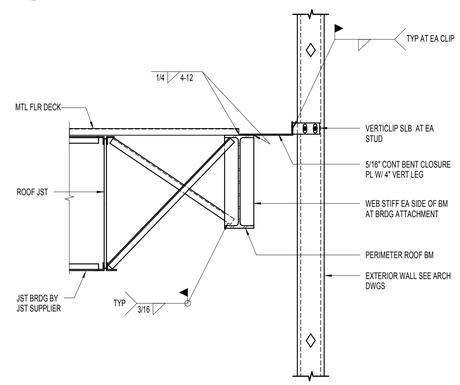

B2 S703 TYPICAL BRIDGING DETAIL
NO SCALE:

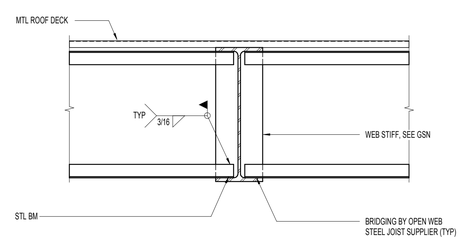

B3 S703 TYPICAL BRIDGING TO STEEL BEAM
NO SCALE:

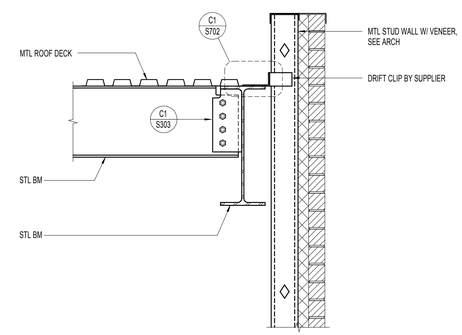

B4 S703 MECHANICAL ROOM EXPANSION PARAPET
NO SCALE:

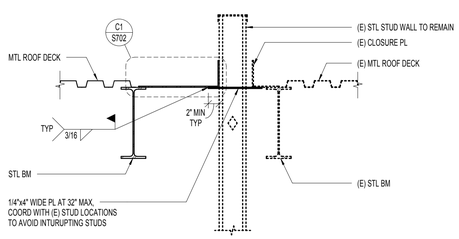

A1 S703 METAL ROOF DECK CONNECTION AT MECHANICAL ROOM EXPANSION
NO SCALE:

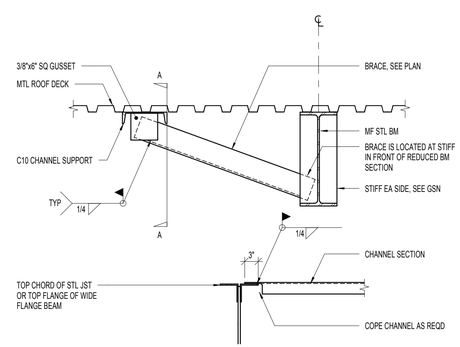

A2 S703 BRACE AT FRAME BEAM
NO SCALE:

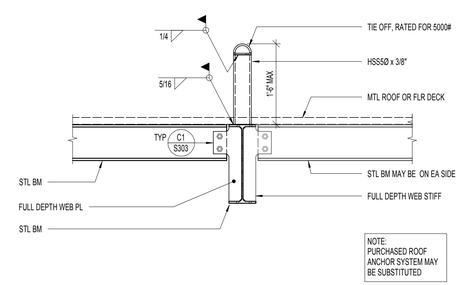

A3 S703 ROOF ANCHOR TIE OFF AT BEAM CONNECTION
NO SCALE:

APRIL 21, 2014
BID SET

NOTE:
THESE STRUCTURAL DRAWINGS ARE BASED ON ARCHITECTURAL DRAWINGS DATED APRIL 10, 2014

DIMENSIONS AND ELEVATIONS, AS THEY RELATE TO THE BUILDING IN GENERAL, i.e. GRID TO GRID DIMENSIONS OR DECK BEARING ELEVATIONS, ARE SUPPLIED BY THE ARCHITECT. THEY ARE PROVIDED ON THE STRUCTURAL PLANS AND DETAILS FOR THE CONVENIENCE OF THE CONTRACTOR. VERIFY DIMENSIONS AND ELEVATIONS WITH ARCHITECTURAL DRAWINGS.

DUNN ASSOCIATES, INC
Consulting Structural Engineers
WWW.DUNN-SE.COM
PH: 801-575-8877 FAX: 801-575-8875

CRSA
649 E. South Temple
Salt Lake City, UT 84102
801.355.5915

MWL
11798 N. Lakeridge Pkwy.
Ashland, VA 23005
804-228-7473

State of Utah
Department of Administrative Services
Division of Facilities Construction & Management
4110 State Office Building
Salt Lake City, Utah 84114
Phone: (801) 538 - 3018
Fax: (801) 538 - 3267

DIVISION OF FACILITIES CONSTRUCTION AND MANAGEMENT
REVIEWED FOR CODE COMPLIANCE
SIGNATURE: Ernie Calle
DATE: 08-05-2014

PROFESSIONAL STRUCTURAL ENGINEER
No. 295747
TAIT A. KETCHAM
04/21/2014
STATE OF UTAH

ARCHITECT-ENGINEER STAMP

Unified State Laboratory Module 2
4451 South 2700 West, Taylorsville, UT 84118

DFCM #:	13020300
Project #:	13062
DATE:	ISSUE TYPE:
APRIL 21, 2014	BID SET
CHECKED BY	TAK
DRAWN BY	SJS

ROOF FRAMING DETAILS

S703
VOLUME 1

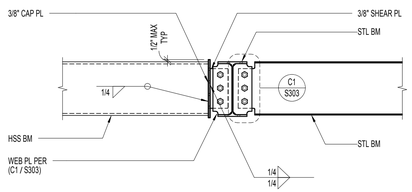

C1 S704 HSS BEAM CONNECTION
NO SCALE:

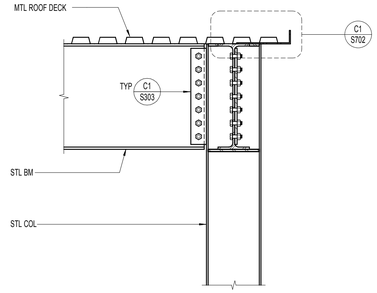

C2 S704 TYPICAL BOLTED CONNECTION TO STEEL COLUMN FLANGE
NO SCALE:

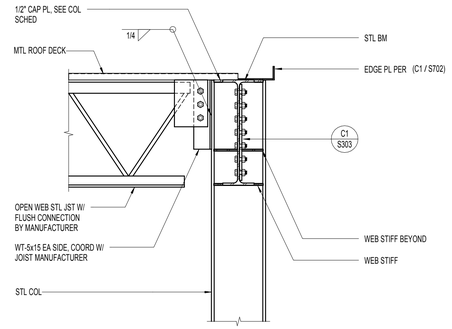

C3 S704 TYPICAL BOLTED CONNECTION TO STEEL COLUMN
NO SCALE:

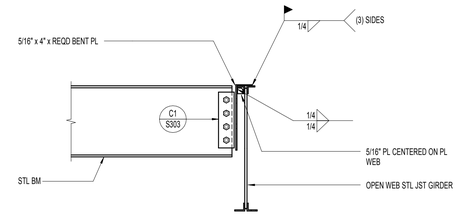

C4 S704 TYPICAL STEEL BEAM TO OPEN WEB JOIST
NO SCALE:

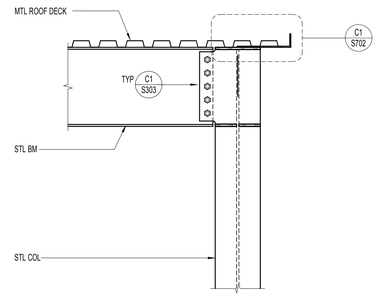

B1 S704 ROOF FRAMING DETAIL
NO SCALE:

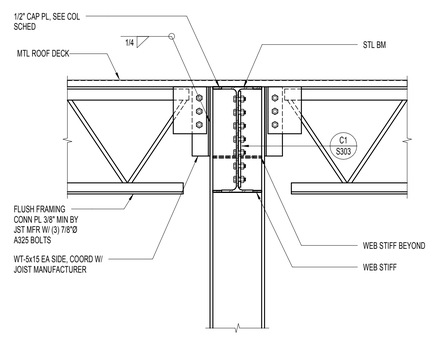

B2 S704 TYPICAL BOLTED CONNECTION TO STEEL COLUMN
NO SCALE:

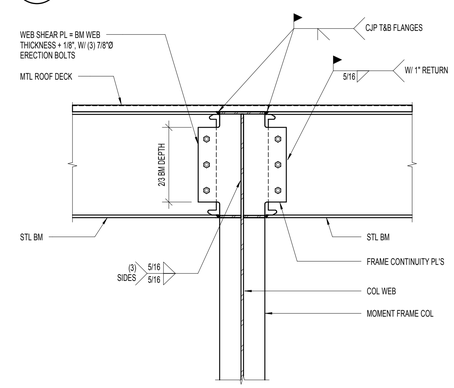

B3 S704 CANTILEVERED BEAM AT FRAME COLUMN AT ROOF
NO SCALE:

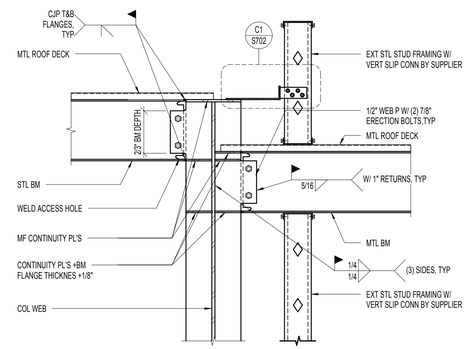

B4 S704 ROOF STEP AT GRID 15
NO SCALE:

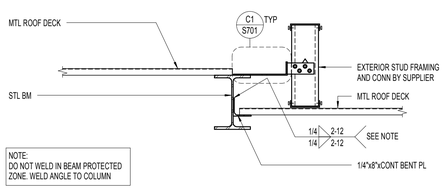

A1 S704 ROOF STEP
NO SCALE:

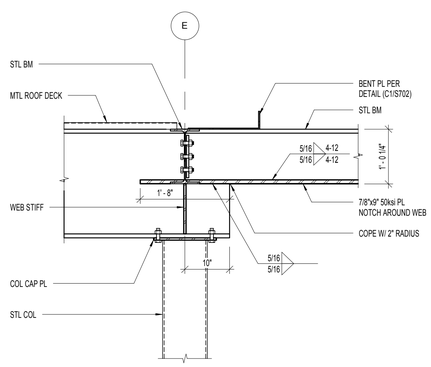

A2 S704 BEAM COPE AT CANTILEVER
NO SCALE:

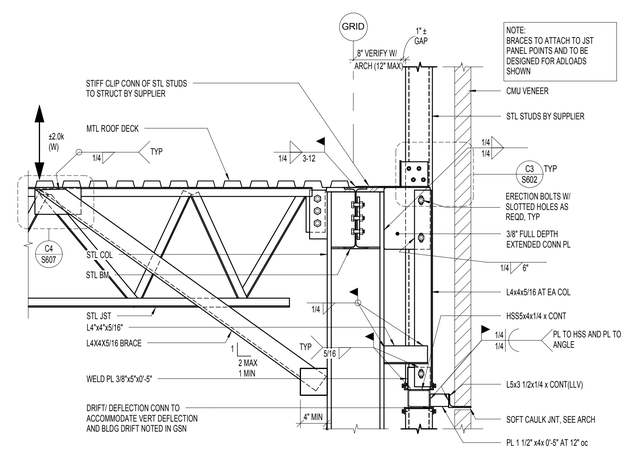

A3 S704 TYPICAL PERIMETER DETAIL AT STEEL COLUMN
NO SCALE:

APRIL 21, 2014
BID SET

NOTE:
THESE STRUCTURAL DRAWINGS ARE BASED ON ARCHITECTURAL DRAWINGS DATED APRIL 10, 2014

DIMENSIONS AND ELEVATIONS, AS THEY RELATE TO THE BUILDING IN GENERAL, i.e. GRID TO GRID DIMENSIONS OR DECK BEARING ELEVATIONS, ARE SUPPLIED BY THE ARCHITECT. THEY ARE PROVIDED ON THE STRUCTURAL PLANS AND DETAILS FOR THE CONVENIENCE OF THE CONTRACTOR. VERIFY DIMENSIONS AND ELEVATIONS WITH ARCHITECTURAL DRAWINGS.

DUNN ASSOCIATES, INC
Consulting Structural Engineers
WWW.DUNN-SE.COM
PH: 801-575-8677 FAX: 801-575-8875

CRSA
649 E. South Temple
Salt Lake City, UT 84102
801.355.5915

MWL
11798 N. Lakeridge Pkwy.
Ashland, VA 23005
804-228-7473

State of Utah
Department of Administrative Services
DFCM
Division of Facilities Construction & Management
4110 State Office Building
Salt Lake City, Utah 84114
Phone: (801) 538 - 3018
Fax: (801) 538 - 3267

DIVISION OF FACILITIES CONSTRUCTION AND MANAGEMENT
REVIEWED FOR CODE COMPLIANCE
SIGNATURE: Ernie Calle
DATE: 08-05-2014

PROFESSIONAL STRUCTURAL ENGINEER
No. 295747
TAIT A. KETCHAM
04/21/2014
STATE OF UTAH

ARCHITECT-ENGINEER STAMP

Unified State Laboratory Module 2

4451 South 2700 West, Taylorsville, UT 84118

DFCM #:	13020300
Project #:	13062
DATE:	ISSUE TYPE:
APRIL 21, 2014	BID SET
CHECKED BY	TAK
DRAWN BY	SJS

ROOF FRAMING DETAILS

S704

VOLUME 1

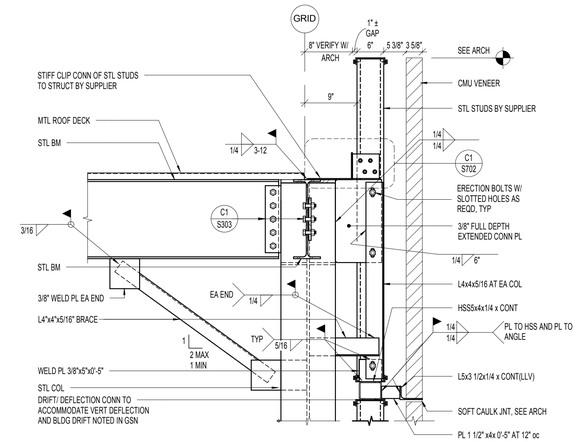

C1 / S705 TYPICAL SPANDREL CONDITION AT STEEL COLUMN

NO SCALE:

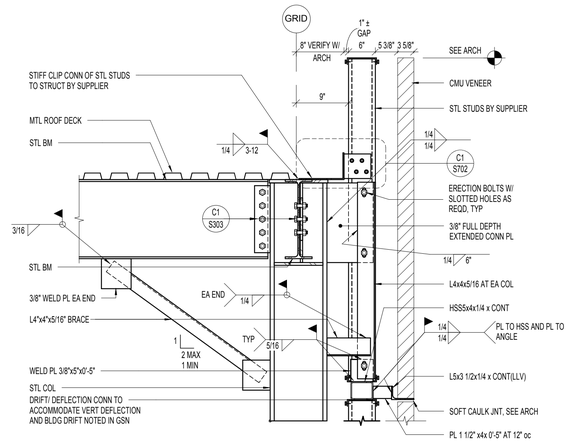

C2 / S705 TYPICAL SPANDREL CONDITION AT STEEL COLUMN

NO SCALE:

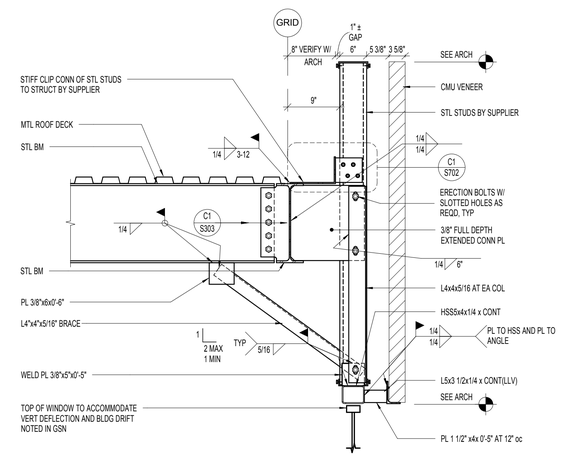

C3 / S705 TYPICAL SPANDREL CONDITION AT ROOF FRAMING PERPENDICULAR TO EXTERIOR

NO SCALE:

APRIL 21, 2014
BID SET

NOTE:
THESE STRUCTURAL DRAWINGS ARE BASED ON ARCHITECTURAL DRAWINGS DATED APRIL 10, 2014

DIMENSIONS AND ELEVATIONS, AS THEY RELATE TO THE BUILDING IN GENERAL, i.e. GRID TO GRID DIMENSIONS OR DECK BEARING ELEVATIONS, ARE SUPPLIED BY THE ARCHITECT. THEY ARE PROVIDED ON THE STRUCTURAL PLANS AND DETAILS FOR THE CONVENIENCE OF THE CONTRACTOR. VERIFY DIMENSIONS AND ELEVATIONS WITH ARCHITECTURAL DRAWINGS.

DUNN ASSOCIATES, INC
Consulting Structural Engineers
WWW.DUNN-SE.COM
PH: 801-575-8877 FAX: 801-575-8875

CRSA
649 E. South Temple
Salt Lake City, UT 84102
801.355.5915

MWL
11798 N. Lakeridge Pkwy.
Ashland, VA 23005
804-228-7473

State of Utah
Department of Administrative Services
Division of Facilities Construction & Management
4110 State Office Building
Salt Lake City, Utah 84114
Phone: (801) 538 - 3018
Fax: (801) 538 - 3267

DIVISION OF FACILITIES CONSTRUCTION AND MANAGEMENT
REVIEWED FOR CODE COMPLIANCE
SIGNATURE: Ernie Gulf
DATE: 08-05-2014

PROFESSIONAL STRUCTURAL ENGINEER
No. 295747
TAIT A. KETCHAM
04/21/2014
STATE OF UTAH

ARCHITECT-ENGINEER STAMP

Unified State Laboratory Module 2

4451 South 2700 West, Taylorsville, UT 84118

DFCM #: 13020300

Project #: 13062

DATE:	ISSUE TYPE:
APRIL 21, 2014	BID SET

CHECKED BY	TAK
DRAWN BY	SJS

ROOF FRAMING DETAILS

S705

VOLUME 1

SYMBOLS LEGEND

1 / XX / XXXX	INTERIOR ELEVATION
XX / XXXX	BUILDING ELEVATION
X / XXXX	BUILDING SECTION
XX / XXXX	WALL SECTION
XX / XXXX	DETAIL CALLOUT
XX / XXXX	CALLOUT
X	KEYNOTE
XXXX	DOOR TAG
XX	WALL TYPE
Room Name / XXX	ROOM TAG
X	GLASS TYPE
	ELEVATION MARKER
XX	WINDOW TYPE
℄	CENTER LINE
X	GRID
N	NORTH ARROW
FINISH X-X / CEILING HEIGHT X-X	CEILING TYPE
FLOOR FINISH / WALL FINISH W F B / BASE FINISH	FINISHES

MATERIAL LEGEND

	CONCRETE
	MASONRY
	STEEL
	BATT INSULATION
	RIGID INSULATION
	FINISH GRADE WOOD / HARDWOOD
	PLYWOOD
	SPRAY FOAM INSULATION
	DEMOLITION, SHOWN VIA BOLD HIDDEN LINE

NOTE: ALL MATERIALS REFERENCED ARE NEW UNLESS NOTED OTHERWISE

DIMENSION LEGEND

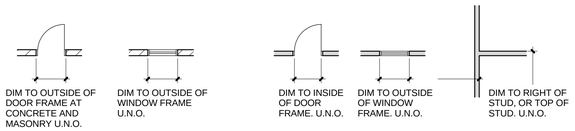

CONC & MASONRY WALLS

FRAMED WALLS

ABBREVIATIONS

A	
ADJ	ADJUSTABLE
AFF	ABOVE FINISH FLOOR
AL.	ALUMINUM
A.B.	ANCHOR BOLT
&	AND
L	ANGLE
@	AT
B	
BLKG	BLOCKING
BLDG	BUILDING
C	
CAB	CABINET
CLG	CEILING
CL	CENTER LINE
C	CHANNEL
COL	COLUMN
CONC	CONCRETE
CONT	CONTINUOUS
CMP	CORRUGATED METAL PIPE
D	
DIA	DIAMETER
DBL	DOUBLE
E	
EA	EACH
ELEC	ELECTRICAL
ELEV	ELEVATION
F	
FEC	FIRE EXTINGUISHER CAB
FD	FLOOR DRAIN
FF	FINISH FLOOR
FTG	FOOTING
FDN	FOUNDATION
FS	FINISH
F.V.	FIELD VERIFY
G	
GI	GALVANIZED IRON
GA	GAUGE
GYP BD	GYPSUM BOARD
H	
HOR	HORIZONTAL
HM	HOLLOW METAL
HR	HOUR
HDWD	HARDWOOD
I	
IBC	INTERNATIONAL BUILDING CODE
ID	INSIDE DIAMETER
INSUL	INSULATION
J	
JST	JOIST
L	
LAV	LAVATORY
M	
MAT'L	MATERIAL
MAX	MAXIMUM
MECH	MECHANICAL
MIN	MINIMUM
MISC	MISCELLANEOUS
N	
NOM	NOMINAL
NIC	NOT IN CONTRACT
NO	NUMBER
#	NUMBER
O	
O/C	ON CENTER
O.C.	ON CENTER
OPNG	OPENING
OD	OUTSIDE DIAMETER
OH	OVERHEAD
O.P.C.I	OWNER PROVIDED, CONTRACTOR INSTALLED
OPP.	OPPOSITE
P	
PLYWD	PLYWOOD
PLF	POUNDS PER LINEAL FOOT
PSF	POUNDS PER SQUARE FOOT
PSI	POUNDS PER SQUARE INCH
R	
REINF	REINFORCEMENT
REQ'D	REQUIRED
S	
SC	SOLID CORE
SGL	SINGLE
SHT	SHEET
SHTG	SHEATHING
SIM	SIMILAR
SOG	SLAB ON GRADE
SOD	SLAB ON DECK
SPEC	SPECIFICATION
SQ	SQUARE
SS	STAINLESS STEEL
STD	STANDARD
STG	STORAGE
T	
TYP	TYPICAL
T.O.B.	TOP OF BEAM
U	
U.N.O.	UNLESS NOTED ORTHERWISE
V	
VER	VERTICAL
W	
W/	WITH
WD	WOOD

CRSA

649 E. South Temple
Salt Lake City, UT 84102
801.355.5915

MWL

11798 N. Lakeridge Pkwy.
Ashland, VA 23005
804-228-7473

State of Utah
Department of Administrative Services

Division of Facilities Construction & Management
4110 State Office Building
Salt Lake City, Utah 84114
Phone: (801) 538 - 3018
Fax: (801) 538 - 3267

DIVISION OF FACILITIES CONSTRUCTION AND MANAGEMENT
REVIEWED FOR CODE COMPLIANCE
SIGNATURE: Ernie Calle
DATE: 08-05-2014

STATE OF UTAH #134096 MEHRDAD SAMIE LICENSED ARCHITECT
04-28-2014
ARCHITECT-ENGINEER STAMP

Unified State Laboratory Module 2

4451 South 2700 West, Taylorsville, UT 84118

DFCM #: 13020300

Project #: B13-024

DATE:	ISSUE TYPE:
APRIL 21, 2014	BID SET

CHECKED BY	J. NIELSEN
DRAWN BY	F. PITORE

GENERAL NOTES & LEGENDS

AE001

VOLUME 1

C:\Users\fernando\Documents_A_13024_Modil_2013_fernando.rvt
7/14/2014 12:18:28 PM

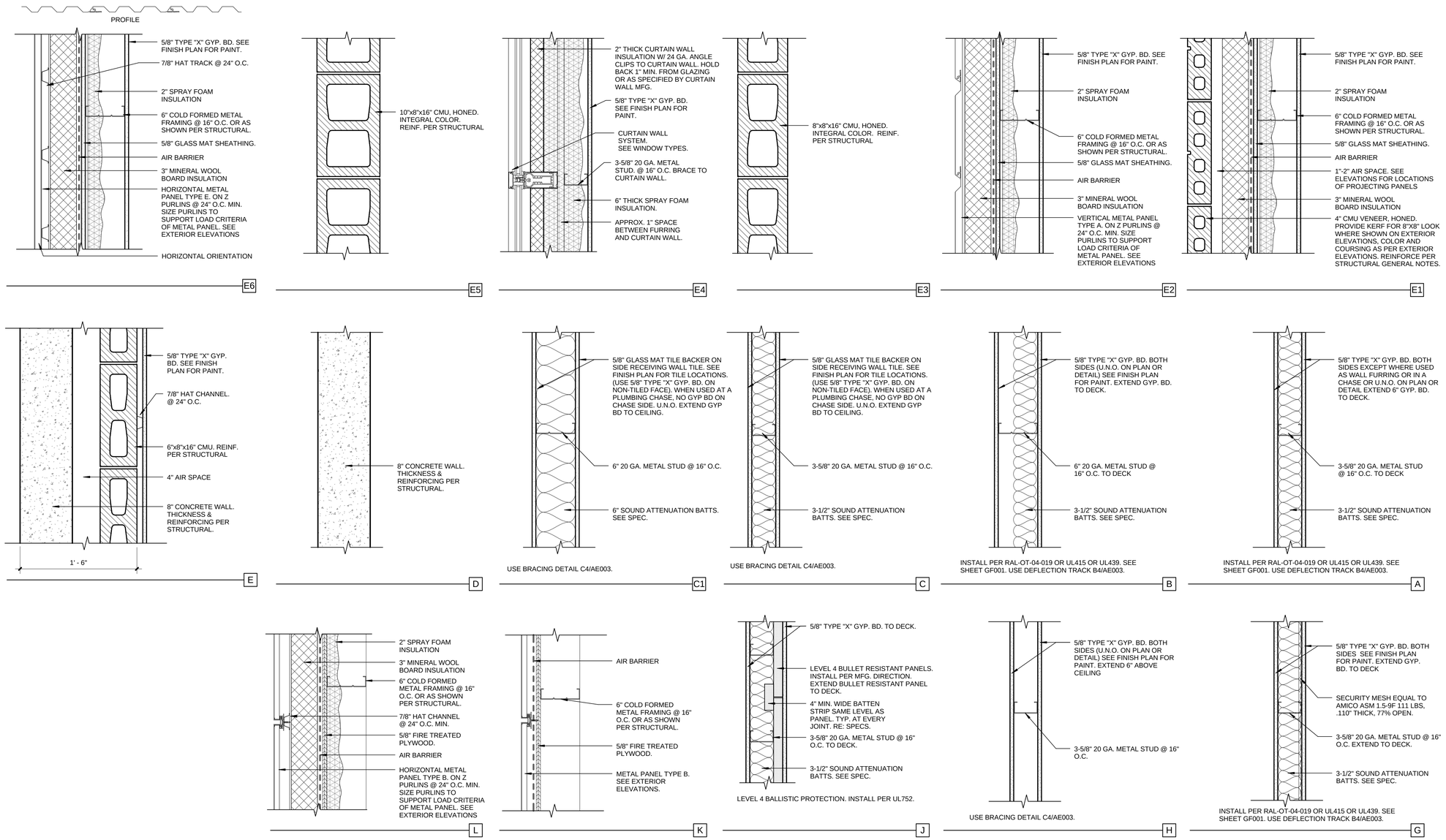

CRSA
649 E. South Temple
Salt Lake City, UT 84102
801.355.5915

MWL
11798 N. Lakeridge Pkwy.
Ashland, VA 23005
804-228-7473

State of Utah
Department of Administrative Services
Division of Facilities Construction & Management
4110 State Office Building
Salt Lake City, Utah 84114
Phone: (801) 538 - 3018
Fax: (801) 538 - 3267

DIVISION OF FACILITIES CONSTRUCTION AND MANAGEMENT
REVIEWED FOR CODE COMPLIANCE
SIGNATURE: Ernie Gelfe
DATE: 08-05-2014

STATE OF UTAH #134096 MEHRDAD SAMIE LICENSED ARCHITECT
04-28-2014
ARCHITECT-ENGINEER STAMP

Unified State Laboratory Module 2

4451 South 2700 West, Taylorsville, UT 84118

DFCM #: 13020300

Project #: B13-024

DATE:	ISSUE TYPE:
APRIL 21, 2014	BID SET
CHECKED BY	J. NIELSEN
DRAWN BY	F. PITORE

WALL TYPES

AE002

VOLUME 1

C:\Users\fernando\Documents_A_13024_Modil_2013_fernando.rvt
7/14/2014 12:18:38 PM

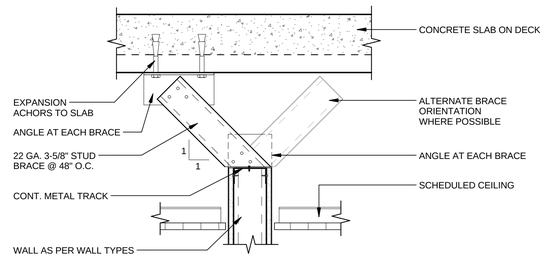

BRACING PARTITION WALL (C4 / AE003)

1 1/2" = 1'-0"

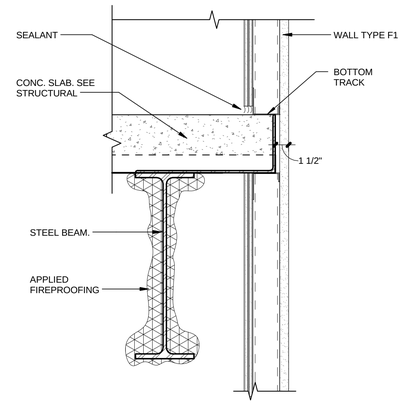

RATED WALL & BEAM DETAIL (C5 / AE003)

1 1/2" = 1'-0"

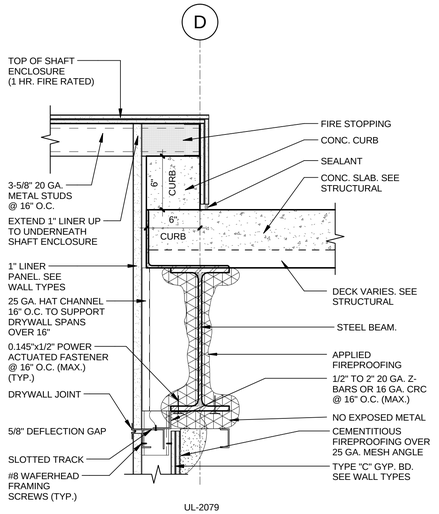

RATED WALL & BEAM DETAIL (B2 / AE003)

1 1/2" = 1'-0"

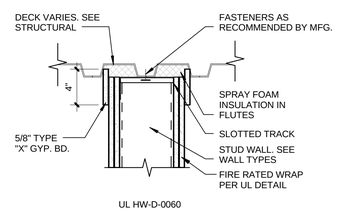

DEFLECTION TRACK DETAIL (B3 / AE003)

1 1/2" = 1'-0"

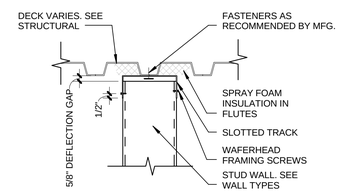

DEFLECTION TRACK DETAIL (B4 / AE003)

1 1/2" = 1'-0"

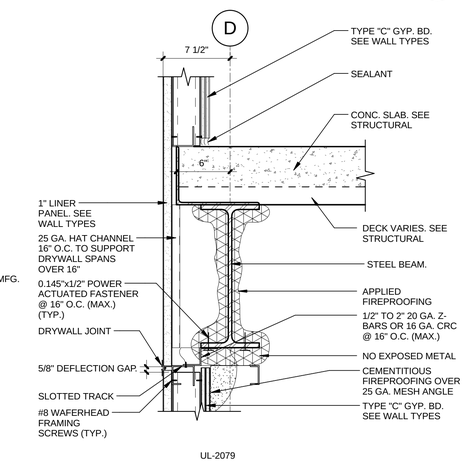

RATED WALL & BEAM DETAIL (B5 / AE003)

1 1/2" = 1'-0"

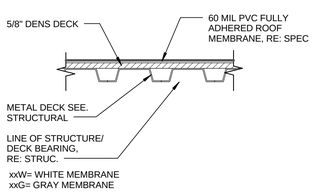

R7

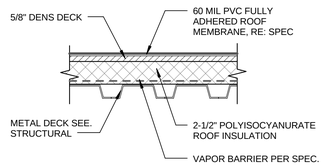

R6

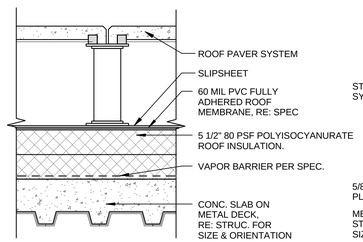

R5

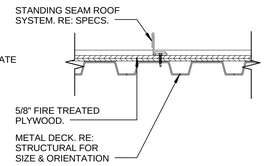

R4

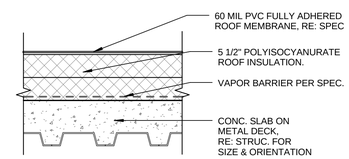

R2

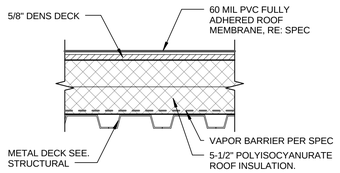

R1

CRSA
649 E. South Temple
Salt Lake City, UT 84102
801.355.5915

MWL
11798 N. Lakeridge Pkwy.
Ashland, VA 23005
804-228-7473

State of Utah
Department of Administrative Services
Division of Facilities Construction & Management
4110 State Office Building
Salt Lake City, Utah 84114
Phone: (801) 538 - 3018
Fax: (801) 538 - 3267

DIVISION OF FACILITIES CONSTRUCTION AND MANAGEMENT
REVIEWED FOR CODE COMPLIANCE
SIGNATURE:
DATE: 08-05-2014

STATE OF UTAH #134096 MEHRDAD SAMIE LICENSED ARCHITECT
04.28.2014
ARCHITECT-ENGINEER STAMP

Unified State Laboratory Module 2

4451 South 2700 West, Taylorsville, UT 84118

DFCM #: 13020300
Project #: B13-024

DATE:	ISSUE TYPE:
APRIL 21, 2014	BID SET
CHECKED BY	Checker
DRAWN BY	F. PITORE

ROOF TYPES & DETAILS

AE003

VOLUME 1

C:\Users\fernando\Documents_A_13024_Modli_2013_fernando.rvt
7/14/2014 12:18:44 PM

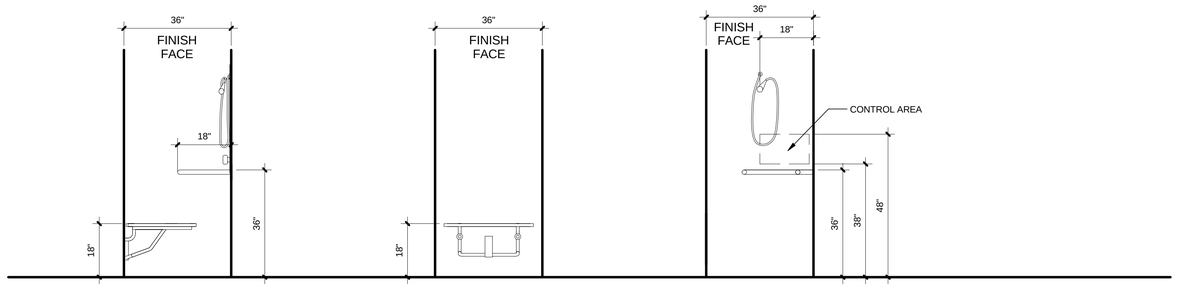

TYPICAL SHOWER FIXTURE AND ACCESSORIES MOUNTING HEIGHTS

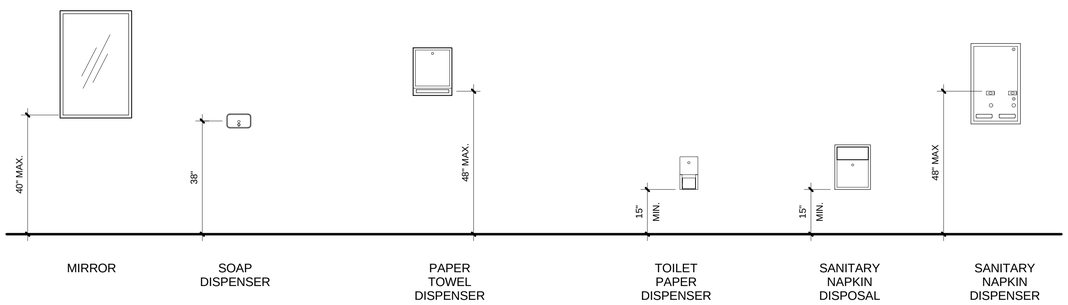

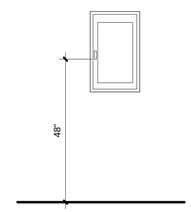

TYPICAL TOILET ACCESSORIES MOUNTING HEIGHTS

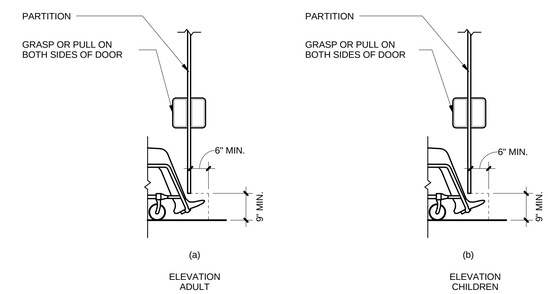

TOE CLEARANCE

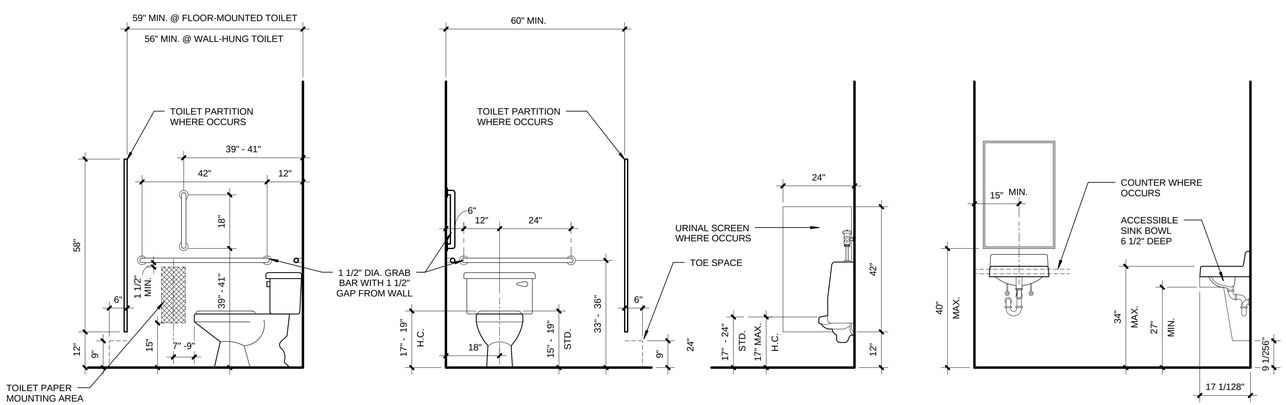

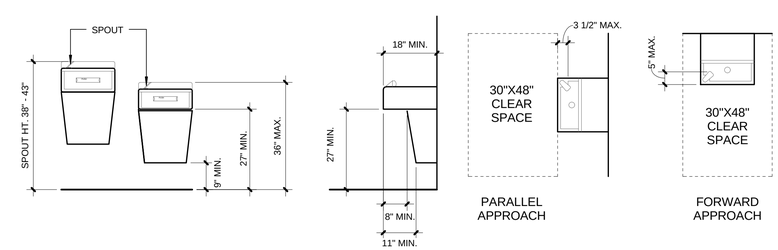

DRINKING FOUNTAIN

TYPICAL PLUMBING FIXTURES AND ACCESSORIES MOUNTING HEIGHTS

CRSA
649 E. South Temple
Salt Lake City, UT 84102
801.355.5915

MWL
11798 N. Lakeridge Pkwy.
Ashland, VA 23005
804-228-7473

State of Utah
Department of Administrative Services
Division of Facilities Construction & Management
4110 State Office Building
Salt Lake City, Utah 84114
Phone: (801) 538 - 3018
Fax: (801) 538 - 3267

DIVISION OF FACILITIES CONSTRUCTION AND MANAGEMENT
REVIEWED FOR CODE COMPLIANCE
SIGNATURE: Ernie Gelfe
DATE: 08-05-2014

STATE OF UTAH #134096 MEHRDAD SAMIE LICENSED ARCHITECT
04-28-2014
ARCHITECT-ENGINEER STAMP

Unified State Laboratory Module 2
4451 South 2700 West, Taylorsville, UT 84118

DFCM #: 13020300
Project #: B13-024

DATE:	ISSUE TYPE:
APRIL 21, 2014	BID SET
CHECKED BY	J. NIELSEN
DRAWN BY	F. PITORE

ACCESSORY MOUNTING HEIGHTS

AE004
VOLUME 1

C:\Users\fernando\Documents_A_13024_Modil_2013_fernando.rvt
7/14/2014 12:18:59 PM

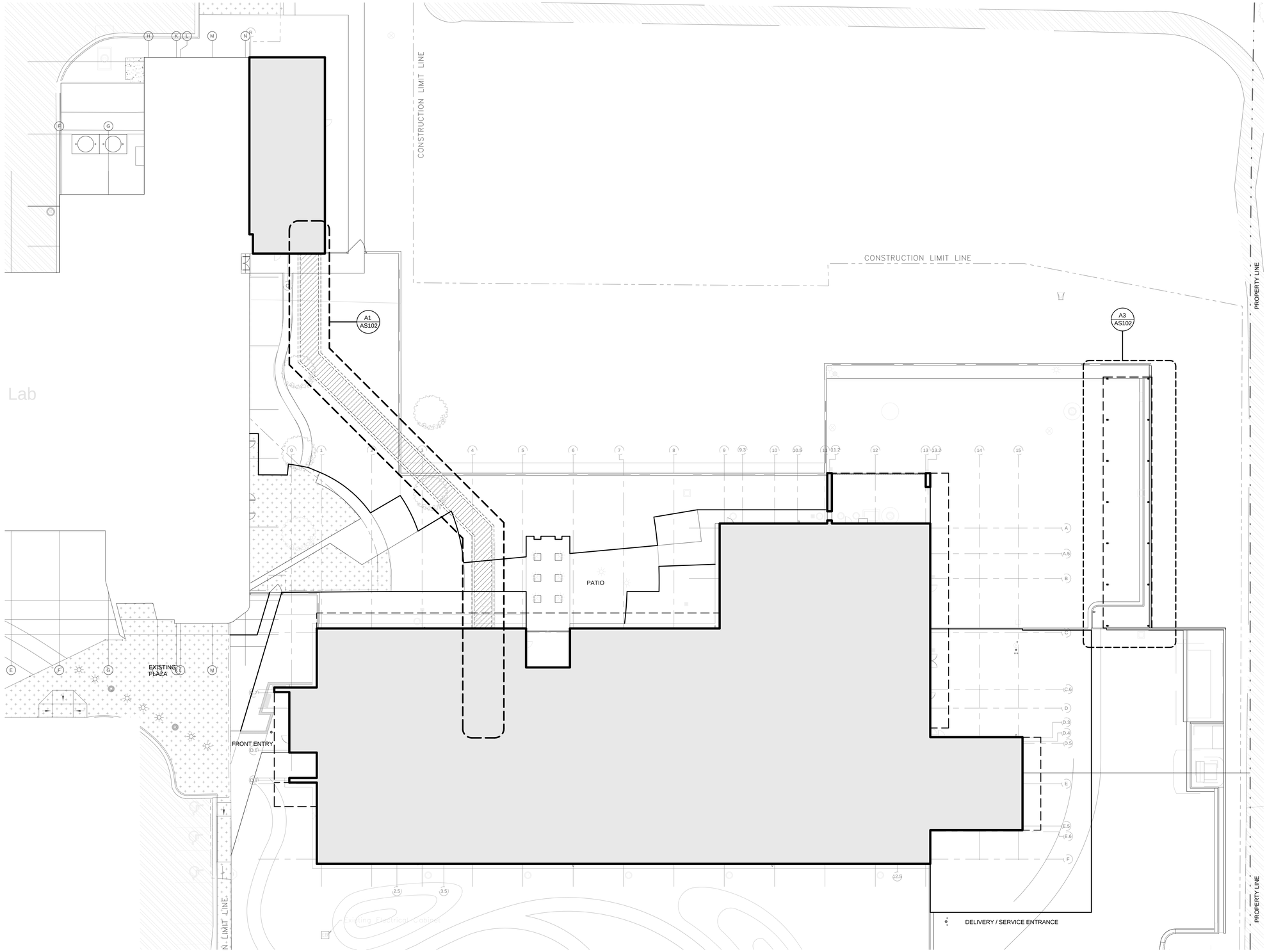

Site Plan (A5 / AS101)
1" = 20'-0"

CRSA
649 E. South Temple
Salt Lake City, UT 84102
801.355.5915

MWL
11798 N. Lakeridge Pkwy.
Ashland, VA 23005
804-228-7473

State of Utah
Department of Administrative Services
Division of Facilities Construction & Management
4110 State Office Building
Salt Lake City, Utah 84114
Phone: (801) 538 - 3018
Fax: (801) 538 - 3267

DIVISION OF FACILITIES CONSTRUCTION AND MANAGEMENT
REVIEWED FOR CODE COMPLIANCE
SIGNATURE: Ernie Gelfe
DATE: 08-05-2014

STATE OF UTAH
#134096
MEHRDAD SAMIE
LICENSED ARCHITECT
04.28.2014
ARCHITECT-ENGINEER STAMP

Unified State Laboratory Module 2

4451 South 2700 West,
Taylorsville, UT 84118

DFCM #:	13020300
Project #:	B13-024
DATE:	ISSUE TYPE:
APRIL 21, 2014	BID SET
CHECKED BY	Checker
DRAWN BY	F. PITORE

ORIENTATION PLAN

AS101

VOLUME 1

C:\Users\fernando\Documents_A_13024_Modli_2013_fernando.rvt
7/14/2014 12:42:45 PM

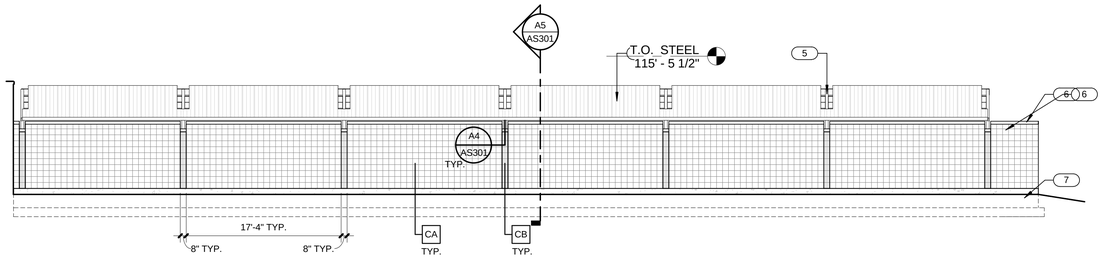

CAR PORT EAST WALL ELEVATION

D4 AS102
1/8" = 1'-0"

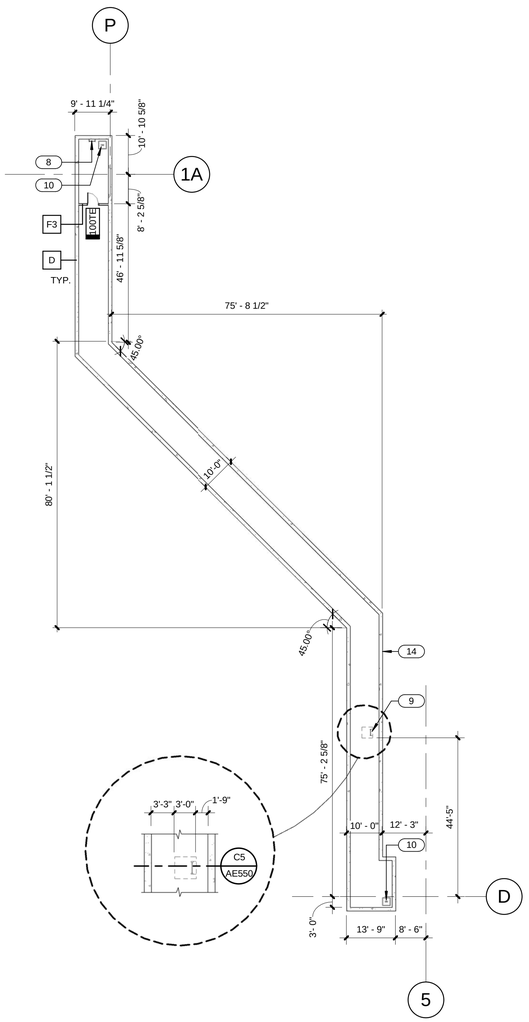

TUNNEL PLAN

A1 AS102
1" = 20'-0"

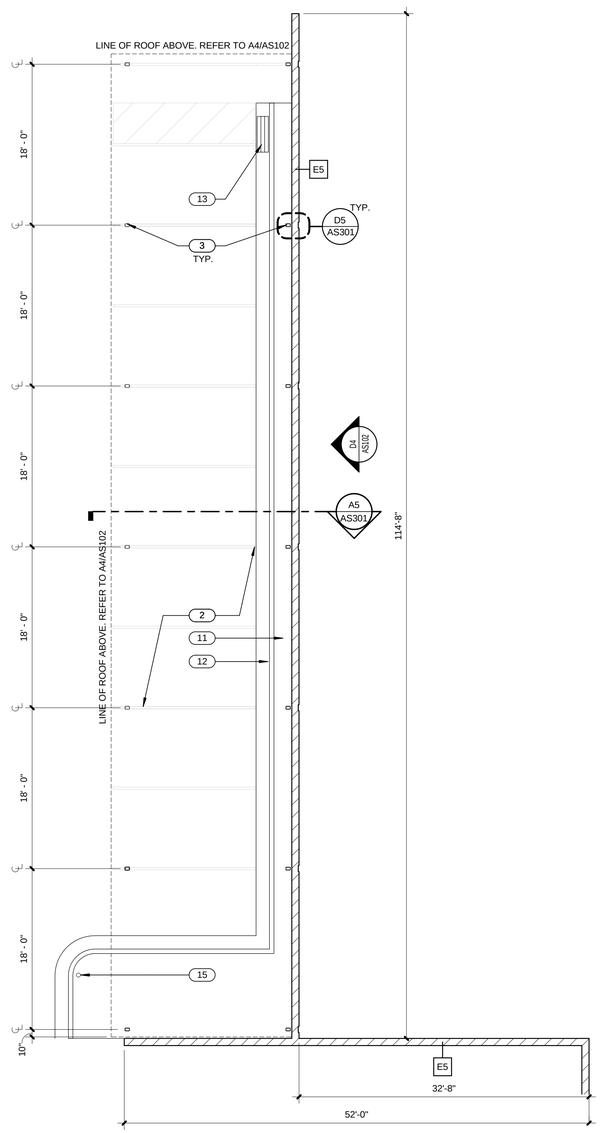

CARPORT PLAN

A3 AS102
1/8" = 1'-0"

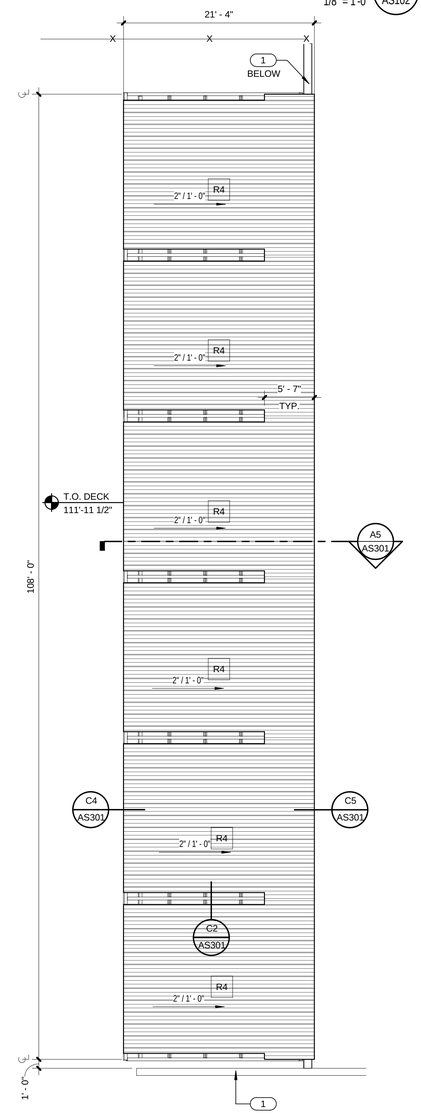

CARPORT ROOF PLAN

A4 AS102
1/8" = 1'-0"

GENERAL NOTES

- GENERAL CONTRACTOR SHALL FIELD VERIFY ALL CONDITIONS AND SHALL REPORT TO THE ARCHITECT ANY UNKNOWN CONDITIONS, ERRORS OR CONFLICTS IN THE DRAWINGS BEFORE BEGINNING WORK.
- DO NOT SCALE DRAWINGS.

CMU - A	CA	
CMU - B	CB	SET THIS PANEL 1" PROUD OF PANEL CA

KEYED NOTES

1. CMU WALL. SEE STRUCTURAL FOR REINFORCEMENT. SEE SPECS
2. 4" WIDE WHITE PAVEMENT MARKING @ 9'-0" O.C. REFER TO SPECS.
3. STEEL COLUMN. SEE STRUCTURAL. FIREPROOF PER SPEC.
4. ROOF ASSEMBLY. SEE ROOF TYPES.
5. STEEL BEAM. PAINT WHERE EXPOSED. SEE STRUCTURAL.
6. METAL CAP FLASHING.
7. REINFORCED CONCRETE FOUNDATION WALL. SEE STRUCTURAL.
8. ACCESS LADDER. SEE DETAIL B4/AE550
9. ESCAPE HATCH. SEE DETAIL C5/AE550.
10. 24"x24"x24" SUMP PIT. SEE DETAIL A4/AE550. COORDINATE WITH MECHANICAL DRAWINGS.
11. CONCRETE PAVING. SEE CIVIL DRAWINGS.
12. CURB AND GUTTER. SEE CIVIL DRAWINGS.
13. CATCH BASIN. SEE CIVIL DRAWINGS.
14. FLUID APPLIED WATER PROOFING WITH DRAINAGE MAT, TOP, SIDES, AND FOOTINGS
15. CARD READER PEDESTAL.

CRSA
649 E. South Temple
Salt Lake City, UT 84102
801.355.5915

MWL
11798 N. Lakeridge Pkwy.
Ashland, VA 23005
804-228-7473

State of Utah
Department of Administrative Services
Division of Facilities Construction & Management
4110 State Office Building
Salt Lake City, Utah 84114
Phone: (801) 538 - 3018
Fax: (801) 538 - 3267

DIVISION OF FACILITIES CONSTRUCTION AND MANAGEMENT
REVIEWED FOR CODE COMPLIANCE
SIGNATURE: Ernie Calle
DATE: 08-05-2014

STATE OF UTAH
#134096
MEHRDAD SAMIE
LICENSED ARCHITECT
04-28-2014
ARCHITECT-ENGINEER STAMP

Unified State Laboratory Module 2

4451 South 2700 West,
Taylorsville, UT 84118

DFCM #: 13020300
Project #: B13-024

DATE:	ISSUE TYPE:
APRIL 21, 2014	BID SET
CHECKED BY	Checker
DRAWN BY	F. PITORE

CARPORT & TUNNEL PLAN

AS102

VOLUME 1

C:\Users\fernando\Documents_A_13024_Model_2013_fernando.rvt
7/14/2014 12:42:58 PM

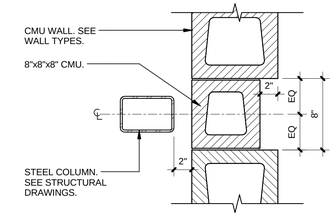

WALL DETAIL D5 / AS301
1 1/2" = 1'-0"

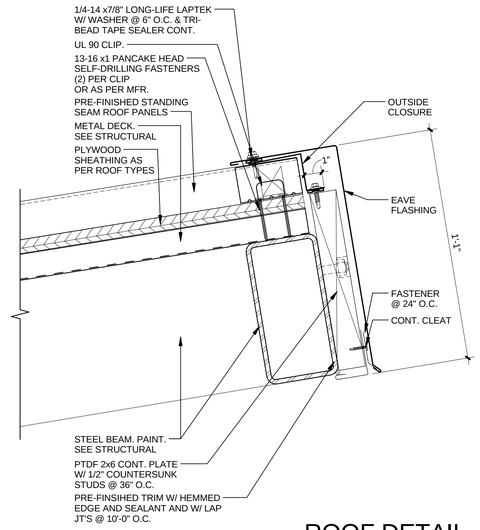

ROOF DETAIL C4 / AS301
3" = 1'-0"

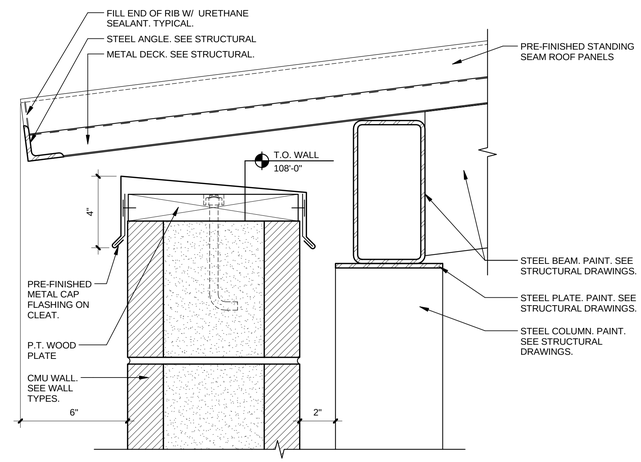

WALL DETAIL C5 / AS301
3" = 1'-0"

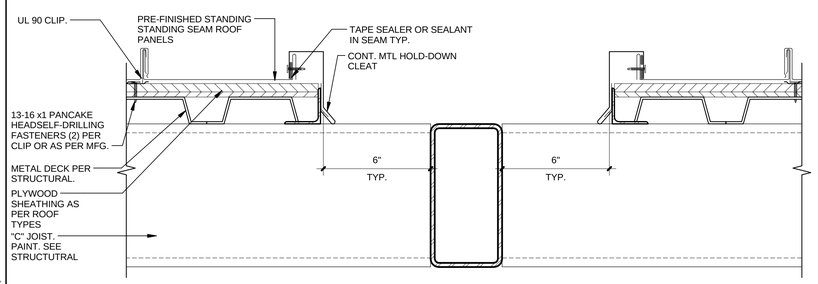

ROOF DETAIL C2 / AS301
3" = 1'-0"

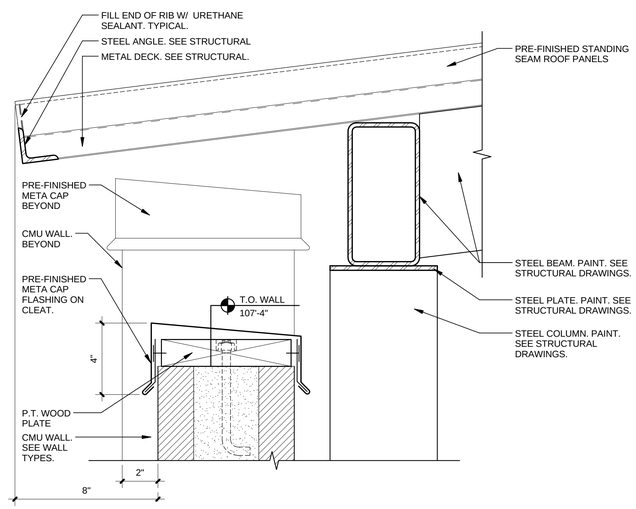

WALL DETAIL A4 / AS301
3" = 1'-0"

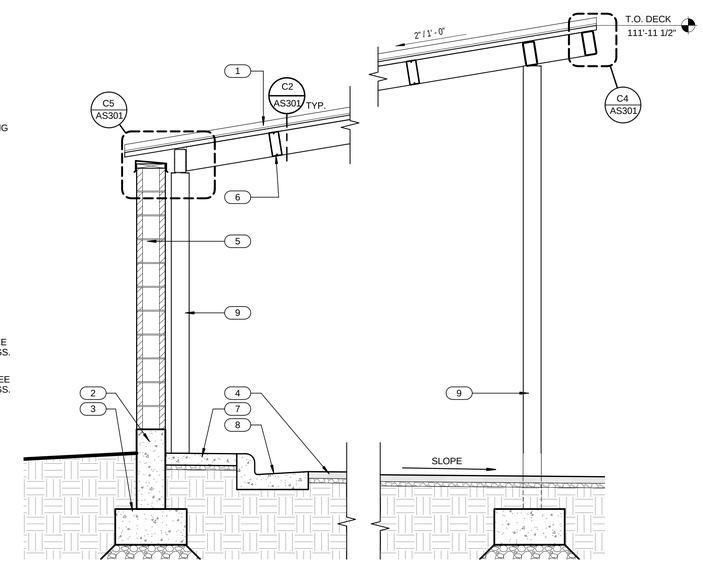

PARKING STALL SECTION A5 / AS301
1/2" = 1'-0"

CRSA
649 E. South Temple
Salt Lake City, UT 84102
801.355.5915

M1WL
11798 N. Lakeridge Pkwy.
Ashland, VA 23005
804-228-7473

State of Utah
Department of Administrative Services
Division of Facilities Construction & Management
4110 State Office Building
Salt Lake City, Utah 84114
Phone: (801) 538 - 3018
Fax: (801) 538 - 3267

DIVISION OF FACILITIES CONSTRUCTION AND MANAGEMENT
REVIEWED FOR CODE COMPLIANCE
SIGNATURE: Ernie Calle
DATE: 08-05-2014

STATE OF UTAH
#134096
MEHRDAD SAMIE
LICENSED ARCHITECT
04-28-2014
ARCHITECT-ENGINEER STAMP

Unified State Laboratory Module 2

4451 South 2700 West, Taylorsville, UT 84118

DFCM #: 13020300
Project #: B13-024

DATE:	ISSUE TYPE:
APRIL 21, 2014	BID SET
CHECKED BY	Checker
DRAWN BY	F. PITORE

DETAILS

AS301
VOLUME 1

C:\Users\fernando\Documents_A_13024_Modl_2013_fernando.rvt
7/14/2014 12:43:09 PM

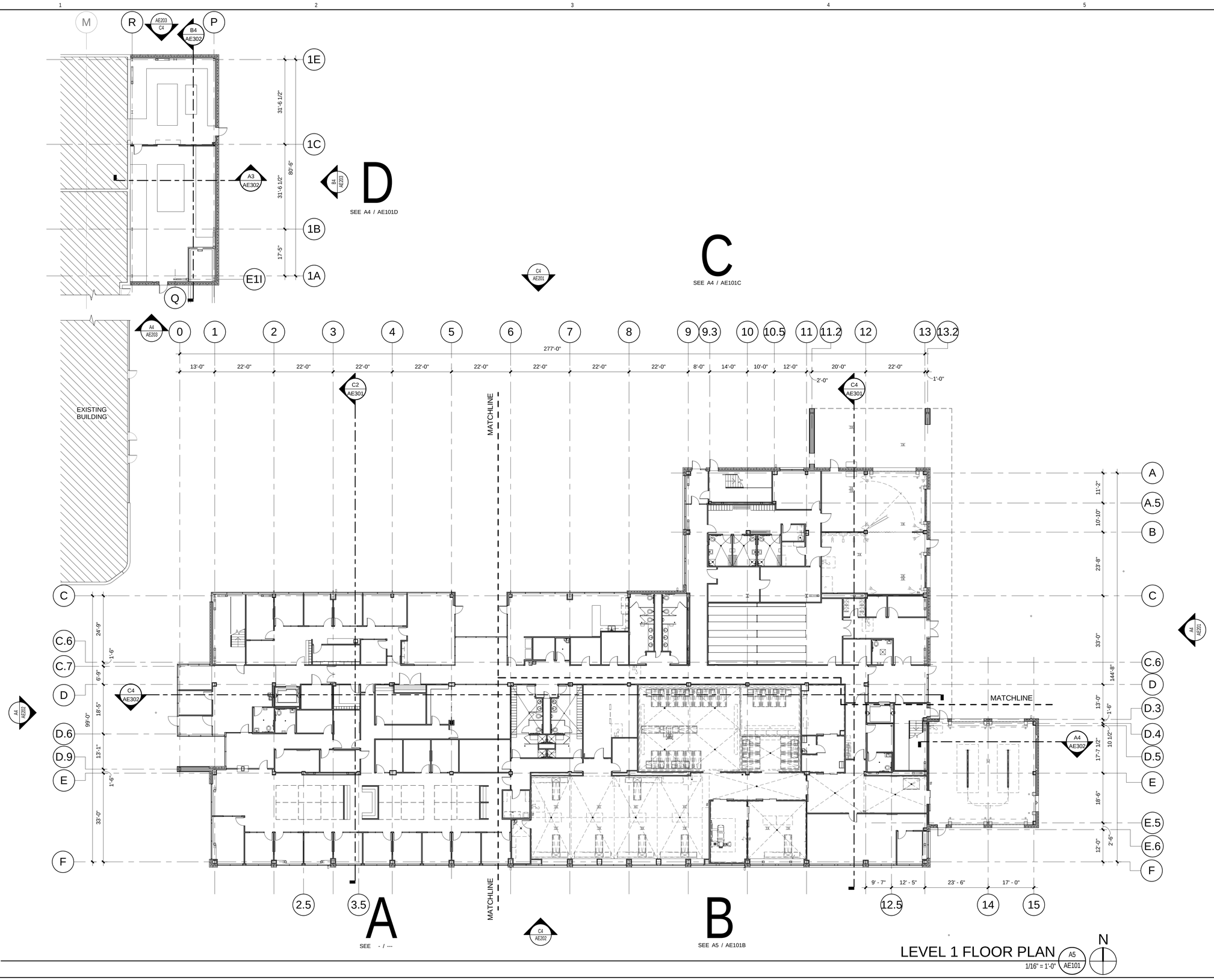

CRSA
649 E. South Temple
Salt Lake City, UT 84102
801.355.5915

MWL
11798 N. Lakeridge Pkwy.
Ashland, VA 23005
804-228-7473

State of Utah
Department of Administrative Services
Division of Facilities Construction & Management
4110 State Office Building
Salt Lake City, Utah 84114
Phone: (801) 538 - 3018
Fax: (801) 538 - 3267

DIVISION OF FACILITIES CONSTRUCTION AND MANAGEMENT
REVIEWED FOR CODE COMPLIANCE
SIGNATURE: Ernie Calle
DATE: 08-05-2014

STATE OF UTAH #134096 MEHRDAD SAMIE LICENSED ARCHITECT
04-28-2014
ARCHITECT-ENGINEER STAMP

Unified State Laboratory Module 2

4451 South 2700 West, Taylorsville, UT 84118

DFCM #: 13020300
Project #: B13-024

DATE:	ISSUE TYPE:
APRIL 21, 2014	BID SET
CHECKED BY	J. NIELSEN
DRAWN BY	F. PITORE

LEVEL 1 OVERALL PLAN

AE101

VOLUME 1

C:\Users\fernando\Documents_A_13024_Modli_2013_fernando.rvt
7/14/2014 12:19:15 PM

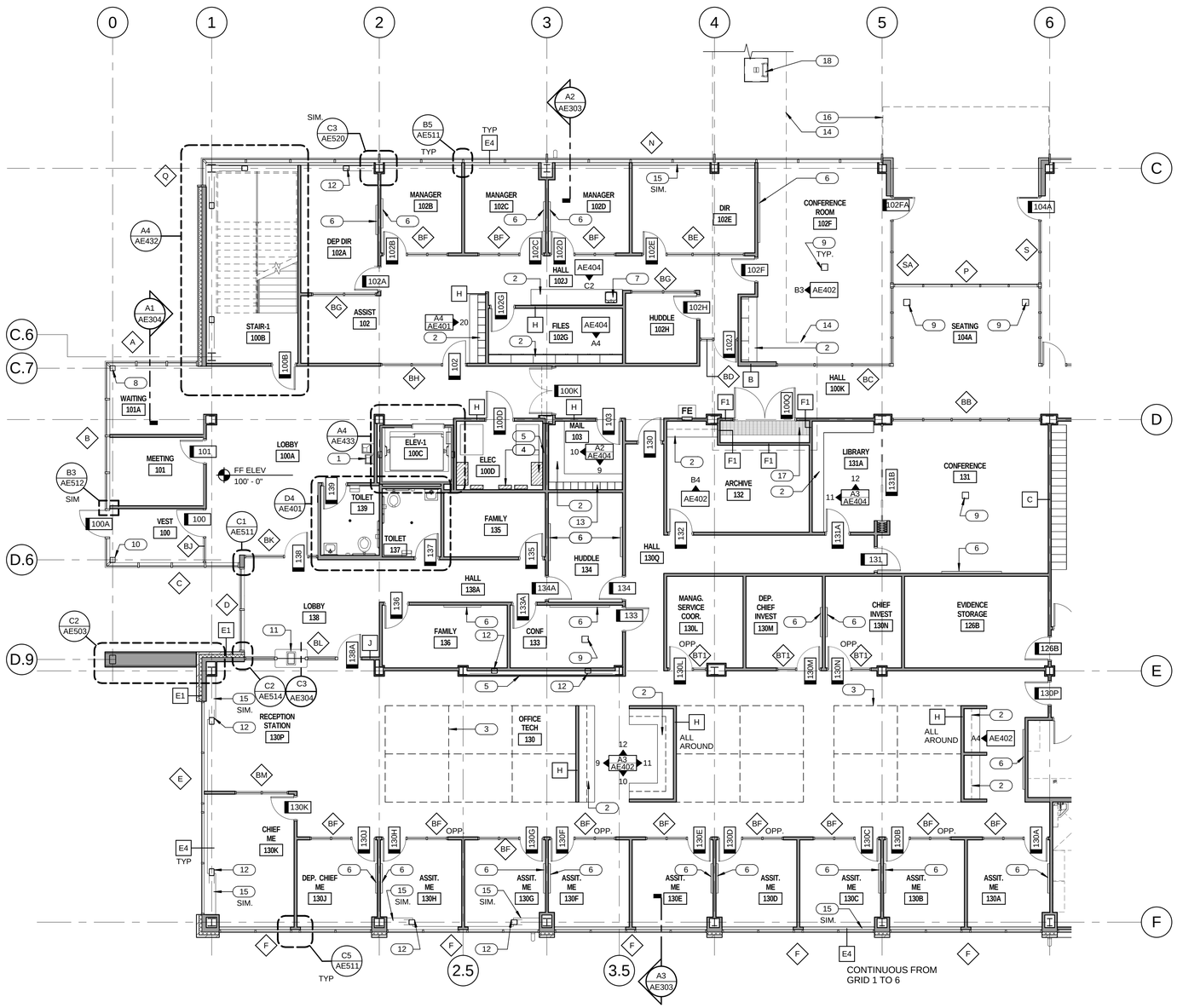

LEVEL 1 PLAN AREA A

1/8" = 1'-0"

GENERAL NOTES

- GENERAL CONTRACTOR SHALL FIELD VERIFY ALL CONDITIONS AND SHALL REPORT TO THE ARCHITECT ANY UNKNOWN CONDITIONS, ERRORS OR CONFLICTS IN THE DRAWINGS BEFORE BEGINNING WORK.
- DO NOT SCALE DRAWINGS.
- ITEMS SHOWN BY HIDDEN LINE ARE SPECIFIED BY OTHER SECTIONS.

ALL WALLS TO BE TYPE "A" U.N.O. ON PLAN — A

FIRE EXTINGUISHER — FE

KEYED NOTES

1. DRINKING FOUNTAIN. SEE PLUMBING DRAWINGS.
2. CASEWORK. SEE INTERIOR ELEVATIONS.
3. SPACE FOR CUBICLE.
4. ELECTRICAL PANEL. SEE ELECTRICAL DRAWINGS.
5. FURR WALL WITH WALL TYPE H. SEE FINISH PLANS FOR FINISH.
6. WHITEBOARD. SEE ACCESSORY SCHEDULE.
7. SINK. SEE PLUMBING DRAWINGS.
8. STEEL COLUMN. SEE STRUCTURAL. PAINT WHERE EXPOSED.
9. FLOOR BOX. SEE ELECTRICAL DRAWINGS.
10. STEEL COLUMN. SEE STRUCTURAL. FIREPROOF PER SPEC.
11. TRANSACTION COUNTER. SEE WINDOW TYPES.
12. BRACE FRAME. PAINT WHERE EXPOSED. SEE STRUCTURAL.
13. MAIL SLOTS. SEE INTERIOR ELEVATIONS.
14. TUNNEL BELOW.
15. WINDOW SIIL. SEE A3/AE405.
16. ROOF ABOVE.
17. STEEL GRATE. COORDINATE WITH MECHANICAL PIPING. SEE MECHANICAL DRAWINGS.
18. ESCAPE HATCH. SEE DETAIL C5/AE550.

KEY PLAN

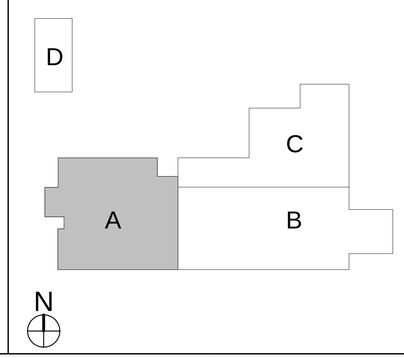

CRSA

649 E. South Temple
Salt Lake City, UT 84102
801.355.5915

MWL

11798 N. Lakeridge Pkwy.
Ashland, VA 23005
804-228-7473

State of Utah
Department of Administrative Services
Division of Facilities Construction & Management
4110 State Office Building
Salt Lake City, Utah 84114
Phone: (801) 538 - 3018
Fax: (801) 538 - 3267

DIVISION OF FACILITIES CONSTRUCTION AND MANAGEMENT
REVIEWED FOR CODE COMPLIANCE
SIGNATURE: Ernie Gelle
DATE: 08-05-2014

STATE OF UTAH #134096 MEHRDAD SAMIE LICENSED ARCHITECT
04.28.2014
ARCHITECT-ENGINEER STAMP

Unified State Laboratory Module 2

4451 South 2700 West, Taylorsville, UT 84118

DFCM #: 13020300

Project #: B13-024

DATE:	ISSUE TYPE:
APRIL 21, 2014	BID SET

CHECKED BY	J. NIELSEN
DRAWN BY	F. PITORE

LEVEL 1 PLAN AREA A

AE101A

VOLUME 1

C:\Users\fernando\Documents_A_13024_Modl_2013_fernando.rvt
7/14/2014 12:19:29 PM

LEVEL 1 DIMENSION PLAN AREA A

1/8" = 1'-0"

A4 AE101A.D

N

GENERAL NOTES

- GENERAL CONTRACTOR SHALL FIELD VERIFY ALL CONDITIONS AND SHALL REPORT TO THE ARCHITECT ANY UNKNOWN CONDITIONS, ERRORS OR CONFLICTS IN THE DRAWINGS BEFORE BEGINNING WORK.
- DO NOT SCALE DRAWINGS.

KEYED NOTES

1 COLUMN WRAP TYPE A. SEE C3/AE520
2 COLUMN WRAP TYPE B. SEE B4/AE520
3 COLUMN WRAP TYPE D. SEE A4/AE520
4 COLUMN WRAP TYPE C. SEE B5/AE520
5 COLUMN WRAP TYPE E. SEE A5/AE520

KEY PLAN

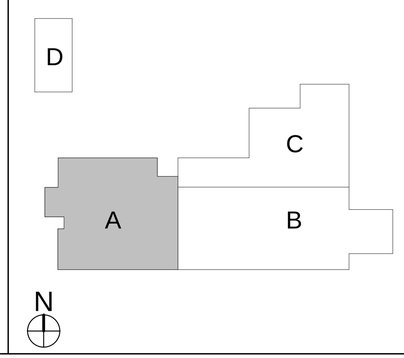

CRSA
649 E. South Temple
Salt Lake City, UT 84102
801.355.5915

MWL
11798 N. Lakeridge Pkwy.
Ashland, VA 23005
804-228-7473

State of Utah
Department of Administrative Services
Division of Facilities Construction & Management
4110 State Office Building
Salt Lake City, Utah 84114
Phone: (801) 538 - 3018
Fax: (801) 538 - 3267

DIVISION OF FACILITIES CONSTRUCTION AND MANAGEMENT
REVIEWED FOR CODE COMPLIANCE
SIGNATURE: Ernie Calle
DATE: 08-05-2014

STATE OF UTAH #134096 MEHRDAD SAMIE LICENSED ARCHITECT
04-28-2014
ARCHITECT-ENGINEER STAMP

Unified State Laboratory Module 2

4451 South 2700 West, Taylorsville, UT 84118

DFCM #: 13020300
Project #: B13-024

DATE:	ISSUE TYPE:
APRIL 21, 2014	BID SET

CHECKED BY: J. NIELSEN
DRAWN BY: F. PITORE

LEVEL 1 DIMENSION PLAN AREA A

AE101A.D

VOLUME 1

C:\Users\fernando\Documents_A_13024_Modli_2013_fernando.rvt
7/14/2014 12:19:38 PM

KEYED NOTES

1. MOP SINK. SEE PLUMBING DRAWINGS.
2. MOP RACK. SEE ACCESSORY SCHEDULE.
3. FLOOR DRAIN. SLOPE FLOOR TO DRAIN AS SHOWN. SEE PLUMBING DRAWINGS.
4. TRENCH DRAIN. SEE PLUMBING DRAWINGS.
5. FURR WALL WITH WALL TYPE H. SEE FINISH PLANS FOR FINISH.
6. BOLLARD. SEE DETAIL 16/C401.
7. SCRUB SINK. SEE PLUMBING DRAWINGS.
8. WINDOW SILL. SEE FINISH LEGEND.
9. STEEL COLUMN. SEE STRUCTURAL. PAINT WHERE EXPOSED.
10. BRACE FRAME. PAINT WHERE EXPOSED. SEE STRUCTURAL.
11. COLUMN WRAP. SIMILAR TO DETAIL A5/AE520
12. ELECTRICAL PANEL. SEE ELECTRICAL DRAWINGS.
13. FURR WALL WITH 1-1/2" METAL FRAMING.
14. WHITEBOARD. SEE ACCESSORY SCHEDULE.

GENERAL NOTES

- GENERAL CONTRACTOR SHALL FIELD VERIFY ALL CONDITIONS AND SHALL REPORT TO THE ARCHITECT ANY UNKNOWN CONDITIONS, ERRORS OR CONFLICTS IN THE DRAWINGS BEFORE BEGINNING WORK.
- DO NOT SCALE DRAWINGS.
- ITEMS SHOWN BY HIDDEN LINE ARE SPECIFIED BY OTHER SECTIONS.

ALL WALLS TO BE TYPE "A" U.N.O. ON PLAN — A

FIRE EXTINGUISHER — FE

KEY PLAN

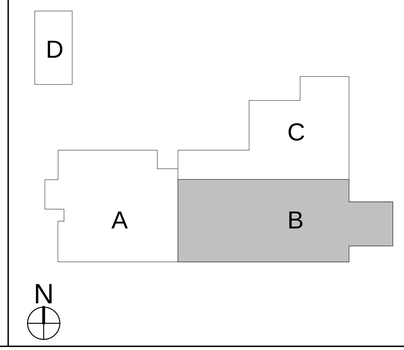

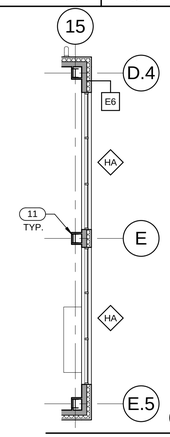

CLERESTORY PLAN (C5 / AE101B) 1/8" = 1'-0"

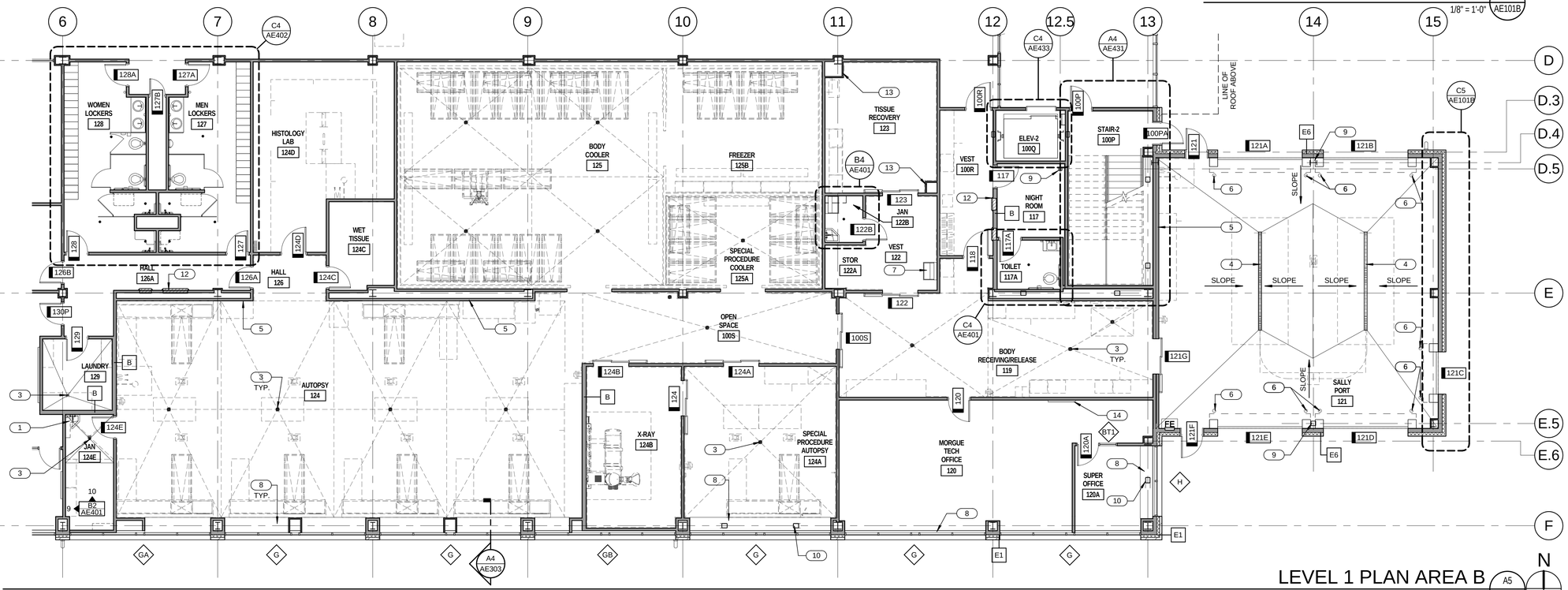

LEVEL 1 PLAN AREA B (A5 / AE101B) 1/8" = 1'-0"

CRSA
649 E. South Temple
Salt Lake City, UT 84102
801.355.5915

MWL
11798 N. Lakeridge Pkwy.
Ashland, VA 23005
804-228-7473

State of Utah
Department of Administrative Services
Division of Facilities Construction & Management
4110 State Office Building
Salt Lake City, Utah 84114
Phone: (801) 538 - 3018
Fax: (801) 538 - 3267

DIVISION OF FACILITIES CONSTRUCTION AND MANAGEMENT
REVIEWED FOR CODE COMPLIANCE
SIGNATURE: Ernie Ralph
DATE: 08-05-2014

STATE OF UTAH #134096 MEHRDAD SANIE LICENSED ARCHITECT
04.28.2014
ARCHITECT-ENGINEER STAMP

Unified State Laboratory Module 2

4451 South 2700 West, Taylorsville, UT 84118

DFCM #:	13020300
Project #:	B13-024
DATE:	ISSUE TYPE:
APRIL 21, 2014	BID SET
CHECKED BY	J. NIELSEN
DRAWN BY	F. PITORE

LEVEL 1 PLAN AREA B

AE101B

VOLUME 1

C:\Users\fernando\Documents_A_13024_Modl_2013_fernando.rvt
7/14/2014 12:19:54 PM

KEYED NOTES

1. COLUMN WRAP TYPE E. SEE A5/AE520
2. COLUMN WRAP TYPE C. SEE B5/AE520
3. FURR WITH 1-1/2" METAL FRAMING. PROVIDE DETAIL SIMILAR TO COLUMN WRAP TYPE B. COORDINATE WITH MECHANICAL.

GENERAL NOTES

- GENERAL CONTRACTOR SHALL FIELD VERIFY ALL CONDITIONS AND SHALL REPORT TO THE ARCHITECT ANY UNKNOWN CONDITIONS, ERRORS OR CONFLICTS IN THE DRAWINGS BEFORE BEGINNING WORK.
- DO NOT SCALE DRAWINGS.

KEY PLAN

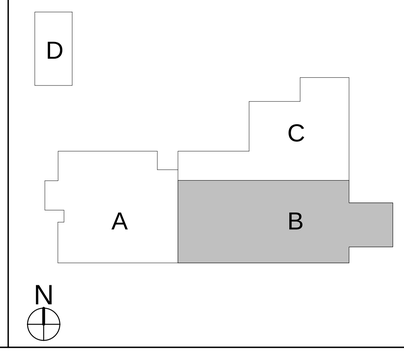

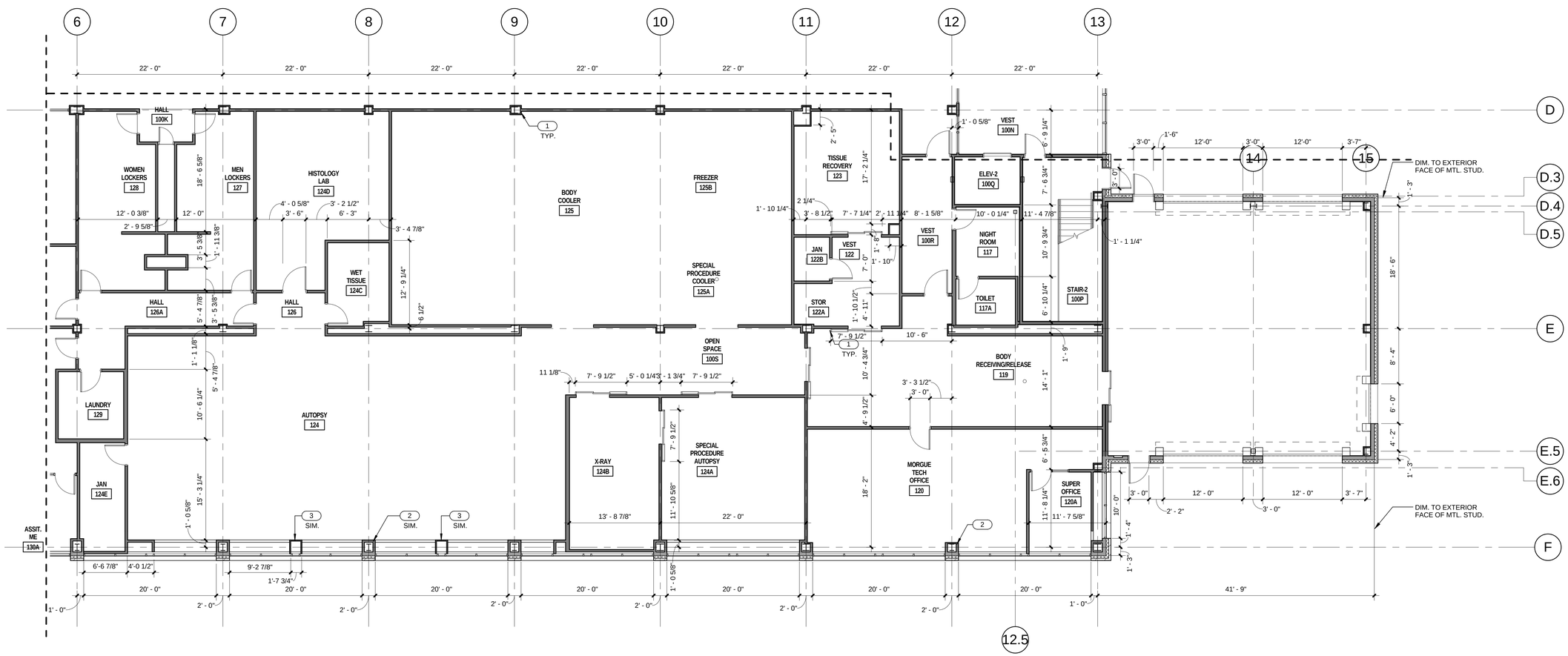

LEVEL 1 DIMENSION PLAN AREA B

1/8" = 1'-0"

CRSA
649 E. South Temple
Salt Lake City, UT 84102
801.355.5915

MWL
11798 N. Lakeridge Pkwy.
Ashland, VA 23005
804-228-7473

State of Utah
Department of Administrative Services
Division of Facilities Construction & Management
4110 State Office Building
Salt Lake City, Utah 84114
Phone: (801) 538 - 3018
Fax: (801) 538 - 3267

DIVISION OF FACILITIES CONSTRUCTION AND MANAGEMENT
REVIEWED FOR CODE COMPLIANCE
SIGNATURE: Ernie Gelfe
DATE: 08-05-2014

STATE OF UTAH #134096 MEHRDAD SAMII LICENSED ARCHITECT
04-28-2014
ARCHITECT-ENGINEER STAMP

Unified State Laboratory Module 2

4451 South 2700 West, Taylorsville, UT 84118

DFCM #: 13020300
Project #: B13-024

DATE:	ISSUE TYPE:
APRIL 21, 2014	BID SET

CHECKED BY: J. NIELSEN
DRAWN BY: F. PITORE

LEVEL 1 DIMENSION PLAN AREA B

AE101B.D

VOLUME 1

C:\Users\fernando\Documents_A_13024_Modli_2013_fernando.rvt
7/14/2014 12:20:03 PM

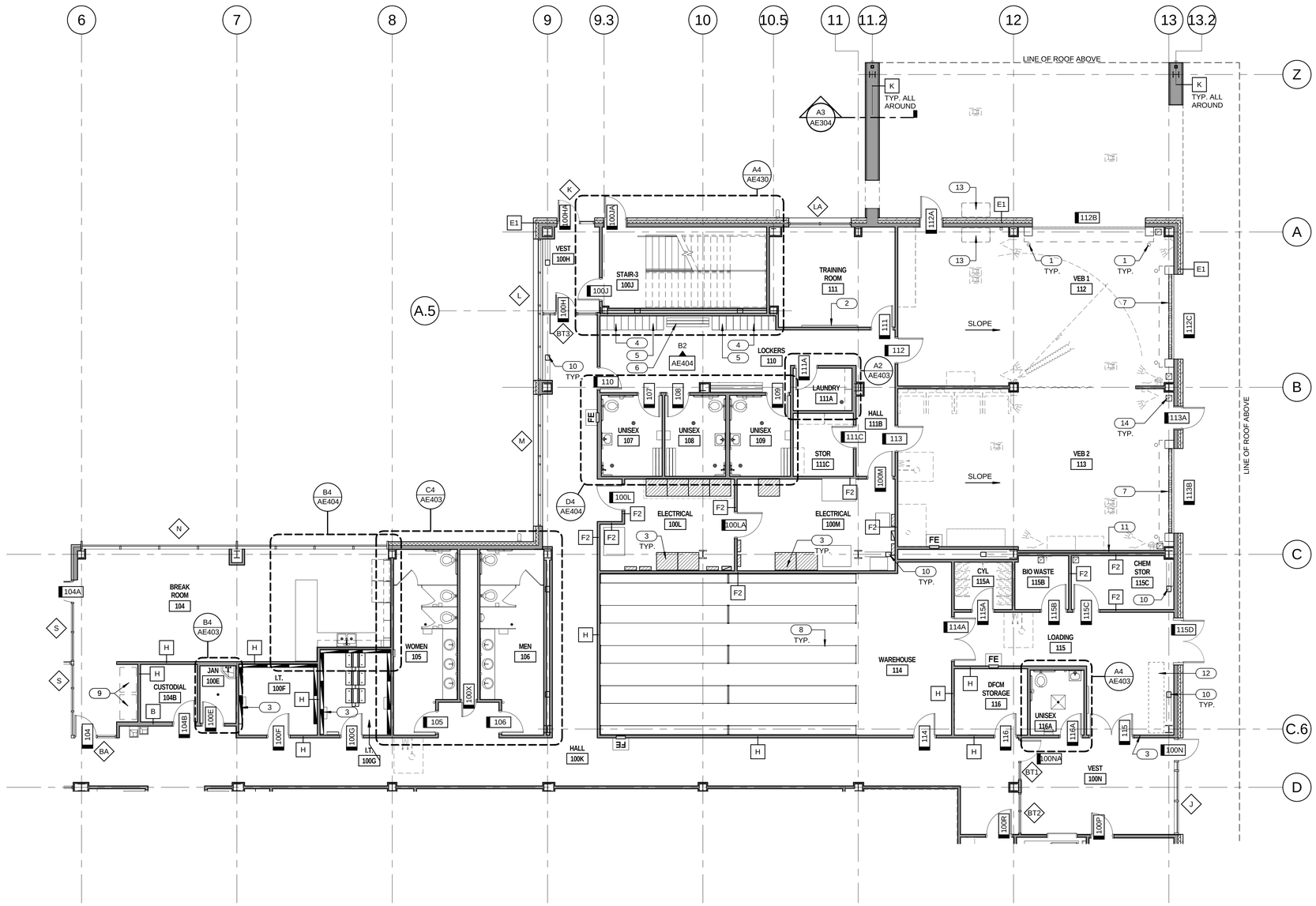

LEVEL 1 PLAN AREA C

1/8" = 1'-0"

GENERAL NOTES

- GENERAL CONTRACTOR SHALL FIELD VERIFY ALL CONDITIONS AND SHALL REPORT TO THE ARCHITECT ANY UNKNOWN CONDITIONS, ERRORS OR CONFLICTS IN THE DRAWINGS BEFORE BEGINNING WORK.
- DO NOT SCALE DRAWINGS.
- ITEMS SHOWN BY HIDDEN LINE ARE SPECIFIED BY OTHER SECTIONS.

ALL WALLS TO BE TYPE "A" U.N.O. ON PLAN — A

FIRE EXTINGUISHER — FE

KEYED NOTES

1. BOLLARD. SEE DETAIL 16/C401.
2. WHITEBOARD. SEE ACCESSORY SCHEDULE.
3. ELECTRICAL PANEL. SEE ELECTRICAL DRAWINGS.
4. LOCKERS. SEE ACCESSORY SCHEDULE
5. CUBBIES. SEE INTERIOR ELEVATIONS.
6. BENCH. SEE ACCESSORY SCHEDULE.
7. TRENCH DRAIN. SEE PLUMBING DRAWINGS.
8. STORAGE SHELVING. SEE SHELVING DETAILS.
9. VENDING MACHINES. PROVIDED BY OWNER.
10. BRACE FRAME. PAINT WHERE EXPOSED. SEE STRUCTURAL.
11. FURR WALL WITH WALL TYPE H. SEE FINISH PLANS FOR FINISH.
12. FIRE RISER. SEE PLUMBING DRAWINGS.
13. FOLD DOWN SURFACE. SEE IL DRAWINGS.
14. MECHANICAL DUCT. SEE MECHANICAL DRAWINGS.

KEY PLAN

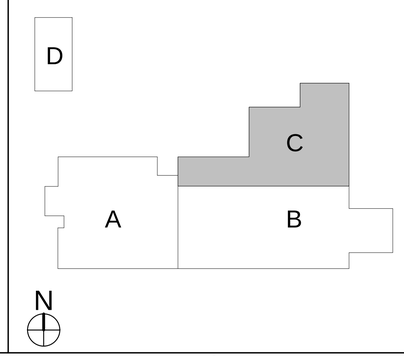

CRSA

649 E. South Temple
Salt Lake City, UT 84102
801.355.5915

MWL

11798 N. Lakeridge Pkwy.
Ashland, VA 23005
804-228-7473

State of Utah
Department of Administrative Services
Division of Facilities Construction & Management
4110 State Office Building
Salt Lake City, Utah 84114
Phone: (801) 538 - 3018
Fax: (801) 538 - 3267

DIVISION OF FACILITIES CONSTRUCTION AND MANAGEMENT
REVIEWED FOR CODE COMPLIANCE
SIGNATURE: Ernie Gelfe
DATE: 08-05-2014

STATE OF UTAH #134096 MEHRDAD SAMIE LICENSED ARCHITECT
04-28-2014
ARCHITECT-ENGINEER STAMP

Unified State Laboratory Module 2

4451 South 2700 West, Taylorsville, UT 84118

DFCM #: 13020300

Project #: B13-024

DATE:	ISSUE TYPE:
APRIL 21, 2014	BID SET

CHECKED BY: J. NIELSEN

DRAWN BY: F. PITORE

LEVEL 1 PLAN AREA C

AE101C

VOLUME 1

C:\Users\fernando\Documents_A_13024_Modli_2013_fernando.rvt
7/14/2014 12:20:15 PM

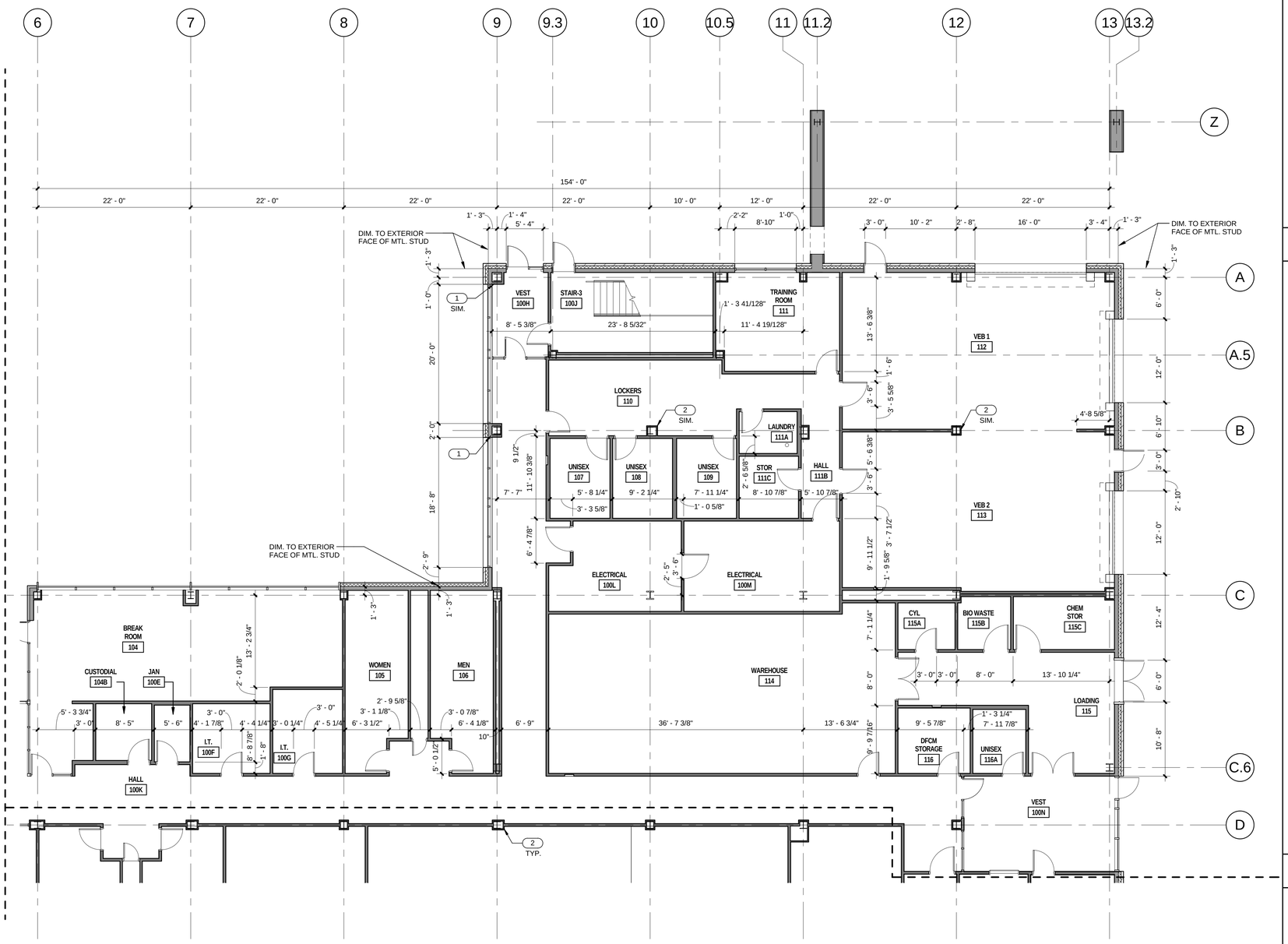

LEVEL 1 DIMENSION PLAN AREA C

1/8" = 1'-0" A4 AE101C.D

N

GENERAL NOTES

- GENERAL CONTRACTOR SHALL FIELD VERIFY ALL CONDITIONS AND SHALL REPORT TO THE ARCHITECT ANY UNKNOWN CONDITIONS, ERRORS OR CONFLICTS IN THE DRAWINGS BEFORE BEGINNING WORK.
- DO NOT SCALE DRAWINGS.

KEYED NOTES

1 COLUMN WRAP TYPE C. SEE B5/AE520
2 COLUMN WRAP TYPE E. SEE A5/AE520

KEY PLAN

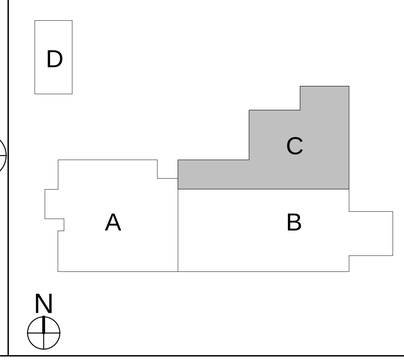

CRSA
649 E. South Temple
Salt Lake City, UT 84102
801.355.5915

MWL
11798 N. Lakeridge Pkwy.
Ashland, VA 23005
804-228-7473

State of Utah
Department of Administrative Services
Division of Facilities Construction & Management
4110 State Office Building
Salt Lake City, Utah 84114
Phone: (801) 538 - 3018
Fax: (801) 538 - 3267

DIVISION OF FACILITIES CONSTRUCTION AND MANAGEMENT
REVIEWED FOR CODE COMPLIANCE
SIGNATURE: Ernie Calle
DATE: 08-05-2014

STATE OF UTAH #134096 MEHRDAD SAMIE LICENSED ARCHITECT
04.28.2014
ARCHITECT-ENGINEER STAMP

Unified State Laboratory Module 2

4451 South 2700 West, Taylorsville, UT 84118

DFCM #: 13020300
Project #: B13-024

DATE:	ISSUE TYPE:
APRIL 21, 2014	BID SET
CHECKED BY	J. NIELSEN
DRAWN BY	F. PITORE

LEVEL 1 DIMENSION PLAN AREA C

AE101C.D

VOLUME 1

C:\Users\fernando\Documents_A_13024_Modli_2013_fernando.rvt
7/14/2014 12:20:27 PM

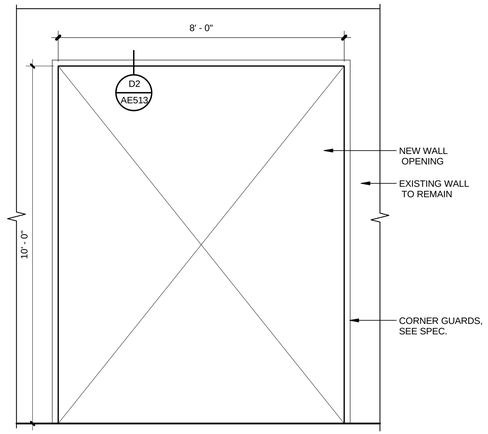

WALL OPENING D3 AE101D
1/2" = 1'-0"

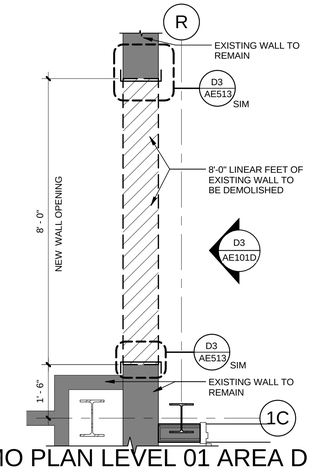

DEMO PLAN LEVEL 01 AREA D D4 AE101D
1/2" = 1'-0"

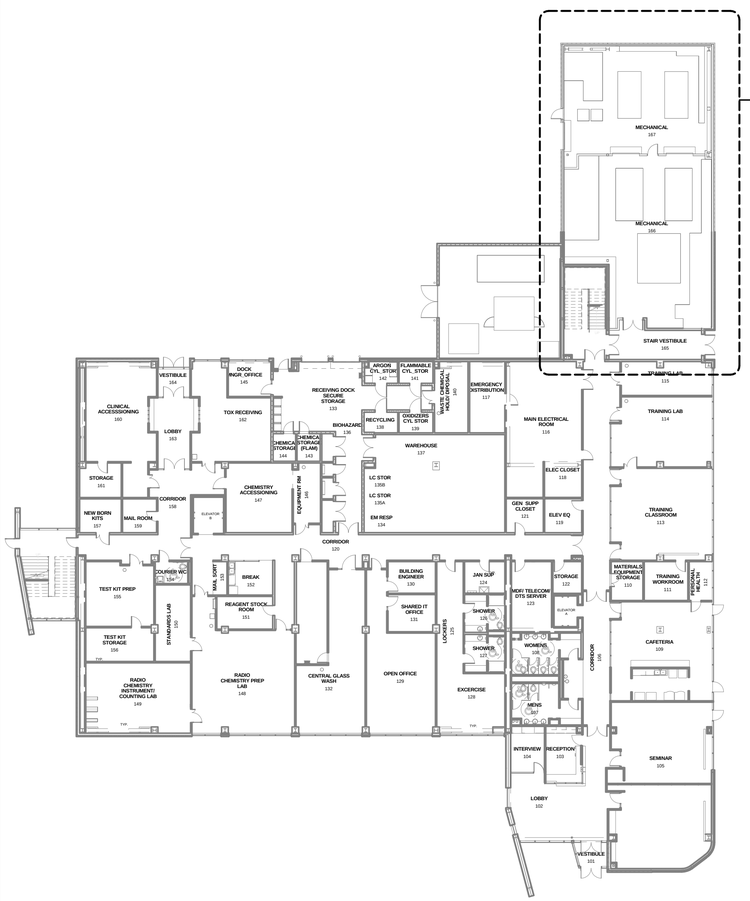

MODULE I LEVEL 01 REFERENCE PLAN 1 AE101D
3/64" = 1'-0"

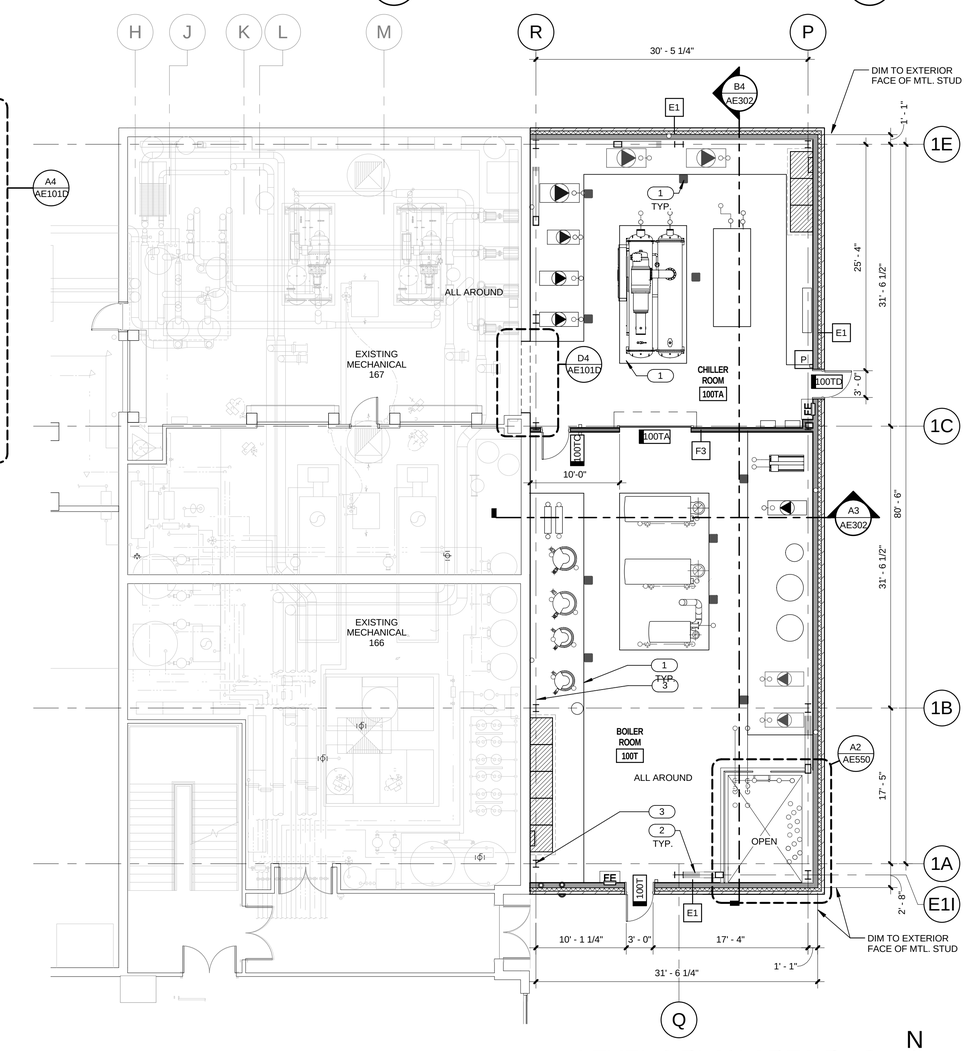

LEVEL 1 PLAN AREA D A4 AE101D
1/8" = 1'-0"

N

GENERAL NOTES

- GENERAL CONTRACTOR SHALL FIELD VERIFY ALL CONDITIONS AND SHALL REPORT TO THE ARCHITECT ANY UNKNOWN CONDITIONS, ERRORS OR CONFLICTS IN THE DRAWINGS BEFORE BEGINNING WORK.
- DO NOT SCALE DRAWINGS.
- ITEMS SHOWN BY HIDDEN LINE ARE SPECIFIED BY OTHER SECTIONS.

ALL WALLS TO BE TYPE "A" U.N.O. ON PLAN — A

FIRE EXTINGUISHER — FE

KEYED NOTES

1 6" CONCRETE HOUSEKEEPING PAD. COORDINATE SIZE & PLACEMENT WITH MECHANICAL EQUIPMENT. SEE FINISH SCHEDULE.
2 BRACE FRAME. PAINT WHERE EXPOSED. SEE STRUCTURAL.
3 STEEL COLUMN. SEE STRUCTURAL. FIREPROOF PER SPEC.

KEY PLAN

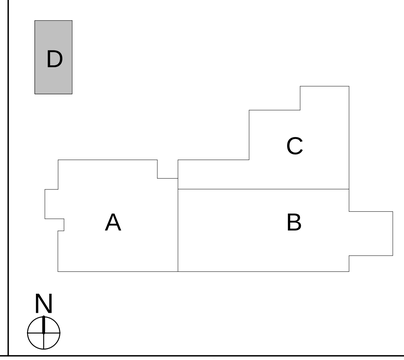

CRSA
649 E. South Temple
Salt Lake City, UT 84102
801.355.5915

MWL
11798 N. Lakeridge Pkwy.
Ashland, VA 23005
804-228-7473

State of Utah
Department of Administrative Services
Division of Facilities Construction & Management
4110 State Office Building
Salt Lake City, Utah 84114
Phone: (801) 538 - 3018
Fax: (801) 538 - 3267

DIVISION OF FACILITIES CONSTRUCTION AND MANAGEMENT
REVIEWED FOR CODE COMPLIANCE
SIGNATURE: Ernie Calle
DATE: 08-05-2014

STATE OF UTAH #134096 MEHRDAD SAMIE LICENSED ARCHITECT
04-28-2014
ARCHITECT-ENGINEER STAMP

Unified State Laboratory Module 2

4451 South 2700 West, Taylorsville, UT 84118

DFCM #:	13020300
Project #:	B13-024
DATE:	ISSUE TYPE:
APRIL 21, 2014	BID SET
CHECKED BY	J. NIELSEN
DRAWN BY	F. PITORE

LEVEL 1 PLAN AREA D

AE101D

VOLUME 1

C:\Users\fernando\Documents_A_13024_Modli_2013_fernando.rvt
7/14/2014 12:20:45 PM

LEVEL 2 FLOOR PLAN

1/16" = 1'-0"

A5 AE102

N

CRSA

649 E. South Temple
Salt Lake City, UT 84102
801.355.5915

MWL

11798 N. Lakeridge Pkwy.
Ashland, VA 23005
804-228-7473

State of Utah
Department of Administrative Services

Division of Facilities Construction & Management
4110 State Office Building
Salt Lake City, Utah 84114
Phone: (801) 538 - 3018
Fax: (801) 538 - 3267

DIVISION OF FACILITIES CONSTRUCTION AND MANAGEMENT
REVIEWED FOR CODE COMPLIANCE
SIGNATURE:
DATE: 08-05-2014

STATE OF UTAH #134096 MEHRDAD SAMIE LICENSED ARCHITECT
04-28-2014
ARCHITECT-ENGINEER STAMP

Unified State Laboratory Module 2

4451 South 2700 West, Taylorsville, UT 84118

DFCM #: 13020300

Project #: B13-024

DATE:	ISSUE TYPE:
APRIL 21, 2014	BID SET
CHECKED BY	J. NIELSEN
DRAWN BY	F. PITORE

LEVEL 2 OVERALL PLAN

AE102

VOLUME 1

C:\Users\fernando\Documents_A_13024_Modil_2013_fernando.rvt
7/14/2014 12:21:01 PM

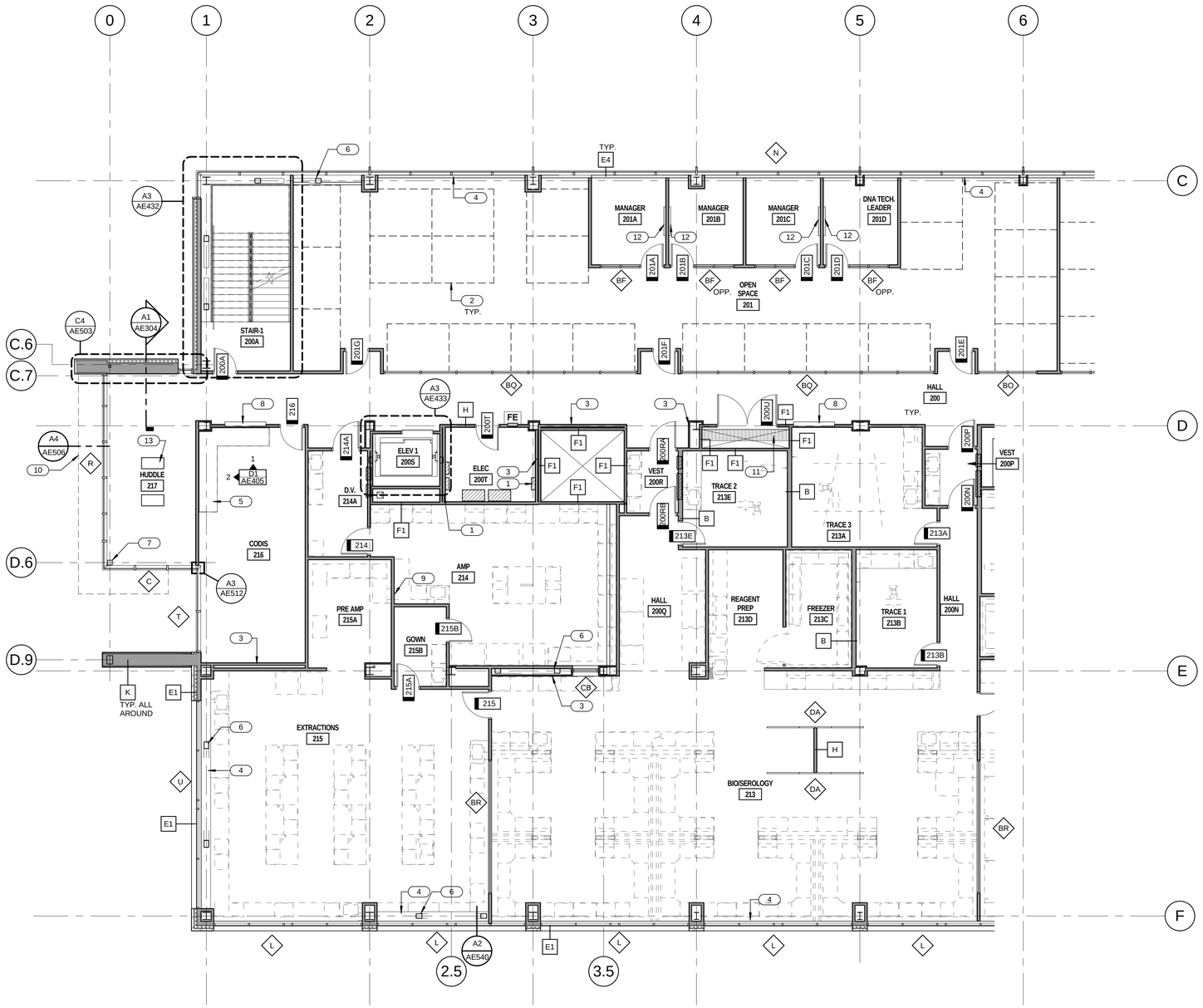

LEVEL 2 PLAN AREA A (A4 / AE102A)
1/8" = 1'-0"

GENERAL NOTES

- GENERAL CONTRACTOR SHALL FIELD VERIFY ALL CONDITIONS AND SHALL REPORT TO THE ARCHITECT ANY UNKNOWN CONDITIONS, ERRORS OR CONFLICTS IN THE DRAWINGS BEFORE BEGINNING WORK.
- DO NOT SCALE DRAWINGS.
- ITEMS SHOWN BY HIDDEN LINE ARE SPECIFIED BY OTHER SECTIONS.

ALL WALLS TO BE TYPE "A" U.N.O. ON PLAN — A

FIRE EXTINGUISHER — FE

KEYED NOTES

1 ELECTRICAL PANEL. SEE ELECTRICAL DRAWINGS.
2 SPACE FOR CUBICLE.
3 FURR WALL WITH WALL TYPE H. SEE FINISH PLANS FOR FINISH.
4 WINDOW SILL. SEE FINISH LEGEND.
5 CASEWORK. SEE INTERIOR ELEVATIONS.
6 BRACE FRAME. PAINT WHERE EXPOSED. SEE STRUCTURAL.
7 STEEL COLUMN. SEE STRUCTURAL. PAINT WHERE EXPOSED.
8 AV CABINET. SEE A2/AE541
9 PASS THROUGH CABINET. SEE SHEET IL104
10 ROOF BELOW. SEE ROOF PLANS
11 STEEL GRATE. COORDINATE WITH MECHANICAL PIPING. SEE MECHANICAL DRAWINGS.
12 WHITEBOARD. SEE ACCESSORY SCHEDULE.
13 FLOOR BOX. SEE ELECTRICAL DRAWINGS.

KEY PLAN

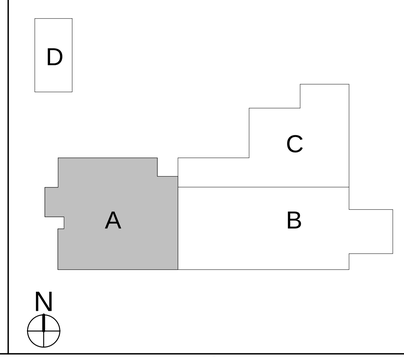

CRSA
649 E. South Temple
Salt Lake City, UT 84102
801.355.5915

MWL
11798 N. Lakeridge Pkwy.
Ashland, VA 23005
804-228-7473

State of Utah
Department of Administrative Services
Division of Facilities Construction & Management
4110 State Office Building
Salt Lake City, Utah 84114
Phone: (801) 538 - 3018
Fax: (801) 538 - 3267

DIVISION OF FACILITIES CONSTRUCTION AND MANAGEMENT
REVIEWED FOR CODE COMPLIANCE
SIGNATURE: Ernie Gelfe
DATE: 08-05-2014

STATE OF UTAH #134096 MEHRDAD SAMIE LICENSED ARCHITECT
04.28.2014
ARCHITECT-ENGINEER STAMP

Unified State Laboratory Module 2
4451 South 2700 West, Taylorsville, UT 84118

DFCM #: 13020300
Project #: B13-024

DATE:	ISSUE TYPE:
APRIL 21, 2014	BID SET

CHECKED BY: J. NIELSEN
DRAWN BY: F. PITORE

LEVEL 2 PLAN AREA A

AE102A
VOLUME 1

C:\Users\fernando\Documents_A_13024_Modil_2013_fernando.rvt
7/14/2014 12:21:12 PM

LEVEL 2 DIMENSION PLAN AREA A

1/8" = 1'-0"

A4 AE102A.D

N

GENERAL NOTES

- GENERAL CONTRACTOR SHALL FIELD VERIFY ALL CONDITIONS AND SHALL REPORT TO THE ARCHITECT ANY UNKNOWN CONDITIONS, ERRORS OR CONFLICTS IN THE DRAWINGS BEFORE BEGINNING WORK.
- DO NOT SCALE DRAWINGS.

KEYED NOTES

1 COLUMN WRAP TYPE A. SEE C3/AE520
2 COLUMN WRAP TYPE B. SEE B4/AE520
3 COLUMN WRAP TYPE D. SEE A4/AE520
4 COLUMN WRAP TYPE C. SEE B5/AE520
5 COLUMN WRAP TYPE E. SEE A5/AE520

KEY PLAN

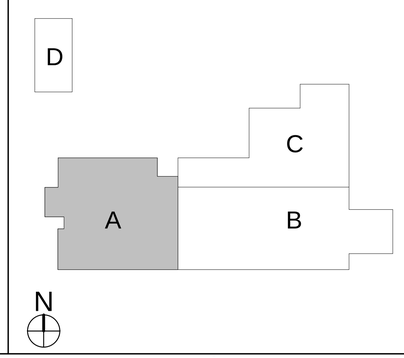

CRSA
649 E. South Temple
Salt Lake City, UT 84102
801.355.5915

MWL
11798 N. Lakeridge Pkwy.
Ashland, VA 23005
804-228-7473

State of Utah
Department of Administrative Services
Division of Facilities Construction & Management
4110 State Office Building
Salt Lake City, Utah 84114
Phone: (801) 538 - 3018
Fax: (801) 538 - 3267

DIVISION OF FACILITIES CONSTRUCTION AND MANAGEMENT
REVIEWED FOR CODE COMPLIANCE
SIGNATURE: Ernie Calfee
DATE: 08-05-2014

STATE OF UTAH #134096 MEHRDAD SAMIE LICENSED ARCHITECT
04.28.2014
ARCHITECT-ENGINEER STAMP

Unified State Laboratory Module 2

4451 South 2700 West, Taylorsville, UT 84118

DFCM #: 13020300
Project #: B13-024

DATE:	ISSUE TYPE:
APRIL 21, 2014	BID SET

CHECKED BY: J. NIELSEN
DRAWN BY: F. PITORE

LEVEL 2 DIMENSION PLAN AREA A

AE102A.D

VOLUME 1

C:\Users\fernando\Documents_A_13024_Modli_2013_fernando.rvt
7/14/2014 12:21:21 PM

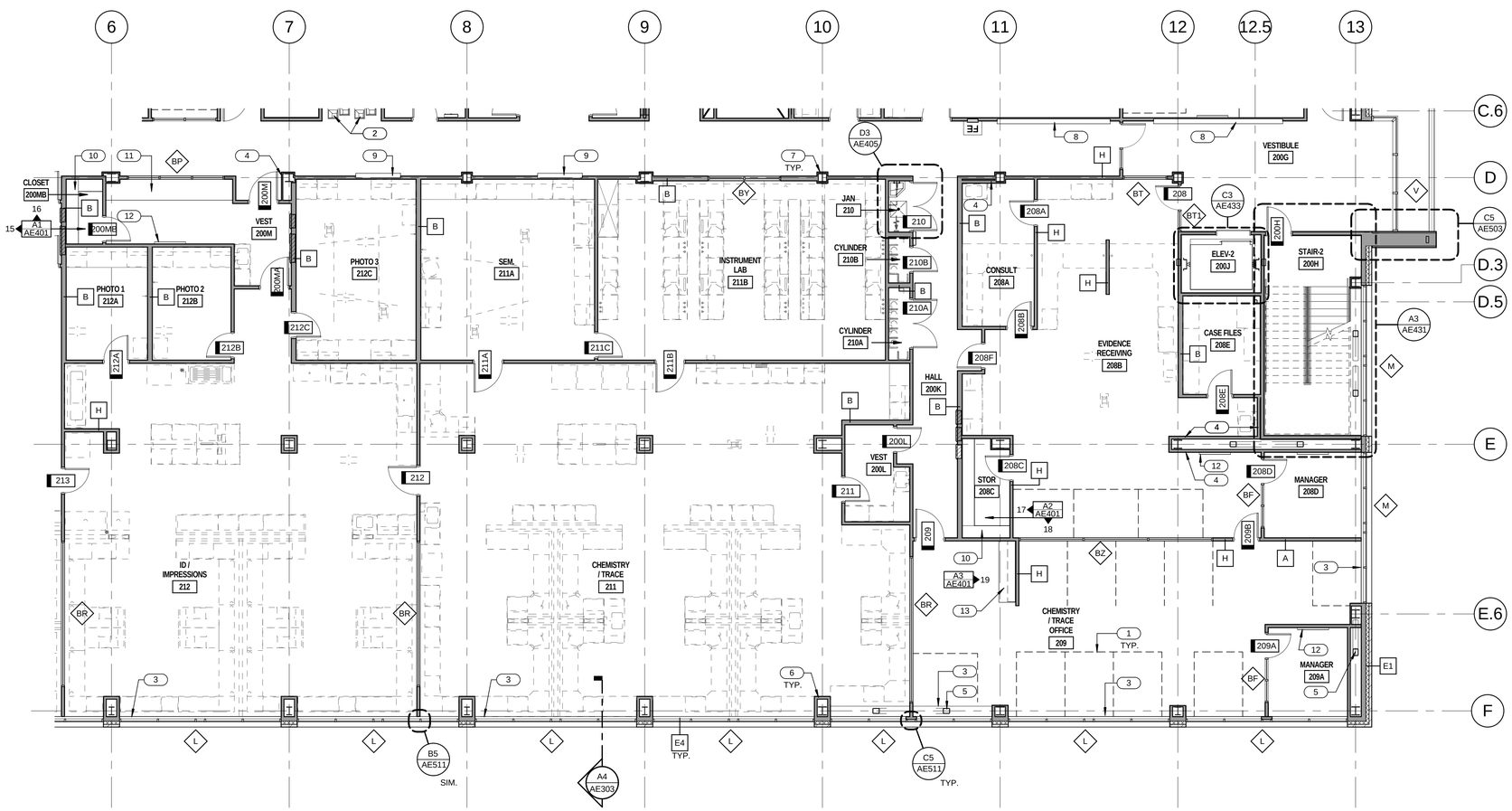

LEVEL 2 PLAN AREA B (A4 / AE102B)

1/8" = 1'-0"

N

GENERAL NOTES

- GENERAL CONTRACTOR SHALL FIELD VERIFY ALL CONDITIONS AND SHALL REPORT TO THE ARCHITECT ANY UNKNOWN CONDITIONS, ERRORS OR CONFLICTS IN THE DRAWINGS BEFORE BEGINNING WORK.
- DO NOT SCALE DRAWINGS.
- ITEMS SHOWN BY HIDDEN LINE ARE SPECIFIED BY OTHER SECTIONS.

ALL WALLS TO BE TYPE "A" U.N.O. ON PLAN — A

FIRE EXTINGUISHER — FE

KEYED NOTES

1 SPACE FOR CUBICLE.
2 DRINKING FOUNTAIN. SEE PLUMBING DRAWINGS.
3 WINDOW SILL. SEE FINISH LEGEND.
4 FURR WALL WITH WALL TYPE H. SEE FINISH PLANS FOR FINISH.
5 BRACE FRAME. PAINT WHERE EXPOSED. SEE STRUCTURAL.
6 COLUMN WRAP TYPE D. SEE A4/AE520
7 COLUMN WRAP TYPE E. SEE A5/AE520
8 DISPLAY CABINET. SEE A1/AE540
9 AV CABINET. SEE A2/AE541
10 ADJUSTABLE SHELVING. SEE A3/AE540.
11 COUNTERTOP WITH INTEGRAL 4" HIGH BACKSPLASH. SEE CASEWORK DETAILS.
12 WHITEBOARD. SEE ACCESSORY SCHEDULE.
13 COUNTERTOP. SEE INTERIOR ELEVATIONS.

KEY PLAN

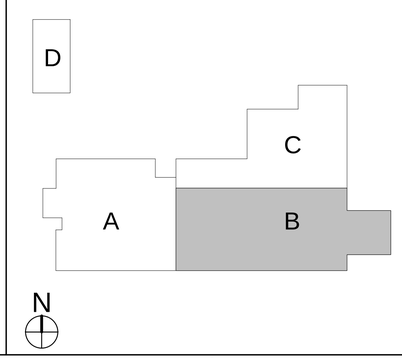

CRSA
649 E. South Temple
Salt Lake City, UT 84102
801.355.5915

MWL
11798 N. Lakeridge Pkwy.
Ashland, VA 23005
804-228-7473

State of Utah
Department of Administrative Services
Division of Facilities Construction & Management
4110 State Office Building
Salt Lake City, Utah 84114
Phone: (801) 538 - 3018
Fax: (801) 538 - 3267

DIVISION OF FACILITIES CONSTRUCTION AND MANAGEMENT
REVIEWED FOR CODE COMPLIANCE
SIGNATURE: Ernie Calle
DATE: 08-05-2014

STATE OF UTAH #134096 MEHRDAD SAMIE LICENSED ARCHITECT
04-28-2014
ARCHITECT-ENGINEER STAMP

Unified State Laboratory Module 2

4451 South 2700 West, Taylorsville, UT 84118

DFCM #: 13020300
Project #: B13-024

DATE:	ISSUE TYPE:
APRIL 21, 2014	BID SET

CHECKED BY: J. NIELSEN
DRAWN BY: F. PITORE

LEVEL 2 PLAN AREA B

AE102B

VOLUME 1

C:\Users\fernando\Documents_A_13024_Modil_2013_fernando.rvt
7/14/2014 12:21:31 PM

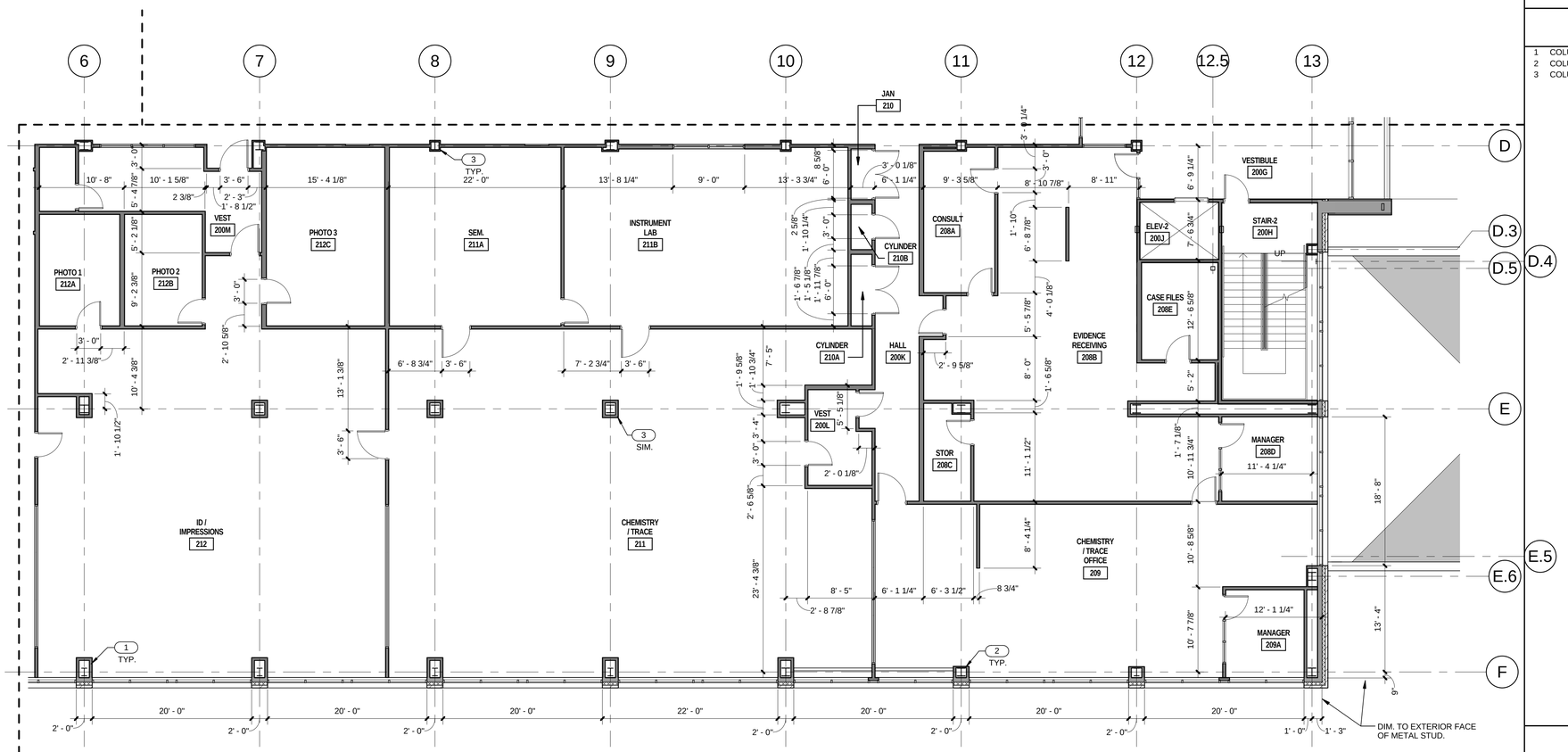

LEVEL 2 DIMENSION PLAN AREA B

1/8" = 1'-0" A4 AE102B.D

N

GENERAL NOTES

- GENERAL CONTRACTOR SHALL FIELD VERIFY ALL CONDITIONS AND SHALL REPORT TO THE ARCHITECT ANY UNKNOWN CONDITIONS, ERRORS OR CONFLICTS IN THE DRAWINGS BEFORE BEGINNING WORK.
- DO NOT SCALE DRAWINGS.

KEYED NOTES

1 COLUMN WRAP TYPE D. SEE A4/AE520
2 COLUMN WRAP TYPE C. SEE B5/AE520
3 COLUMN WRAP TYPE E. SEE A5/AE520

KEY PLAN

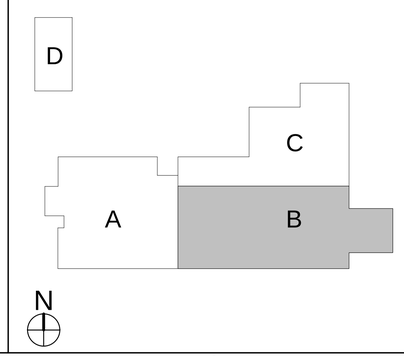

CRSA
649 E. South Temple
Salt Lake City, UT 84102
801.355.5915

MWL
11798 N. Lakeridge Pkwy.
Ashland, VA 23005
804-228-7473

State of Utah
Department of Administrative Services
Division of Facilities Construction & Management
4110 State Office Building
Salt Lake City, Utah 84114
Phone: (801) 538 - 3018
Fax: (801) 538 - 3267

DIVISION OF FACILITIES CONSTRUCTION AND MANAGEMENT
REVIEWED FOR CODE COMPLIANCE
SIGNATURE: Ernie Gelb
DATE: 08-05-2014

STATE OF UTAH
#134096
MEHRDAD SAMIE
LICENSED ARCHITECT
04.28.2014
ARCHITECT-ENGINEER STAMP

Unified State Laboratory Module 2

4451 South 2700 West, Taylorsville, UT 84118

DFCM #:	13020300
Project #:	B13-024

DATE:	ISSUE TYPE:
APRIL 21, 2014	BID SET
CHECKED BY	J. NIELSEN
DRAWN BY	F. PITORE

LEVEL 2 DIMENSION PLAN AREA B

AE102B.D

VOLUME 1

C:\Users\femando\Documents_A_13024_Modli_2013_femando.rvt
7/14/2014 12:21:41 PM

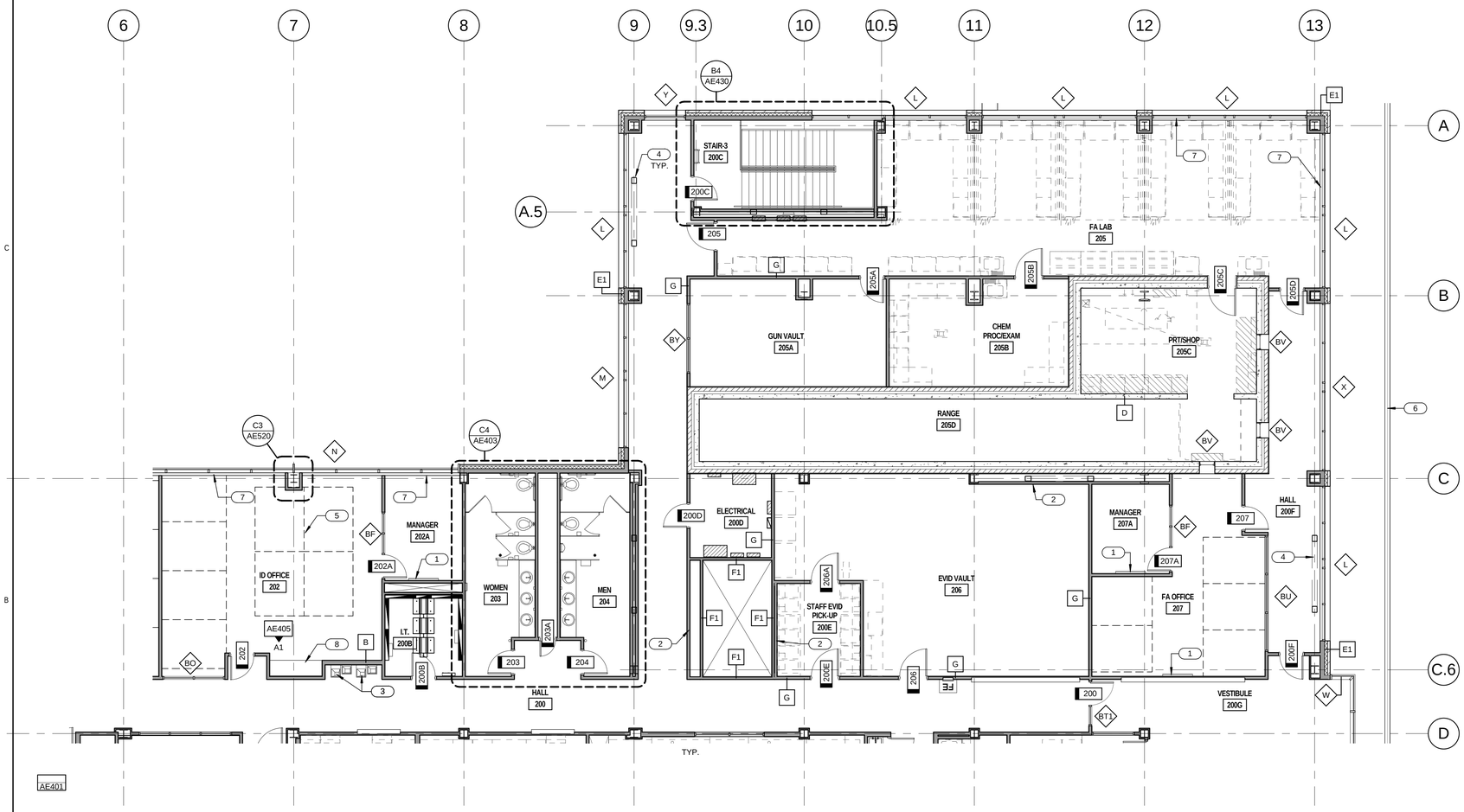

LEVEL 2 PLAN AREA C (A4 / AE102C)

1/8" = 1'-0"

N

GENERAL NOTES

- GENERAL CONTRACTOR SHALL FIELD VERIFY ALL CONDITIONS AND SHALL REPORT TO THE ARCHITECT ANY UNKNOWN CONDITIONS, ERRORS OR CONFLICTS IN THE DRAWINGS BEFORE BEGINNING WORK.
- DO NOT SCALE DRAWINGS.
- ITEMS SHOWN BY HIDDEN LINE ARE SPECIFIED BY OTHER SECTIONS.

ALL WALLS TO BE TYPE "A" U.N.O. ON PLAN — A

FIRE EXTINGUISHER — FE

KEYED NOTES

1. WHITEBOARD. SEE ACCESSORY SCHEDULE.
2. FURR WALL WITH WALL TYPE H. SEE FINISH PLANS FOR FINISH.
3. DRINKING FOUNTAIN. SEE PLUMBING DRAWINGS.
4. BRACE FRAME. PAINT WHERE EXPOSED. SEE STRUCTURAL.
5. SPACE FOR CUBICLE.
6. INTEGRAL GUTTER BELOW. SEE ROOF PLANS.
7. WINDOW SILL. SEE FINISH LEGEND.
8. COUNTERTOP. SEE INTERIOR ELEVATIONS.

KEY PLAN

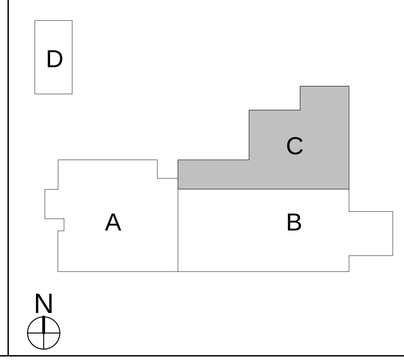

CRSA

649 E. South Temple
Salt Lake City, UT 84102
801.355.5915

MWL

11798 N. Lakeridge Pkwy.
Ashland, VA 23005
804-228-7473

State of Utah
Department of Administrative Services
Division of Facilities Construction & Management
4110 State Office Building
Salt Lake City, Utah 84114
Phone: (801) 538 - 3018
Fax: (801) 538 - 3267

DIVISION OF FACILITIES CONSTRUCTION AND MANAGEMENT
REVIEWED FOR CODE COMPLIANCE
SIGNATURE: Ernie Gelfe
DATE: 08-05-2014

STATE OF UTAH #134096 MEHRDAD SAMIE LICENSED ARCHITECT
04.28.2014
ARCHITECT-ENGINEER STAMP

Unified State Laboratory Module 2

4451 South 2700 West, Taylorsville, UT 84118

DFCM #: 13020300
Project #: B13-024

DATE:	ISSUE TYPE:
APRIL 21, 2014	BID SET

CHECKED BY: J. NIELSEN
DRAWN BY: F. PITORE

LEVEL 2 PLAN AREA C

AE102C

VOLUME 1

C:\Users\fernando\Documents_A_13024_Modli_2013_fernando.rvt
7/14/2014 12:21:50 PM

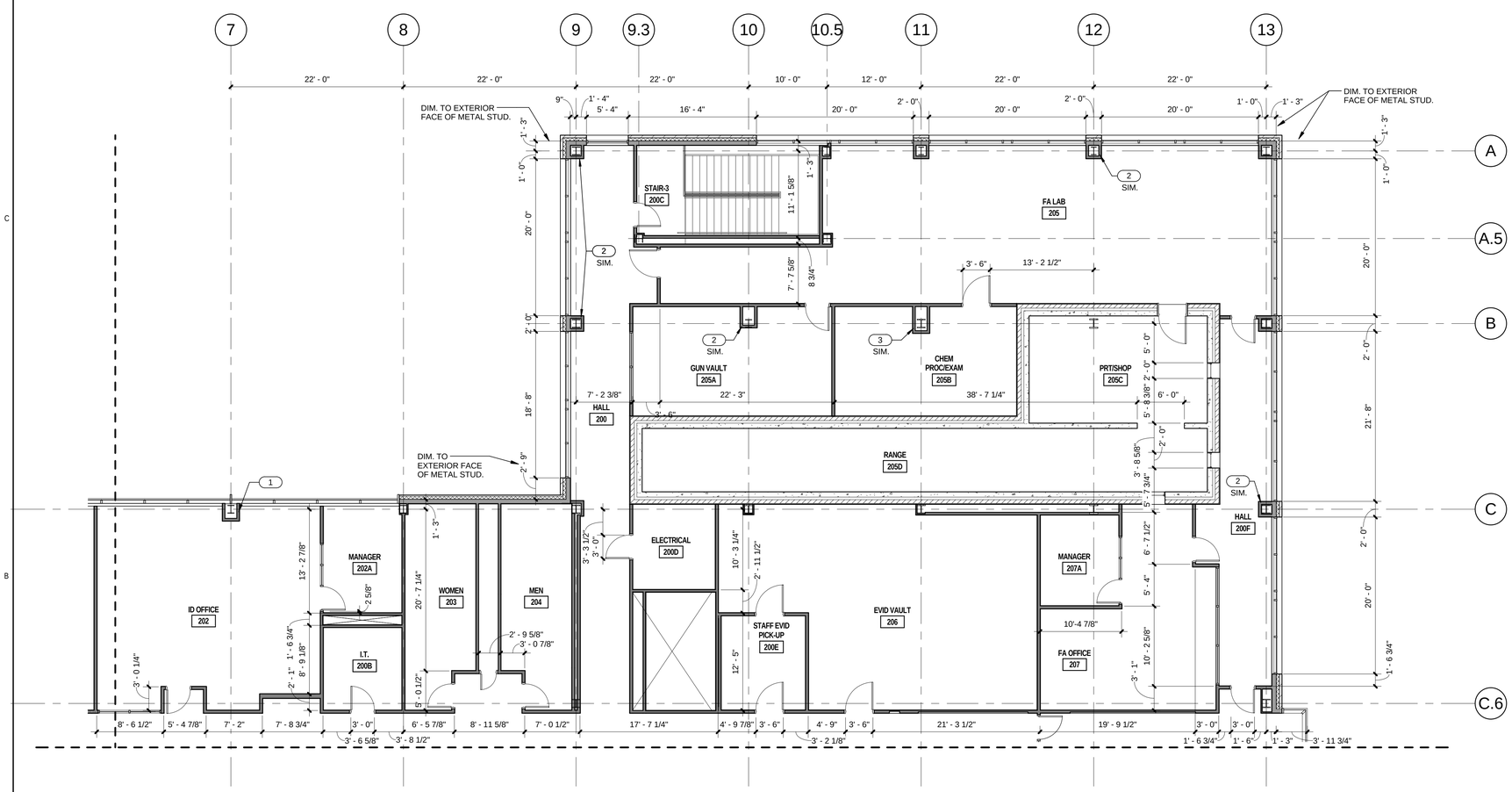

LEVEL 2 DIMENSION PLAN AREA C

1/8" = 1'-0"

A4 AE102C.D

N

GENERAL NOTES

- GENERAL CONTRACTOR SHALL FIELD VERIFY ALL CONDITIONS AND SHALL REPORT TO THE ARCHITECT ANY UNKNOWN CONDITIONS, ERRORS OR CONFLICTS IN THE DRAWINGS BEFORE BEGINNING WORK.
- DO NOT SCALE DRAWINGS.

KEYED NOTES

1 COLUMN WRAP TYPE D. SEE A4/AE520
2 COLUMN WRAP TYPE C. SEE B5/AE520
3 COLUMN WRAP TYPE E. SEE A5/AE520

KEY PLAN

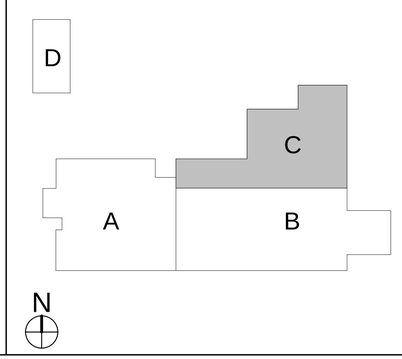

CRSA
649 E. South Temple
Salt Lake City, UT 84102
801.355.5915

MWL
11798 N. Lakeridge Pkwy.
Ashland, VA 23005
804-228-7473

State of Utah
Department of Administrative Services
Division of Facilities Construction & Management
DFCM
4110 State Office Building
Salt Lake City, Utah 84114
Phone: (801) 538 - 3018
Fax: (801) 538 - 3267

DIVISION OF FACILITIES CONSTRUCTION AND MANAGEMENT
REVIEWED FOR CODE COMPLIANCE
SIGNATURE: Ernie Calfe
DATE: 08-05-2014

STATE OF UTAH #134096 MEHRDAD SAMIE LICENSED ARCHITECT
04-28-2014
ARCHITECT-ENGINEER STAMP

Unified State Laboratory Module 2

4451 South 2700 West, Taylorsville, UT 84118

DFCM #: 13020300
Project #: B13-024

DATE:	ISSUE TYPE:
APRIL 21, 2014	BID SET

CHECKED BY	Checker
DRAWN BY	F. PITORE

LEVEL 2 DIMENSION PLAN AREA C

AE102C.D

VOLUME 1

C:\Users\fernando\Documents_A_13024_Modil_2013_fernando.rvt
7/14/2014 12:21:59 PM

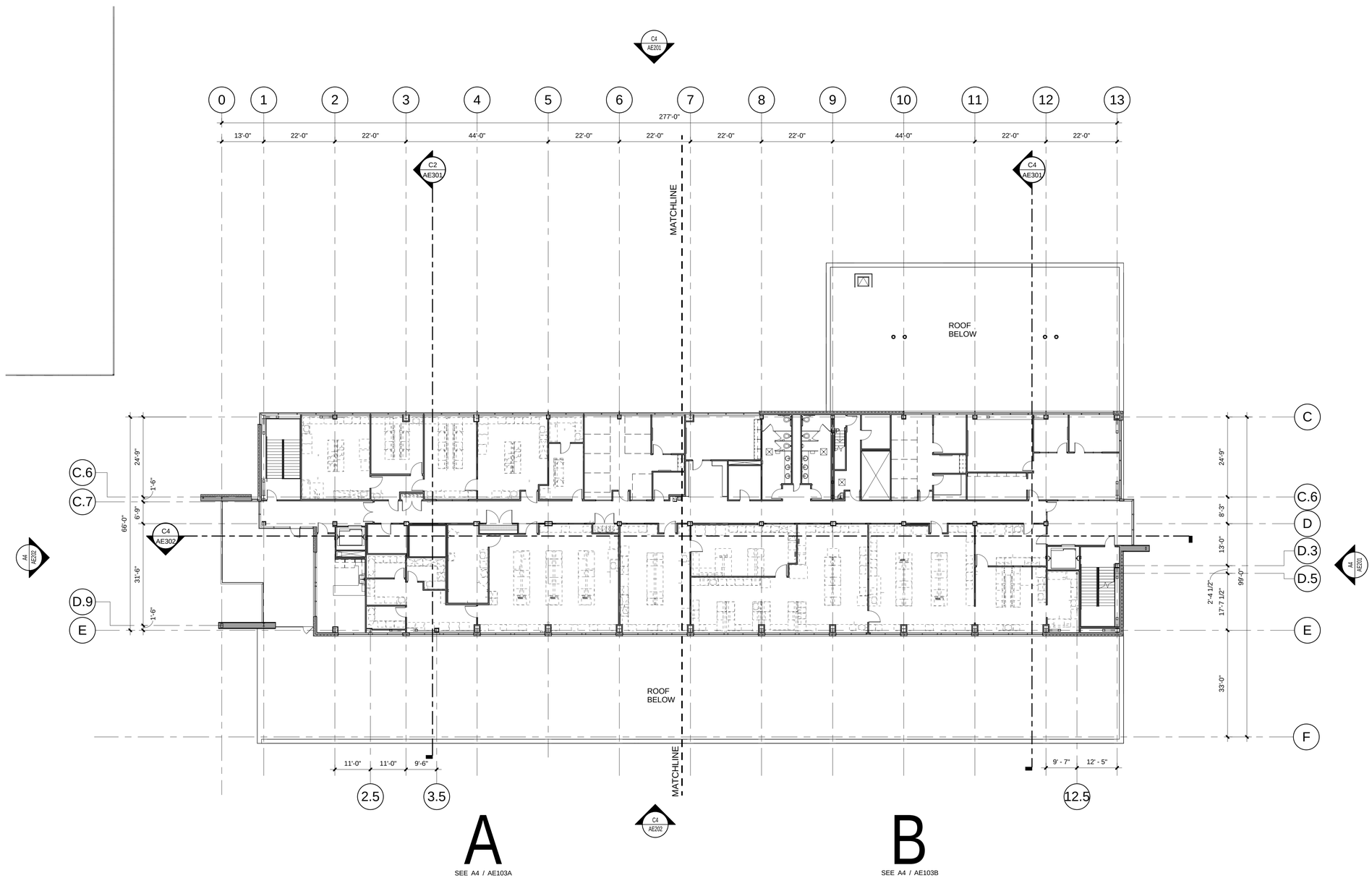

LEVEL 3 FLOOR PLAN

1/16" = 1'-0"

A5
AE103

N

CRSA

649 E. South Temple
Salt Lake City, UT 84102
801.355.5915

MWL

11798 N. Lakeridge Pkwy.
Ashland, VA 23005
804-228-7473

State of Utah
Department of Administrative Services

Division of Facilities
Construction & Management
4110 State Office Building
Salt Lake City, Utah 84114
Phone: (801) 538 - 3018
Fax: (801) 538 - 3267

DIVISION OF FACILITIES CONSTRUCTION AND MANAGEMENT
REVIEWED FOR CODE COMPLIANCE
SIGNATURE:
DATE: 08-05-2014

STATE OF UTAH
#134096
MEHRDAD SAMIE
LICENSED ARCHITECT

04-28-2014

ARCHITECT-ENGINEER STAMP

Unified State Laboratory Module 2

4451 South 2700 West,
Taylorsville, UT 84118

DFCM #:	13020300
Project #:	B13-024
DATE:	ISSUE TYPE:
APRIL 21, 2014	BID SET
CHECKED BY	J. NIELSEN
DRAWN BY	F. PITORE

LEVEL 3 OVERALL PLAN

AE103

VOLUME 1

C:\Users\fernando\Documents_A_13024_Modil_2013_fernando.rvt
7/14/2014 12:22:12 PM

LEVEL 3 PLAN AREA A

1/8" = 1'-0"

GENERAL NOTES

- GENERAL CONTRACTOR SHALL FIELD VERIFY ALL CONDITIONS AND SHALL REPORT TO THE ARCHITECT ANY UNKNOWN CONDITIONS, ERRORS OR CONFLICTS IN THE DRAWINGS BEFORE BEGINNING WORK.
- DO NOT SCALE DRAWINGS.
- ITEMS SHOWN BY HIDDEN LINE ARE SPECIFIED BY OTHER SECTIONS.

ALL WALLS TO BE TYPE "A" U.N.O. ON PLAN — A

FIRE EXTINGUISHER — FE

KEYED NOTES

1. DRINKING FOUNTAIN. SEE PLUMBING DRAWINGS.
2. GUARDRAIL.
3. ELECTRICAL PANEL. SEE ELECTRICAL DRAWINGS.
4. FURR WALL WITH WALL TYPE H. SEE FINISH PLANS FOR FINISH.
5. PAVERS. SEE SHEET AE/121.
6. BRACE FRAME. PAINT WHERE EXPOSED. SEE STRUCTURAL.
7. WINDOW SILL. SEE FINISH LEGEND.
8. WINDOW SIIL. SEE A3/AE405.
9. COUNTERTOP. SEE INTERIOR ELEVATIONS.
10. FURR WITH 1-1/2" METAL FRAMING. PROVIDE DETAIL SIMILAR TO COLUMN WRAP TYPE B. COORDINATE WITH MECHANICAL.
11. STEEL GRATE. COORDINATE WITH MECHANICAL PIPING. SEE MECHANICAL DRAWINGS.
12. WHITEBOARD. SEE ACCESSORY SCHEDULE.

KEY PLAN

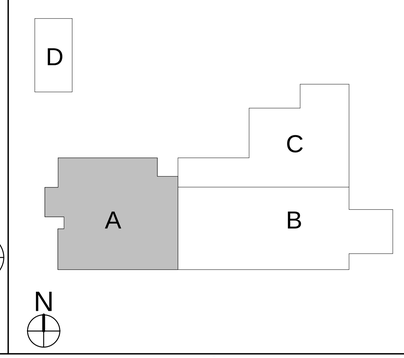

CRSA

649 E. South Temple
Salt Lake City, UT 84102
801.355.5915

MWL

11798 N. Lakeridge Pkwy.
Ashland, VA 23005
804-228-7473

State of Utah
Department of Administrative Services
Division of Facilities Construction & Management
4110 State Office Building
Salt Lake City, Utah 84114
Phone: (801) 538 - 3018
Fax: (801) 538 - 3267

DIVISION OF FACILITIES CONSTRUCTION AND MANAGEMENT
REVIEWED FOR CODE COMPLIANCE
SIGNATURE: Ernie Calle
DATE: 08-05-2014

STATE OF UTAH #134096 MEHRDAD SAMIE LICENSED ARCHITECT
04-28-2014
ARCHITECT-ENGINEER STAMP

Unified State Laboratory Module 2

4451 South 2700 West, Taylorsville, UT 84118

DFCM #: 13020300

Project #: B13-024

DATE:	ISSUE TYPE:
APRIL 21, 2014	BID SET
CHECKED BY	J. NIELSEN
DRAWN BY	F. PITORE

LEVEL 3 PLAN AREA A

AE103A

VOLUME 1

C:\Users\fernando\Documents_A_13024_Model_2013_fernando.rvt
7/14/2014 12:22:23 PM

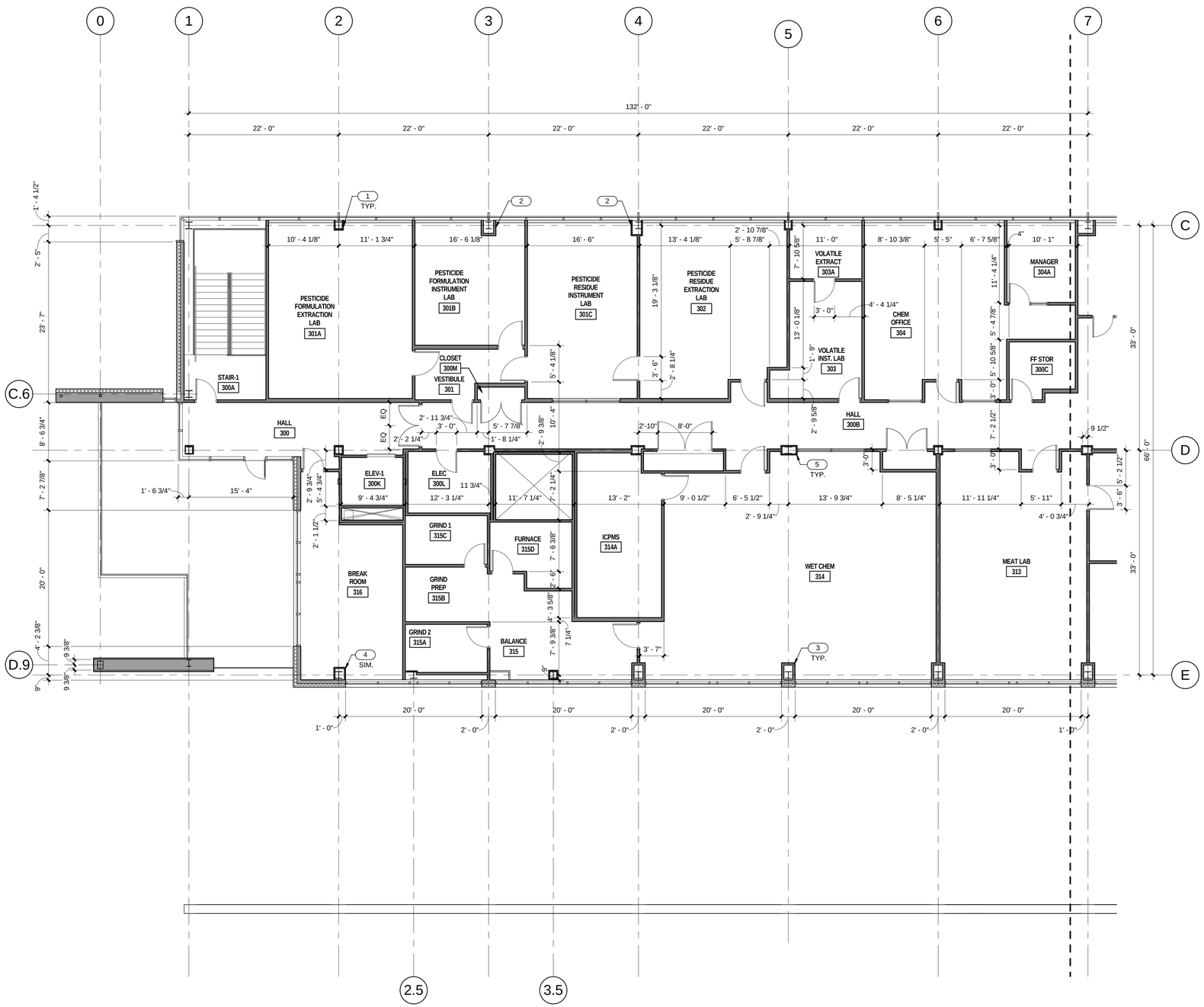

LEVEL 3 DIMENSION PLAN AREA A

1/8" = 1'-0" A4 AE103A.D

N

GENERAL NOTES

- GENERAL CONTRACTOR SHALL FIELD VERIFY ALL CONDITIONS AND SHALL REPORT TO THE ARCHITECT ANY UNKNOWN CONDITIONS, ERRORS OR CONFLICTS IN THE DRAWINGS BEFORE BEGINNING WORK.
- DO NOT SCALE DRAWINGS.

KEYED NOTES

1 COLUMN WRAP TYPE A. SEE C3/AE520
2 COLUMN WRAP TYPE B. SEE B4/AE520
3 COLUMN WRAP TYPE D. SEE A4/AE520
4 COLUMN WRAP TYPE C. SEE B5/AE520
5 COLUMN WRAP TYPE E. SEE A5/AE520

KEY PLAN

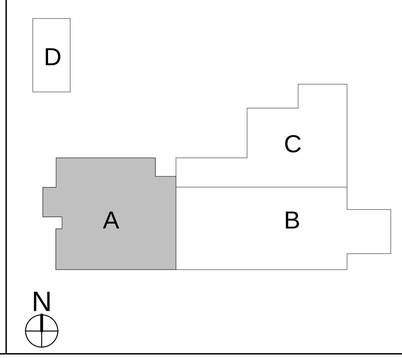

CRSA
649 E. South Temple
Salt Lake City, UT 84102
801.355.5915

MWL
11798 N. Lakeridge Pkwy.
Ashland, VA 23005
804-228-7473

State of Utah
Department of Administrative Services
Division of Facilities Construction & Management
4110 State Office Building
Salt Lake City, Utah 84114
Phone: (801) 538 - 3018
Fax: (801) 538 - 3267

DIVISION OF FACILITIES CONSTRUCTION AND MANAGEMENT
REVIEWED FOR CODE COMPLIANCE
SIGNATURE: Ernie Calle
DATE: 08-05-2014

STATE OF UTAH #134096 MEHRDAD SAMIE LICENSED ARCHITECT
04-28-2014
ARCHITECT-ENGINEER STAMP

Unified State Laboratory Module 2

4451 South 2700 West, Taylorsville, UT 84118

DFCM #: 13020300
Project #: B13-024

DATE:	ISSUE TYPE:
APRIL 21, 2014	BID SET

CHECKED BY	J. NIELSEN
DRAWN BY	F. PITORE

LEVEL 3 DIMENSION PLAN AREA A

AE103A.D

VOLUME 1

C:\Users\fernando\Documents_A_13024_Modil_2013_fernando.rvt
7/14/2014 12:22:32 PM

LEVEL 3 PLAN AREA B

1/8" = 1'-0" A4 AE103B

GENERAL NOTES

- GENERAL CONTRACTOR SHALL FIELD VERIFY ALL CONDITIONS AND SHALL REPORT TO THE ARCHITECT ANY UNKNOWN CONDITIONS, ERRORS OR CONFLICTS IN THE DRAWINGS BEFORE BEGINNING WORK.
- DO NOT SCALE DRAWINGS.
- ITEMS SHOWN BY HIDDEN LINE ARE SPECIFIED BY OTHER SECTIONS.

ALL WALLS TO BE TYPE "A" U.N.O. ON PLAN — A

FIRE EXTINGUISHER — FE

KEYED NOTES

1. SPACE FOR CUBICLE.
2. ELECTRICAL PANEL. SEE ELECTRICAL DRAWINGS.
3. DATA RACK. SEE ELECTRICAL DRAWINGS.
4. UPPER CABINET. SEE INTERIOR ELEVATIONS.
5. FURR WALL WITH WALL TYPE H. SEE FINISH PLANS FOR FINISH.
6. FLOOR BOX. SEE ELECTRICAL DRAWINGS.
7. ADJUSTABE SHELVING. SEE CASEWORK DETAILS.
8. BOOKSHELF. SEE INTERIOR ELEVATIONS.
9. BRACE FRAME. PAINT WHERE EXPOSED. SEE STRUCTURAL.
10. WINDOW SILL. SEE FINISH LEGEND.
11. STEEL COLUMN. SEE STRUCTURAL. PAINT WHERE EXPOSED.
12. CASEWORK. SEE INTERIOR ELEVATIONS.
13. WHITEBOARD. SEE ACCESSORY SCHEDULE.

KEY PLAN

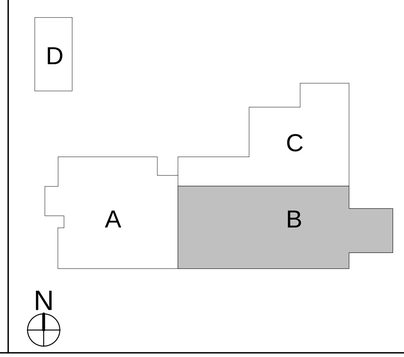

CRSA
649 E. South Temple
Salt Lake City, UT 84102
801.355.5915

MWL
11798 N. Lakeridge Pkwy.
Ashland, VA 23005
804-228-7473

State of Utah
Department of Administrative Services
Division of Facilities Construction & Management
4110 State Office Building
Salt Lake City, Utah 84114
Phone: (801) 538 - 3018
Fax: (801) 538 - 3267

DIVISION OF FACILITIES CONSTRUCTION AND MANAGEMENT
REVIEWED FOR CODE COMPLIANCE
SIGNATURE: Ernie Gallegos
DATE: 08-05-2014

STATE OF UTAH #134096 MEHRDAD SAMIE LICENSED ARCHITECT
04.28.2014
ARCHITECT-ENGINEER STAMP

Unified State Laboratory Module 2

4451 South 2700 West, Taylorsville, UT 84118

DFCM #:	13020300
Project #:	B13-024
DATE:	ISSUE TYPE:
APRIL 21, 2014	BID SET
CHECKED BY	J. NIELSEN
DRAWN BY	F. PITORE

LEVEL 3 PLAN AREA B

AE103B

VOLUME 1

C:\Users\fernando\Documents_A_13024_Modli_2013_fernando.rvt
7/14/2014 12:22:43 PM

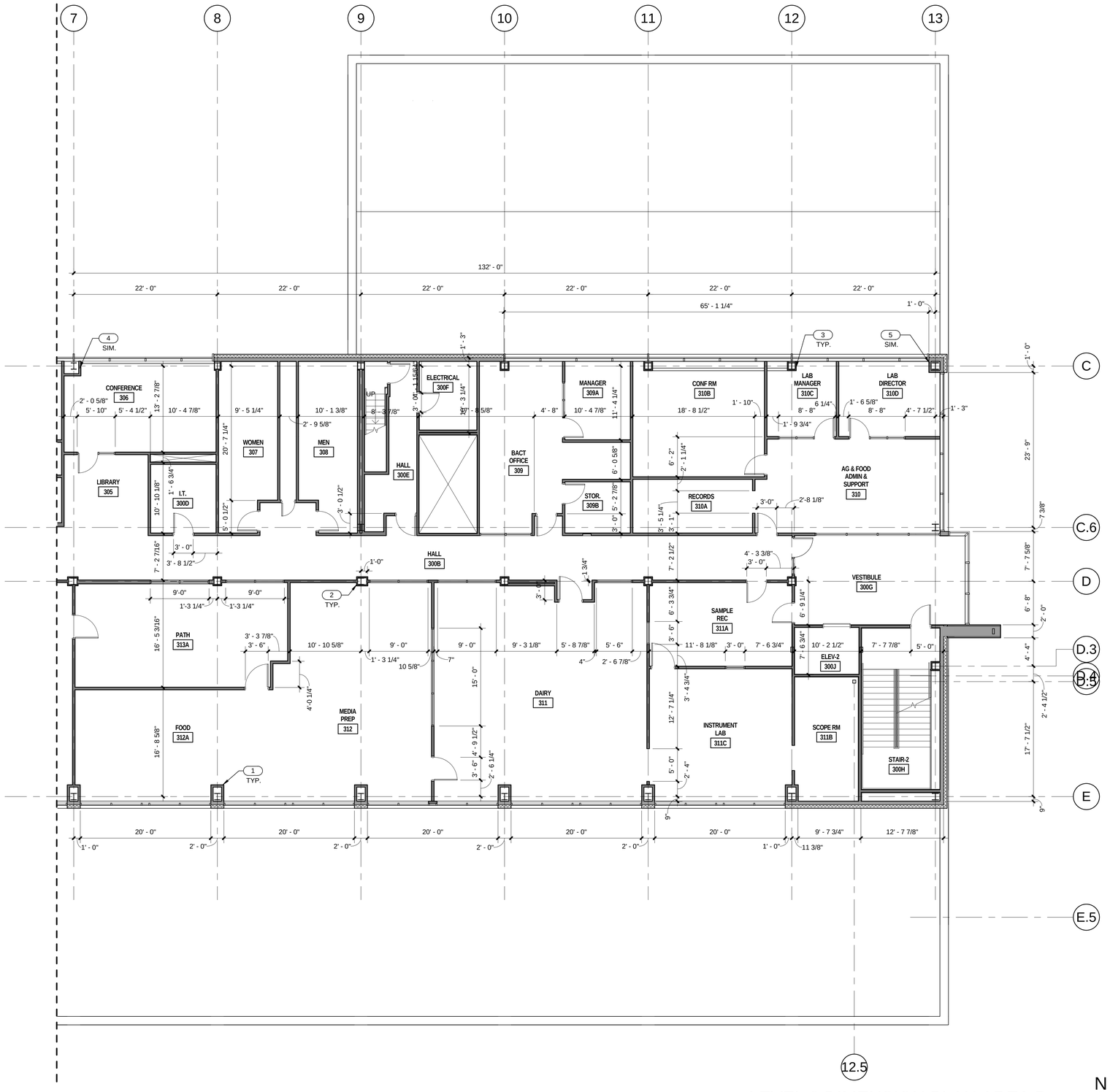

LEVEL 3 DIMENSION PLAN AREA B

1/8" = 1'-0"

A4 AE103B.D

N

GENERAL NOTES

- GENERAL CONTRACTOR SHALL FIELD VERIFY ALL CONDITIONS AND SHALL REPORT TO THE ARCHITECT ANY UNKNOWN CONDITIONS, ERRORS OR CONFLICTS IN THE DRAWINGS BEFORE BEGINNING WORK.
- DO NOT SCALE DRAWINGS.

KEYED NOTES

1 COLUMN WRAP TYPE D. SEE A4/AE520
2 COLUMN WRAP TYPE E. SEE A5/AE520
3 COLUMN WRAP TYPE A. SEE C3/AE520
4 COLUMN WRAP TYPE B. SEE B4/AE520
5 COLUMN WRAP TYPE C. SEE B5/AE520

KEY PLAN

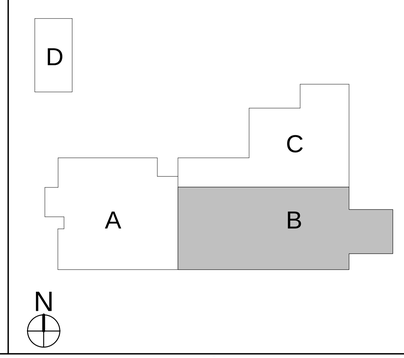

CRSA
649 E. South Temple
Salt Lake City, UT 84102
801.355.5915

MWL
11798 N. Lakeridge Pkwy.
Ashland, VA 23005
804-228-7473

State of Utah
Department of Administrative Services
Division of Facilities Construction & Management
4110 State Office Building
Salt Lake City, Utah 84114
Phone: (801) 538 - 3018
Fax: (801) 538 - 3267

DIVISION OF FACILITIES CONSTRUCTION AND MANAGEMENT
REVIEWED FOR CODE COMPLIANCE
SIGNATURE: Ernie Cate
DATE: 08-05-2014

STATE OF UTAH #134096 MEHRDAD SAMIE LICENSED ARCHITECT
04-28-2014
ARCHITECT-ENGINEER STAMP

Unified State Laboratory Module 2

4451 South 2700 West, Taylorsville, UT 84118

DFCM #: 13020300
Project #: B13-024

DATE:	ISSUE TYPE:
APRIL 21, 2014	BID SET

CHECKED BY: J. NIELSEN
DRAWN BY: F. PITORE

LEVEL 3 DIMENSION PLAN AREA B

AE103B.D

VOLUME 1

C:\Users\fernando\Documents_A_13024_Modl_2013_fernando.rvt
7/14/2014 12:22:52 PM

KEYED NOTES

1. 6"X6" CONCRETE CURB
2. 6" CONCRETE HOUSEKEEPING PAD. COORDINATE SIZE & PLACEMENT WITH MECHANICAL EQUIPMENT. SEE FINISH SCHEDULE.
3. MECHANICAL EQUIPMENT. SEE MECHANICAL DRAWINGS.
4. MECHANICAL LOUVER. SEE MECHANICAL DRAWINGS.
5. BRACE FRAME. PAINT WHERE EXPOSED. SEE STRUCTURAL.
6. FLOOR DRAIN. SLOPE FLOOR TO DRAIN AS SHOWN. SEE PLUMBING DRAWINGS.
7. FLOOR SINK. SEE PLUMBING DRAWINGS.
8. AIR HANDLER. SEE MECHANICAL DRAWINGS.

GENERAL NOTES

- GENERAL CONTRACTOR SHALL FIELD VERIFY ALL CONDITIONS AND SHALL REPORT TO THE ARCHITECT ANY UNKNOWN CONDITIONS, ERRORS OR CONFLICTS IN THE DRAWINGS BEFORE BEGINNING WORK.
- DO NOT SCALE DRAWINGS.
- ITEMS SHOWN BY HIDDEN LINE ARE SPECIFIED BY OTHER SECTIONS.

ALL WALLS TO BE TYPE "A" U.N.O. ON PLAN — A

FIRE EXTINGUISHER — FE

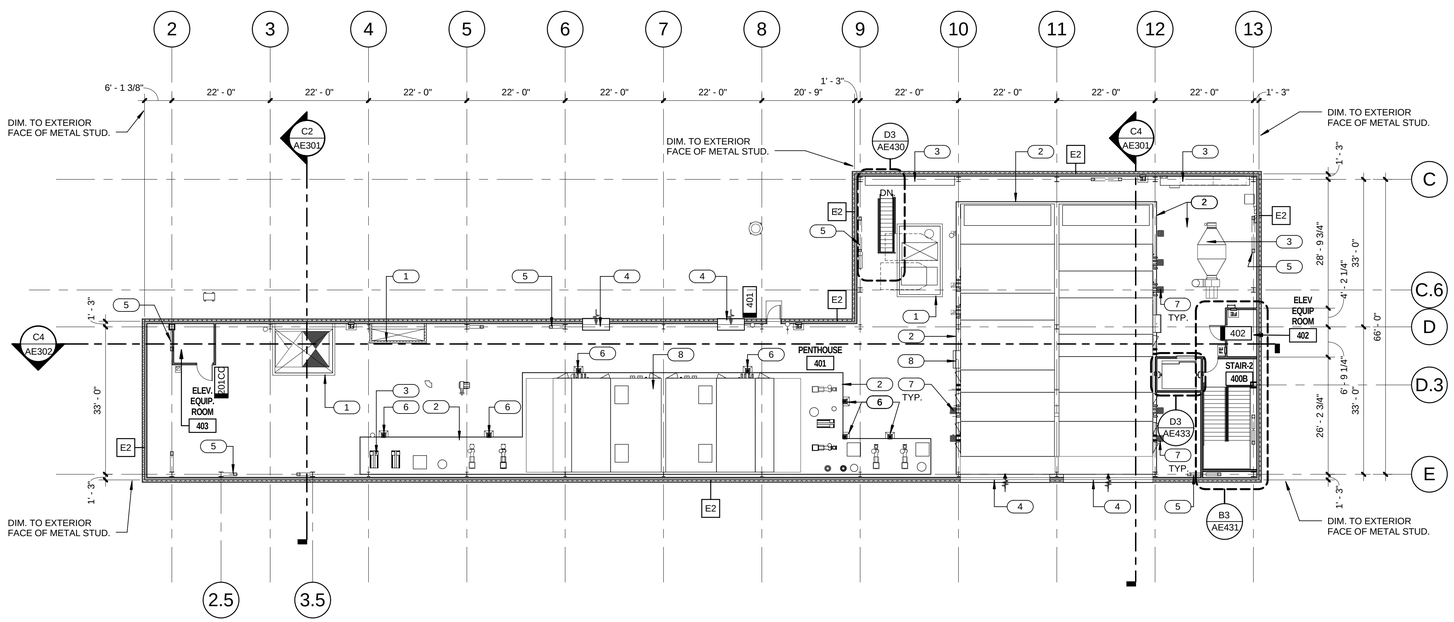

PENTHOUSE LEVEL FLOOR PLAN (A5 / AE104)

1/16" = 1'-0"

N

CRSA
649 E. South Temple
Salt Lake City, UT 84102
801.355.5915

MWL
11798 N. Lakeridge Pkwy.
Ashland, VA 23005
804-228-7473

State of Utah
Department of Administrative Services
Division of Facilities Construction & Management
4110 State Office Building
Salt Lake City, Utah 84114
Phone: (801) 538 - 3018
Fax: (801) 538 - 3267

DIVISION OF FACILITIES CONSTRUCTION AND MANAGEMENT
REVIEWED FOR CODE COMPLIANCE
SIGNATURE: Ernie Galt
DATE: 08-05-2014

STATE OF UTAH #134096 MEHRDAD SAMIE LICENSED ARCHITECT
04-28-2014
ARCHITECT-ENGINEER STAMP

Unified State Laboratory Module 2

4451 South 2700 West, Taylorsville, UT 84118

DFCM #:	13020300
Project #:	B13-024
DATE:	ISSUE TYPE:
APRIL 21, 2014	BID SET
CHECKED BY	J. NIELSEN
DRAWN BY	F. PITORE

PENTHOUSE LEVEL FLOOR PLAN

AE104

VOLUME 1

C:\Users\fernando\Documents_A_13024_Modli_2013_fernando.rvt
7/14/2014 12:23:05 PM

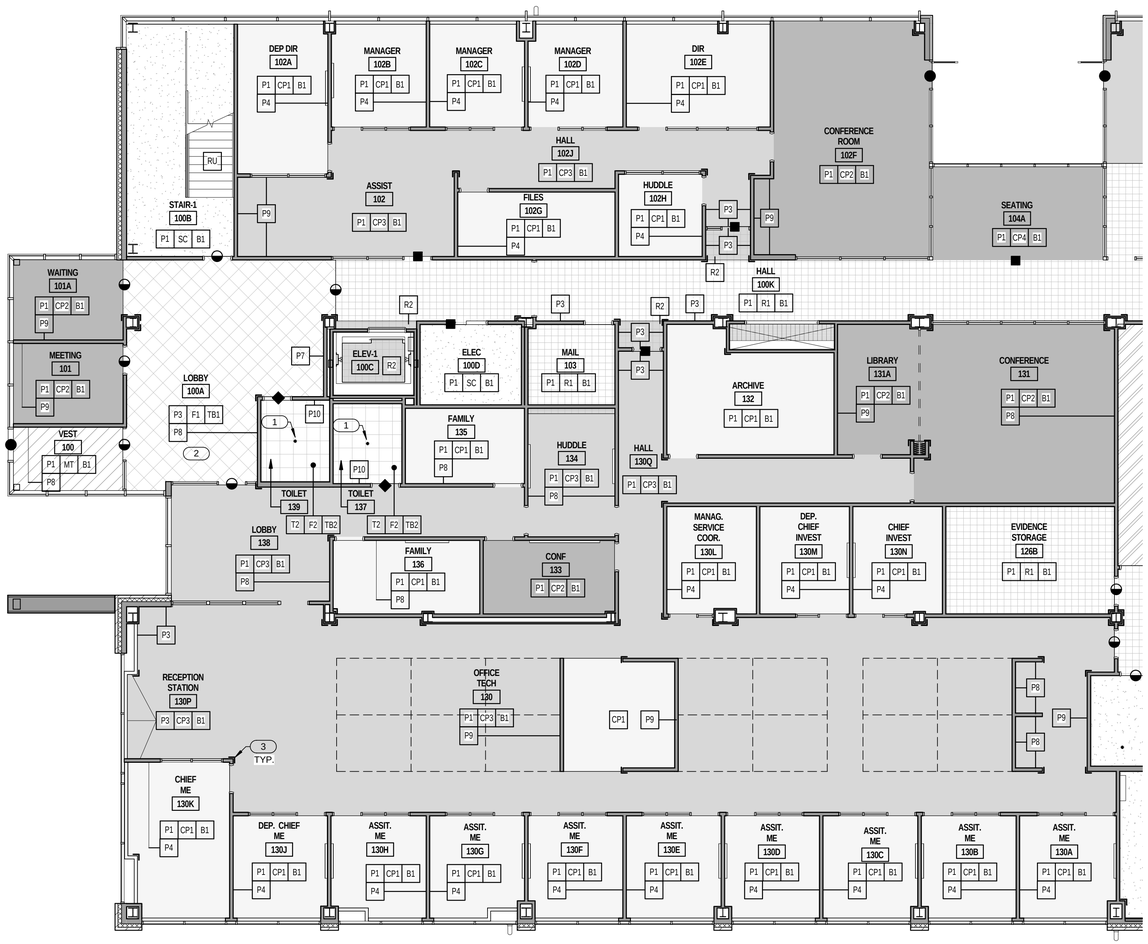

LEVEL 1 AREA A FINISH PLAN

1/8" = 1'-0"

A4 AE105A

N

GENERAL NOTES

- GENERAL CONTRACTOR SHALL FIELD VERIFY ALL CONDITIONS AND SHALL REPORT TO THE ARCHITECT ANY UNKNOWN CONDITIONS, ERRORS OR CONFLICTS IN THE DRAWINGS BEFORE BEGINNING WORK.
- DO NOT SCALE DRAWINGS.

CARPET

ENTRY MAT

SEALED CONCRETE

TILE 1

TILE 2

EPOXY TERRAZZO FLOORING

RESILIENT FLOORING
ACCENT COLOR — A

STAINLESS STEEL CORNER GUARD — L

MARBLE THRESHOLD, SEE DETAIL D5/AE560

ALUMINUM THRESHOLD, SEE DETAIL D4/AE560

ALUMINUM TRANSITION STRIP, SEE DETAIL D3/AE560

VINYL TRANSITION STRIP, SEE DETAIL D2/AE560

FINISH KEY LEGEND — W F B
WALL FINISH
FLOOR FINISH
BASE FINISH

BUMPER GUARD, SEE DETAIL D4/AE520

KEYED NOTES

1 FLOOR DRAIN. SLOPE FLOOR TO DRAIN AS SHOWN. SEE PLUMBING DRAWINGS.
2 SEE A5/AE560 FOR FLOOR PATTERN.
3 STAINLESS STEEL CORNER GUARD. SEE SPECS.

KEY PLAN

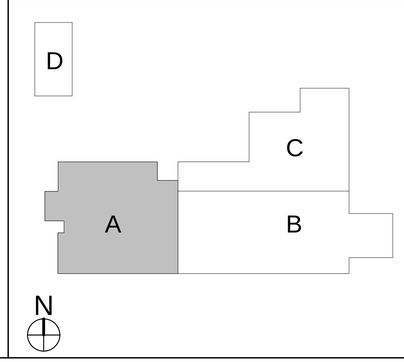

CRSA
649 E. South Temple
Salt Lake City, UT 84102
801.355.5915

MWL
11798 N. Lakeridge Pkwy.
Ashland, VA 23005
804-228-7473

State of Utah
Department of Administrative Services
Division of Facilities Construction & Management
4110 State Office Building
Salt Lake City, Utah 84114
Phone: (801) 538 - 3018
Fax: (801) 538 - 3267

DIVISION OF FACILITIES CONSTRUCTION AND MANAGEMENT
REVIEWED FOR CODE COMPLIANCE
SIGNATURE: Ernie Ralph
DATE: 08-05-2014

STATE OF UTAH #134096 MEHRDAD SAMIE LICENSED ARCHITECT
04.28.2014
ARCHITECT-ENGINEER STAMP

Unified State Laboratory Module 2

4451 South 2700 West, Taylorsville, UT 84118

DFCM #: 13020300
Project #: B13-024

DATE:	ISSUE TYPE:
APRIL 21, 2014	BID SET

CHECKED BY: J. NIELSEN
DRAWN BY: F. PITORE

LEVEL 1 AREA A FINISH PLAN

AE105A

VOLUME 1

C:\Users\fernando\Documents_A_13024_Modll_2013_fernando.rvt
7/14/2014 12:23:15 PM

KEYED NOTES

1. TRENCH DRAIN. SEE PLUMBING DRAWINGS.
2. FLOOR DRAIN. SLOPE FLOOR TO DRAIN AS SHOWN. SEE PLUMBING DRAWINGS.
3. CASEWORK, COORDINATE WITH LAB DRAWINGS.
4. 4" WIDE WHITE PAVEMENT MARKING AS SHOWN. REFER TO SPECS.
5. STAINLESS STEEL CORNER GUARD. SEE SPECS.
6. RESILIENT FLOORING ACCENT TO ALIGN WITH CASEWORK U.NO. COORDINATE WITH LAB DRAWINGS.

GENERAL NOTES

- GENERAL CONTRACTOR SHALL FIELD VERIFY ALL CONDITIONS AND SHALL REPORT TO THE ARCHITECT ANY UNKNOWN CONDITIONS, ERRORS OR CONFLICTS IN THE DRAWINGS BEFORE BEGINNING WORK.
- DO NOT SCALE DRAWINGS.

CARPET

ENTRY MAT

SEALED CONCRETE

TILE 1

TILE 2

EPOXY TERRAZZO FLOORING

RESILIENT FLOORING
ACCENT COLOR — A

STAINLESS STEEL CORNER GUARD

MARBLE THRESHOLD, SEE DETAIL D5/AE560

ALUMINUM THRESHOLD, SEE DETAIL D4/AE560

ALUMINUM TRANSITION STRIP, SEE DETAIL D3/AE560

VINYL TRANSITION STRIP, SEE DETAIL D2/AE560

FINISH KEY LEGEND — W F B
WALL FINISH
FLOOR FINISH
BASE FINISH

BUMPER GUARD, SEE DETAIL D4/AE520

KEY PLAN

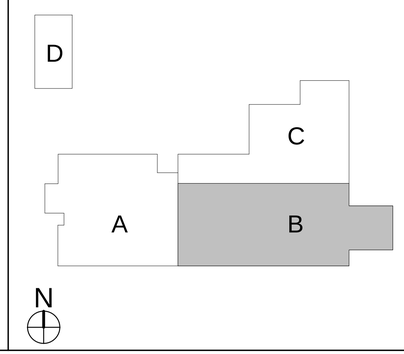

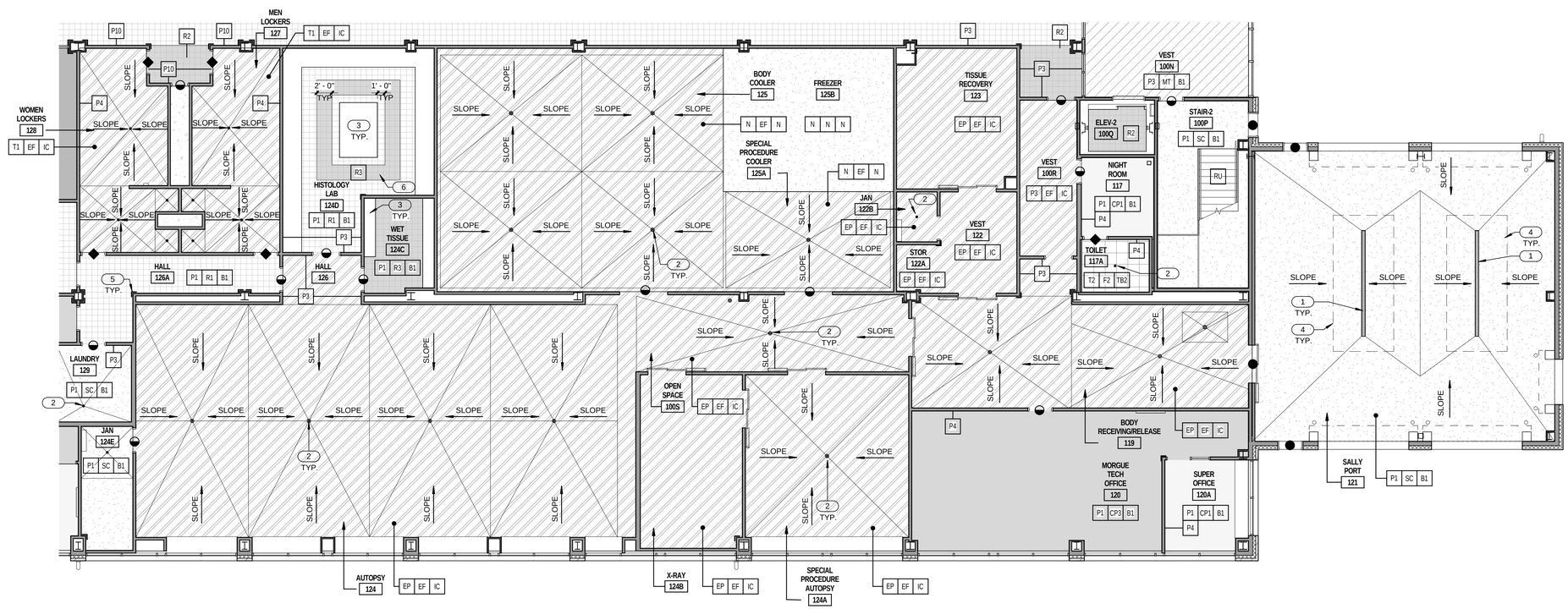

LEVEL 1 AREA B FINISH PLAN
1/8" = 1'-0"

CRSA
649 E. South Temple
Salt Lake City, UT 84102
801.355.5915

MWL
11798 N. Lakeridge Pkwy.
Ashland, VA 23005
804-228-7473

State of Utah
Department of Administrative Services
Division of Facilities Construction & Management
4110 State Office Building
Salt Lake City, Utah 84114
Phone: (801) 538 - 3018
Fax: (801) 538 - 3267

DIVISION OF FACILITIES CONSTRUCTION AND MANAGEMENT
REVIEWED FOR CODE COMPLIANCE
SIGNATURE: Ernie Gallegos
DATE: 08-05-2014

STATE OF UTAH
#134096
MEHRDAD SAMIE
LICENSED ARCHITECT
04-28-2014
ARCHITECT-ENGINEER STAMP

Unified State Laboratory Module 2

4451 South 2700 West,
Taylorsville, UT 84118

DFCM #: 13020300
Project #: B13-024

DATE:	ISSUE TYPE:
APRIL 21, 2014	BID SET

CHECKED BY: J. NIELSEN
DRAWN BY: F. PITORE

LEVEL 1 AREA B FINISH PLAN

AE105B

VOLUME 1

C:\Users\fernando\Documents_A_13024_Modli_2013_fernando.rvt
7/14/2014 12:23:25 PM

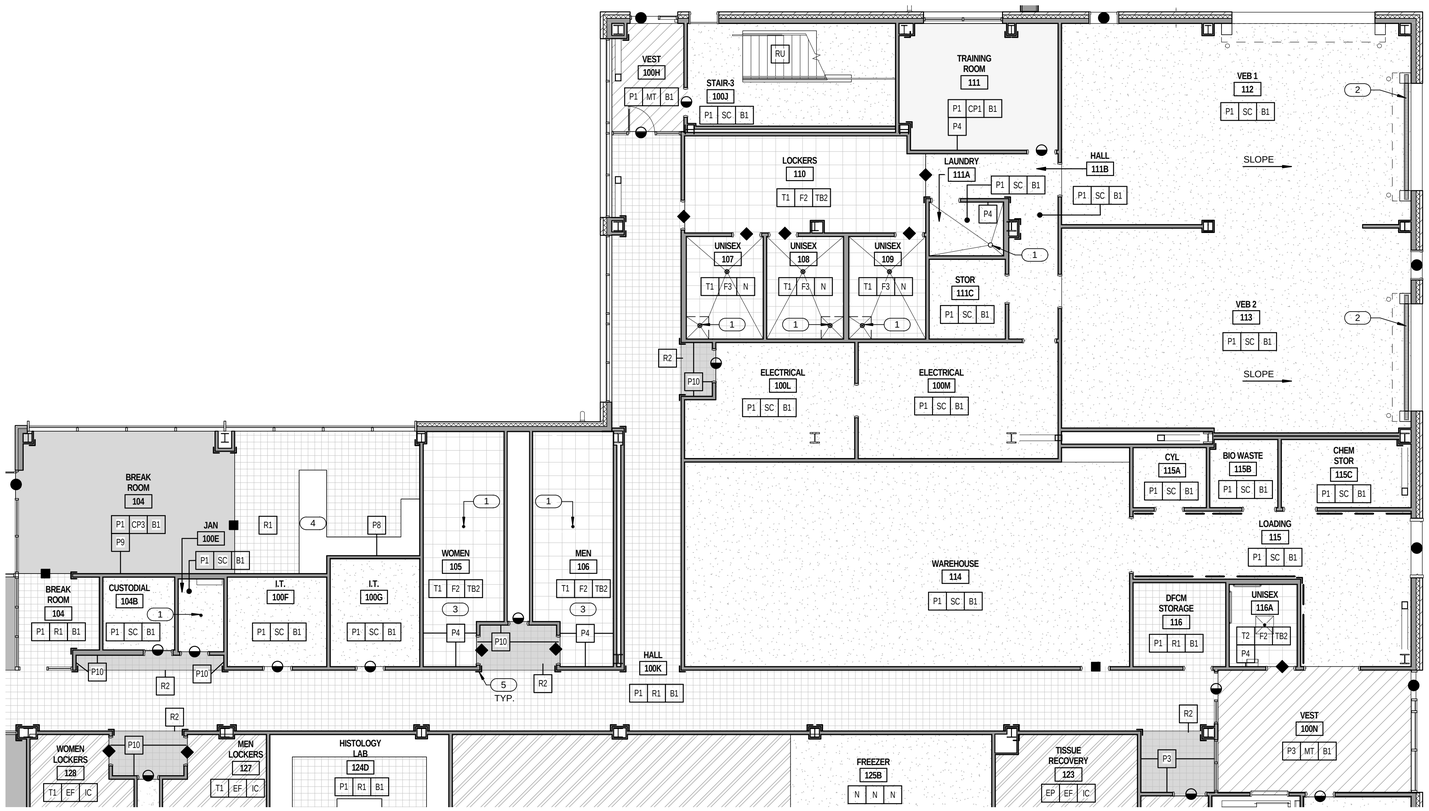

LEVEL 1 AREA C FINISH PLAN

1/8" = 1'-0"

A4 AE105C

N

GENERAL NOTES

- GENERAL CONTRACTOR SHALL FIELD VERIFY ALL CONDITIONS AND SHALL REPORT TO THE ARCHITECT ANY UNKNOWN CONDITIONS, ERRORS OR CONFLICTS IN THE DRAWINGS BEFORE BEGINNING WORK.
- DO NOT SCALE DRAWINGS.

CARPET

ENTRY MAT

SEALED CONCRETE

TILE 1

TILE 2

EPOXY TERRAZZO FLOORING

RESILIENT FLOORING
ACCENT COLOR — A

STAINLESS STEEL CORNER GUARD — L

MARBLE THRESHOLD, SEE DETAIL D5/AE560

ALUMINUM THRESHOLD, SEE DETAIL D4/AE560

ALUMINUM TRANSITION STRIP, SEE DETAIL D3/AE560

VINYL TRANSITION STRIP, SEE DETAIL D2/AE560

FINISH KEY LEGEND — WALL FINISH W, FLOOR FINISH F, BASE FINISH B

BUMPER GUARD, SEE DETAIL D4/AE520

KEYED NOTES

1. FLOOR DRAIN. SLOPE FLOOR TO DRAIN AS SHOWN. SEE PLUMBING DRAWINGS.
2. TRENCH DRAIN. SEE PLUMBING DRAWINGS.
3. SEE C5/AE560 FOR FLOOR PATTERN.
4. CASEWORK, COORDINATE WITH CABINETRY. REFER TO FLOOR AREA FLOOR PLANS.
5. STAINLESS STEEL CORNER GUARD. SEE SPECS.

KEY PLAN

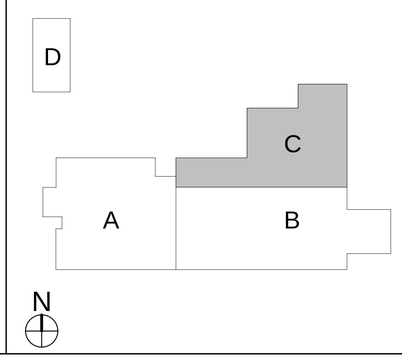

CRSA

649 E. South Temple
Salt Lake City, UT 84102
801.355.5915

MWL

11798 N. Lakeridge Pkwy.
Ashland, VA 23005
804-228-7473

State of Utah
Department of Administrative Services

DFCM
Division of Facilities Construction & Management
4110 State Office Building
Salt Lake City, Utah 84114
Phone: (801) 538 - 3018
Fax: (801) 538 - 3267

DIVISION OF FACILITIES CONSTRUCTION AND MANAGEMENT
REVIEWED FOR CODE COMPLIANCE
SIGNATURE: Ernie Cate
DATE: 08-05-2014

STATE OF UTAH
#134096
MEHRDAD SAMIE
LICENSED ARCHITECT
04-28-2014
ARCHITECT-ENGINEER STAMP

Unified State Laboratory Module 2

4451 South 2700 West,
Taylorsville, UT 84118

DFCM #: 13020300

Project #: B13-024

DATE:	ISSUE TYPE:
APRIL 21, 2014	BID SET

CHECKED BY: J. NIELSEN

DRAWN BY: F. PITORE

LEVEL 1 AREA C FINISH PLAN

AE105C

VOLUME 1

C:\Users\fernando\Documents_A_13024_Modli_2013_fernando.rvt
7/14/2014 12:23:35 PM

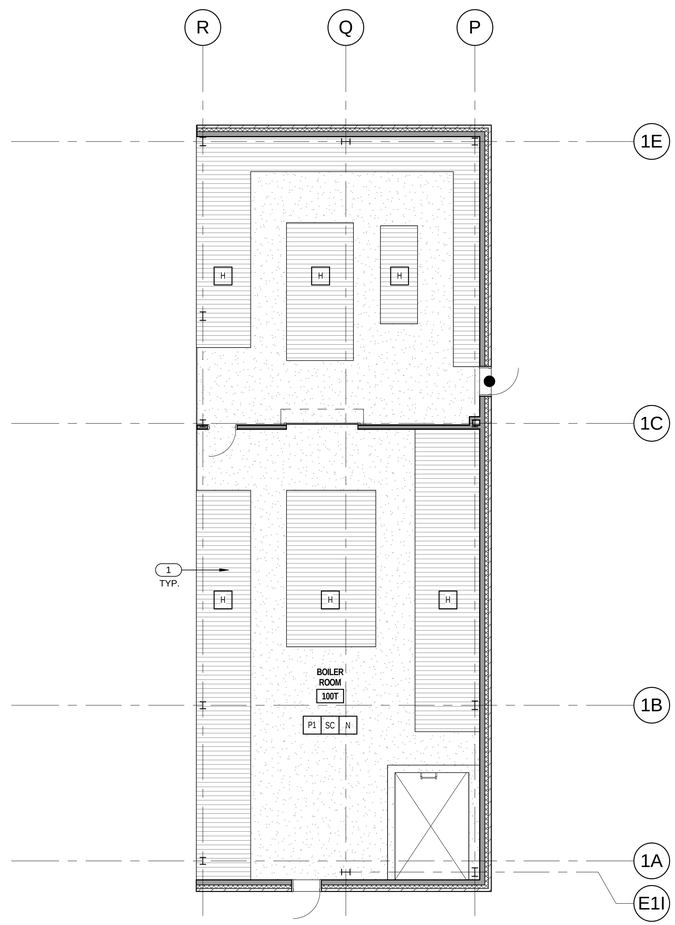

LEVEL 1 AREA D FINISH PLAN (A4 / AE105D)

1/8" = 1'-0"

GENERAL NOTES

- GENERAL CONTRACTOR SHALL FIELD VERIFY ALL CONDITIONS AND SHALL REPORT TO THE ARCHITECT ANY UNKNOWN CONDITIONS, ERRORS OR CONFLICTS IN THE DRAWINGS BEFORE BEGINNING WORK.
- DO NOT SCALE DRAWINGS.

CARPET

ENTRY MAT

SEALED CONCRETE

TILE 1

TILE 2

EPOXY TERRAZZO FLOORING

RESILIENT FLOORING
ACCENT COLOR — A

STAINLESS STEEL CORNER GUARD

MARBLE THRESHOLD, SEE DETAIL D5/AE560

ALUMINUM THRESHOLD, SEE DETAIL D4/AE560

ALUMINUM TRANSITION STRIP, SEE DETAIL D3/AE560

VINYL TRANSITION STRIP, SEE DETAIL D2/AE560

FINISH KEY LEGEND — W F B
WALL FINISH
FLOOR FINISH
BASE FINISH

BUMPER GUARD, SEE DETAIL D4/AE520

KEYED NOTES

1 6" CONCRETE HOUSEKEEPING PAD. COORDINATE SIZE & PLACEMENT WITH MECHANICAL EQUIPMENT. SEE FINISH SCHEDULE.

KEY PLAN

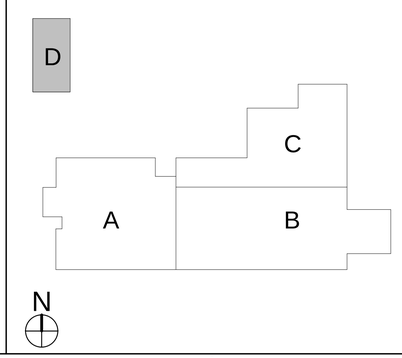

CRSA

649 E. South Temple
Salt Lake City, UT 84102
801.355.5915

MWL

11798 N. Lakeridge Pkwy.
Ashland, VA 23005
804-228-7473

State of Utah
Department of Administrative Services
Division of Facilities Construction & Management
4110 State Office Building
Salt Lake City, Utah 84114
Phone: (801) 538 - 3018
Fax: (801) 538 - 3267

DIVISION OF FACILITIES CONSTRUCTION AND MANAGEMENT
REVIEWED FOR CODE COMPLIANCE
SIGNATURE: Ernie Calfe
DATE: 08-05-2014

STATE OF UTAH
#134096
MEHRDAD SAMII
LICENSED ARCHITECT
04.28.2014
ARCHITECT-ENGINEER STAMP

Unified State Laboratory Module 2

4451 South 2700 West,
Taylorsville, UT 84118

DFCM #: 13020300

Project #: B13-024

DATE:	ISSUE TYPE:
APRIL 21, 2014	BID SET

CHECKED BY	J. NIELSEN
DRAWN BY	F. PITORE

LEVEL 1 AREA D FINISH PLAN

AE105D

VOLUME 1

C:\Users\fernando\Documents_A_13024_Modli_2013_fernando.rvt
7/14/2014 12:23:42 PM

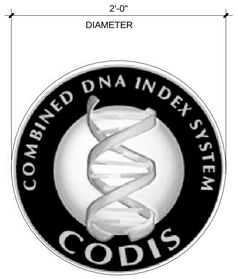

LOGO TO BE INSTALLED IN RESILIENT FLOORING BY FLOORING CONTRACTOR USING WATERJET METHOD.

IMAGE A (D1 / AE106A)
1 1/2" = 1'-0"

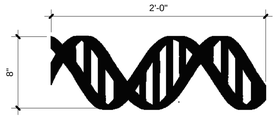

LOGO TO BE INSTALLED IN RESILIENT FLOORING BY FLOORING CONTRACTOR USING WATERJET METHOD.

IMAGE B (D2 / AE106A)
1 1/2" = 1'-0"

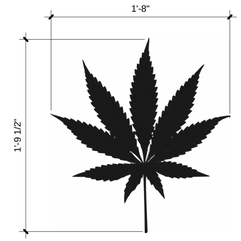

LOGO TO BE INSTALLED IN RESILIENT FLOORING BY FLOORING CONTRACTOR USING WATERJET METHOD.

IMAGE C (D3 / AE106A)
1 1/2" = 1'-0"

LOGO TO BE INSTALLED IN RESILIENT FLOORING BY FLOORING CONTRACTOR USING WATERJET METHOD.

IMAGE D (D4 / AE106A)
1 1/2" = 1'-0"

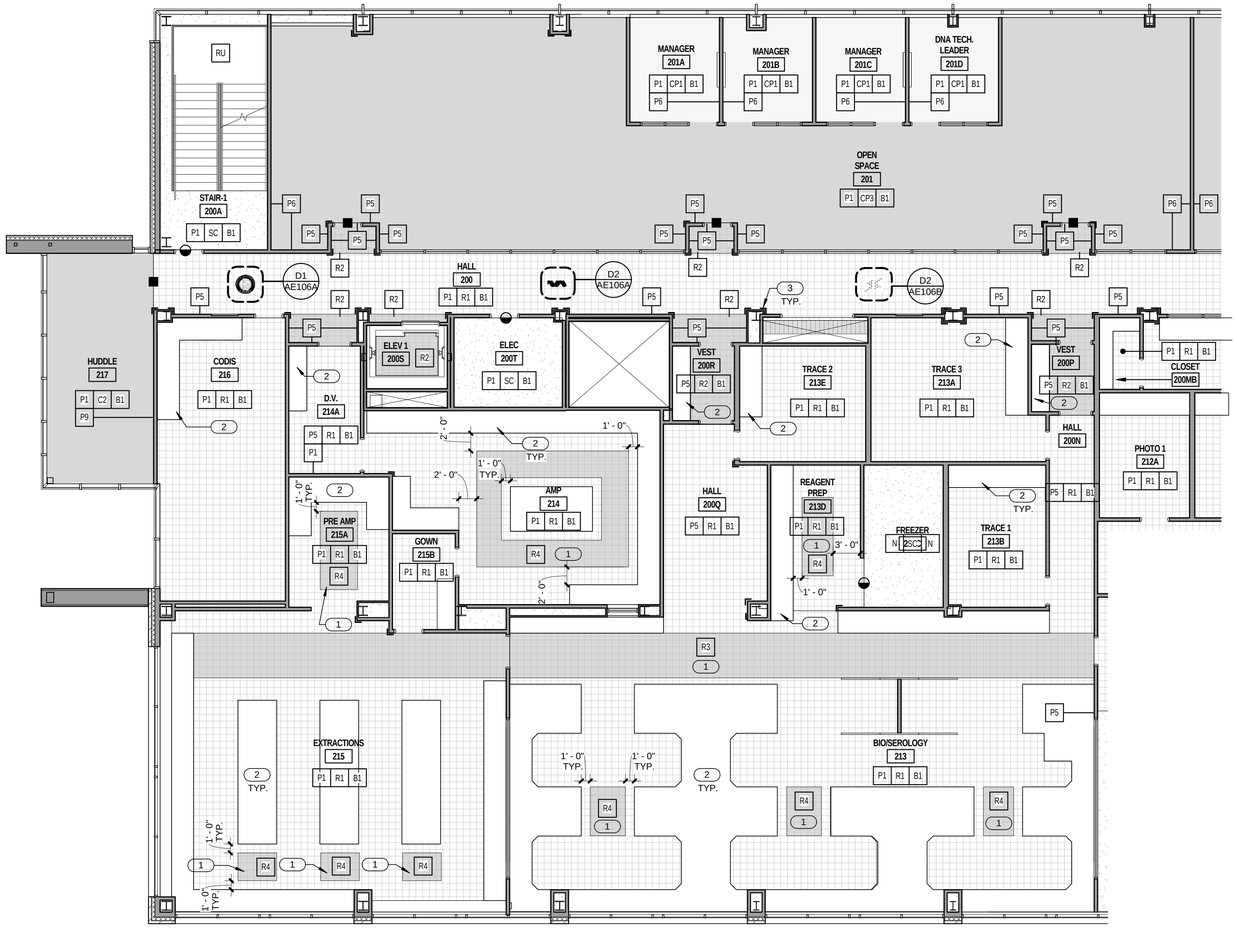

LEVEL 2 AREA A FINISH PLAN
(A4 / AE106A)
1/8" = 1'-0"

N

GENERAL NOTES

- GENERAL CONTRACTOR SHALL FIELD VERIFY ALL CONDITIONS AND SHALL REPORT TO THE ARCHITECT ANY UNKNOWN CONDITIONS, ERRORS OR CONFLICTS IN THE DRAWINGS BEFORE BEGINNING WORK.
- DO NOT SCALE DRAWINGS.

CARPET

ENTRY MAT

SEALED CONCRETE

TILE 1

TILE 2

EPOXY TERRAZZO FLOORING

RESILIENT FLOORING
ACCENT COLOR — A

STAINLESS STEEL CORNER GUARD — L

MARBLE THRESHOLD, SEE DETAIL D5/AE560

ALUMINUM THRESHOLD, SEE DETAIL D4/AE560

ALUMINUM TRANSITION STRIP, SEE DETAIL D3/AE560

VINYL TRANSITION STRIP, SEE DETAIL D2/AE560

FINISH KEY LEGEND — W F B
WALL FINISH
FLOOR FINISH
BASE FINISH

BUMPER GUARD, SEE DETAIL D4/AE520

KEYED NOTES

1 RESILIENT FLOORING ACCENT TO ALIGN WITH CASEWORK U.NO. COORDINATE WITH LAB DRAWINGS.
2 CASEWORK. COORDINATE WITH LAB DRAWINGS.
3 STAINLESS STEEL CORNER GUARD. SEE SPECS.

KEY PLAN

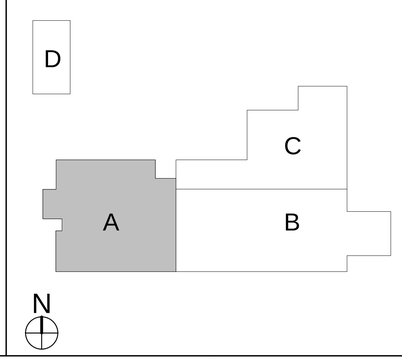

CRSA
649 E. South Temple
Salt Lake City, UT 84102
801.355.5915

MWL
11798 N. Lakeridge Pkwy.
Ashland, VA 23005
804-228-7473

State of Utah
Department of Administrative Services
Division of Facilities Construction & Management
4110 State Office Building
Salt Lake City, Utah 84114
Phone: (801) 538 - 3018
Fax: (801) 538 - 3267

DIVISION OF FACILITIES CONSTRUCTION AND MANAGEMENT
REVIEWED FOR CODE COMPLIANCE
SIGNATURE: Ernie Calfee
DATE: 08-05-2014

STATE OF UTAH #134096 MEHRDAD SAMIE LICENSED ARCHITECT
04.28.2014
ARCHITECT-ENGINEER STAMP

Unified State Laboratory Module 2

4451 South 2700 West, Taylorsville, UT 84118

DFCM #: 13020300
Project #: B13-024

DATE:	ISSUE TYPE:
APRIL 21, 2014	BID SET

CHECKED BY: J. NIELSEN
DRAWN BY: F. PITORE

LEVEL 2 AREA A FINISH PLAN

AE106A
VOLUME 1

C:\Users\fernando\Documents_A_13024_Modli_2013_fernando.rvt
7/14/2014 12:23:53 PM

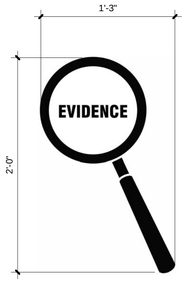

LOGO TO BE INSTALLED IN RESILIENT FLOORING BY FLOORING CONTRACTOR USING WATERJET METHOD.

IMAGE E (D1 / AE106B)
1 1/2" = 1'-0"

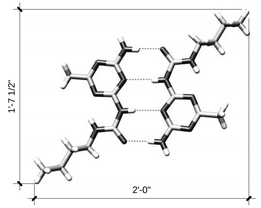

LOGO TO BE INSTALLED IN RESILIENT FLOORING BY FLOORING CONTRACTOR USING WATERJET METHOD.

IMAGE F (D2 / AE106B)
1 1/2" = 1'-0"

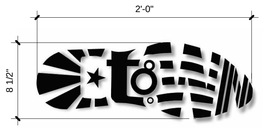

LOGO TO BE INSTALLED IN RESILIENT FLOORING BY FLOORING CONTRACTOR USING WATERJET METHOD.

IMAGE G (D3 / AE106B)
1 1/2" = 1'-0"

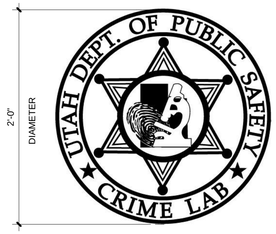

LOGO TO BE INSTALLED IN RESILIENT FLOORING BY FLOORING CONTRACTOR USING WATERJET METHOD.

IMAGE H (D4 / AE106B)
1 1/2" = 1'-0"

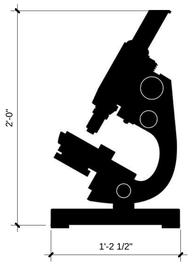

LOGO TO BE INSTALLED IN RESILIENT FLOORING BY FLOORING CONTRACTOR USING WATERJET METHOD.

IMAGE J (D5 / AE106B)
1 1/2" = 1'-0"

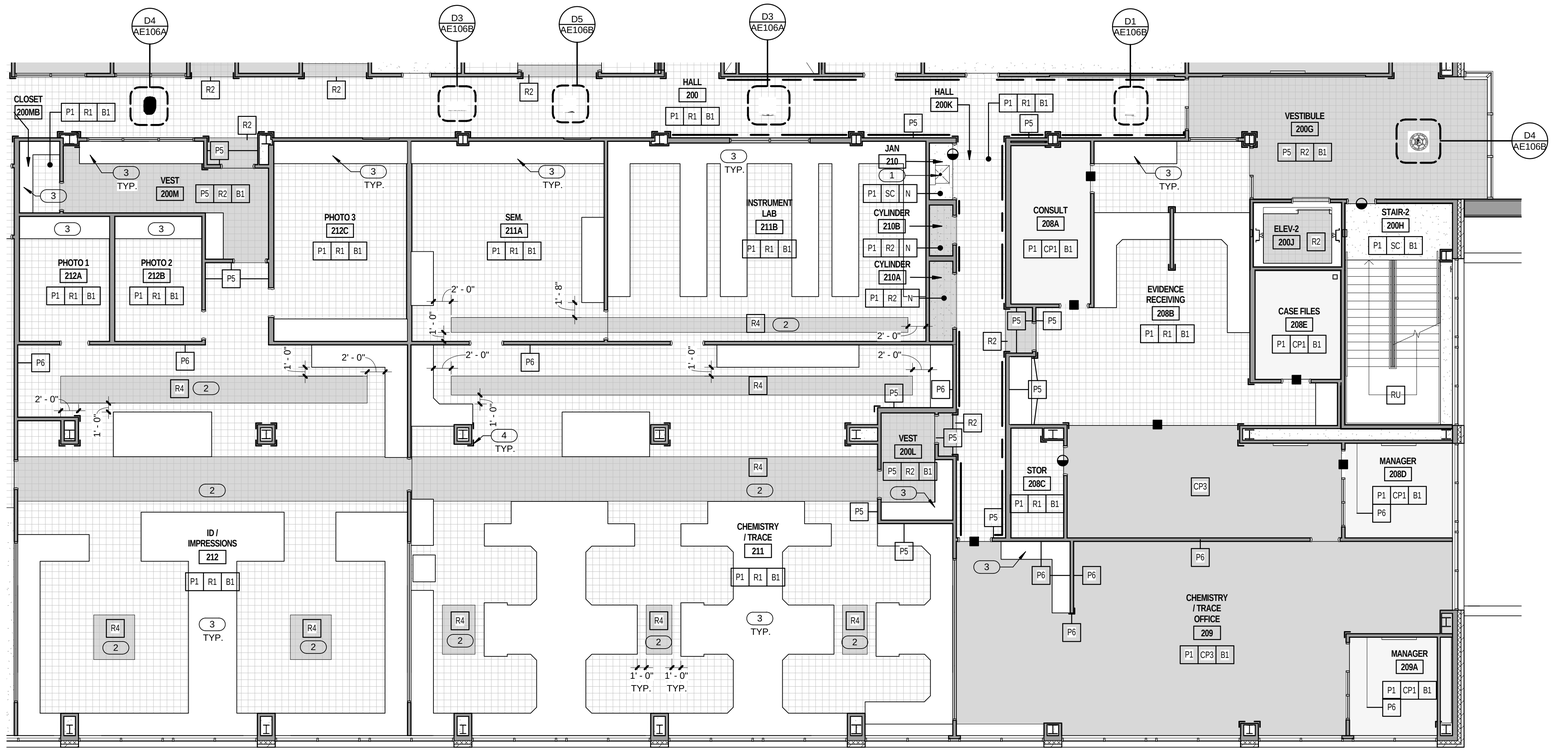

LEVEL 2 AREA B FINISH PLAN (A4 / AE106B)
1/8" = 1'-0"

N

GENERAL NOTES

- GENERAL CONTRACTOR SHALL FIELD VERIFY ALL CONDITIONS AND SHALL REPORT TO THE ARCHITECT ANY UNKNOWN CONDITIONS, ERRORS OR CONFLICTS IN THE DRAWINGS BEFORE BEGINNING WORK.
- DO NOT SCALE DRAWINGS.

CARPET

ENTRY MAT

SEALED CONCRETE

TILE 1

TILE 2

EPOXY TERRAZZO FLOORING

RESILIENT FLOORING
ACCENT COLOR — A

STAINLESS STEEL CORNER GUARD — L

MARBLE THRESHOLD, SEE DETAIL D5/AE560

ALUMINUM THRESHOLD, SEE DETAIL D4/AE560

ALUMINUM TRANSITION STRIP, SEE DETAIL D3/AE560

VINYL TRANSITION STRIP, SEE DETAIL D2/AE560

FINISH KEY LEGEND — WALL FINISH (W), FLOOR FINISH (F), BASE FINISH (B)

BUMPER GUARD, SEE DETAIL D4/AE520

KEYED NOTES

1. FLOOR DRAIN. SLOPE FLOOR TO DRAIN AS SHOWN. SEE PLUMBING DRAWINGS.
2. RESILIENT FLOORING ACCENT TO ALIGN WITH CASEWORK U.NO. COORDINATE WITH LAB DRAWINGS.
3. CASEWORK, COORDINATE WITH LAB DRAWINGS.
4. STAINLESS STEEL CORNER GUARD. SEE SPECS.

KEY PLAN

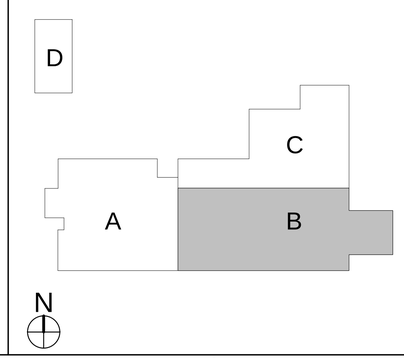

CRSA
649 E. South Temple
Salt Lake City, UT 84102
801.355.5915

MWL
11798 N. Lakeridge Pkwy.
Ashland, VA 23005
804-228-7473

State of Utah
Department of Administrative Services
Division of Facilities Construction & Management
4110 State Office Building
Salt Lake City, Utah 84114
Phone: (801) 538 - 3018
Fax: (801) 538 - 3267

DIVISION OF FACILITIES CONSTRUCTION AND MANAGEMENT
REVIEWED FOR CODE COMPLIANCE
SIGNATURE: Ernie Gelfe
DATE: 08-05-2014

STATE OF UTAH #134096 MEHRDAD SAMIE LICENSED ARCHITECT
04-28-2014
ARCHITECT-ENGINEER STAMP

Unified State Laboratory Module 2

4451 South 2700 West, Taylorsville, UT 84118

DFCM #: 13020300
Project #: B13-024

DATE:	ISSUE TYPE:
APRIL 21, 2014	BID SET

CHECKED BY	J. NIELSEN
DRAWN BY	F. PITORE

LEVEL 2 AREA B FINISH PLAN

AE106B
VOLUME 1

C:\Users\fernando\Documents_A_13024_Modl_2013_fernando.rvt
7/14/2014 12:24:12 PM

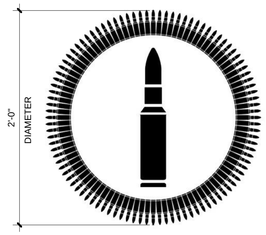

LOGO TO BE INSTALLED IN RESILIENT FLOORING BY FLOORING CONTRACTOR USING WATERJET METHOD.

IMAGE L

D1 / AE106C

1 1/2" = 1'-0"

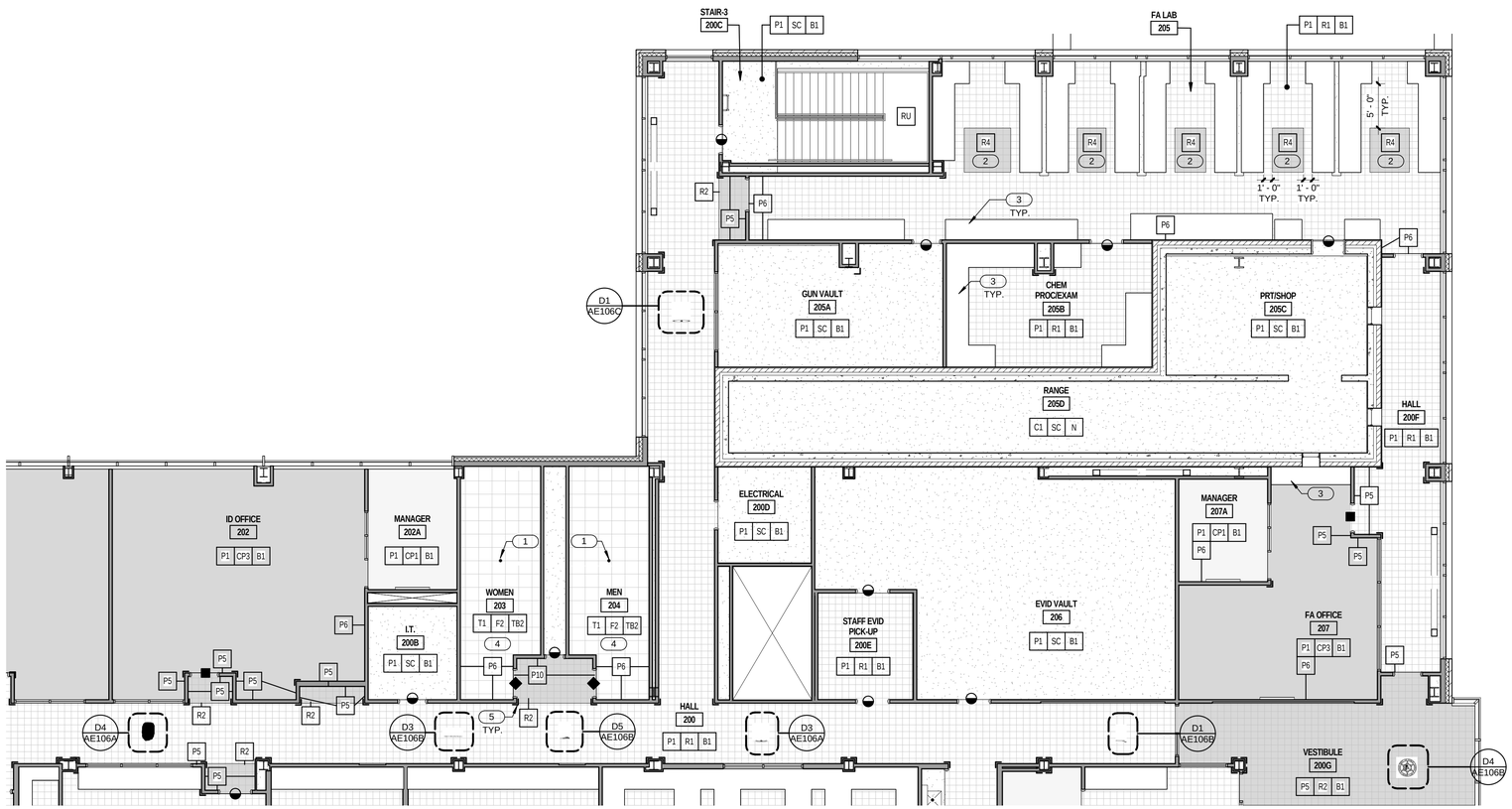

LEVEL 2 AREA C FINISH PLAN

A4 / AE106C

1/8" = 1'-0"

N

GENERAL NOTES

- GENERAL CONTRACTOR SHALL FIELD VERIFY ALL CONDITIONS AND SHALL REPORT TO THE ARCHITECT ANY UNKNOWN CONDITIONS, ERRORS OR CONFLICTS IN THE DRAWINGS BEFORE BEGINNING WORK.
- DO NOT SCALE DRAWINGS.

CARPET

ENTRY MAT

SEALED CONCRETE

TILE 1

TILE 2

EPOXY TERRAZZO FLOORING

RESILIENT FLOORING
ACCENT COLOR — A

STAINLESS STEEL CORNER GUARD — L

MARBLE THRESHOLD, SEE DETAIL D5/AE560

ALUMINUM THRESHOLD, SEE DETAIL D4/AE560

ALUMINUM TRANSITION STRIP, SEE DETAIL D3/AE560

VINYL TRANSITION STRIP, SEE DETAIL D2/AE560

FINISH KEY LEGEND — WALL FINISH W, FLOOR FINISH F, BASE FINISH B

BUMPER GUARD, SEE DETAIL D4/AE520

KEYED NOTES

1. FLOOR DRAIN. SLOPE FLOOR TO DRAIN AS SHOWN. SEE PLUMBING DRAWINGS.
2. RESILIENT FLOORING ACCENT TO ALIGN WITH CASEWORK U.NO. COORDINATE WITH LAB DRAWINGS.
3. CASEWORK, COORDINATE WITH LAB DRAWINGS.
4. SEE C5/AE560 FOR FLOOR PATTERN.
5. STAINLESS STEEL CORNER GUARD. SEE SPECS.

KEY PLAN

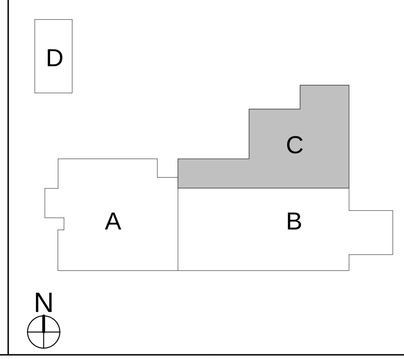

CRSA
649 E. South Temple
Salt Lake City, UT 84102
801.355.5915

MWL
11798 N. Lakeridge Pkwy.
Ashland, VA 23005
804-228-7473

State of Utah
Department of Administrative Services
DFCM
Division of Facilities Construction & Management
4110 State Office Building
Salt Lake City, Utah 84114
Phone: (801) 538 - 3018
Fax: (801) 538 - 3267

DIVISION OF FACILITIES CONSTRUCTION AND MANAGEMENT
REVIEWED FOR CODE COMPLIANCE
SIGNATURE: Ernie Calle
DATE: 08-05-2014

STATE OF UTAH
#134096
MEHRDAD SAMIE
LICENSED ARCHITECT
04-28-2014
ARCHITECT-ENGINEER STAMP

Unified State Laboratory Module 2

4451 South 2700 West, Taylorsville, UT 84118

DFCM #: 13020300

Project #: B13-024

DATE:	ISSUE TYPE:
APRIL 21, 2014	BID SET

CHECKED BY	Checker
DRAWN BY	F. PITORE

LEVEL 2 AREA C FINISH PLAN

AE106C

VOLUME 1

C:\Users\fernando\Documents_A_13024_Modil_2013_fernando.rvt
7/14/2014 12:24:22 PM

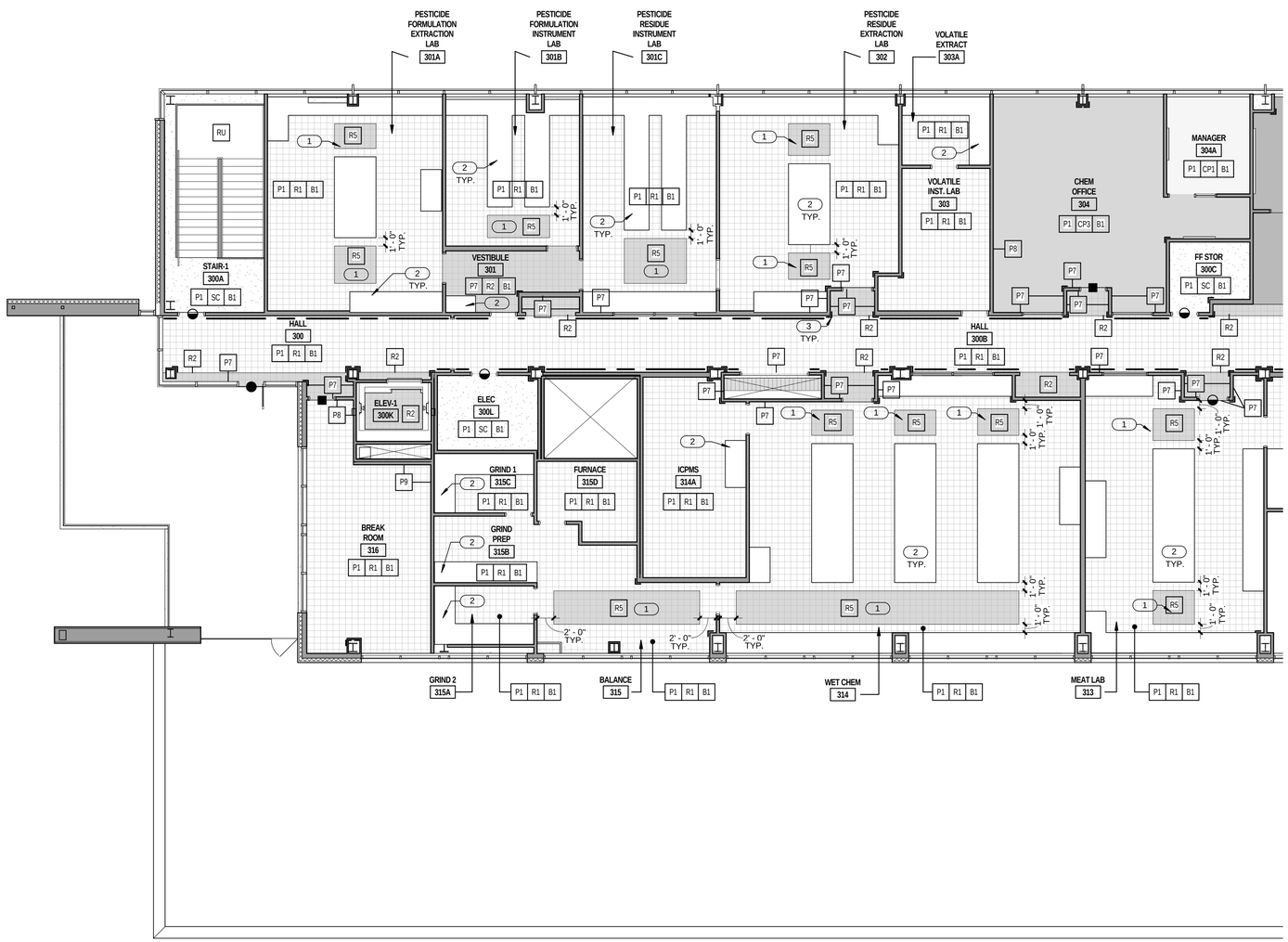

LEVEL 3 AREA A FINISH PLAN

1/8" = 1'-0"

A4 AE107A

N

GENERAL NOTES

- GENERAL CONTRACTOR SHALL FIELD VERIFY ALL CONDITIONS AND SHALL REPORT TO THE ARCHITECT ANY UNKNOWN CONDITIONS, ERRORS OR CONFLICTS IN THE DRAWINGS BEFORE BEGINNING WORK.
- DO NOT SCALE DRAWINGS.

CARPET

ENTRY MAT

SEALED CONCRETE

TILE 1

TILE 2

EPOXY TERRAZZO FLOORING

RESILIENT FLOORING
ACCENT COLOR — A

STAINLESS STEEL CORNER GUARD

MARBLE THRESHOLD, SEE DETAIL D5/AE560

ALUMINUM THRESHOLD, SEE DETAIL D4/AE560

ALUMINUM TRANSITION STRIP, SEE DETAIL D3/AE560

VINYL TRANSITION STRIP, SEE DETAIL D2/AE560

FINISH KEY LEGEND — WALL FINISH: W; FLOOR FINISH: F; BASE FINISH: B

BUMPER GUARD, SEE DETAIL D4/AE520

KEYED NOTES

1 RESILIENT FLOORING ACCENT TO ALIGN WITH CASEWORK U.NO. COORDINATE WITH LAB DRAWINGS.
2 CASEWORK, COORDINATE WITH LAB DRAWINGS.
3 STAINLESS STEEL CORNER GUARD. SEE SPECS.

KEY PLAN

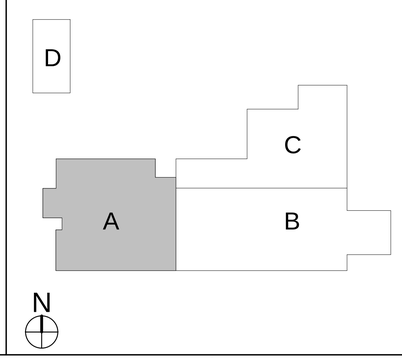

CRSA
649 E. South Temple
Salt Lake City, UT 84102
801.355.5915

MWL
11798 N. Lakeridge Pkwy.
Ashland, VA 23005
804-228-7473

State of Utah
Department of Administrative Services
Division of Facilities Construction & Management
4110 State Office Building
Salt Lake City, Utah 84114
Phone: (801) 538 - 3018
Fax: (801) 538 - 3267

DIVISION OF FACILITIES CONSTRUCTION AND MANAGEMENT
REVIEWED FOR CODE COMPLIANCE
SIGNATURE: Ernie Calle
DATE: 08-05-2014

STATE OF UTAH #134096 MEHRDAD SAMIE LICENSED ARCHITECT
04-28-2014
ARCHITECT-ENGINEER STAMP

Unified State Laboratory Module 2

4451 South 2700 West, Taylorsville, UT 84118

DFCM #: 13020300

Project #: B13-024

DATE:	ISSUE TYPE:
APRIL 21, 2014	BID SET

CHECKED BY: J. NIELSEN
DRAWN BY: F. PITORE

LEVEL 3 AREA A FINISH PLAN

AE107A

VOLUME 1

C:\Users\fernando\Documents_A_13024_Modil_2013_fernando.rvt
7/14/2014 12:24:31 PM

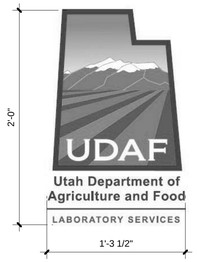

LOGO TO BE INSTALLED IN RESILIENT FLOORING BY FLOORING CONTRACTOR USING WATERJET METHOD.

IMAGE K (D1 / AE107B)

1 1/2" = 1'-0"

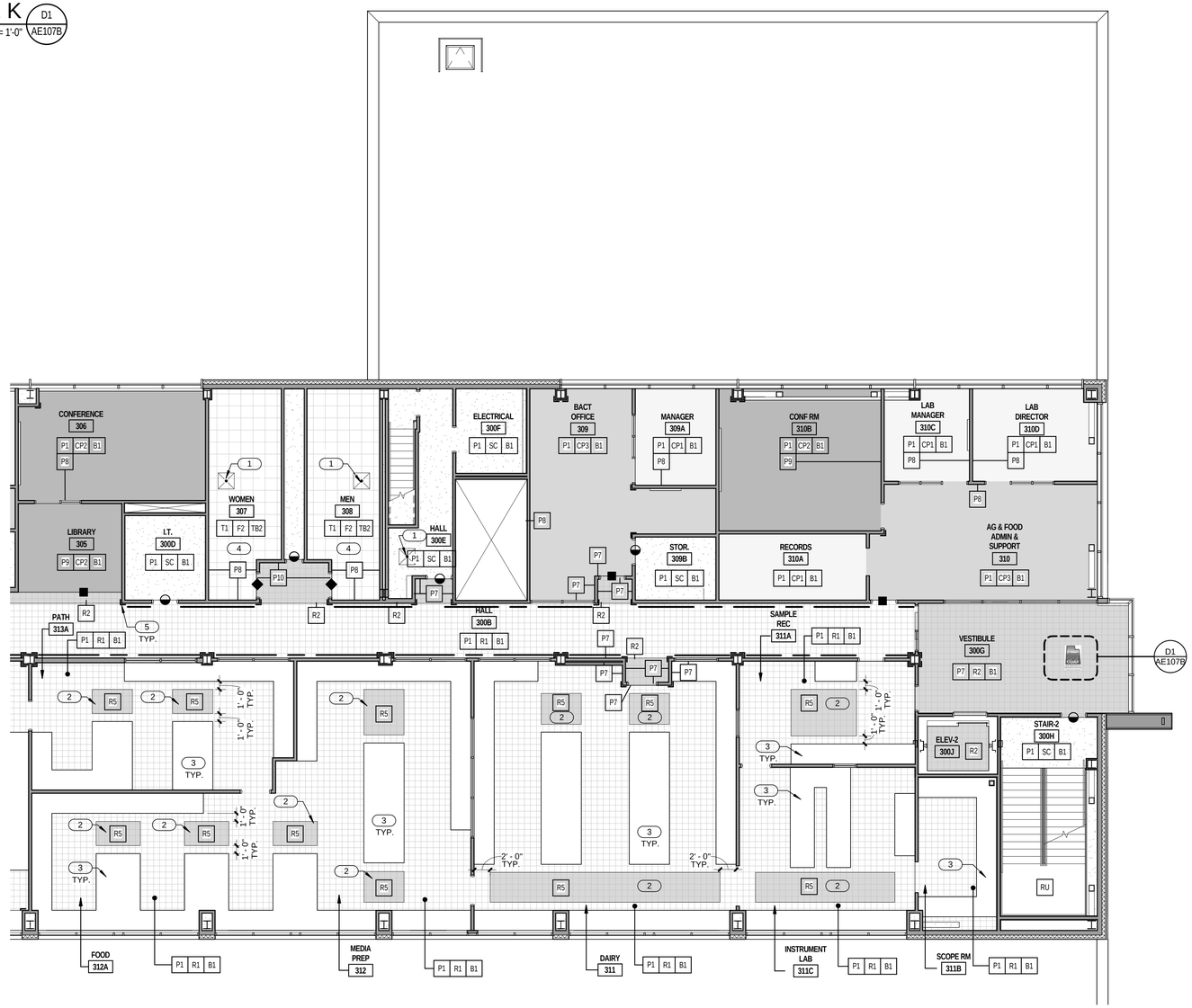

LEVEL 3 AREA B FINISH PLAN (A4 / AE107B)

1/8" = 1'-0"

GENERAL NOTES

- GENERAL CONTRACTOR SHALL FIELD VERIFY ALL CONDITIONS AND SHALL REPORT TO THE ARCHITECT ANY UNKNOWN CONDITIONS, ERRORS OR CONFLICTS IN THE DRAWINGS BEFORE BEGINNING WORK.
- DO NOT SCALE DRAWINGS.

CARPET

ENTRY MAT

SEALED CONCRETE

TILE 1

TILE 2

EPOXY TERRAZZO FLOORING

RESILIENT FLOORING
ACCENT COLOR — A

STAINLESS STEEL CORNER GUARD — L

MARBLE THRESHOLD, SEE DETAIL D5/AE560

ALUMINUM THRESHOLD, SEE DETAIL D4/AE560

ALUMINUM TRANSITION STRIP, SEE DETAIL D3/AE560

VINYL TRANSITION STRIP, SEE DETAIL D2/AE560

FINISH KEY LEGEND — W | F | B
WALL FINISH
FLOOR FINISH
BASE FINISH

BUMPER GUARD, SEE DETAIL D4/AE520

KEYED NOTES

1. FLOOR DRAIN. SLOPE FLOOR TO DRAIN AS SHOWN. SEE PLUMBING DRAWINGS.
2. RESILIENT FLOORING ACCENT TO ALIGN WITH CASEWORK U.NO. COORDINATE WITH LAB DRAWINGS.
3. CASEWORK, COORDINATE WITH LAB DRAWINGS.
4. SEE C5/AE560 FOR FLOOR PATTERN.
5. STAINLESS STEEL CORNER GUARD. SEE SPECS.

KEY PLAN

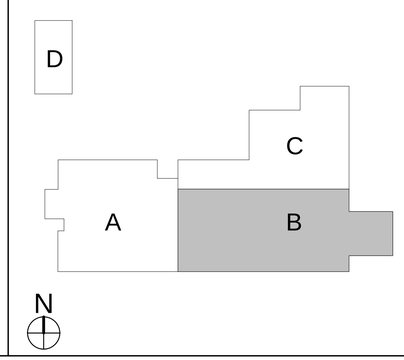

CRSA
649 E. South Temple
Salt Lake City, UT 84102
801.355.5915

MWL
11798 N. Lakeridge Pkwy.
Ashland, VA 23005
804-228-7473

State of Utah
Department of Administrative Services
DFCM
Division of Facilities Construction & Management
4110 State Office Building
Salt Lake City, Utah 84114
Phone: (801) 538 - 3018
Fax: (801) 538 - 3267

DIVISION OF FACILITIES CONSTRUCTION AND MANAGEMENT
REVIEWED FOR CODE COMPLIANCE
SIGNATURE: Ernie Ralph
DATE: 08-05-2014

STATE OF UTAH #134098 MEHRDAD SAMIE LICENSED ARCHITECT
04.28.2014
ARCHITECT-ENGINEER STAMP

Unified State Laboratory Module 2

4451 South 2700 West, Taylorsville, UT 84118

DFCM #:	13020300
Project #:	B13-024

DATE:	ISSUE TYPE:
APRIL 21, 2014	BID SET

CHECKED BY	J. NIELSEN
DRAWN BY	F. PITORE

LEVEL 3 AREA B FINISH PLAN

AE107B

VOLUME 1

C:\Users\fernando\Documents_A_13024_Modli_2013_fernando.rvt
7/14/2014 12:24:40 PM

KEYED NOTES

1. 6" CONCRETE HOUSEKEEPING PAD. COORDINATE SIZE & PLACEMENT WITH MECHANICAL EQUIPMENT. SEE FINISH SCHEDULE.
2. 6"X6" CONCRETE CURB
3. BRACE FRAME. PAINT WHERE EXPOSED. SEE STRUCTURAL.

GENERAL NOTES

- GENERAL CONTRACTOR SHALL FIELD VERIFY ALL CONDITIONS AND SHALL REPORT TO THE ARCHITECT ANY UNKNOWN CONDITIONS, ERRORS OR CONFLICTS IN THE DRAWINGS BEFORE BEGINNING WORK.
- DO NOT SCALE DRAWINGS.

CARPET

ENTRY MAT

SEALED CONCRETE

TILE 1

TILE 2

EPOXY TERRAZZO FLOORING

RESILIENT FLOORING
ACCENT COLOR — A

STAINLESS STEEL CORNER GUARD — L

MARBLE THRESHOLD, SEE DETAIL D5/AE560

ALUMINUM THRESHOLD, SEE DETAIL D4/AE560

ALUMINUM TRANSITION STRIP, SEE DETAIL D3/AE560

VINYL TRANSITION STRIP, SEE DETAIL D2/AE560

FINISH KEY LEGEND — W F B
WALL FINISH
FLOOR FINISH
BASE FINISH

BUMPER GUARD, SEE DETAIL D4/AE520

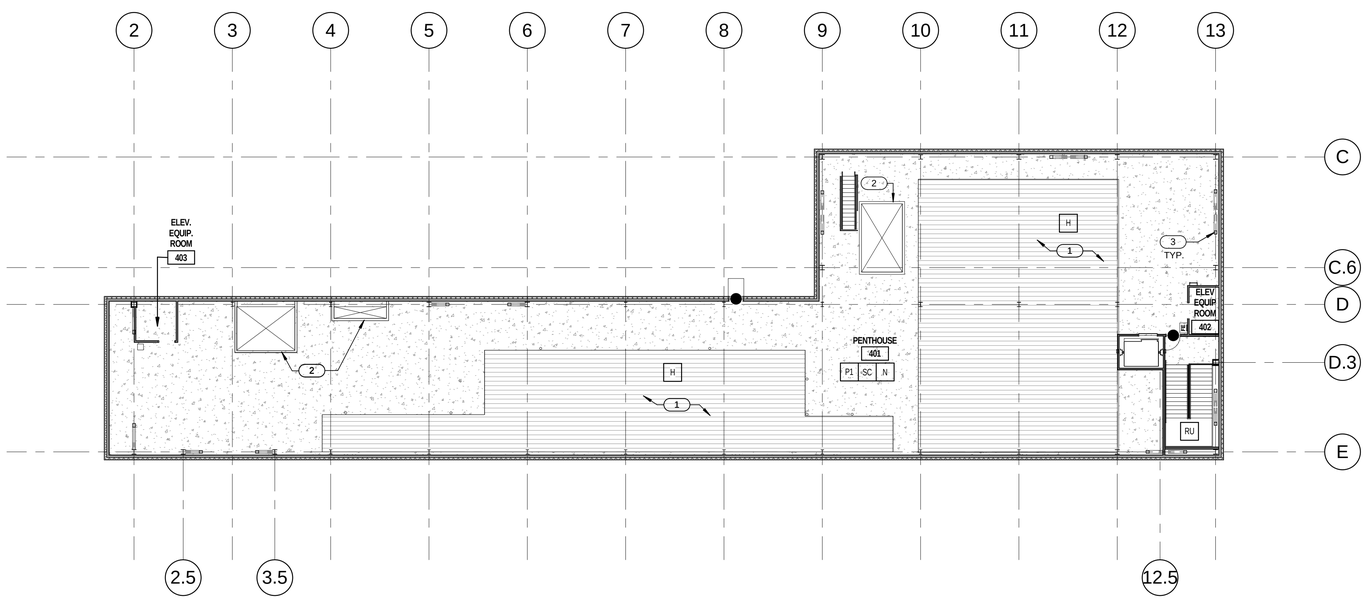

PENTHOUSE LEVEL FINISH PLAN
1/16" = 1'-0"
A5
AE108
N

CRSA
649 E. South Temple
Salt Lake City, UT 84102
801.355.5915

MWL
11798 N. Lakeridge Pkwy.
Ashland, VA 23005
804-228-7473

State of Utah
Department of Administrative Services
Division of Facilities Construction & Management
4110 State Office Building
Salt Lake City, Utah 84114
Phone: (801) 538 - 3018
Fax: (801) 538 - 3267

DIVISION OF FACILITIES CONSTRUCTION AND MANAGEMENT
REVIEWED FOR CODE COMPLIANCE
SIGNATURE:
DATE: 08-05-2014

STATE OF UTAH
#134096
MEHRDAD SAMIE
LICENSED ARCHITECT
04-28-2014
ARCHITECT-ENGINEER STAMP

Unified State Laboratory Module 2

4451 South 2700 West, Taylorsville, UT 84118

DFCM #: 13020300
Project #: B13-024

DATE:	ISSUE TYPE:
APRIL 21, 2014	BID SET

CHECKED BY	J. NIELSEN
DRAWN BY	F. PITORE

PENTHOUSE LEVEL FINISH PLAN

AE108

VOLUME 1

C:\Users\fernando\Documents_A_13024_Modil_2013_fernando.rvt
7/14/2014 12:24:48 PM

KEYED NOTES

1. EXPOSED STRUCTURE.
2. SUNSHADE.
3. ROLLER WINDOW SHADES TYP. ALL EXTERIOR WINDOWS. REFER TO ACCESSORY SCHEDULE. SEE SPECS.

GENERAL NOTES

- GENERAL CONTRACTOR SHALL FIELD VERIFY ALL CONDITIONS AND SHALL REPORT TO THE ARCHITECT ANY UNKNOWN CONDITIONS, ERRORS OR CONFLICTS IN THE DRAWINGS BEFORE BEGINNING WORK.
- DO NOT SCALE DRAWINGS.

METAL SOFFIT PANEL

ACOUSTICAL CEILING TILE 24" X 24"

GYPSUM BOARD. PAINT.

1HR FIRE RATED BOTTOM OF SHAFT AT 10'-0" A.F.F. U.N.O. PER DETAIL C5 / AE530

RADIANT CEILING PANEL @ 10'- 0" A.F.F U.N.O.

SUPPLY OR RETURN GRILLE. SEE MECHANICAL

LAY-IN MOUNTED LIGHT FIXUTRE. SEE ELECTRICAL

RECESSED LIGHT FIXTURE. SEE ELECTRICAL.

SURFACE MOUNTED LIGHT FIXTURE. SEE ELECTRICAL.

PROJECTOR SCREEN

SPEAKER

SMOKE DETECTOR

HORN STROBE

CEILING MOUNTED FAN COIL

PROJECTOR

MOTION SENSOR

CAMERA

CEILING ACCESS PANEL

STROBE

DROPCORD

ROLLER SHADE. SEE ACCESSORY SCHEDULE

FUME HOOD

UMBILICAL SERVICE CHASE

PHOTOCELL

KEY PLAN

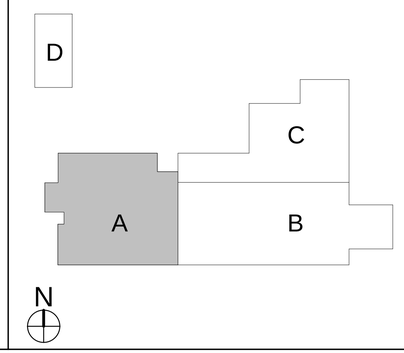

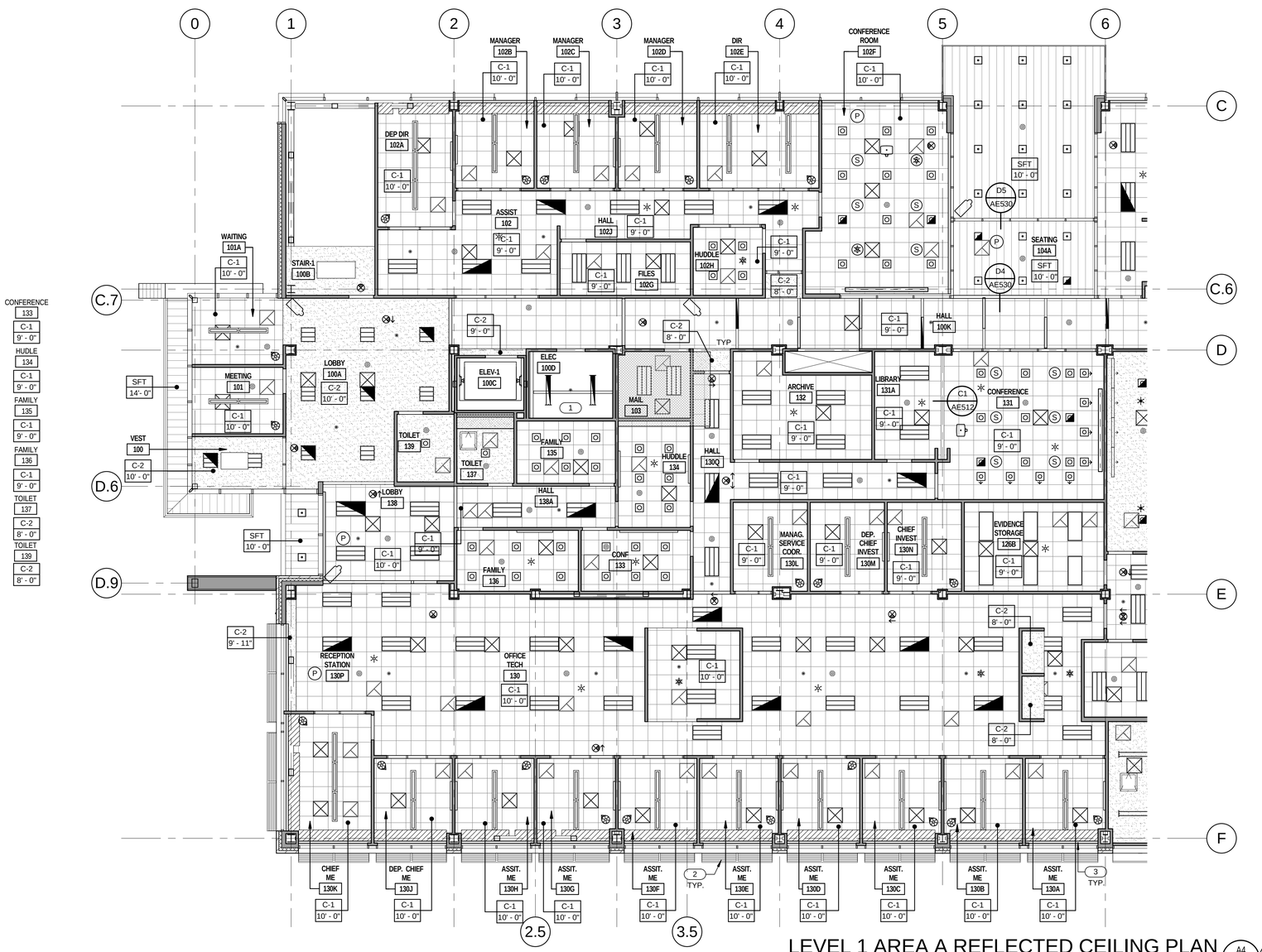

LEVEL 1 AREA A REFLECTED CEILING PLAN

1/8" = 1'-0"

A4 AE109A

CRSA

649 E. South Temple
Salt Lake City, UT 84102
801.355.5915

MWL

11798 N. Lakeridge Pkwy.
Ashland, VA 23005
804-228-7473

State of Utah
Department of Administrative Services

Division of Facilities Construction & Management
4110 State Office Building
Salt Lake City, Utah 84114
Phone: (801) 538 - 3018
Fax: (801) 538 - 3267

DIVISION OF FACILITIES CONSTRUCTION AND MANAGEMENT
REVIEWED FOR CODE COMPLIANCE
SIGNATURE: Ernie Gelfe
DATE: 08-05-2014

STATE OF UTAH #134096 MEHRDAD SAMIE LICENSED ARCHITECT
04-28-2014
ARCHITECT-ENGINEER STAMP

Unified State Laboratory Module 2

4451 South 2700 West, Taylorsville, UT 84118

DFCM #: 13020300

Project #: B13-024

DATE:	ISSUE TYPE:
APRIL 21, 2014	BID SET

CHECKED BY: J. NIELSEN

DRAWN BY: F. PITORE

LEVEL 1 AREA A REFLECTED CEILING PLAN

AE109A

VOLUME 1

C:\Users\fernando\Documents_A_13024_Modl_2013_fernando.rvt
7/14/2014 12:25:07 PM

KEYED NOTES

1. HOIST RAIL.
2. EXPOSED STRUCTURE. PAINT.
3. ALUM. STOREFRONT SYSTEM. SEE WINDOW TYPES.
4. SUNSHADE.
5. EXPOSED STRUCTURE.

GENERAL NOTES

- GENERAL CONTRACTOR SHALL FIELD VERIFY ALL CONDITIONS AND SHALL REPORT TO THE ARCHITECT ANY UNKNOWN CONDITIONS, ERRORS OR CONFLICTS IN THE DRAWINGS BEFORE BEGINNING WORK.
- DO NOT SCALE DRAWINGS.

METAL SOFFIT PANEL

ACOUSTICAL CEILING TILE 24" X 24"

GYPSUM BOARD. PAINT.

1HR FIRE RATED BOTTOM OF SHAFT AT 10'-0" A.F.F. U.N.O. PER DETAIL C5 / AE530

RADIANT CEILING PANEL @ 10'- 0" A.F.F U.N.O.

SUPPLY OR RETURN GRILLE. SEE MECHANICAL

LAY-IN MOUNTED LIGHT FIXUTRE. SEE ELECTRICAL

RECESSED LIGHT FIXTURE. SEE ELECTRICAL.

SURFACE MOUNTED LIGHT FIXTURE. SEE ELECTRICAL.

PROJECTOR SCREEN

SPEAKER

SMOKE DETECTOR

HORN STROBE

CEILING MOUNTED FAN COIL

PROJECTOR

MOTION SENSOR

CAMERA

CEILING ACCESS PANEL

STROBE

DROPCORD

ROLLER SHADE. SEE ACCESSORY SCHEDULE

FUME HOOD

UMBILICAL SERVICE CHASE

PHOTOCELL

KEY PLAN

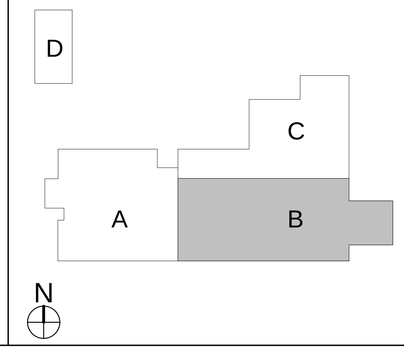

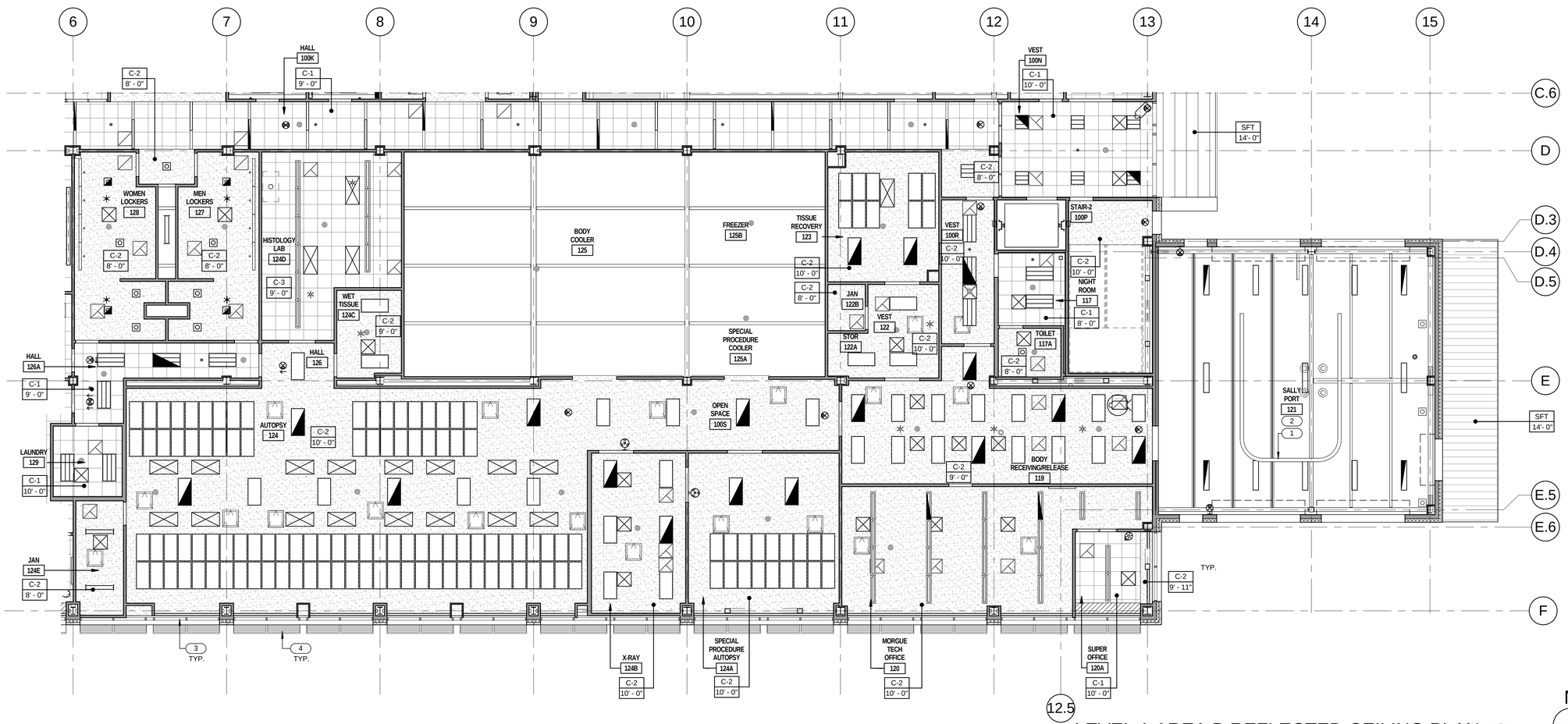

LEVEL 1 AREA B REFLECTED CEILING PLAN (A5 / AE109B)

1/8" = 1'-0"

CRSA
649 E. South Temple
Salt Lake City, UT 84102
801.355.5915

MWL
11798 N. Lakeridge Pkwy.
Ashland, VA 23005
804-228-7473

State of Utah
Department of Administrative Services
Division of Facilities Construction & Management
4110 State Office Building
Salt Lake City, Utah 84114
Phone: (801) 538 - 3018
Fax: (801) 538 - 3267

DIVISION OF FACILITIES CONSTRUCTION AND MANAGEMENT
REVIEWED FOR CODE COMPLIANCE
SIGNATURE:
DATE: 08-05-2014

STATE OF UTAH #134096 MEHRDAD SAMII LICENSED ARCHITECT
04-28-2014
ARCHITECT-ENGINEER STAMP

Unified State Laboratory Module 2

4451 South 2700 West, Taylorsville, UT 84118

DFCM #: 13020300

Project #: B13-024

DATE:	ISSUE TYPE:
APRIL 21, 2014	BID SET

CHECKED BY: J. NIELSEN

DRAWN BY: F. PITORE

LEVEL 1 AREA B REFLECTED CEILING PLAN

AE109B

VOLUME 1

C:\Users\fernando\Documents_A_13024_Modli_2013_fernando.rvt
7/14/2014 12:25:29 PM

KEYED NOTES

1 EXPOSED STRUCTURE. PAINT.
2 EXPOSED STRUCTURE.
3 OVERHEAD ROLLING DOOR. SEE DOOR SCHEDULE.

GENERAL NOTES

- GENERAL CONTRACTOR SHALL FIELD VERIFY ALL CONDITIONS AND SHALL REPORT TO THE ARCHITECT ANY UNKNOWN CONDITIONS, ERRORS OR CONFLICTS IN THE DRAWINGS BEFORE BEGINNING WORK.
- DO NOT SCALE DRAWINGS.

METAL SOFFIT PANEL

ACOUSTICAL CEILING TILE 24" X 24"

GYPSUM BOARD. PAINT.

1HR FIRE RATED BOTTOM OF SHAFT AT 10'-0" A.F.F. U.N.O. PER DETAIL C5 / AE530

RADIANT CEILING PANEL @ 10'- 0" A.F.F U.N.O.

SUPPLY OR RETURN GRILLE. SEE MECHANICAL

LAY-IN MOUNTED LIGHT FIXUTRE. SEE ELECTRICAL

RECESSED LIGHT FIXTURE. SEE ELECTRICAL.

SURFACE MOUNTED LIGHT FIXTURE. SEE ELECTRICAL.

PROJECTOR SCREEN

SPEAKER

SMOKE DETECTOR

HORN STROBE

CEILING MOUNTED FAN COIL

PROJECTOR

MOTION SENSOR

CAMERA

CEILING ACCESS PANEL

STROBE

DROPCORD

ROLLER SHADE. SEE ACCESSORY SCHEDULE

FUME HOOD

UMBILICAL SERVICE CHASE

PHOTOCELL

KEY PLAN

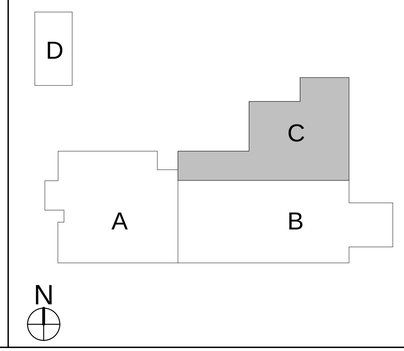

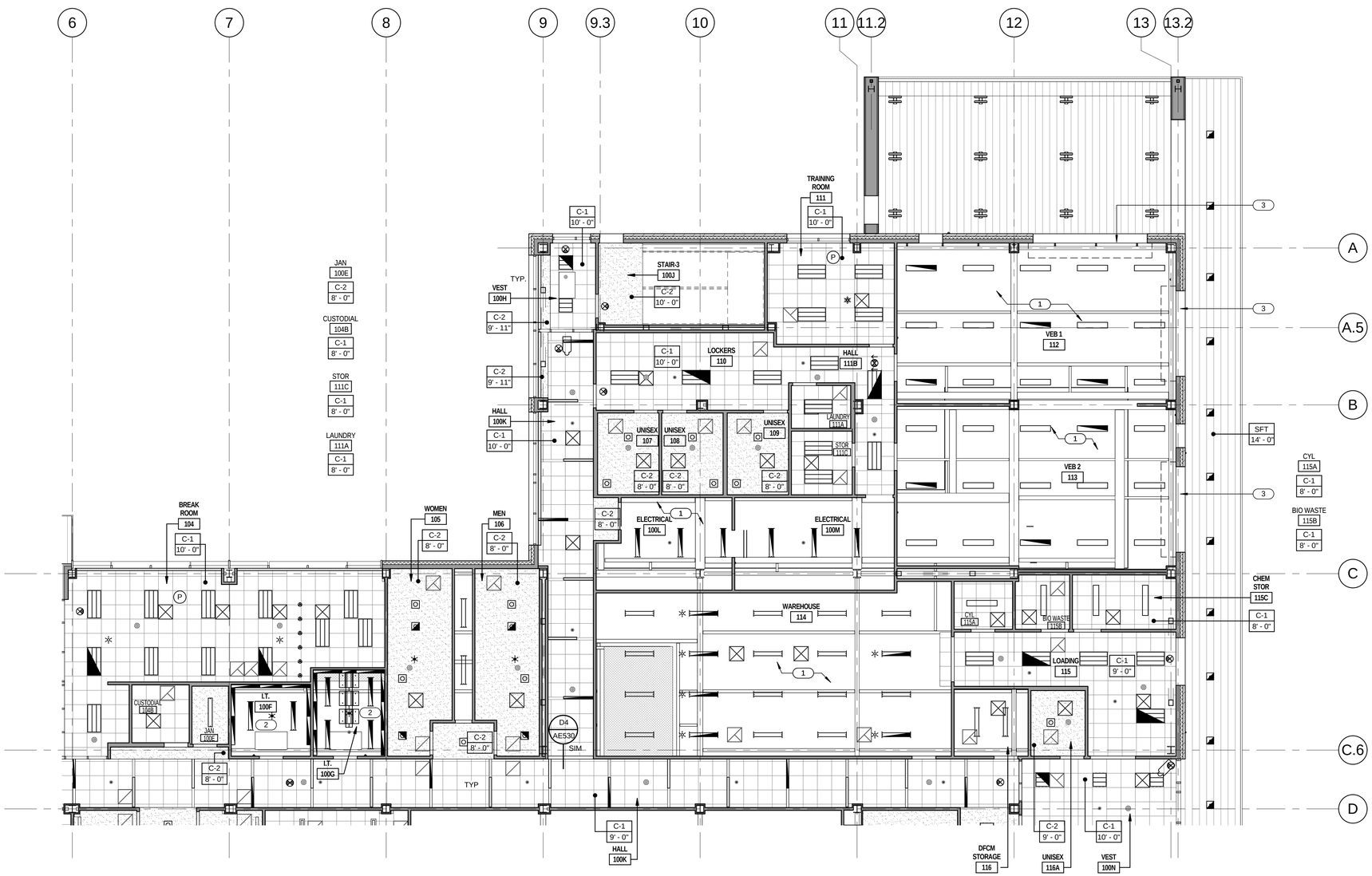

LEVEL 1 AREA C REFLECTED CEILING PLAN

1/8" = 1'-0"

A5 / AE109C

N

CRSA
649 E. South Temple
Salt Lake City, UT 84102
801.355.5915

MWL
11798 N. Lakeridge Pkwy.
Ashland, VA 23005
804-228-7473

State of Utah
Department of Administrative Services
Division of Facilities Construction & Management
4110 State Office Building
Salt Lake City, Utah 84114
Phone: (801) 538 - 3018
Fax: (801) 538 - 3267

DIVISION OF FACILITIES CONSTRUCTION AND MANAGEMENT
REVIEWED FOR CODE COMPLIANCE
SIGNATURE: Ernie Calfe
DATE: 08-05-2014

STATE OF UTAH
#134096
MEHRDAD SAMIE
LICENSED ARCHITECT
04-28-2014
ARCHITECT-ENGINEER STAMP

Unified State Laboratory Module 2

4451 South 2700 West, Taylorsville, UT 84118

DFCM #: 13020300

Project #: B13-024

DATE:	ISSUE TYPE:
APRIL 21, 2014	BID SET

CHECKED BY: J. NIELSEN

DRAWN BY: F. PITORE

LEVEL 1 AREA C REFLECTED CEILING PLAN

AE109C

VOLUME 1

C:\Users\fernando\Documents_A_13024_Modli_2013_fernando.rvt
7/14/2014 12:25:46 PM

KEYED NOTES

1 EXPOSED STRUCTURE. PAINT.

GENERAL NOTES

- GENERAL CONTRACTOR SHALL FIELD VERIFY ALL CONDITIONS AND SHALL REPORT TO THE ARCHITECT ANY UNKNOWN CONDITIONS, ERRORS OR CONFLICTS IN THE DRAWINGS BEFORE BEGINNING WORK.
- DO NOT SCALE DRAWINGS.

METAL SOFFIT PANEL

ACOUSTICAL CEILING TILE 24" X 24"

GYPSUM BOARD. PAINT.

1HR FIRE RATED BOTTOM OF SHAFT AT 10'-0" A.F.F. U.N.O. PER DETAIL C5 / AE530

RADIANT CEILING PANEL @ 10'- 0" A.F.F U.N.O.

SUPPLY OR RETURN GRILLE. SEE MECHANICAL

LAY-IN MOUNTED LIGHT FIXUTRE. SEE ELECTRICAL

RECESSED LIGHT FIXTURE. SEE ELECTRICAL.

SURFACE MOUNTED LIGHT FIXTURE. SEE ELECTRICAL.

PROJECTOR SCREEN

SPEAKER

SMOKE DETECTOR

HORN STROBE

CEILING MOUNTED FAN COIL

PROJECTOR

MOTION SENSOR

CAMERA

CEILING ACCESS PANEL

STROBE

DROPCORD

ROLLER SHADE. SEE ACCESSORY SCHEDULE

FUME HOOD

UMBILICAL SERVICE CHASE

PHOTOCELL

KEY PLAN

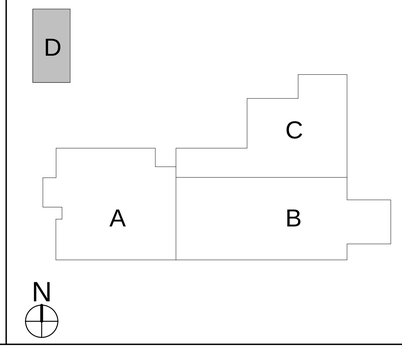

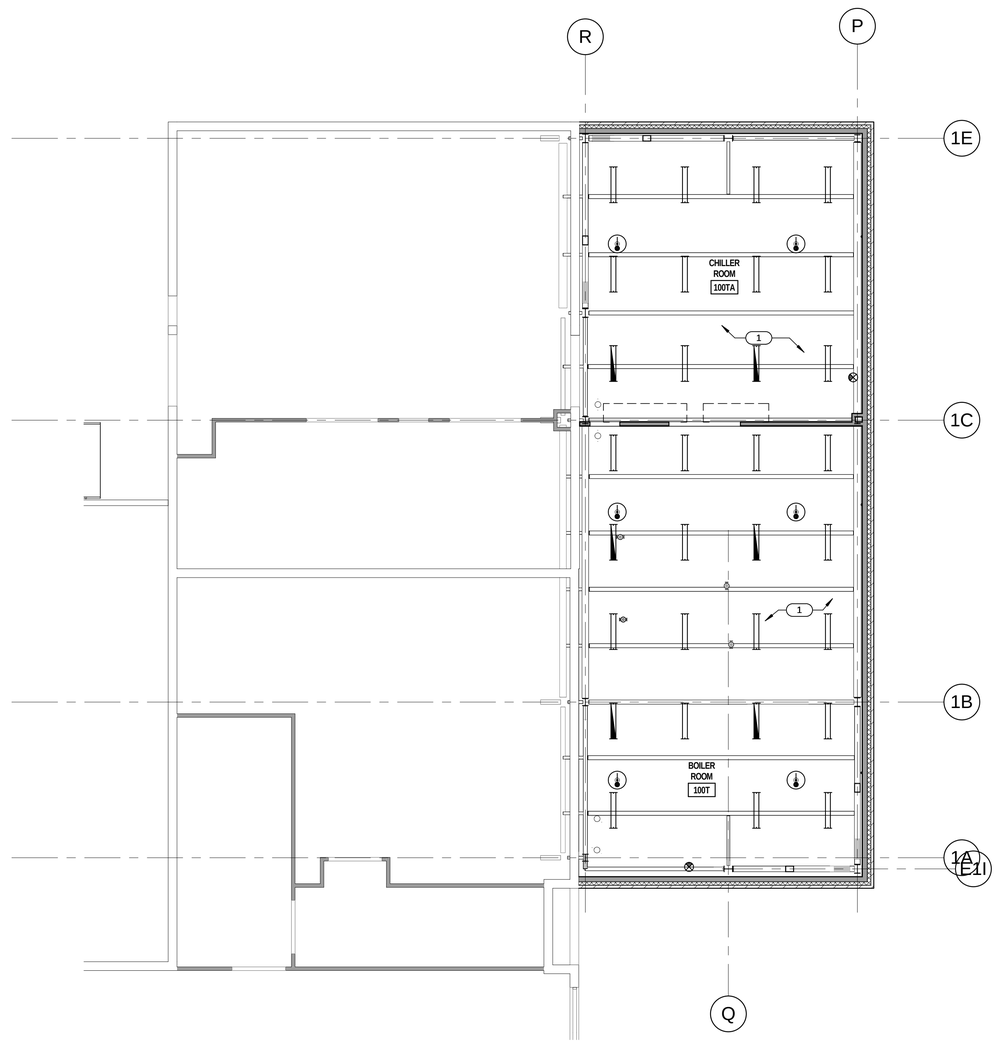

LEVEL 1 AREA D REFLECTED CEILING PLAN

1/8" = 1'-0"

A4 / AE109D

N

CRSA

649 E. South Temple
Salt Lake City, UT 84102
801.355.5915

MWL

11798 N. Lakeridge Pkwy.
Ashland, VA 23005
804-228-7473

State of Utah
Department of Administrative Services

Division of Facilities Construction & Management
4110 State Office Building
Salt Lake City, Utah 84114
Phone: (801) 538 - 3018
Fax: (801) 538 - 3267

DIVISION OF FACILITIES CONSTRUCTION AND MANAGEMENT
REVIEWED FOR CODE COMPLIANCE
SIGNATURE: Ernie Calle
DATE: 08-05-2014

STATE OF UTAH #134096 MEHRDAD SAMIE LICENSED ARCHITECT
04.28.2014
ARCHITECT-ENGINEER STAMP

Unified State Laboratory Module 2

4451 South 2700 West, Taylorsville, UT 84118

DFCM #: 13020300

Project #: B13-024

DATE:	ISSUE TYPE:
APRIL 21, 2014	BID SET
CHECKED BY	J. NIELSEN
DRAWN BY	F. PITORE

LEVEL 1 AREA D REFLECTED CEILING PLAN

AE109D

VOLUME 1

C:\Users\fernando\Documents_A_13024_Modli_2013_fernando.rvt
7/14/2014 12:25:58 PM

KEYED NOTES

1 EXPOSED STRUCTURE.
2 SUNSHADE.

GENERAL NOTES

METAL SOFFIT PANEL

ACOUSTICAL CEILING TILE 24" X 24"

GYPSUM BOARD. PAINT.

1HR FIRE RATED BOTTOM OF SHAFT AT 10'-0" A.F.F. U.N.O. PER DETAIL C5 / AE530

RADIANT CEILING PANEL @ 10'- 0" A.F.F U.N.O.

SUPPLY OR RETURN GRILLE. SEE MECHANICAL

LAY-IN MOUNTED LIGHT FIXUTRE. SEE ELECTRICAL

RECESSED LIGHT FIXTURE. SEE ELECTRICAL.

SURFACE MOUNTED LIGHT FIXTURE. SEE ELECTRICAL.

PROJECTOR SCREEN

SPEAKER

SMOKE DETECTOR

HORN STROBE

CEILING MOUNTED FAN COIL

PROJECTOR

MOTION SENSOR

CAMERA

CEILING ACCESS PANEL

STROBE

DROPCORD

ROLLER SHADE. SEE ACCESSORY SCHEDULE

FUME HOOD

UMBILICAL SERVICE CHASE

PHOTOCELL

KEY PLAN

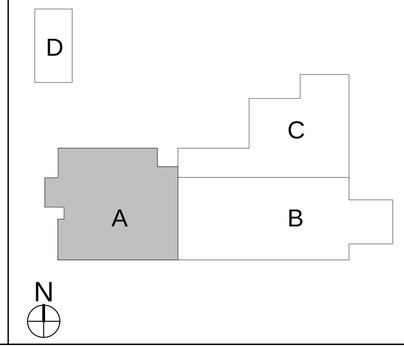

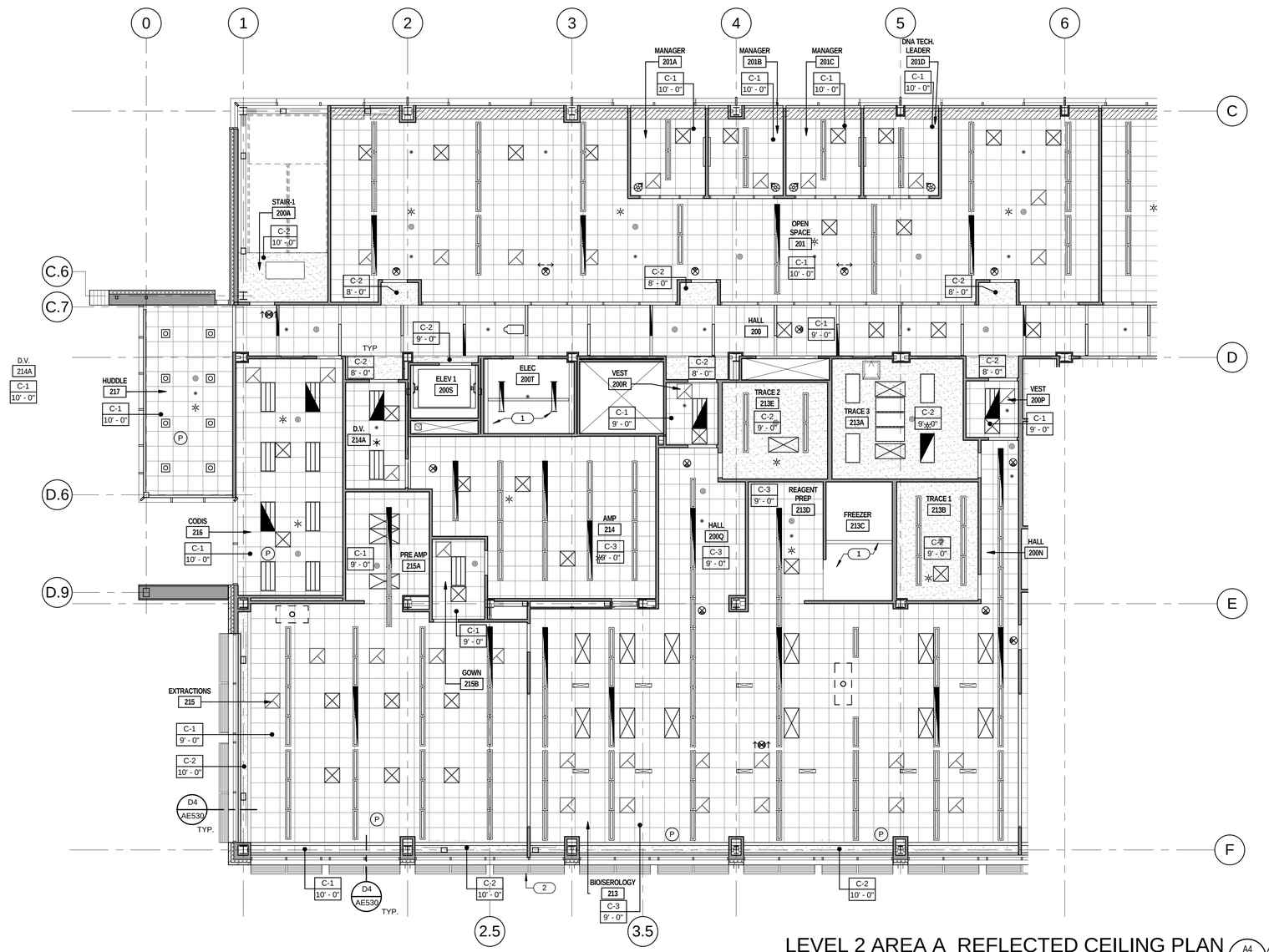

LEVEL 2 AREA A REFLECTED CEILING PLAN

1/8" = 1'-0"

A4 AE110A

N

CRSA
649 E. South Temple
Salt Lake City, UT 84102
801.355.5915

MWL
11798 N. Lakeridge Pkwy.
Ashland, VA 23005
804-228-7473

State of Utah
Department of Administrative Services
DFCM
Division of Facilities Construction & Management
4110 State Office Building
Salt Lake City, Utah 84114
Phone: (801) 538 - 3018
Fax: (801) 538 - 3267

DIVISION OF FACILITIES CONSTRUCTION AND MANAGEMENT
REVIEWED FOR CODE COMPLIANCE
SIGNATURE: Ernie Gelfe
DATE: 08-05-2014

STATE OF UTAH #134096 MEHRDAD SAMIE LICENSED ARCHITECT
04.28.2014
ARCHITECT-ENGINEER STAMP

Unified State Laboratory Module 2

4451 South 2700 West, Taylorsville, UT 84118

DFCM #: 13020300

Project #: B13-024

DATE:	ISSUE TYPE:
APRIL 21, 2014	BID SET

CHECKED BY: J. NIELSEN

DRAWN BY: F. PITORE

LEVEL 2 AREA A REFLECTED CEILING PLAN

AE110A

VOLUME 1

C:\Users\fernando\Documents_A_13024_Modll_2013_fernando.rvt
7/14/2014 12:26:16 PM

KEYED NOTES

1. EXPOSED STRUCTURE. PAINT.
2. SUNSHADE.
3. ROLLER WINDOW SHADES TYP. ALL EXTERIOR WINDOWS. REFER TO ACCESSORY SCHEDULE. SEE SPECS.

GENERAL NOTES

- GENERAL CONTRACTOR SHALL FIELD VERIFY ALL CONDITIONS AND SHALL REPORT TO THE ARCHITECT ANY UNKNOWN CONDITIONS, ERRORS OR CONFLICTS IN THE DRAWINGS BEFORE BEGINNING WORK.
- DO NOT SCALE DRAWINGS.

METAL SOFFIT PANEL

ACOUSTICAL CEILING TILE 24" X 24"

GYPSUM BOARD. PAINT.

1HR FIRE RATED BOTTOM OF SHAFT AT 10'-0" A.F.F. U.N.O. PER DETAIL C5 / AE530

RADIANT CEILING PANEL @ 10'- 0" A.F.F U.N.O.

SUPPLY OR RETURN GRILLE. SEE MECHANICAL

LAY-IN MOUNTED LIGHT FIXUTRE. SEE ELECTRICAL

RECESSED LIGHT FIXTURE. SEE ELECTRICAL.

SURFACE MOUNTED LIGHT FIXTURE. SEE ELECTRICAL.

PROJECTOR SCREEN

SPEAKER

SMOKE DETECTOR

HORN STROBE

CEILING MOUNTED FAN COIL

PROJECTOR

MOTION SENSOR

CAMERA

CEILING ACCESS PANEL

STROBE

DROPCORD

ROLLER SHADE. SEE ACCESSORY SCHEDULE

FUME HOOD

UMBILICAL SERVICE CHASE

PHOTOCELL

KEY PLAN

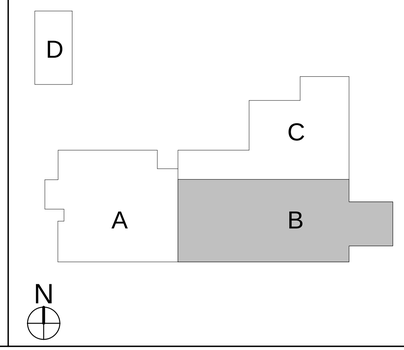

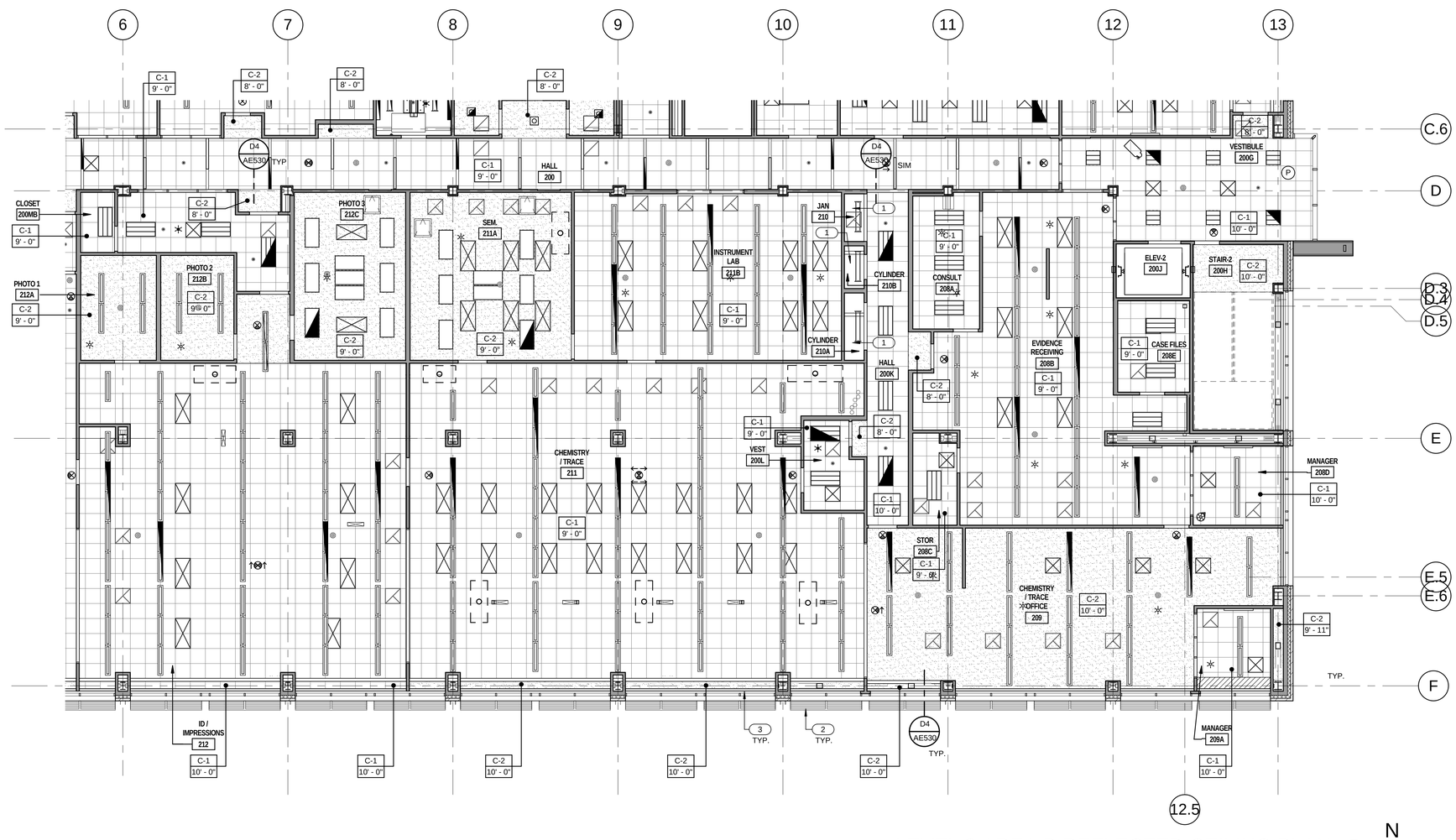

LEVEL 2 AREA B REFLECTED CEILING PLAN

1/8" = 1'-0" (A4 / AE110B)

CRSA
649 E. South Temple
Salt Lake City, UT 84102
801.355.5915

MWL
11798 N. Lakeridge Pkwy.
Ashland, VA 23005
804-228-7473

State of Utah
Department of Administrative Services
DFCM
Division of Facilities Construction & Management
4110 State Office Building
Salt Lake City, Utah 84114
Phone: (801) 538 - 3018
Fax: (801) 538 - 3267

DIVISION OF FACILITIES CONSTRUCTION AND MANAGEMENT
REVIEWED FOR CODE COMPLIANCE
SIGNATURE: Ernie Gelfe
DATE: 08-05-2014

STATE OF UTAH #134098 MEHRDAD SAMIE LICENSED ARCHITECT
04-28-2014
ARCHITECT-ENGINEER STAMP

Unified State Laboratory Module 2

4451 South 2700 West, Taylorsville, UT 84118

DFCM #:	13020300
Project #:	B13-024

DATE:	ISSUE TYPE:
APRIL 21, 2014	BID SET

CHECKED BY	J. NIELSEN
DRAWN BY	F. PITORE

LEVEL 2 AREA B REFLECTED CEILING PLAN

AE110B

VOLUME 1

C:\Users\fernando\Documents_A_13024_Modli_2013_fernando.rvt
7/14/2014 12:26:33 PM

KEYED NOTES

1. EXPOSED STRUCTURE. PAINT.
2. CUBICLE CURTAINS. SEE SPECIFICATIONS
3. ROLLER WINDOW SHADES TYP. ALL EXTERIOR WINDOWS. REFER TO ACCESSORY SCHEDULE. SEE SPECS.

GENERAL NOTES

- GENERAL CONTRACTOR SHALL FIELD VERIFY ALL CONDITIONS AND SHALL REPORT TO THE ARCHITECT ANY UNKNOWN CONDITIONS, ERRORS OR CONFLICTS IN THE DRAWINGS BEFORE BEGINNING WORK.
- DO NOT SCALE DRAWINGS.

METAL SOFFIT PANEL

ACOUSTICAL CEILING TILE 24" X 24"

GYPSUM BOARD. PAINT.

1HR FIRE RATED BOTTOM OF SHAFT AT 10'-0" A.F.F. U.N.O. PER DETAIL C5 / AE530

RADIANT CEILING PANEL @ 10'- 0" A.F.F U.N.O.

SUPPLY OR RETURN GRILLE. SEE MECHANICAL

LAY-IN MOUNTED LIGHT FIXUTRE. SEE ELECTRICAL

RECESSED LIGHT FIXTURE. SEE ELECTRICAL.

SURFACE MOUNTED LIGHT FIXTURE. SEE ELECTRICAL.

PROJECTOR SCREEN

SPEAKER

SMOKE DETECTOR

HORN STROBE

CEILING MOUNTED FAN COIL

PROJECTOR

MOTION SENSOR

CAMERA

CEILING ACCESS PANEL

STROBE

DROPCORD

ROLLER SHADE. SEE ACCESSORY SCHEDULE

FUME HOOD

UMBILICAL SERVICE CHASE

PHOTOCELL

KEY PLAN

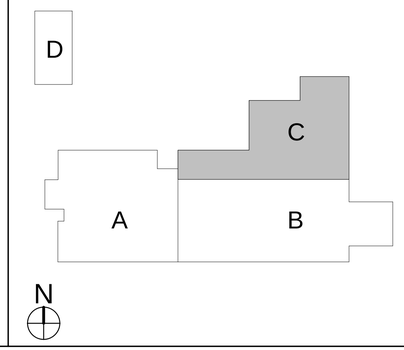

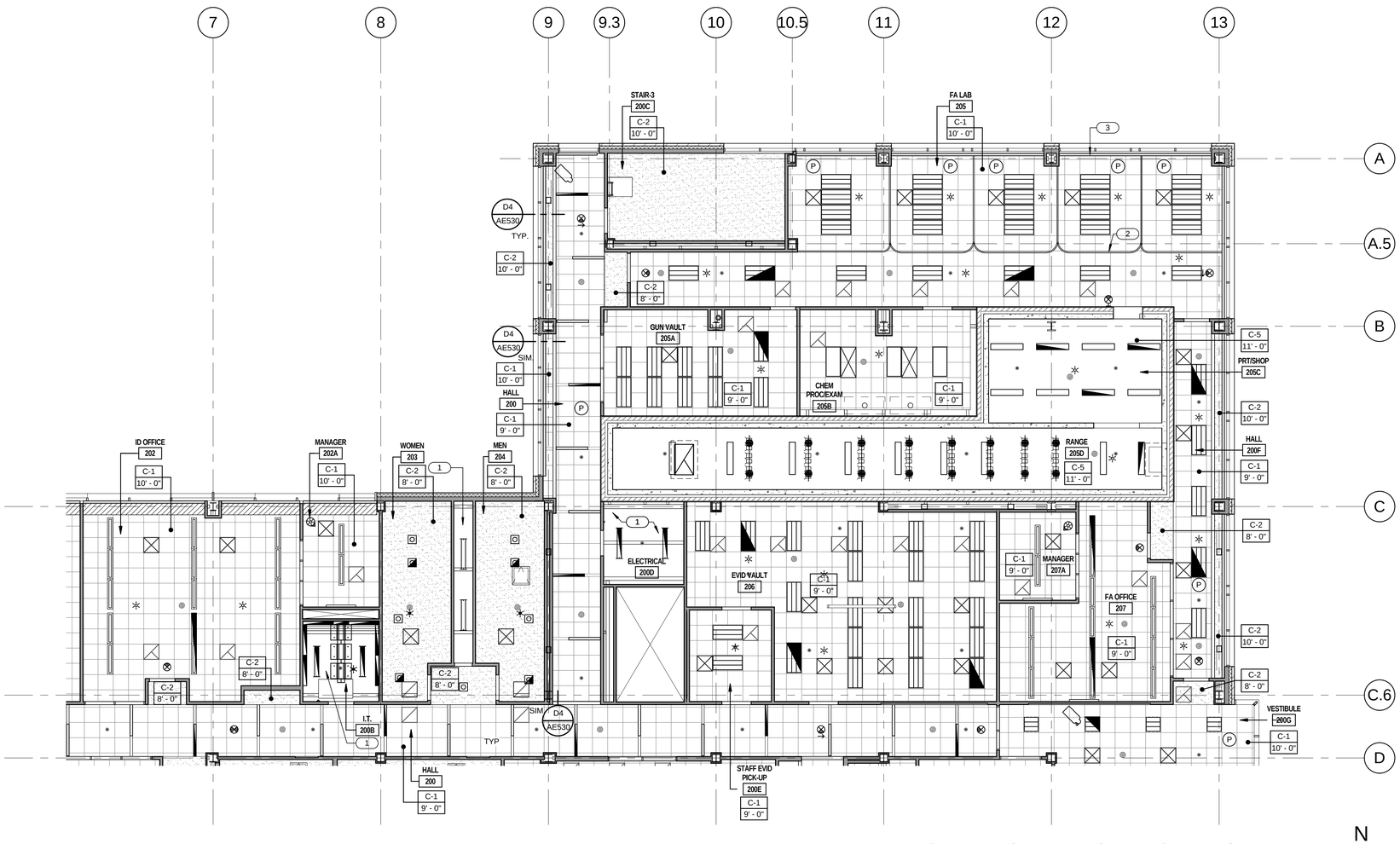

LEVEL 2 AREA C REFLECTED CEILING PLAN

1/8" = 1'-0"

A5 AE110C

N

CRSA

649 E. South Temple
Salt Lake City, UT 84102
801.355.5915

MWL

11798 N. Lakeridge Pkwy.
Ashland, VA 23005
804-228-7473

State of Utah
Department of Administrative Services

DFCM
Division of Facilities Construction & Management
4110 State Office Building
Salt Lake City, Utah 84114
Phone: (801) 538 - 3018
Fax: (801) 538 - 3267

DIVISION OF FACILITIES CONSTRUCTION AND MANAGEMENT
REVIEWED FOR CODE COMPLIANCE
SIGNATURE: Ernie Galt
DATE: 08-05-2014

STATE OF UTAH #134096 MEHRDAD SAMIE LICENSED ARCHITECT
04-28-2014
ARCHITECT-ENGINEER STAMP

Unified State Laboratory Module 2

4451 South 2700 West, Taylorsville, UT 84118

DFCM #: 13020300

Project #: B13-024

DATE:	ISSUE TYPE:
APRIL 21, 2014	BID SET
CHECKED BY	J. NIELSEN
DRAWN BY	F. PITORE

LEVEL 2 AREA C REFLECTED CEILING PLAN

AE110C

VOLUME 1

C:\Users\fernando\Documents_A_13024_Modli_2013_fernando.rvt
7/14/2014 12:26:47 PM

KEYED NOTES

1. EXPOSED STRUCTURE. PAINT.
2. CORRUGATED-PERFORATED METAL PANEL. SEE SPECS.
3. ROLLER WINDOW SHADES TYP. ALL EXTERIOR WINDOWS. REFER TO ACCESSORY SCHEDULE. SEE SPECS.
4. CANOPY EXHAUST HOOD. SEE MECHANICAL DRAWINGS.

GENERAL NOTES

- GENERAL CONTRACTOR SHALL FIELD VERIFY ALL CONDITIONS AND SHALL REPORT TO THE ARCHITECT ANY UNKNOWN CONDITIONS, ERRORS OR CONFLICTS IN THE DRAWINGS BEFORE BEGINNING WORK.
- DO NOT SCALE DRAWINGS.

METAL SOFFIT PANEL

ACOUSTICAL CEILING TILE 24" X 24"

GYPSUM BOARD. PAINT.

1HR FIRE RATED BOTTOM OF SHAFT AT 10'-0" A.F.F. U.N.O. PER DETAIL C5 / AE530

RADIANT CEILING PANEL @ 10'- 0" A.F.F U.N.O.

SUPPLY OR RETURN GRILLE. SEE MECHANICAL

LAY-IN MOUNTED LIGHT FIXUTRE. SEE ELECTRICAL

RECESSED LIGHT FIXTURE. SEE ELECTRICAL.

SURFACE MOUNTED LIGHT FIXTURE. SEE ELECTRICAL.

PROJECTOR SCREEN

SPEAKER

SMOKE DETECTOR

HORN STROBE

CEILING MOUNTED FAN COIL

PROJECTOR

MOTION SENSOR

CAMERA

CEILING ACCESS PANEL

STROBE

DROPCORD

ROLLER SHADE. SEE ACCESSORY SCHEDULE

FUME HOOD

UMBILICAL SERVICE CHASE

PHOTOCELL

KEY PLAN

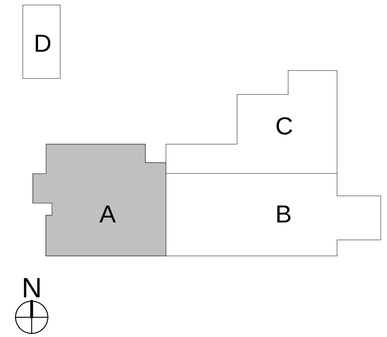

LEVEL 3 AREA A REFLECTED CEILING PLAN

1/8" = 1'-0"

A4 AE111A

N

CRSA
649 E. South Temple
Salt Lake City, UT 84102
801.355.5915

MWL
11798 N. Lakeridge Pkwy.
Ashland, VA 23005
804-228-7473

State of Utah
Department of Administrative Services

Division of Facilities Construction & Management
4110 State Office Building
Salt Lake City, Utah 84114
Phone: (801) 538 - 3018
Fax: (801) 538 - 3267

DIVISION OF FACILITIES CONSTRUCTION AND MANAGEMENT
REVIEWED FOR CODE COMPLIANCE
SIGNATURE: Ernie Calle
DATE: 08-05-2014

STATE OF UTAH #134096 MEHRDAD SAMIE LICENSED ARCHITECT
04-28-2014
ARCHITECT-ENGINEER STAMP

Unified State Laboratory Module 2

4451 South 2700 West, Taylorsville, UT 84118

DFCM #: 13020300

Project #: B13-024

DATE:	ISSUE TYPE:
APRIL 21, 2014	BID SET

CHECKED BY	J. NIELSEN
DRAWN BY	F. PITORE

LEVEL 3 AREA A REFLECTED CEILING PLAN

AE111A

VOLUME 1

C:\Users\fernando\Documents_A_13024_Modli_2013_fernando.rvt
7/14/2014 12:27:04 PM

KEYED NOTES

1. EXPOSED STRUCTURE. PAINT.
2. CORRUGATED-PERFORATED METAL PANEL. SEE SPECS.
3. ROLLER WINDOW SHADES TYP. ALL EXTERIOR WINDOWS. REFER TO ACCESSORY SCHEDULE. SEE SPECS.

GENERAL NOTES

- GENERAL CONTRACTOR SHALL FIELD VERIFY ALL CONDITIONS AND SHALL REPORT TO THE ARCHITECT ANY UNKNOWN CONDITIONS, ERRORS OR CONFLICTS IN THE DRAWINGS BEFORE BEGINNING WORK.
- DO NOT SCALE DRAWINGS.

METAL SOFFIT PANEL

ACOUSTICAL CEILING TILE 24" X 24"

GYPSUM BOARD. PAINT.

1HR FIRE RATED BOTTOM OF SHAFT AT 10'-0" A.F.F. U.N.O. PER DETAIL C5 / AE530

RADIANT CEILING PANEL @ 10'- 0" A.F.F U.N.O.

SUPPLY OR RETURN GRILLE. SEE MECHANICAL

LAY-IN MOUNTED LIGHT FIXUTRE. SEE ELECTRICAL

RECESSED LIGHT FIXTURE. SEE ELECTRICAL.

SURFACE MOUNTED LIGHT FIXTURE. SEE ELECTRICAL.

PROJECTOR SCREEN

SPEAKER

SMOKE DETECTOR

HORN STROBE

CEILING MOUNTED FAN COIL

PROJECTOR

MOTION SENSOR

CAMERA

CEILING ACCESS PANEL

STROBE

DROPCORD

ROLLER SHADE. SEE ACCESSORY SCHEDULE

FUME HOOD

UMBILICAL SERVICE CHASE

PHOTOCELL

KEY PLAN

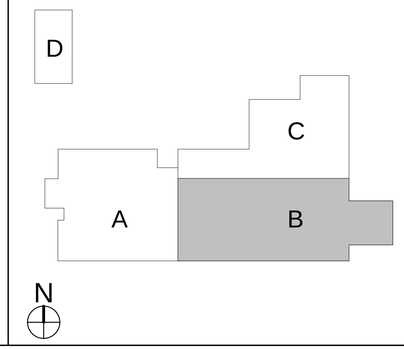

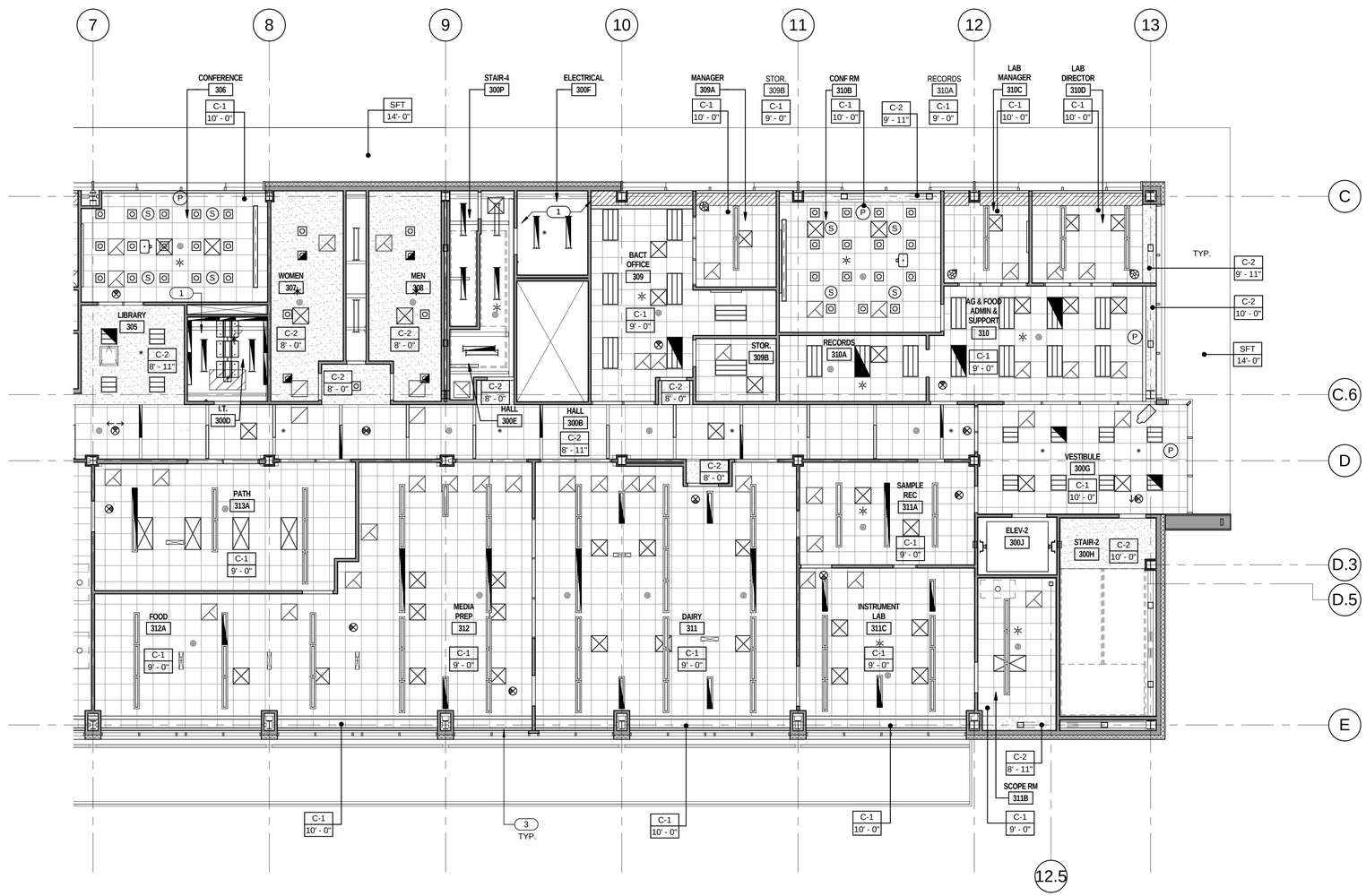

LEVEL 3 AREA B REFLECTED CEILING PLAN

1/8" = 1'-0"

A4 / AE111B

N

CRSA

649 E. South Temple
Salt Lake City, UT 84102
801.355.5915

MWL

11798 N. Lakeridge Pkwy.
Ashland, VA 23005
804-228-7473

State of Utah
Department of Administrative Services

DFCM
Division of Facilities Construction & Management
4110 State Office Building
Salt Lake City, Utah 84114
Phone: (801) 538 - 3018
Fax: (801) 538 - 3267

DIVISION OF FACILITIES CONSTRUCTION AND MANAGEMENT
REVIEWED FOR CODE COMPLIANCE
SIGNATURE: Ernie Gelfe
DATE: 08-05-2014

STATE OF UTAH #134096 MEHRDAD SAMII LICENSED ARCHITECT
04-28-2014
ARCHITECT-ENGINEER STAMP

Unified State Laboratory Module 2

4451 South 2700 West, Taylorsville, UT 84118

DFCM #:	13020300
Project #:	B13-024

DATE:	ISSUE TYPE:
APRIL 21, 2014	BID SET

CHECKED BY	J. NIELSEN
DRAWN BY	F. PITORE

LEVEL 3 AREA B REFLECTED CEILING PLAN

AE111B

VOLUME 1

C:\Users\fernando\Documents_A_13024_Modli_2013_fernando.rvt
7/14/2014 12:27:18 PM

KEYED NOTES

1 TUNNEL BELOW.
2 ELEVATOR PIT.
3 ELEVATOR SUMP PIT.

GENERAL NOTES

- GENERAL CONTRACTOR SHALL FIELD VERIFY ALL CONDITIONS AND SHALL REPORT TO THE ARCHITECT ANY UNKNOWN CONDITIONS, ERRORS OR CONFLICTS IN THE DRAWINGS BEFORE BEGINNING WORK.
- DO NOT SCALE DRAWINGS.

RECESSED SLAB

SLAB PENETRATION

INSULATED SLAB

KEY PLAN

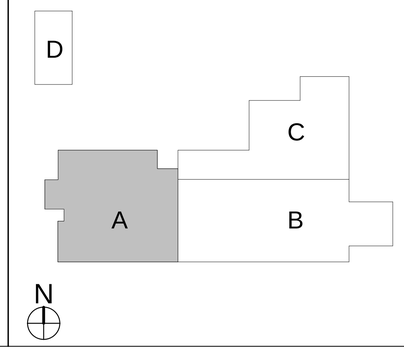

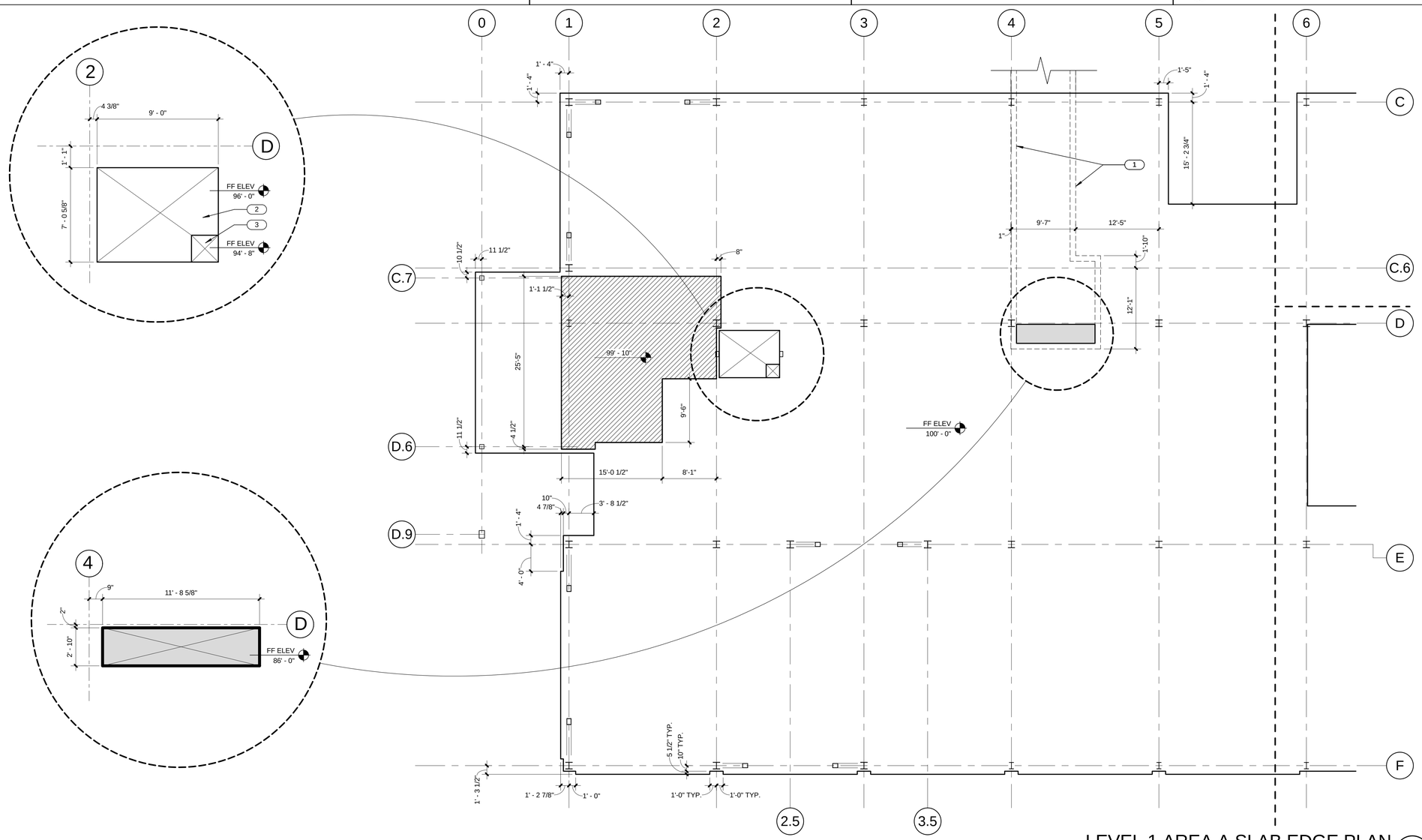

LEVEL 1 AREA A SLAB EDGE PLAN (A5)
1/8" = 1'-0" (AE112A)

CRSA
649 E. South Temple
Salt Lake City, UT 84102
801.355.5915

MWL
11798 N. Lakeridge Pkwy.
Ashland, VA 23005
804-228-7473

State of Utah
Department of Administrative Services
Division of Facilities Construction & Management
4110 State Office Building
Salt Lake City, Utah 84114
Phone: (801) 538 - 3018
Fax: (801) 538 - 3267

DIVISION OF FACILITIES CONSTRUCTION AND MANAGEMENT
REVIEWED FOR CODE COMPLIANCE
SIGNATURE: Eric Ralph
DATE: 08-05-2014

STATE OF UTAH #134098 MEHRDAD SAMIE LICENSED ARCHITECT
04.28.2014
ARCHITECT-ENGINEER STAMP

Unified State Laboratory Module 2

4451 South 2700 West, Taylorsville, UT 84118

DFCM #:	13020300
Project #:	B13-024
DATE:	ISSUE TYPE:
APRIL 21, 2014	BID SET
CHECKED BY	J. NIELSEN
DRAWN BY	F. PITORE

LEVEL 1 AREA A SLAB EDGE PLAN

AE112A

VOLUME 1

C:\Users\fernando\Documents_A_13024_Modli_2013_fernando.rvt
7/14/2014 12:27:27 PM

KEYED NOTES

1 STEEL COLUMN. SEE STRUCTURAL. PAINT WHERE EXPOSED.
2 ELEVATOR PIT.
3 ELEVATOR SUMP PIT.

GENERAL NOTES

- GENERAL CONTRACTOR SHALL FIELD VERIFY ALL CONDITIONS AND SHALL REPORT TO THE ARCHITECT ANY UNKNOWN CONDITIONS, ERRORS OR CONFLICTS IN THE DRAWINGS BEFORE BEGINNING WORK.
- DO NOT SCALE DRAWINGS.

RECESSED SLAB

SLAB PENETRATION

INSULATED SLAB

KEY PLAN

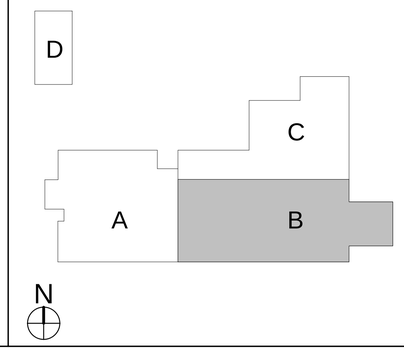

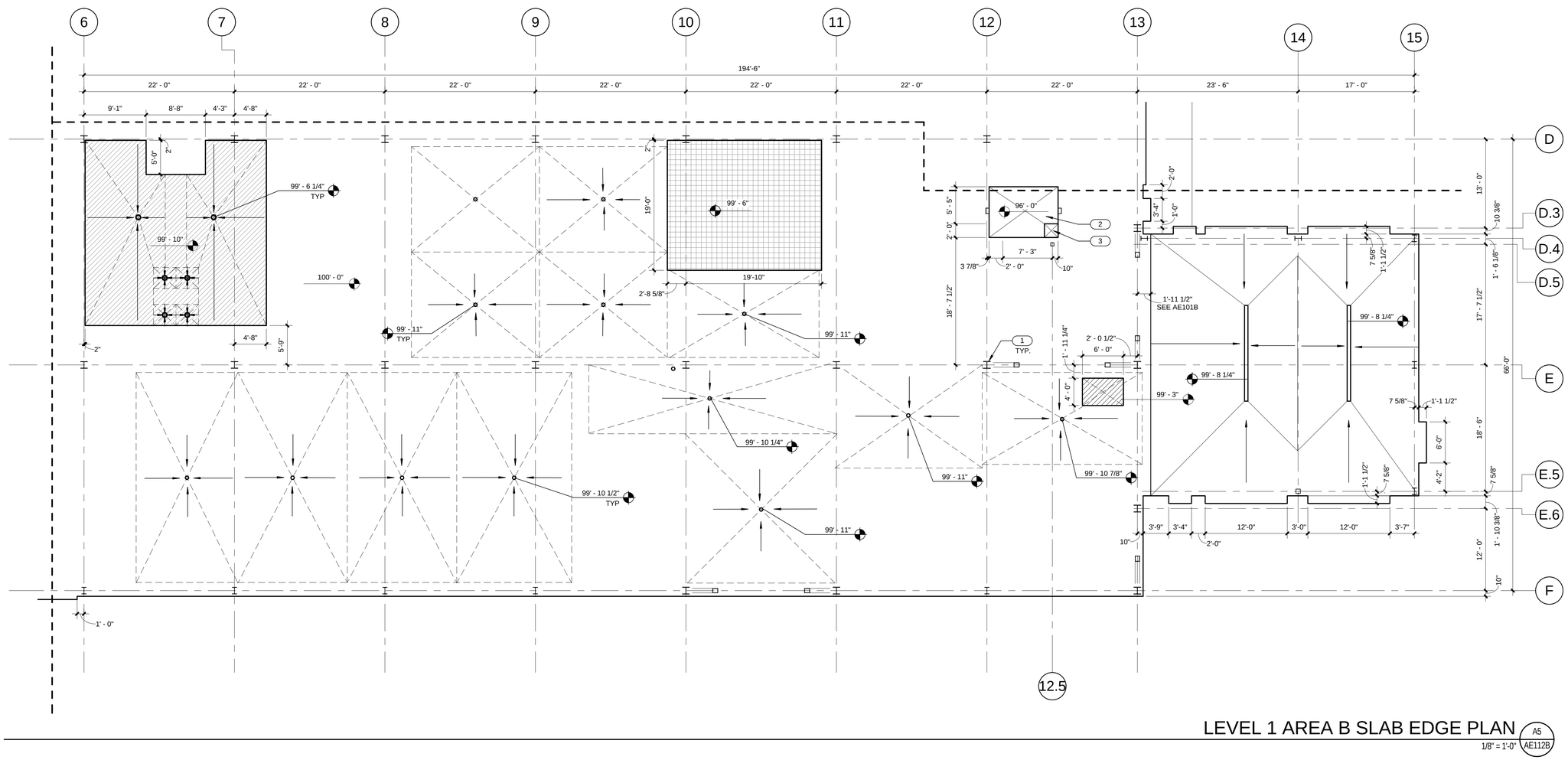

LEVEL 1 AREA B SLAB EDGE PLAN (A5 / AE112B)

1/8" = 1'-0"

CRSA

649 E. South Temple
Salt Lake City, UT 84102
801.355.5915

MWL

11798 N. Lakeridge Pkwy.
Ashland, VA 23005
804-228-7473

State of Utah
Department of Administrative Services

DFCM
Division of Facilities Construction & Management
4110 State Office Building
Salt Lake City, Utah 84114
Phone: (801) 538 - 3018
Fax: (801) 538 - 3267

DIVISION OF FACILITIES CONSTRUCTION AND MANAGEMENT
REVIEWED FOR CODE COMPLIANCE
SIGNATURE: Ernie Galt
DATE: 08-05-2014

STATE OF UTAH #134098 MEHRDAD SAMIE LICENSED ARCHITECT
04.28.2014
ARCHITECT-ENGINEER STAMP

Unified State Laboratory Module 2

4451 South 2700 West, Taylorsville, UT 84118

DFCM #: 13020300
Project #: B13-024

DATE:	ISSUE TYPE:
APRIL 21, 2014	BID SET
CHECKED BY	J. NIELSEN
DRAWN BY	F. PITORE

LEVEL 1 AREA B SLAB EDGE PLAN

AE112B

VOLUME 1

C:\Users\fernando\Documents_A_13024_Modli_2013_fernando.rvt
7/14/2014 12:27:35 PM

KEYED NOTES

1. BRACE FRAME. PAINT WHERE EXPOSED. SEE STRUCTURAL.
2. STEEL COLUMN. SEE STRUCTURAL. PAINT WHERE EXPOSED.
3. WRAP SLAB TO DRAIN FLOOR AS SHOWN.

GENERAL NOTES

- GENERAL CONTRACTOR SHALL FIELD VERIFY ALL CONDITIONS AND SHALL REPORT TO THE ARCHITECT ANY UNKNOWN CONDITIONS, ERRORS OR CONFLICTS IN THE DRAWINGS BEFORE BEGINNING WORK.
- DO NOT SCALE DRAWINGS.

RECESSED SLAB

SLAB PENETRATION

INSULATED SLAB

KEY PLAN

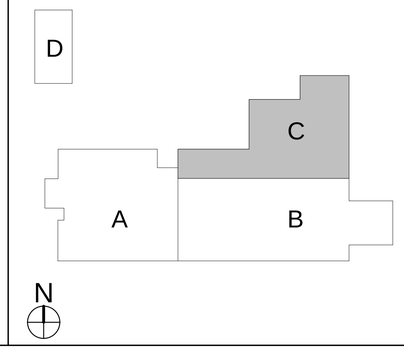

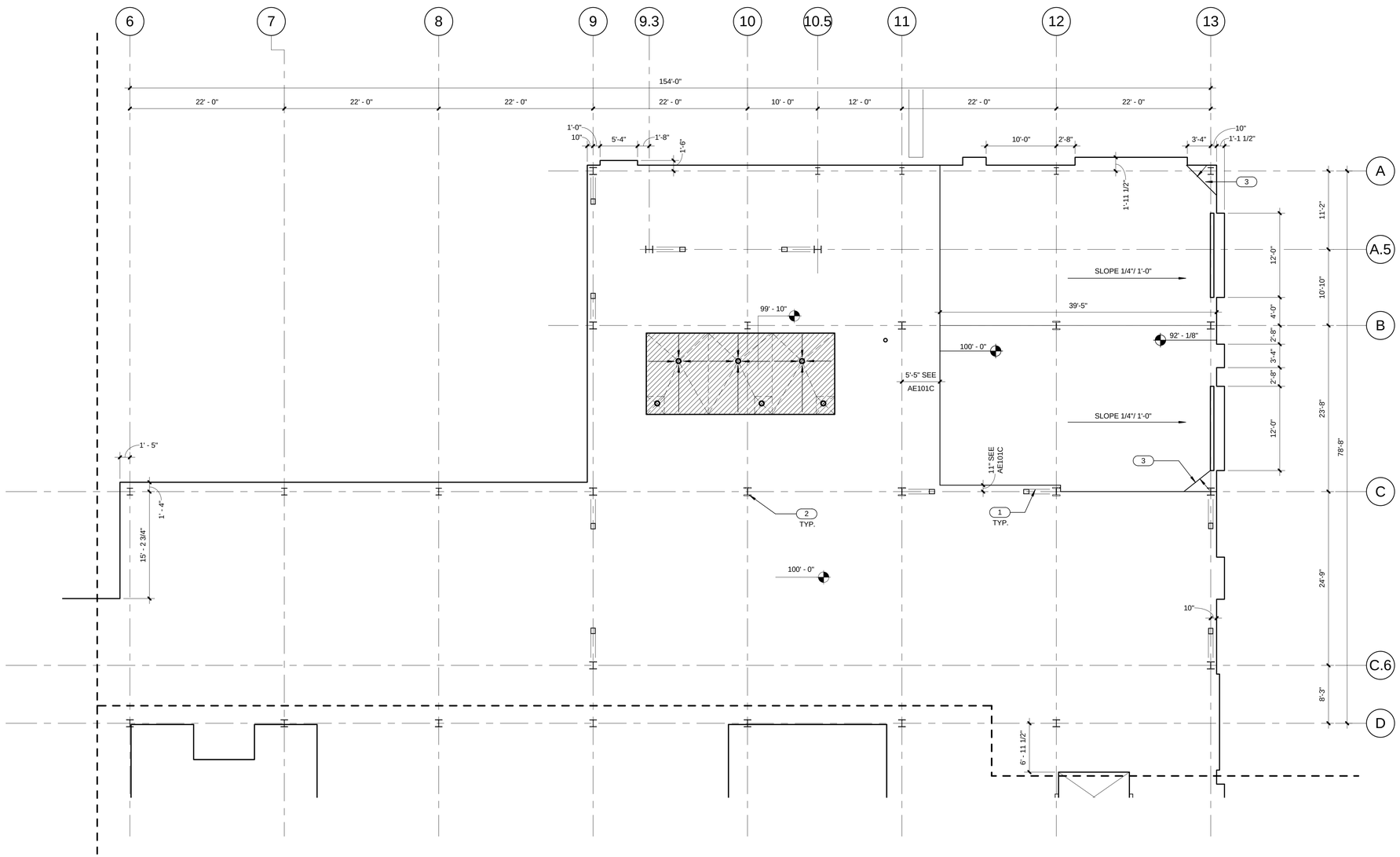

LEVEL 1 AREA C SLAB EDGE PLAN (A5 / AE112C)

1/8" = 1'-0"

CRSA

649 E. South Temple
Salt Lake City, UT 84102
801.355.5915

MWL

11798 N. Lakeridge Pkwy.
Ashland, VA 23005
804-228-7473

State of Utah
Department of Administrative Services

DFCM
Division of Facilities Construction & Management
4110 State Office Building
Salt Lake City, Utah 84114
Phone: (801) 538 - 3018
Fax: (801) 538 - 3267

DIVISION OF FACILITIES CONSTRUCTION AND MANAGEMENT
REVIEWED FOR CODE COMPLIANCE
SIGNATURE: Ernie Calle
DATE: 08-05-2014

STATE OF UTAH #134096 MEHRDAD SAMIE LICENSED ARCHITECT
04-28-2014
ARCHITECT-ENGINEER STAMP

Unified State Laboratory Module 2

4451 South 2700 West, Taylorsville, UT 84118

DFCM #: 13020300

Project #: B13-024

DATE:	ISSUE TYPE:
APRIL 21, 2014	BID SET
CHECKED BY	J. NIELSEN
DRAWN BY	F. PITORE

LEVEL 1 AREA C SLAB EDGE PLAN

AE112C

VOLUME 1

C:\Users\fernando\Documents_A_13024_Modil_2013_fernando.rvt
7/14/2014 12:27:42 PM

KEYED NOTES

1. 6" CONCRETE HOUSEKEEPING PAD. COORDINATE SIZE & PLACEMENT WITH MECHANICAL EQUIPMENT. SEE FINISH SCHEDULE.
2. TUNNEL WALL. SEE STRUCTURAL.

GENERAL NOTES

- GENERAL CONTRACTOR SHALL FIELD VERIFY ALL CONDITIONS AND SHALL REPORT TO THE ARCHITECT ANY UNKNOWN CONDITIONS, ERRORS OR CONFLICTS IN THE DRAWINGS BEFORE BEGINNING WORK.
- DO NOT SCALE DRAWINGS.

RECESSED SLAB

SLAB PENETRATION

INSULATED SLAB

KEY PLAN

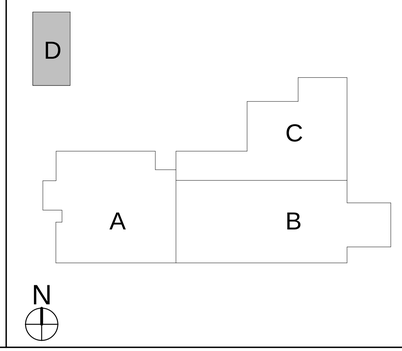

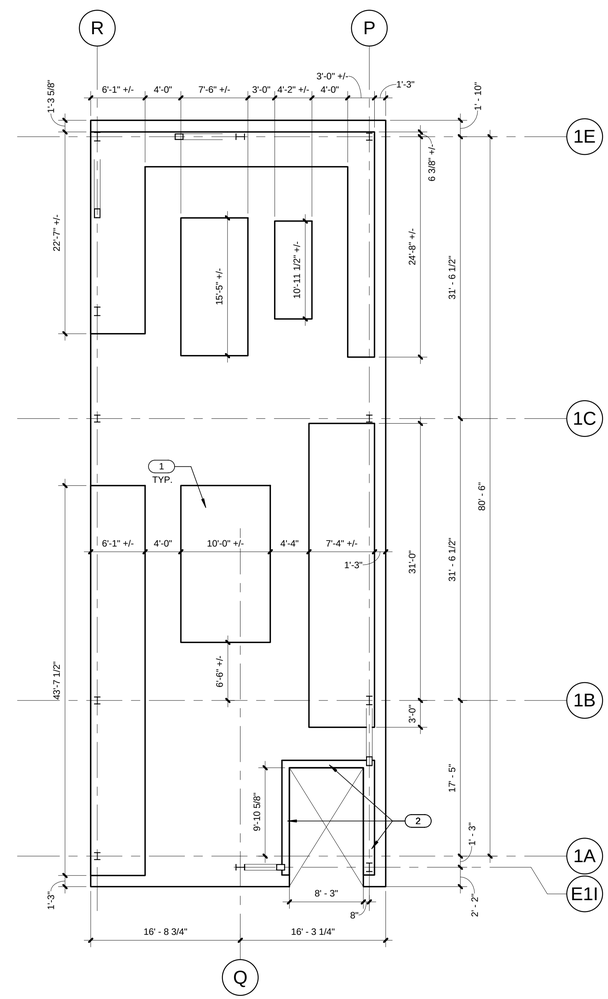

LEVEL 1 AREA D SLAB EDGE PLAN (A5 / AE112D)

1/8" = 1'-0"

CRSA

649 E. South Temple
Salt Lake City, UT 84102
801.355.5915

MWL

11798 N. Lakeridge Pkwy.
Ashland, VA 23005
804-228-7473

State of Utah
Department of Administrative Services

Division of Facilities Construction & Management
4110 State Office Building
Salt Lake City, Utah 84114
Phone: (801) 538 - 3018
Fax: (801) 538 - 3267

DIVISION OF FACILITIES CONSTRUCTION AND MANAGEMENT
REVIEWED FOR CODE COMPLIANCE
SIGNATURE: Ernie Calle
DATE: 08-05-2014

STATE OF UTAH
#134096
MEHRDAD SAMIE
LICENSED ARCHITECT
04.28.2014
ARCHITECT-ENGINEER STAMP

Unified State Laboratory Module 2

4451 South 2700 West,
Taylorsville, UT 84118

DFCM #: 13020300

Project #: B13-024

DATE:	ISSUE TYPE:
APRIL 21, 2014	BID SET
CHECKED BY	J. NIELSEN
DRAWN BY	F. PITORE

LEVEL 1 AREA D SLAB EDGE PLAN

AE112D

VOLUME 1

C:\Users\fernando\Documents_A_13024_Modli_2013_fernando.rvt
7/14/2014 12:27:49 PM

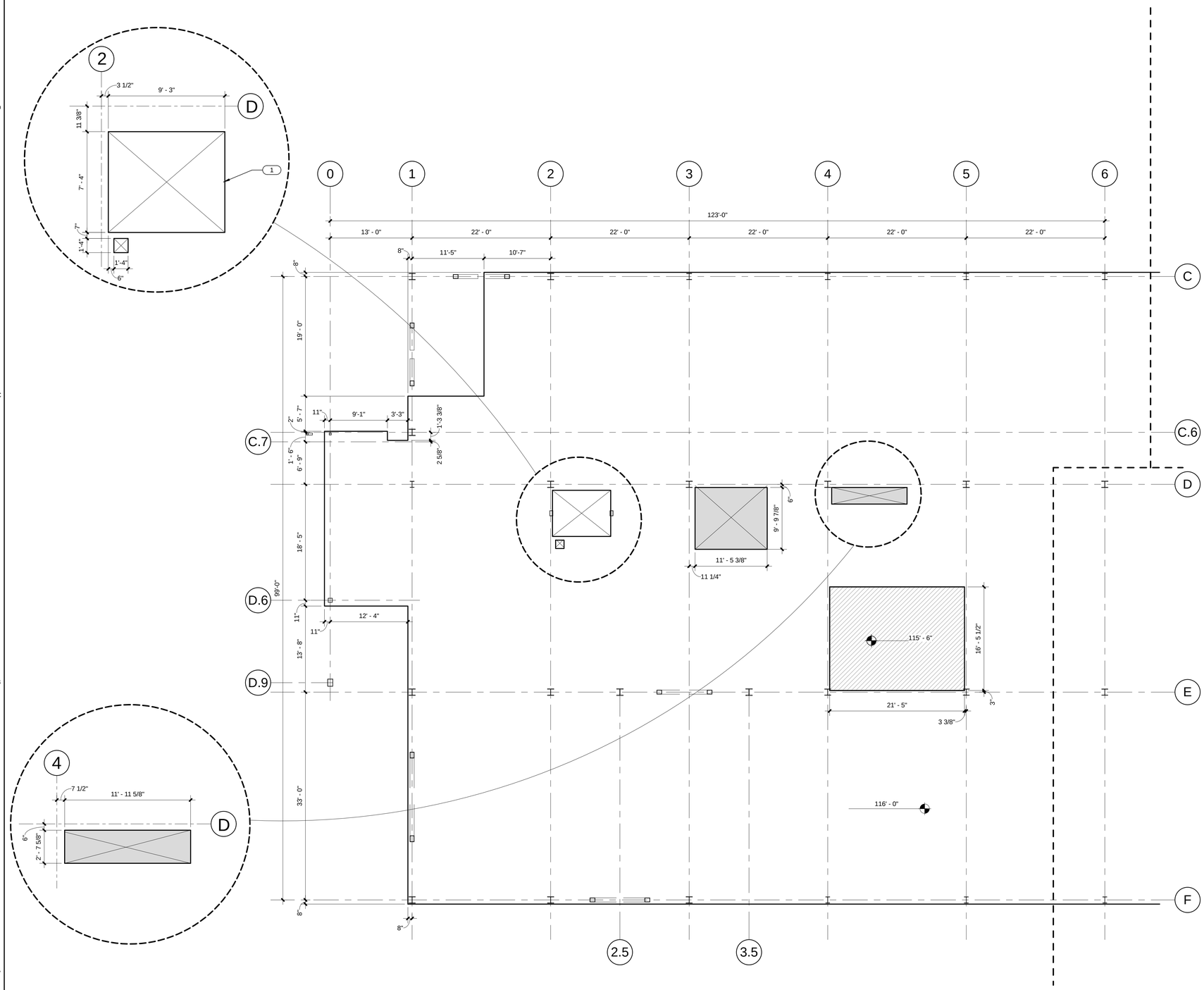

LEVEL 2 AREA A SLAB EDGE PLAN (A4 / AE113A)

1/8" = 1'-0"

GENERAL NOTES

- GENERAL CONTRACTOR SHALL FIELD VERIFY ALL CONDITIONS AND SHALL REPORT TO THE ARCHITECT ANY UNKNOWN CONDITIONS, ERRORS OR CONFLICTS IN THE DRAWINGS BEFORE BEGINNING WORK.
- DO NOT SCALE DRAWINGS.

RECESSED SLAB

SLAB PENETRATION

INSULATED SLAB

KEYED NOTES

1 OPENING FOR ELEVATOR SHAFT.

KEY PLAN

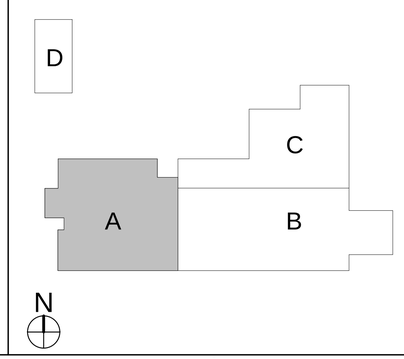

CRSA

649 E. South Temple
Salt Lake City, UT 84102
801.355.5915

MWL

11798 N. Lakeridge Pkwy.
Ashland, VA 23005
804-228-7473

State of Utah
Department of Administrative Services
Division of Facilities Construction & Management
4110 State Office Building
Salt Lake City, Utah 84114
Phone: (801) 538 - 3018
Fax: (801) 538 - 3267

DIVISION OF FACILITIES CONSTRUCTION AND MANAGEMENT
REVIEWED FOR CODE COMPLIANCE
SIGNATURE: Ernie Calle
DATE: 08-05-2014

STATE OF UTAH #134096 MEHRDAD SAMII LICENSED ARCHITECT
04-28-2014
ARCHITECT-ENGINEER STAMP

Unified State Laboratory Module 2

4451 South 2700 West, Taylorsville, UT 84118

DFCM #: 13020300

Project #: B13-024

DATE:	ISSUE TYPE:
APRIL 21, 2014	BID SET

CHECKED BY	J. NIELSEN
DRAWN BY	F. PITORE

LEVEL 2 AREA A SLAB EDGE PLAN

AE113A

VOLUME 1

C:\Users\fernando\Documents_A_13024_Modil_2013_fernando.rvt
7/14/2014 12:27:56 PM

KEYED NOTES

1 OPENING FOR ELEVATOR SHAFT.

GENERAL NOTES

- GENERAL CONTRACTOR SHALL FIELD VERIFY ALL CONDITIONS AND SHALL REPORT TO THE ARCHITECT ANY UNKNOWN CONDITIONS, ERRORS OR CONFLICTS IN THE DRAWINGS BEFORE BEGINNING WORK.
- DO NOT SCALE DRAWINGS.

RECESSED SLAB

SLAB PENETRATION

INSULATED SLAB

KEY PLAN

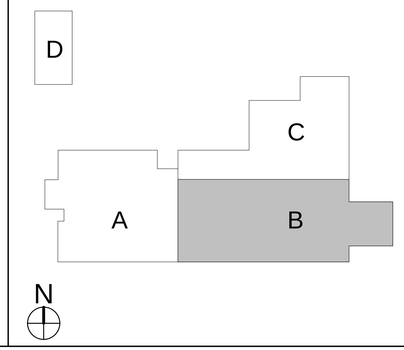

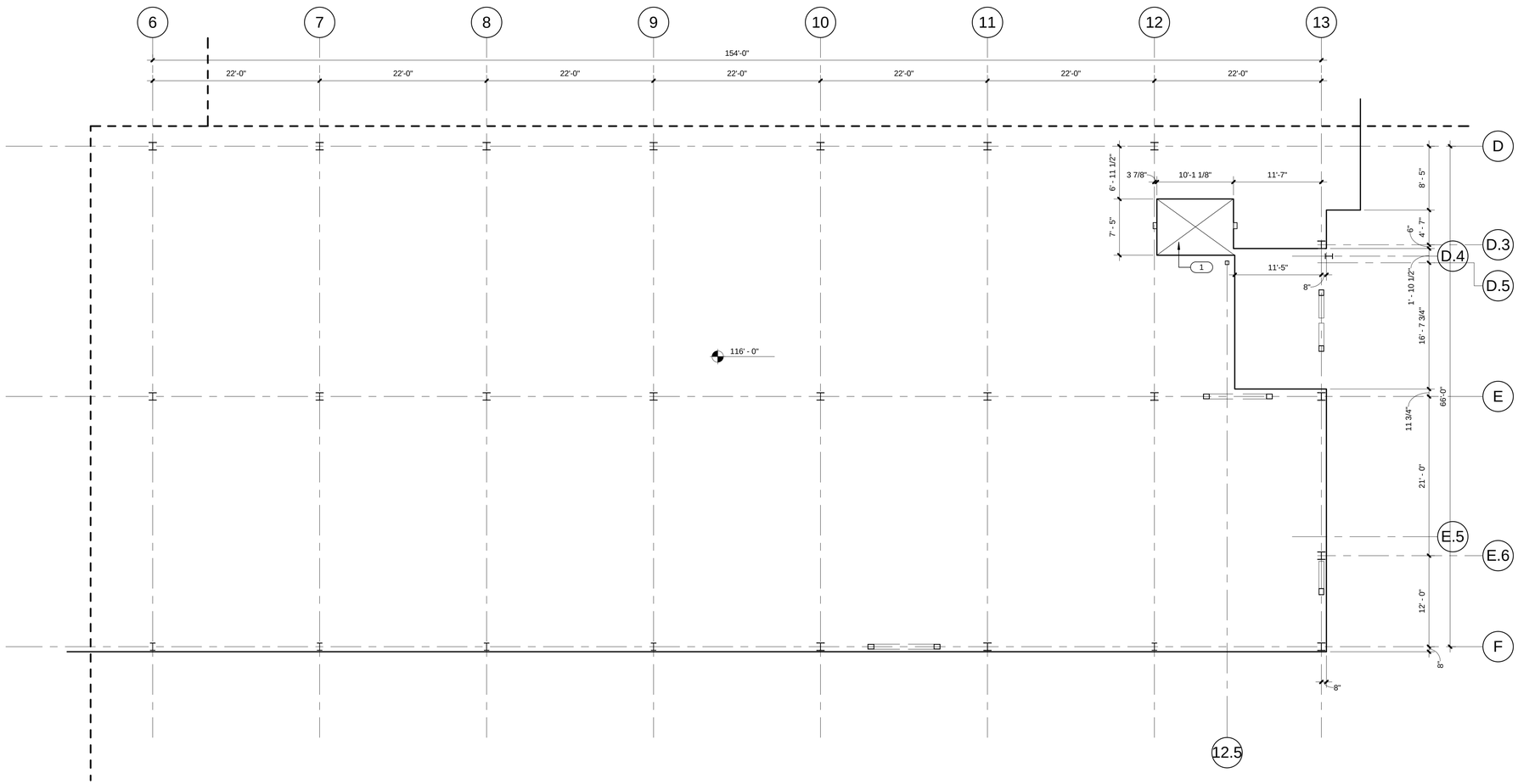

LEVEL 2 AREA B SLAB EDGE PLAN (A5 / AE113B)

1/8" = 1'-0"

CRSA

649 E. South Temple
Salt Lake City, UT 84102
801.355.5915

MWL

11798 N. Lakeridge Pkwy.
Ashland, VA 23005
804-228-7473

State of Utah
Department of Administrative Services
Division of Facilities Construction & Management
4110 State Office Building
Salt Lake City, Utah 84114
Phone: (801) 538 - 3018
Fax: (801) 538 - 3267

DIVISION OF FACILITIES CONSTRUCTION AND MANAGEMENT
REVIEWED FOR CODE COMPLIANCE
SIGNATURE: Ernie Gelfe
DATE: 08-05-2014

STATE OF UTAH #134096 MEHRDAD SAMIE LICENSED ARCHITECT
04.28.2014
ARCHITECT-ENGINEER STAMP

Unified State Laboratory Module 2

4451 South 2700 West, Taylorsville, UT 84118

DFCM #: 13020300

Project #: B13-024

DATE:	ISSUE TYPE:
APRIL 21, 2014	BID SET

CHECKED BY	J. NIELSEN
DRAWN BY	F. PITORE

LEVEL 2 AREA B SLAB EDGE PLAN

AE113B

VOLUME 1

C:\Users\fernando\Documents_A_13024_Modit_2013_fernando.rvt
7/14/2014 12:28:03 PM

KEYED NOTES

1 STEEL COLUMN. SEE STRUCTURAL. PAINT WHERE EXPOSED.
2 BRACE FRAME. PAINT WHERE EXPOSED. SEE STRUCTURAL.

GENERAL NOTES

- GENERAL CONTRACTOR SHALL FIELD VERIFY ALL CONDITIONS AND SHALL REPORT TO THE ARCHITECT ANY UNKNOWN CONDITIONS, ERRORS OR CONFLICTS IN THE DRAWINGS BEFORE BEGINNING WORK.
- DO NOT SCALE DRAWINGS.

RECESSED SLAB

SLAB PENETRATION

INSULATED SLAB

KEY PLAN

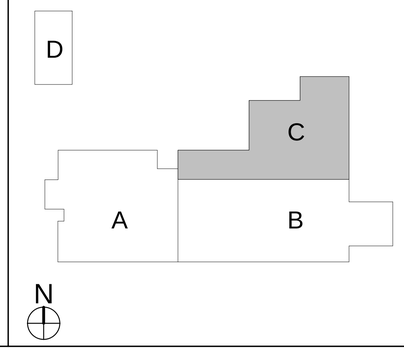

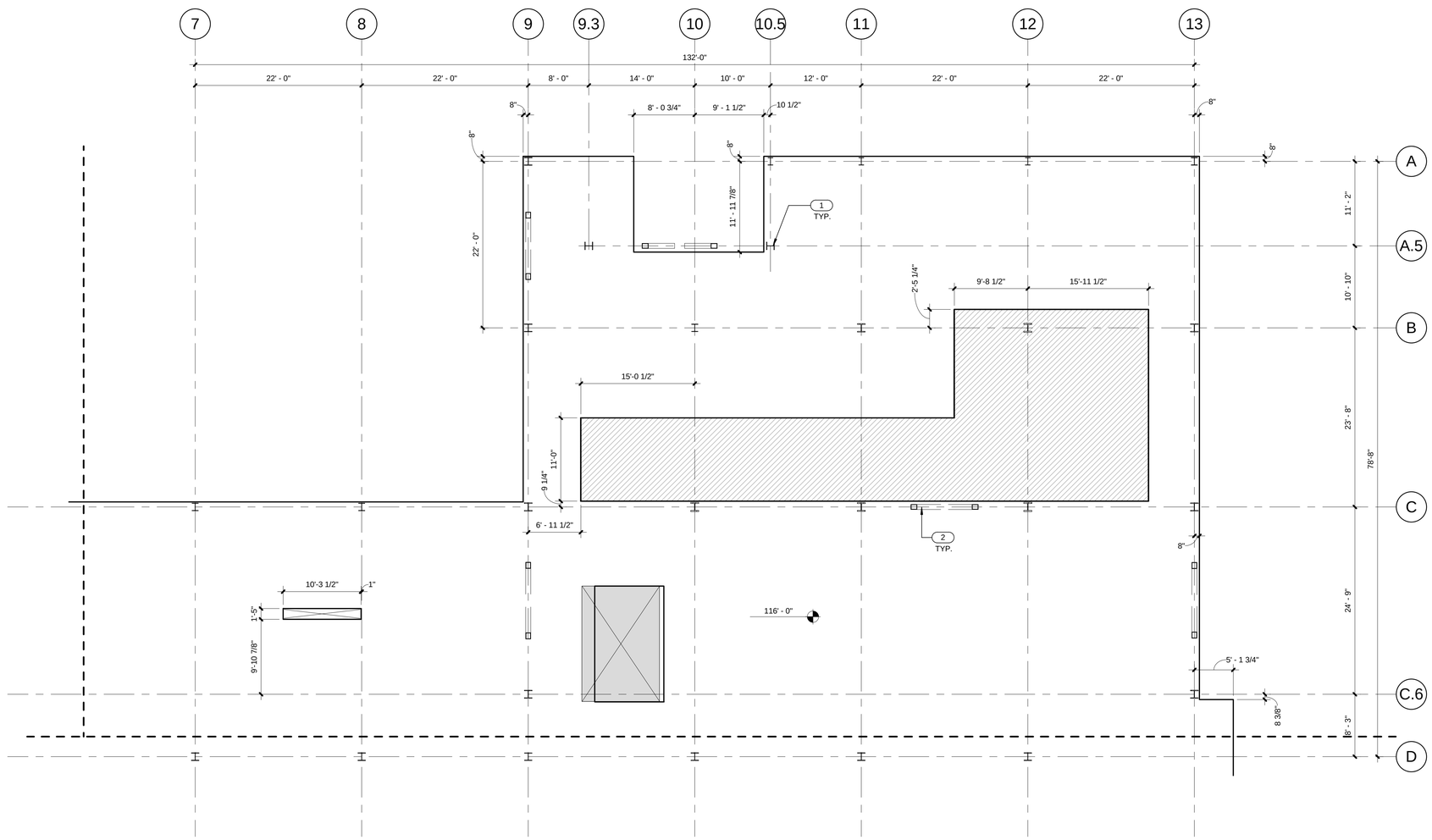

LEVEL 2 AREA C SLAB EDGE PLAN (A5 / AE113C)
1/8" = 1'-0"

CRSA
649 E. South Temple
Salt Lake City, UT 84102
801.355.5915

MWL
11798 N. Lakeridge Pkwy.
Ashland, VA 23005
804-228-7473

State of Utah
Department of Administrative Services
Division of Facilities Construction & Management
4110 State Office Building
Salt Lake City, Utah 84114
Phone: (801) 538 - 3018
Fax: (801) 538 - 3267

DIVISION OF FACILITIES CONSTRUCTION AND MANAGEMENT
REVIEWED FOR CODE COMPLIANCE
SIGNATURE: Ernie Gelfe
DATE: 08-05-2014

STATE OF UTAH #134096 MEHRDAD SAMIE LICENSED ARCHITECT
04-28-2014
ARCHITECT-ENGINEER STAMP

Unified State Laboratory Module 2

4451 South 2700 West, Taylorsville, UT 84118

DFCM #: 13020300
Project #: B13-024

DATE:	ISSUE TYPE:
APRIL 21, 2014	BID SET
CHECKED BY	J. NIELSEN
DRAWN BY	F. PITORE

LEVEL 2 AREA C SLAB EDGE PLAN

AE113C

VOLUME 1

C:\Users\fernando\Documents_A_13024_Modl_2013_fernando.rvt
7/14/2014 12:28:25 PM

KEYED NOTES

1 STEEL COLUMN. SEE STRUCTURAL. PAINT WHERE EXPOSED.
2 OPENING FOR ELEVATOR SHAFT.

GENERAL NOTES

- GENERAL CONTRACTOR SHALL FIELD VERIFY ALL CONDITIONS AND SHALL REPORT TO THE ARCHITECT ANY UNKNOWN CONDITIONS, ERRORS OR CONFLICTS IN THE DRAWINGS BEFORE BEGINNING WORK.
- DO NOT SCALE DRAWINGS.

RECESSED SLAB

SLAB PENETRATION

INSULATED SLAB

KEY PLAN

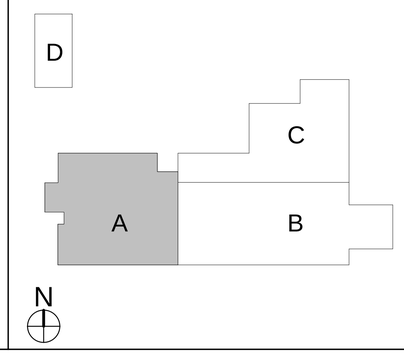

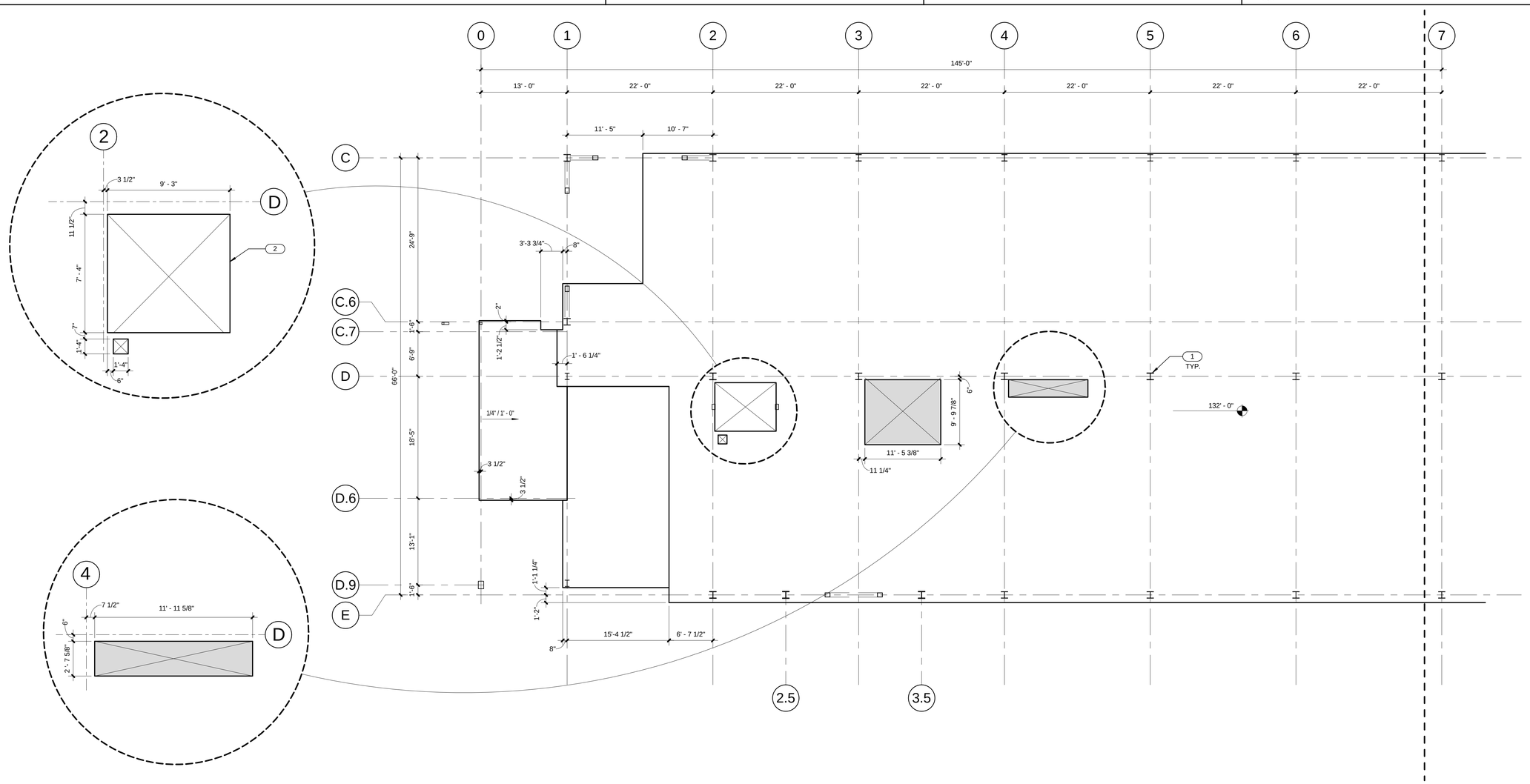

LEVEL 3 AREA A SLAB EDGE PLAN (A5 / AE114A)
1/8" = 1'-0"

CRSA
649 E. South Temple
Salt Lake City, UT 84102
801.355.5915

MWL
11798 N. Lakeridge Pkwy.
Ashland, VA 23005
804-228-7473

State of Utah
Department of Administrative Services
Division of Facilities Construction & Management
4110 State Office Building
Salt Lake City, Utah 84114
Phone: (801) 538 - 3018
Fax: (801) 538 - 3267

DIVISION OF FACILITIES CONSTRUCTION AND MANAGEMENT
REVIEWED FOR CODE COMPLIANCE
SIGNATURE: Ernie Calle
DATE: 08-05-2014

STATE OF UTAH
#134096
MEHRDAD SAMII
LICENSED ARCHITECT
04-28-2014
ARCHITECT-ENGINEER STAMP

Unified State Laboratory Module 2

4451 South 2700 West, Taylorsville, UT 84118

DFCM #:	13020300
Project #:	B13-024

DATE:	ISSUE TYPE:
APRIL 21, 2014	BID SET
CHECKED BY	J. NIELSEN
DRAWN BY	F. PITORE

LEVEL 3 AREA A SLAB EDGE PLAN

AE114A

VOLUME 1

C:\Users\fernando\Documents_A_13024_Modli_2013_fernando.rvt
7/14/2014 12:28:32 PM

KEYED NOTES

1. STEEL COLUMN. SEE STRUCTURAL. PAINT WHERE EXPOSED.
2. OPENING FOR ELEVATOR SHAFT.
3. BRACE FRAME. PAINT WHERE EXPOSED. SEE STRUCTURAL.

GENERAL NOTES

- GENERAL CONTRACTOR SHALL FIELD VERIFY ALL CONDITIONS AND SHALL REPORT TO THE ARCHITECT ANY UNKNOWN CONDITIONS, ERRORS OR CONFLICTS IN THE DRAWINGS BEFORE BEGINNING WORK.
- DO NOT SCALE DRAWINGS.

RECESSED SLAB

SLAB PENETRATION

INSULATED SLAB

KEY PLAN

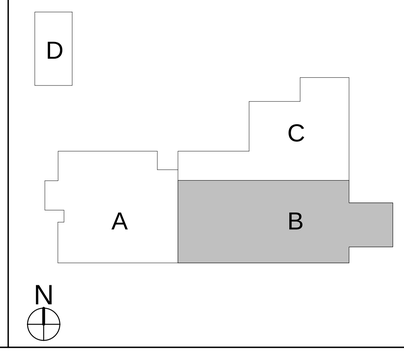

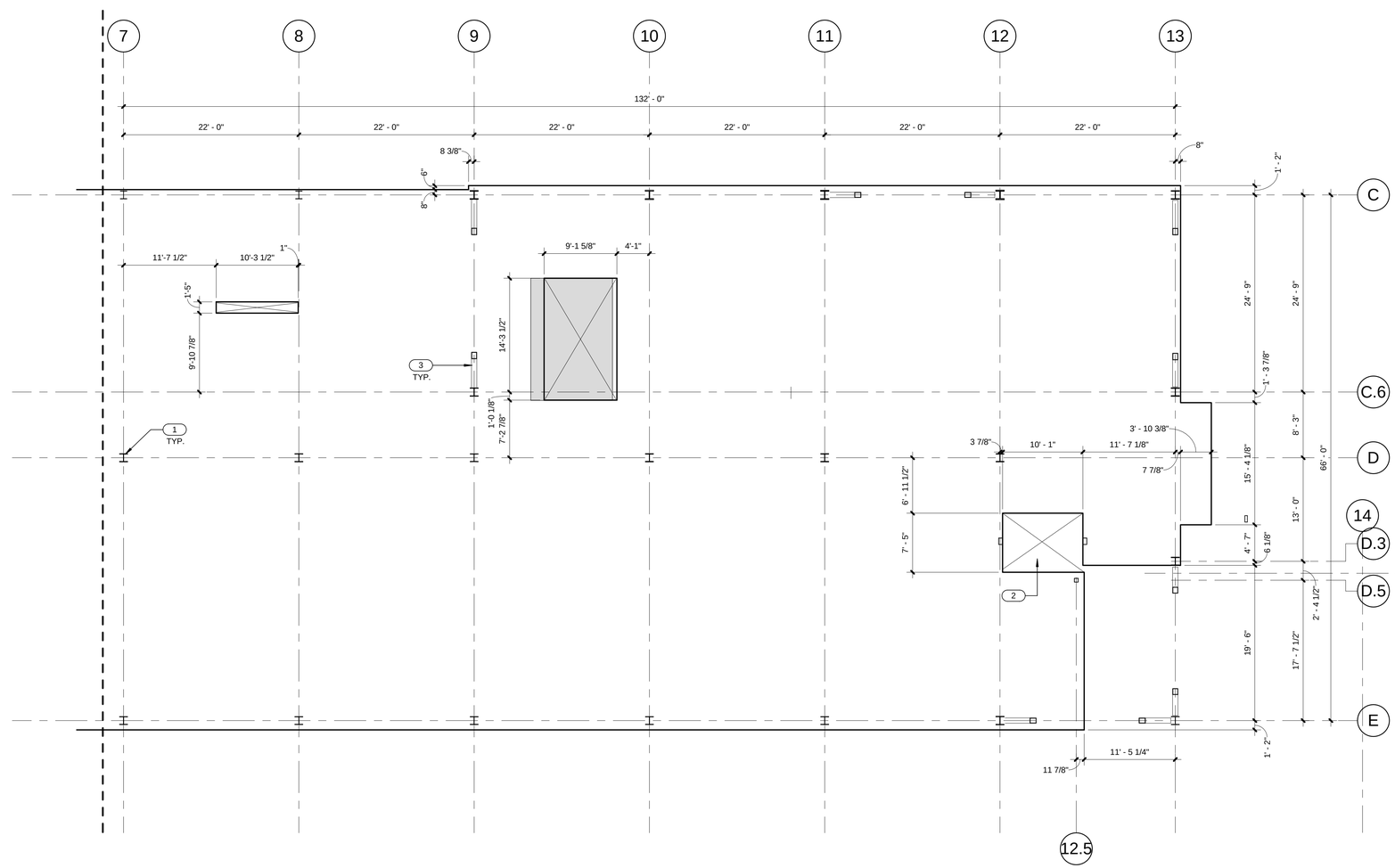

LEVEL 3 AREA B SLAB EDGE PLAN (A5 / AE114B)

1/8" = 1'-0"

CRSA

649 E. South Temple
Salt Lake City, UT 84102
801.355.5915

MWL

11798 N. Lakeridge Pkwy.
Ashland, VA 23005
804-228-7473

State of Utah
Department of Administrative Services

DFCM
Division of Facilities Construction & Management
4110 State Office Building
Salt Lake City, Utah 84114
Phone: (801) 538 - 3018
Fax: (801) 538 - 3267

DIVISION OF FACILITIES CONSTRUCTION AND MANAGEMENT
REVIEWED FOR CODE COMPLIANCE
SIGNATURE: Ernie Calle
DATE: 08-05-2014

STATE OF UTAH #134096 MEHRDAD SAMIE LICENSED ARCHITECT
04-28-2014
ARCHITECT-ENGINEER STAMP

Unified State Laboratory Module 2

4451 South 2700 West,
Taylorsville, UT 84118

DFCM #: 13020300

Project #: B13-024

DATE:	ISSUE TYPE:
APRIL 21, 2014	BID SET

CHECKED BY	J. NIELSEN
DRAWN BY	F. PITORE

LEVEL 3 AREA B SLAB EDGE PLAN

AE114B

VOLUME 1

C:\Users\fernando\Documents_A_13024_Modli_2013_fernando.rvt
7/14/2014 12:28:39 PM

KEYED NOTES

1. OPENING FOR ELEVATOR SHAFT.
2. BRACE FRAME. PAINT WHERE EXPOSED. SEE STRUCTURAL.
3. STEEL COLUMN. SEE STRUCTURAL. PAINT WHERE EXPOSED.
4. 6" CONCRETE HOUSEKEEPING PAD. COORDINATE SIZE & PLACEMENT WITH MECHANICAL EQUIPMENT. SEE FINISH SCHEDULE.

GENERAL NOTES

- GENERAL CONTRACTOR SHALL FIELD VERIFY ALL CONDITIONS AND SHALL REPORT TO THE ARCHITECT ANY UNKNOWN CONDITIONS, ERRORS OR CONFLICTS IN THE DRAWINGS BEFORE BEGINNING WORK.
- DO NOT SCALE DRAWINGS.

RECESSED SLAB

SLAB PENETRATION

INSULATED SLAB

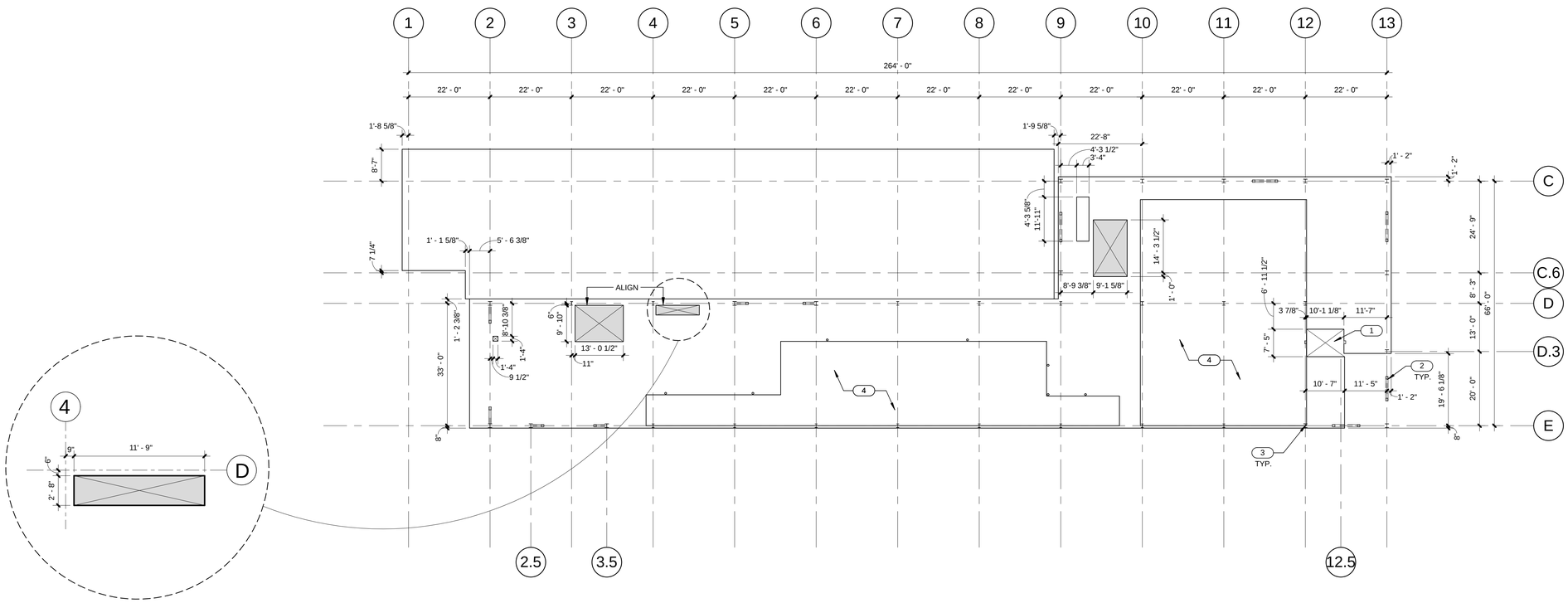

SLAB EDGE PLAN PENTHOUSE LEVEL

1/16" = 1'-0"

A5 / AE115

N

CRSA

649 E. South Temple
Salt Lake City, UT 84102
801.355.5915

MWL

11798 N. Lakeridge Pkwy.
Ashland, VA 23005
804-228-7473

State of Utah
Department of Administrative Services

DFCM
Division of Facilities Construction & Management
4110 State Office Building
Salt Lake City, Utah 84114
Phone: (801) 538 - 3018
Fax: (801) 538 - 3267

DIVISION OF FACILITIES CONSTRUCTION AND MANAGEMENT
REVIEWED FOR CODE COMPLIANCE
SIGNATURE:
DATE: 08-05-2014

STATE OF UTAH #134096 MEHRDAD SAMIE LICENSED ARCHITECT
04-28-2014
ARCHITECT-ENGINEER STAMP

Unified State Laboratory Module 2

4451 South 2700 West,
Taylorsville, UT 84118

DFCM #: 13020300

Project #: B13-024

DATE:	ISSUE TYPE:
APRIL 21, 2014	BID SET
CHECKED BY	J. NIELSEN
DRAWN BY	F. PITORE

PENTHOUSE LEVEL SLAB EDGE PLAN

AE115

VOLUME 1

C:\Users\fernando\Documents_A_13024_Modil_2013_fernando.rvt
7/14/2014 12:28:47 PM

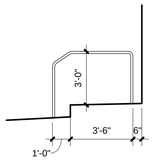

ROOF DETAIL D2 / AE120
1/4" = 1'-0"

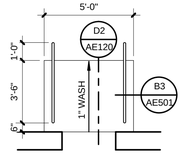

ROOF DETAIL D3 / AE120
1/4" = 1'-0"

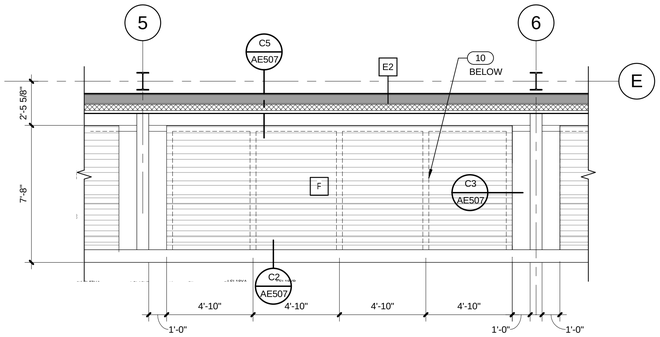

TRELLIS PLAN D4 / AE120
1/4" = 1'-0"

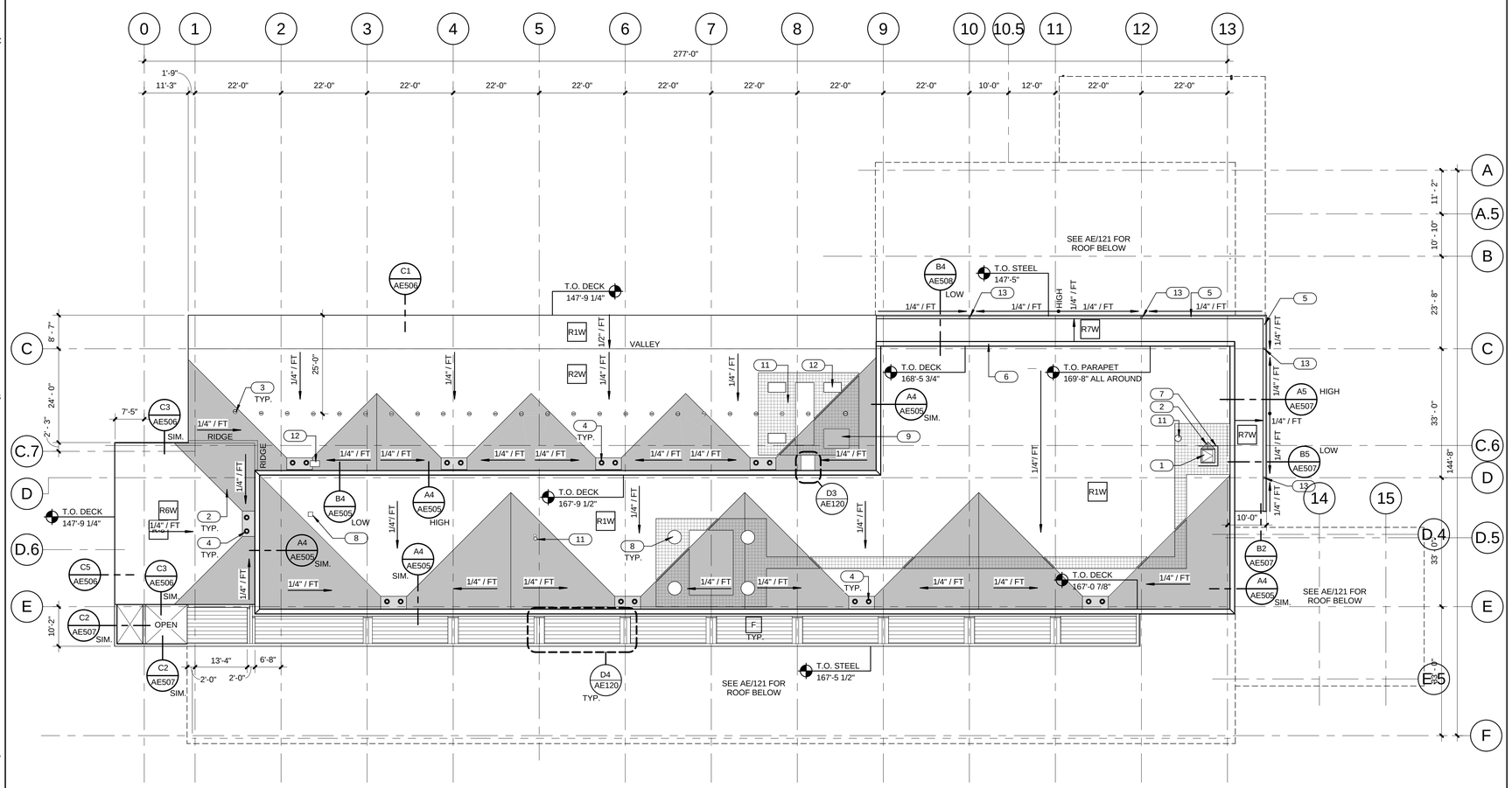

UPPER ROOF PLAN A4 / AE120
1/16" = 1'-0"

N

GENERAL NOTES

- GENERAL CONTRACTOR SHALL FIELD VERIFY ALL CONDITIONS AND SHALL REPORT TO THE ARCHITECT ANY UNKNOWN CONDITIONS, ERRORS OR CONFLICTS IN THE DRAWINGS BEFORE BEGINNING WORK.
- DO NOT SCALE DRAWINGS.

CRICKET

WALK PAD

KEYED NOTES

1 ROOF HATCH. SEE DETAIL D2/AE501
2 ROOF CRICKET.
3 ROOF ANCHOR @ 6'-8" O.C. SEE DETAIL C5/AE501.
4 ROOF DRAIN. SEE DETAIL A5/AE501
5 INTEGRAL GUTTER. SEE REFERENCED DETAIL.
6 PARAPET CAP FLASHING. SEE REFERENCED DETAIL.
7 SAFETY GUARDRAIL. SEE DETAIL C4/AE501.
8 EXHAUST FAN. SEE MECHANICAL DRAWINGS.
9 MECHANICAL EQUIPMENT. SEE MECHANICAL DRAWINGS.
10 STEEL BEAM. PAINT WHERE EXPOSED. SEE STRUCTURAL.
11 EXHAUST FAN. SEE MECHANICAL DRAWINGS.
12 CONDENSOR. SEE MECHANICAL DRAWINGS AND CONTROLLED TEMP. ROOM SPEC.
13 ROOF DRAIN. SEE PLUMBING DRAWINGS.

CRSA
649 E. South Temple
Salt Lake City, UT 84102
801.355.5915

MWL
11798 N. Lakeridge Pkwy.
Ashland, VA 23005
804-228-7473

State of Utah
Department of Administrative Services
Division of Facilities Construction & Management
4110 State Office Building
Salt Lake City, Utah 84114
Phone: (801) 538 - 3018
Fax: (801) 538 - 3267

DIVISION OF FACILITIES CONSTRUCTION AND MANAGEMENT
REVIEWED FOR CODE COMPLIANCE
SIGNATURE: Ernie Calfee
DATE: 08-05-2014

STATE OF UTAH
#134096
MEHRDAD SAMIE
LICENSED ARCHITECT
04-28-2014
ARCHITECT-ENGINEER STAMP

Unified State Laboratory Module 2

4451 South 2700 West,
Taylorsville, UT 84118

DFCM #: 13020300
Project #: B13-024

DATE:	ISSUE TYPE:
APRIL 21, 2014	BID SET

CHECKED BY	J. NIELSEN
DRAWN BY	F. PITORE

UPPER ROOF PLAN

AE120

VOLUME 1

C:\Users\fernando\Documents_A_13024_Modll_2013_fernando.rvt
7/14/2014 12:29:08 PM

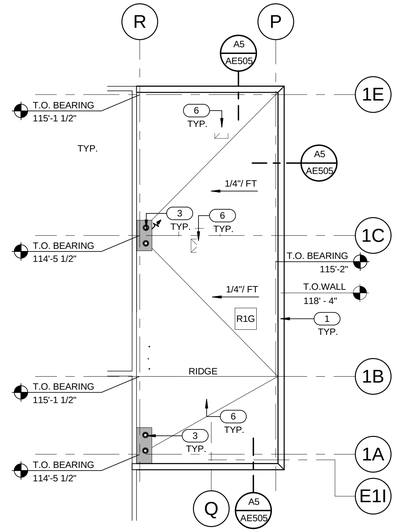

MECHANICAL ROOM ROOF PLAN C2 AE121
1/16" = 1'-0"

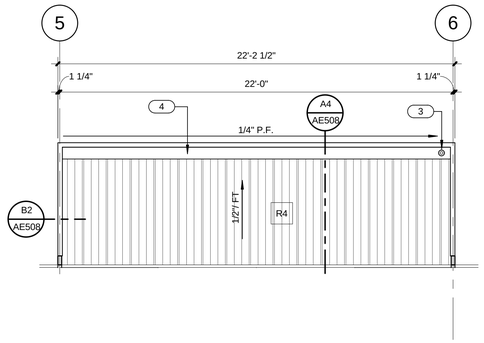

ENLARGED ROOF PLAN C3 AE121
1/4" = 1'-0"

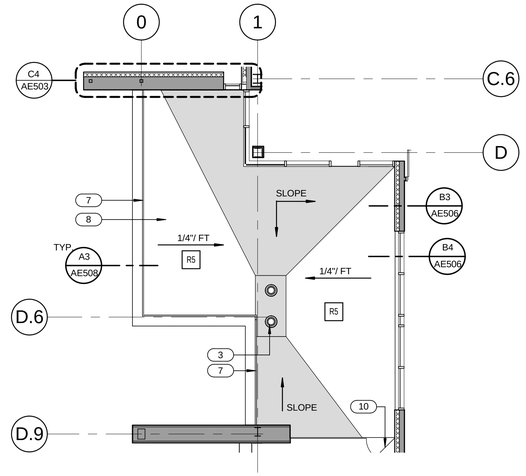

OUTDOOR PATIO FLOOR PLAN C4 AE121
1/8" = 1'-0"

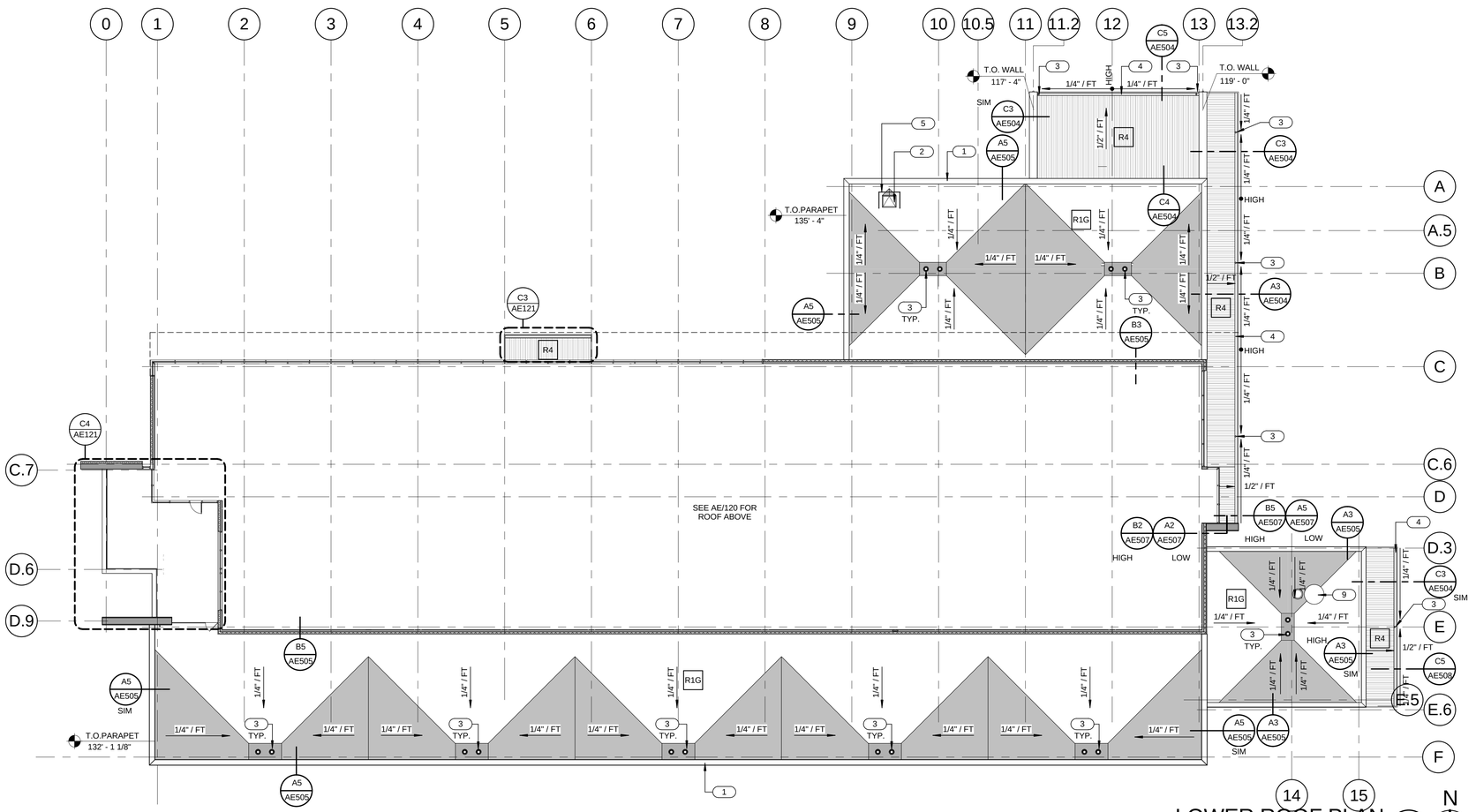

LOWER ROOF PLAN A5 AE121
1/16" = 1'-0"

GENERAL NOTES

- GENERAL CONTRACTOR SHALL FIELD VERIFY ALL CONDITIONS AND SHALL REPORT TO THE ARCHITECT ANY UNKNOWN CONDITIONS, ERRORS OR CONFLICTS IN THE DRAWINGS BEFORE BEGINNING WORK.
- DO NOT SCALE DRAWINGS.

CRICKET

WALK PAD

KEYED NOTES

1 PARAPET CAP FLASHING. SEE REFERENCED DETAIL.
2 ROOF HATCH. SEE DETAIL D2/AE501
3 ROOF DRAIN. SEE DETAIL A5/AE501
4 INTEGRAL GUTTER. SEE REFERENCED DETAIL.
5 SAFETY GUARDRAIL. SEE DETAIL C4/AE501.
6 MECHANICAL EQUIPMENT. SEE MECHANICAL DRAWINGS.
7 GUARDRAIL.
8 PAVERS. SEE SHEET AE/121.
9 EXHAUST FAN. SEE MECHANICAL DRAWINGS.
10 GUARDRAIL GATE.

CRSA
649 E. South Temple
Salt Lake City, UT 84102
801.355.5915

MWL
11798 N. Lakeridge Pkwy.
Ashland, VA 23005
804-228-7473

State of Utah
Department of Administrative Services
DFCM
Division of Facilities Construction & Management
4110 State Office Building
Salt Lake City, Utah 84114
Phone: (801) 538 - 3018
Fax: (801) 538 - 3267

DIVISION OF FACILITIES CONSTRUCTION AND MANAGEMENT
REVIEWED FOR CODE COMPLIANCE
SIGNATURE: Ernie Calle
DATE: 08-05-2014

STATE OF UTAH #134096 MEHRDAD SAMIE LICENSED ARCHITECT
04.28.2014
ARCHITECT-ENGINEER STAMP

Unified State Laboratory Module 2

4451 South 2700 West, Taylorsville, UT 84118

DFCM #:	13020300
Project #:	B13-024
DATE:	ISSUE TYPE:
APRIL 21, 2014	BID SET
CHECKED BY	J. NIELSEN
DRAWN BY	F. PITORE

LOWER ROOF PLAN

AE121

VOLUME 1

C:\Users\fernando\Documents_A_13024_Modll_2013_fernando.rvt
7/14/2014 12:29:25 PM

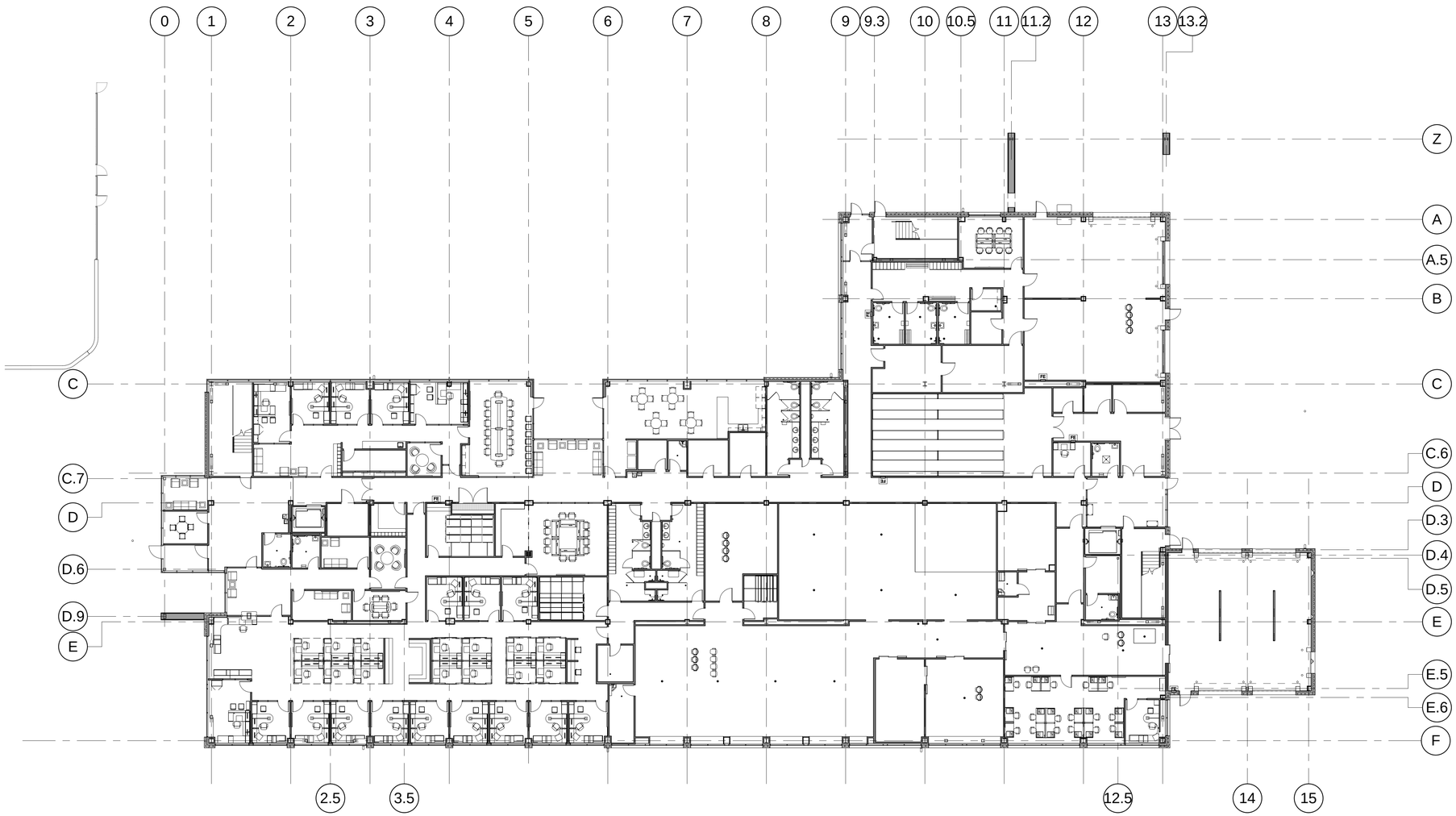

LEVEL 1 FURNISHING PLAN (A5 / AE130)

1/16" = 1'-0"

CRSA

649 E. South Temple
Salt Lake City, UT 84102
801.355.5915

MWL

11798 N. Lakeridge Pkwy.
Ashland, VA 23005
804-228-7473

State of Utah
Department of Administrative Services

Division of Facilities Construction & Management
4110 State Office Building
Salt Lake City, Utah 84114
Phone: (801) 538 - 3018
Fax: (801) 538 - 3267

DIVISION OF FACILITIES CONSTRUCTION AND MANAGEMENT
REVIEWED FOR CODE COMPLIANCE
SIGNATURE:
DATE: 08-05-2014

STATE OF UTAH #134098 MEHRDAD SAMII LICENSED ARCHITECT
04-28-2014
ARCHITECT-ENGINEER STAMP

Unified State Laboratory Module 2

4451 South 2700 West, Taylorsville, UT 84118

DFCM #:	13020300
Project #:	B13-024

DATE:	ISSUE TYPE:
APRIL 21, 2014	BID SET

CHECKED BY	Checker
DRAWN BY	F. PITORE

LEVEL 1 FURNISHING PLAN

AE130

VOLUME 1

C:\Users\fernando\Documents_A_13024_Modl_2013_fernando.rvt
7/14/2014 12:29:40 PM

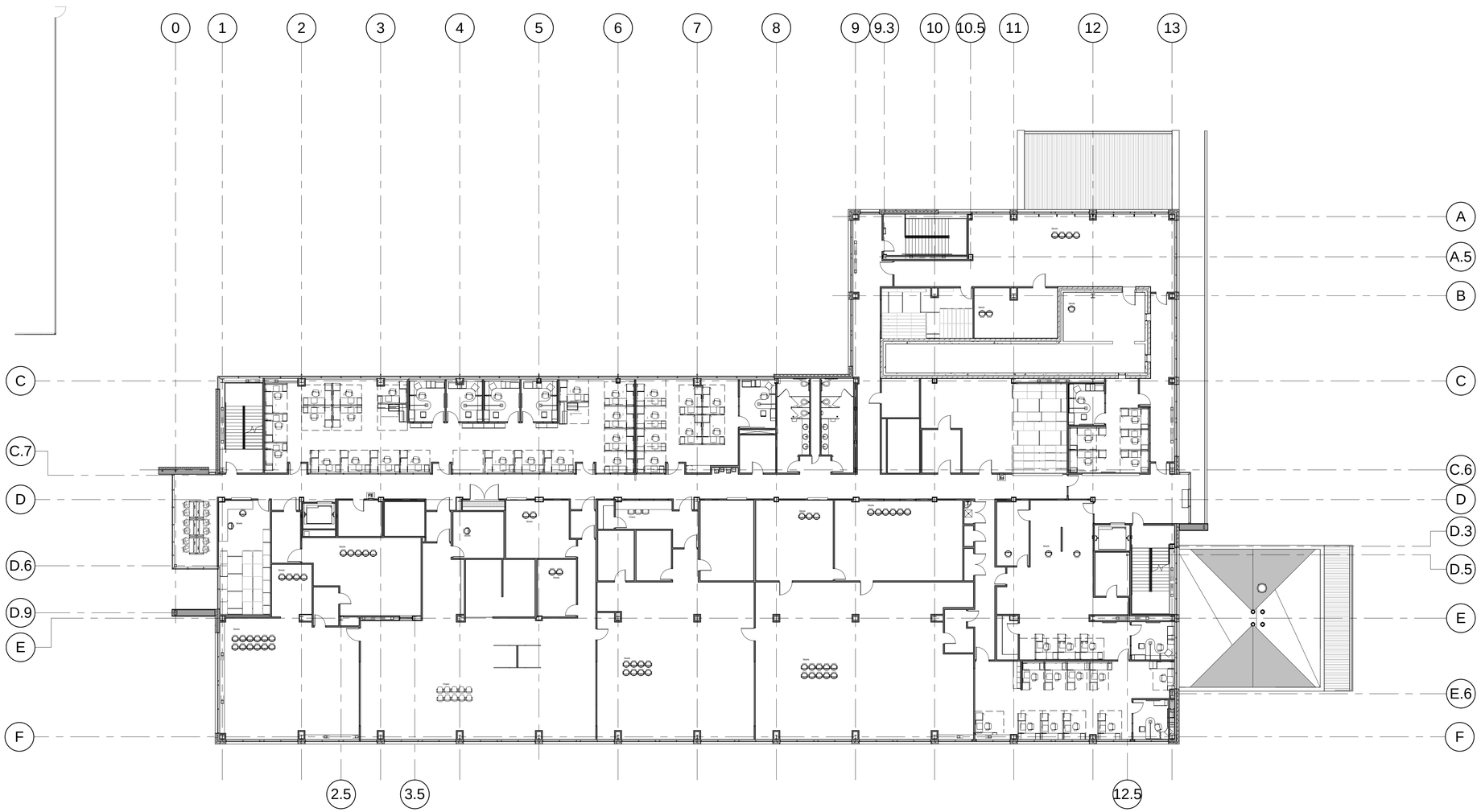

LEVEL 2 FURNISHING PLAN (A5 / AE131)

1/16" = 1'-0"

CRSA

649 E. South Temple
Salt Lake City, UT 84102
801.355.5915

MWL

11798 N. Lakeridge Pkwy.
Ashland, VA 23005
804-228-7473

State of Utah
Department of Administrative Services

Division of Facilities Construction & Management
4110 State Office Building
Salt Lake City, Utah 84114
Phone: (801) 538 - 3018
Fax: (801) 538 - 3267

DIVISION OF FACILITIES CONSTRUCTION AND MANAGEMENT
REVIEWED FOR CODE COMPLIANCE
SIGNATURE:
DATE: 08-05-2014

STATE OF UTAH #134098 MEHRDAD SAMIE LICENSED ARCHITECT
04-28-2014
ARCHITECT-ENGINEER STAMP

Unified State Laboratory Module 2

4451 South 2700 West, Taylorsville, UT 84118

DFCM #: 13020300

Project #: B13-024

DATE:	ISSUE TYPE:
APRIL 21, 2014	BID SET

CHECKED BY	Checker
DRAWN BY	F. PITORE

LEVEL 2 FURNISHING PLAN

AE131

VOLUME 1

C:\Users\fernando\Documents_A_13024_Moatt_2013_fernando.rvt
7/14/2014 12:29:53 PM

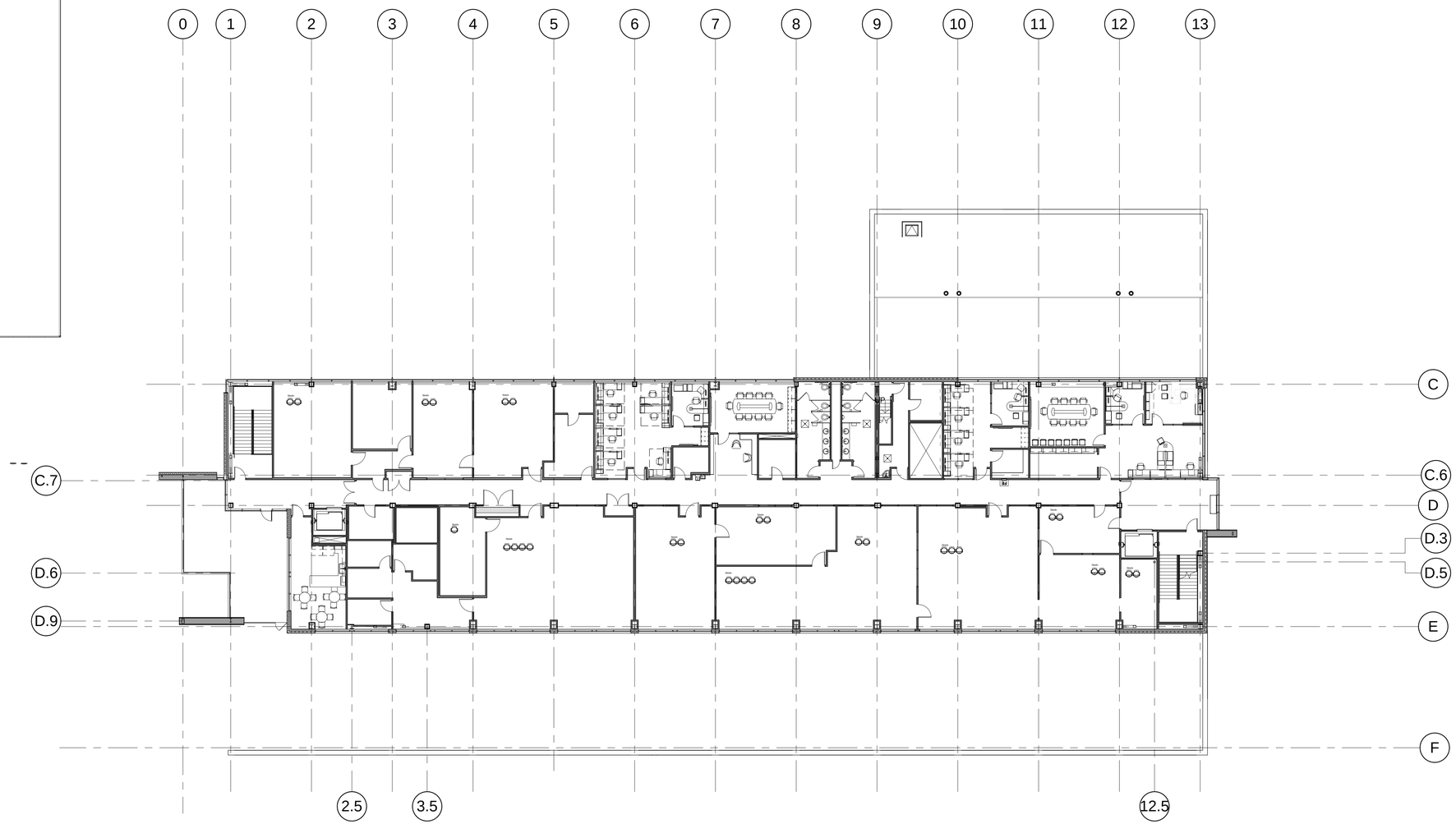

LEVEL 3 FURNISHING PLAN (A5 / AE132)

1/16" = 1'-0"

CRSA

649 E. South Temple
Salt Lake City, UT 84102
801.355.5915

MWL

11798 N. Lakeridge Pkwy.
Ashland, VA 23005
804-228-7473

State of Utah
Department of Administrative Services

Division of Facilities Construction & Management
4110 State Office Building
Salt Lake City, Utah 84114
Phone: (801) 538 - 3018
Fax: (801) 538 - 3267

DIVISION OF FACILITIES CONSTRUCTION AND MANAGEMENT
REVIEWED FOR CODE COMPLIANCE
SIGNATURE:
DATE: 08-05-2014

STATE OF UTAH #134098 MEHRDAD SAMIE LICENSED ARCHITECT
04-28-2014
ARCHITECT-ENGINEER STAMP

Unified State Laboratory Module 2

4451 South 2700 West, Taylorsville, UT 84118

DFCM #: 13020300

Project #: B13-024

DATE:	ISSUE TYPE:
APRIL 21, 2014	BID SET

CHECKED BY	Checker
DRAWN BY	F. PITORE

LEVEL 3 FURNISHING PLAN

AE132

VOLUME 1

C:\Users\fernando\Documents_A_13024_Modli_2013_fernando.rvt
7/14/2014 12:30:05 PM

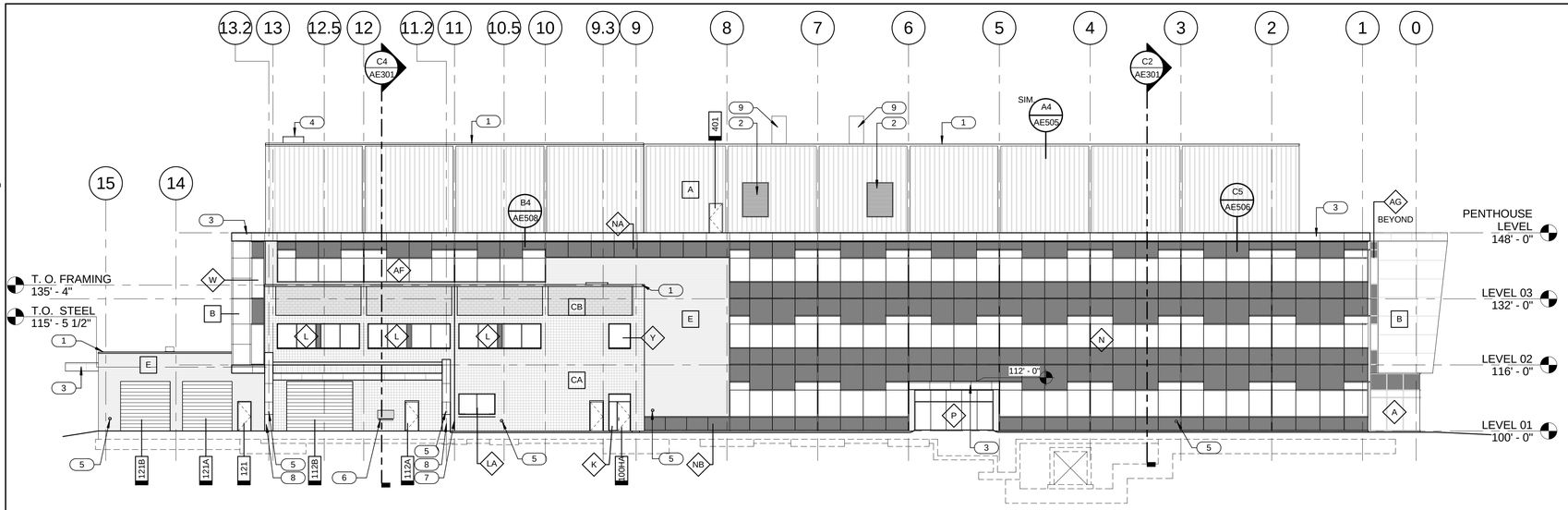

NORTH ELEVATION

1/16" = 1'-0" (C4 / AE201)

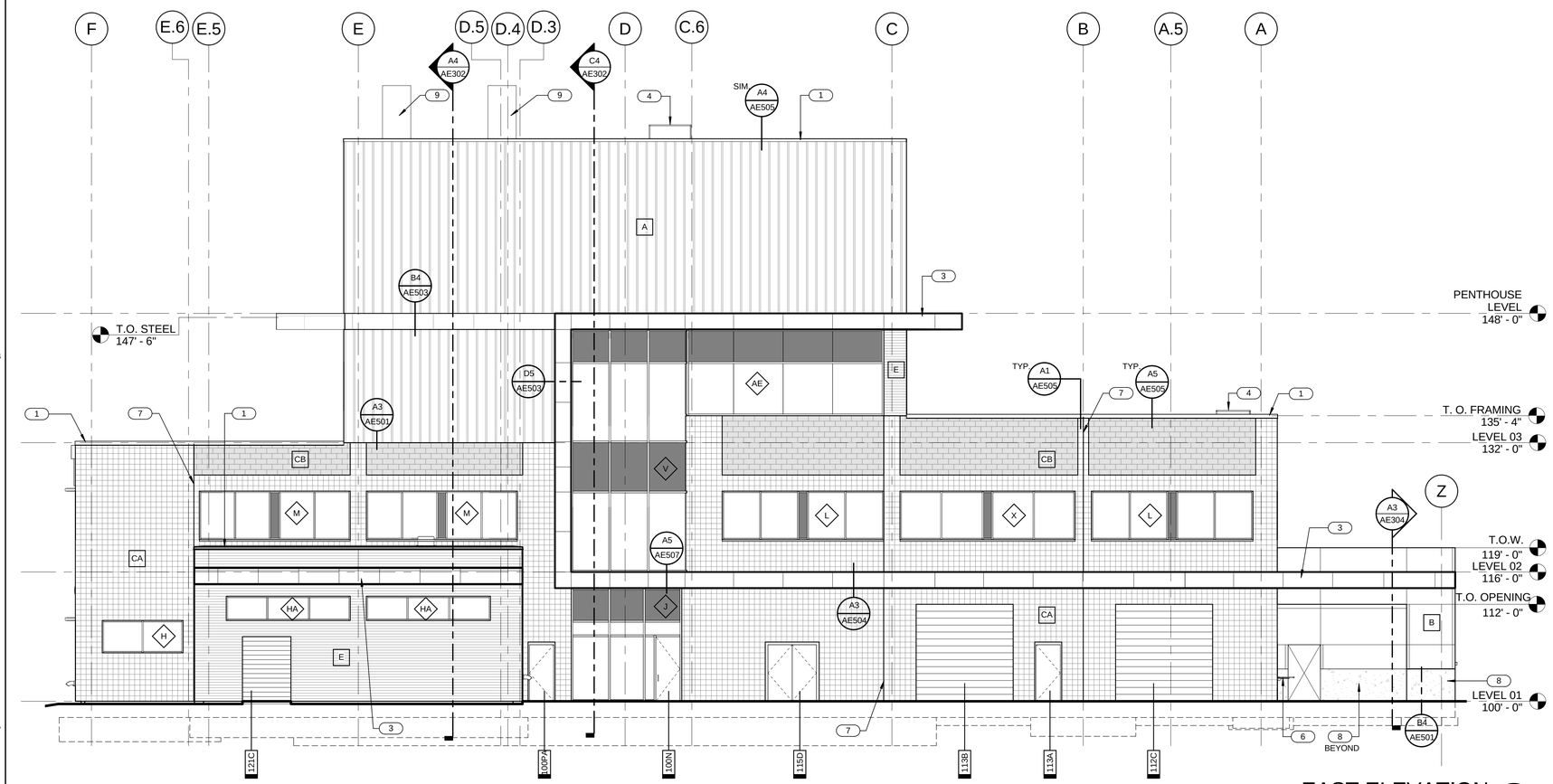

EAST ELEVATION

1/8" = 1'-0" (A4 / AE201)

GENERAL NOTES

- GENERAL CONTRACTOR SHALL FIELD VERIFY ALL CONDITIONS AND SHALL REPORT TO THE ARCHITECT ANY UNKNOWN CONDITIONS, ERRORS OR CONFLICTS IN THE DRAWINGS BEFORE BEGINNING WORK.
- DO NOT SCALE DRAWINGS.

METAL PANEL A	A	
METAL PANEL B	B	
METAL PANEL E	E	
CMU - A CA	CA	
CMU - B	CB	SET THIS PANEL 1" PROUD OF PANEL CA
CMU - C	CC	GRAY TO MATCH EXISTING
CMU - D	CD	TAN TO MATCH EXISTING

KEYED NOTES

1 PARAPET CAP FLASHING. SEE REFERENCED DETAIL.
2 MECHANICAL LOUVER. SEE MECHANICAL DRAWINGS.
3 METAL FASCIA.
4 SAFETY GUARDRAIL. SEE DETAIL C4/AE501.
5 DOWNSPOUT NOZZLE. SEE PLUMBING DRAWINGS.
6 FOLD DOWN SURFACE. SEE IL DRAWINGS.
7 CONTROL JOINT.
8 ARCHITECTURAL CONCRETE WALL.
9 EXHAUST FLUE. SEE MECHANICAL DRAWINGS.

CRSA
649 E. South Temple
Salt Lake City, UT 84102
801.355.5915

MWL
11798 N. Lakeridge Pkwy.
Ashland, VA 23005
804-228-7473

State of Utah
Department of Administrative Services
Division of Facilities Construction & Management
4110 State Office Building
Salt Lake City, Utah 84114
Phone: (801) 538 - 3018
Fax: (801) 538 - 3267

DIVISION OF FACILITIES CONSTRUCTION AND MANAGEMENT
REVIEWED FOR CODE COMPLIANCE
SIGNATURE: Ernie Galyo
DATE: 08-05-2014

STATE OF UTAH #134096 MEHRDAD SAMIE LICENSED ARCHITECT
04.28.2014
ARCHITECT-ENGINEER STAMP

Unified State Laboratory Module 2

4451 South 2700 West, Taylorsville, UT 84118

DFCM #: 13020300
Project #: B13-024

DATE:	ISSUE TYPE:
APRIL 21, 2014	BID SET
CHECKED BY	J. NIELSEN
DRAWN BY	F. PITORE

EXTERIOR ELEVATIONS

AE201

VOLUME 1

C:\Users\fernando\Documents_A_13024_Modli_2013_fernando.rvt
7/14/2014 12:39:21 PM

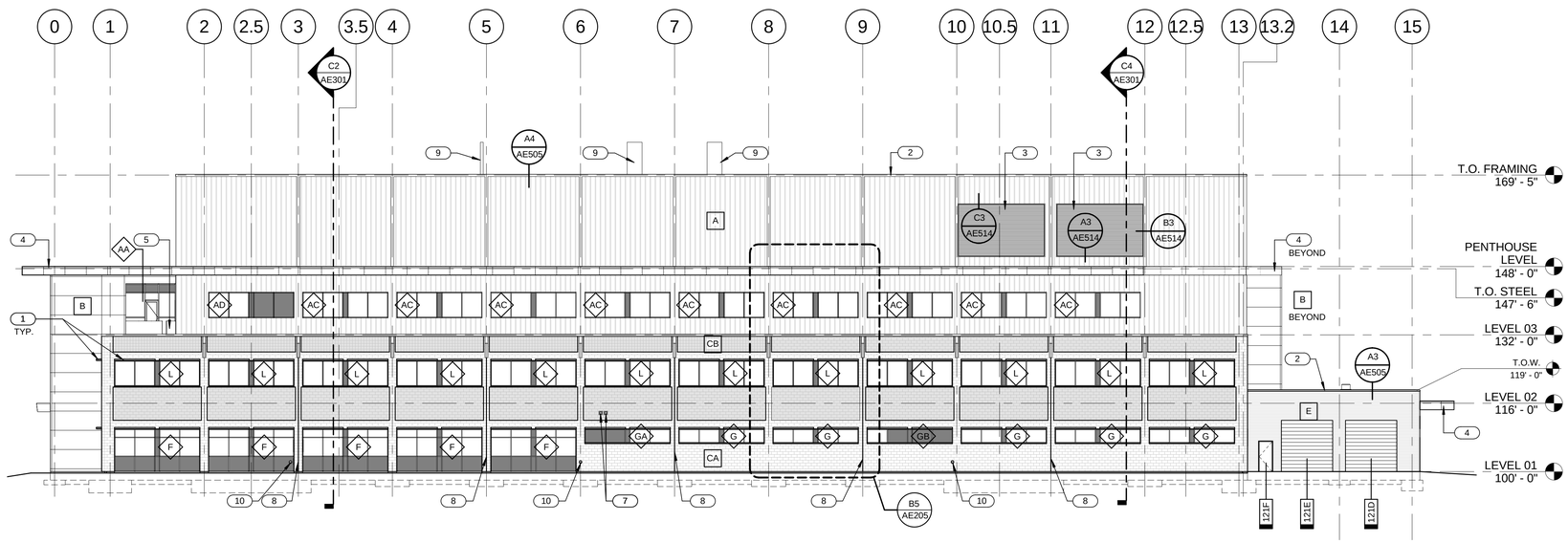

SOUTH ELEVATION (C4 / AE202)
1/16" = 1'-0"

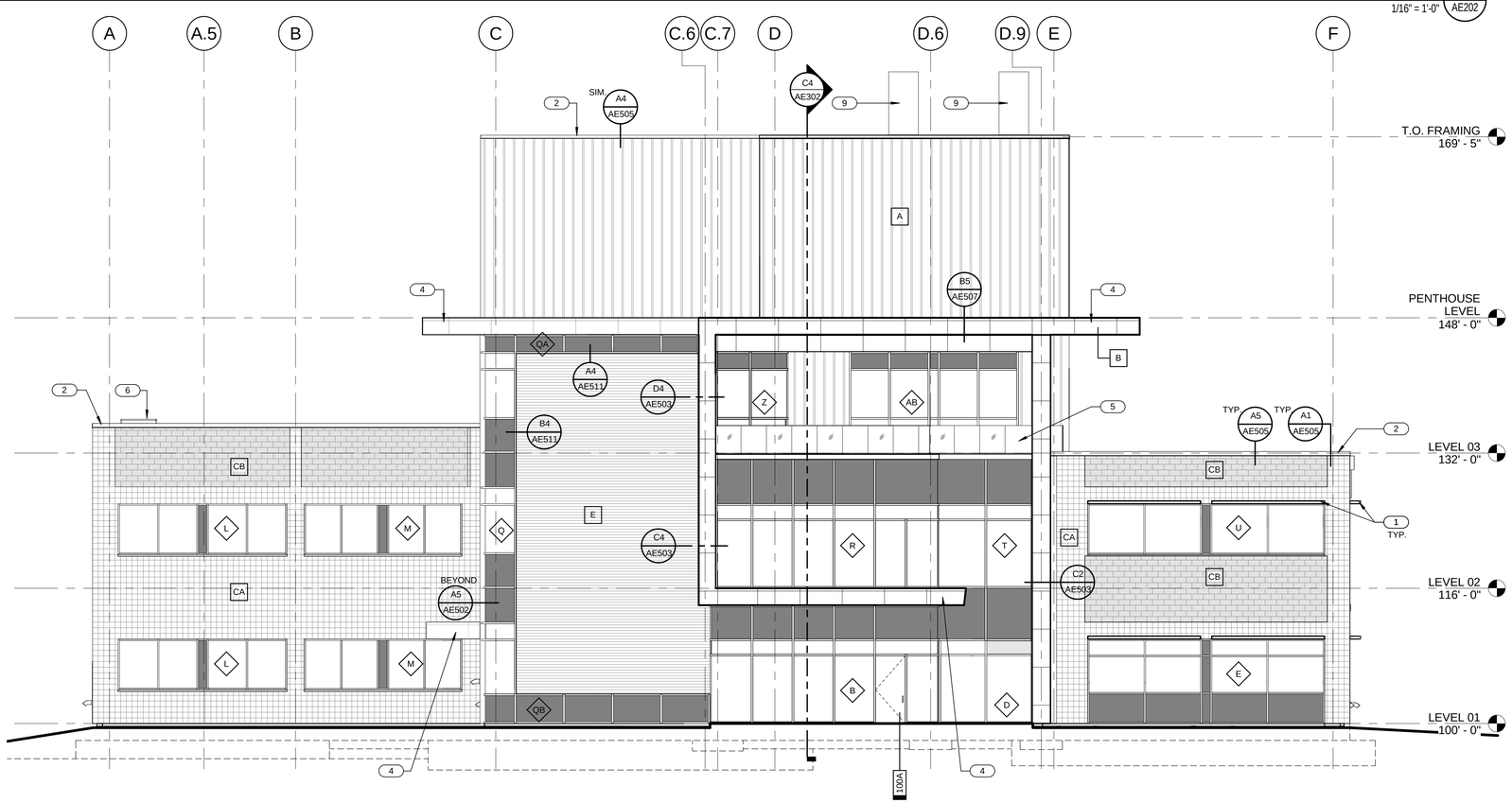

WEST ELEVATION (A4 / AE202)
1/8" = 1'-0"

GENERAL NOTES

- GENERAL CONTRACTOR SHALL FIELD VERIFY ALL CONDITIONS AND SHALL REPORT TO THE ARCHITECT ANY UNKNOWN CONDITIONS, ERRORS OR CONFLICTS IN THE DRAWINGS BEFORE BEGINNING WORK.
- DO NOT SCALE DRAWINGS.

METAL PANEL A	A		
METAL PANEL B	B		
METAL PANEL E	E		
CMU - A CA	CA		
CMU - B	CB	SET THIS PANEL 1" PROUD OF PANEL CA	
CMU - C	CC	GRAY TO MATCH EXISTING	
CMU - D	CD	TAN TO MATCH EXISTING	

KEYED NOTES

1 SUNSHADE.
2 PARAPET CAP FLASHING. SEE REFERENCED DETAIL.
3 MECHANICAL LOUVER. SEE MECHANICAL DRAWINGS.
4 METAL FASCIA.
5 GUARDRAIL.
6 SAFETY GUARDRAIL. SEE DETAIL C4/AE501.
7 DRYER VENT.
8 CONTROL JOINT.
9 EXHAUST FLUE. SEE MECHANICAL DRAWINGS.
10 DOWNSPOUT NOZZLE. SEE PLUMBING DRAWINGS.

CRSA
649 E. South Temple
Salt Lake City, UT 84102
801.355.5915

MWL
11798 N. Lakeridge Pkwy.
Ashland, VA 23005
804-228-7473

State of Utah
Department of Administrative Services
Division of Facilities Construction & Management
4110 State Office Building
Salt Lake City, Utah 84114
Phone: (801) 538 - 3018
Fax: (801) 538 - 3267

DIVISION OF FACILITIES CONSTRUCTION AND MANAGEMENT
REVIEWED FOR CODE COMPLIANCE
SIGNATURE: Ernie Galle
DATE: 08-05-2014

STATE OF UTAH #134096 MEHRDAD SAMIE LICENSED ARCHITECT
04.28.2014
ARCHITECT-ENGINEER STAMP

Unified State Laboratory Module 2
4451 South 2700 West, Taylorsville, UT 84118

DFCM #: 13020300
Project #: B13-024

DATE:	ISSUE TYPE:
APRIL 21, 2014	BID SET

CHECKED BY	J. NIELSEN
DRAWN BY	F. PITORE

EXTERIOR ELEVATIONS

AE202
VOLUME 1

C:\Users\fernando\Documents_A_13024_Modli_2013_fernando.rvt
7/14/2014 12:30:34 PM

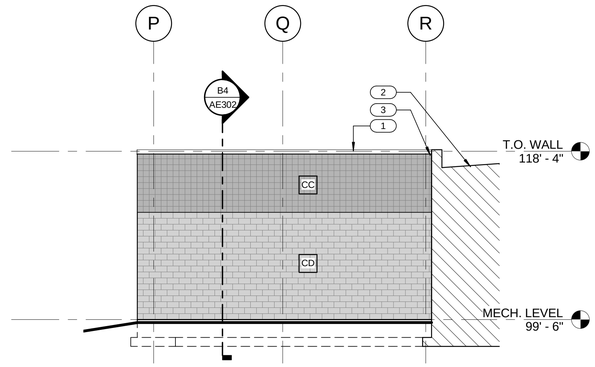

NORTH ELEVATION (C4 / AE203)
1/8" = 1'-0"

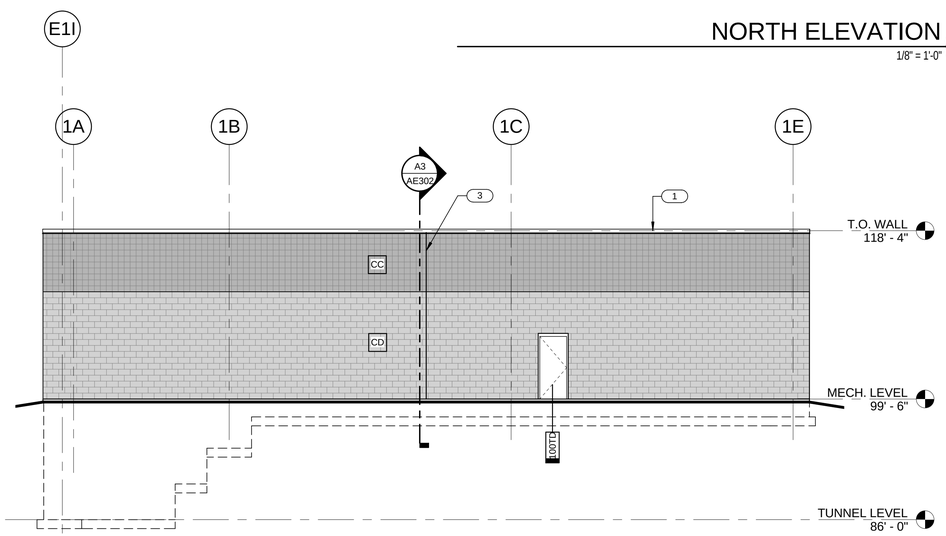

EAST ELEVATION (B4 / AE203)
1/8" = 1'-0"

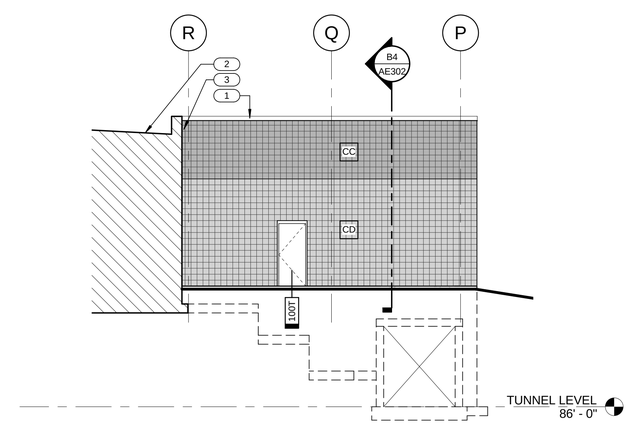

SOUTH ELEVATION (A4 / AE203)
1/8" = 1'-0"

GENERAL NOTES

- GENERAL CONTRACTOR SHALL FIELD VERIFY ALL CONDITIONS AND SHALL REPORT TO THE ARCHITECT ANY UNKNOWN CONDITIONS, ERRORS OR CONFLICTS IN THE DRAWINGS BEFORE BEGINNING WORK.
- DO NOT SCALE DRAWINGS.

METAL PANEL A	A	
METAL PANEL B	B	
METAL PANEL E	E	
CMU - A CA	CA	
CMU - B	CB	SET THIS PANEL 1" PROUD OF PANEL CA
CMU - C	CC	GRAY TO MATCH EXISTING
CMU - D	CD	TAN TO MATCH EXISTING

KEYED NOTES

1 PARAPET CAP FLASHING. SEE REFERENCED DETAIL.
2 EXISTING BUILDING.
3 CONTROL JOINT.

CRSA
649 E. South Temple
Salt Lake City, UT 84102
801.355.5915

MWL
11798 N. Lakeridge Pkwy.
Ashland, VA 23005
804-228-7473

State of Utah
Department of Administrative Services
Division of Facilities Construction & Management
4110 State Office Building
Salt Lake City, Utah 84114
Phone: (801) 538 - 3018
Fax: (801) 538 - 3267

DIVISION OF FACILITIES CONSTRUCTION AND MANAGEMENT
REVIEWED FOR CODE COMPLIANCE
SIGNATURE: Ernie Calle
DATE: 08-05-2014

STATE OF UTAH #134096 MEHRDAD SAMIE LICENSED ARCHITECT
04.28.2014
ARCHITECT-ENGINEER STAMP

Unified State Laboratory Module 2
4451 South 2700 West, Taylorsville, UT 84118

DFCM #: 13020300
Project #: B13-024

DATE:	ISSUE TYPE:
APRIL 21, 2014	BID SET

CHECKED BY	J. NIELSEN
DRAWN BY	F. PITORE

EXTERIOR ELEVATIONS

AE203
VOLUME 1

C:\Users\fernando\Documents_A_13024_Modit_2013_fernando.rvt
7/14/2014 12:30:48 PM

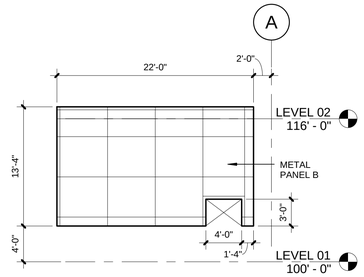

ELEV. A

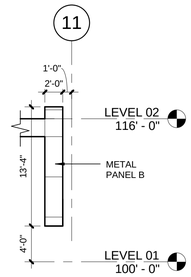

ELEV. B

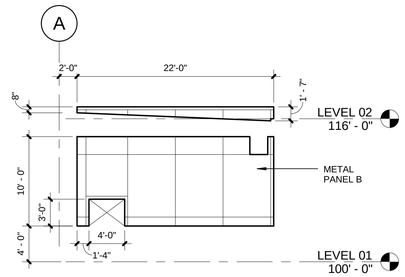

ELEV. C

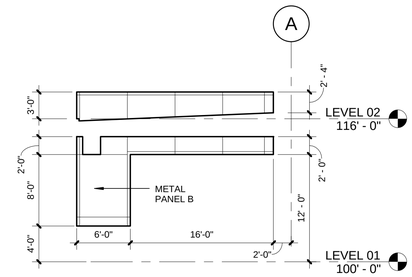

ELEV. D

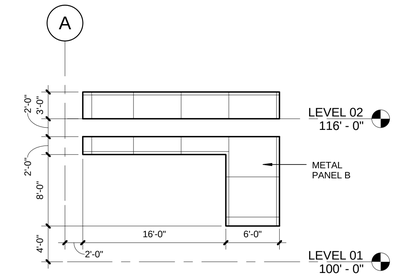

ELEV. E

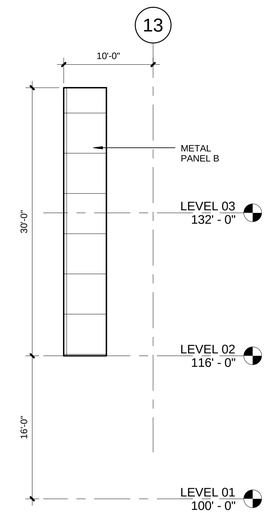

ELEV. F

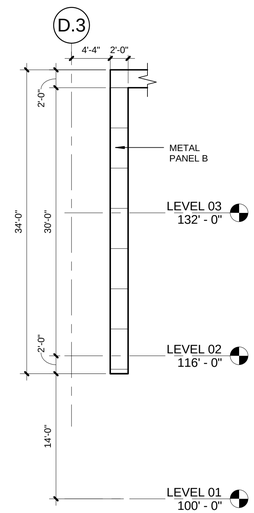

ELEV. G

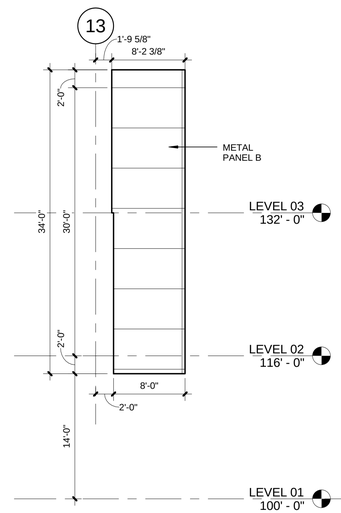

ELEV. H

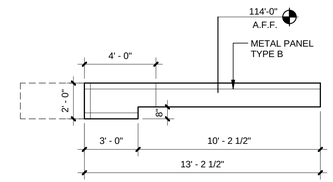

ELEV. U

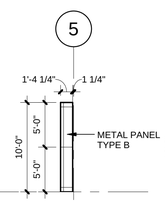

ELEV. Q

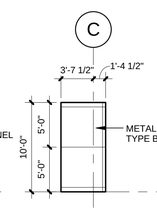

ELEV. R

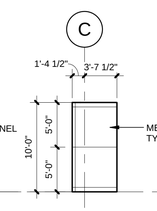

ELEV. S

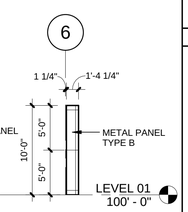

ELEV. T

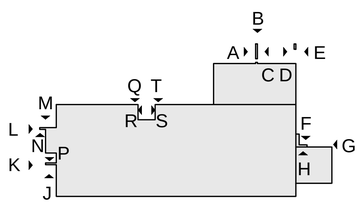

KEY PLAN

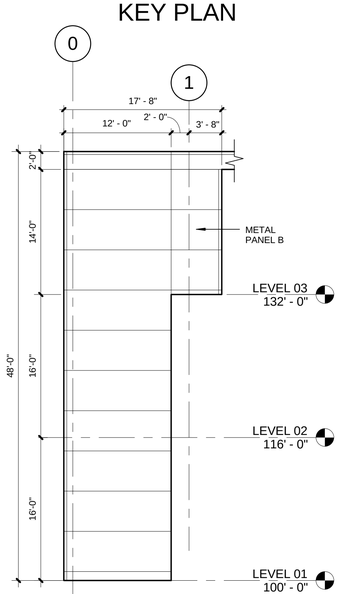

ELEV. J

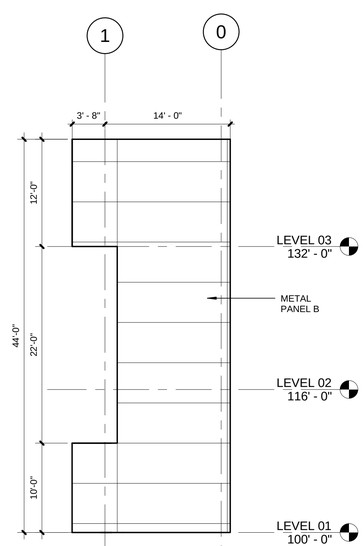

ELEV. P

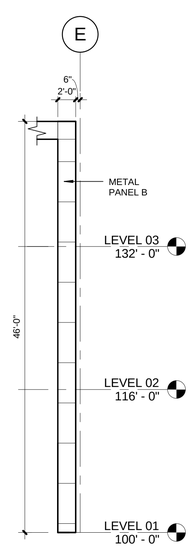

ELEV. K

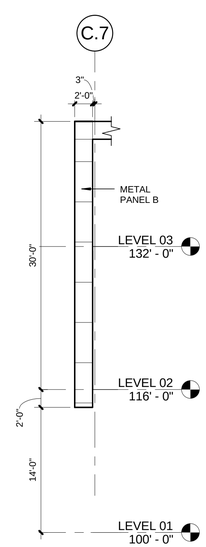

ELEV. L

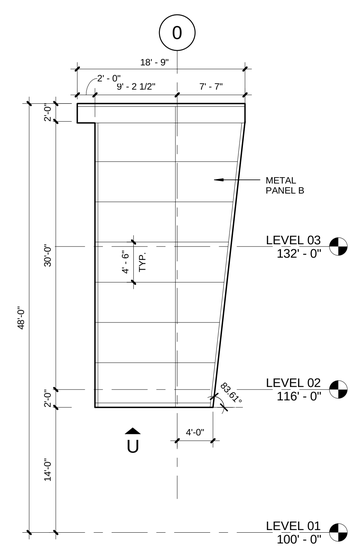

ELEV. M

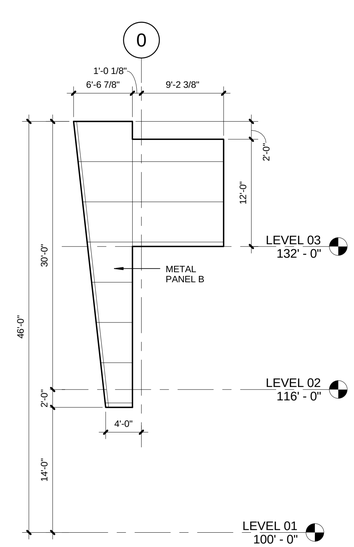

ELEV. N

PANEL ELEVATIONS

1/8" = 1'-0"

A5
AE204

CRSA

649 E. South Temple
Salt Lake City, UT 84102
801.355.5915

MWL

11798 N. Lakeridge Pkwy.
Ashland, VA 23005
804-228-7473

State of Utah
Department of Administrative Services

Division of Facilities Construction & Management
4110 State Office Building
Salt Lake City, Utah 84114
Phone: (801) 538 - 3018
Fax: (801) 538 - 3267

DIVISION OF FACILITIES CONSTRUCTION AND MANAGEMENT
REVIEWED FOR CODE COMPLIANCE
SIGNATURE: Ernie Cate
DATE: 08-05-2014

STATE OF UTAH #134096 MEHRDAD SAMII LICENSED ARCHITECT
04-28-2014
ARCHITECT-ENGINEER STAMP

Unified State Laboratory Module 2

4451 South 2700 West, Taylorsville, UT 84118

DFCM #: 13020300

Project #: B13-024

DATE:	ISSUE TYPE:
APRIL 21, 2014	BID SET
CHECKED BY	J. NIELSEN
DRAWN BY	F. PITORE

ENLARGED ELEVATIONS

AE204

VOLUME 1

C:\Users\fernando\Documents_A_13024_Modil_2013_fernando.rvt
7/14/2014 12:31:09 PM

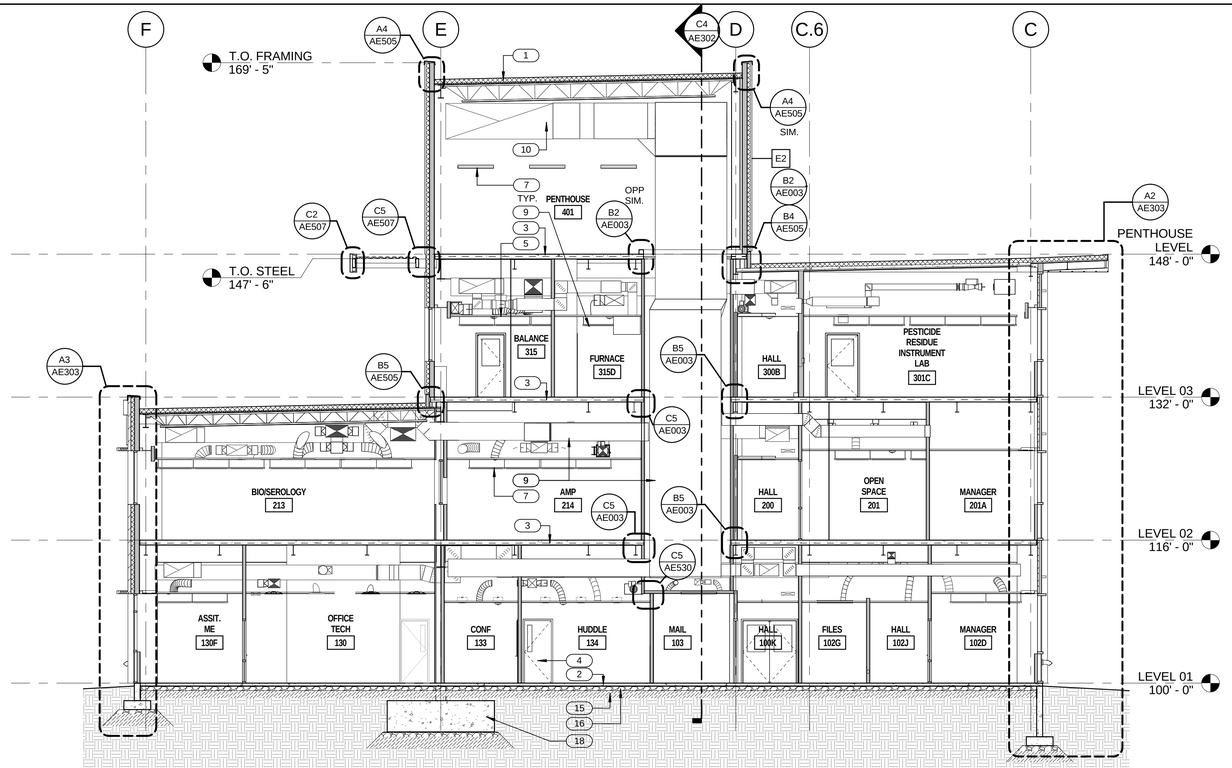

BUILDING SECTION C2 AE301
1/8" = 1'-0"

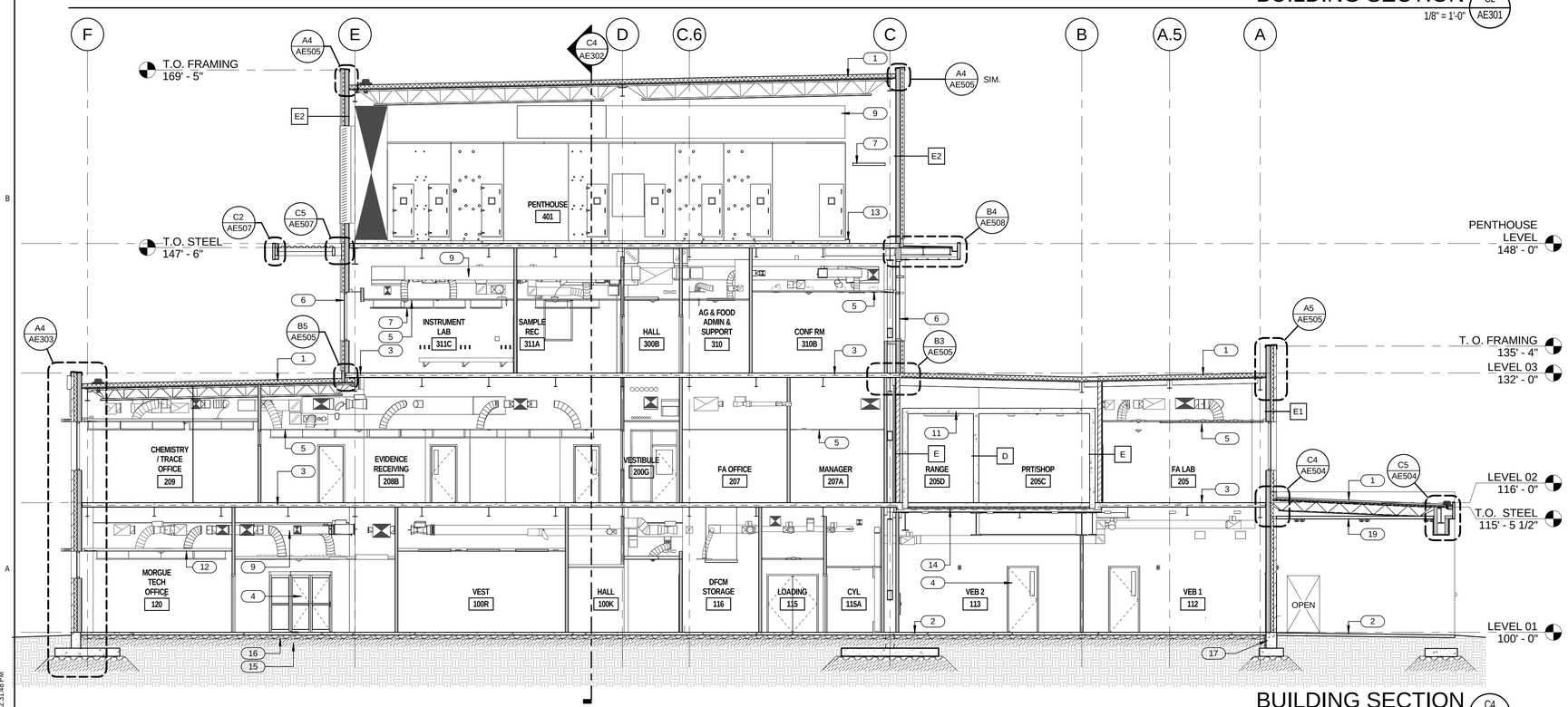

BUILDING SECTION C4 AE301
1/8" = 1'-0"

GENERAL NOTES

- GENERAL CONTRACTOR SHALL FIELD VERIFY ALL CONDITIONS AND SHALL REPORT TO THE ARCHITECT ANY UNKNOWN CONDITIONS, ERRORS OR CONFLICTS IN THE DRAWINGS BEFORE BEGINNING WORK.
- DO NOT SCALE DRAWINGS.

KEYED NOTES

1 ROOF ASSEMBLY. SEE ROOF TYPES.
2 30" CLEAR AREA.
3 CONCRETE SLAB ON DECK. SEE STRUCTURAL.
4 DOOR. SEE DOOR SCHEDULE.
5 LAY-IN CEILING . SEE CEILING PLANS.
6 ALUM. STOREFRONT SYSTEM. SEE WINDOW TYPES.
7 LIGHT FIXTURE. SEE ELECTRICAL DRAWINGS.
8 ROOF ANCHOR @ 6'-8" O.C. SEE DETAIL C5/AE501.
9 MECHANICAL DUCT. SEE MECHANICAL DRAWINGS.
10 MECHANICAL EQUIPMENT. SEE MECHANICAL DRAWINGS
11 CONCRETE GUN RANGE ENCLOSURE. SEE STRUCTURAL & IL SHEETS
12 GYP. BD. CEILING. SEE CEILING PLAN.
13 6" CONCRETE HOUSEKEEPING PAD. COORDINATE SIZE & PLACEMENT WITH MECHANICAL EQUIPMENT. SEE FINISH SCHEDULE.
14 INSULATED SLAB ON METAL DECK. SEE STRUCTURAL & IL SHEETS.
15 12" STRUCTURAL FILL. SEE GEOTECH REPORT.
16 4" FREE DRAINING GRAVEL.
17 2" RIGID PERIMETER INSULATION
18 REINFORCED CONCRETE FOOTING. SEE STRUCTURAL.
19 METAL SOFFIT. SEE CEILING PLAN.

CRSA
649 E. South Temple
Salt Lake City, UT 84102
801.355.5915

MWL
11798 N. Lakeridge Pkwy.
Ashland, VA 23005
804-228-7473

State of Utah
Department of Administrative Services
Division of Facilities Construction & Management
4110 State Office Building
Salt Lake City, Utah 84114
Phone: (801) 538 - 3018
Fax: (801) 538 - 3267

DIVISION OF FACILITIES CONSTRUCTION AND MANAGEMENT
REVIEWED FOR CODE COMPLIANCE
SIGNATURE: Ernie Gale
DATE: 08-05-2014

STATE OF UTAH #134096 MEHRDAD SAMII LICENSED ARCHITECT
04.28.2014
ARCHITECT-ENGINEER STAMP

Unified State Laboratory Module 2

4451 South 2700 West, Taylorsville, UT 84118

DFCM #: 13020300
Project #: B13-024

DATE:	ISSUE TYPE:
APRIL 21, 2014	BID SET

CHECKED BY: J. NIELSEN
DRAWN BY: F. PITORE

BUILDING SECTION

AE301

VOLUME 1

C:\Users\fernando\Documents_A_13024_Modli_2013_fernando.rvt
7/14/2014 12:31:48 PM

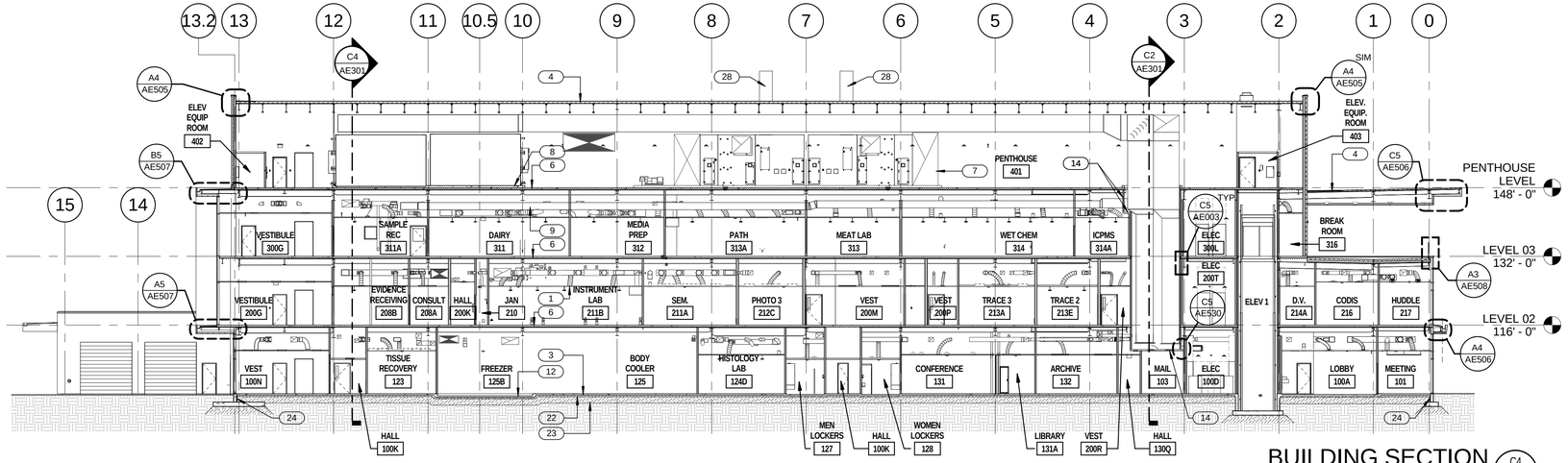

BUILDING SECTION C4 AE302
1/16" = 1'-0"

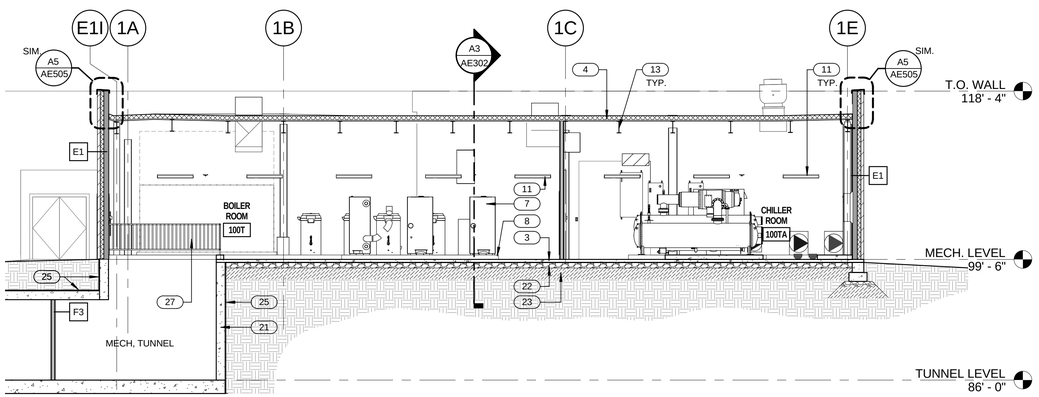

BUILDING SECTION B4 AE302
1/8" = 1'-0"

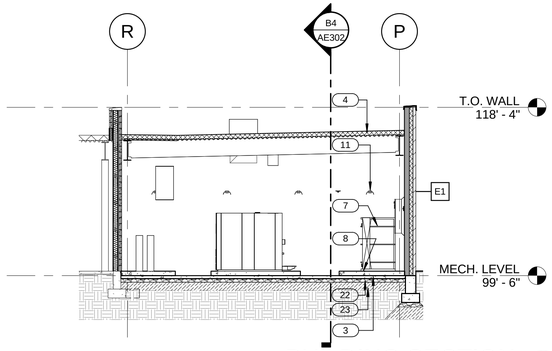

BUILDING SECTION A3 AE302
1/8" = 1'-0"

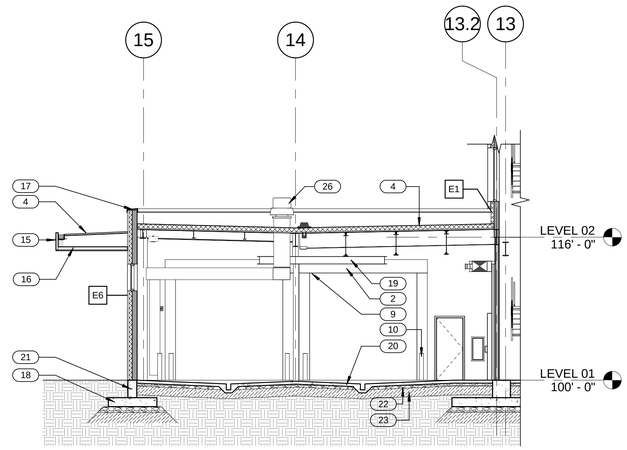

BUILDING SECTION A4 AE302
1/8" = 1'-0"

GENERAL NOTES

- GENERAL CONTRACTOR SHALL FIELD VERIFY ALL CONDITIONS AND SHALL REPORT TO THE ARCHITECT ANY UNKNOWN CONDITIONS, ERRORS OR CONFLICTS IN THE DRAWINGS BEFORE BEGINNING WORK.
- DO NOT SCALE DRAWINGS.

KEYED NOTES

1 LAY-IN CEILING . SEE CEILING PLANS.
2 DOOR. SEE DOOR SCHEDULE.
3 30" CLEAR AREA.
4 ROOF ASSEMBLY. SEE ROOF TYPES.
5 ALUM. STOREFRONT SYSTEM. SEE WINDOW TYPES.
6 CONCRETE SLAB ON DECK. SEE STRUCTURAL.
7 MECHANICAL EQUIPMENT. SEE MECHANICAL DRAWINGS
8 6" CONCRETE HOUSEKEEPING PAD. COORDINATE SIZE & PLACEMENT WITH MECHANICAL EQUIPMENT. SEE FINISH SCHEDULE.
9 MECHANICAL DUCT. SEE MECHANICAL DRAWINGS.
10 BOLLARD. SEE DETAIL 16/C401.
11 LIGHT FIXTURE. SEE ELECTRICAL DRAWINGS.
12 DEPRESSED SLAB. SEE SLAB EDGE PLAN.
13 STEEL BEAM. PAINT WHERE EXPOSED. SEE STRUCTURAL.
14 FIRE RATED BOTTOM OF SHAFT. SEE C5/AE530
15 METAL FASCIA.
16 METAL SOFFIT. SEE CEILING PLAN.
17 METAL WALL COPING.
18 REINFORCED CONCRETE FOOTING. SEE STRUCTURAL.
19 HOIST RAIL.
20 CONCRETE SLAB ON GRADE. SEE STRUCTURAL.
21 REINFORCED CONCRETE FOUNDATION WALL. SEE STRUCTURAL.
22 4" FREE DRAINING GRAVEL.
23 12" STRUCTURAL FILL. SEE GEOTECH REPORT.
24 2" RIGID PERIMETER INSULATION
25 FLUID APPLIED WATER PROOFING WITH DRAINAGE MAT, TOP, SIDES, AND FOOTINGS
26 EXHAUST FAN. SEE MECHANICAL DRAWINGS.
27 REMOVABLE GUARDRAIL. SEE A3/AE550.
28 EXHAUST FLUE. SEE MECHANICAL DRAWINGS.

CRSA
649 E. South Temple
Salt Lake City, UT 84102
801.355.5915

MWL
11798 N. Lakeridge Pkwy.
Ashland, VA 23005
804-228-7473

State of Utah
Department of Administrative Services
Division of Facilities Construction & Management
4110 State Office Building
Salt Lake City, Utah 84114
Phone: (801) 538 - 3018
Fax: (801) 538 - 3267

DIVISION OF FACILITIES CONSTRUCTION AND MANAGEMENT
REVIEWED FOR CODE COMPLIANCE
SIGNATURE: Ernie Gelfe
DATE: 08-05-2014

STATE OF UTAH #134096 MEHRDAD SAMIE LICENSED ARCHITECT
04-28-2014
ARCHITECT-ENGINEER STAMP

Unified State Laboratory Module 2
4451 South 2700 West, Taylorsville, UT 84118

DFCM #: 13020300
Project #: B13-024

DATE:	ISSUE TYPE:
APRIL 21, 2014	BID SET
CHECKED BY	J. NIELSEN
DRAWN BY	F. PITORE

BUILDING SECTION

AE302
VOLUME 1

C:\Users\fernando\Documents_A_13024_Modil_2013_fernando.rvt
7/14/2014 12:32:27 PM

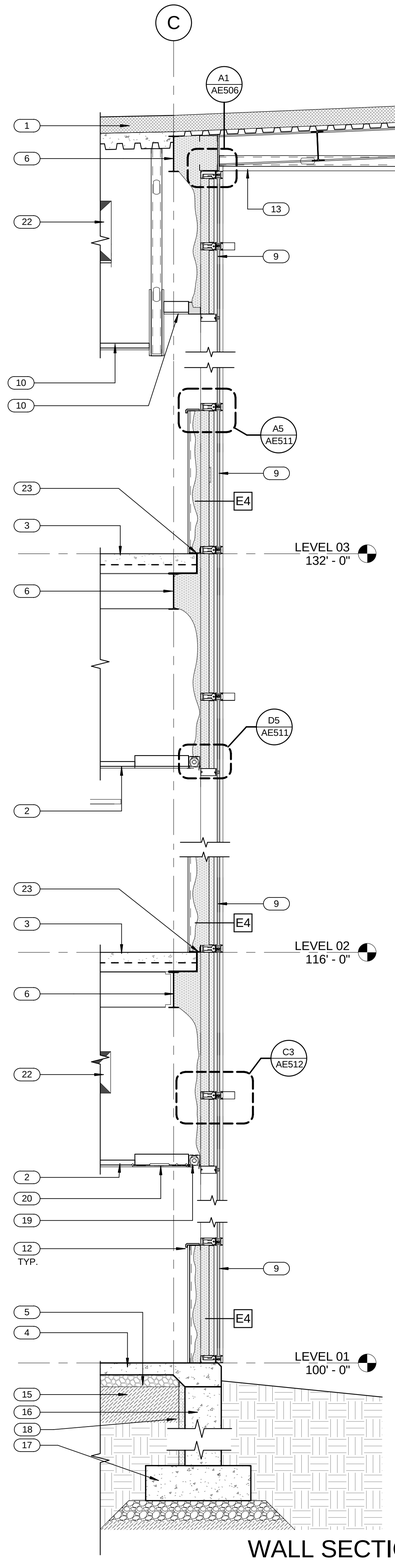

WALL SECTION A2 AE303
1/2" = 1'-0"

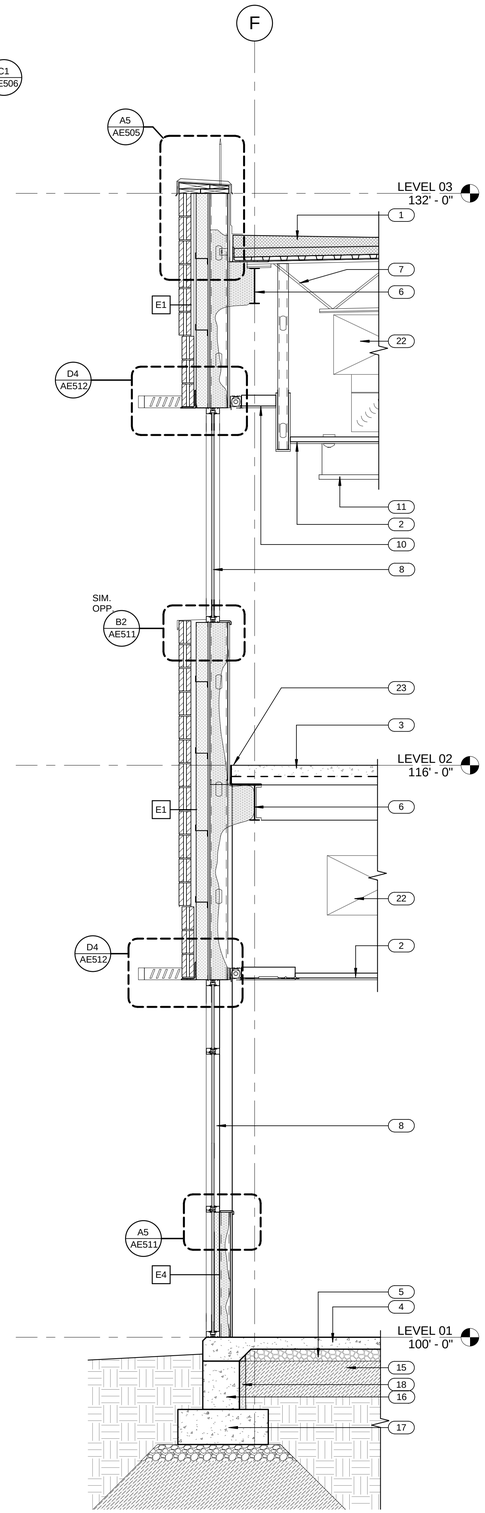

WALL SECTION A3 AE303
1/2" = 1'-0"

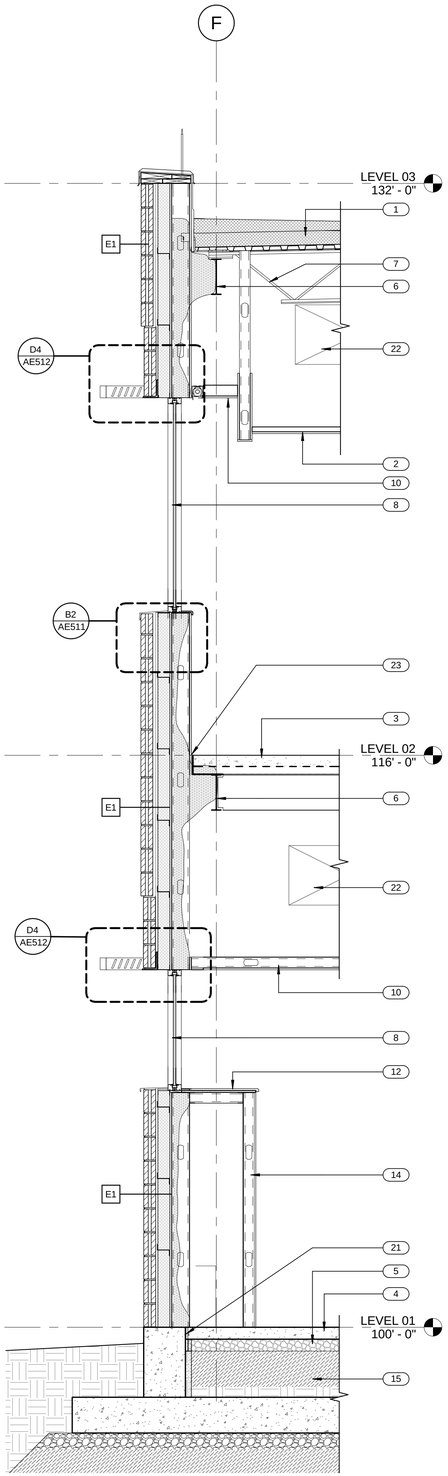

WALL SECTION A4 AE303
1/2" = 1'-0"

GENERAL NOTES

- GENERAL CONTRACTOR SHALL FIELD VERIFY ALL CONDITIONS AND SHALL REPORT TO THE ARCHITECT ANY UNKNOWN CONDITIONS, ERRORS OR CONFLICTS IN THE DRAWINGS BEFORE BEGINNING WORK.
- DO NOT SCALE DRAWINGS.

KEYED NOTES

1 ROOF ASSEMBLY. SEE ROOF TYPES.
2 LAY-IN CEILING . SEE CEILING PLANS.
3 CONCRETE SLAB ON DECK. SEE STRUCTURAL.
4 30" CLEAR AREA.
5 4" FREE DRAINING GRAVEL.
6 STEEL BEAM. PAINT WHERE EXPOSED. SEE STRUCTURAL.
7 STEEL JOIST. PAINT WHERE EXPOSED. SEE STRUCTURAL.
8 ALUM. STOREFRONT SYSTEM. SEE WINDOW TYPES.
9 CURTAIN WALL SYSTEM. SEE WINDOW TYPES.
10 GYP. BD. CEILING. SEE CEILING PLAN.
11 LIGHT FIXTURE. SEE ELECTRICAL DRAWINGS.
12 WINDOW SILL. SEE FINISH LEGEND.
13 METAL SOFFIT. SEE CEILING PLAN.
14 FURR WALL WITH WALL TYPE H. SEE FINISH PLANS FOR FINISH.
15 12" STRUCTURAL FILL. SEE GEOTECH REPORT.
16 REINFORCED CONCRETE FOUNDATION WALL. SEE STRUCTURAL.
17 REINFORCED CONCRETE FOOTING. SEE STRUCTURAL.
18 2" RIGID PERIMETER INSULATION
19 ROLLER WINDOW SHADES TYP. ALL EXTERIOR WINDOWS. REFER TO ACCESSORY SCHEDULE. SEE SPECS.
20 RADIANT CEILING PANEL. SEE MECHANICAL DRAWINGS.
21 EXPANSION JOINT.
22 MECHANICAL DUCT. SEE MECHANICAL DRAWINGS.
23 FIRE STOPPING. SEE AVAILABLE UL ASSEMBLIES SHOWN ON GF006-010.

CRSA
649 E. South Temple
Salt Lake City, UT 84102
801.355.5915

MWL
11798 N. Lakeridge Pkwy.
Ashland, VA 23005
804-228-7473

State of Utah
Department of Administrative Services
Division of Facilities Construction & Management
4110 State Office Building
Salt Lake City, Utah 84114
Phone: (801) 538 - 3018
Fax: (801) 538 - 3267

DIVISION OF FACILITIES CONSTRUCTION AND MANAGEMENT
REVIEWED FOR CODE COMPLIANCE
SIGNATURE: Ernie Calle
DATE: 08-05-2014

STATE OF UTAH #134096 MEHRDAD SAMIE LICENSED ARCHITECT
04-28-2014
ARCHITECT-ENGINEER STAMP

Unified State Laboratory Module 2
4451 South 2700 West, Taylorsville, UT 84118

DFCM #: 13020300
Project #: B13-024

DATE:	ISSUE TYPE:
APRIL 21, 2014	BID SET
CHECKED BY	J. NIELSEN
DRAWN BY	F. PITORE

WALL SECTIONS

AE303
VOLUME 1

C:\Users\fernando\Documents_A_13024_Modil_2013_fernando.rvt
7/14/2014 12:32:43 PM

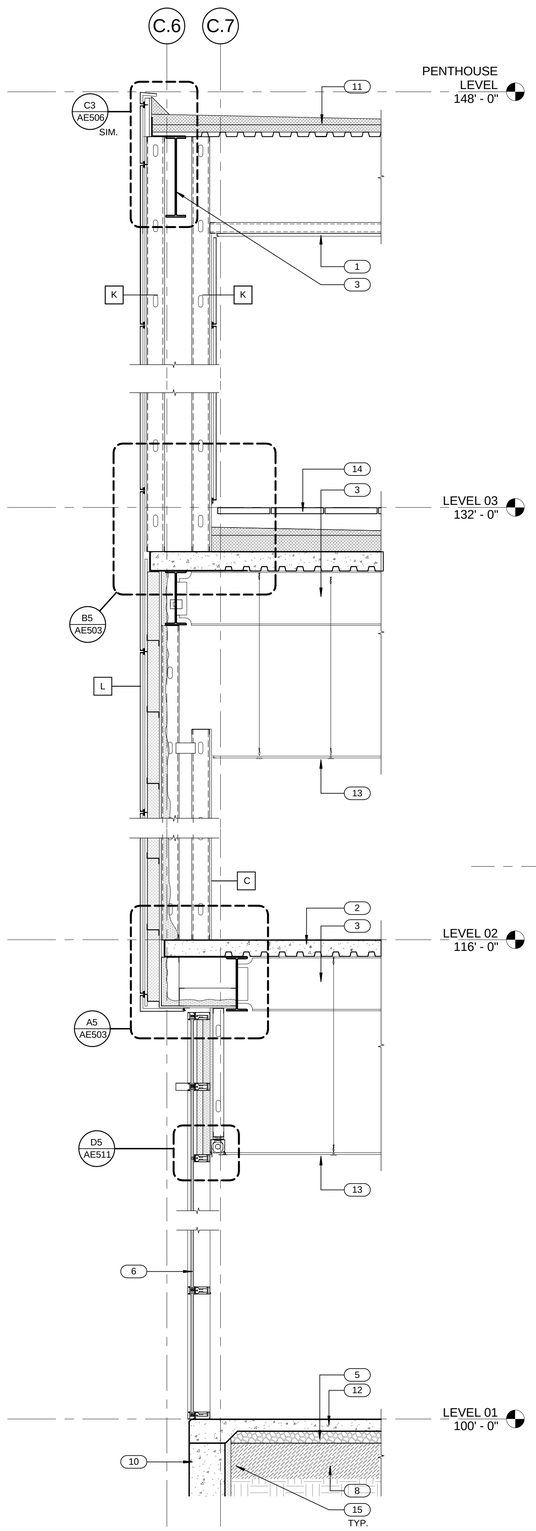

WALL SECTION (A1 / AE304)
1/2" = 1'-0"

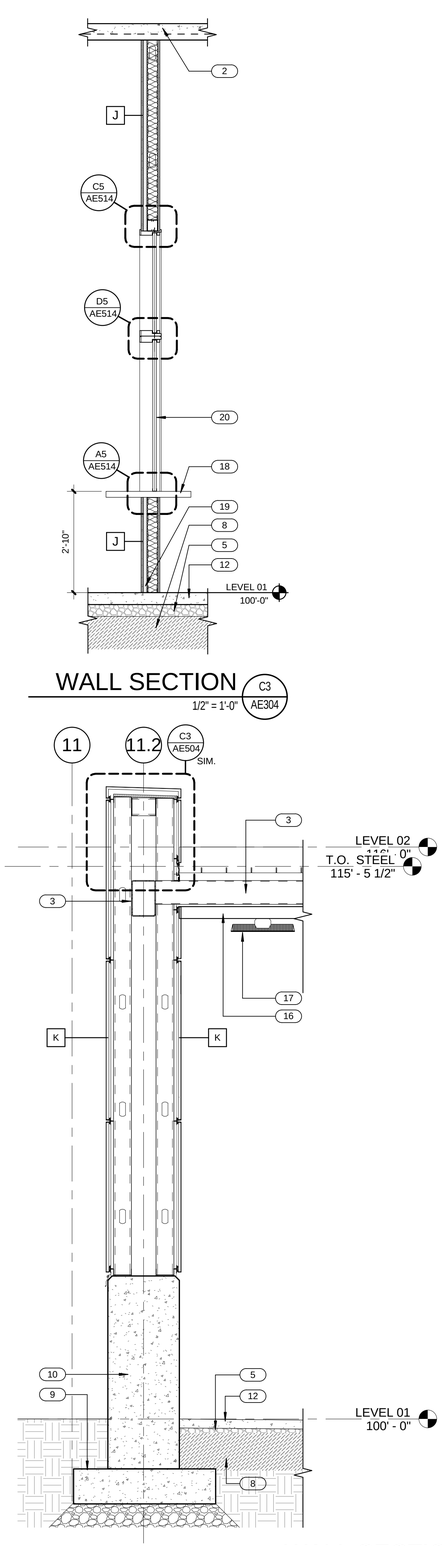

WALL SECTION (C3 / AE304)
1/2" = 1'-0"

WALL SECTION (A3 / AE304)
1/2" = 1'-0"

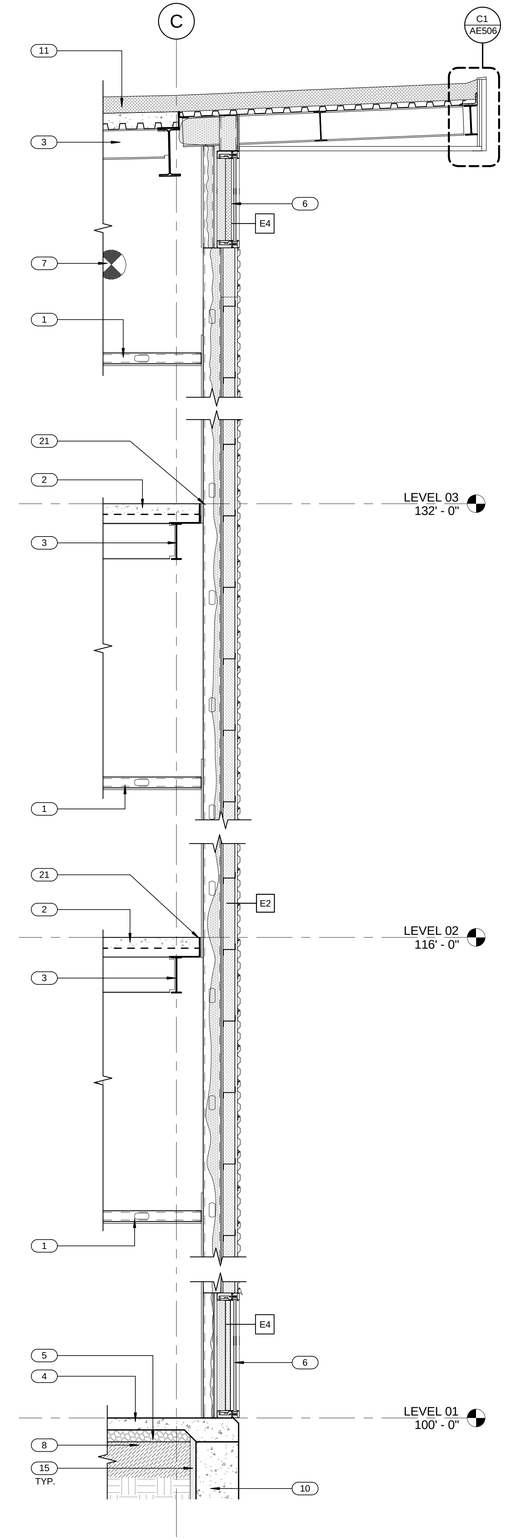

WALL SECTION (A4 / AE304)
1/2" = 1'-0"

GENERAL NOTES

- GENERAL CONTRACTOR SHALL FIELD VERIFY ALL CONDITIONS AND SHALL REPORT TO THE ARCHITECT ANY UNKNOWN CONDITIONS, ERRORS OR CONFLICTS IN THE DRAWINGS BEFORE BEGINNING WORK.
- DO NOT SCALE DRAWINGS.

KEYED NOTES

1 GYP. BD. CEILING. SEE CEILING PLAN.
2 CONCRETE SLAB ON DECK. SEE STRUCTURAL.
3 STEEL BEAM. PAINT WHERE EXPOSED. SEE STRUCTURAL.
4 30" CLEAR AREA.
5 4" FREE DRAINING GRAVEL.
6 CURTAIN WALL SYSTEM. SEE WINDOW TYPES.
7 MECHANICAL DUCT. SEE MECHANICAL DRAWINGS.
8 12" STRUCTURAL FILL. SEE GEOTECH REPORT.
9 REINFORCED CONCRETE FOOTING. SEE STRUCTURAL.
10 REINFORCED CONCRETE FOUNDATION WALL. SEE STRUCTURAL.
11 ROOF ASSEMBLY. SEE ROOF TYPES.
12 CONCRETE SLAB ON GRADE. SEE STRUCTURAL.
13 LAY-IN CEILING . SEE CEILING PLANS.
14 PAVERS. SEE SHEET AE/121.
15 2" RIGID PERIMETER INSULATION
16 SOFFIT. SEE CEILING PLANS
17 LIGHT FIXTURE. SEE ELECTRICAL DRAWINGS.
18 TRANSACTION COUNTER. SEE WINDOW TYPES.
19 INSTALL BULLET RESISTANT PANEL WITH FULL LOAD RESTING SECURELY AGAINST SLAB. ANCHOR TO PLATE AND WALL AS PER MANUFACTURER RECOMMENDATIONS.
20 BULLET RESISTANT GLAZING.
21 FIRE STOPPING. SEE AVAILABLE UL ASSEMBLIES SHOWN ON GF006-010.

CRSA
649 E. South Temple
Salt Lake City, UT 84102
801.355.5915

MWL
11798 N. Lakeridge Pkwy.
Ashland, VA 23005
804-228-7473

State of Utah
Department of Administrative Services
Division of Facilities Construction & Management
4110 State Office Building
Salt Lake City, Utah 84114
Phone: (801) 538 - 3018
Fax: (801) 538 - 3267

DIVISION OF FACILITIES CONSTRUCTION AND MANAGEMENT
REVIEWED FOR CODE COMPLIANCE
SIGNATURE: Ernie Gelfe
DATE: 08-05-2014

STATE OF UTAH #134096 MEHRDAD SAMIE LICENSED ARCHITECT
04.28.2014
ARCHITECT-ENGINEER STAMP

Unified State Laboratory Module 2
4451 South 2700 West, Taylorsville, UT 84118

DFCM #: 13020300
Project #: B13-024

DATE:	ISSUE TYPE:
APRIL 21, 2014	BID SET
CHECKED BY	J. NIELSEN
DRAWN BY	F. PITORE

WALL SECTIONS

AE304
VOLUME 1

C:\Users\fernando\Documents_A_13024_Modli_2013_fernando.rvt
7/14/2014 12:33:09 PM

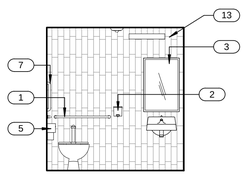

VIEW 1

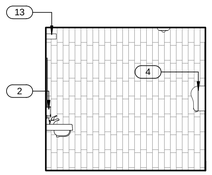

VIEW 2

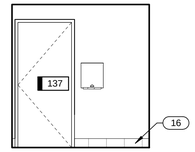

VIEW 3

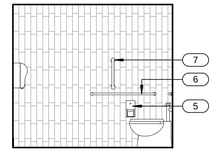

VIEW 4

TOILET ROOM #137/139 (D3 / AE401)

1/4" = 1'-0"

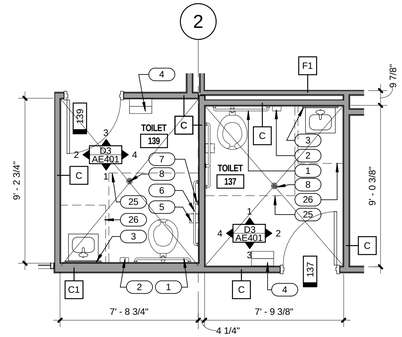

TOILET ROOM #137/139 (D4 / AE401)

1/4" = 1'-0"

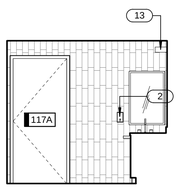

VIEW 5

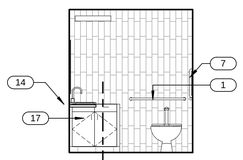

D5 / AE540

VIEW 6

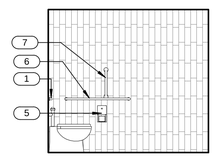

VIEW 7

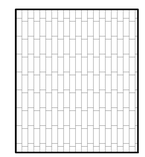

VIEW 8

TOILET 117A (C3 / AE401)

1/4" = 1'-0"

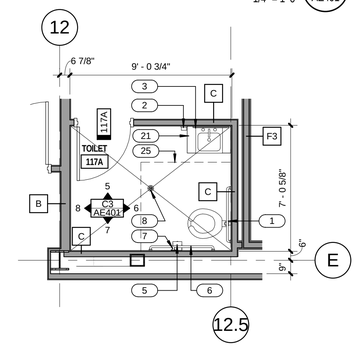

TOILET 117A (C4 / AE401)

1/4" = 1'-0"

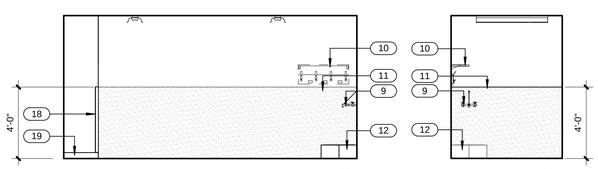

VIEW 9 VIEW 10

JAN ROOM 124E (B2 / AE401)

1/4" = 1'-0"

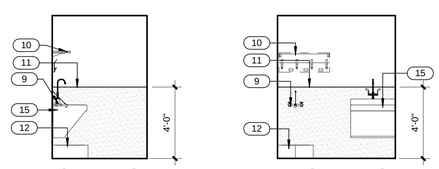

VIEW 12 VIEW 13

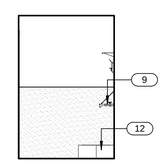

VIEW 14

JAN 122B (B3 / AE401)

1/4" = 1'-0"

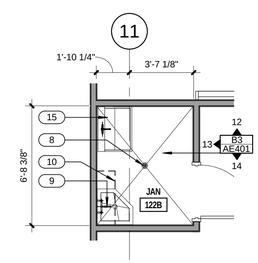

JAN 122B (B4 / AE401)

1/4" = 1'-0"

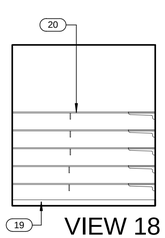

VIEW 18

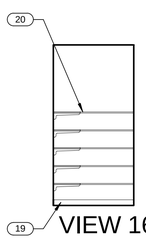

VIEW 16

CLOSET 200MB (A1 / AE401)

1/4" = 1'-0"

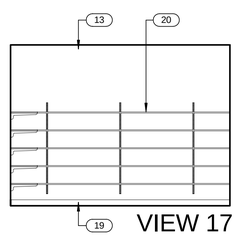

VIEW 17

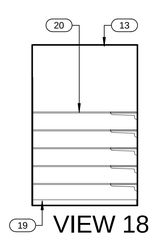

VIEW 18

STORAGE 208C (A2 / AE401)

1/4" = 1'-0"

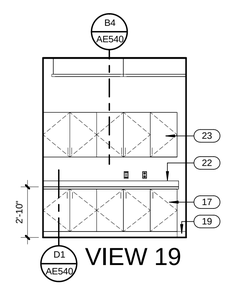

VIEW 19

CHEMISTRY/TRACE 209 (A3 / AE401)

1/4" = 1'-0"

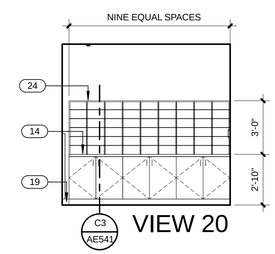

VIEW 20

ASSIST 102 (A4 / AE401)

1/4" = 1'-0"

GENERAL NOTES

- GENERAL CONTRACTOR SHALL FIELD VERIFY ALL CONDITIONS AND SHALL REPORT TO THE ARCHITECT ANY UNKNOWN CONDITIONS, ERRORS OR CONFLICTS IN THE DRAWINGS BEFORE BEGINNING WORK.
- DO NOT SCALE DRAWINGS.
- ITEMS SHOWN BY HIDDEN LINE ARE SPECIFIED BY OTHER SECTIONS.

ALL WALLS TO BE TYPE "A" U.N.O. ON PLAN — A

FIRE EXTINGUISHER — FE

KEYED NOTES

1 36" GRAB BAR. SEE ACCESSORY SCHEDULE.
2 SOAP DISPENSER. SEE ACCESSORY SCHEDULE.
3 MIRROR. SEE ACCESSORY SCHEDULE.
4 PAPER TOWEL DISPENSER. SEE ACCESSORY SCHEDULE.
5 TOILET PAPER DISPENSER. SEE ACCESSORY SCHEDULE.
6 42" GRAB BAR. SEE ACCESSORY SCHEDULE.
7 18" VERTICAL GRAB BAR. SEE ACCESSORY SCHEDULE.
8 FLOOR DRAIN. SLOPE FLOOR TO DRAIN AS SHOWN. SEE PLUMBING DRAWINGS.
9 FAUCET. SEE PLUMBING DRAWINGS.
10 MOP RACK. SEE ACCESSORY SCHEDULE.
11 FRP. SEE FINISH PLANS.
12 MOP SINK. SEE PLUMBING DRAWINGS.
13 LIGHT FIXTURE. SEE ELECTRICAL DRAWINGS.
14 COUNTERTOP. SEE INTERIOR ELEVATIONS.
15 SCRUB SINK. SEE PLUMBING DRAWINGS.
16 6" TILE BASE. ALIGN JOINTS WITH FLOOR TILE JOINTS AS REQUIRED. SEE FINISH LEGEND
17 BASE CABINET. SEE CASEWORK DETAILS.
18 STAINLESS STEEL CORNER GUARD. SEE SPECS.
19 BASE. SEE FINISH PLANS.
20 ADJUSTABLE SHELVING. SEE A3/AE540.
21 CASEWORK. SEE INTERIOR ELEVATIONS.
22 COUNTERTOP WITH INTEGRAL 4" HIGH BACKSPLASH. SEE CASEWORK DETAILS.
23 UPPER CABINET. SEE INTERIOR ELEVATIONS.
24 MAIL SLOTS. SEE INTERIOR ELEVATIONS.
25 56"X60" CLEAR AREA.
26 30" CLEAR AREA.

CRSA

649 E. South Temple
Salt Lake City, UT 84102
801.355.5915

MWL

11798 N. Lakeridge Pkwy.
Ashland, VA 23005
804-228-7473

State of Utah
Department of Administrative Services
Division of Facilities Construction & Management
4110 State Office Building
Salt Lake City, Utah 84114
Phone: (801) 538 - 3018
Fax: (801) 538 - 3267

DIVISION OF FACILITIES CONSTRUCTION AND MANAGEMENT
REVIEWED FOR CODE COMPLIANCE
SIGNATURE: Ernie Calle
DATE: 08-05-2014

STATE OF UTAH #134096 MEHRDAD SAMIE LICENSED ARCHITECT
04-28-2014
ARCHITECT-ENGINEER STAMP

Unified State Laboratory Module 2

4451 South 2700 West, Taylorsville, UT 84118

DFCM #: 13020300

Project #: B13-024

DATE:	ISSUE TYPE:
APRIL 21, 2014	BID SET
CHECKED BY	J. NIELSEN
DRAWN BY	F. PITORE

ENLARGED FLOOR PLANS & INTERIOR ELEVATIONS

AE401

VOLUME 1

C:\Users\fernando\Documents_A_13024_Modli_2013_fernando.rvt
7/14/2014 12:33:59 PM

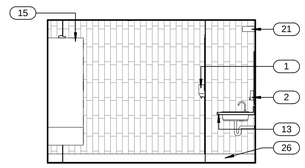

VIEW 1

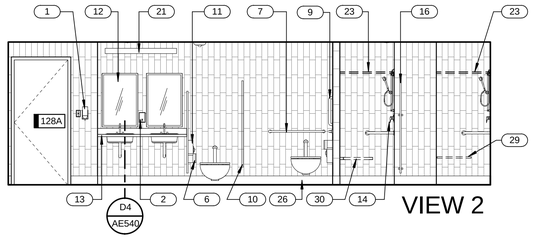

VIEW 2

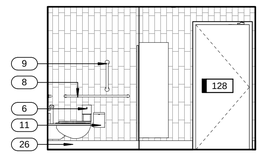

VIEW 3

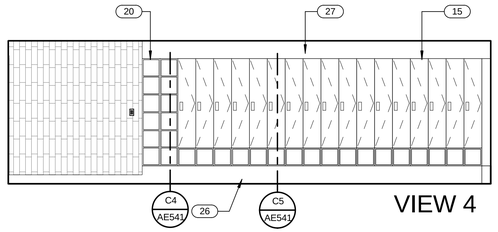

VIEW 4

WOMEN LOCKER ROOM 128 (C2 / AE402)

1/4" = 1'-0"

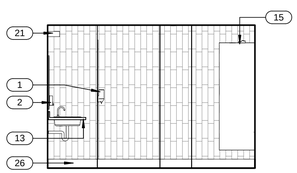

VIEW 5

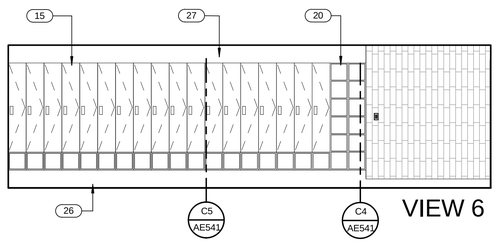

VIEW 6

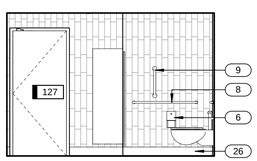

VIEW 7

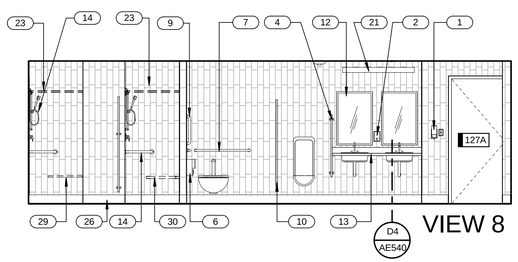

VIEW 8

MEN LOCKER ROOM 127 (B2 / AE402)

1/4" = 1'-0"

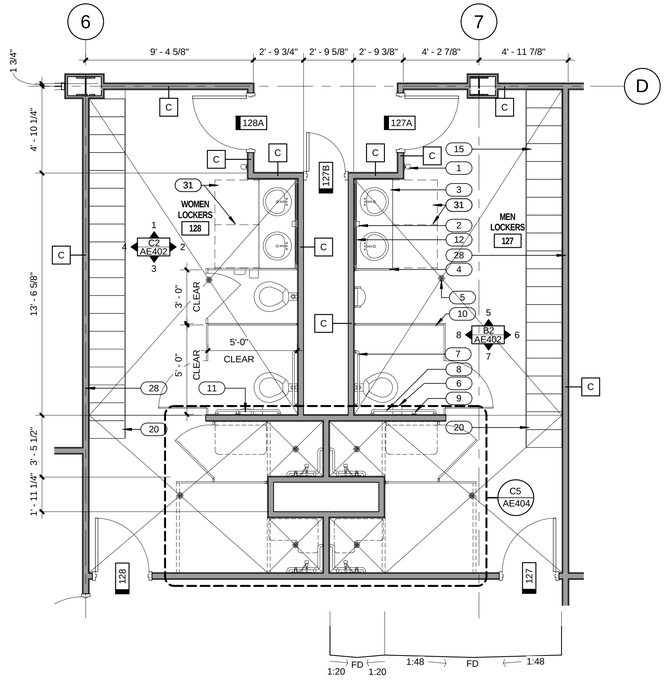

ACCESSIBLE FLOOR SECTION

LOCKER ROOMS 127 AND 128 (C4 / AE402)

1/4" = 1'-0"

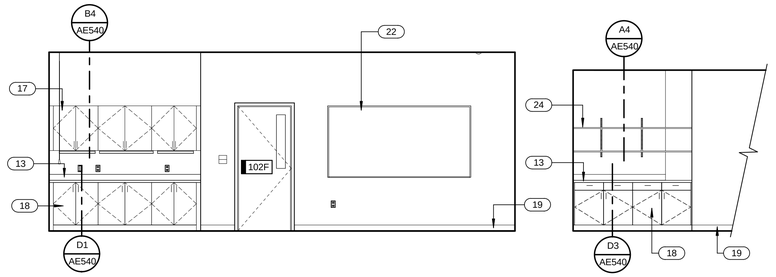

CONFERENCE 102F (B3 / AE402)

1/4" = 1'-0"

ARCHIVE 132 (B4 / AE402)

1/4" = 1'-0"

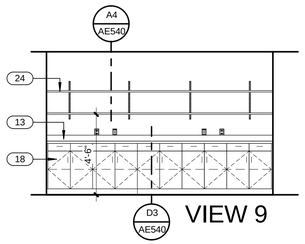

VIEW 9

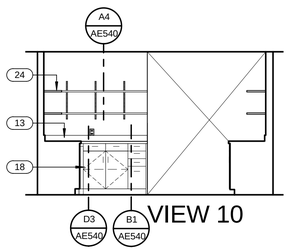

VIEW 10

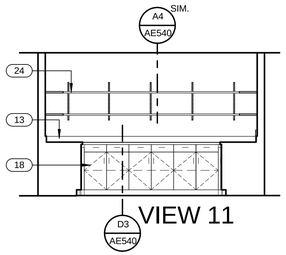

VIEW 11

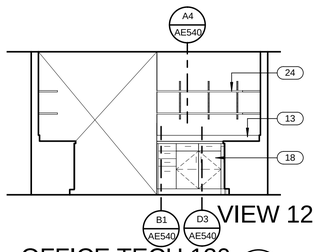

VIEW 12

OFFICE TECH 130 (A3 / AE402)

1/4" = 1'-0"

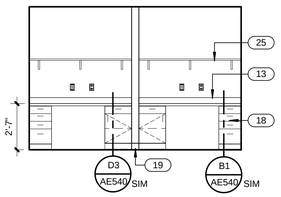

OFFICE TECH 130 (A4 / AE402)

1/4" = 1'-0"

GENERAL NOTES

- GENERAL CONTRACTOR SHALL FIELD VERIFY ALL CONDITIONS AND SHALL REPORT TO THE ARCHITECT ANY UNKNOWN CONDITIONS, ERRORS OR CONFLICTS IN THE DRAWINGS BEFORE BEGINNING WORK.
- DO NOT SCALE DRAWINGS.
- ITEMS SHOWN BY HIDDEN LINE ARE SPECIFIED BY OTHER SECTIONS.

ALL WALLS TO BE TYPE "A" U.N.O. ON PLAN — A

FIRE EXTINGUISHER — FE

KEYED NOTES

1 HAND SANITIZER DISPENSER. SEE ACCESSORY SCHEDULE.
2 SOAP DISPENSER. SEE ACCESSORY SCHEDULE.
3 CASEWORK. SEE IF DRAWINGS.
4 URINAL PARTITION. SEE SPECS.
5 FLOOR DRAIN. SLOPE FLOOR TO DRAIN AS SHOWN. SEE PLUMBING DRAWINGS.
6 TOILET PAPER DISPENSER. SEE ACCESSORY SCHEDULE.
7 36" GRAB BAR. SEE ACCESSORY SCHEDULE.
8 42" GRAB BAR. SEE ACCESSORY SCHEDULE.
9 18" VERTICAL GRAB BAR. SEE ACCESSORY SCHEDULE.
10 TOILET PARTITION. SEE SPECS.
11 SANITARY NAPKIN DISPOSAL. SEE ACCESSORY SCHEDULE.
12 MIRROR. SEE ACCESSORY SCHEDULE.
13 COUNTERTOP WITH INTEGRAL 4" HIGH BACKSPLASH. SEE CASEWORK DETAILS.
14 SHOWER FIXTURE. SEE SHOWER MOUNTING HEIGHTS ON SHEET AE004.
15 LOCKERS. SEE ACCESSORY SCHEDULE
16 SHOWER PARTITION. SEE SPEC AND FINISH SCHEDULE.
17 UPPER CABINET. SEE INTERIOR ELEVATIONS.
18 BASE CABINET. SEE CASEWORK DETAILS.
19 BASE. SEE FINISH PLANS.
20 CUBBIES. SEE INTERIOR ELEVATIONS.
21 LIGHT FIXTURE. SEE ELECTRICAL DRAWINGS.
22 WHITEBOARD. SEE ACCESSORY SCHEDULE.
23 SHOWER CURTAIN ROD. SEE ACCESSORY SCHEDULE.
24 ADJUSTABLE SHELVING. SEE A3/AE540.
25 SINGLE SHELF.
26 INTEGRAL COVE BASE.
27 5/8" GYP. BD. PAINT.
28 PROVIDE 3-5/8" 20 GA. @ 12" O.C. METAL STUDS ALONG THIS WALL.
29 ADA SHOWER BENCH. SEE SHOWER MOUNTING HEIGHTS ON SHEET AE004.
30 FOLDING SEAT. SEE ACCESSORY SCHEDULE.
31 30" CLEAR AREA.

CRSA
649 E. South Temple
Salt Lake City, UT 84102
801.355.5915

MWL
11798 N. Lakeridge Pkwy.
Ashland, VA 23005
804-228-7473

State of Utah
Department of Administrative Services
Division of Facilities Construction & Management
4110 State Office Building
Salt Lake City, Utah 84114
Phone: (801) 538 - 3018
Fax: (801) 538 - 3267

DIVISION OF FACILITIES CONSTRUCTION AND MANAGEMENT
REVIEWED FOR CODE COMPLIANCE
SIGNATURE: Ernie Gelfe
DATE: 08-05-2014

STATE OF UTAH #134096 MEHRDAD SAMIE LICENSED ARCHITECT
04-28-2014
ARCHITECT-ENGINEER STAMP

Unified State Laboratory Module 2
4451 South 2700 West, Taylorsville, UT 84118

DFCM #: 13020300
Project #: B13-024

DATE:	ISSUE TYPE:
APRIL 21, 2014	BID SET
CHECKED BY	J. NIELSEN
DRAWN BY	F. PITORE

ENLARGED FLOOR PLANS & INTERIOR ELEVATIONS

AE402
VOLUME 1

C:\Users\fernando\Documents_A_13024_Modil_2013_fernando.rvt
7/14/2014 12:34:24 PM

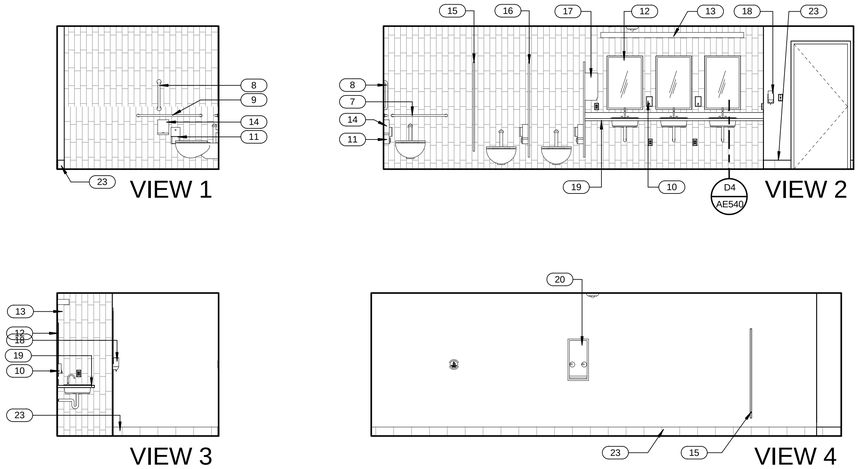

WOMEN'S RESTROOM C2 AE403
1/4" = 1'-0"

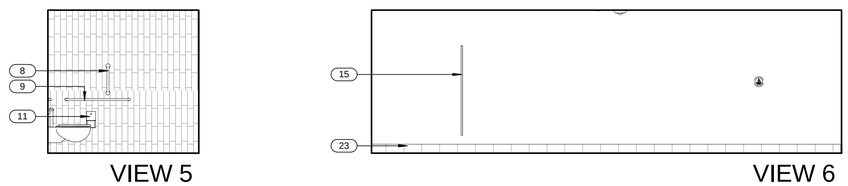

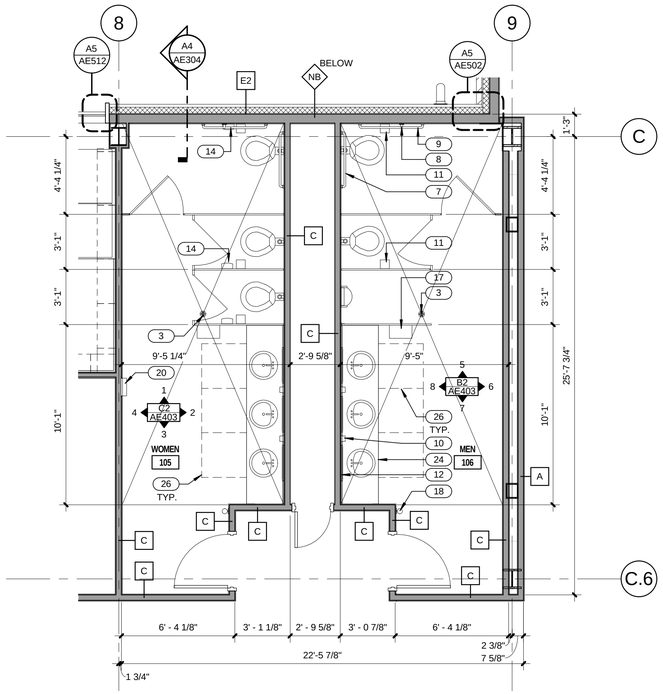

RESTROOMS ENLARGED PLAN C4 AE403
1/4" = 1'-0"

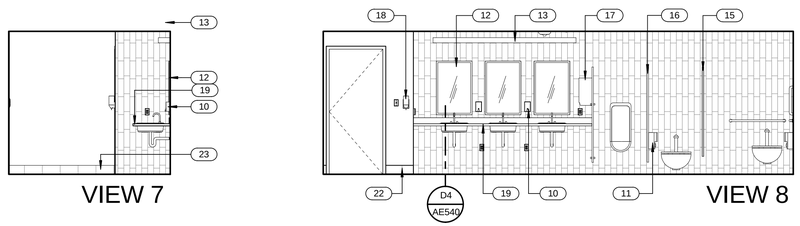

MEN'S RESTROOM B2 AE403
1/4" = 1'-0"

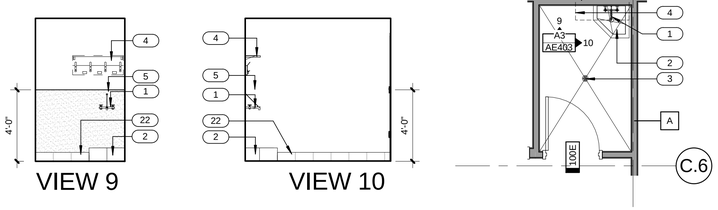

JANITOR 100E B3 AE403
1/4" = 1'-0"

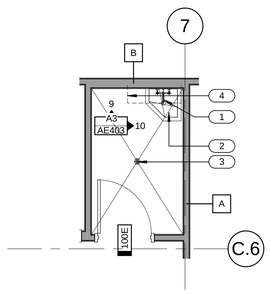

JAN 100E B4 AE403
1/4" = 1'-0"

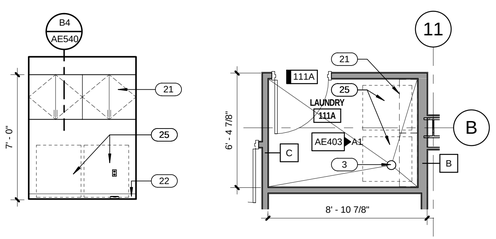

LAUNDRY 111A A1 AE403
1/4" = 1'-0"

LAUNDRY 111A A2 AE403
1/4" = 1'-0"

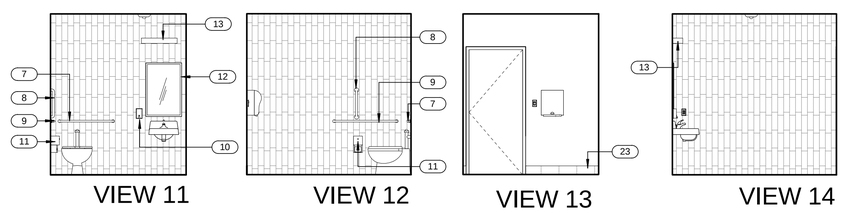

UNISEX ROOM 116A A3 AE403
1/4" = 1'-0"

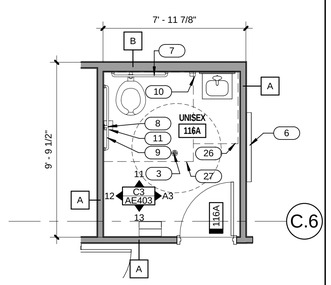

UNISEX ROOM 116A A4 AE403
1/4" = 1'-0"

GENERAL NOTES

- GENERAL CONTRACTOR SHALL FIELD VERIFY ALL CONDITIONS AND SHALL REPORT TO THE ARCHITECT ANY UNKNOWN CONDITIONS, ERRORS OR CONFLICTS IN THE DRAWINGS BEFORE BEGINNING WORK.
- DO NOT SCALE DRAWINGS.
- ITEMS SHOWN BY HIDDEN LINE ARE SPECIFIED BY OTHER SECTIONS.

ALL WALLS TO BE TYPE "A" U.N.O. ON PLAN — A

FIRE EXTINGUISHER — FE

KEYED NOTES

1 FAUCET. SEE PLUMBING DRAWINGS.
2 MOP SINK. SEE PLUMBING DRAWINGS.
3 FLOOR DRAIN. SLOPE FLOOR TO DRAIN AS SHOWN. SEE PLUMBING DRAWINGS.
4 MOP RACK. SEE ACCESSORY SCHEDULE.
5 FRP. SEE FINISH PLANS.
6 WHITEBOARD. SEE ACCESSORY SCHEDULE.
7 36" GRAB BAR. SEE ACCESSORY SCHEDULE.
8 18" VERTICAL GRAB BAR. SEE ACCESSORY SCHEDULE.
9 42" GRAB BAR. SEE ACCESSORY SCHEDULE.
10 SOAP DISPENSER. SEE ACCESSORY SCHEDULE.
11 TOILET PAPER DISPENSER. SEE ACCESSORY SCHEDULE.
12 MIRROR. SEE ACCESSORY SCHEDULE.
13 LIGHT FIXTURE. SEE ELECTRICAL DRAWINGS.
14 SANITARY NAPKIN DISPOSAL. SEE ACCESSORY SCHEDULE.
15 TOILET PARTITION. SEE SPECS.
16 URINAL PARTITION. SEE SPECS.
17 PAPER TOWEL DISPENSER. SEE ACCESSORY SCHEDULE.
18 HAND SANITIZER DISPENSER. SEE ACCESSORY SCHEDULE.
19 COUNTERTOP WITH INTEGRAL 4" HIGH BACKSPLASH. SEE CASEWORK DETAILS.
20 SANITARY NAPKIN VENDOR. SEE ACCESSORY SCHEDULE.
21 UPPER CABINET. SEE INTERIOR ELEVATIONS.
22 BASE. SEE FINISH PLANS.
23 6" TILE BASE. ALIGN JOINTS WITH FLOOR TILE JOINTS AS REQUIRED. SEE FINISH LEGEND
24 COUNTERTOP. SEE INTERIOR ELEVATIONS.
25 WASHER & DRYER. SEE ACCESSORY SCHEDULE.
26 30" CLEAR AREA.
27 56"X60" CLEAR AREA.

CRSA
649 E. South Temple
Salt Lake City, UT 84102
801.355.5915

MWL
11798 N. Lakeridge Pkwy.
Ashland, VA 23005
804-228-7473

State of Utah
Department of Administrative Services
Division of Facilities Construction & Management
4110 State Office Building
Salt Lake City, Utah 84114
Phone: (801) 538 - 3018
Fax: (801) 538 - 3267

DIVISION OF FACILITIES CONSTRUCTION AND MANAGEMENT
REVIEWED FOR CODE COMPLIANCE
SIGNATURE: Ernie Calle
DATE: 08-05-2014

STATE OF UTAH #134096 MEHRDAD SAMIE LICENSED ARCHITECT
04-28-2014
ARCHITECT-ENGINEER STAMP

Unified State Laboratory Module 2
4451 South 2700 West,
Taylorsville, UT 84118

DFCM #: 13020300
Project #: B13-024

DATE:	ISSUE TYPE:
APRIL 21, 2014	BID SET

CHECKED BY: J. NIELSEN
DRAWN BY: F. PITORE

ENLARGED FLOOR PLANS & INTERIOR ELEVATIONS

AE403
VOLUME 1

C:\Users\fernando\Documents_A_13024_Moab_2013_fernando.rvt
7/14/2014 12:34:58 PM

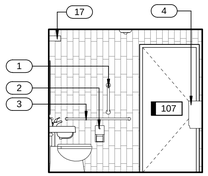

VIEW 1

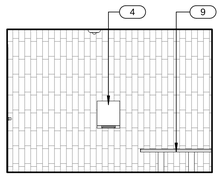

VIEW 2

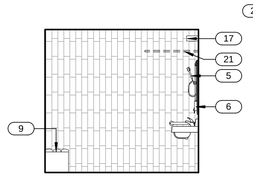

VIEW 3

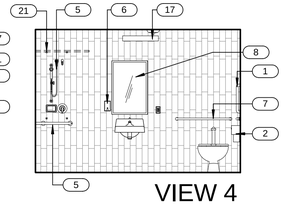

VIEW 4

UNISEX ROOMS (4 / AE404)
1/4" = 1'-0"

D3

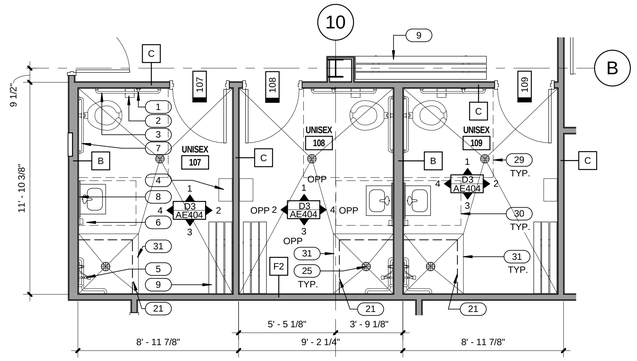

UNISEX ROOMS (D4 / AE404)
1/4" = 1'-0"

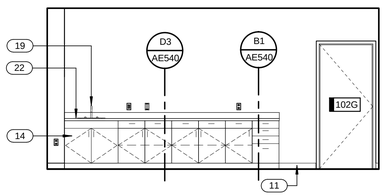

HALL 102J (C2 / AE404)
1/4" = 1'-0"

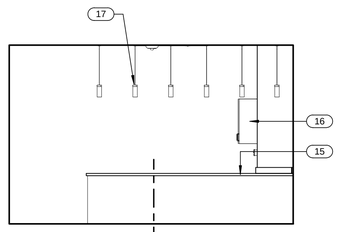

VIEW 5

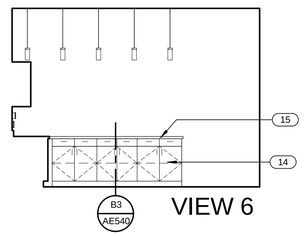

VIEW 6

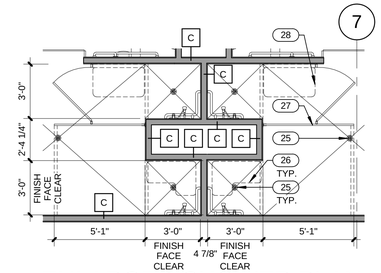

ENLARGED SHOWER PLAN (C5 / AE404)
1/4" = 1'-0"

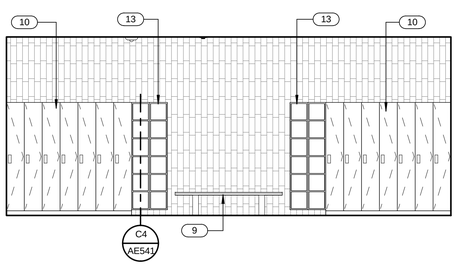

LOCKERS 110 (B2 / AE404)
1/4" = 1'-0"

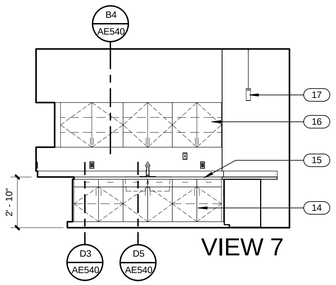

VIEW 7

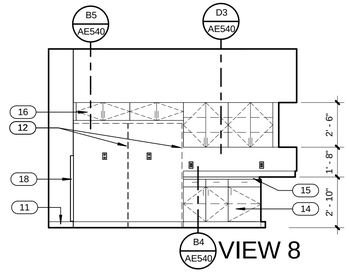

VIEW 8

BREAKROOM 104 (B3 / AE404)
1/4" = 1'-0"

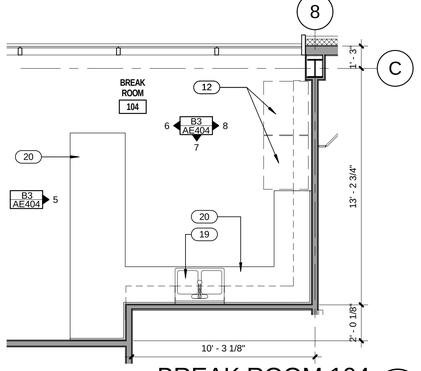

BREAK ROOM 104 (B4 / AE404)
1/4" = 1'-0"

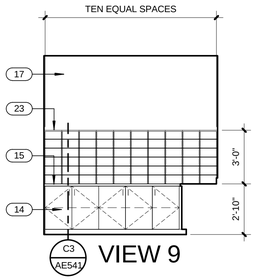

VIEW 9

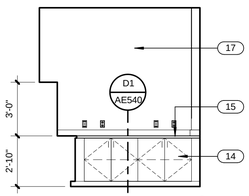

VIEW 10

MAIL 103 (A2 / AE404)
1/4" = 1'-0"

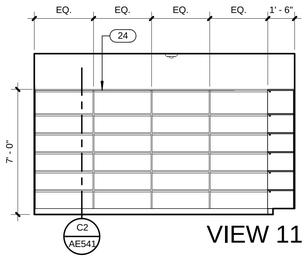

VIEW 11

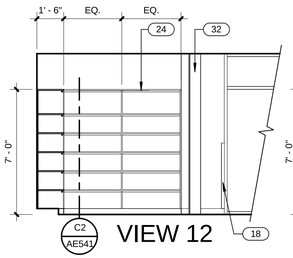

VIEW 12

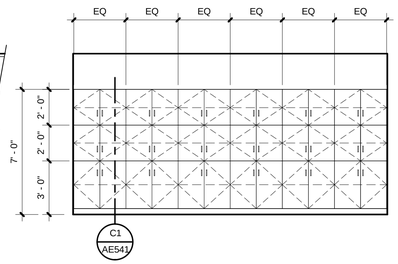

LIBRARY 131A (A3 / AE404)
1/4" = 1'-0"

FILES 102G (A4 / AE404)
1/4" = 1'-0"

GENERAL NOTES

- GENERAL CONTRACTOR SHALL FIELD VERIFY ALL CONDITIONS AND SHALL REPORT TO THE ARCHITECT ANY UNKNOWN CONDITIONS, ERRORS OR CONFLICTS IN THE DRAWINGS BEFORE BEGINNING WORK.
- DO NOT SCALE DRAWINGS.
- ITEMS SHOWN BY HIDDEN LINE ARE SPECIFIED BY OTHER SECTIONS.

ALL WALLS TO BE TYPE "A" U.N.O. ON PLAN — A

FIRE EXTINGUISHER — FE

KEYED NOTES

1. 18" VERTICAL GRAB BAR. SEE ACCESSORY SCHEDULE.
2. TOILET PAPER DISPENSER. SEE ACCESSORY SCHEDULE.
3. 42" GRAB BAR. SEE ACCESSORY SCHEDULE.
4. PAPER TOWEL DISPENSER. SEE ACCESSORY SCHEDULE.
5. SHOWER FIXTURE. SEE SHOWER MOUNTING HEIGHTS ON SHEET AE004.
6. SOAP DISPENSER. SEE ACCESSORY SCHEDULE.
7. 36" GRAB BAR. SEE ACCESSORY SCHEDULE.
8. MIRROR. SEE ACCESSORY SCHEDULE.
9. BENCH. SEE ACCESSORY SCHEDULE.
10. LOCKERS. SEE ACCESSORY SCHEDULE
11. BASE. SEE FINISH PLANS.
12. REFRIGERATOR. SEE EQUIPMENT SCHEDULE
13. CUBBIES. SEE INTERIOR ELEVATIONS.
14. BASE CABINET. SEE CASEWORK DETAILS.
15. COUNTERTOP. SEE INTERIOR ELEVATIONS.
16. UPPER CABINET. SEE INTERIOR ELEVATIONS.
17. LIGHT FIXTURE. SEE ELECTRICAL DRAWINGS.
18. STAINLESS STEEL CORNER GUARD. SEE SPECS.
19. SINK. SEE PLUMBING DRAWINGS.
20. CASEWORK. SEE INTERIOR ELEVATIONS.
21. SHOWER CURTAIN ROD. SEE ACCESSORY SCHEDULE.
22. COUNTERTOP WITH INTEGRAL 4" HIGH BACKSPLASH. SEE CASEWORK DETAILS.
23. MAIL SLOTS. SEE INTERIOR ELEVATIONS.
24. BOOKSHELF CABINET. SEE REFERENCED DETAILS.
25. FLOOR DRAIN. SLOPE FLOOR TO DRAIN AS SHOWN. SEE PLUMBING DRAWINGS.
26. ADA SHOWER BENCH. SEE SHOWER MOUNTING HEIGHTS ON SHEET AE004.
27. SHOWER PARTITION. SEE SPEC AND FINISH SCHEDULE.
28. FOLDING SEAT. SEE ACCESSORY SCHEDULE.
29. 56"X60" CLEAR AREA.
30. 30" CLEAR AREA.
31. 36"X36" FINISH FACE CLEAR.
32. PARTITION WALL. SEE SPECS.

CRSA
649 E. South Temple
Salt Lake City, UT 84102
801.355.5915

MWL
11798 N. Lakeridge Pkwy.
Ashland, VA 23005
804-228-7473

State of Utah
Department of Administrative Services
Division of Facilities Construction & Management
4110 State Office Building
Salt Lake City, Utah 84114
Phone: (801) 538 - 3018
Fax: (801) 538 - 3267

DIVISION OF FACILITIES CONSTRUCTION AND MANAGEMENT
REVIEWED FOR CODE COMPLIANCE
SIGNATURE: Ernie Calle
DATE: 08-05-2014

STATE OF UTAH #134096 MEHRDAD SAMIE LICENSED ARCHITECT
04-28-2014
ARCHITECT-ENGINEER STAMP

Unified State Laboratory Module 2

4451 South 2700 West, Taylorsville, UT 84118

DFCM #: 13020300
Project #: B13-024

DATE:	ISSUE TYPE:
APRIL 21, 2014	BID SET
CHECKED BY	J. NIELSEN
DRAWN BY	F. PITORE

ENLARGED FLOOR PLANS & INTERIOR ELEVATIONS

AE404

VOLUME 1

C:\Users\fernando\Documents_A_13024_Modil_2013_fernando.rvt
7/14/2014 12:35:31 PM

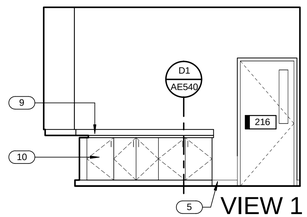

VIEW 1

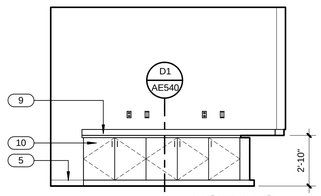

VIEW 2

CODIS CASEWORK 216 (D1 / AE405)
1/4" = 1'-0"

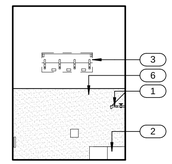

VIEW 3

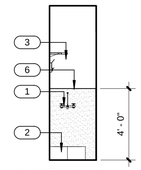

VIEW 4

JAN 210 NORTH (D2 / AE405)
1/4" = 1'-0"

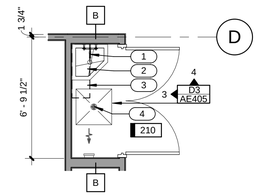

JAN 210 (D3 / AE405)
1/4" = 1'-0"

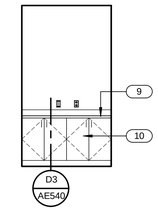

CHEM OFFICE 304 (D4 / AE405)
1/4" = 1'-0"

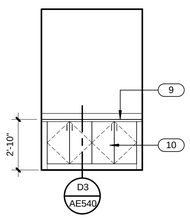

BACT OFFICE 309 (C1 / AE405)
1/4" = 1'-0"

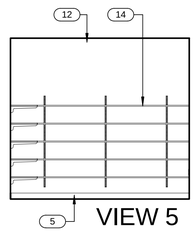

VIEW 5

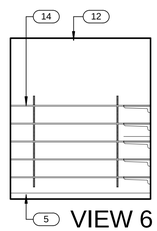

VIEW 6

STORAGE 309B (C3 / AE405)
1/4" = 1'-0"

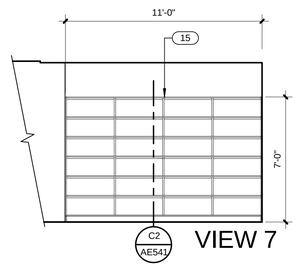

VIEW 7

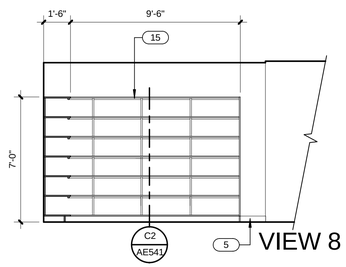

VIEW 8

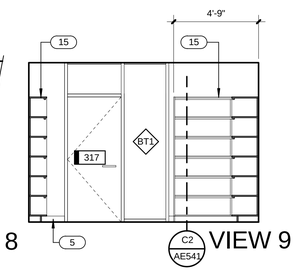

VIEW 9

LIBRARY 305 (C4 / AE405)
1/4" = 1'-0"

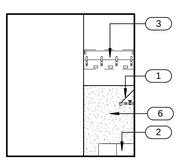

VIEW 10

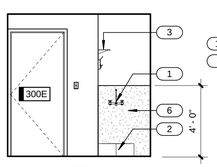

VIEW 11

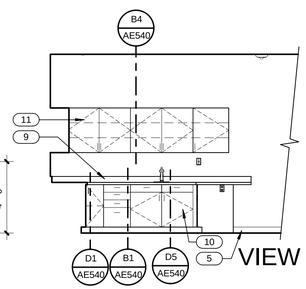

VIEW 12

JANITOR 300E (B1 / AE405)
1/4" = 1'-0"

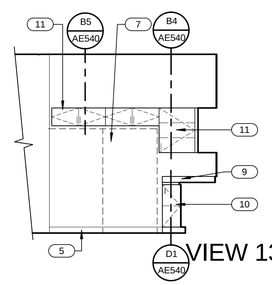

VIEW 13

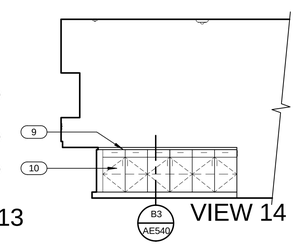

VIEW 14

BREAK ROOM 316 SOUTH (B3 / AE405)
1/4" = 1'-0"

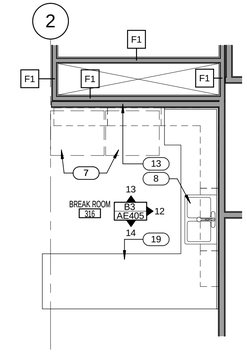

BREAK ROOM 316 (B4 / AE405)
1/4" = 1'-0"

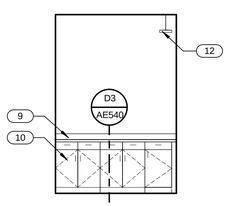

ID OFFICE 202 (A1 / AE405)
1/4" = 1'-0"

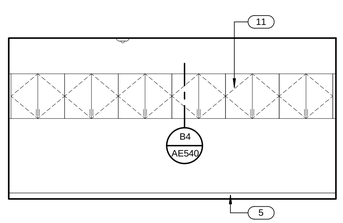

RECORDS 310A (A2 / AE405)
1/4" = 1'-0"

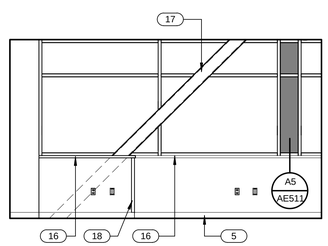

SILL ELEVATION (A3 / AE405)
1/4" = 1'-0"

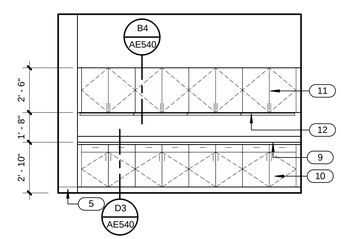

CONFERENCE CASEWORK 306 (A4 / AE405)
1/4" = 1'-0"

GENERAL NOTES

- GENERAL CONTRACTOR SHALL FIELD VERIFY ALL CONDITIONS AND SHALL REPORT TO THE ARCHITECT ANY UNKNOWN CONDITIONS, ERRORS OR CONFLICTS IN THE DRAWINGS BEFORE BEGINNING WORK.
- DO NOT SCALE DRAWINGS.
- ITEMS SHOWN BY HIDDEN LINE ARE SPECIFIED BY OTHER SECTIONS.

ALL WALLS TO BE TYPE "A" U.N.O. ON PLAN — A

FIRE EXTINGUISHER — FE

KEYED NOTES

1 FAUCET. SEE PLUMBING DRAWINGS.
2 MOP SINK. SEE PLUMBING DRAWINGS.
3 MOP RACK. SEE ACCESSORY SCHEDULE.
4 FLOOR DRAIN. SLOPE FLOOR TO DRAIN AS SHOWN. SEE PLUMBING DRAWINGS.
5 BASE. SEE FINISH PLANS.
6 FRP. SEE FINISH PLANS.
7 REFRIGERATOR. SEE EQUIPMENT SCHEDULE
8 SINK. SEE PLUMBING DRAWINGS.
9 COUNTERTOP WITH INTEGRAL 4" HIGH BACKSPLASH. SEE CASEWORK DETAILS.
10 BASE CABINET. SEE CASEWORK DETAILS.
11 UPPER CABINET. SEE INTERIOR ELEVATIONS.
12 LIGHT FIXTURE. SEE ELECTRICAL DRAWINGS.
13 FURR WALL WITH WALL TYPE H. SEE FINISH PLANS FOR FINISH.
14 ADJUSTABLE SHELVING. SEE A3/AE540.
15 BOOKSHELF. SEE INTERIOR ELEVATIONS.
16 WINDOW SILL. SEE FINISH LEGEND.
17 STEEL JOIST. PAINT WHERE EXPOSED. SEE STRUCTURAL.
18 STAINLESS STEEL CORNER GUARD. SEE SPECS.
19 CASEWORK. SEE INTERIOR ELEVATIONS.

CRSA
649 E. South Temple
Salt Lake City, UT 84102
801.355.5915

MWL
11798 N. Lakeridge Pkwy.
Ashland, VA 23005
804-228-7473

State of Utah
Department of Administrative Services
Division of Facilities Construction & Management
4110 State Office Building
Salt Lake City, Utah 84114
Phone: (801) 538 - 3018
Fax: (801) 538 - 3267

DIVISION OF FACILITIES CONSTRUCTION AND MANAGEMENT
REVIEWED FOR CODE COMPLIANCE
SIGNATURE: Ernie Calle
DATE: 08-05-2014

STATE OF UTAH #134096 MEHRDAD SAMIE LICENSED ARCHITECT
04.28.2014
ARCHITECT-ENGINEER STAMP

Unified State Laboratory Module 2

4451 South 2700 West, Taylorsville, UT 84118

DFCM #: 13020300
Project #: B13-024

DATE:	ISSUE TYPE:
APRIL 21, 2014	BID SET
CHECKED BY	J. NIELSEN
DRAWN BY	F. PITORE

ENLARGED FLOOR PLANS & INTERIOR ELEVATIONS

AE405

VOLUME 1

C:\Users\fernando\Documents_A_13024_Modli_2013_fernando.rvt
7/14/2014 12:38:10 PM

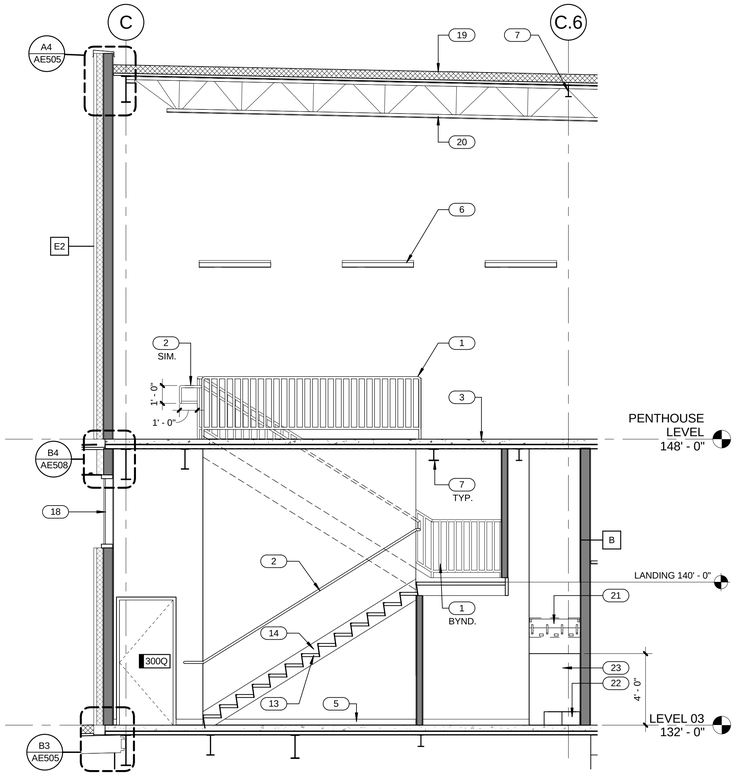

PENTHOUSE STAIR

B3 / AE430

1/4" = 1'-0"

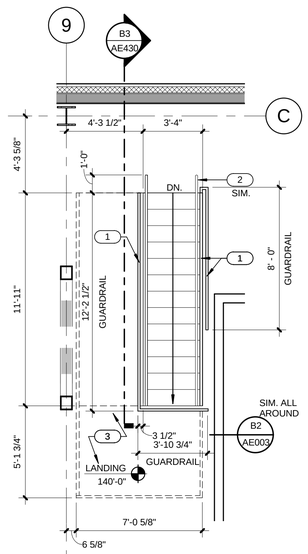

STAIR-4 PENTHOUSE LEVEL

D3 / AE430

1/4" = 1'-0"

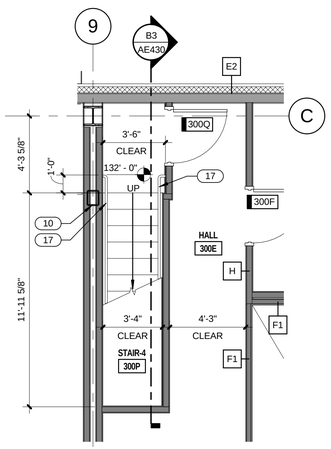

STAIR-4 LEVEL 3

D4 / AE430

1/4" = 1'-0"

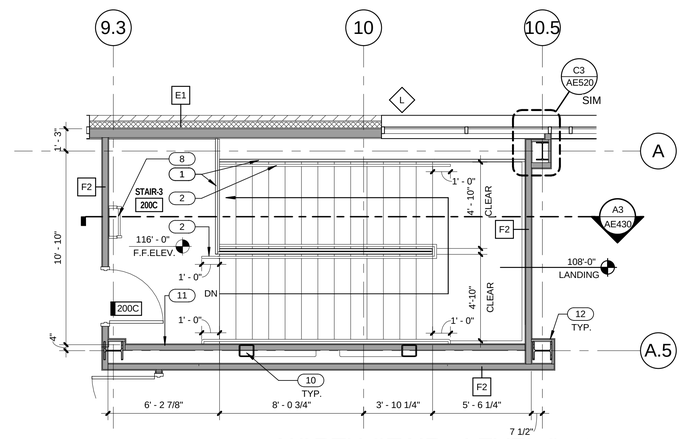

NORTH STAIR - LEVEL 2

B4 / AE430

1/4" = 1'-0"

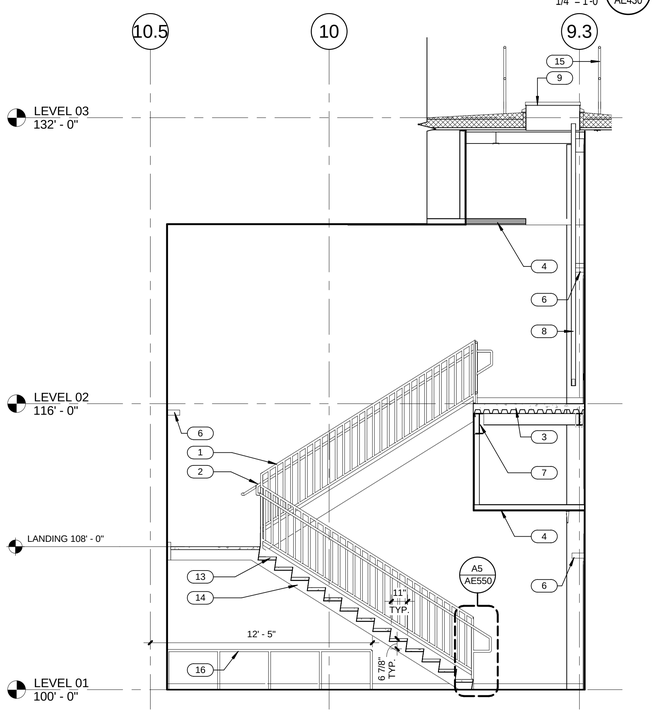

NORTH STAIR SECTION

A3 / AE430

1/4" = 1'-0"

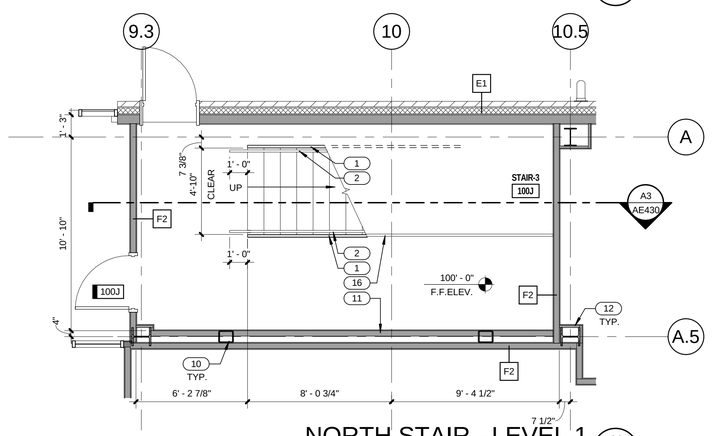

NORTH STAIR - LEVEL 1

A4 / AE430

1/4" = 1'-0"

GENERAL NOTES

- GENERAL CONTRACTOR SHALL FIELD VERIFY ALL CONDITIONS AND SHALL REPORT TO THE ARCHITECT ANY UNKNOWN CONDITIONS, ERRORS OR CONFLICTS IN THE DRAWINGS BEFORE BEGINNING WORK.
- DO NOT SCALE DRAWINGS.
- ITEMS SHOWN BY HIDDEN LINE ARE SPECIFIED BY OTHER SECTIONS.

ALL WALLS TO BE TYPE "A" U.N.O. ON PLAN — A

FIRE EXTINGUISHER — FE

KEYED NOTES

1 1-1/2" DIA. PIPE GUARDRAIL. PAINT.
2 HANDRAIL. SEE DETAIL A5/AE550.
3 CONCRETE SLAB ON DECK. SEE STRUCTURAL.
4 GYP. BD. CEILING. SEE CEILING PLAN.
5 BASE. SEE FINISH PLANS.
6 LIGHT FIXTURE. SEE ELECTRICAL DRAWINGS.
7 STEEL BEAM. PAINT WHERE EXPOSED. SEE STRUCTURAL.
8 ROOF ACCESS LADDER. SEE DETAIL C3/AE550
9 ROOF HATCH. SEE DETAIL D2/AE501
10 BRACE FRAME. PAINT WHERE EXPOSED. SEE STRUCTURAL.
11 FURR WALL WITH WALL TYPE H. SEE FINISH PLANS FOR FINISH.
12 COLUMN WRAP. SIMILAR TO DETAIL A5/AE520
13 CONCRETE FILLED METAL PAN STAIR TREADS PAINT.
14 STAIR STRINGER. PAINT. SEE STRUCTURAL.
15 SAFETY GUARDRAIL. SEE DETAIL C4/AE501.
16 CANE DETECTION RAILING. SEE B5/AE550.
17 HANDRAIL, RETURN TO WALL.
18 CURTAIN WALL SYSTEM. SEE WINDOW TYPES.
19 ROOF ASSEMBLY. SEE ROOF TYPES.
20 STEEL JOIST. PAINT WHERE EXPOSED. SEE STRUCTURAL.
21 MOP RACK. SEE ACCESSORY SCHEDULE.
22 MOP SINK. SEE PLUMBING DRAWINGS.
23 FRP. SEE FINISH PLANS.

CRSA
649 E. South Temple
Salt Lake City, UT 84102
801.355.5915

MWL
11798 N. Lakeridge Pkwy.
Ashland, VA 23005
804-228-7473

State of Utah
Department of Administrative Services
DFCM
Division of Facilities Construction & Management
4110 State Office Building
Salt Lake City, Utah 84114
Phone: (801) 538 - 3018
Fax: (801) 538 - 3267

DIVISION OF FACILITIES CONSTRUCTION AND MANAGEMENT
REVIEWED FOR CODE COMPLIANCE
SIGNATURE: Ernie Calle
DATE: 08-05-2014

STATE OF UTAH
#134098
MEHRDAD SAMIE
LICENSED ARCHITECT
04-28-2014
ARCHITECT-ENGINEER STAMP

Unified State Laboratory Module 2

4451 South 2700 West,
Taylorsville, UT 84118

DFCM #: 13020300
Project #: B13-024

DATE:	ISSUE TYPE:
APRIL 21, 2014	BID SET
CHECKED BY	J. NIELSEN
DRAWN BY	F. PITORE

STAIR ENLARGED PLANS & SECTIONS

AE430

VOLUME 1

C:\Users\fernando\Documents_A_13024_Modli_2013_fernando.rvt
7/14/2014 12:36:26 PM

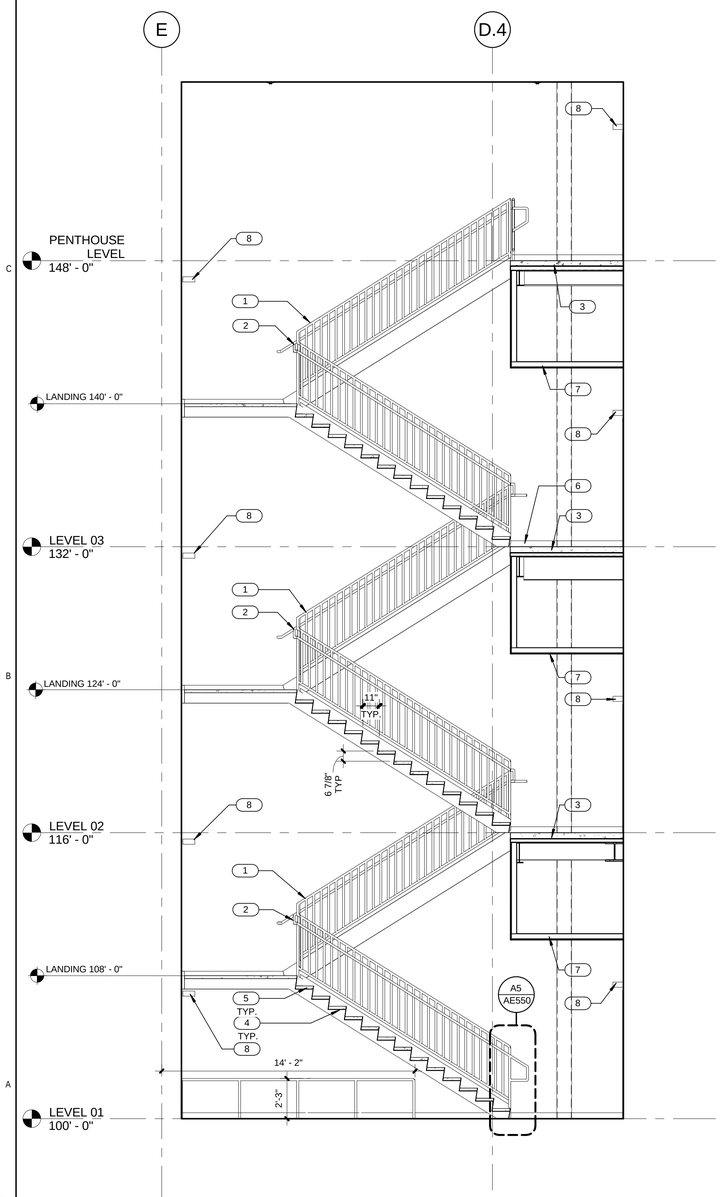

EAST STAIR SECTION (A2 / AE431)
1/4" = 1'-0"

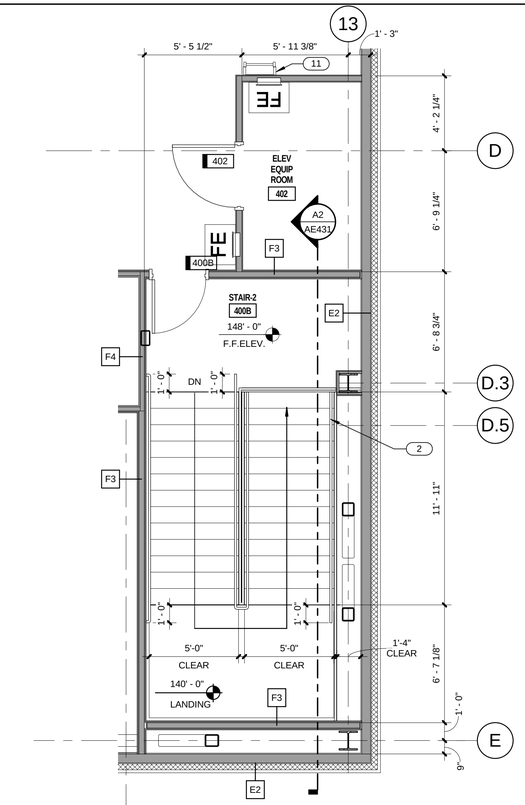

EAST STAIR - PENTHOUSE LEVEL (B3 / AE431)
1/4" = 1'-0"

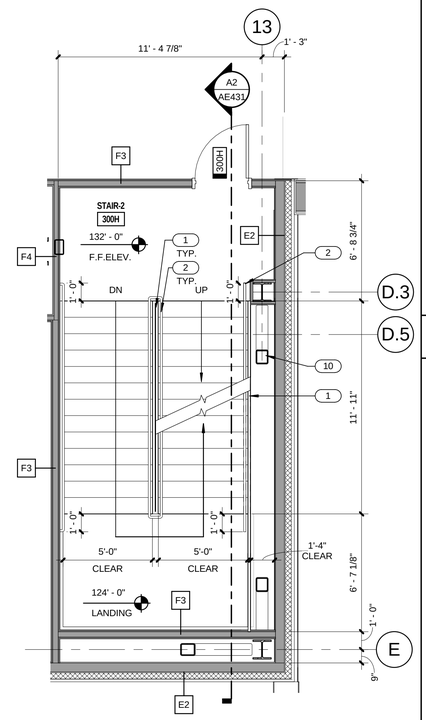

EAST STAIR - LEVEL 3 (B4 / AE431)
1/4" = 1'-0"

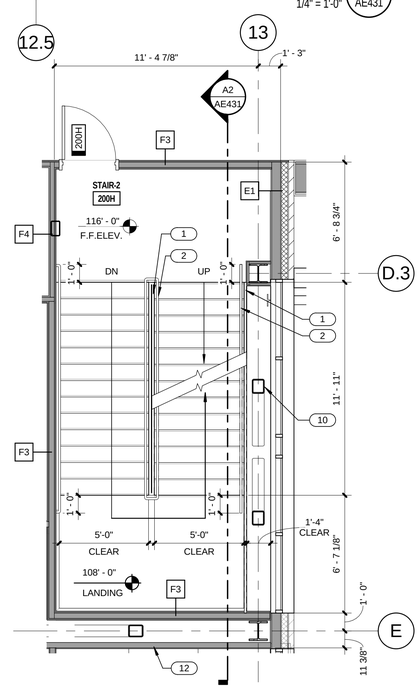

EAST STAIR - LEVEL 2 (A3 / AE431)
1/4" = 1'-0"

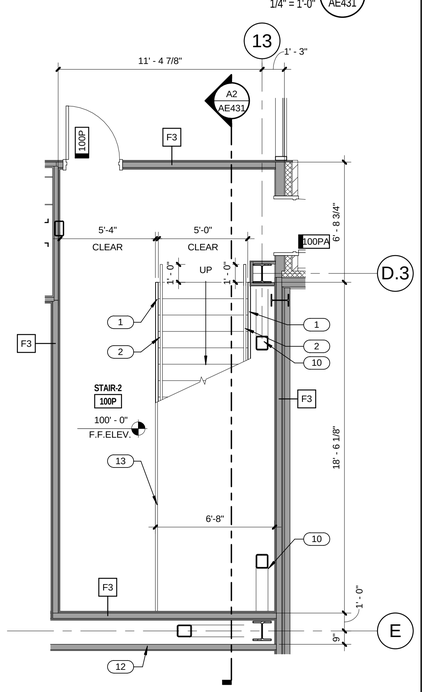

EAST STAIR - LEVEL 1 (A4 / AE431)
1/4" = 1'-0"

GENERAL NOTES

- GENERAL CONTRACTOR SHALL FIELD VERIFY ALL CONDITIONS AND SHALL REPORT TO THE ARCHITECT ANY UNKNOWN CONDITIONS, ERRORS OR CONFLICTS IN THE DRAWINGS BEFORE BEGINNING WORK.
- DO NOT SCALE DRAWINGS.
- ITEMS SHOWN BY HIDDEN LINE ARE SPECIFIED BY OTHER SECTIONS.

ALL WALLS TO BE TYPE "A" U.N.O. ON PLAN — A

FIRE EXTINGUISHER — FE

KEYED NOTES

1 1-1/2" DIA. PIPE GUARDRAIL. PAINT.
2 HANDRAIL. SEE DETAIL A5/AE550.
3 CONCRETE SLAB ON DECK. SEE STRUCTURAL.
4 STAIR STRINGER. PAINT. SEE STRUCTURAL.
5 CONCRETE FILLED METAL PAN STAIR TREADS PAINT.
6 BASE. SEE FINISH PLANS.
7 GYP. BD. CEILING. SEE CEILING PLAN.
8 LIGHT FIXTURE. SEE ELECTRICAL DRAWINGS.
9 STEEL BEAM. PAINT WHERE EXPOSED. SEE STRUCTURAL.
10 BRACE FRAME. PAINT WHERE EXPOSED. SEE STRUCTURAL.
11 ROOF ACCESS LADDER. SEE DETAIL C3/AE550
12 FURR WALL WITH WALL TYPE H. SEE FINISH PLANS FOR FINISH.
13 CANE DETECTION RAILING. SEE B5/AE550.

CRSA
649 E. South Temple
Salt Lake City, UT 84102
801.355.5915

MWL
11798 N. Lakeridge Pkwy.
Ashland, VA 23005
804-228-7473

State of Utah
Department of Administrative Services
Division of Facilities Construction & Management
4110 State Office Building
Salt Lake City, Utah 84114
Phone: (801) 538 - 3018
Fax: (801) 538 - 3267

DIVISION OF FACILITIES CONSTRUCTION AND MANAGEMENT
REVIEWED FOR CODE COMPLIANCE
SIGNATURE: Ernie Gelfe
DATE: 08-05-2014

STATE OF UTAH #134096 MEHRDAD SAMIE LICENSED ARCHITECT
04-28-2014
ARCHITECT-ENGINEER STAMP

Unified State Laboratory Module 2
4451 South 2700 West,
Taylorsville, UT 84118

DFCM #: 13020300
Project #: B13-024

DATE:	ISSUE TYPE:
APRIL 21, 2014	BID SET
CHECKED BY	J. NIELSEN
DRAWN BY	F. PITORE

STAIR ENLARGED PLANS & SECTIONS

AE431
VOLUME 1

C:\Users\fernando\Documents_A_13024_Modl_2013_fernando.rvt
7/14/2014 12:36:42 PM

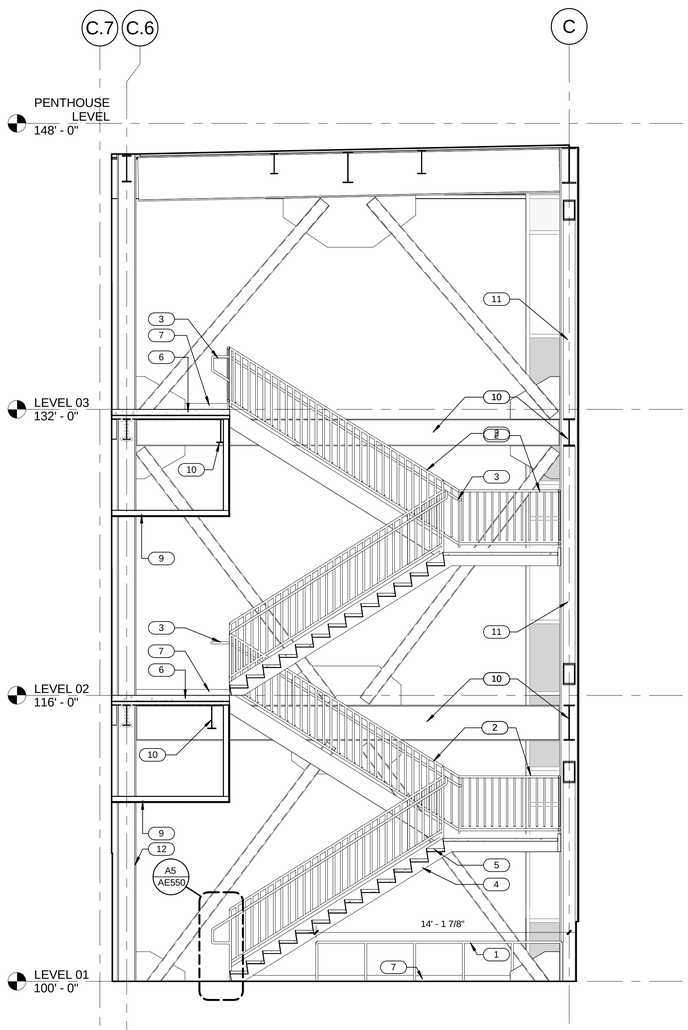

WEST STAIR SECTION A2 / AE432
1/4" = 1'-0"

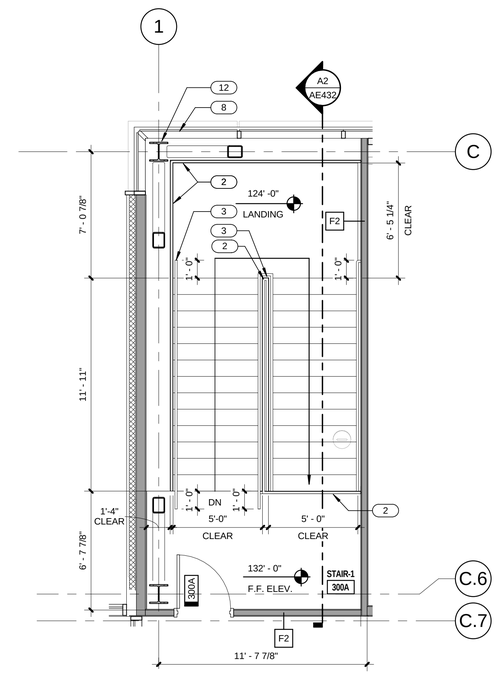

WEST STAIR - LEVEL 3 B4 / AE432
1/4" = 1'-0"

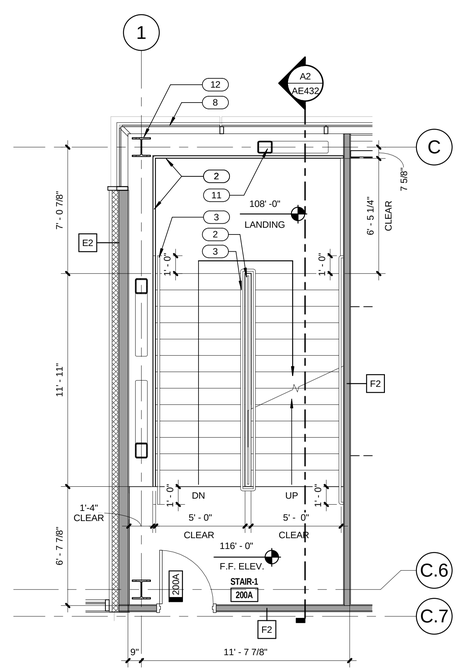

WEST STAIR - LEVEL 2 A3 / AE432
1/4" = 1'-0"

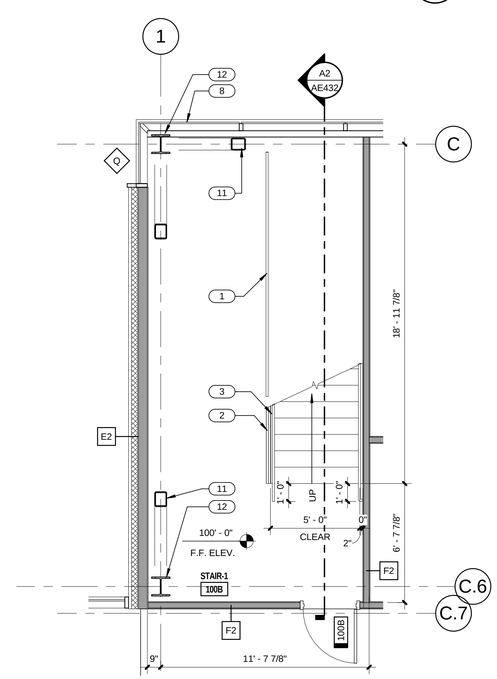

WEST STAIR - LEVEL 1 A4 / AE432
1/4" = 1'-0"

GENERAL NOTES

- GENERAL CONTRACTOR SHALL FIELD VERIFY ALL CONDITIONS AND SHALL REPORT TO THE ARCHITECT ANY UNKNOWN CONDITIONS, ERRORS OR CONFLICTS IN THE DRAWINGS BEFORE BEGINNING WORK.
- DO NOT SCALE DRAWINGS.
- ITEMS SHOWN BY HIDDEN LINE ARE SPECIFIED BY OTHER SECTIONS.

ALL WALLS TO BE TYPE "A" U.N.O. ON PLAN — A

FIRE EXTINGUISHER — FE

KEYED NOTES

1 CANE DETECTION RAILING. SEE B5/AE550.
2 1-1/2" DIA. PIPE GUARDRAIL. PAINT.
3 HANDRAIL. SEE DETAIL A5/AE550.
4 STAIR STRINGER. PAINT. SEE STRUCTURAL.
5 CONCRETE FILLED METAL PAN STAIR TREADS PAINT.
6 CONCRETE SLAB ON DECK. SEE STRUCTURAL.
7 BASE. SEE FINISH PLANS.
8 CURTAIN WALL SYSTEM. SEE WINDOW TYPES.
9 GYP. BD. CEILING. SEE CEILING PLAN.
10 STEEL BEAM. PAINT WHERE EXPOSED. SEE STRUCTURAL.
11 BRACE FRAME. PAINT WHERE EXPOSED. SEE STRUCTURAL.
12 STEEL COLUMN. SEE STRUCTURAL. PAINT WHERE EXPOSED.

CRSA
649 E. South Temple
Salt Lake City, UT 84102
801.355.5915

MWL
11798 N. Lakeridge Pkwy.
Ashland, VA 23005
804-228-7473

State of Utah
Department of Administrative Services
Division of Facilities Construction & Management
4110 State Office Building
Salt Lake City, Utah 84114
Phone: (801) 538 - 3018
Fax: (801) 538 - 3267

DIVISION OF FACILITIES CONSTRUCTION AND MANAGEMENT
REVIEWED FOR CODE COMPLIANCE
SIGNATURE: Ernie Calle
DATE: 08-05-2014

STATE OF UTAH #134098 MEHRDAD SAMIE LICENSED ARCHITECT
04.28.2014
ARCHITECT-ENGINEER STAMP

Unified State Laboratory Module 2

4451 South 2700 West, Taylorsville, UT 84118

DFCM #: 13020300
Project #: B13-024

DATE:	ISSUE TYPE:
APRIL 21, 2014	BID SET
CHECKED BY	J. NIELSEN
DRAWN BY	F. PITORE

STAIR ENLARGED PLANS & SECTIONS

AE432

VOLUME 1

C:\Users\fernando\Documents_A_13024_Modl_2013_fernando.rvt
7/14/2014 12:36:54 PM

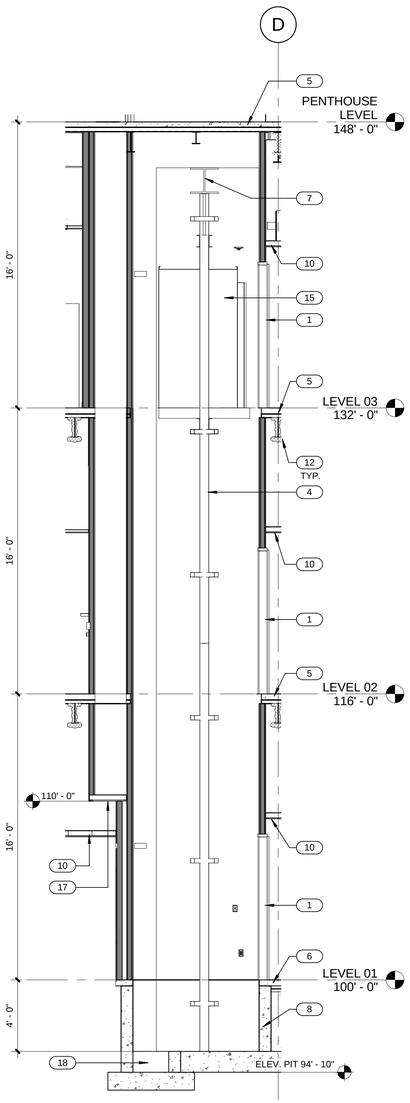

WEST ELEVATOR SECTION A1 / AE433
1/4" = 1'-0"

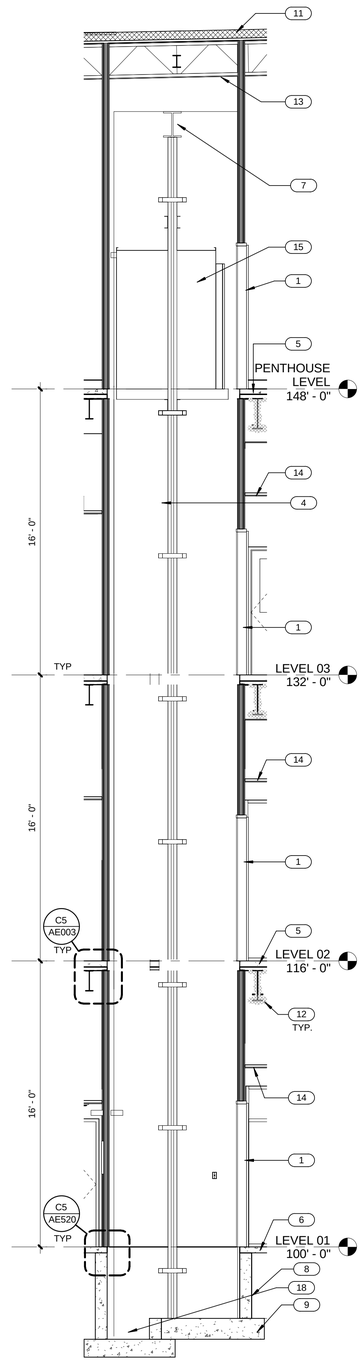

EAST ELEVATOR SECTION A2 / AE433
1/4" = 1'-0"

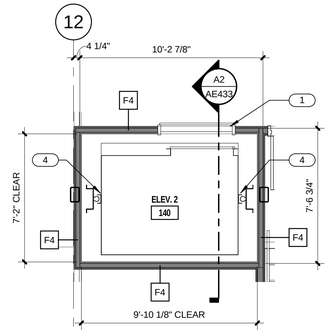

EAST ELEVATOR PENTHOUSE D3 / AE433
1/4" = 1'-0"

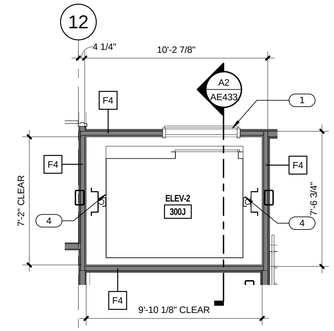

EAST ELEVATOR LEVEL 3 D4 / AE433
1/4" = 1'-0"

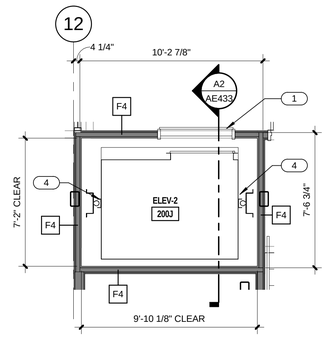

EAST ELEVATOR LEVEL 2 C3 / AE433
1/4" = 1'-0"

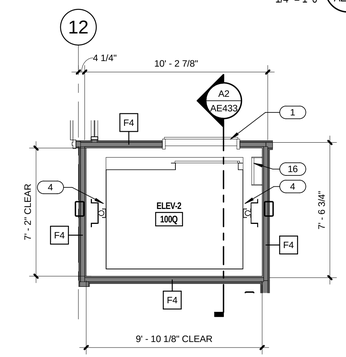

EAST ELEVATOR LEVEL 1 C4 / AE433
1/4" = 1'-0"

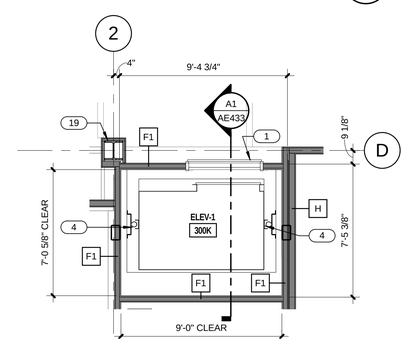

WEST ELEVATOR LEVEL 3 B4 / AE433
1/4" = 1'-0"

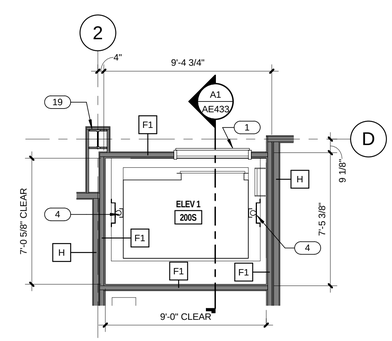

WEST ELEVATOR LEVEL 2 A3 / AE433
1/4" = 1'-0"

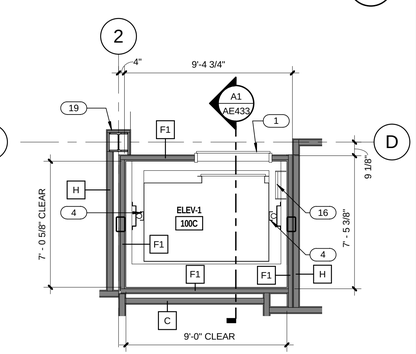

WEST ELEVATOR LEVEL 1 A4 / AE433
1/4" = 1'-0"

GENERAL NOTES

- GENERAL CONTRACTOR SHALL FIELD VERIFY ALL CONDITIONS AND SHALL REPORT TO THE ARCHITECT ANY UNKNOWN CONDITIONS, ERRORS OR CONFLICTS IN THE DRAWINGS BEFORE BEGINNING WORK.
- DO NOT SCALE DRAWINGS.
- ITEMS SHOWN BY HIDDEN LINE ARE SPECIFIED BY OTHER SECTIONS.

ALL WALLS TO BE TYPE "A" U.N.O. ON PLAN — A

FIRE EXTINGUISHER — FE

KEYED NOTES

1 ELEVATOR DOOR. SEE SPEC.
2 1-1/2" DIA. PIPE GUARDRAIL. PAINT.
3 HANDRAIL. SEE DETAIL A5/AE550.
4 ELEVATOR GUIDE RAILS PER MANUFACTURER.
5 CONCRETE SLAB ON DECK. SEE STRUCTURAL.
6 30" CLEAR AREA.
7 HOIST BEAM. SEE STRUCTURAL.
8 REINFORCED CONCRETE FOUNDATION WALL. SEE STRUCTURAL.
9 REINFORCED CONCRETE FOOTING. SEE STRUCTURAL.
10 GYP. BD. CEILING. SEE CEILING PLAN.
11 ROOF ASSEMBLY. SEE ROOF TYPES.
12 STEEL BEAM. SEE STRUCTURAL. FIREPROOF PER SPEC.
13 STEEL JOIST. PAINT WHERE EXPOSED. SEE STRUCTURAL.
14 LAY-IN CEILING . SEE CEILING PLANS.
15 ELEVATOR. SEE SPEC.
16 ACCESS LADDER. SEE ELEVATOR SECTION.
17 FIRE RATED BOTTOM OF SHAFT. SEE CS/AE530
18 24"x24"x24" SUMP PIT. SEE DETAIL A4/AE550. COORDINATE WITH MECHANICAL DRAWINGS.
19 FURR WITH 1-1/2" METAL FRAMING. PROVIDE DETAIL SIMILAR TO COLUMN WRAP TYPE B. COORDINATE WITH MECHANICAL.

CRSA
649 E. South Temple
Salt Lake City, UT 84102
801.355.5915

MWL
11798 N. Lakeridge Pkwy.
Ashland, VA 23005
804-228-7473

State of Utah
Department of Administrative Services
DFCM
Division of Facilities Construction & Management
4110 State Office Building
Salt Lake City, Utah 84114
Phone: (801) 538 - 3018
Fax: (801) 538 - 3267

DIVISION OF FACILITIES CONSTRUCTION AND MANAGEMENT
REVIEWED FOR CODE COMPLIANCE
SIGNATURE: Ernie Calle
DATE: 08-05-2014

STATE OF UTAH #134096 MEHRDAD SAMIE LICENSED ARCHITECT
04-28-2014
ARCHITECT-ENGINEER STAMP

Unified State Laboratory Module 2

4451 South 2700 West, Taylorsville, UT 84118

DFCM #: 13020300
Project #: B13-024

DATE:	ISSUE TYPE:
APRIL 21, 2014	BID SET
CHECKED BY	J. NIELSEN
DRAWN BY	F. PITORE

ELEVATOR ENLARGED PLANS & SECTIONS

AE433

VOLUME 1

C:\Users\fernando\Documents_A_13024_Modli_2013_fernando.rvt
7/14/2014 12:37:16 PM

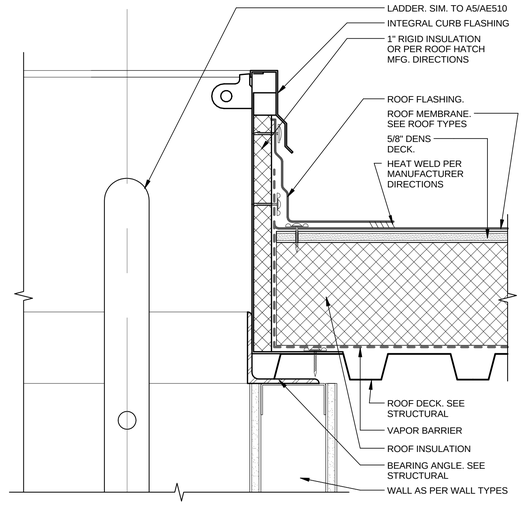

ROOF HATCH DETAIL (D2 / AE501)

3" = 1'-0"

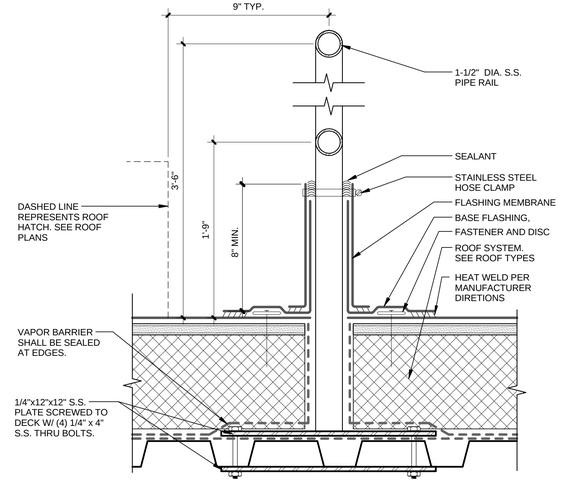

SAFETY GUARDRAIL DETAIL (C4 / AE501)

3" = 1'-0"

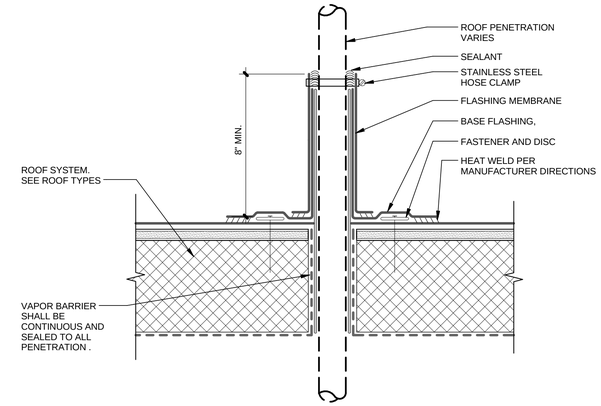

PENETRATION DETAIL (C5 / AE501)

3" = 1'-0"

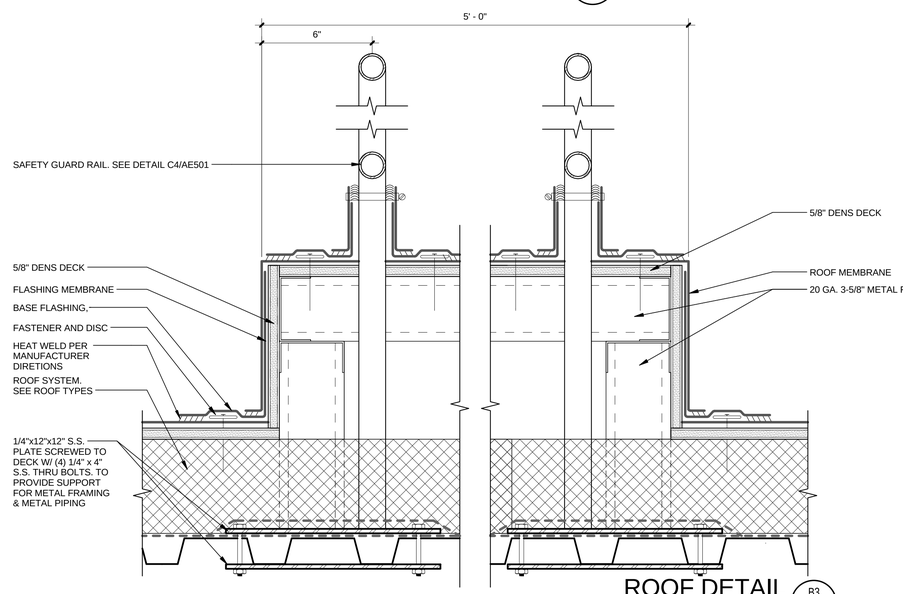

ROOF DETAIL (B3 / AE501)

3" = 1'-0"

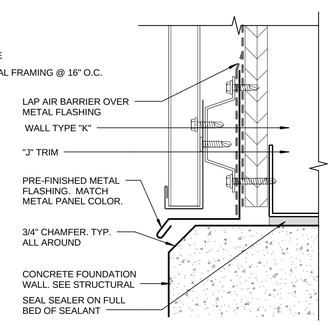

BASE DETAIL (B4 / AE501)

6" = 1'-0"

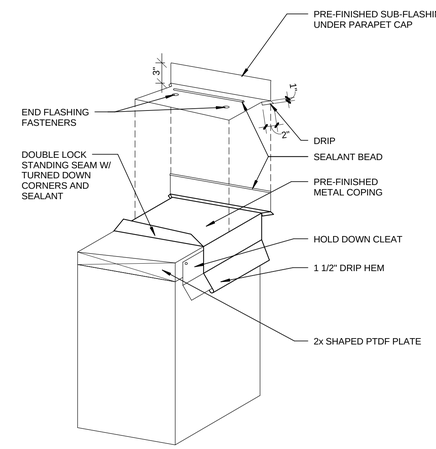

COPING (B5 / AE501)

N.T.S.

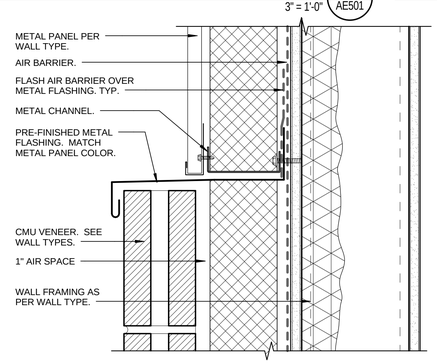

WALL DETAIL (A3 / AE501)

3" = 1'-0"

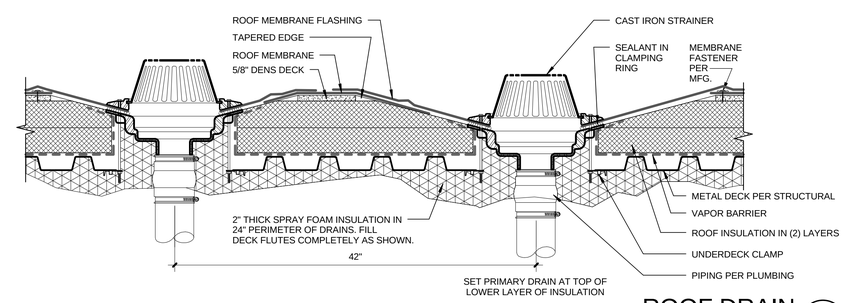

ROOF DRAIN (A5 / AE501)

1 1/2" = 1'-0"

CRSA
649 E. South Temple
Salt Lake City, UT 84102
801.355.5915

MWL
11798 N. Lakeridge Pkwy.
Ashland, VA 23005
804-228-7473

State of Utah
Department of Administrative Services
Division of Facilities Construction & Management
4110 State Office Building
Salt Lake City, Utah 84114
Phone: (801) 538 - 3018
Fax: (801) 538 - 3267

DIVISION OF FACILITIES CONSTRUCTION AND MANAGEMENT
REVIEWED FOR CODE COMPLIANCE
SIGNATURE: Ernie Calle
DATE: 08-05-2014

STATE OF UTAH #134098 MEHRDAD SAMIE LICENSED ARCHITECT
04.28.2014
ARCHITECT-ENGINEER STAMP

Unified State Laboratory Module 2

4451 South 2700 West, Taylorsville, UT 84118

DFCM #: 13020300
Project #: B13-024

DATE:	ISSUE TYPE:
APRIL 21, 2014	BID SET
CHECKED BY	J. NIELSEN
DRAWN BY	F. PITORE

DETAILS

AE501

VOLUME 1

C:\Users\fernando\Documents_A_13024_Modli_2013_fernando.rvt
7/14/2014 12:37:26 PM

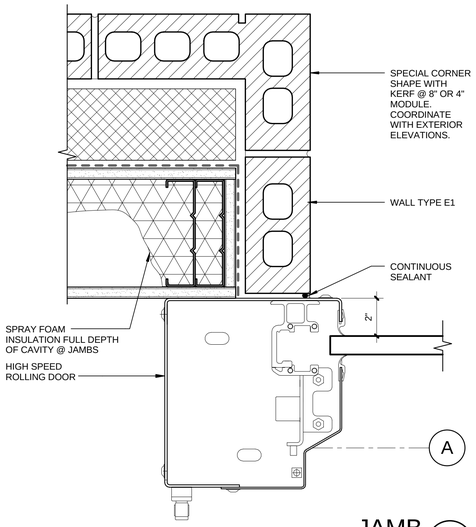

JAMB C1 AE502
3" = 1'-0"

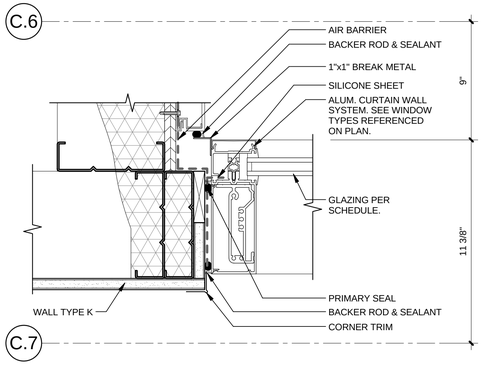

JAMB DETAIL C3 AE502
3" = 1'-0"

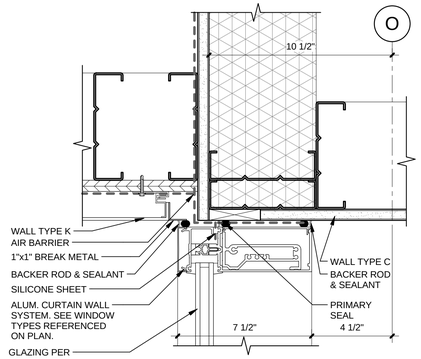

JAMB DETAIL C4 AE502
3" = 1'-0"

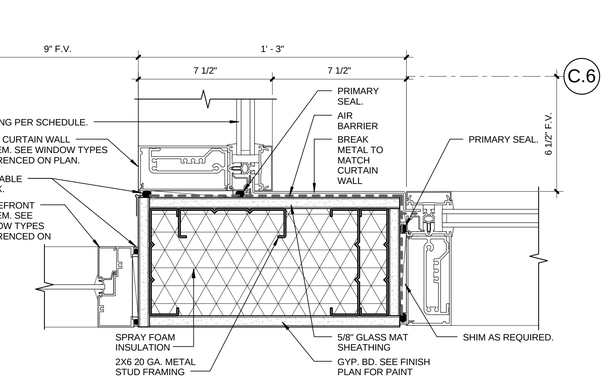

JAMB DETAIL D5 AE502
3" = 1'-0"

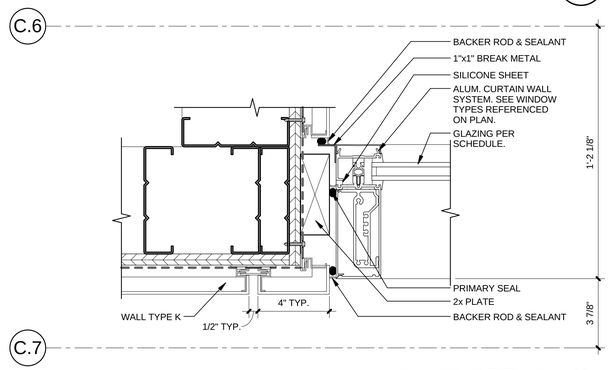

JAMB DETAIL C5 AE502
3" = 1'-0"

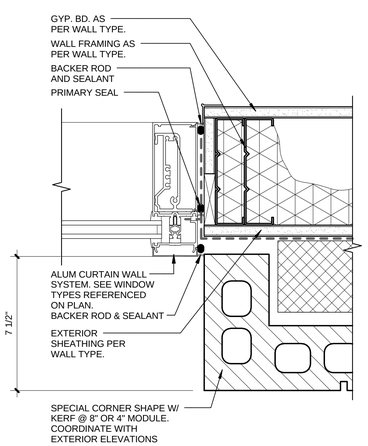

JAMB DETAIL A1 AE502
3" = 1'-0"

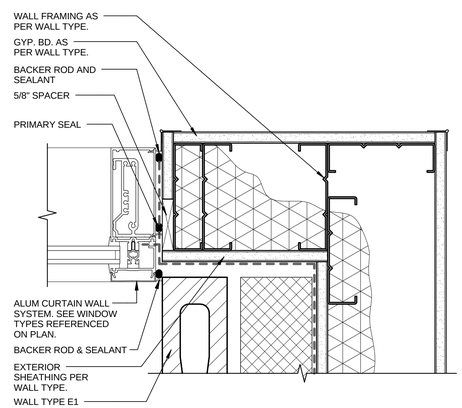

JAMB DETAIL A3 AE502
3" = 1'-0"

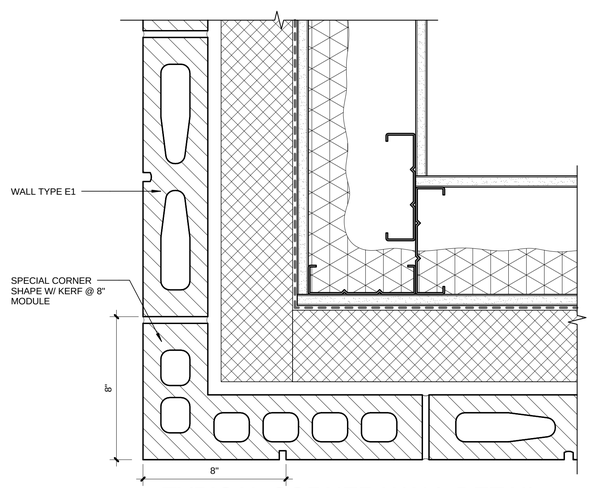

TYPICAL CORNER WALL DETAIL A4 AE502
3" = 1'-0"

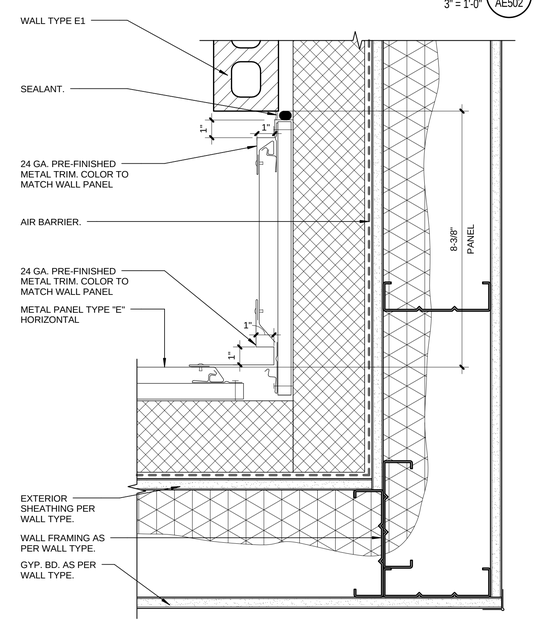

INSIDE CORNER DETAIL A5 AE502
3" = 1'-0"

CRSA
649 E. South Temple
Salt Lake City, UT 84102
801.355.5915

MWL
11798 N. Lakeridge Pkwy.
Ashland, VA 23005
804-228-7473

State of Utah
Department of Administrative Services
DFCM
Division of Facilities Construction & Management
4110 State Office Building
Salt Lake City, Utah 84114
Phone: (801) 538 - 3018
Fax: (801) 538 - 3267

DIVISION OF FACILITIES CONSTRUCTION AND MANAGEMENT
REVIEWED FOR CODE COMPLIANCE
SIGNATURE: Ernie Calle
DATE: 08-05-2014

STATE OF UTAH #134096 MEHRDAD SAMIE LICENSED ARCHITECT
04-28-2014
ARCHITECT-ENGINEER STAMP

Unified State Laboratory Module 2

4451 South 2700 West, Taylorsville, UT 84118

DFCM #: 13020300
Project #: B13-024

DATE:	ISSUE TYPE:
APRIL 21, 2014	BID SET
CHECKED BY	J. NIELSEN
DRAWN BY	F. PITORE

DETAILS

AE502
VOLUME 1

C:\Users\fernando\Documents_A_13024_Modil_2013_fernando.rvt
7/14/2014 12:37:34 PM

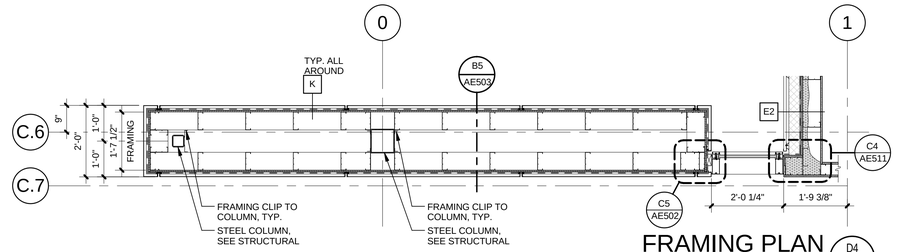

FRAMING PLAN D4 AE503
1/2" = 1'-0"

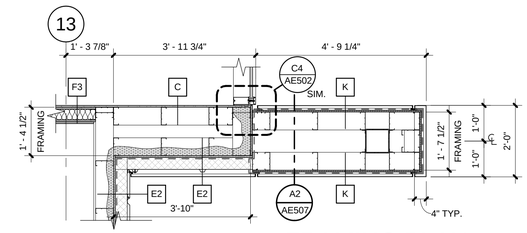

FRAMING PLAN D5 AE503
1/2" = 1'-0"

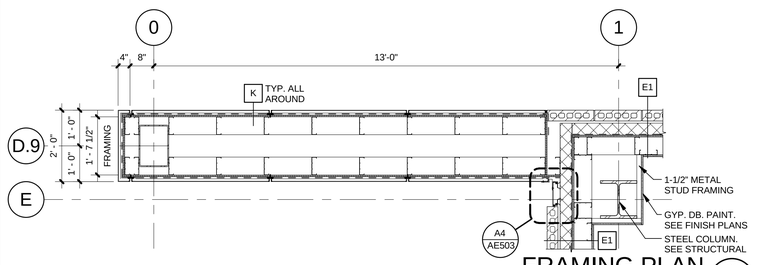

FRAMING PLAN C2 AE503
1/2" = 1'-0"

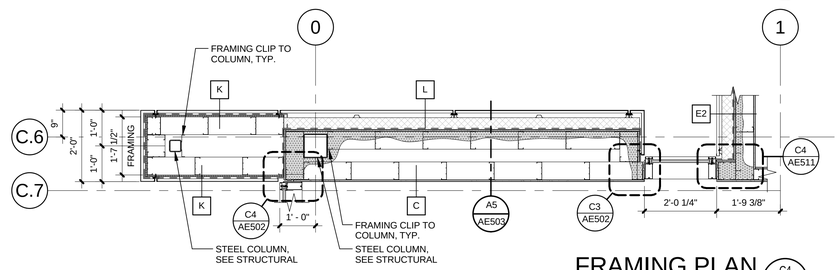

FRAMING PLAN C4 AE503
1/2" = 1'-0"

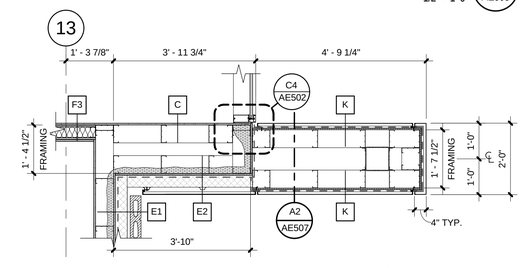

FRAMING PLAN C5 AE503
1/2" = 1'-0"

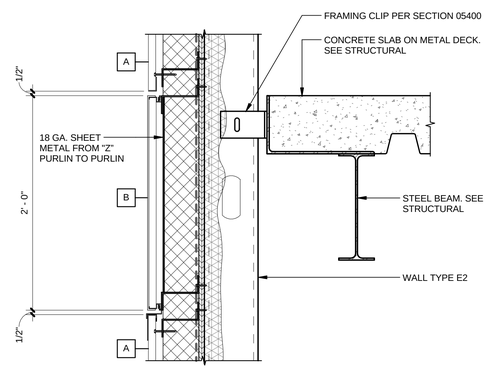

WALL DETAIL B4 AE503
1 1/2" = 1'-0"

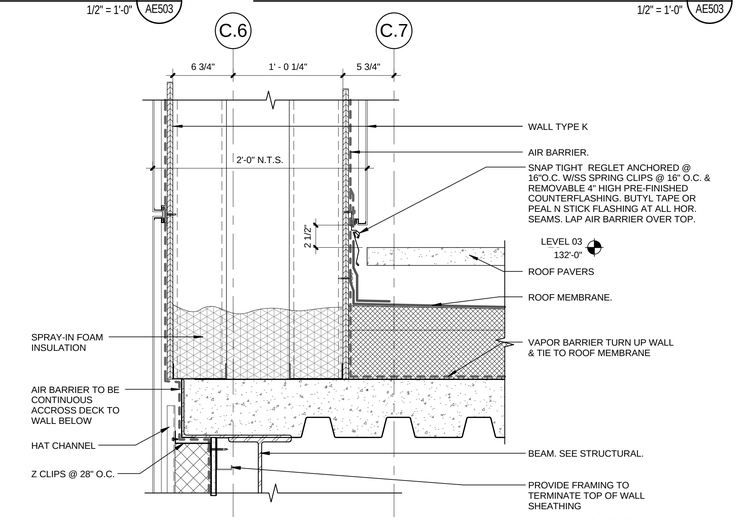

WALL DETAIL B5 AE503
1 1/2" = 1'-0"

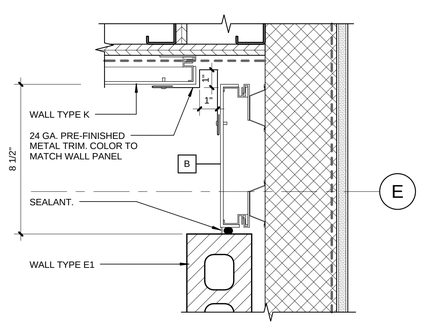

WALL DETAIL A4 AE503
3" = 1'-0"

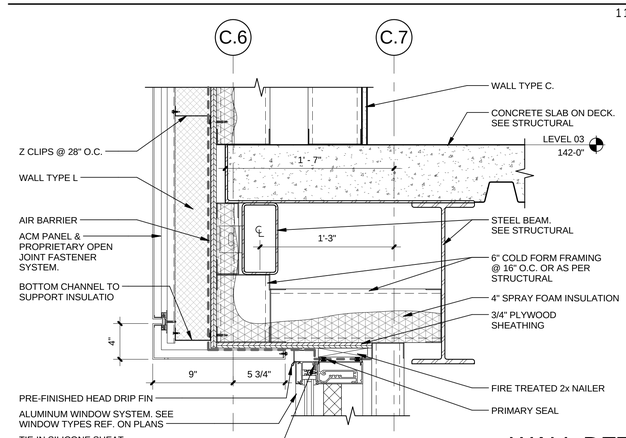

WALL DETAIL A5 AE503
1 1/2" = 1'-0"

CRSA
649 E. South Temple
Salt Lake City, UT 84102
801.355.5915

MWL
11798 N. Lakeridge Pkwy.
Ashland, VA 23005
804-228-7473

State of Utah
Department of Administrative Services
Division of Facilities Construction & Management
4110 State Office Building
Salt Lake City, Utah 84114
Phone: (801) 538 - 3018
Fax: (801) 538 - 3267

DIVISION OF FACILITIES CONSTRUCTION AND MANAGEMENT
REVIEWED FOR CODE COMPLIANCE
SIGNATURE: Ernie Calle
DATE: 08-05-2014

STATE OF UTAH #134098 MEHRDAD SAMIE LICENSED ARCHITECT
04.28.2014
ARCHITECT-ENGINEER STAMP

Unified State Laboratory Module 2

4451 South 2700 West, Taylorsville, UT 84118

DFCM #: 13020300
Project #: B13-024

DATE:	ISSUE TYPE:
APRIL 21, 2014	BID SET
CHECKED BY	Checker
DRAWN BY	F. PITORE

DETAILS

AE503

VOLUME 1

C:\Users\fernando\Documents_A_13024_Modll_2013_fernando.rvt
7/14/2014 12:37:49 PM

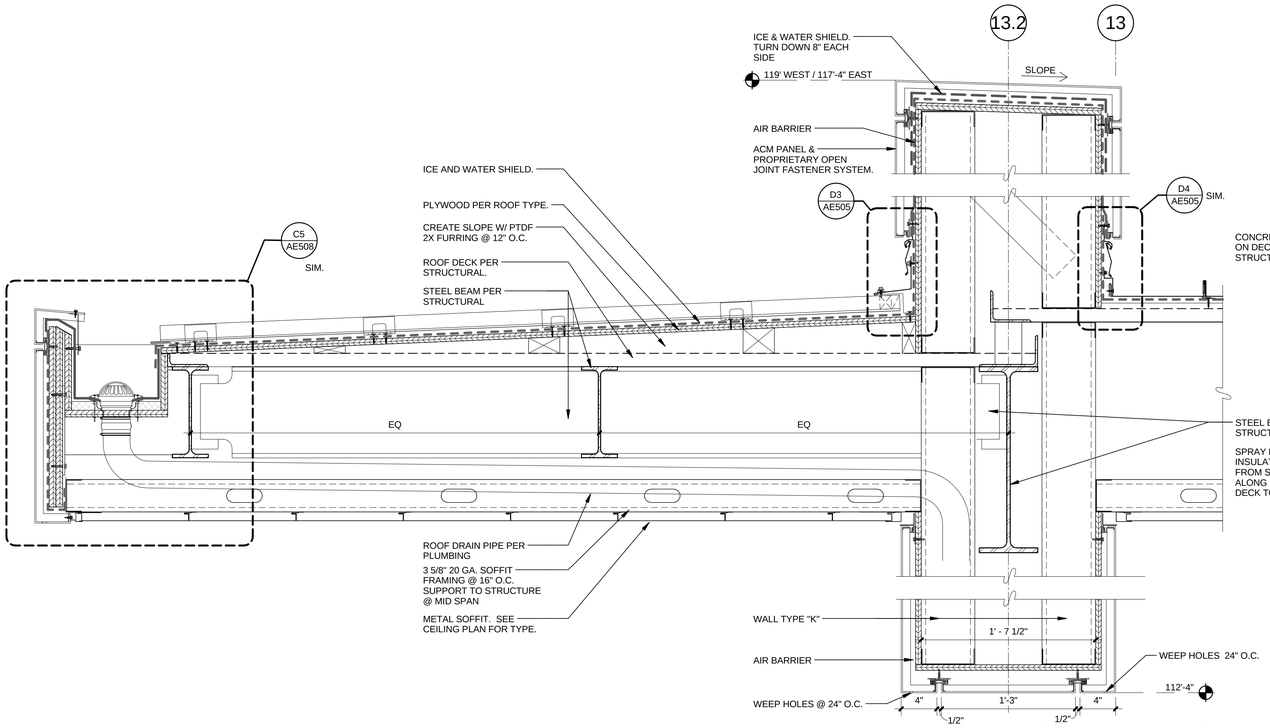

ROOF DETAIL C3 AE504
1 1/2" = 1'-0"

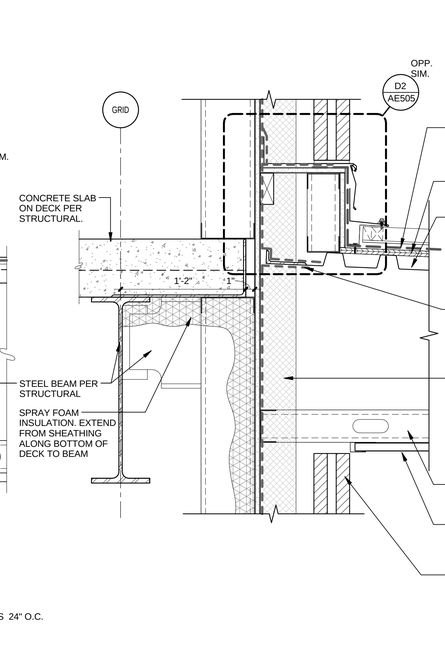

ROOF DETAIL C4 AE504
1 1/2" = 1'-0"

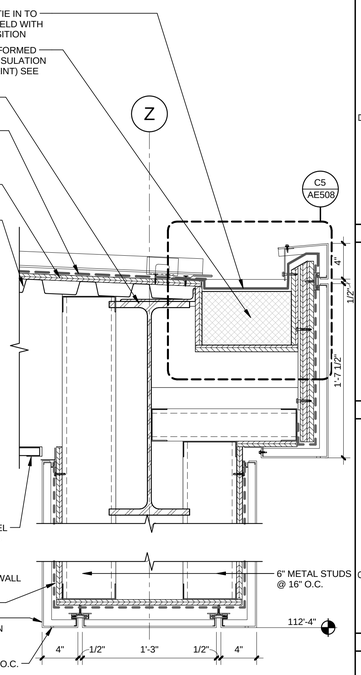

ROOF DETAIL C5 AE504
1 1/2" = 1'-0"

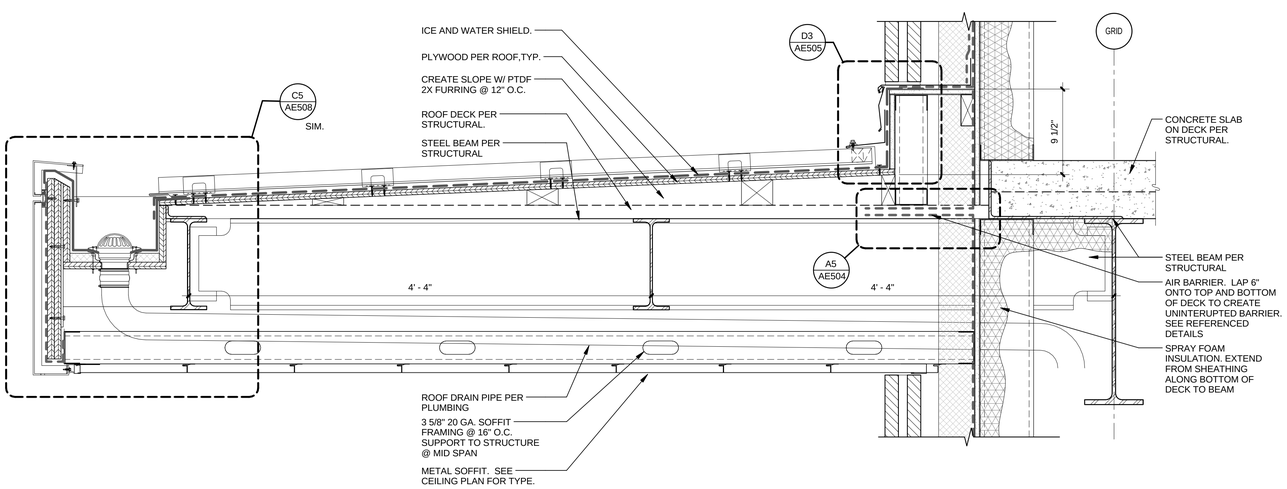

ROOF DETAIL A3 AE504
1 1/2" = 1'-0"

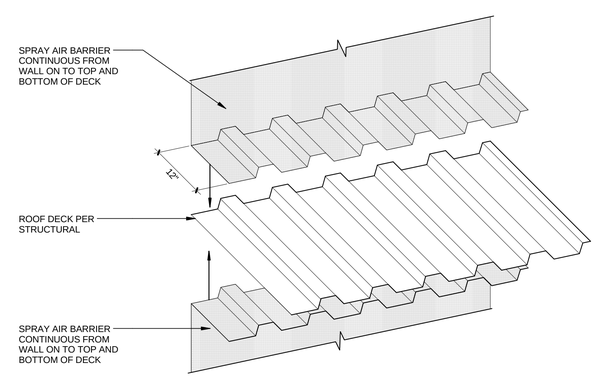

FLASHING DETAIL A5 AE504
1 1/2" = 1'-0"

CRSA
649 E. South Temple
Salt Lake City, UT 84102
801.355.5915

MWL
11798 N. Lakeridge Pkwy.
Ashland, VA 23005
804-228-7473

State of Utah
Department of Administrative Services
Division of Facilities Construction & Management
4110 State Office Building
Salt Lake City, Utah 84114
Phone: (801) 538 - 3018
Fax: (801) 538 - 3267

DIVISION OF FACILITIES CONSTRUCTION AND MANAGEMENT
REVIEWED FOR CODE COMPLIANCE
SIGNATURE: Ernie Cate
DATE: 08-05-2014

STATE OF UTAH #134096 MEHRDAD SAMII LICENSED ARCHITECT
04.28.2014
ARCHITECT-ENGINEER STAMP

Unified State Laboratory Module 2

4451 South 2700 West, Taylorsville, UT 84118

DFCM #: 13020300
Project #: B13-024

DATE:	ISSUE TYPE:
APRIL 21, 2014	BID SET
CHECKED BY	J. NIELSEN
DRAWN BY	F. PITORE

DETAILS

AE504

VOLUME 1

C:\Users\fernando\Documents_A_13024_Modli_2013_fernando.rvt
7/14/2014 12:38:10 PM

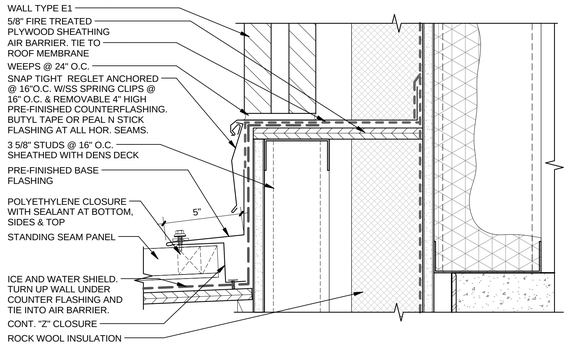

FLASHING DETAIL D2 / AE505
3" = 1'-0"

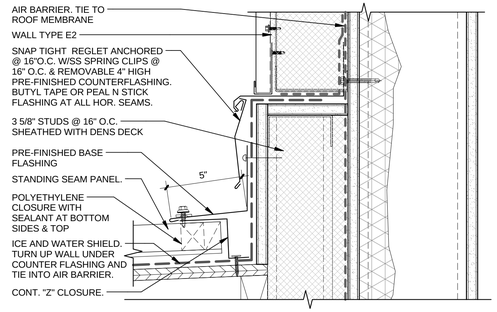

FLASHING DETAIL D3 / AE505
3" = 1'-0"

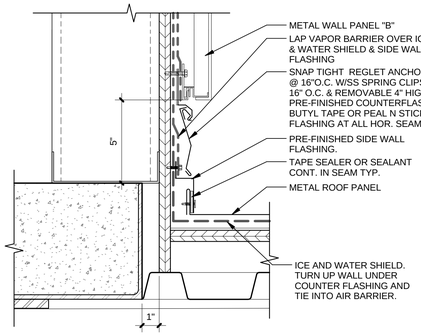

FLASHING DETAIL D4 / AE505
3" = 1'-0"

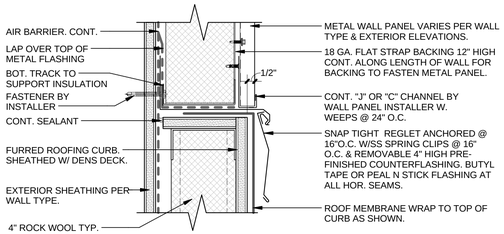

FLASHING DETAIL D5 / AE505
3" = 1'-0"

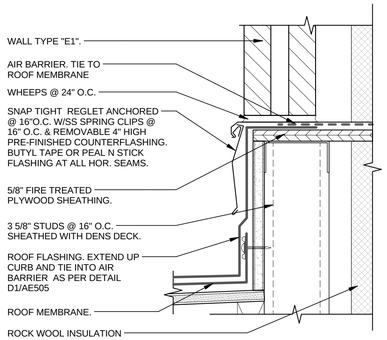

FLASHING DETAIL B2 / AE505
3" = 1'-0"

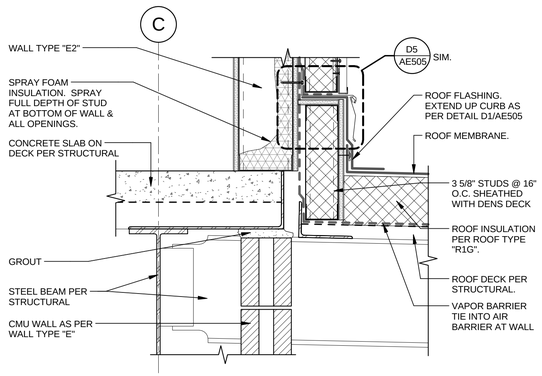

ROOF DETAIL B3 / AE505
1 1/2" = 1'-0"

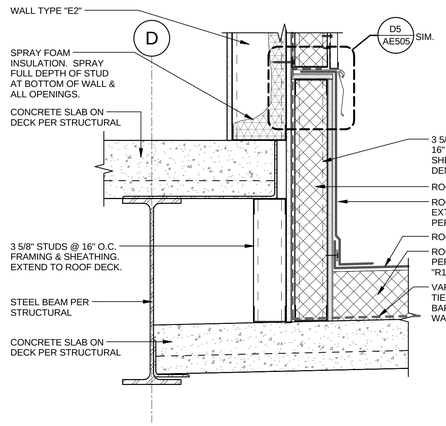

ROOF DETAIL B4 / AE505
1 1/2" = 1'-0"

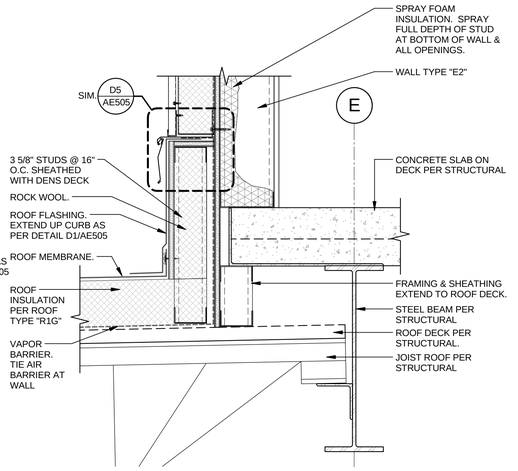

ROOF DETAIL B5 / AE505
1 1/2" = 1'-0"

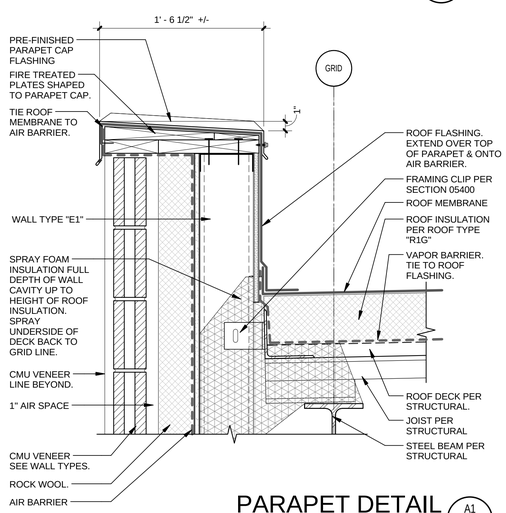

PARAPET DETAIL A1 / AE505
1 1/2" = 1'-0"

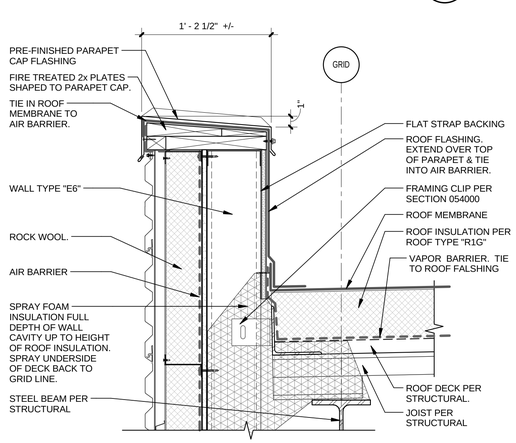

PARAPET DETAIL A3 / AE505
1 1/2" = 1'-0"

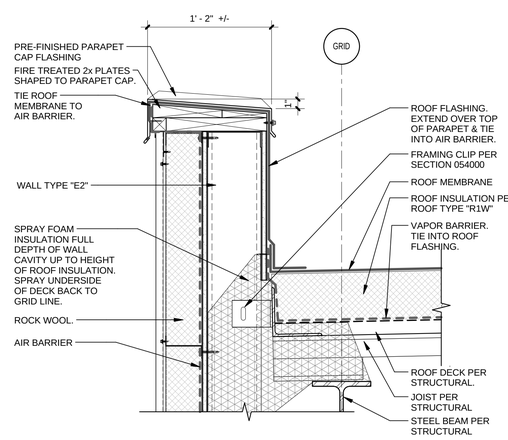

PARAPET DETAIL A4 / AE505
1 1/2" = 1'-0"

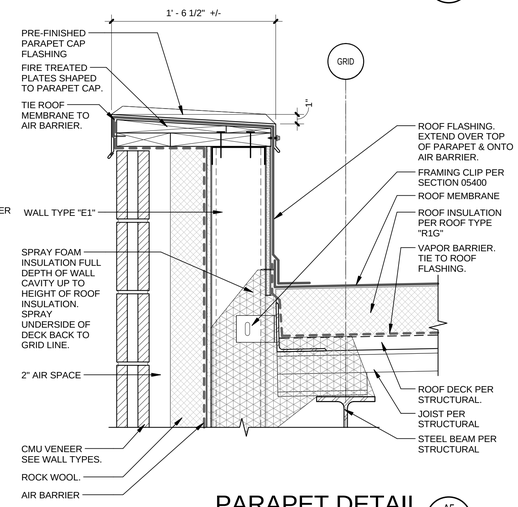

PARAPET DETAIL A5 / AE505
1 1/2" = 1'-0"

CRSA
649 E. South Temple
Salt Lake City, UT 84102
801.355.5915

MWL
11798 N. Lakeridge Pkwy.
Ashland, VA 23005
804-228-7473

State of Utah
Department of Administrative Services
DFCM
Division of Facilities Construction & Management
4110 State Office Building
Salt Lake City, Utah 84114
Phone: (801) 538 - 3018
Fax: (801) 538 - 3267

DIVISION OF FACILITIES CONSTRUCTION AND MANAGEMENT
REVIEWED FOR CODE COMPLIANCE
SIGNATURE: Ernie Cate
DATE: 08-05-2014

STATE OF UTAH #134096 MEHRDAD SAMIE LICENSED ARCHITECT
04-28-2014
ARCHITECT-ENGINEER STAMP

Unified State Laboratory Module 2

4451 South 2700 West, Taylorsville, UT 84118

DFCM #: 13020300

Project #: B13-024

DATE:	ISSUE TYPE:
APRIL 21, 2014	BID SET
CHECKED BY	J. NIELSEN
DRAWN BY	F. PITORE

DETAILS

AE505

VOLUME 1

C:\Users\fernando\Documents_A_13024_Modll_2013_fernando.rvt
7/14/2014 12:38:24 PM

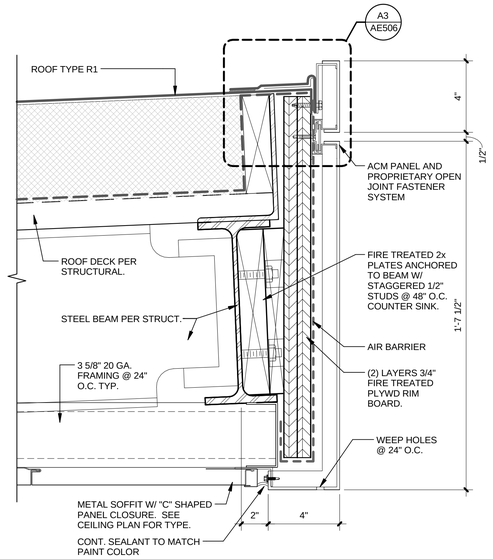

ROOF DETAIL C1 / AE506
3" = 1'-0"

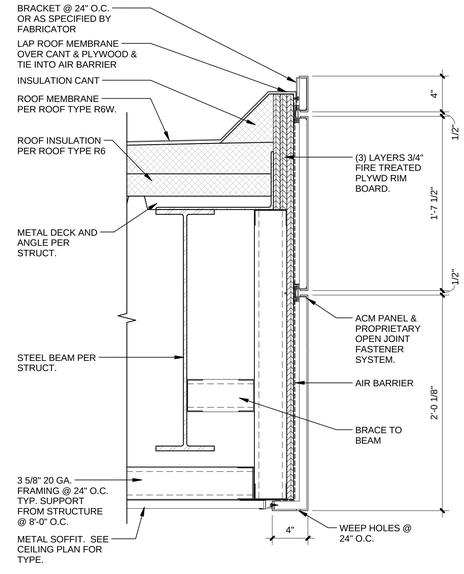

ROOF DETAIL C3 / AE506
1 1/2" = 1'-0"

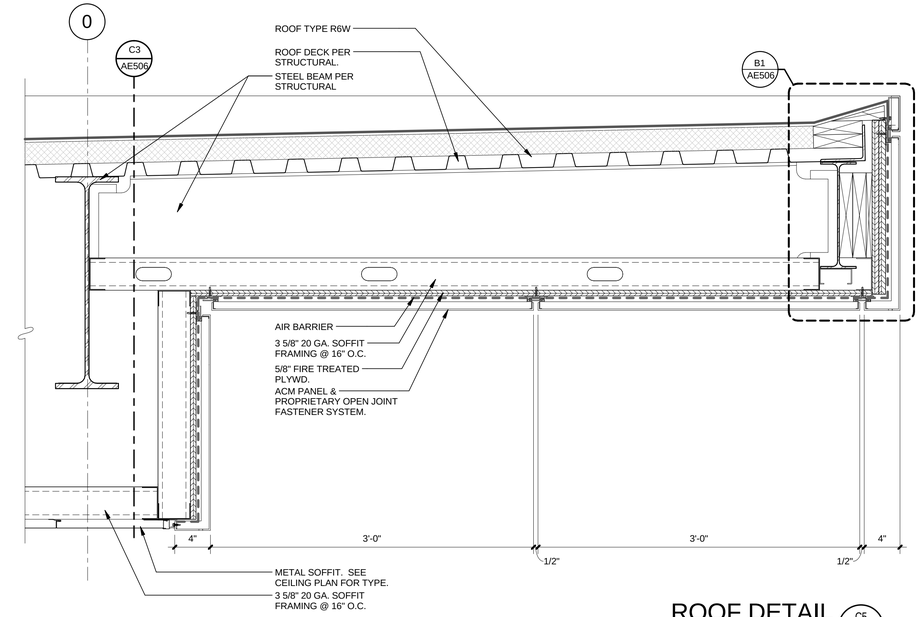

ROOF DETAIL C5 / AE506
1 1/2" = 1'-0"

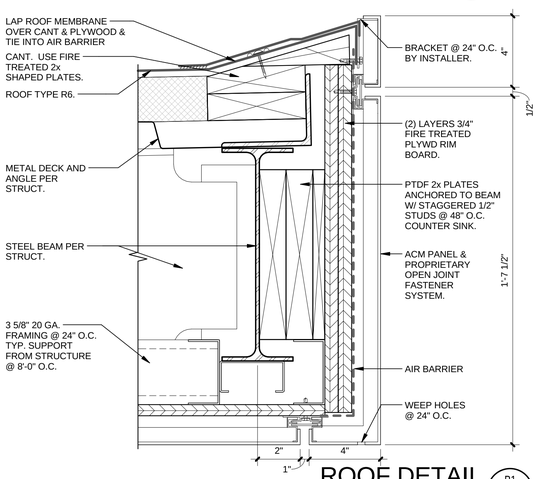

ROOF DETAIL B1 / AE506
3" = 1'-0"

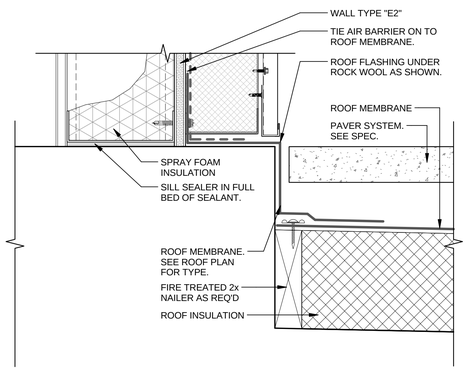

ROOF DETAIL B3 / AE506
3" = 1'-0"

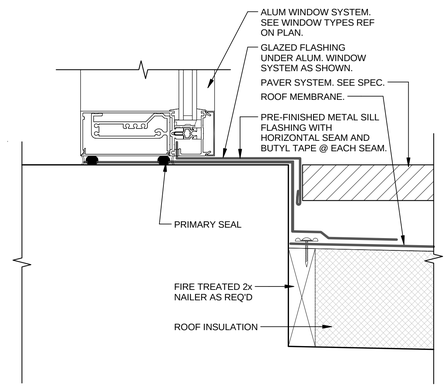

ROOF DETAIL B4 / AE506
3" = 1'-0"

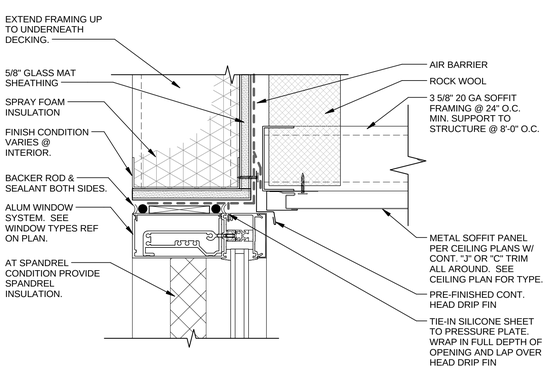

WINDOW / SOFFIT DETAIL A1 / AE506
3" = 1'-0"

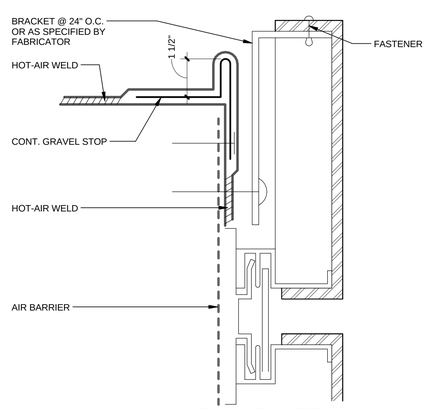

ROOF DETAIL A3 / AE506
6" = 1'-0"

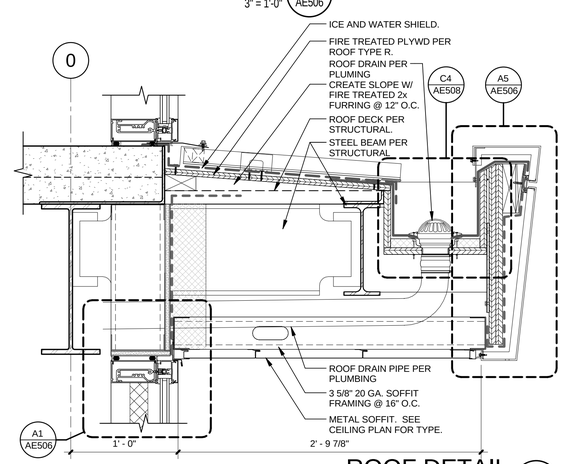

ROOF DETAIL A4 / AE506
1 1/2" = 1'-0"

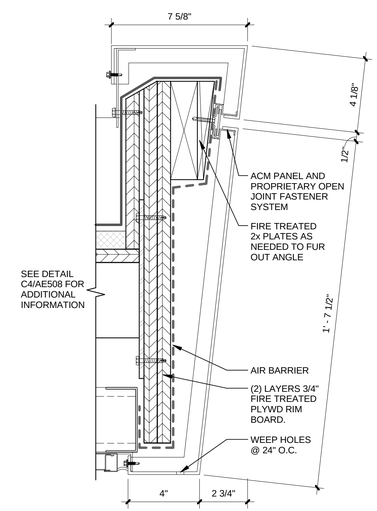

ROOF DETAIL A5 / AE506
3" = 1'-0"

CRSA
649 E. South Temple
Salt Lake City, UT 84102
801.355.5915

MWL
11798 N. Lakeridge Pkwy.
Ashland, VA 23005
804-228-7473

State of Utah
Department of Administrative Services
Division of Facilities Construction & Management
4110 State Office Building
Salt Lake City, Utah 84114
Phone: (801) 538 - 3018
Fax: (801) 538 - 3267

DIVISION OF FACILITIES CONSTRUCTION AND MANAGEMENT
REVIEWED FOR CODE COMPLIANCE
SIGNATURE: Ernie Calle
DATE: 08-05-2014

STATE OF UTAH #134096 MEHRDAD SAMIE LICENSED ARCHITECT
04.28.2014
ARCHITECT-ENGINEER STAMP

Unified State Laboratory Module 2

4451 South 2700 West, Taylorsville, UT 84118

DFCM #: 13020300

Project #: B13-024

DATE:	ISSUE TYPE:
APRIL 21, 2014	BID SET
CHECKED BY	J. NIELSEN
DRAWN BY	F. PITORE

DETAILS

AE506

VOLUME 1

C:\Users\fernando\Documents_A_13024_Modl_2013_fernando.rvt
7/14/2014 12:38:36 PM

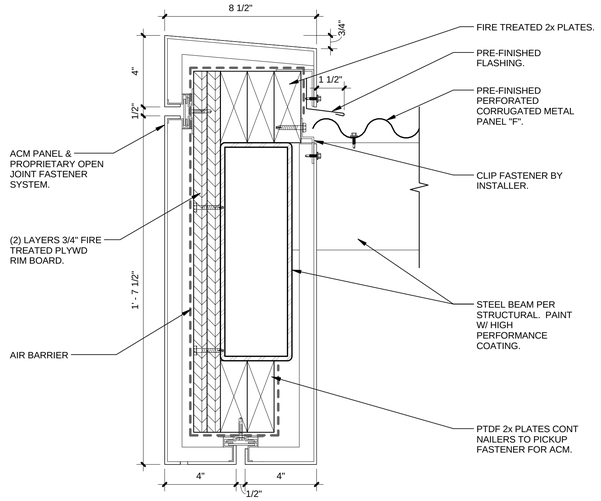

CANOPY DETAIL (C2 / AE507)

3" = 1'-0"

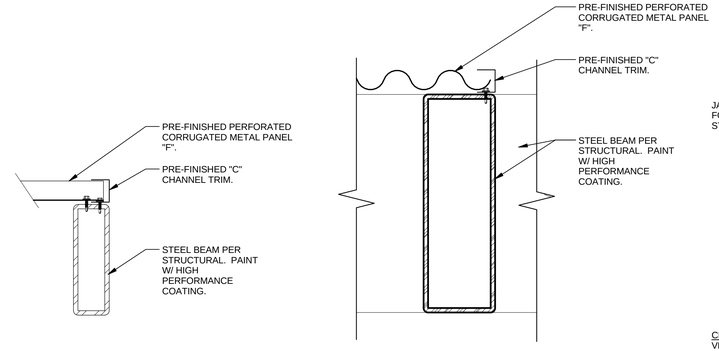

CANOPY DETAIL (C3 / AE507)

3" = 1'-0"

TYPICAL BEAM PENETRATION APPLICATION

SEALANTS NOT SHOWN FOR CLARITY
DESIGN PROPER CLEARANCES TO ACCOMMODATE MOVEMENTS

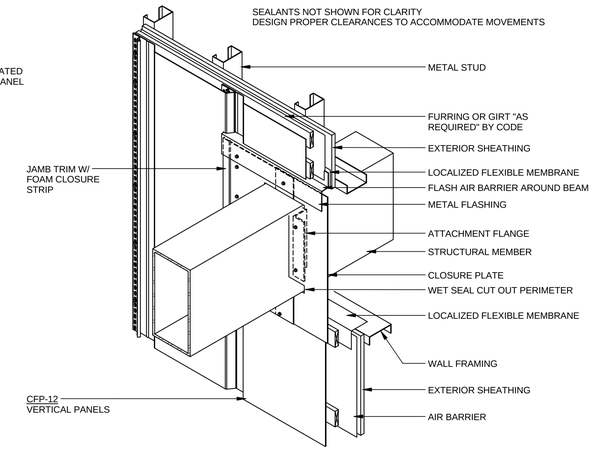

CANOPY BEAM PENETRATION (C5 / AE507)

N.T.S.

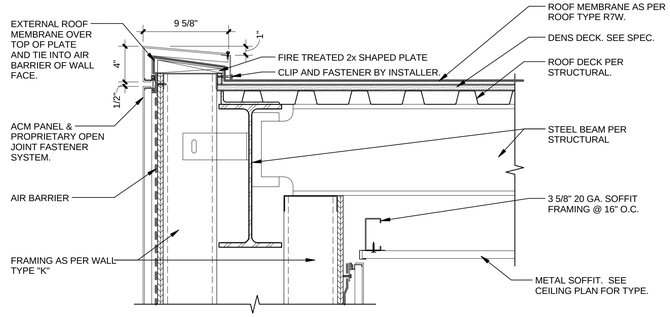

ROOF DETAIL (B2 / AE507)

1 1/2" = 1'-0"

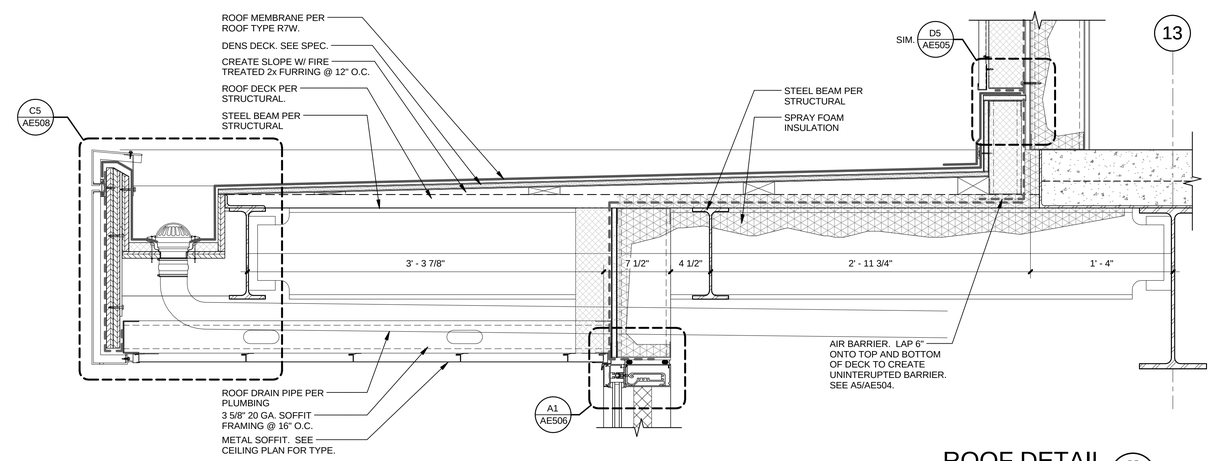

ROOF DETAIL (B5 / AE507)

1 1/2" = 1'-0"

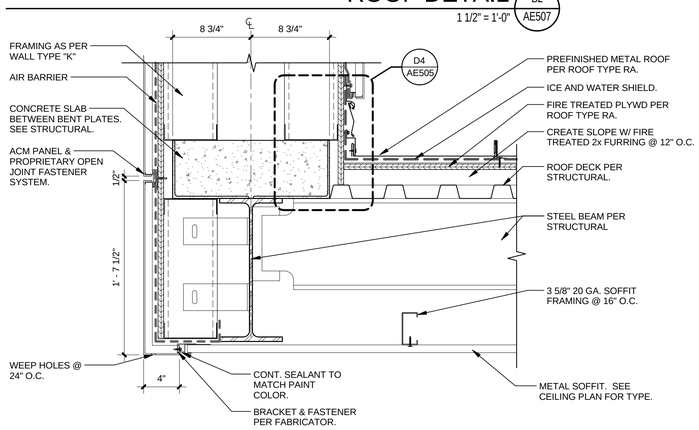

ROOF DETAIL (A2 / AE507)

1 1/2" = 1'-0"

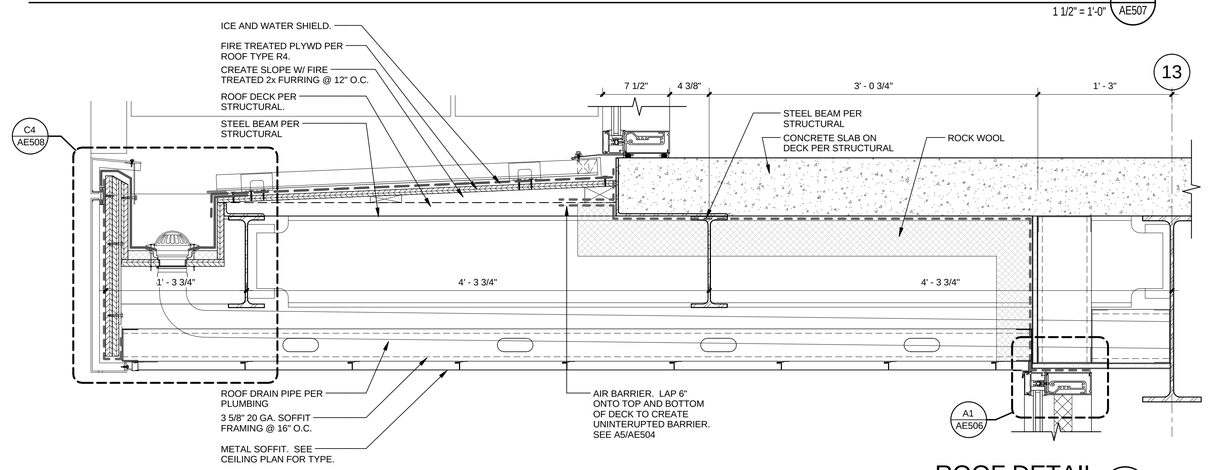

ROOF DETAIL (A5 / AE507)

1 1/2" = 1'-0"

CRSA
649 E. South Temple
Salt Lake City, UT 84102
801.355.5915

MWL
11798 N. Lakeridge Pkwy.
Ashland, VA 23005
804-228-7473

State of Utah
Department of Administrative Services
Division of Facilities Construction & Management
4110 State Office Building
Salt Lake City, Utah 84114
Phone: (801) 538 - 3018
Fax: (801) 538 - 3267

DIVISION OF FACILITIES CONSTRUCTION AND MANAGEMENT
REVIEWED FOR CODE COMPLIANCE
SIGNATURE: Ernie Calle
DATE: 08-05-2014

STATE OF UTAH #134096 MEHRDAD SAMIE LICENSED ARCHITECT
04-28-2014
ARCHITECT-ENGINEER STAMP

Unified State Laboratory Module 2

4451 South 2700 West, Taylorsville, UT 84118

DFCM #: 13020300
Project #: B13-024

DATE:	ISSUE TYPE:
APRIL 21, 2014	BID SET
CHECKED BY	J. NIELSEN
DRAWN BY	F. PITORE

DETAILS

AE507

VOLUME 1

C:\Users\fernando\Documents_A_13024_Modil_2013_fernando.rvt
7/14/2014 12:38:44 PM

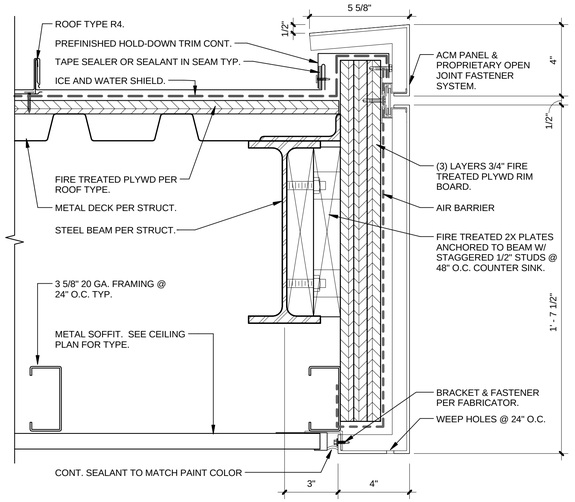

ROOF DETAIL B2 / AE508

3" = 1'-0"

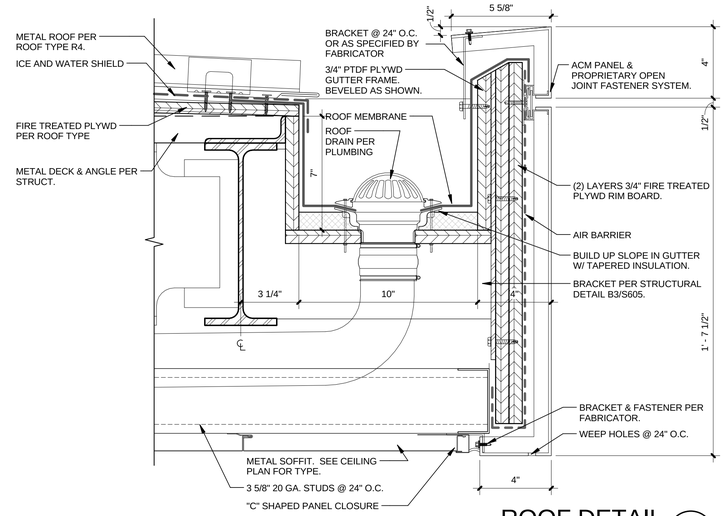

ROOF DETAIL C4 / AE508

3" = 1'-0"

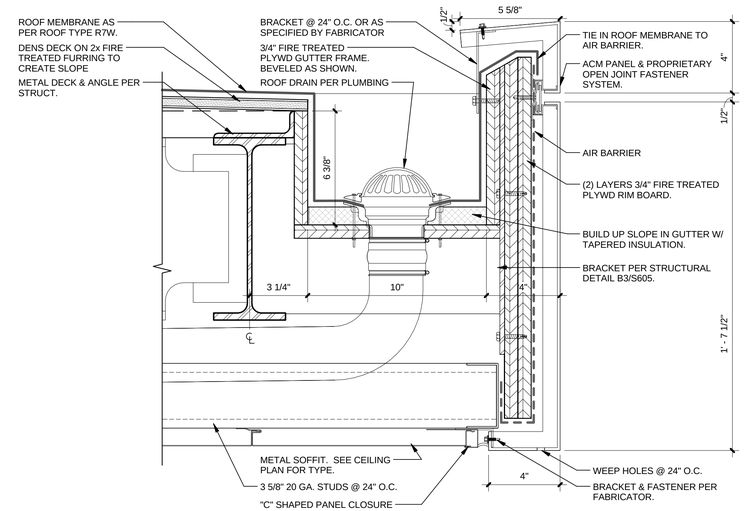

ROOF DETAIL C5 / AE508

3" = 1'-0"

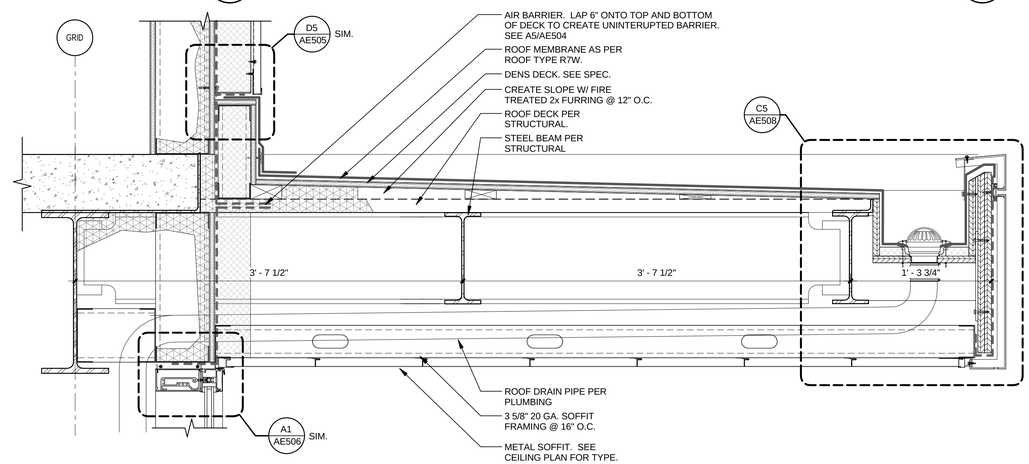

ROOF DETAIL B4 / AE508

1 1/2" = 1'-0"

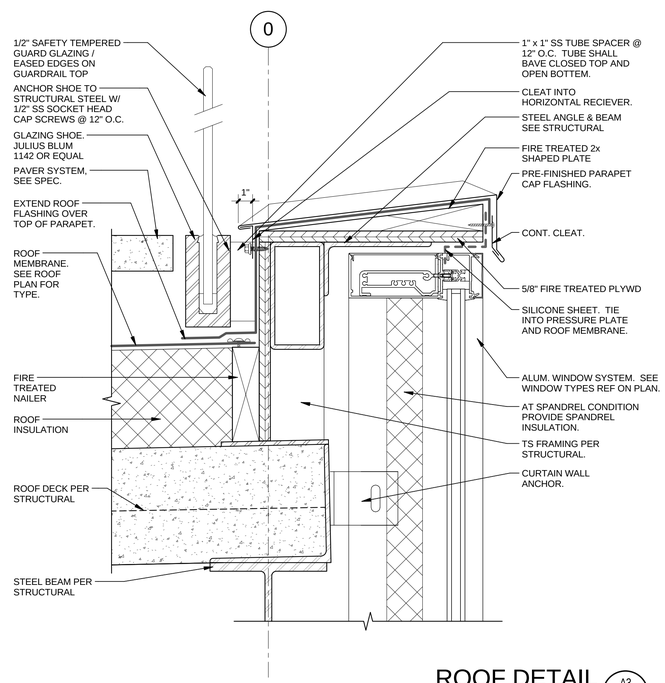

ROOF DETAIL A3 / AE508

3" = 1'-0"

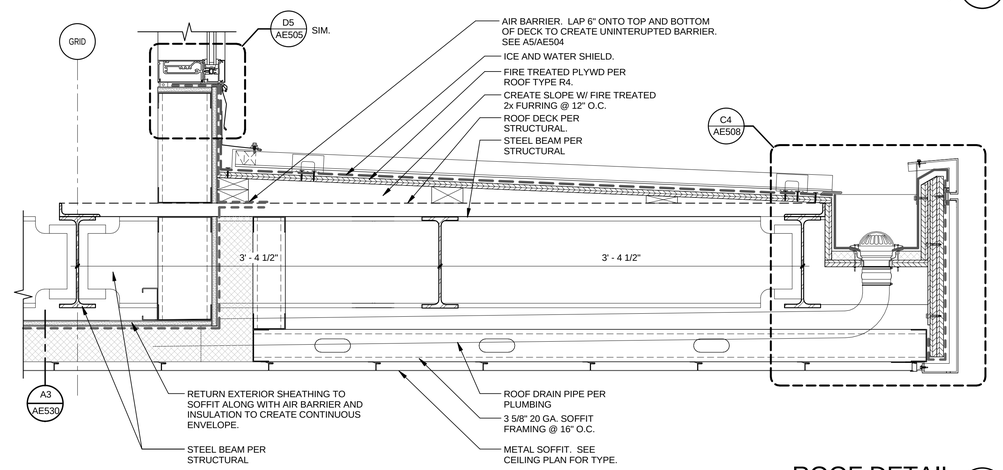

ROOF DETAIL A4 / AE508

1 1/2" = 1'-0"

CRSA

649 E. South Temple
Salt Lake City, UT 84102
801.355.5915

MWL

11798 N. Lakeridge Pkwy.
Ashland, VA 23005
804-228-7473

State of Utah
Department of Administrative Services
Division of Facilities Construction & Management
4110 State Office Building
Salt Lake City, Utah 84114
Phone: (801) 538 - 3018
Fax: (801) 538 - 3267

DIVISION OF FACILITIES CONSTRUCTION AND MANAGEMENT
REVIEWED FOR CODE COMPLIANCE
SIGNATURE: Ernie Calle
DATE: 08-05-2014

STATE OF UTAH #134096 MEHRDAD SAMIE LICENSED ARCHITECT
04-28-2014
ARCHITECT-ENGINEER STAMP

Unified State Laboratory Module 2

4451 South 2700 West, Taylorsville, UT 84118

DFCM #: 13020300

Project #: B13-024

DATE:	ISSUE TYPE:
APRIL 21, 2014	BID SET

CHECKED BY	J. NIELSEN
DRAWN BY	F. PITORE

DETAILS

AE508

VOLUME 1

C:\Users\fernando\Documents_A_13024_Modli_2013_fernando.rvt
7/14/2014 12:38:52 PM

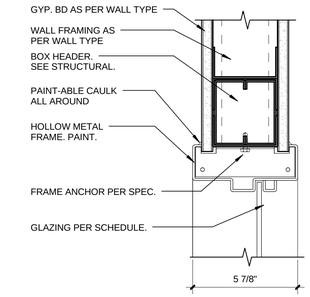

HEAD D1 AE510
3" = 1'-0"

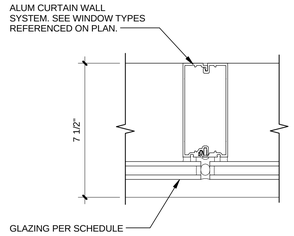

MULLION D2 AE510
3" = 1'-0"

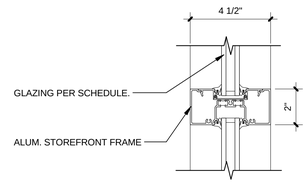

MULLION D3 AE510
3" = 1'-0"

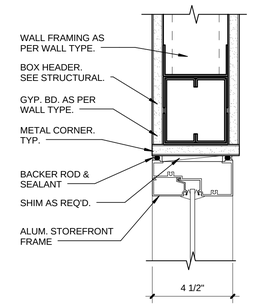

HEAD D4 AE510
3" = 1'-0"

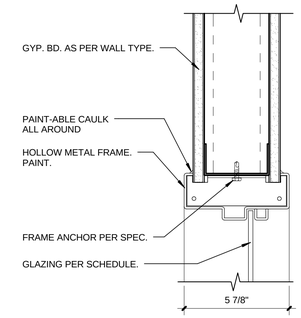

HEAD D5 AE510
3" = 1'-0"

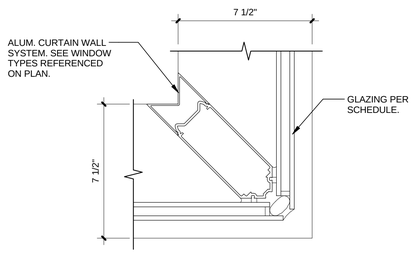

MULLION C1 AE510
3" = 1'-0"

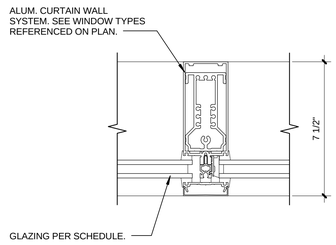

MULLION C2 AE510
3" = 1'-0"

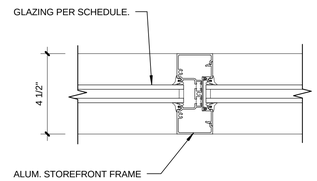

MULLION C3 AE510
3" = 1'-0"

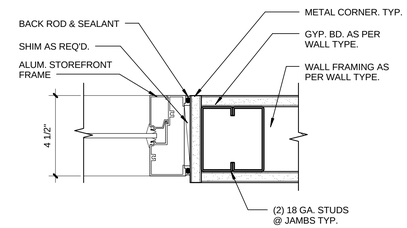

JAMB C4 AE510
3" = 1'-0"

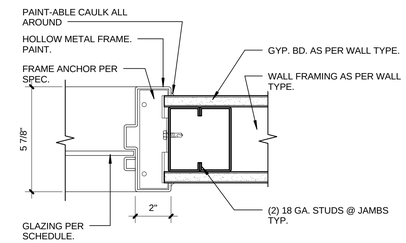

JAMB C5 AE510
3" = 1'-0"

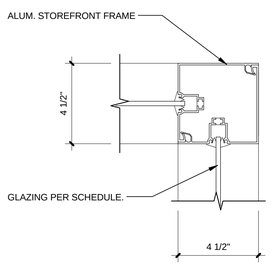

MULLION B1 AE510
3" = 1'-0"

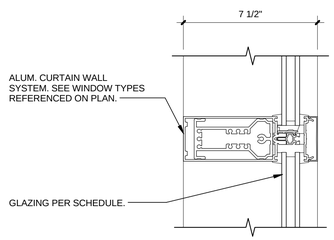

MULLION B2 AE510
3" = 1'-0"

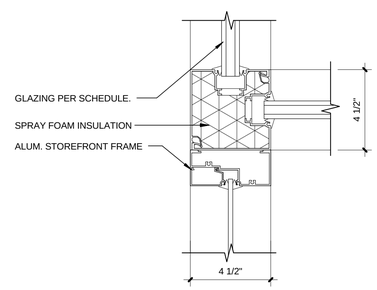

JAMB B3 AE510
3" = 1'-0"

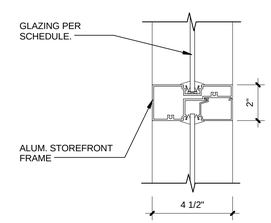

MULLION B4 AE510
3" = 1'-0"

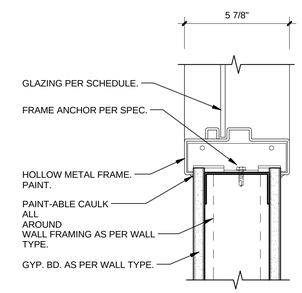

SILL B5 AE510
3" = 1'-0"

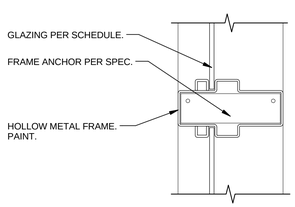

MULLION A1 AE510
3" = 1'-0"

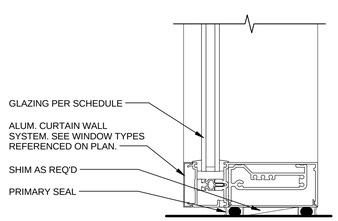

SILL A2 AE510
3" = 1'-0"

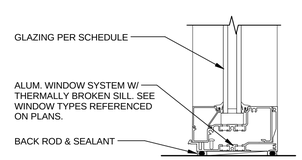

SILL A3 AE510
3" = 1'-0"

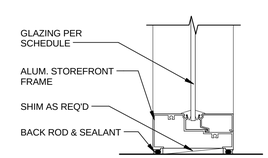

SILL A4 AE510
3" = 1'-0"

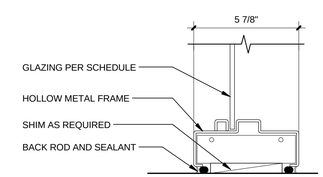

SILL A5 AE510
3" = 1'-0"

CRSA
649 E. South Temple
Salt Lake City, UT 84102
801.355.5915

MWL
11798 N. Lakeridge Pkwy.
Ashland, VA 23005
804-228-7473

State of Utah
Department of Administrative Services
DFCM
Division of Facilities Construction & Management
4110 State Office Building
Salt Lake City, Utah 84114
Phone: (801) 538 - 3018
Fax: (801) 538 - 3267

DIVISION OF FACILITIES CONSTRUCTION AND MANAGEMENT
REVIEWED FOR CODE COMPLIANCE
SIGNATURE: Eric Calk
DATE: 08-05-2014

STATE OF UTAH #134096 MEHRDAD SAMIE LICENSED ARCHITECT
04.28.2014
ARCHITECT-ENGINEER STAMP

Unified State Laboratory Module 2

4451 South 2700 West, Taylorsville, UT 84118

DFCM #: 13020300
Project #: B13-024

DATE:	ISSUE TYPE:
APRIL 21, 2014	BID SET
CHECKED BY	J. NIELSEN
DRAWN BY	F. PITORE

DETAILS

AE510

VOLUME 1

C:\Users\fernando\Documents_A_13024_Modli_2013_fernando.rvt
7/14/2014 12:38:59 PM

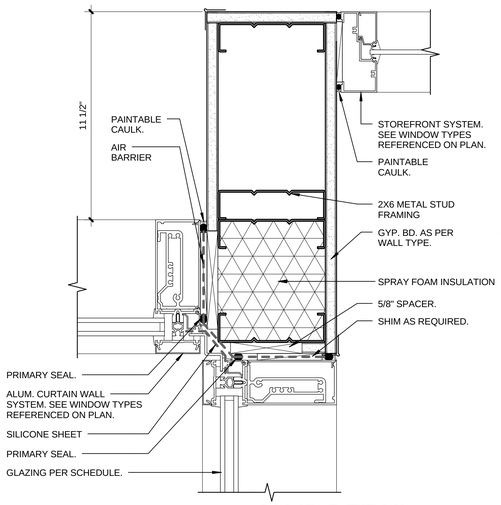

JAMB DETAIL C1 AE511
3" = 1'-0"

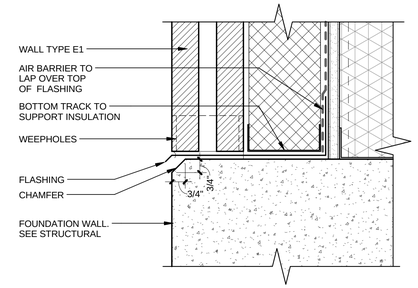

WALL DETAIL D2 AE511
3" = 1'-0"

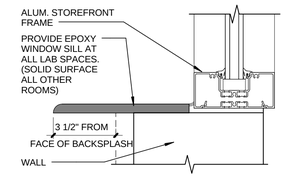

SILL D4 AE511
3" = 1'-0"

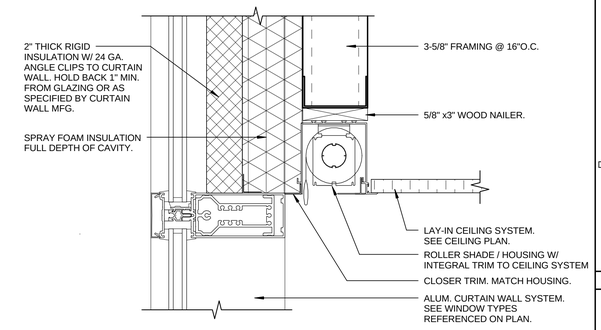

WINDOW SHADE DETAIL D5 AE511
3" = 1'-0"

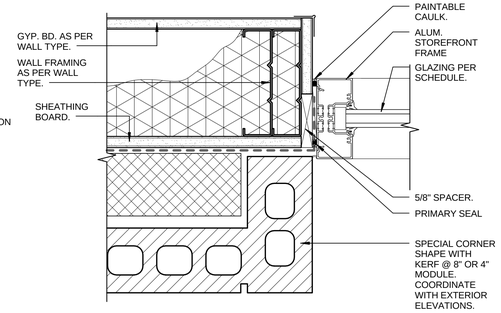

JAMB C2 AE511
3" = 1'-0"

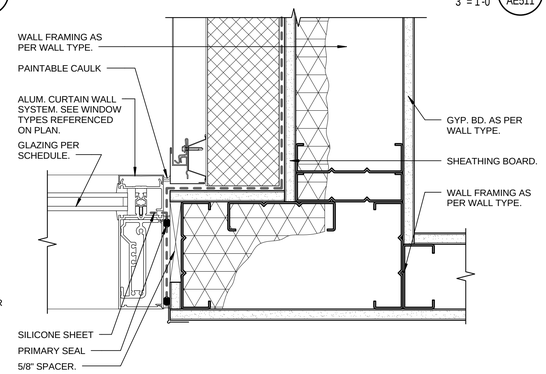

JAMB C4 AE511
3" = 1'-0"

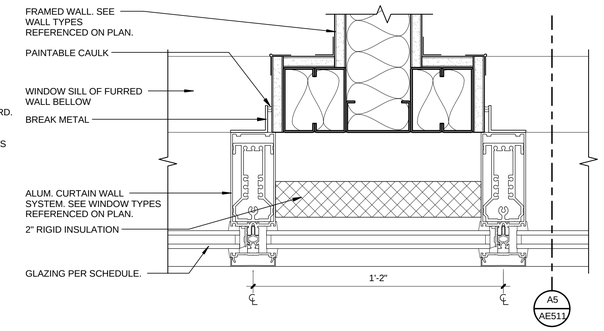

WINDOW TO WALL DETAIL C5 AE511
3" = 1'-0"

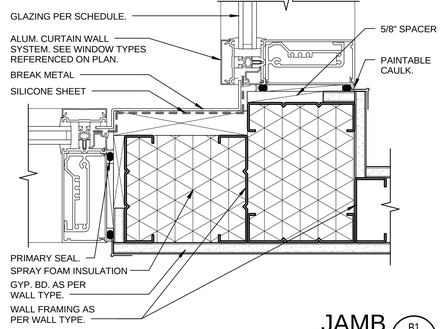

JAMB B1 AE511
3" = 1'-0"

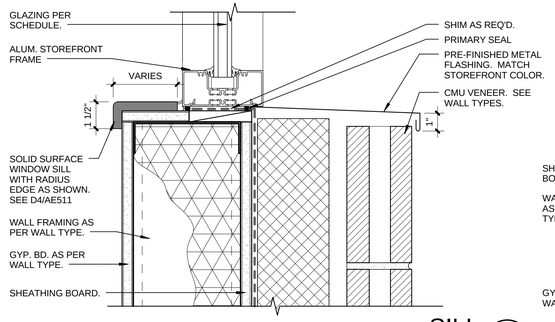

SILL B2 AE511
3" = 1'-0"

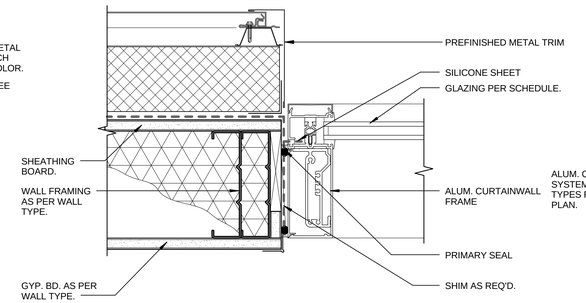

JAMB B4 AE511
3" = 1'-0"

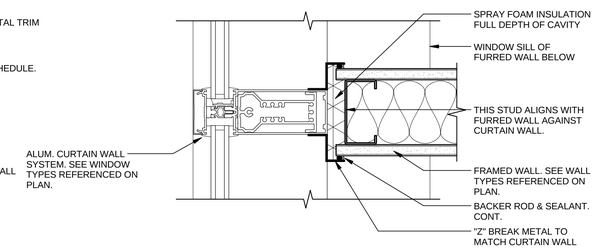

WINDOW TO WALL DETAIL B5 AE511
3" = 1'-0"

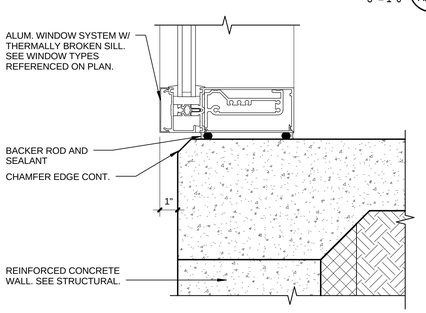

SILL A1 AE511
3" = 1'-0"

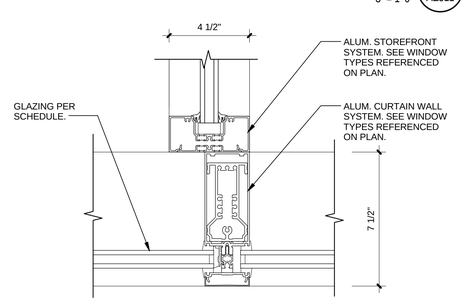

MULLION A2 AE511
3" = 1'-0"

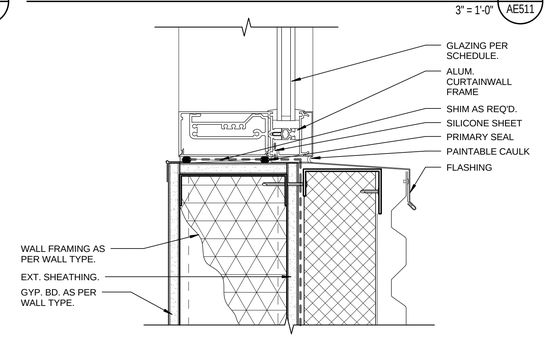

SILL A4 AE511
3" = 1'-0"

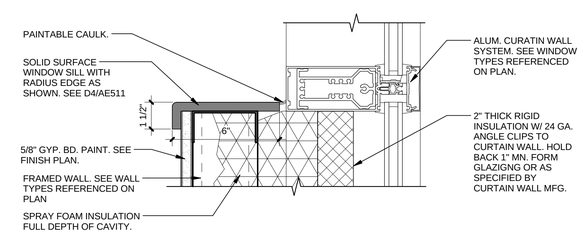

WINDOW SILL DETAIL A5 AE511
3" = 1'-0"

CRSA
649 E. South Temple
Salt Lake City, UT 84102
801.355.5915

MWL
11798 N. Lakeridge Pkwy.
Ashland, VA 23005
804-228-7473

State of Utah
Department of Administrative Services
Division of Facilities Construction & Management
4110 State Office Building
Salt Lake City, Utah 84114
Phone: (801) 538 - 3018
Fax: (801) 538 - 3267

DIVISION OF FACILITIES CONSTRUCTION AND MANAGEMENT
REVIEWED FOR CODE COMPLIANCE
SIGNATURE: Eric Galt
DATE: 08-05-2014

STATE OF UTAH #134096 MEHRDAD SAMIE LICENSED ARCHITECT
04-28-2014
ARCHITECT-ENGINEER STAMP

Unified State Laboratory Module 2

4451 South 2700 West, Taylorsville, UT 84118

DFCM #: 13020300

Project #: B13-024

DATE:	ISSUE TYPE:
APRIL 21, 2014	BID SET
CHECKED BY	J. NIELSEN
DRAWN BY	F. PITORE

DETAILS

AE511

VOLUME 1

C:\Users\fernando\Documents_A_13024_Modil_2013_fernando.rvt
7/14/2014 12:39:09 PM

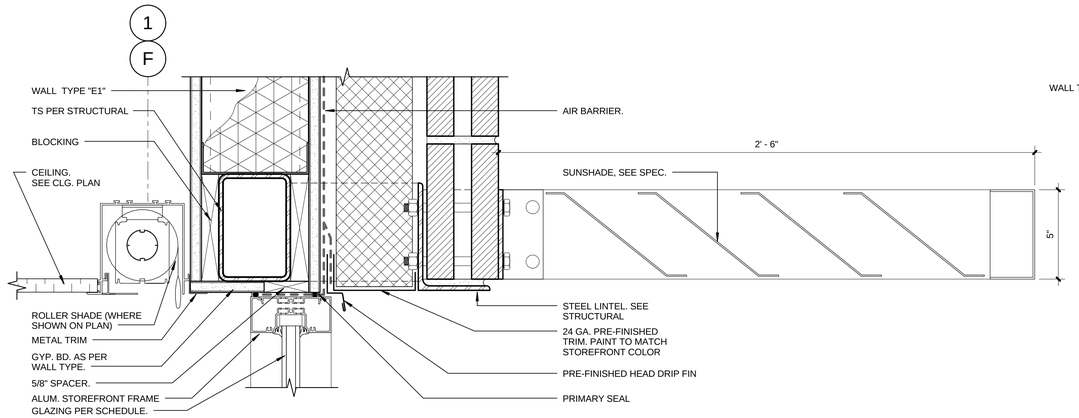

HEADER DETAIL D4 / AE512
3" = 1'-0"

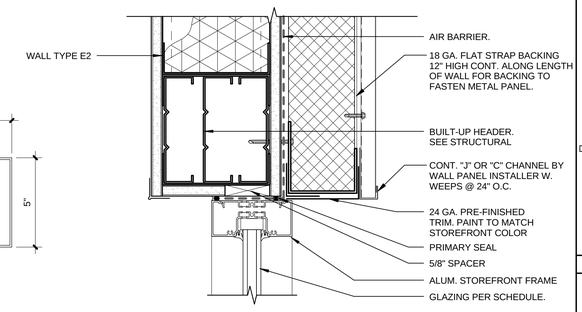

HEAD D5 / AE512
3" = 1'-0"

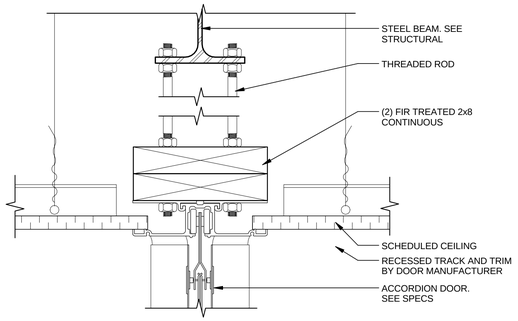

HEAD C1 / AE512
3" = 1'-0"

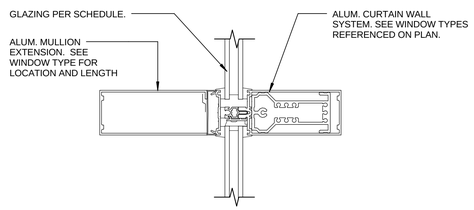

HORIZONTAL MULLION C3 / AE512
3" = 1'-0"

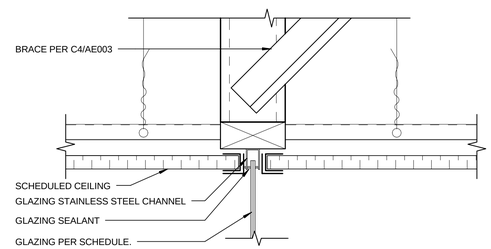

HEAD C4 / AE512
3" = 1'-0"

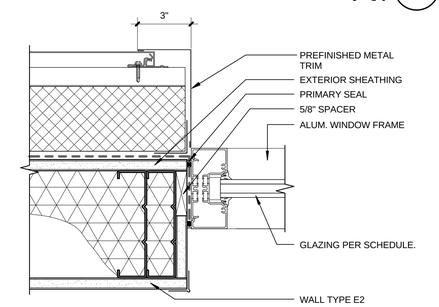

JAMB C5 / AE512
3" = 1'-0"

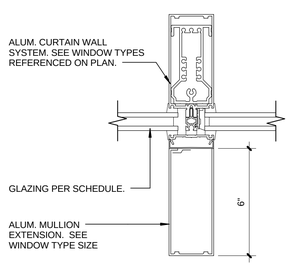

VERTICAL MULLION B2 / AE512
3" = 1'-0"

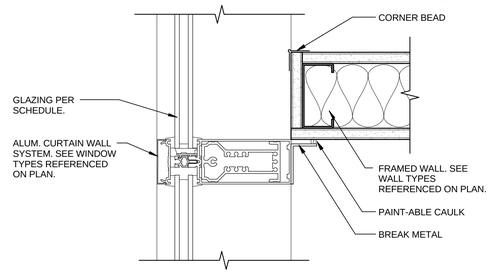

JAMB B3 / AE512
3" = 1'-0"

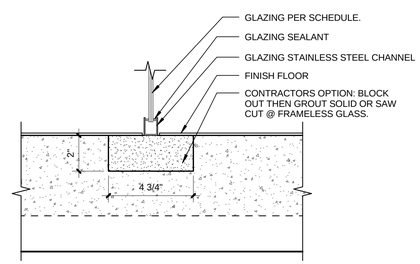

SILL B4 / AE512
3" = 1'-0"

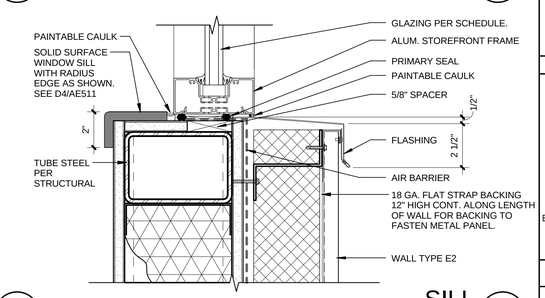

SILL B5 / AE512
3" = 1'-0"

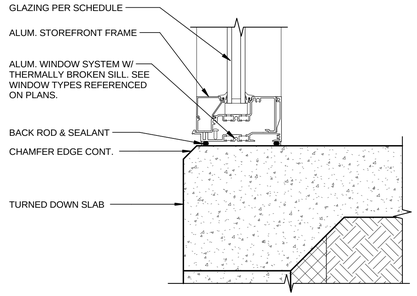

SILL A2 / AE512
3" = 1'-0"

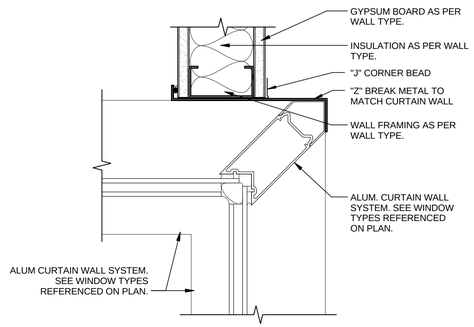

INSIDE CORNER WINDOW DETAIL A3 / AE512
3" = 1'-0"

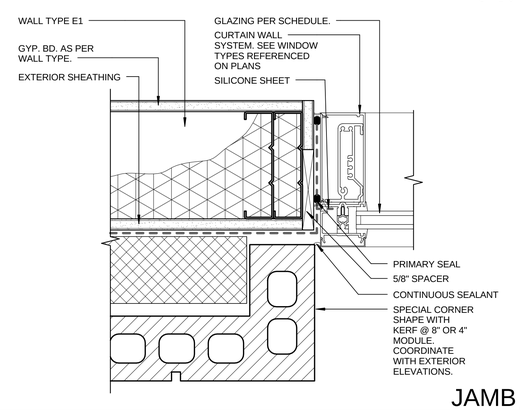

JAMB A4 / AE512
3" = 1'-0"

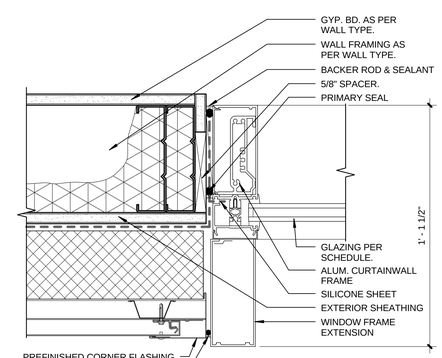

JAMB A5 / AE512
3" = 1'-0"

CRSA
649 E. South Temple
Salt Lake City, UT 84102
801.355.5915

MWL
11798 N. Lakeridge Pkwy.
Ashland, VA 23005
804-228-7473

State of Utah
Department of Administrative Services
DFCM
Division of Facilities Construction & Management
4110 State Office Building
Salt Lake City, Utah 84114
Phone: (801) 538 - 3018
Fax: (801) 538 - 3267

DIVISION OF FACILITIES CONSTRUCTION AND MANAGEMENT
REVIEWED FOR CODE COMPLIANCE
SIGNATURE: Ernie Calle
DATE: 08-05-2014

STATE OF UTAH #134096 MEHRDAD SAMIE LICENSED ARCHITECT
04.28.2014
ARCHITECT-ENGINEER STAMP

Unified State Laboratory Module 2

4451 South 2700 West, Taylorsville, UT 84118

DFCM #: 13020300
Project #: B13-024

DATE:	ISSUE TYPE:
APRIL 21, 2014	BID SET
CHECKED BY	J. NIELSEN
DRAWN BY	F. PITORE

DETAILS

AE512

VOLUME 1

C:\Users\fernando\Documents_A_13024_Modil_2013_fernando.rvt
7/14/2014 12:39:20 PM

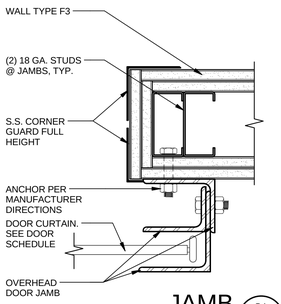

JAMB D1 / AE513
3" = 1'-0"

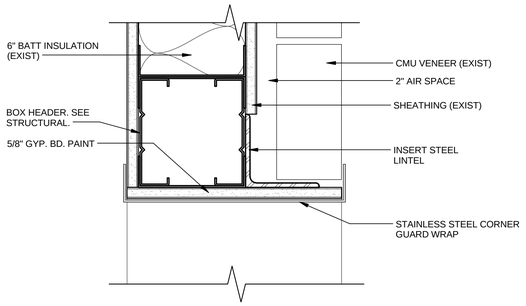

WALL OPENING HEADER D2 / AE513
3" = 1'-0"

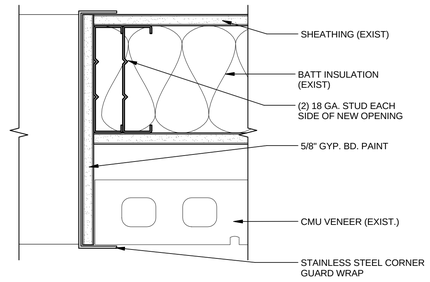

WALL OPENING DETAIL D3 / AE513
3" = 1'-0"

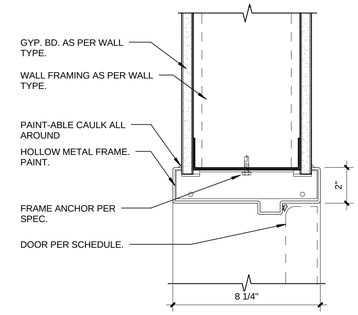

HEAD D4 / AE513
3" = 1'-0"

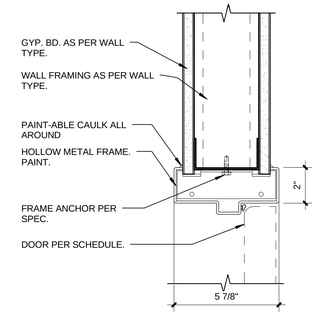

HEAD D5 / AE513
3" = 1'-0"

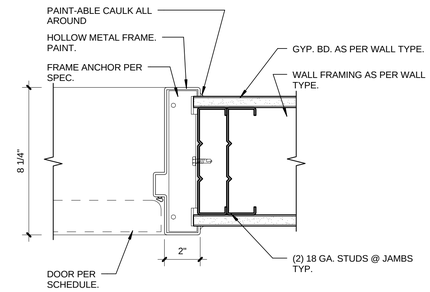

JAMB C4 / AE513
3" = 1'-0"

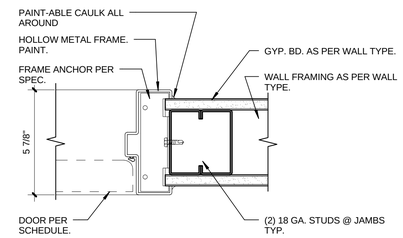

JAMB C5 / AE513
3" = 1'-0"

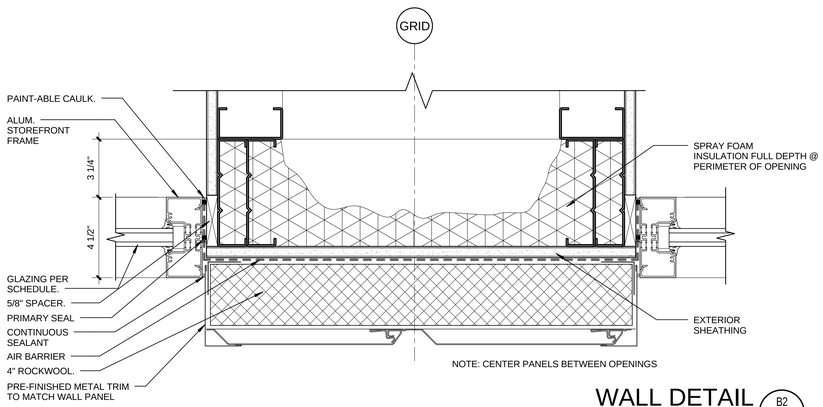

WALL DETAIL B2 / AE513
3" = 1'-0"

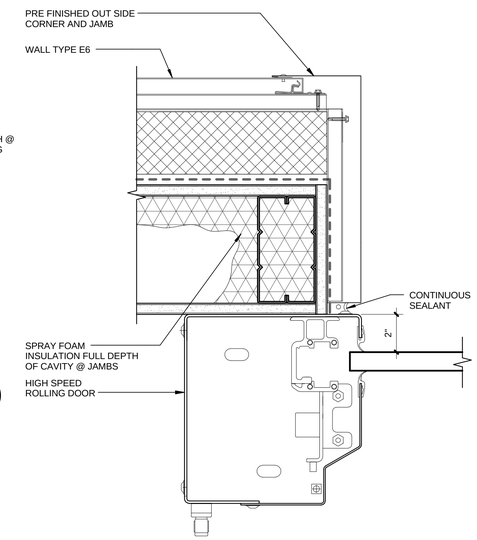

JAMB B3 / AE513
3" = 1'-0"

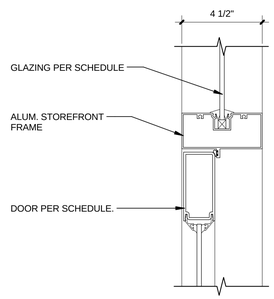

MULLION B4 / AE513
3" = 1'-0"

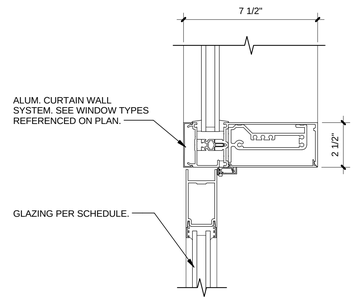

MULLION B5 / AE513
3" = 1'-0"

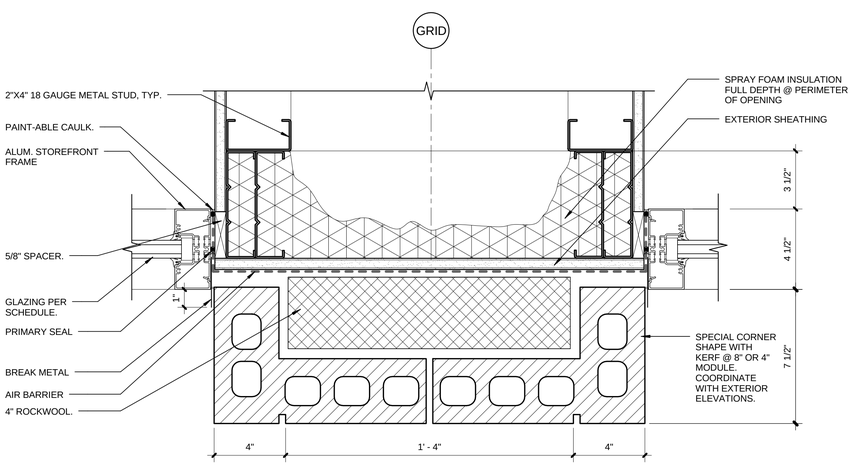

WALL DETAIL A2 / AE513
3" = 1'-0"

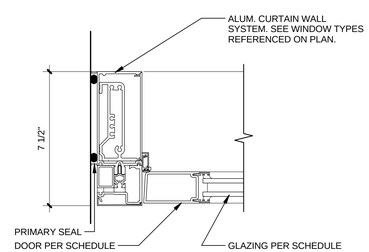

JAMB A3 / AE513
3" = 1'-0"

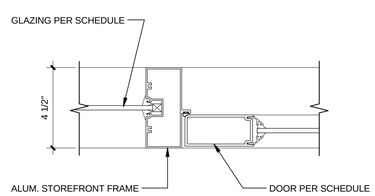

MULLION A4 / AE513
3" = 1'-0"

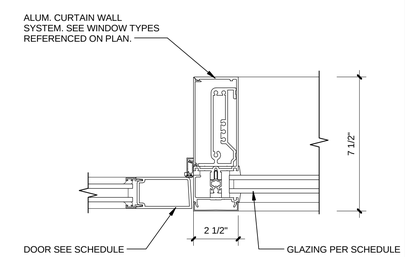

MULLION A5 / AE513
3" = 1'-0"

CRSA
649 E. South Temple
Salt Lake City, UT 84102
801.355.5915

MWL
11798 N. Lakeridge Pkwy.
Ashland, VA 23005
804-228-7473

State of Utah
Department of Administrative Services
Division of Facilities Construction & Management
4110 State Office Building
Salt Lake City, Utah 84114
Phone: (801) 538 - 3018
Fax: (801) 538 - 3267

DIVISION OF FACILITIES CONSTRUCTION AND MANAGEMENT
REVIEWED FOR CODE COMPLIANCE
SIGNATURE: Ernie Calle
DATE: 08-05-2014

STATE OF UTAH #134096 MEHRDAD SAMIE LICENSED ARCHITECT
04-28-2014
ARCHITECT-ENGINEER STAMP

Unified State Laboratory Module 2

4451 South 2700 West, Taylorsville, UT 84118

DFCM #: 13020300

Project #: B13-024

DATE:	ISSUE TYPE:
APRIL 21, 2014	BID SET
CHECKED BY	J. NIELSEN
DRAWN BY	F. PITORE

DETAILS

AE513

VOLUME 1

C:\Users\fernando\Documents_A_13024_Modl_2013_fernando.rvt
7/14/2014 12:39:29 PM

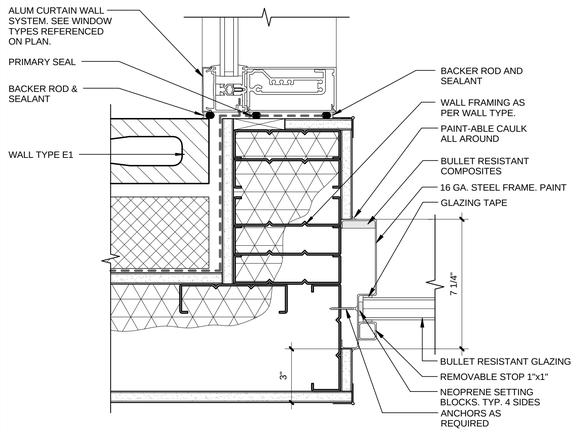

JAMB DETAIL (C2 / AE514)
3" = 1'-0"

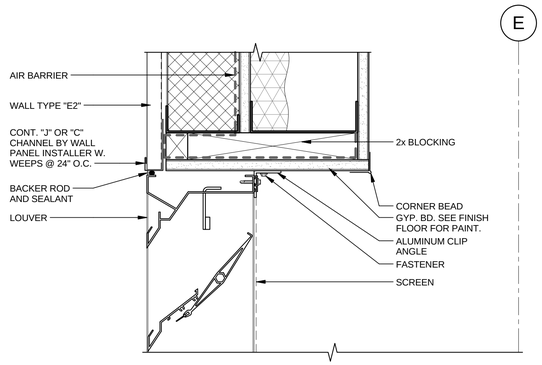

HEAD (C3 / AE514)
3" = 1'-0"

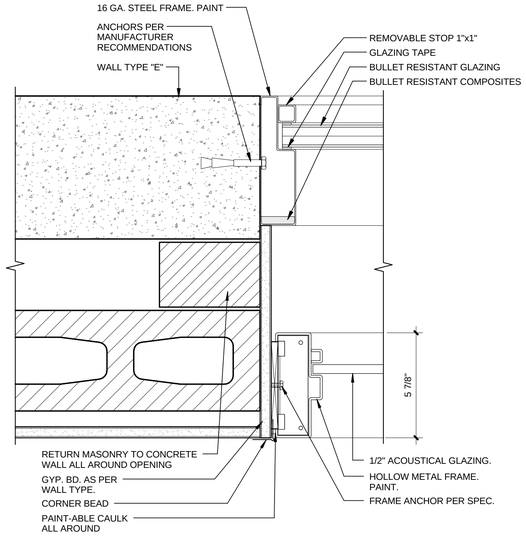

HEAD/JAMB (C4 / AE514)
3" = 1'-0"

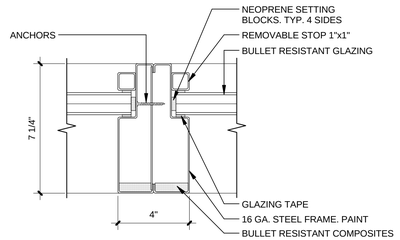

MULLION (D5 / AE514)
3" = 1'-0"

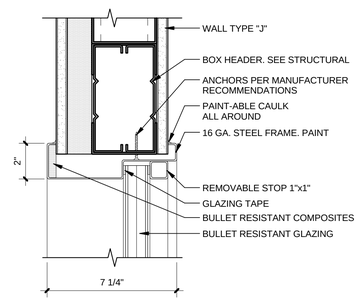

HEAD (C5 / AE514)
3" = 1'-0"

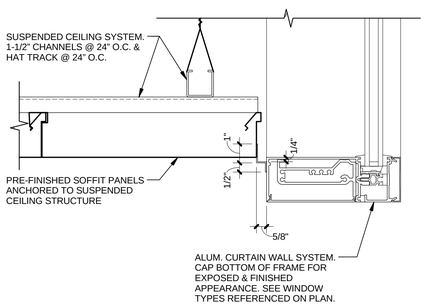

SOFFIT DETAIL (B2 / AE514)
3" = 1'-0"

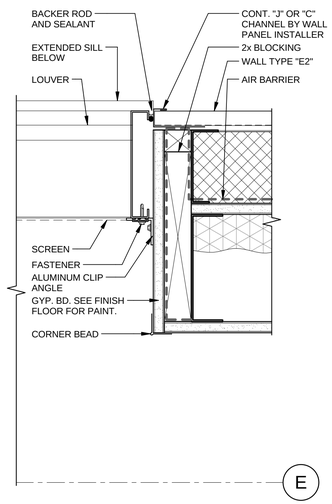

JAMB (B3 / AE514)
3" = 1'-0"

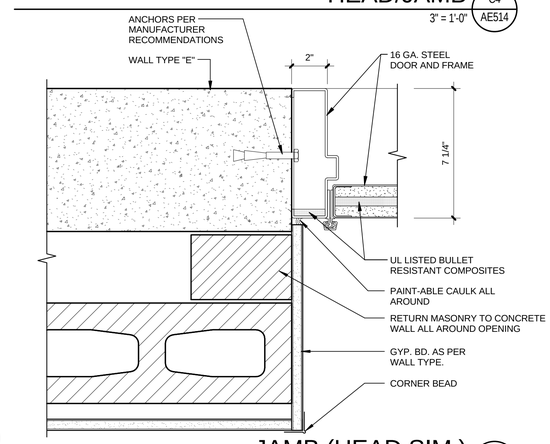

JAMB (HEAD SIM.) (1 / AE514)
3" = 1'-0"

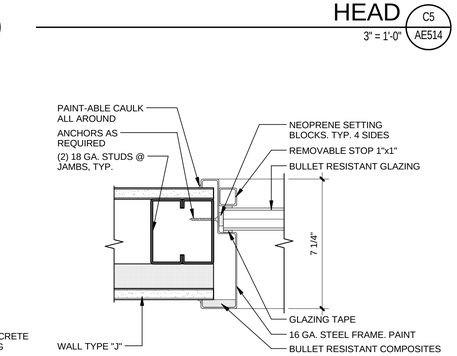

JAMB (B5 / AE514)
3" = 1'-0"

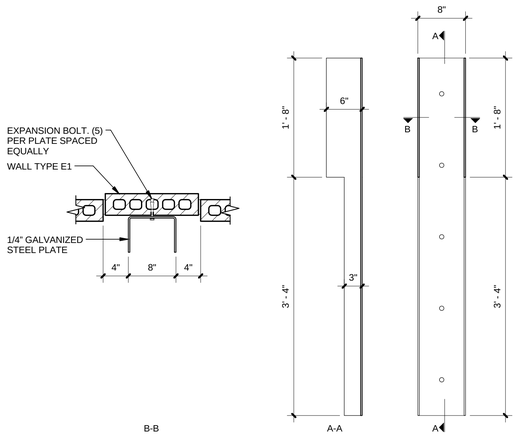

WALL DETAIL (A2 / AE514)
1" = 1'-0"

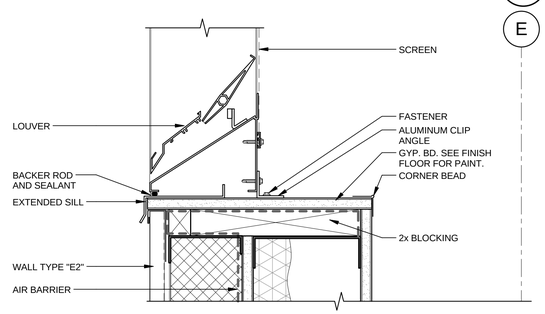

SILL (A3 / AE514)
3" = 1'-0"

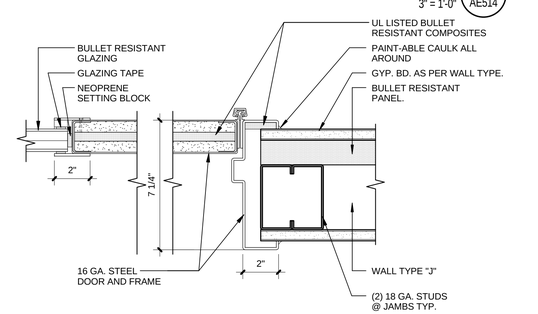

JAMB (A4 / AE514)
3" = 1'-0"

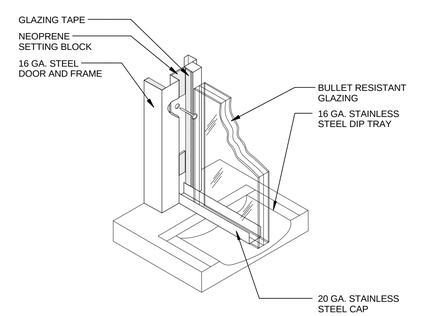

SILL (A5 / AE514)
6" = 1'-0"

CRSA
649 E. South Temple
Salt Lake City, UT 84102
801.355.5915

MWL
11798 N. Lakeridge Pkwy.
Ashland, VA 23005
804-228-7473

State of Utah
Department of Administrative Services
Division of Facilities Construction & Management
4110 State Office Building
Salt Lake City, Utah 84114
Phone: (801) 538 - 3018
Fax: (801) 538 - 3267

DIVISION OF FACILITIES CONSTRUCTION AND MANAGEMENT
REVIEWED FOR CODE COMPLIANCE
SIGNATURE: Eric Calk
DATE: 08-05-2014

STATE OF UTAH #134096 MEHRDAD SAMIE LICENSED ARCHITECT
04-28-2014
ARCHITECT-ENGINEER STAMP

Unified State Laboratory Module 2

4451 South 2700 West, Taylorsville, UT 84118

DFCM #: 13020300
Project #: B13-024

DATE:	ISSUE TYPE:
APRIL 21, 2014	BID SET
CHECKED BY	J. NIELSEN
DRAWN BY	F. PITORE

DETAILS

AE514

VOLUME 1

C:\Users\fernando\Documents_A_13024_Modli_2013_fernando.rvt
7/14/2014 12:39:38 PM

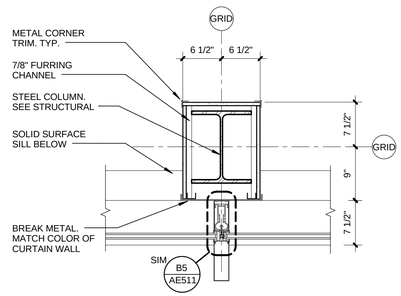

COLUMN WRAP TYPE A (C3 / AE520)
1" = 1'-0"

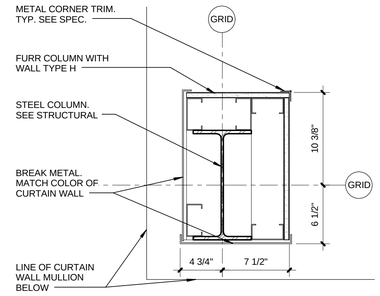

COLUMN WRAP DETAIL (C4 / AE520)
1 1/2" = 1'-0"

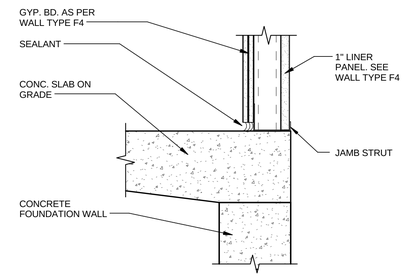

SHAFT DETAIL (C5 / AE520)
1 1/2" = 1'-0"

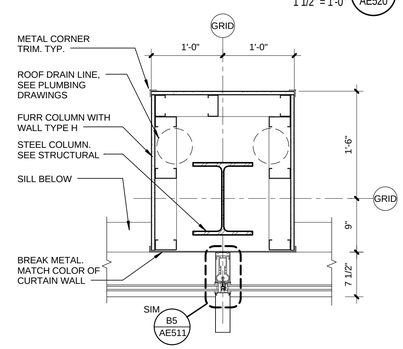

COLUMN WRAP TYPE B (B4 / AE520)
1" = 1'-0"

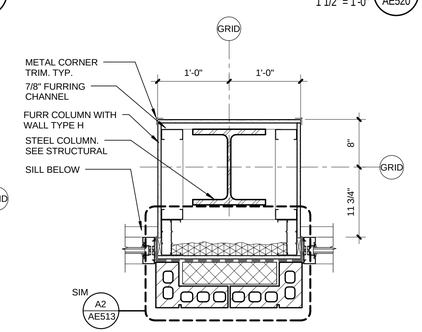

COLUMN WRAP TYPE C (B5 / AE520)
1" = 1'-0"

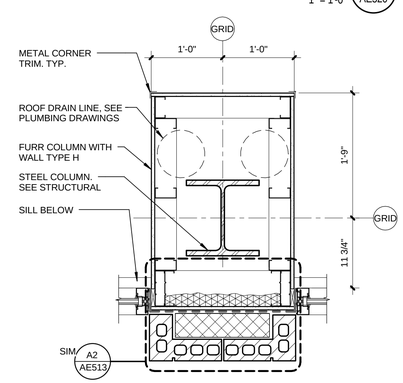

COLUMN WRAP TYPE D (A4 / AE520)
1" = 1'-0"

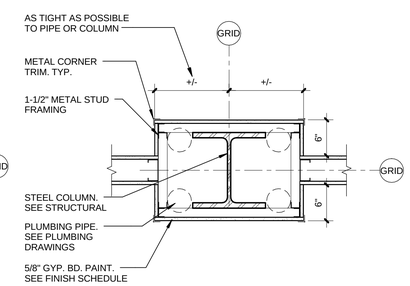

COLUMN WRAP TYPE E (A5 / AE520)
1" = 1'-0"

CRSA
649 E. South Temple
Salt Lake City, UT 84102
801.355.5915

MWL
11798 N. Lakeridge Pkwy.
Ashland, VA 23005
804-228-7473

State of Utah
Department of Administrative Services
Division of Facilities Construction & Management
DFCM
4110 State Office Building
Salt Lake City, Utah 84114
Phone: (801) 538 - 3018
Fax: (801) 538 - 3267

DIVISION OF FACILITIES CONSTRUCTION AND MANAGEMENT
REVIEWED FOR CODE COMPLIANCE
SIGNATURE: Ernie Calle
DATE: 08-05-2014

STATE OF UTAH
#134096
MEHRDAD SAMIE
LICENSED ARCHITECT
04.28.2014
ARCHITECT-ENGINEER STAMP

Unified State Laboratory Module 2

4451 South 2700 West, Taylorsville, UT 84118

DFCM #: 13020300
Project #: B13-024

DATE:	ISSUE TYPE:
APRIL 21, 2014	BID SET
CHECKED BY	J. NIELSEN
DRAWN BY	F. PITORE

DETAILS

AE520

VOLUME 1

C:\Users\fernando\Documents_A_13024_Modli_2013_fernando.rvt
7/14/2014 12:39:46 PM

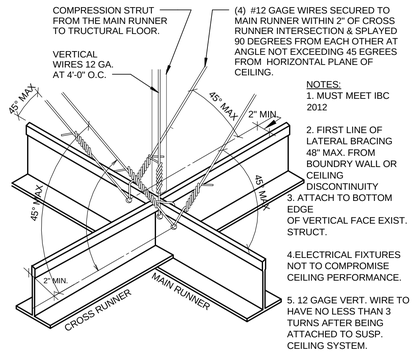

NOTES:
1. MUST MEET IBC 2012
2. FIRST LINE OF LATERAL BRACING 48" MAX. FROM BOUNDRY WALL OR CEILING DISCONTINUITY
3. ATTACH TO BOTTOM EDGE OF VERTICAL FACE EXIST. STRUCT.
4.ELECTRICAL FIXTURES NOT TO COMPROMISE CEILING PERFORMANCE.
5. 12 GAGE VERT. WIRE TO HAVE NO LESS THAN 3 TURNS AFTER BEING ATTACHED TO SUSP. CEILING SYSTEM.

NOTE: SEE ALSO DETAIL A5/AE530

SEISMIC BRACING
1 1/2" = 1'-0" D3 AE530

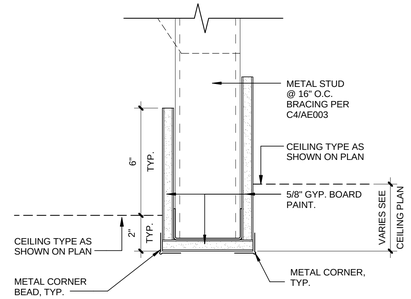

HEADER DETAIL
3" = 1'-0" D4 AE530

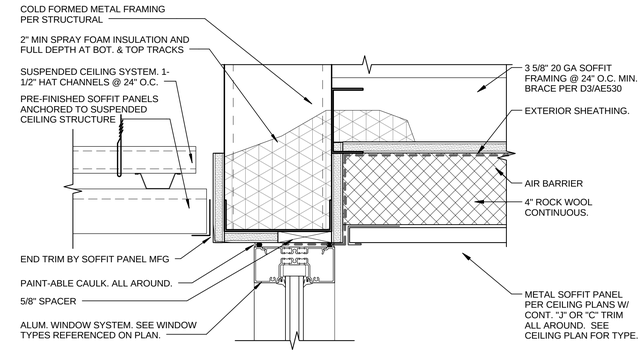

HEADER DETAIL
3" = 1'-0" D5 AE530

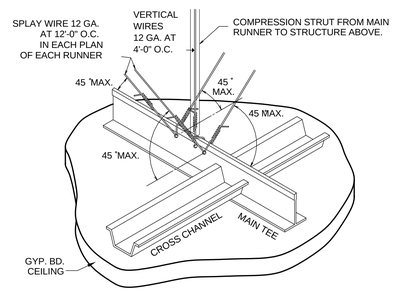

SUSPENDED GYP CEILING
1 1/2" = 1'-0" C4 AE530

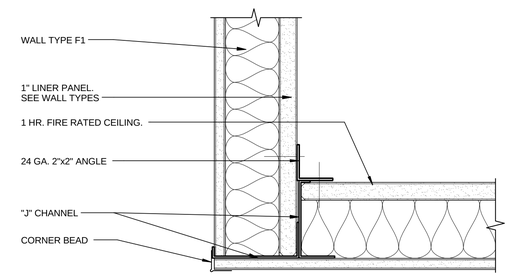

BOTTOM OF SHAFT
3" = 1'-0" C5 AE530

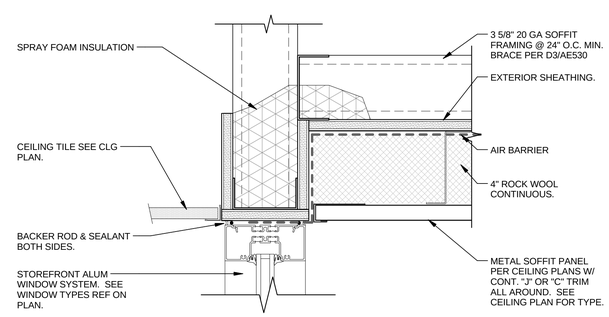

CEILING DETAIL
3" = 1'-0" A3 AE530

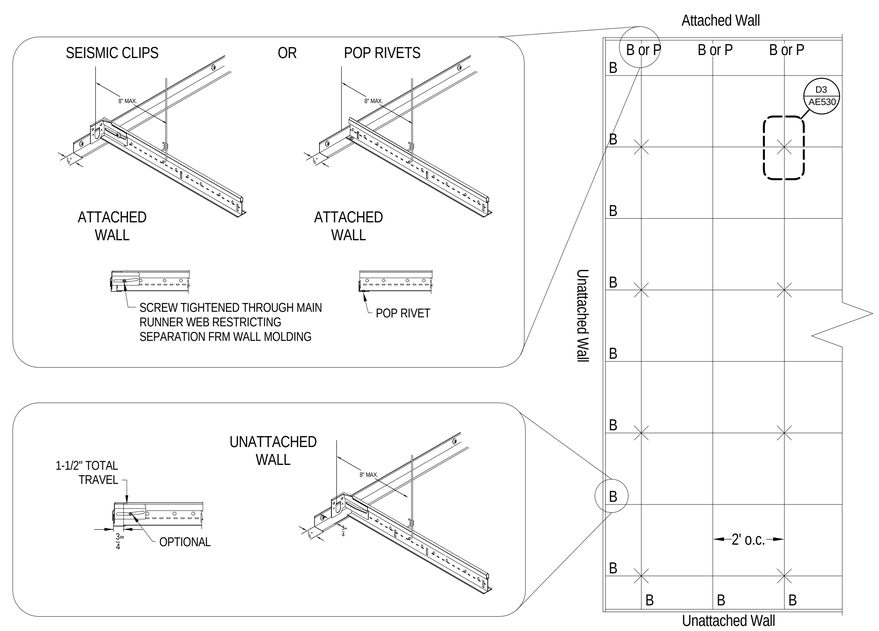

LAY-IN CEILING SEISMIC BRACING
1/2" = 1'-0" A5 AE530

CRSA
649 E. South Temple
Salt Lake City, UT 84102
801.355.5915

MWL
11798 N. Lakeridge Pkwy.
Ashland, VA 23005
804-228-7473

State of Utah
Department of Administrative Services
Division of Facilities Construction & Management
4110 State Office Building
Salt Lake City, Utah 84114
Phone: (801) 538 - 3018
Fax: (801) 538 - 3267

DIVISION OF FACILITIES CONSTRUCTION AND MANAGEMENT
REVIEWED FOR CODE COMPLIANCE
SIGNATURE: Eric Galt
DATE: 08-05-2014

STATE OF UTAH #134096 MEHRDAD SAMIE LICENSED ARCHITECT
04-28-2014
ARCHITECT-ENGINEER STAMP

Unified State Laboratory Module 2

4451 South 2700 West, Taylorsville, UT 84118

DFCM #: 13020300
Project #: B13-024

DATE:	ISSUE TYPE:
APRIL 21, 2014	BID SET
CHECKED BY	J. NIELSEN
DRAWN BY	F. PITORE

DETAILS

AE530
VOLUME 1

C:\Users\fernando\Documents_A_13024_Modll_2013_fernando.rvt
7/14/2014 12:39:54 PM

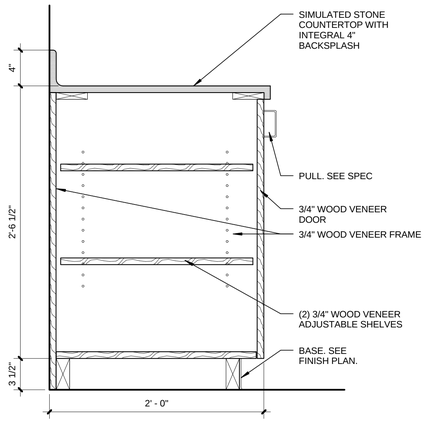

BASE CABINET D1 / AE540
1 1/2" = 1'-0"

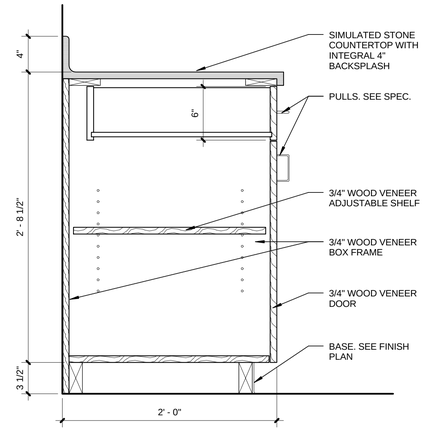

BASE CABINET D3 / AE540
1 1/2" = 1'-0"

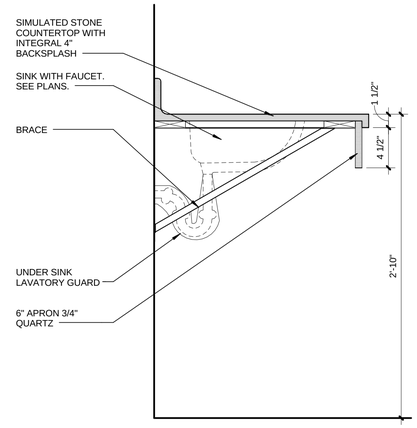

VANITY SECTION D4 / AE540
1 1/2" = 1'-0"

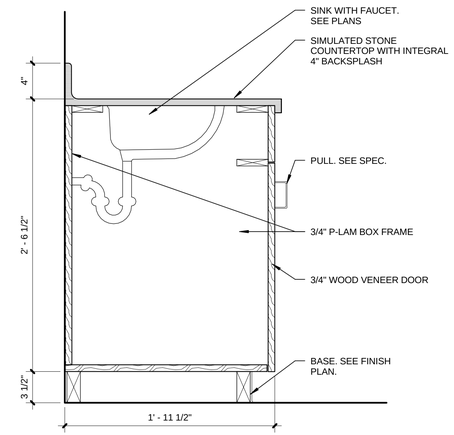

BASE CABINET W/ SINK D5 / AE540
1 1/2" = 1'-0"

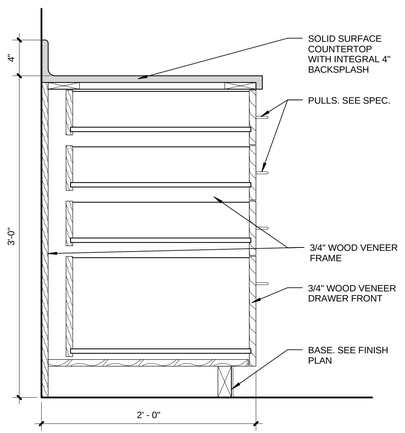

BASE CABINET B1 / AE540
1 1/2" = 1'-0"

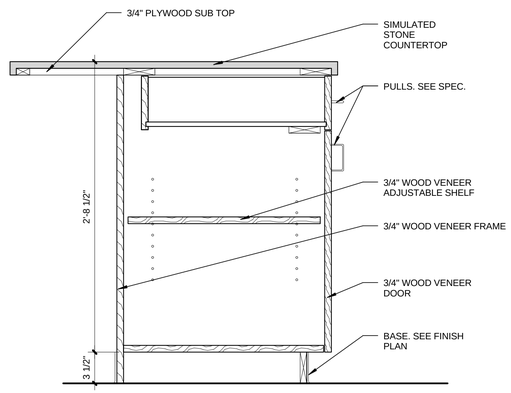

BASE CABINET B3 / AE540
1 1/2" = 1'-0"

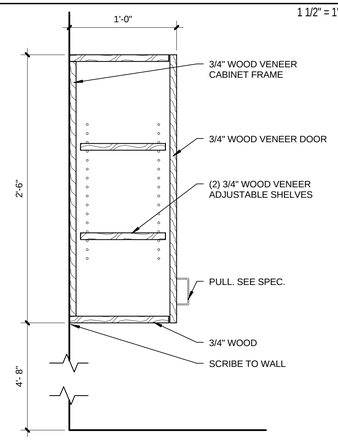

UPPER CABINET B4 / AE540
1 1/2" = 1'-0"

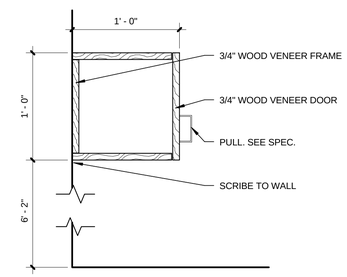

SHORT UPPER CABINET B5 / AE540
1 1/2" = 1'-0"

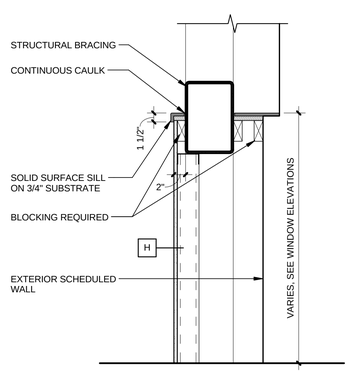

SILL DETAIL A2 / AE540
1" = 1'-0"

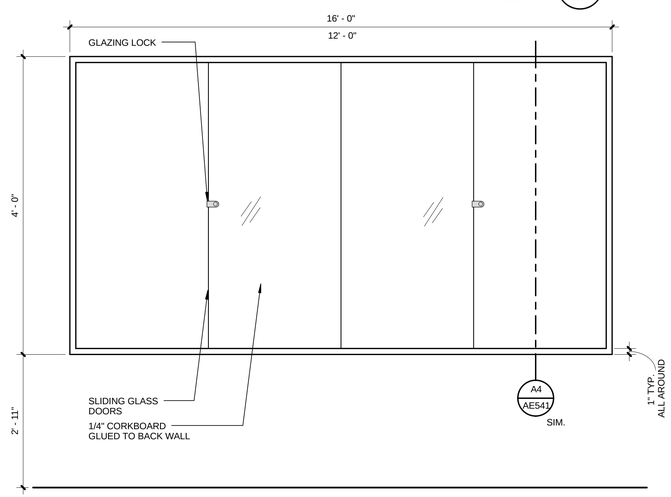

DISPLAY CABINET ELEVATION A3 / AE540
1" = 1'-0"

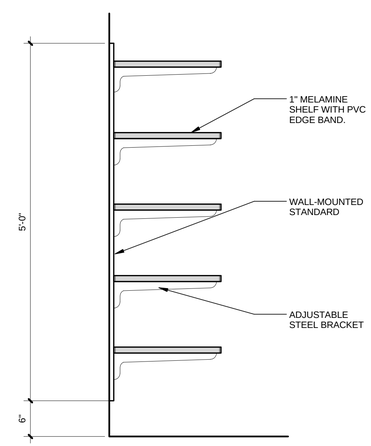

ADJUSTABLE SHELVES A4 / AE540
1" = 1'-0"

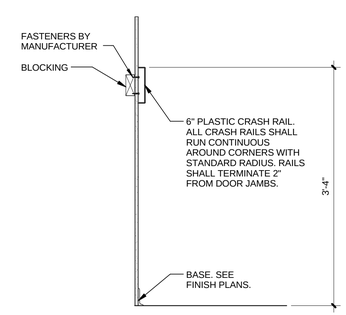

BUMPER GUARD A5 / AE540
1" = 1'-0"

CRSA
649 E. South Temple
Salt Lake City, UT 84102
801.355.5915

MWL
11798 N. Lakeridge Pkwy.
Ashland, VA 23005
804-228-7473

State of Utah
Department of Administrative Services
Division of Facilities Construction & Management
4110 State Office Building
Salt Lake City, Utah 84114
Phone: (801) 538 - 3018
Fax: (801) 538 - 3267

DIVISION OF FACILITIES CONSTRUCTION AND MANAGEMENT
REVIEWED FOR CODE COMPLIANCE
SIGNATURE: Ernie Calle
DATE: 08-05-2014

STATE OF UTAH #134096 MEHRDAD SAMIE LICENSED ARCHITECT
04-28-2014
ARCHITECT-ENGINEER STAMP

Unified State Laboratory Module 2

4451 South 2700 West, Taylorsville, UT 84118

DFCM #: 13020300
Project #: B13-024

DATE:	ISSUE TYPE:
APRIL 21, 2014	BID SET
CHECKED BY	J. NIELSEN
DRAWN BY	F. PITORE

DETAILS

AE540
VOLUME 1

C:\Users\fernando\Documents_A_13024_Modil_2013_fernando.rvt
7/14/2014 12:40:01 PM

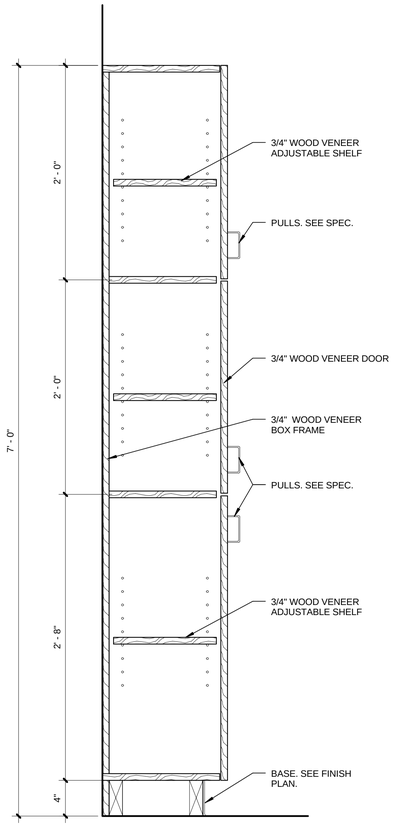

FILE CABINETS C1 / AE541
1 1/2" = 1'-0"

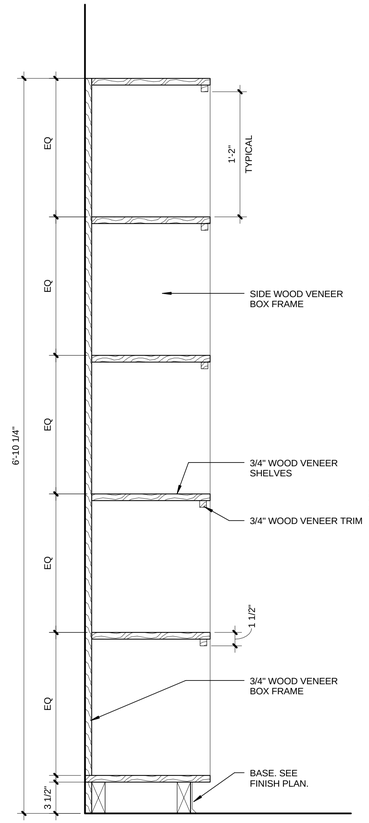

BOOKCASE C2 / AE541
1 1/2" = 1'-0"

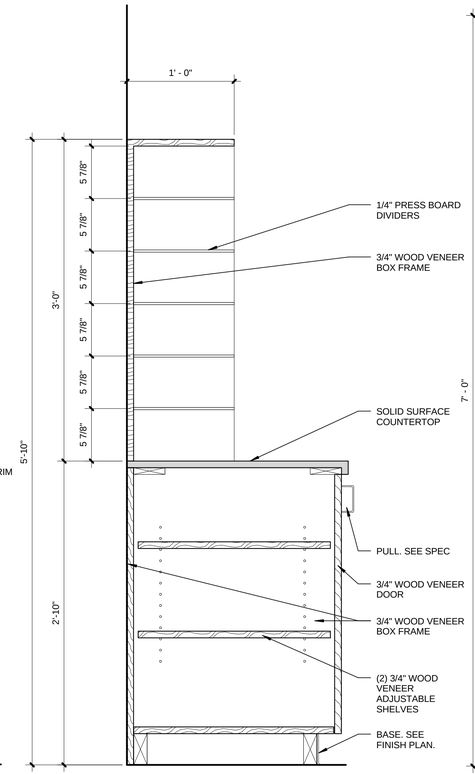

CUBBIES C3 / AE541
1 1/2" = 1'-0"

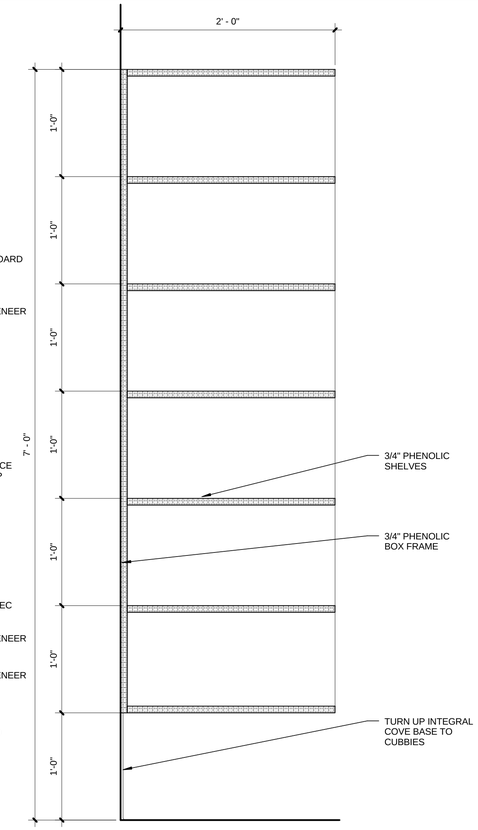

CUBBIES C4 / AE541
1 1/2" = 1'-0"

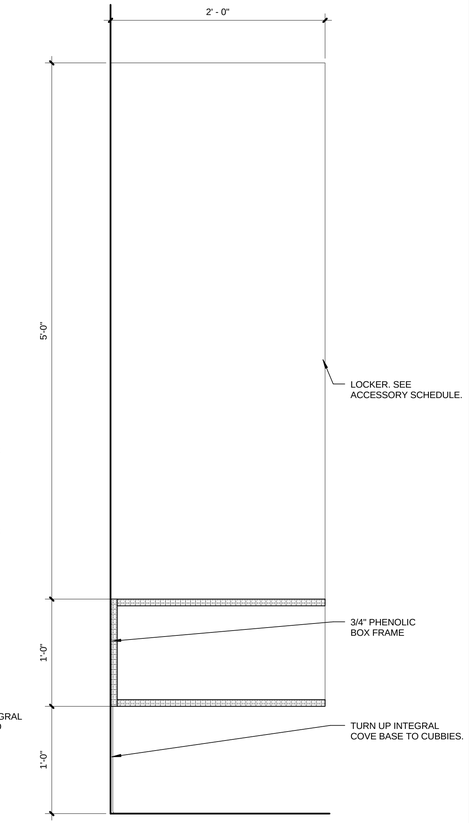

CUBBIES C5 / AE541
1 1/2" = 1'-0"

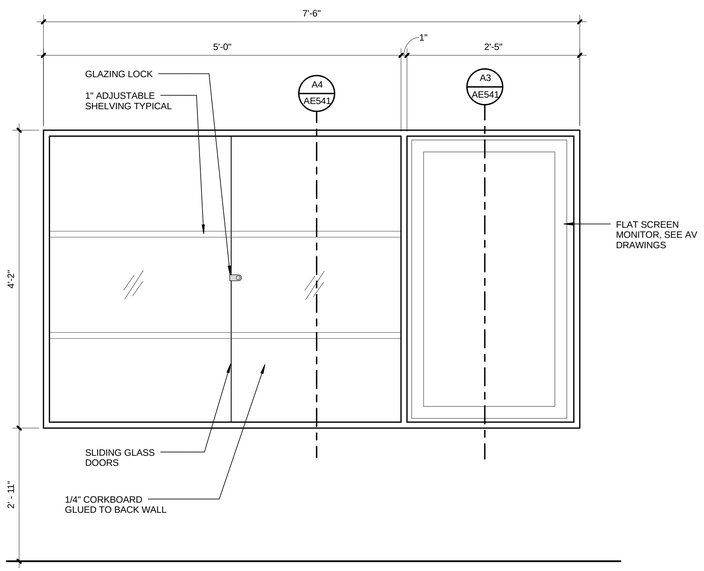

DISPLAY CABINET ELEVATION A2 / AE541
1" = 1'-0"

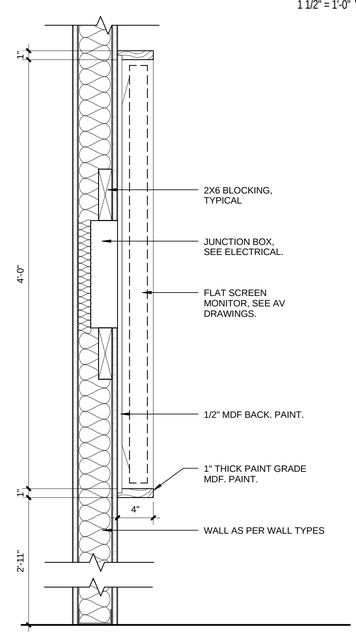

DISPLAY CABINET DETAIL A3 / AE541
1 1/2" = 1'-0"

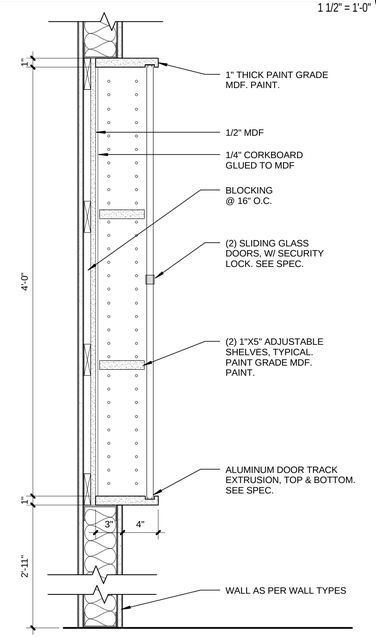

DISPLAY CABINET DETAIL A4 / AE541
1 1/2" = 1'-0"

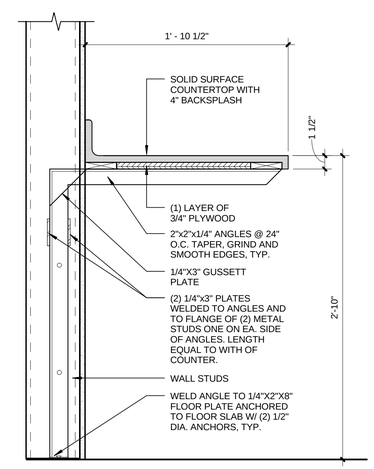

COUNTER SECTION A5 / AE541
1 1/2" = 1'-0"

CRSA
649 E. South Temple
Salt Lake City, UT 84102
801.355.5915

MWL
11798 N. Lakeridge Pkwy.
Ashland, VA 23005
804-228-7473

State of Utah
Department of Administrative Services
Division of Facilities Construction & Management
4110 State Office Building
Salt Lake City, Utah 84114
Phone: (801) 538 - 3018
Fax: (801) 538 - 3267

DIVISION OF FACILITIES CONSTRUCTION AND MANAGEMENT
REVIEWED FOR CODE COMPLIANCE
SIGNATURE: Ernie Calle
DATE: 08-05-2014

STATE OF UTAH #134096 MEHRDAD SAMIE LICENSED ARCHITECT
04.28.2014
ARCHITECT-ENGINEER STAMP

Unified State Laboratory Module 2

4451 South 2700 West, Taylorsville, UT 84118

DFCM #: 13020300
Project #: B13-024

DATE:	ISSUE TYPE:
APRIL 21, 2014	BID SET
CHECKED BY	J. NIELSEN
DRAWN BY	F. PITORE

DETAILS

AE541
VOLUME 1

C:\Users\fernando\Documents_A_13024_Modll_2013_fernando.rvt
7/14/2014 12:40:09 PM

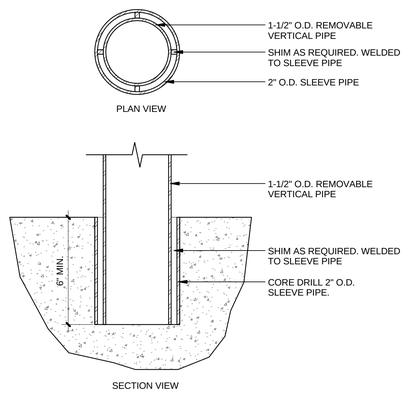

CHAIR RAIL DETAIL (C2 / AE550)

3" = 1'-0"

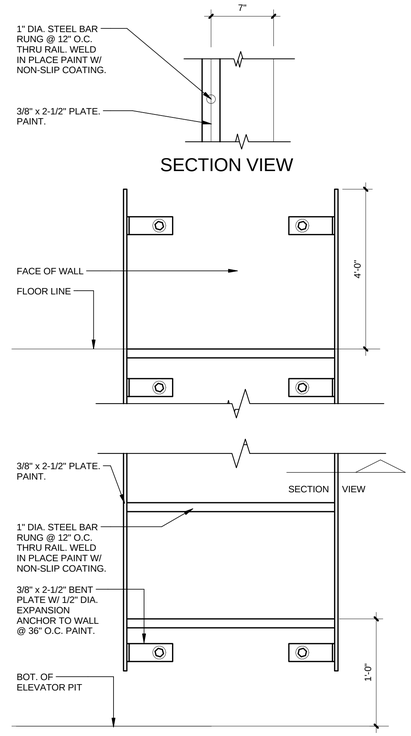

ACCESS LADDER DETAIL (C3 / AE550)

1 1/2" = 1'-0"

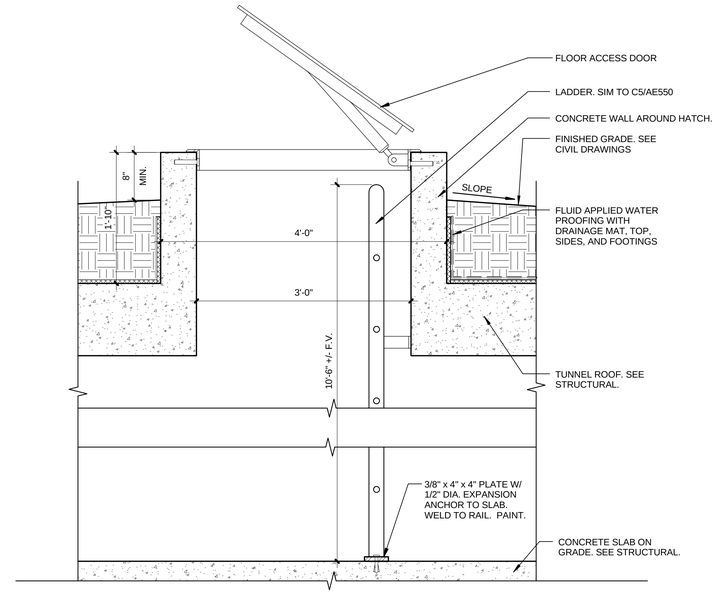

ESCAPE HATCH DETAIL (C5 / AE550)

1" = 1'-0"

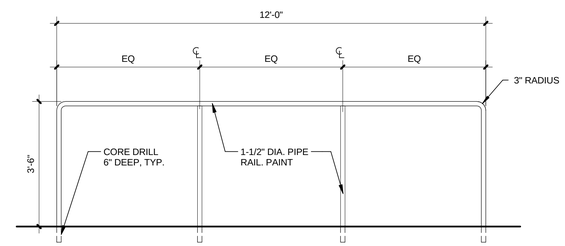

CANE DETECTION DETAIL (B5 / AE550)

1/2" = 1'-0"

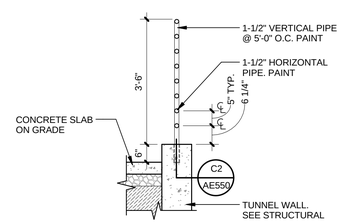

GUARDRAIL DETAIL (B2 / AE550)

1/2" = 1'-0"

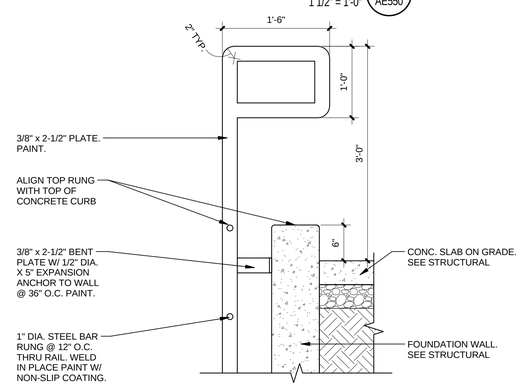

LADDER DETAIL (B4 / AE550)

1" = 1'-0"

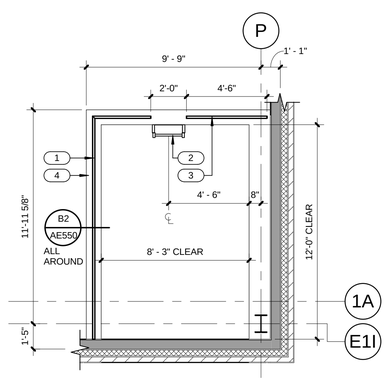

TUNNEL OPENING PLAN (A2 / AE550)

1/4" = 1'-0"

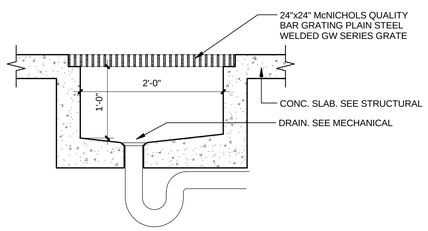

SUMP PIT DETAIL (A4 / AE550)

1" = 1'-0"

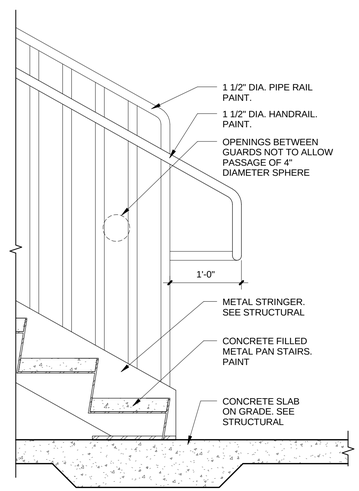

STAIR DETAIL (A5 / AE550)

1" = 1'-0"

CRSA
649 E. South Temple
Salt Lake City, UT 84102
801.355.5915

MWL
11798 N. Lakeridge Pkwy.
Ashland, VA 23005
804-228-7473

State of Utah
Department of Administrative Services
Division of Facilities Construction & Management
4110 State Office Building
Salt Lake City, Utah 84114
Phone: (801) 538 - 3018
Fax: (801) 538 - 3267

DIVISION OF FACILITIES CONSTRUCTION AND MANAGEMENT
REVIEWED FOR CODE COMPLIANCE
SIGNATURE: Ernie Calle
DATE: 08-05-2014

STATE OF UTAH #134096 MEHRDAD SAMIE LICENSED ARCHITECT
04-28-2014
ARCHITECT-ENGINEER STAMP

Unified State Laboratory Module 2

4451 South 2700 West, Taylorsville, UT 84118

DFCM #: 13020300
Project #: B13-024

DATE:	ISSUE TYPE:
APRIL 21, 2014	BID SET
CHECKED BY	J. NIELSEN
DRAWN BY	F. PITORE

DETAILS

AE550

VOLUME 1

C:\Users\fernando\Documents_A_13024_Modi_2013_fernando.rvt
7/14/2014 12:40:19 PM

INTERIOR WALLS OVER WOOD OR METAL STUDS
Wood or Metal Studs W245-12
Coated Glass Mat Water-Resistant
Gypsum Backer Board
Ceramic Tile

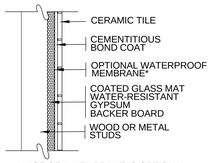

*USE OF A MEMBRANE IS OPTIONAL. SEE MEMBRANE OPTIONS.

W245-12 TILE DETAIL (D1 / AE560)
3" = 1'-0"

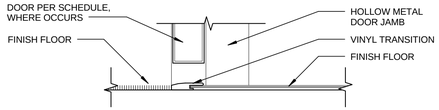

VINYL TRANSITION STRIP (D2 / AE560)
3" = 1'-0"

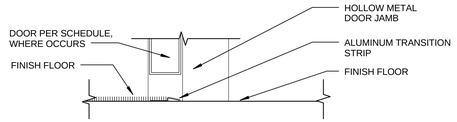

ALUMINUM TRANSITION STRIP (D3 / AE560)
3" = 1'-0"

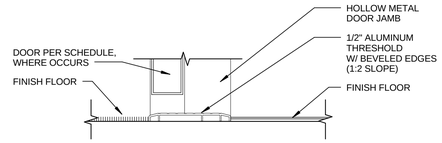

ALUMINUM THRESHOLD (D4 / AE560)
3" = 1'-0"

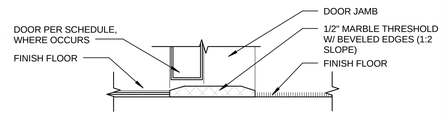

MARBLE TRANSITION (D5 / AE560)
3" = 1'-0"

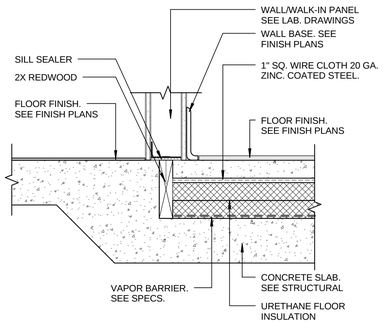

SLAB DETAIL (C2 / AE560)
1 1/2" = 1'-0"

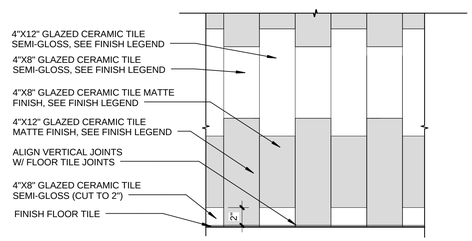

WALL TILE 1 INSTALLATION PATTERN (C3 / AE560)
1 1/2" = 1'-0"

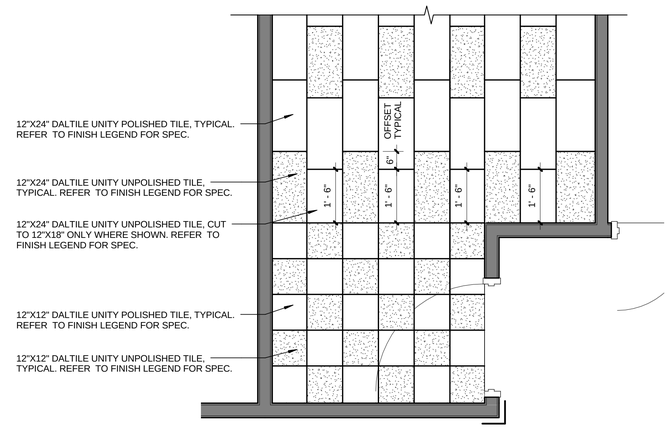

RESTROOMS FINISH FLOOR PATTERN (C5 / AE560)
1/2" = 1'-0"

INTERIOR FLOORS OVER CONCRETE
On-Ground Concrete
F113-12 Ceramic Tile

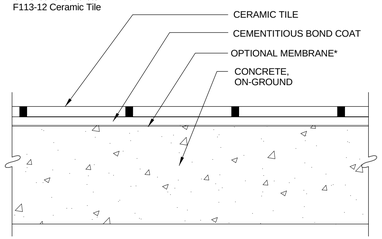

F113-12 TILE DETAIL (B2 / AE560)
3" = 1'-0"

INTERIOR FLOORS OVER CONCRETE
On-Ground or Above-Ground Concrete F111-12
Unbonded Mortar Bed Ceramic Tile

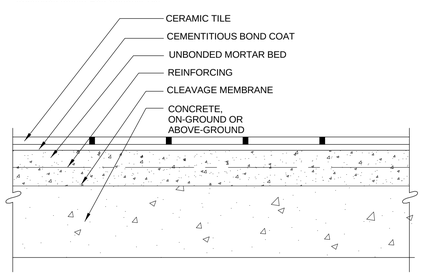

F111-12 TILE DETAIL (A2 / AE560)
3" = 1'-0"

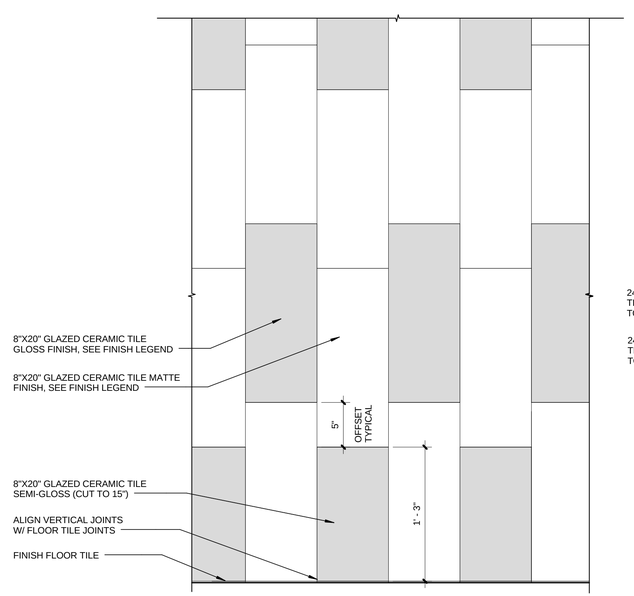

WALL TILE 2 INSTALLATION PATTERN (A3 / AE560)
1 1/2" = 1'-0"

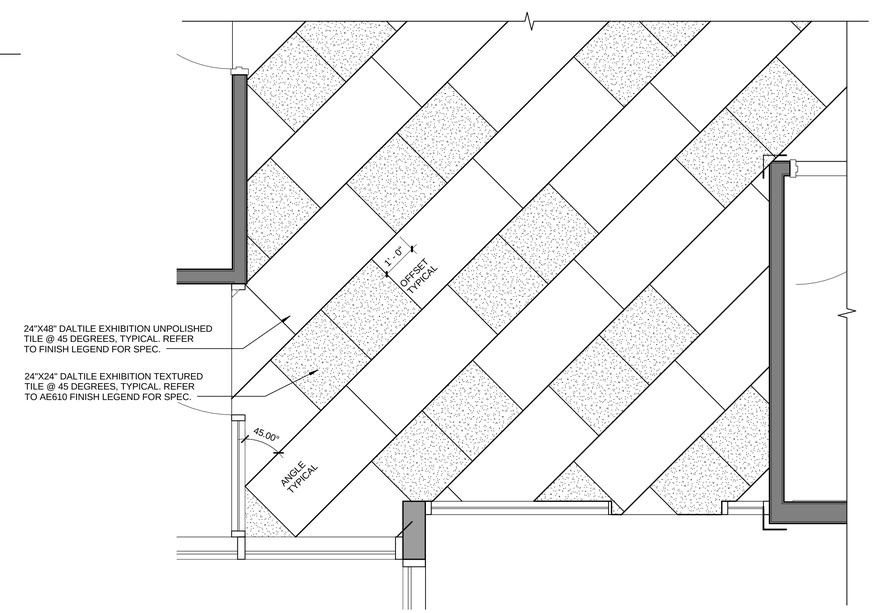

LOBBY FINISH FLOOR PATTERN (A5 / AE560)
1/2" = 1'-0"

CRSA
649 E. South Temple
Salt Lake City, UT 84102
801.355.5915

MWL
11798 N. Lakeridge Pkwy.
Ashland, VA 23005
804-228-7473

State of Utah
Department of Administrative Services
Division of Facilities Construction & Management
4110 State Office Building
Salt Lake City, Utah 84114
Phone: (801) 538 - 3018
Fax: (801) 538 - 3267

DIVISION OF FACILITIES CONSTRUCTION AND MANAGEMENT
REVIEWED FOR CODE COMPLIANCE
SIGNATURE: Ernie Calle
DATE: 08-05-2014

STATE OF UTAH #134096 MEHRDAD SAMIE LICENSED ARCHITECT
04-28-2014
ARCHITECT-ENGINEER STAMP

Unified State Laboratory Module 2

4451 South 2700 West, Taylorsville, UT 84118

DFCM #: 13020300
Project #: B13-024

DATE:	ISSUE TYPE:
APRIL 21, 2014	BID SET
CHECKED BY	J. NIELSEN
DRAWN BY	F. PITORE

FINISH DETAILS

AE560
VOLUME 1

C:\Users\fernando\Documents_A_13024_Modli_2013_fernando.rvt
7/14/2014 12:40:34 PM

DOOR SCHEDULE

DOOR #	SIZE	FIRE RATING	FRAME TYPE FRAME	DOOR TYPE PANEL	COMMENTS
100N	3'-0"x8'-0"		F-AL	P-AL1	
100TE	3'-0"x7'-0"		F-HM3	P-HM1	
100	3'-6"x8'-0"		F-AL	P-AL1	
100A	3'-6"x8'-0"		F-AL	P-AL1	
100AA	(2) 3'-0"x7'-0"		F-HM1	P-W1	
100B	3'-0"x7'-0"	60 MIN.	F-HM	P-W	
100BB	8'-0"x10'-0"			P-R.	
100CC	3'-0"x7'-0"		F-HM	P-W	
100D	3'-6"x7'-0		F-HM	P-W	
100DD	8'-0"x10'-0"			P-R.	
100E	3'-0"x7'-0"		F-HM	P-W	
100F	3'-0"x7'-0"		F-HM	P-W	
100G	3'-0"x7'-0"		F-HM	P-W	
100H	3'-0"x7'-0"		F-AL	P-AL1	
100HA	3'-0"x7'-0"		F-AL	P-AL1	
100J	3'-0"x7'-0"	60 MIN.	F-HM	P-W	
100JA	3'-0"x7'-0"		F-HM3	P-HM1	
100K	(2) 3'-0"x7'-0"		F-HM1	P-W4	
100L	3'-6"x8'-0"	60 MIN.	F-HM	P-W	
100LA	3'-6"x8'-0"	60 MIN.	F-HM	P-W	
100M	3'-6"x8'-0"	60 MIN.	F-HM	P-W	
100NA	3'-0" x 7'-0"		F-HM	P-W3	
100P	3'-0"x7'-0"	120 MIN.	F-HM5	P-W	
100PA	3'-0"x7'-0"		F-HM3	P-HM1	
100Q	(2) 4'-0"x7'-0"	90 MIN.	F-HM1	P-HM2	
100R	3'-6"x7'-0"		F-HM	P-W2	
100S	5'-0"x7'-0"		F-AL1	P-AL2	ICU DOOR
100T	3'-0"x7'-0"		F-HM3	P-HM1	
100TA	8'-0"x10'-0"	60 MIN.		P-R1	1 HR. FIRE RATED OVERHEAD COILING DOOR
100TC	3'-0"x7'-0"	60 MIN.	F-HM	P-W	
100TD	3'-0"x7'-0"		F-HM3	P-HM1	
100X	2'-0" x 7'-0"		F-HM	P-W	
100Y	(2) 3'-0"x7'-0"		F-HM1	P-W1	
100Z	(2) 3'-0"x7'-0"		F-HM1	P-W1	
101	3'-0"x7'-0"		F-HM	P-W2	
102	3'-0"x7'-0"		F-AL	P-AL1	
102A	3'-0"x7'-0"		F-HM	P-W2	
102B	3'-0" x 7'-0"		F-AL	P-W	
102C	3'-0" x 7'-0"		F-AL	P-W	
102D	3'-0" x 7'-0"		F-AL	P-W	
102E	3'-0" x 7'-0"		F-AL	P-W	
102F	3'-0"x7'-0"		F-HM	P-W2	
102FA	3'-0"x7'-0"		F-AL	P-AL1	
102G	3'-0"x7'-0"		F-HM	P-W	
102H	3'-0"x7'-0"		F-HM	P-W2	
102J	3'-0" x 7'-0"		F-HM	P-W3	
103	3'-0"x7'-0"		F-HM	P-W	
104	3'-0" x 7'-0"		F-AL	P-W	
104A	3'-0"x7'-0"		F-AL	P-AL1	
104B	3'-0"x7'-0"		F-HM3	P-W	
105	3'-0"x7'-0"		F-HM	P-W	
106	3'-0"x7'-0"		F-HM	P-W	
107	3'-0"x7'-0"		F-HM	P-W	
108	3'-0"x7'-0"		F-HM	P-W	
109	3'-0"x7'-0"		F-HM	P-W	
110	3'-0"x7'-0"		F-HM	P-W	
111	3'-0"x7'-0"		F-HM	P-W2	
111A	3'-0"x7'-0"		F-HM	P-W	
111C	3'-0"x7'-0"		F-HM	P-W	
112	3'-6"x8'-0"		F-HM	P-HM3	
112A	3'-0"x7'-0"		F-HM3	P-HM1	
112B	16'-0"x12'-0"			P-R.	HIGH SPEED ROLLING DOOR
112C	12'-0"x12'-0"			P-R.	HIGH SPEED ROLLING DOOR
113	3'-6"x8'-0"		F-HM	P-HM3	
113A	3'-0"x7'-0"		F-HM3	P-HM1	
113B	12'-0"x12'-0"			P-R.	HIGH SPEED ROLLING DOOR
114	3'-0"x7'-0"		F-HM	P-W	
114A	(2) 3'-0"x7'-0"		F-HM1	P-HM2	
115	(2) 3'-0"x7'-0"		F-HM1	P-HM2	
115A	3'-0"x7'-0"		F-HM	P-W	
115B	3'-6"x7'-0		F-HM	P-W	
115C	3'-6"x7'-0		F-HM	P-W	
115D	(2) 3'-0"x7'-0"		F-HM4	P-HM4	4" JAMB FRAME
116	3'-0"x7'-0"		F-HM	P-W2	
116A	3'-0"x7'-0"		F-HM	P-W	
117	3'-0"x7'-0"		F-HM	P-W	
117A	3'-0"x7'-0"		F-HM	P-W	
118	3'-6"x7'-0"		F-HM	P-W2	
120	3'-0"x7'-0"		F-HM	P-W2	
120A	3'-0" x 7'-0"		F-AL	P-W	
121	3'-0"x7'-0"		F-HM3	P-HM1	
121A	12'-0"x12'-0"			P-R.	HIGH SPEED ROLLING DOOR
121B	12'-0"x12'-0"			P-R.	HIGH SPEED ROLLING DOOR
121C	6'-0"x8'-0"			P-R.	HIGH SPEED ROLLING DOOR
121D	12'-0"x12'-0"			P-R.	HIGH SPEED ROLLING DOOR
121E	12'-0"x12'-0"			P-R.	HIGH SPEED ROLLING DOOR
121F	3'-0"x7'-0"		F-HM3	P-HM1	
121G	5'-0"x7'-0"		F-AL1	P-AL2	ICU DOOR
122	5'-0"x7'-0"		F-AL1	P-AL2	ICU DOOR
122B	3'-0"x7'-0"		F-HM	P-W	
123	5'-0"x7'-0"		F-AL1	P-AL2	ICU DOOR
124	5'-0"x7'-0"		F-AL1	P-AL2	ICU DOOR
124A	5'-0"x7'-0"		F-AL1	P-AL2	ICU DOOR
124B	5'-0"x7'-0"		F-AL1	P-AL2	ICU DOOR
124C	3'-0"x7'-0"		F-HM	P-W2	
124D	3'-6"x7'-0"		F-HM	P-W2	
124E	3'-0"x7'-0"		F-HM	P-W	
126A	3'-0"x7'-0"		F-HM	P-W2	
126B	3'-0"x7'-0"		F-HM	P-W2	
127	3'-0"x7'-0"		F-HM	P-W	
127A	3'-0"x7'-0"		F-HM	P-W	
127B	2'-2" x 7'-0"		F-H.M.	P-W	
128	3'-0"x7'-0"		F-HM	P-W	
128A	3'-0"x7'-0"		F-HM	P-W	
129	3'-0"x7'-0"		F-HM	P-W	
130	3'-0"x7'-0"		F-HM	P-W2	
130A	3'-0" x 7'-0"		F-AL	P-W	
130B	3'-0" x 7'-0"		F-AL	P-W	
130C	3'-0" x 7'-0"		F-AL	P-W	
130D	3'-0" x 7'-0"		F-AL	P-W	
130E	3'-0" x 7'-0"		F-AL	P-W	
130F	3'-0" x 7'-0"		F-AL	P-W	
130G	3'-0" x 7'-0"		F-AL	P-W	
130H	3'-0" x 7'-0"		F-AL	P-W	
130J	3'-0" x 7'-0"		F-AL	P-W	

DOOR SCHEDULE

DOOR #	SIZE	FIRE RATING	FRAME TYPE FRAME	DOOR TYPE PANEL	COMMENTS
130K	3'-0"x7'-0"		F-HM	P-W2	
130L	3'-0" x 7'-0"		F-AL	P-W	
130M	3'-0" x 7'-0"		F-AL	P-W	
130N	3'-0" x 7'-0"		F-AL	P-W	
130P	3'-0"x7'-0"		F-HM	P-W2	
131	3'-0"x7'-0"		F-HM	P-W2	
131A	3'-0"x7'-0"		F-HM	P-W2	
131B	12'-6"x9'-0"			P-R2	ACCORDIAN DOOR
132	3'-0"x7'-0"		F-HM	P-W2	
133	3'-0"x7'-0"		F-HM	P-W2	
133A	3'-0"x7'-0"		F-HM	P-W2	
134	3'-0"x7'-0"		F-HM	P-W2	
134A	3'-0"x7'-0"		F-HM	P-W2	
135	3'-0"x7'-0"		F-HM	P-W	
136	3'-0"x7'-0"		F-HM	P-W	
137	3'-0"x7'-0"		F-HM	P-W	
138	3'-0"x7'-0"		F-AL	P-AL1	
138A	3'-0"x7'-0"		F-AL	P-M	
139	3'-0"x7'-0"		F-HM	P-W	
200	3'-0" x 7'-0"		F-HM	P-W3	
200A	3'-0"x7'-0"	60 MIN.	F-HM	P-W	
200B	3'-0"x7'-0"		F-HM	P-W	
200C	3'-0"x7'-0"	60 MIN.	F-HM	P-W	
200D	3'-0"x7'-0"		F-HM	P-W	
200E	3'-6"x7'-0"		F-HM	P-W2	
200F	3'-0"x7'-0"		F-HM	P-W2	
200H	3'-0"x7'-0"	120 MIN.	F-HM5	P-W	
200L	3'-0"x7'-0"		F-HM	P-W2	
200M	3'-6"x7'-0"		F-HM	P-W2	
200MA	3'-6"x7'-0"		F-HM	P-W2	
200MB	3'-0"x7'-0"		F-HM	P-W	
200N	3'-6"x7'-0"		F-HM	P-W2	
200P	3'-6"x7'-0"		F-HM	P-W2	
200RA	3'-6"x7'-0"		F-HM	P-W2	
200RB	3'-6"x7'-0"		F-HM	P-W2	
200T	3'-0"x7'-0"		F-HM	P-W	
200U	(2) 4'-0"x7'-0"	90 MIN.	F-HM1	P-HM2	
201A	3'-0" x 7'-0"		F-AL	P-W	
201B	3'-0" x 7'-0"		F-AL	P-W	
201C	3'-0" x 7'-0"		F-AL	P-W	
201D	3'-0" x 7'-0"		F-AL	P-W	
201E	3'-0"x7'-0"		F-HM	P-W2	
201F	3'-0"x7'-0"		F-HM	P-W2	
201G	3'-0"x7'-0"		F-HM	P-W2	
202	3'-0"x7'-0"		F-HM	P-W2	
202A	3'-0" x 7'-0"		F-AL	P-W	
203	3'-0"x7'-0"		F-HM	P-W	
203A	2'-0" x 7'-0"		F-HM	P-W	
204	3'-0"x7'-0"		F-HM	P-W	
205	3'-6"x7'-0"		F-HM	P-W2	
205A	3'-0"x7'-0"		F-HM	P-W2	
205B	3'-6"x7'-0"		F-HM	P-W2	
205C	3'-6"x7'-0"		F-1	P-M	REFER TO SPECIFICATIONS
205D	3'-0"x7'-0"		F-HM	P-W2	
206	3'-6"x7'-0"		F-HM	P-W2	
206A	3'-6"x7'-0"		F-HM	P-W2	
207	3'-0"x7'-0"		F-HM	P-W2	
207A	3'-0" x 7'-0"		F-AL	P-W	
208	3'-0" x 7'-0"		F-AL	P-W	
208A	3'-0"x7'-0"		F-HM	P-W2	
208B	3'-0"x7'-0"		F-HM	P-W2	
208C	3'-0"x7'-0"		F-HM	P-W	
208D	3'-0" x 7'-0"		F-AL	P-W	
208E	3'-0"x7'-0"		F-HM	P-W	
208F	3'-0"x7'-0"		F-HM	P-W2	
209	3'-6"x7'-0"		F-HM	P-W2	
209A	3'-0" x 7'-0"		F-AL	P-W	
209B	3'-0"x7'-0"		F-HM	P-W2	
210	(2) 3'-0"x7'-0"		F-HM1	P-HM2	
210A	(2) 3'-0"x7'-0"		F-HM1	P-HM2	
210B	3'-0"x7'-0"		F-HM	P-W	
211	3'-0"x7'-0"		F-HM	P-W2	
211A	3'-6"x7'-0"		F-HM	P-W2	
211B	3'-6"x7'-0"		F-HM	P-W2	
211C	3'-0"x7'-0"		F-HM	P-W2	
212	3'-6"x7'-0"		F-HM	P-W2	
212A	3'-0"x7'-0"		F-HM	P-W2	
212B	3'-0"x7'-0"		F-HM	P-W2	
212C	3'-0"x7'-0"		F-HM	P-W2	
213	3'-0"x7'-0"		F-HM	P-W2	
213A	3'-0"x7'-0"		F-HM	P-W2	
213B	3'-0"x7'-0"		F-HM	P-W2	
213E	3'-0"x7'-0"		F-HM	P-W2	
214	3'-6"x7'-0"		F-HM	P-W2	
214A	3'-6"x7'-0"		F-HM	P-W2	
215	3'-6"x7'-0"		F-HM	P-W2	
215A	3'-0"x7'-0"		F-HM	P-W2	
215B	3'-0"x7'-0"		F-HM	P-W2	
216	3'-0"x7'-0"		F-HM	P-W2	
300	(2) 3'-0"x7'-0"		F-HM1	P-W4	
300A	3'-0"x7'-0"	60 MIN.	F-HM	P-W	
300B	3'-0"x8'-0"		F-AL	P-AL1	
300C	3'-0"x7'-0"		F-HM	P-W	
300D	3'-0"x7'-0"		F-HM	P-W	
300E	3'-0"x7'-0"		F-HM	P-W	
300F	3'-0"x7'-0"		F-HM	P-W	
300G	3'-0" x 7'-0"		F-HM	P-W3	
300H	3'-0"x7'-0"	120 MIN.	F-HM5	P-W	
300L	3'-0"x7'-0"		F-HM	P-W	
300M	(2) 3'-0"x7'-0"		F-HM1	P-W1	
300N	(2) 3'-0"x7'-0"		F-HM1	P-W1	
300Q	3'-0"x7'-0"		F-HM	P-W	
300R	(2) 4'-0"x7'-0"	90 MIN.	F-HM1	P-HM2	
301	3'-0"x7'-0"		F-HM	P-W2	
301A	3'-6"x7'-0"		F-HM	P-W3	
301B	3'-6"x7'-0"		F-HM	P-W3	
301C	3'-6"x7'-0"		F-HM	P-W3	
302	3'-6"x7'-0"		F-HM	P-W3	
302A	3'-6"x7'-0"		F-HM	P-W3	
303	3'-0"x7'-0"		F-HM	P-W2	
303A	3'-0"x7'-0"		F-HM	P-W2	
304	3'-0"x7'-0"		F-HM	P-W2	
307	3'-0"x7'-0"		F-HM	P-W	
307A	2'-0" x 7'-0"		F-HM	P-W	
308	3'-0"x7'-0"		F-HM	P-W	
309	3'-0"x7'-0"		F-HM	P-W2	

DOOR SCHEDULE

DOOR #	SIZE	FIRE RATING	FRAME TYPE FRAME	DOOR TYPE PANEL	COMMENTS
309A	3'-0" x 7'-0"		F-AL	P-W	
309B	3'-0"x7'-0"		F-HM	P-W	
310	3'-0"x7'-0"		F-HM	P-W2	
310A	3'-0"x7'-0"		F-HM	P-W2	
310C	3'-0" x 7'-0"		F-AL	P-W	
310D	3'-0" x 7'-0"		F-AL	P-W	
311	3'-6"x7'-0"		F-HM	P-W3	
311A	3'-0"x7'-0"		F-HM	P-W2	
311C	3'-6"x7'-0"		F-HM	P-W3	
311D	3'-0"x7'-0"		F-HM	P-W2	
312	3'-6"x7'-0"		F-HM	P-W3	
312A	3'-6"x7'-0"		F-HM	P-W3	
313	3'-6"x7'-0"		F-HM	P-W3	
313A	3'-6"x7'-0"		F-HM	P-W3	
314	3'-6"x7'-0"		F-HM	P-W3	
314A	3'-6"x7'-0"		F-HM	P-W3	
315	3'-6"x7'-0"		F-HM	P-W3	
315A	3'-0"x7'-0"		F-HM	P-W2	
315C	3'-0"x7'-0"		F-HM	P-W2	
315D	3'-0"x7'-0"		F-HM	P-W2	
316	3'-0"x7'-0"		F-HM	P-W2	
317	3'-0" x 7'-0"		F-AL	P-W	
319	3'-0" x 7'-0"		F-AL	P-W	
201CC	3'-6"x7'-0		F-HM	P-W	
400B	3'-0"x7'-0"	120 MIN.	F-HM5	P-W	
401	3'-0"x7'-0" 2		F-HM1	P-W	
402	3'-6"x8'-0"		F-HM	P-W	

CRSA

649 E. South Temple
Salt Lake City, UT 84102
801.355.5915

MWL

11798 N. Lakeridge Pkwy.
Ashland, VA 23005
804-228-7473

State of Utah
Department of Administrative Services

DFCM
Division of Facilities Construction & Management
4110 State Office Building
Salt Lake City, Utah 84114
Phone: (801) 538 - 3018
Fax: (801) 538 - 3267

DIVISION OF FACILITIES CONSTRUCTION AND MANAGEMENT
REVIEWED FOR CODE COMPLIANCE
SIGNATURE: Ernie Gallegos
DATE: 08-05-2014

STATE OF UTAH #134096 MEHRDAD SAMIE LICENSED ARCHITECT
04-28-2014
ARCHITECT-ENGINEER STAMP

Unified State Laboratory Module 2

4451 South 2700 West,
Taylorsville, UT 84118

DFCM #: 13020300

Project #: B13-024

DATE:	ISSUE TYPE:
APRIL 21, 2014	BID SET
CHECKED BY	J. NIELSEN
DRAWN BY	F. PITORE

DOOR SCHEDULE

AE601

VOLUME 1

C:\Users\fernando\Documents_A_13024_Modil_2013_fernando.rvt
7/14/2014 12:40:49 PM

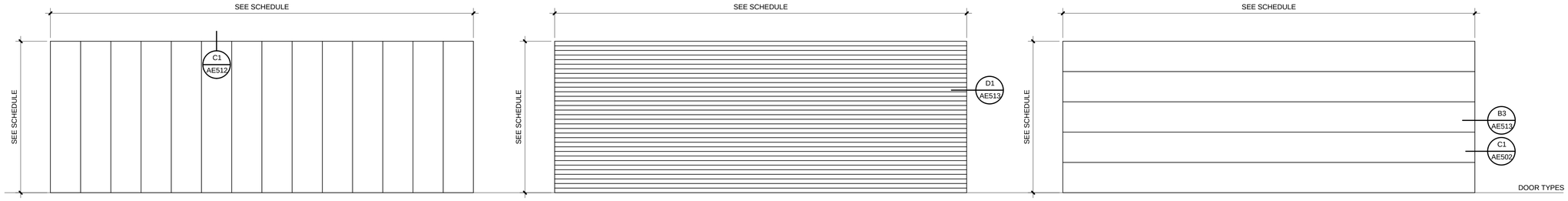

P-R2 ACCORDION DOOR

P-R1 OVERHEAD COILING DOOR

P-R HIGH SPEED ROLLING DOOR

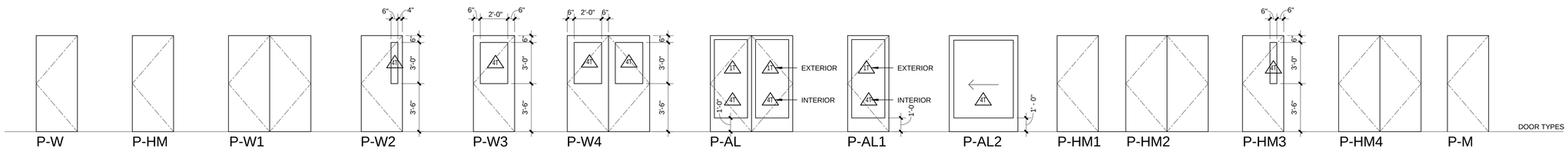

P-W	P-HM	P-W1	P-W2	P-W3	P-W4	P-AL	P-AL1	P-AL2	P-HM1	P-HM2	P-HM3	P-HM4	P-M
SOLID CORE WOOD STAIN	HOLLOW METAL PAINT	SOLID CORE WOOD STAIN	SOLID CORE WOOD WITH NARROW LITE STAIN	SOLID CORE WOOD / HALF LITE STAIN	SOLID CORE WOOD / HALF LITE STAIN	ALUMINUM PAINTED MEDIUM STILE ANODIZED	ALUMINUM PAINTED MEDIUM STILE ANODIZED	ICU DOOR	HOLLOW METAL INSULATED PAINT	HOLLOW METAL PAINT	HOLLOW METAL INSULATED W/ NARROW LITE PAINT	HOLLOW METAL INSULATED PAINT	LEVEL 4 BULLET PROOF. WOOD FINISH TO MATCH

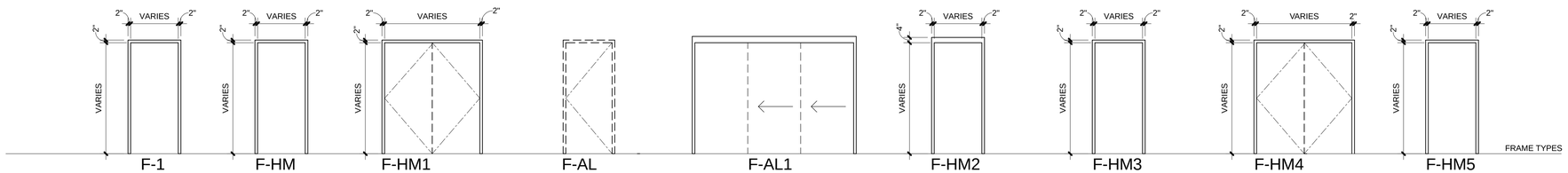

F-1	F-HM	F-HM1	F-AL	F-AL1	F-HM2	F-HM3	F-HM4	F-HM5
BULLET REISTANT FRAME. PAINT	2" x 5-7/8" H.M. DOOR FRAME. PAINT	2" x 5-7/8" H.M. DOOR FRAME. PAINT	PART OF WINDOW FRAME SEE WINDOW TYPES	ICU DOOR	2" x 5-7/8" H.M. DOOR FRAME. PAINT	2" x 8-1/4" H.M. DOOR FRAME. PAINT	2" x 8-1/4" H.M. DOOR FRAME. PAINT	2" x 7-1/8" H.M. DOOR FRAME. PAINT

CRSA
649 E. South Temple
Salt Lake City, UT 84102
801.355.5915

MWL
11798 N. Lakeridge Pkwy.
Ashland, VA 23005
804-228-7473

State of Utah
Department of Administrative Services
Division of Facilities Construction & Management
4110 State Office Building
Salt Lake City, Utah 84114
Phone: (801) 538 - 3018
Fax: (801) 538 - 3267

DIVISION OF FACILITIES CONSTRUCTION AND MANAGEMENT
REVIEWED FOR CODE COMPLIANCE
SIGNATURE: Ernie Calle
DATE: 08-05-2014

STATE OF UTAH #134096 MEHRDAD SAMIE LICENSED ARCHITECT
04-28-2014
ARCHITECT-ENGINEER STAMP

Unified State Laboratory Module 2

4451 South 2700 West, Taylorsville, UT 84118

DFCM #: 13020300

Project #: B13-024

DATE:	ISSUE TYPE:
APRIL 21, 2014	BID SET
CHECKED BY	J. NIELSEN
DRAWN BY	F. PITORE

DOOR TYPES

AE602

VOLUME 1

C:\Users\fernando\Documents_A_13024_Modil_2013_fernando.rvt
7/14/2014 12:40:57 PM

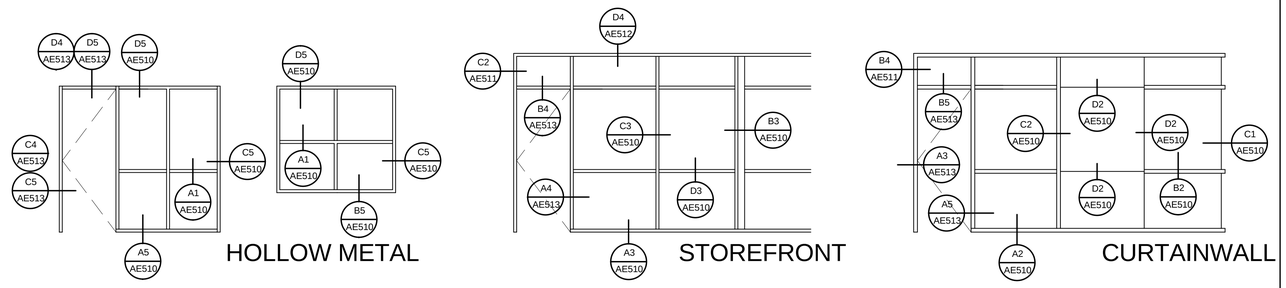

TYPICAL FRAMING DETAILS

FROSTED	
FROSTED GLASS FADE VISIBILITY FROM BOTTOM TO TOP.	
FROSTED GLAZING	
SPANDREL	

GENERAL NOTES

- GENERAL CONTRACTOR SHALL FIELD VERIFY ALL CONDITIONS AND SHALL REPORT TO THE ARCHITECT ANY UNKNOWN CONDITIONS, ERRORS OR CONFLICTS IN THE DRAWINGS BEFORE BEGINNING WORK.
- DO NOT SCALE DRAWINGS.

1" INSULATED LOW-E SOLAR BAN 70	1
1" TEMPERED LOW-E SOLAR BAN 70	1T
1" INSULATED FROSTED GLASS	2
1" SPANDREL	3
1/4" CLEAR LAMINATED GLASS	4
1/4" TEMPERED GLASS	4T
LEVEL 4 BULLET SECURITY GLAZING	5

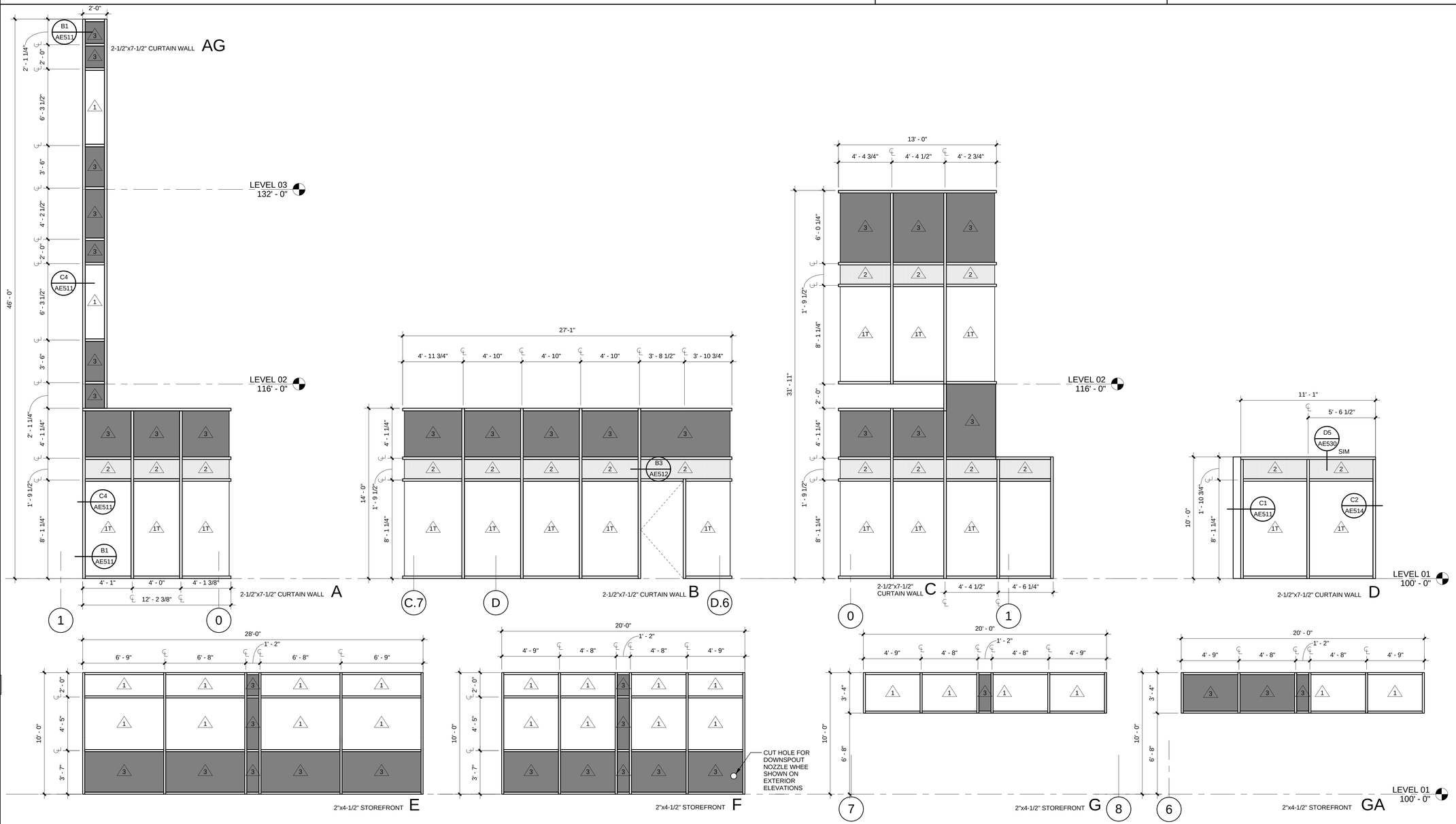

CRSA

649 E. South Temple
Salt Lake City, UT 84102
801.355.5915

MWL

11798 N. Lakeridge Pkwy.
Ashland, VA 23005
804-228-7473

State of Utah
Department of Administrative Services

Division of Facilities Construction & Management
4110 State Office Building
Salt Lake City, Utah 84114
Phone: (801) 538 - 3018
Fax: (801) 538 - 3267

DIVISION OF FACILITIES CONSTRUCTION AND MANAGEMENT
REVIEWED FOR CODE COMPLIANCE
SIGNATURE: Ernie Gulf
DATE: 08-05-2014

STATE OF UTAH #134096 MEHRDAD SAMIE LICENSED ARCHITECT
04-28-2014
ARCHITECT-ENGINEER STAMP

Unified State Laboratory Module 2

4451 South 2700 West, Taylorsville, UT 84118

DFCM #: 13020300

Project #: B13-024

DATE:	ISSUE TYPE:
APRIL 21, 2014	BID SET

CHECKED BY	J. NIELSEN
DRAWN BY	F. PITORE

WINDOW TYPES

AE603

VOLUME 1

C:\Users\fernando\Documents_A_13024_Modil_2013_fernando.rvt
7/14/2014 12:41:12 PM

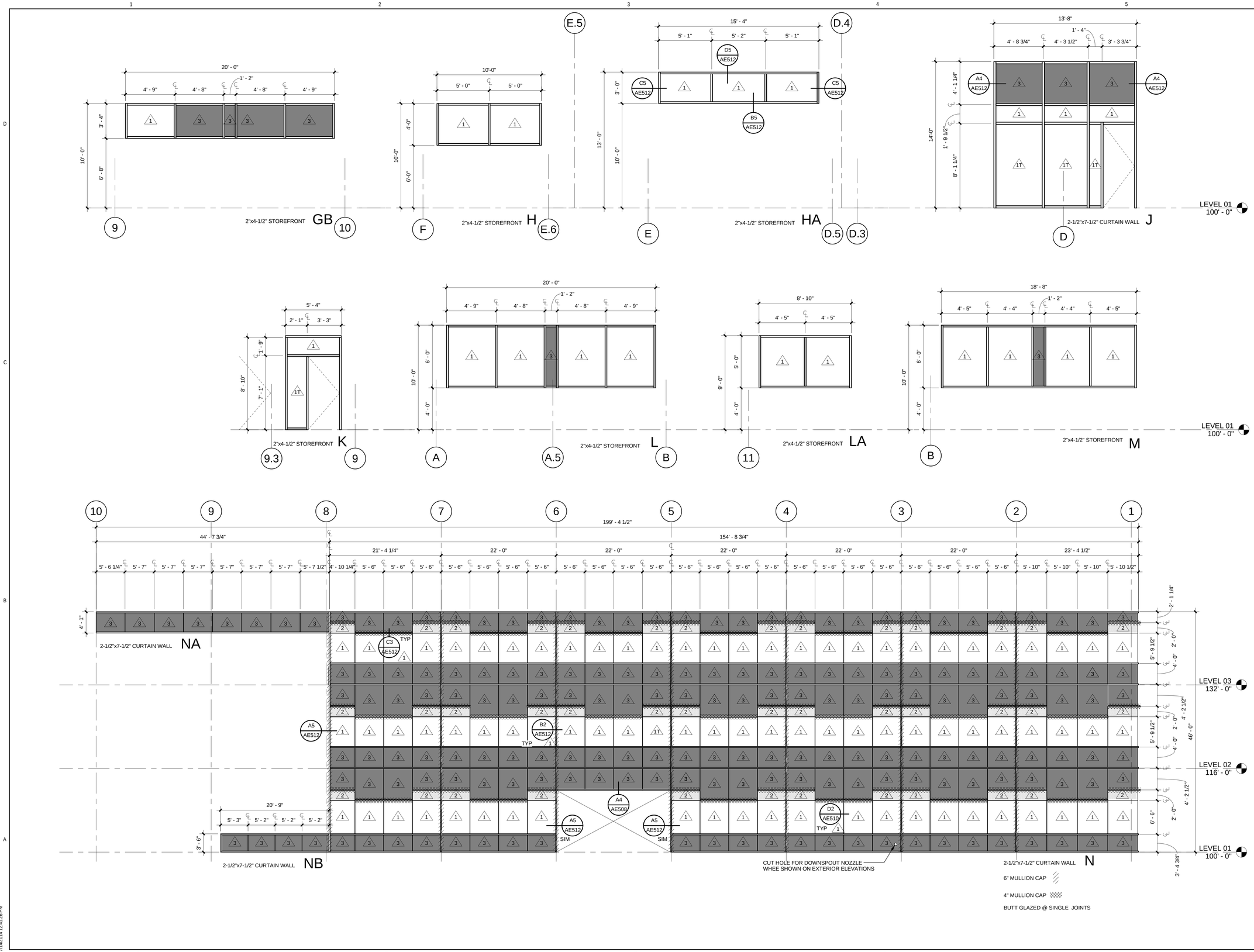

CRSA
649 E. South Temple
Salt Lake City, UT 84102
801.355.5915

MWL
11798 N. Lakeridge Pkwy.
Ashland, VA 23005
804-228-7473

State of Utah
Department of Administrative Services
Division of Facilities Construction & Management
4110 State Office Building
Salt Lake City, Utah 84114
Phone: (801) 538 - 3018
Fax: (801) 538 - 3267

DIVISION OF FACILITIES CONSTRUCTION AND MANAGEMENT
REVIEWED FOR CODE COMPLIANCE
SIGNATURE: Ernie Calle
DATE: 08-05-2014

STATE OF UTAH #134096 MEHRDAD SAMIE LICENSED ARCHITECT
04.28.2014
ARCHITECT-ENGINEER STAMP

Unified State Laboratory Module 2

4451 South 2700 West, Taylorsville, UT 84118

DFCM #: 13020300
Project #: B13-024

DATE:	ISSUE TYPE:
APRIL 21, 2014	BID SET
CHECKED BY	J. NIELSEN
DRAWN BY	F. PITORE

WINDOW TYPES

AE604

VOLUME 1

C:\Users\fernando\Documents_A_13024_Modll_2013_fernando.rvt
7/14/2014 12:41:26 PM

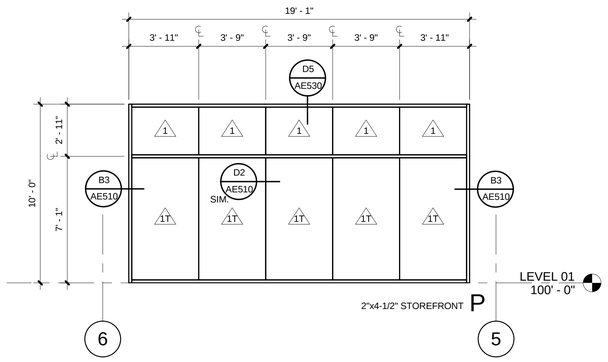

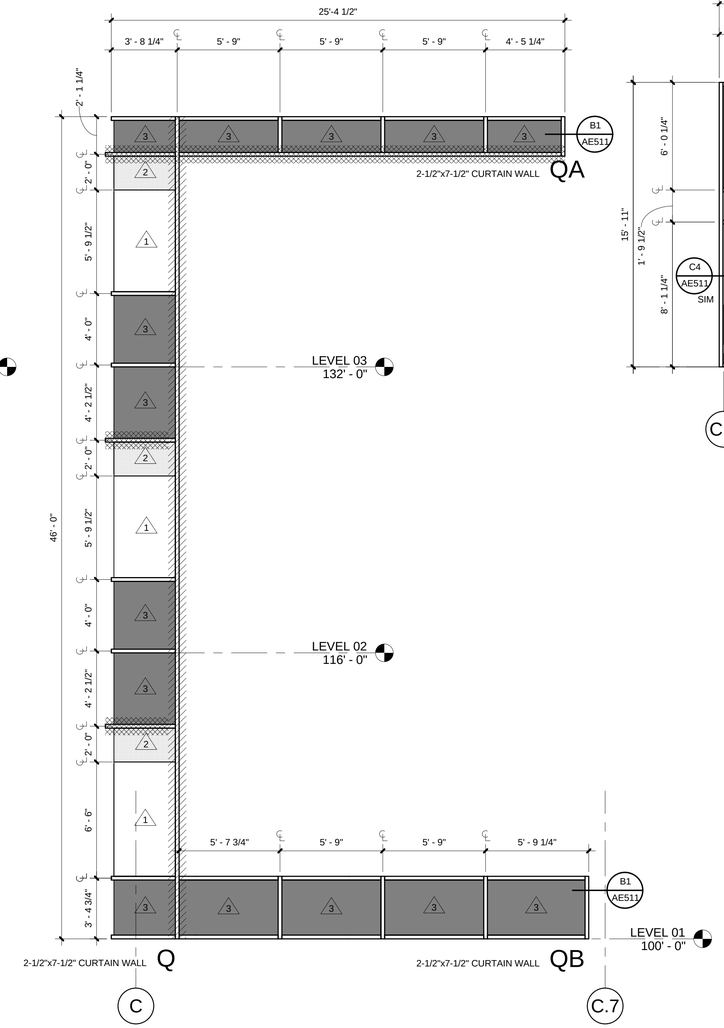

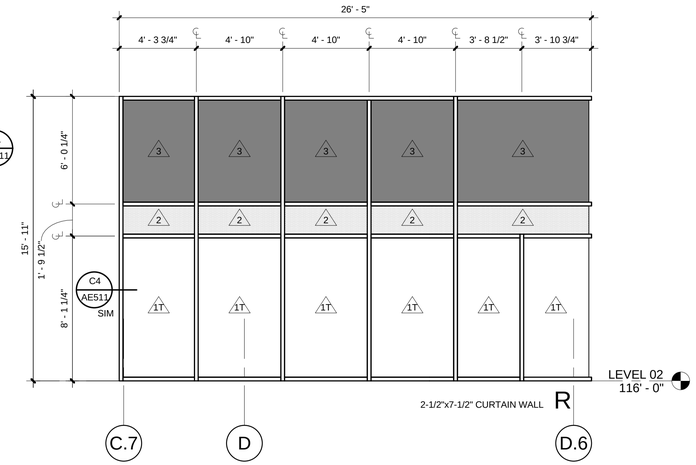

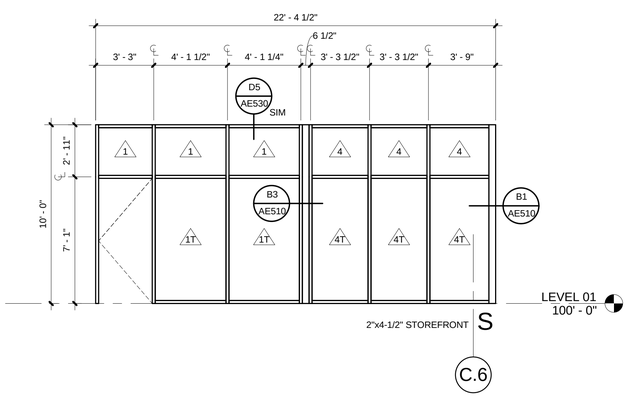

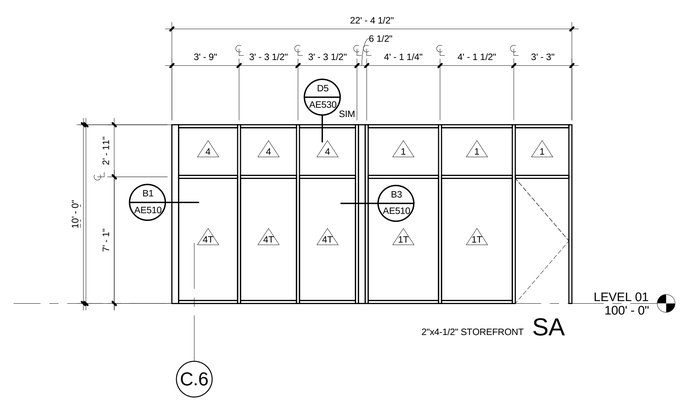

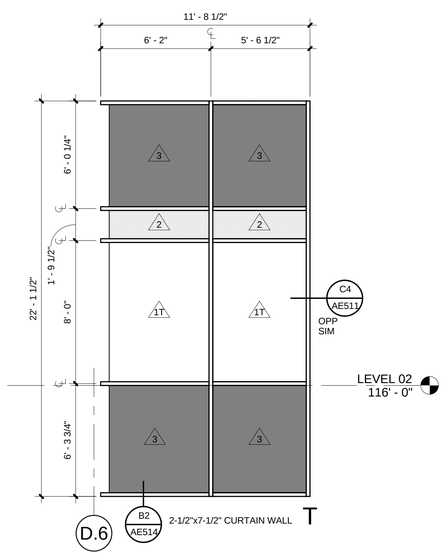

CRSA

649 E. South Temple
Salt Lake City, UT 84102
801.355.5915

MWL

11798 N. Lakeridge Pkwy.
Ashland, VA 23005
804-228-7473

State of Utah
Department of Administrative Services
Division of Facilities Construction & Management
4110 State Office Building
Salt Lake City, Utah 84114
Phone: (801) 538 - 3018
Fax: (801) 538 - 3267

DIVISION OF FACILITIES CONSTRUCTION AND MANAGEMENT
REVIEWED FOR CODE COMPLIANCE
SIGNATURE: Ernie Calle
DATE: 08-05-2014

STATE OF UTAH
#134096
MEHRDAD SAMIE
LICENSED ARCHITECT
04.28.2014
ARCHITECT-ENGINEER STAMP

Unified State Laboratory Module 2

4451 South 2700 West,
Taylorsville, UT 84118

DFCM #: 13020300

Project #: B13-024

DATE:	ISSUE TYPE:
APRIL 21, 2014	BID SET
CHECKED BY	J. NIELSEN
DRAWN BY	F. PITORE

WINDOW TYPES

AE605

VOLUME 1

C:\Users\fernando\Documents_A_13024_Modli_2013_fernando.rvt
7/14/2014 12:41:42 PM

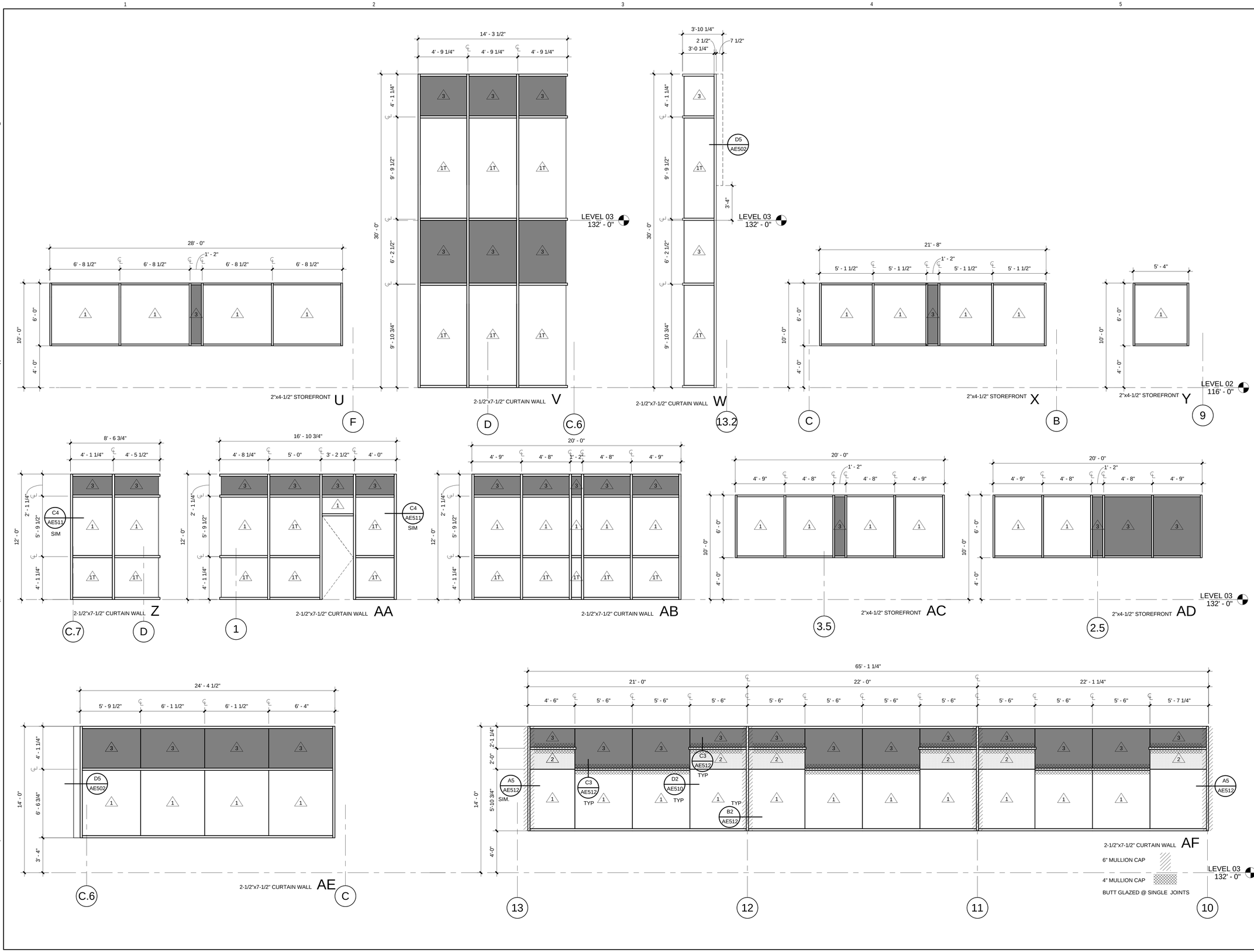

CRSA

649 E. South Temple
Salt Lake City, UT 84102
801.355.5915

MWL

11798 N. Lakeridge Pkwy.
Ashland, VA 23005
804-228-7473

State of Utah
Department of Administrative Services

DFCM
Division of Facilities Construction & Management
4110 State Office Building
Salt Lake City, Utah 84114
Phone: (801) 538 - 3018
Fax: (801) 538 - 3267

DIVISION OF FACILITIES CONSTRUCTION AND MANAGEMENT
REVIEWED FOR CODE COMPLIANCE
SIGNATURE: Ernie Cate
DATE: 08-05-2014

STATE OF UTAH #134098 MEHRDAD SAMIE LICENSED ARCHITECT
04.28.2014
ARCHITECT-ENGINEER STAMP

Unified State Laboratory Module 2

4451 South 2700 West,
Taylorsville, UT 84118

DFCM #:	13020300
Project #:	B13-024

DATE:	ISSUE TYPE:
APRIL 21, 2014	BID SET
CHECKED BY	J. NIELSEN
DRAWN BY	F. PITORE

WINDOW TYPES

AE606

VOLUME 1

C:\Users\fernando\Documents_A_13024_Modill_2013_fernando.rvt
7/14/2014 12:41:55 PM

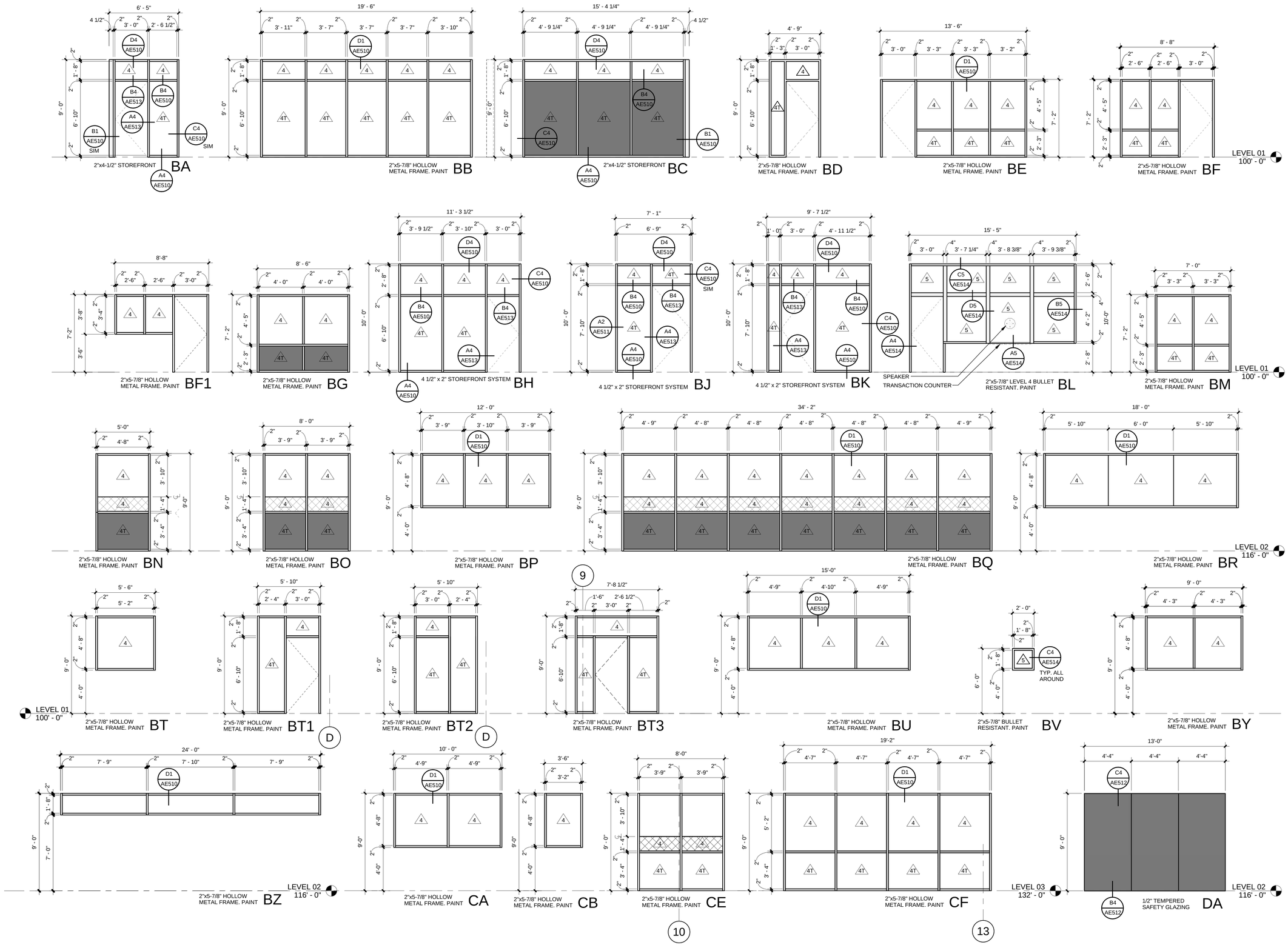

CRSA

649 E. South Temple
Salt Lake City, UT 84102
801.355.5915

MWL

11798 N. Lakeridge Pkwy.
Ashland, VA 23005
804-228-7473

State of Utah
Department of Administrative Services

Division of Facilities Construction & Management
4110 State Office Building
Salt Lake City, Utah 84114
Phone: (801) 538 - 3018
Fax: (801) 538 - 3267

DIVISION OF FACILITIES CONSTRUCTION AND MANAGEMENT
REVIEWED FOR CODE COMPLIANCE
SIGNATURE: Eric Ralph
DATE: 08-05-2014

STATE OF UTAH #134096 MEHRDAD SAMIE LICENSED ARCHITECT
04-28-2014
ARCHITECT-ENGINEER STAMP

Unified State Laboratory Module 2

4451 South 2700 West, Taylorsville, UT 84118

DFCM #:	13020300
Project #:	B13-024

DATE:	ISSUE TYPE:
APRIL 21, 2014	BID SET

CHECKED BY	J. NIELSEN
DRAWN BY	F. PITORE

WINDOW TYPES

AE607

VOLUME 1

C:\Users\fernando\Documents_A_13024_Modli_2013_fernando.rvt
7/14/2014 12:42:16 PM

ACCESSORY SCHEDULE (BASIS OF DESIGN)

ITEM	MAKE / MODEL	OPOI	OPCI	CPCI	ROOM
BENCH	SECTION 10 5133			X	107, 108, 109, 110
CUBICLE CURTAIN	NELSON ECLIPSE ROOM DARKENING FABRIC CEILING MOUNTED TRACK 1200LT			X	205 (5) TOTAL. SEE PLAN.
FOLDING SEAT	BOBRICK B-5191			X	127, 128 (1 EACH ROOM)
FOLDING SHOWER SEAT	BOBRICK B-518			X	127, 128 (1 EACH ROOM)
GRAB BAR 18"	BOBRICK B-5806 x 18			X	105, 106, 107, 108, 109, 116A, 117A, 127, 128, 137, 139, 203, 204, 307, 308
GRAB BAR 30"	BOBRICK B-5806 x 30			X	127, 128
GRAB BAR 36"	BOBRICK B-5806 x 36			X	105, 106, 107, 108, 109, 116A, 117A, 127, 128, 137, 139, 203, 204, 307, 308
GRAB BAR 42"	BOBRICK B-5806 x 42			X	105, 106, 107, 108, 109, 116A, 117A, 127, 128, 137, 139, 203, 204, 307, 308
MIRROR 24" x 36"	BOBRICK B-165 2436			X	105, 106, 107, 108, 109, 116A, 117A, 127, 128, 137, 139, 203, 204, 307, 308
MOP RACK 24"	BOBRICK B-239x34			X	100E, 122B, 124E, 210, 300E
PAPER TOWEL DISPENSER		X		X	105, 106, 107, 108, 109, 116A, 117A, 127, 128, 137, 139, 203, 204, 307, 308
ROBE HOOK	BOBRICK, B-672			X	107, 108, 109 (2 EACH ROOM)
ROLLER SHADES (MANUAL)	VERTILUX POLYSCREEN VISION 550, COLOR WHITE GRAY (98) OPACITY 5%			X	101,101A, 102A, 102B, 102C, 102D, 102E, 104, 111, 120, 120A, 124, 124A, 130A, 130B, 130C, 130D, 130E, 130F, 130G, 130H, 130J, 130K, 130P, 138, 201, 201A, 201B, 201C, 201D, 202, 202A, 208D, 209, 209A, 211, 212, 213, 215, 216, 217, 301A, 301B, 301C, 302, 303A, 304, 304A, 306, 309, 309A, 310, 310B, 310C, 310D, 311, 311C, 312, 312A, 313, 314, 315, 315A, 316
ROLLER SHADES (MANUAL)	VERTILUX POLYSCREEN VISION 550, COLOR WHITE GRAY (98) OPACITY 0%			X	205
ROLLER SHADES (MOTORIZED)	VERTILUX POLYSCREEN VISION 550, MOTORIZED DUAL SHADE			X	102F ALL WINDOWS
SANITARY NAPKIN DISPENSER	BOBRICK B-3706			X	105, 128, 203, 307
SANITARY NAPKIN DISPOSAL	BOBRICK B-270			X	105, 128, 203, 307
SHOWER CURTAIN	BOBRICK, B-204-1 & B-204-3			X	107, 108, 109 (1 EACH ROOM)
SHOWER CURTAIN ROD	BOBRICK B-6047 x 36			X	127, 128 (1 EACH ROOM)
SHOWER CURTAIN ROD (SQUARE)	WHITTINGTON NEO ANGLE SHOWER ROD WITH CEILING SUPPORT - 36" x 16" x 36"			X	107, 108, 109 (1 EACH ROOM)
SOAP DISH	BOBRICK, B-680			X	107, 108, 109 (1 EACH ROOM)
SOAP DISPENSER		X		X	105, 106, 107, 108, 109, 116A, 117A, 127, 128, 137, 139, 203, 204, 307, 308
TOILET PAPER DISPENSER		X		X	105, 106, 107, 108, 109, 116A, 117A, 127, 128, 137, 139, 203, 204, 307, 308
TOWEL SHELF	BOBRICK, B-676 W24			X	107, 108, 109 (1 EACH ROOM)
WHITEBOARD 4' x 4'	ADP LEMCO/SKU202AD			X	115, 207
WHITEBOARD 4' x 5'	ADP LEMCO/SKU202AE			X	134, 136
WHITEBOARD 4' x 8'	ADP LEMCO/SKU202AH			X	102F, 111, 131

GENERAL NOTES

- SEE IL SHEETS AND SPEC SECTION 11 600 FOR ACCESSORIES IN LABORATORY SPACES

EQUIPMENT SCHEDULE

ITEM	OPOI	OPCI	CPCI	ROOM
REFRIGERATOR	X			104; 316
MICROWAVE	X			104; 316

FINISH LEGEND

ITEM	PRODUCT	SPECIFICATION (BASIS OF DESIGN)	NOTES
WALLS			
P1	PAINT COLOR 1	SHERWIN WILLIAMS (SW 7064) PASSIVE (E75)	FOR USE ON FIELD WALLS
P2	PAINT COLOR 2	SHERWIN WILLIAMS (SW 7007) CEILING BRIGHT WHITE (E16)	FOR PRIMARY USE ON CEILINGS
P3	PAINT COLOR 3	SHERWIN WILLIAMS (SW 6225) SLEEPY BLUE (FN226)	LEVEL 01 LIGHT ACCENT
P4	PAINT COLOR 4	SHERWIN WILLIAMS (SW 6226) LANGUID BLUE (FN227)	LEVEL 01 DARK ACCENT
P5	PAINT COLOR 5	SHERWIN WILLIAMS (SW 6500) OPEN SEAS (B-G/B/83)	LEVEL 02 LIGHT ACCENT
P6	PAINT COLOR 6	SHERWIN WILLIAMS (SW 6494) LAKESHORE (B-G/B/70)	LEVEL 02 DARK ACCENT
P7	PAINT COLOR 7	SHERWIN WILLIAMS (SW 6443) RELISH (Y-G/G/120)	LEVEL 03 LIGHT ACCENT
P8	PAINT COLOR 8	SHERWIN WILLIAMS (SW 6444) LOUNGE GREEN (Y-G/G/121)	LEVEL 03 DARK ACCENT
P9	PAINT COLOR 9	SHERWIN WILLIAMS (SW 6349) PENNYWISE (R-O/O/100)	GENERAL FOR USE IN CONFERENCE, LIBRARY, BREAK AND RESTROOMS
P10	PAINT COLOR 10	SHERWIN WILLIAMS (SW 6382) CEREMONIAL GOLD (Y-O/Y/107)	GENERAL ACCENT FOR USE IN CONFERENCE, LIBRARY, BREAK AND RESTROOMS
C1	CONCRETE NO FINISH	SEE STRUCTURAL DRAWINGS	
T1	WALL TILE 1	8"X20" DALTILE "IDENTITY" GLAZED CERAMIC TILE GLOSS & MATTE FINISH COLOR PARAMOUNT WHITE (MY60)	SEE DETAIL A3/AE560 FOR INSTALLATION INSTRUCTIONS IN RESTROOMS. MAPEI GROUT, COLOR AVALANCHE (038).
T2	WALL TILE 2	4"X8", 4"X12" DALTILE "RITTENHOUSE SQUARE" GLAZED CERAMIC TILE SEMI-GLOSS (0190) & MATTE FINISH (0790) COLOR ARCTIC WHITE	SEE DETAIL C3/AE560 FOR INSTALLATION INSTRUCTIONS IN RESTROOMS. MAPEI GROUT, COLOR AVALANCHE (038).
EP	EPOXY RESIN WALL COATING	COLOR TO BE DETERMINED BY ARCHITECT	FOR USE IN AUTOPSY, BODY RECEIVING, TISSUE RECOVERY, SPECIAL PROCEDURE, XRAY
N	NO WALL FINISH		
FRP	WALL PANEL	REFER TO SPECIFICATIONS	REFER TO SPECIFICATIONS
FLOORS			
CP1	CARPET 1	MOHAWK GROUP "JEAN MODULAR" 24"X24" CARPET TILE COLOR LOW RISE (966), JEAN (GT177)	
CP2	CARPET 2	MOHAWK GROUP "JEAN MODULAR" 24"X24" CARPET TILE COLOR LOW RISE (966), HEM (GT178)	
CP3	CARPET 3	MOHAWK GROUP "JEAN MODULAR" 24"X24" CARPET TILE COLOR LOW RISE (966), SELVEDGE (GT179)	
CP4	CARPET 4	MOHAWK GROUP "COLORBEAT MODULAR" 24"X24" CARPET TILE COLOR COLORBEAT (GT160), PARAKEET (646).	
MT	ENTRY MAT	LEE'S STEPUP WROUGHT IRON 438	
SC	SEALED CONCRETE	SEE SECTION 09 9123.4.6.A	ALL EXPOSED CONCRETE FLOORS
CP	DECK PAVERS	24"X24" ROOF DECK CONCRETE PAVERS, WESTILE PLAZA PAVER	
F1	TILE 1 - LARGE FORMAT ENTRY FLOOR	24"X24", 24"X48" DALTILE "EXHIBITION" PORCELAIN TILE UNPOLISHED & TEXTURED COLOR TREND GRAY (EX03)	SEE DETAIL A5/AE560 FOR INSTALLATION PATTERN. MAPEI GROUT, COLOR PEWTER (02).
F2	TILE 2 - RESTROOMS	12"X12", 12"X24" DALTILE "UNITY" COLORBODY PORCELAIN TILE POLISHED & UNPOLISHED COLOR ASH GRAY (P405)	USE 12"X12" POLISHED TILE IN ALL RESTROOMS AND LOCKER ROOMS U.N.O. SEE DETAIL C5/AE560 FOR INSTALLATION PATTERN IN LARGE RESTROOMS. MAPEI GROUT, COLOR PEWTER (02).
F3	SHOWER ROOM TILE	2"X2" DALTILE KEYSTONE SUEDE GRAY (D182).	MAPEI GROUT, COLOR PEWTER (02)
EF	EPOXY TERRAZZO FLOORING	STONHARD "STONRES RTX" FLOORING, COLOR TO BE DETERMINED BY ARCHITECT.	
RU	RUBBER FLOORING - NOSE & TREAD SYSTEM	MOHAWK GROUP STAIR TREADS TRUE, NOSE & TREAD RUBBER FLOORING SYSTEM, SEE SPEC SECTION 09 6513.	TO BE USED ON STAIR NOSE, TREAD AND LANDINGS ONLY. COLOR COAL (TRR-32)
R1	RESILIENT FLOORING 1	GERFLOR "MIPOLAM SYMBIOZ" 2M VINYL SHEET FLOORING COLOR SEA STORM (6044)	GENERAL USE FOR HALLWAYS, OPEN LABS, ETC. HEAT WELD RESILIENT FLOORING SEAMS
R2	RESILIENT FLOORING 2	GERFLOR "MIPOLAM SYMBIOZ" 2M VINYL SHEET FLOORING COLOR BLACK DIAMOND (6059)	ACCENT COLOR FOR HALLWAY NICHES. HEAT WELD RESILIENT FLOORING SEAMS
R3	RESILIENT FLOORING 3	GERFLOR "MIPOLAM SYMBIOZ" 2M VINYL SHEET FLOORING COLOR BLUE SKY (6006)	LEVEL 01 ACCENT COLOR. HEAT WELD RESILIENT FLOORING SEAMS
R4	RESILIENT FLOORING 4	GERFLOR "MIPOLAM SYMBIOZ" 2M VINYL SHEET FLOORING COLOR LAGOON (6037)	LEVEL 02 ACCENT COLOR. HEAT WELD RESILIENT FLOORING SEAMS
R5	RESILIENT FLOORING 5	GERFLOR "MIPOLAM SYMBIOZ" 2M VINYL SHEET FLOORING COLOR GRASS (6017)	LEVEL 03 ACCENT COLOR. HEAT WELD RESILIENT FLOORING SEAMS
H	TRAFFIC COATING	SECTION 07 5500	ALL HOUSEKEEPING PADS SHOULD RECEIVE TRAFFIC COATING PRIOR TO EQUIPMENT INSTALLATION INCLUDING AIR HANDLERS.
BASE			
B1	RUBBER BASE COLOR 1	4" ROPPE 700 SERIES VINYL WALL BASE W/ STANDARD TOE PROFILE COLOR CHARCOAL (123)	
TB1	TILE BASE 1	6"X24", 6"X48" DALTILE "EXHIBITION" PORCELAIN TILE UNPOLISHED & TEXTURED COLOR TREND GRAY (EX03)	CUT TILE TO 6", ALIGN JOINTS W/ FLOOR TILE, CAP W/ ALUMINUM SCHLUTER STRIP RENO-U A100
TB2	TILE BASE 2	6"X12", 6"X24" DALTILE "UNITY" COLORBODY PORCELAIN TILE POLISHED & UNPOLISHED COLOR ASH GRAY (P405)	CUT TILE TO 6", ALIGN JOINTS W/ FLOOR TILE, CAP W/ ALUMINUM SCHLUTER STRIP RENO-U A100
IC	INTEGRAL COVE	WHERE INDICATED MEANS THAT FLOORING TURNS UP WALL TO CREATE 6" HIGH INTEGRAL COVE BASE	
N	NO BASE FINISH		
CEILINGS			
C1	CEILING 1	24"X24"X3/4" ARMSTRONG OPTIMA W/ INTERLUDE 9/16" XL HRC	
C2	CEILING 2	5/8" GYPSUM BOARD W/ PAINT COLOR 2	
C3	CEILING 3	24"X24"X3/4" ARMSTRONG HEALTHZONE ULTIMA	
C4	CEILING 4	SAME AS SFT	
C5	CEILING 5	8" CAST IN PLACE CONCRETE CEILING, SEE STRUCTURAL DRAWINGS.	
SFT	EXTERIOR SOFFIT	FIRESTONE UNA-CLAD 500 METAL SOFFIT FLUSH PANEL SYSTEM 12" WIDTH, COLOR CHARCOAL GRAY. SEE SPEC.	
MISCELLANEOUS INTERIOR FINISHES			
	ACCORDIAN WALL PARTITION	ACCORDIAN WALL SYSTEM FINISH, MODERNFOLD SOUND MASTER (SM 12), ARCHITECT TO SELECT COLOR. SEE SPEC.	
	CABINETS	WILSONART COSMIC STRANDZ LAMINATE (4941K-18).	ALL ARCHITECTURAL CABINETS
	COUNTERTOP	CAMBRIA NATURAL QUARTZ COUNTERTOP, COLOR FIELDSTONE (2160).	ALL ARCHITECTURAL COUNTERTOPS
	LAB COUNTERTOP	EPOXY RESIN.	COLOR LEVELS 01 & 02 = BLACK (#06), LEVEL 03 = CHARCOAL GRAY (#13).
	TOILET PARTITION	STAINLESS STEEL	
	LAVATORY COUNTERTOP	CAMBRIA NATURAL QUARTZ COUNTERTOP, COLOR DEVON (2170). SEE SPEC.	COUNTERTOP FOR ALL BATHROOMS & LOCKER ROOMS
	WINDOW SILL 1	WINDOW SILL 2 CAMBRIA NATURAL QUARTZ COUNTEROP, COLOR TEMPLETON (0230). SEE SPEC.	WINDOW SILL @ ALL OTHER INTERIOR WINDOWS
	WINDOW SILL 2	EPOXY RESIN.	USE AT ALL LABORATORY WINDOWS PER DETAIL 8/IL503, COLOR LEVELS 01 & 02 BLACK (06), LEVEL 03 CHARCOAL GRAY (13).
EXTERIOR FINISHES			
CA	CONCRETE MASONRY UNIT A	4"X8"X16" W/ SINGLE VERTICAL KERF IN CENTER OF 16" FACE, BUEHNER BLOCK COMPANY CONCRETE MASONRY UNITS HONED, COLOR GRANITE.	STACK BOND INSTALLATION PATTERN
CB	CONCRETE MASONRY UNIT B	4"X8"X16" BUEHNER BLOCK COMPANY CONCRETE MASONRY UNITS HONED, COLOR EBONY.	RUNNING BOND INSTALLATION PATTERN
CC	CONCRETE MASONRY UNIT C	HONED, MATCH EXISTING COLOR @ MODULE I	
CD	CONCRETE MASONRY UNIT D	HONED, MATCH EXISTING COLOR @ MODULE I	
EF	EXTERIOR FENCING	STANDARD GALVANIZED CORRUGATED METAL PANELS. SEE SPEC.	SEE LANDSCAPE DRAWINGS
A	METAL PANEL A	FIRESTONE UNA-CLAD DELTA CONCEALED FASTENER PANEL SYSTEM 12" (CFP-12), COLOR PATINA GREEN.	TO BE INSTALLED VERTICALLY
B	METAL PANEL B	ACM METAL PANEL SYSTEM, COLOR CHARCOAL GRAY. SEE SPEC.	
E	METAL PANEL E	FIRESTONE UNA-CLAD DELTA CONCEALED FASTENER PANEL SYSTEM 16" (CFP-16F), COLOR CHARCOAL GRAY. SEE SPEC.	TO BE INSTALLED HORIZONTALLY

CRSA
649 E. South Temple
Salt Lake City, UT 84102
801.355.5915

MWL
11798 N. Lakeridge Pkwy.
Ashland, VA 23005
804-228-7473

State of Utah
Department of Administrative Services
Division of Facilities Construction & Management
DFCM
4110 State Office Building
Salt Lake City, Utah 84114
Phone: (801) 538 - 3018
Fax: (801) 538 - 3267

DIVISION OF FACILITIES CONSTRUCTION AND MANAGEMENT
REVIEWED FOR CODE COMPLIANCE
SIGNATURE:
DATE: 08-05-2014

STATE OF UTAH
#134098
MEHRDAD SAMIE
LICENSED ARCHITECT
04.28.2014
ARCHITECT-ENGINEER STAMP

Unified State Laboratory Module 2

4451 South 2700 West, Taylorsville, UT 84118

DFCM #:	13020300
Project #:	B13-024
DATE:	ISSUE TYPE:
APRIL 21, 2014	BID SET
CHECKED BY	J. Nielsen
DRAWN BY	F. PITORE

FINISH LEGEND & ACCESSORY SCHEDULE

AE610

VOLUME 1

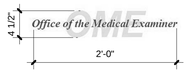

WHITE VINYL LETTERS ON SOUTH GLASS WALL IN 138 AND SLIDING GLASS DOOR IN 121.

OME DEPARTMENT LOGO (C3 / AE611)

1" = 1'-0"

SIGNAGE SCHEDULE	
SIGNAGE TYPE	**ROOM NUMBER**
STAIR	S-101; S-102; S-103; S-201; S-202; S-203; S-301; S-302; S-303
ELEVATOR	E-1; E-2; E-3
RESTROOM SIGNAGE	100H; 200; 200B; 300A; 300B
CLASSROOM SIGN	101; 110; 119; 120; 125; 126; 128; 129; 130; 131; 132; 201; 207:16; 218; 230; 238; 243; 256; 257; 263; 264; SEATING; 301; 302; 303; 304; 306; 307; 308; 312; 313; 318; 319; 320; 321; 322; 323; 324; 325
ROOM NAME	100H; 102; 103; 104; 105; 106; 107; 108; 109; 111; 112; 113; 114; 116; 117; 118; 121; 122; 127A; 127B 127C; 133; 200; 202; 203; 204; 205; 206; 208; 209; 210; 211; 212; 213; 214; 215; 217; 219; 220; 221; 222; 223; 224; 225; 226; 231; 232; 233; 234; 235; 236; 237; 239; 240; 244; 245; 246; 247; 248; 249; 250; 251; 252; 253; 254; 255; 256; 258; 259; 260; 261; 262; 265; 266; 300A; 314; 315; 326
UNISEX RESTROOM	115
MEN'S RESTROOM	123; 241; 227; 316; 309
USE EXIT STAIRS	100; 100H; 100E; 200; 200B; 300A; 300B
WOMEN'S RESTROOM	124; 242; 229; 311; 317
OME DEPARTMENT LOGO	121, 138 SEE DETAIL C3/AE611

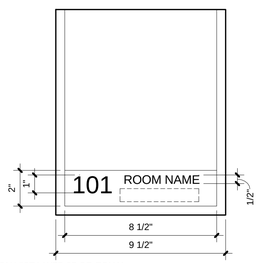

BASED ON VISTA WFP 85 OR EQUAL

SIGN NUMBER & BRAILLE ARE RAISED/TACTILE ON SURFACE 1.
OCCUPANT NAME, FIRST AND SECOND LINE TITLES, etc., ON SURFACE 2.
GRAPHIC AND LOGO (DESIGN STILL TO BE DETEREMIND) ON SURFACE 3
*BID SO INDIVIDUAL SIGN SIZES MAY BE ALTERED AS REQUIRED BY VERBIAGE

SIGN (B2 / AE611)

3" = 1'-0"

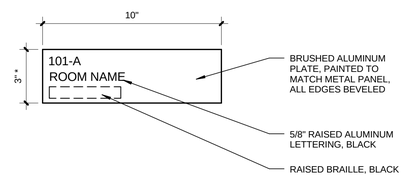

*NOTE:
SIZE SIGN AS REQUIRED FOR SCHEDULED VERBIAGE

ROOM NAME (B3 / AE611)

3" = 1'-0"

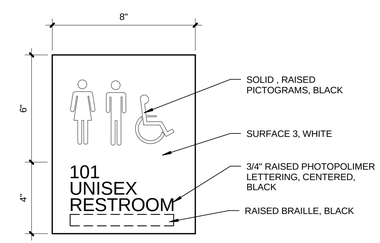

BASED ON VISTA V150 (WFP35) OR EQUAL

UNISEX RESTROOM (B4 / AE611)

3" = 1'-0"

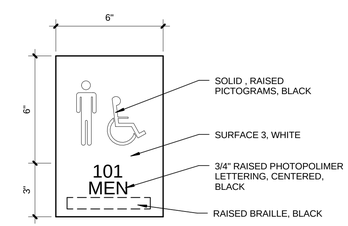

BASED ON VISTA V150 (WFP35) OR EQUAL

MEN'S RESTROOM (B5 / AE611)

3" = 1'-0"

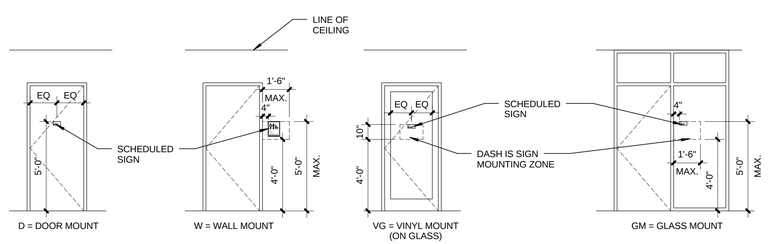

SIGN MOUNTING HEIGHTS (A3 / AE611)

1/4" = 1'-0"

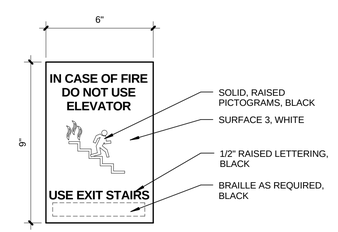

BASED ON VISTA V150 (WFP35) OR EQUAL

EXIT STAIRS (A4 / AE611)

3" = 1'-0"

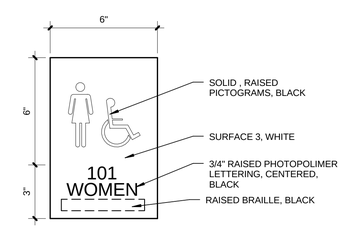

BASED ON VISTA V150 (WFP35) OR EQUAL

WOMEN'S RESTROOM (A5 / AE611)

3" = 1'-0"

CRSA
649 E. South Temple
Salt Lake City, UT 84102
801.355.5915

MWL
11798 N. Lakeridge Pkwy.
Ashland, VA 23005
804-228-7473

State of Utah
Department of Administrative Services
Division of Facilities Construction & Management
4110 State Office Building
Salt Lake City, Utah 84114
Phone: (801) 538 - 3018
Fax: (801) 538 - 3267

DIVISION OF FACILITIES CONSTRUCTION AND MANAGEMENT
REVIEWED FOR CODE COMPLIANCE
SIGNATURE: Ernie Galyo
DATE: 08-05-2014

STATE OF UTAH
#134096
MEHRDAD SAMIE
LICENSED ARCHITECT
04.28.2014
ARCHITECT-ENGINEER STAMP

Unified State Laboratory Module 2

4451 South 2700 West, Taylorsville, UT 84118

DFCM #: 13020300
Project #: B13-024

DATE:	ISSUE TYPE:
APRIL 21, 2014	BID SET
CHECKED BY	Checker
DRAWN BY	F. PITORE

SIGNAGE

AE611

VOLUME 1

C:\Users\fernando\Documents_A_13024_Modll_2013_fernando.rvt
7/14/2014 12:42:35 PM

LAB SINK SCHEDULE "LS–x"

MARK	TYPE	MATERIAL	SIZE wx FBxd (+/- 1")	SERVICES: WATER TYPE: HOT&COLD H20	PURIFIED	FOOT PEDAL	EYE WASH	PAPER DISPENSER TOWEL	IR
LS–1	SINGLE BOWL	EPOXY RESIN	25 x 15 x 5	X	SEE PLANS		SEE PLANS	X	X
LS–1SS	SINGLE BOWL	ST. STL.	25 x 15 x 5	X	SEE PLANS		SEE PLANS	X	X
LS–2	SINGLE BOWL	EPOXY RESIN	25 x 15 x 10	X	SEE PLANS	X	SEE PLANS	X	
LS–2SS	SINGLE BOWL	ST. STL.	25 x 15 x 10	X	SEE PLANS	X	SEE PLANS	X	
LS–3	DOUBLE BOWL	EPOXY RESIN	36 x 15 x 10	X	SEE PLANS	X	SEE PLANS	X	
LS–4SS	SINGLE BOWL	ST. STL.	72 x 18 x 6	X	SEE PLANS	X	SEE PLANS		
LS–5SS	SINGLE BOWL W/ DRAIN BOARD	ST. STL.	25 x 12 x 5	X	SEE PLANS	X	SEE PLANS		

NOTES:
1. NOT USED
2. NOT USED
3. PROVIDE 1/2" DIA. HOLE & TEMP CAP. ADJACENT TO "WP" (WATER POLISHERS) AS SHOWN ON TYPICAL LAB SINK DETAIL AND WHERE NOTED ON LAB PLANS.
4. NOT USED
5. LAB TOP DROP IN MODEL OR EQUAL
6. REFER TO TYP. SINK DETAIL 1/IL501
7. SS SUFFIX REFERS TO STAINLESS STEEL

FUME HOOD SCHEDULE "FH x–y"

MARK	LINER/WORK SURFACE	SIZE	SASH TYPE/ OPENING	PLUMBING SERVICES (ONE SIDE)	ELECTRICAL SERVICES, (BOTH SIDES)	NOTES
FH4–1	NOTE 1	48" W X 31.25" D	VERTICAL 18" OPNG.	SEE LAB PLANS	DUPLEX POWER, OUTLET, GFI	PERFORATED ST. STL. PAPER SCREEN
FH4–ADA	NOTE 1	48" W X 31.25" D	VERTICAL 18" OPNG.	SEE LAB PLANS		PERFORATED ST. STL. PAPER SCREEN
FH5–ADA–SS	ST. STL.	60" W X 31.25" D	VERTICAL 18" OPNG.	SEE LAB PLANS	DUPLEX POWER, OUTLET, GFI	PERFORATED ST. STL. PAPER SCREEN ALL STAINLESS STEEL CONSTUCTION
FH6–1	NOTE 1	72" W X 31.25" D	VERTICAL 18" OPNG.	SEE LAB PLANS	DUPLEX POWER, OUTLET, GFI	PERFORATED ST. STL. PAPER SCREEN
FH6–2	ST. STL.	72" W X 31.25" D	VERTICAL 18" OPNG.	SEE LAB PLANS	DUPLEX POWER, OUTLET, GFI	PERFORATED ST. STL. PAPER SCREEN 1'–6"W X 10"D INTEGRAL STAINLESS STEEL SINK
FH6–3	NOTE 1,2	72" W X 31.25" D	VERTICAL 18" OPNG.	SEE LAB PLANS	DUPLEX POWER, OUTLET, GFI	PERFORATED ST. STL. PAPER SCREEN 1'–6"W X 10"D INTEGRAL EPOXY SINK DEDICATED ACID RESISTANT DIRECT EXHAUST– REFER TO MECHANICAL
FH6–ADA	NOTE 1	72" W X 31.25" D	COMBINATION	SEE LAB PLANS	DUPLEX POWER, OUTLET, GFI	PERFORATED ST. STL. PAPER SCREEN ADA COMPLIANT FUME HOOD
FH6–ADA–SS	ST. STL.	72" W X 31.25" D	COMBINATION	SEE LAB PLANS	DUPLEX POWER, OUTLET, GFI	PERFORATED ST. STL. PAPER SCREEN ADA COMPLIANT FUME HOOD 26"X12"X5"D INTEGRAL SS SINK
FH8–1	NOTE 1	96" W X 31.25" D	VERTICAL 18" OPNG.	SEE LAB PLANS	DUPLEX POWER, OUTLET, GFI	PERFORATED ST. STL. PAPER SCREEN
FH8–1SS	ST. STL.	96" W X 31.25" D	VERTICAL 18" OPNG.	SEE LAB PLANS	DUPLEX POWER, OUTLET, GFI	INTEGRAL 72"W x 18" X 6"D SINK WITH COVER PLATES COVER PLATES: (2) 24" x 18" PERFORATED SS PLATES (3) 24" X 16" SOLID SS PLATES

NOTES:
1. WHITE POLY RESIN LINER WITH EPOXY RESIN WORK SURFACE. EPOXY RESIN COLOR TO MATCH ADJACENT COUNTERTOPS
2. CONSTANT VOLUME WITH BYPASS AND DEDICATED EXHAUST

BIOLOGICAL SAFETY CABINET SCHEDULE "BSCx–y"

MARK	TYPE	SIZE	CLASS	UTILITY SERVICES
BSC4– A2	A2 (30% VENTED, 70% RECIRCULATED)	55" W x 34" D 86.5 – 92.5" H	II	(2) PLUGGED PENETRATIONS FOR FUTURE PETCOCKS, DUPLEX POWER OUTLETS MOUNTED OUTSIDE OF HOOD CAVITY, GFI, RATED FOR 20 AMPS EACH OUTLET. ONLY (1) IF NG NOTED ON PLANS.
BSC6– A2	A2 (30% VENTED, 70% RECIRCULATED)	55" W x 34" D 86.5 – 92.5" H	II	(2) PLUGGED PENETRATIONS FOR FUTURE PETCOCKS, DUPLEX POWER OUTLETS MOUNTED OUTSIDE OF HOOD CAVITY, GFI, RATED FOR 20 AMPS EACH OUTLET. ONLY (1) IF NG NOTED ON PLANS.

LAB MOBILE TABLE SCHEDULE "MTxy"

MARK	SIZE	CABINETS	TOP	NOTES
MT3048	30" W x 48" L	SEE PLANS	EPOXY RESIN	1,2,3
MT3060	30" W x 60" L	SEE PLANS	EPOXY RESIN	1,2,3
MT3672	36" W x 72" L	SEE PLANS	EPOXY RESIN	1,2,3
MT4072	40" W x 72" L	SEE PLANS	EPOXY RESIN	1,2,3
MT4072–SS	40" W x 72" L	SEE PLANS	ST. STL.	1,2,3

NOTES:
1. PAPER ROLL DISPENSER WHERE SHOWN ON FLOOR PLANS – AS PRDx WHERE 'x' DENOTES LENGTH
2. PROVIDE LATCHES TO PERMIT THE LOCKING OF UNITS TOGETHER.
3. SEE DETAIL 8/IL501

CART SCHEDULE

MARK	MATERIAL	NOTES
CART	ST. STL	LABORATORY CART–SPEC 116000

LAB COUNTER SCHEDULE

MATERIAL	
EPOXY RESIN	ALL LABORATORY COUNTERTOPS UNLESS OTHERWISE NOTED
MAPLE	PRT/SHOP 205C (WHERE INDICATED ON LAB PLANS BY KEYNOTE 38)
STAINLESS STEEL	ALL LAB CASEWORK AND COUNTERTOPS IN THE AUTOPSY/MORGUE SUITE WILL BE SS– STAINLESS STEEL

NOTES:
1. REFER TO ARCHITECTURAL FINISH SCHEDULE FOR COLOR OF COUNTER TOPS AND METAL CASEWORK COLOR.

LABORATORY EQUIPMENT & LABORATORY FIXTURES

EQUIP.#	EQUIPMENT ITEM	SPEC. SECTION	OWNER PROVIDED	CONTRACTOR PROVIDED	MOUNTING
ESEW1	PULL DOWN EMERGENCY SHOWER/EYEWASH	123450		X	WALL
EW	DRENCH HOSE EYEWASH	123450		X	COUNTER
F1	LAB FREEZER (–30C)	116000	X		FLOOR
F2	LAB FREEZER (UNDERCOUNTER)	116000	X		FLOOR
F3	NOT USED				
F4	LAB FREEZER (FLAMMABLE –20C)	116000	X		FLOOR
GW	LAB GLASSWARE WASHER	116000	X		FLOOR
HG	HYDROGEN GENERATOR	116000		X	COUNTER
LE1	GAS CYLINDER RACK	116000		X	FLOOR/WALL
LE1A	GAS CYLINDER WALL BRACKET	116000		X	WALL
LE2	GAS CYLINDER RACK	116000		X	FLOOR/WALL
LE3	OVERHEAD PHOTO/LIGHT TRACK	114700		X	CEILING
LE4A	NOT USED				
LE4B	ARTICULATING TASK EXHAUST	116000		X	CEILING
LE4C	ARTICULATING TASK EXHAUST	116000		X	CEILING
LE4D	ARTICULATING TASK EXHAUST (LARGE)	116000		X	CEILING/WALL
OHCA	OVERHEAD COMPRESSED AIR REEL	DIV.26		X	CEILING
OHCR–1	RECESSED OVERHEAD CORD REEL	DIV.26		X	CEILING
OHCR–2	SURFACE MOUNTED OVERHEAD CORD REEL	DIV.26		X	CEILING
R1	LAB REFRIGERATOR (4C)	116000	X		FLOOR
R2	LAB REFRIGERATOR/FREEZER (4C/–20C)	116000	X		FLOOR
R3	LAB REFRIGERATOR (UNDERCOUNTER)	116000	X		FLOOR
R4	LAB REFRIGERATOR (FLAMMABLES)	116000	X		FLOOR
R5	DORM REFRIGERATOR	116000	X		FLOOR
R6	DOUBLE SLIDING GLASS DOOR REFRIGERATOR (4C)	116000	X		FLOOR
R7	DOUBLE SLIDING SOLID DOOR REFRIGERATOR (4C)	116000	X		FLOOR
R8	EXISTING FREEZER	OFCI	X		FLOOR
WP	WATER POLISHER (KN #81)	116000		X	FLOOR

AUTOPSY/MORGUE

EQUIP. #	EQUIPMENT ITEM	SPEC. SECTION	OWNER PROVIDED	CONTRACTOR PROVIDED	MOUNTING
ME1	BACKDRAFT AUTOPSY STATION	117810		x	FLOOR
ME2A	BODY CARRIER	117810		x	FLOOR
ME2B	STAINLESS STEEL BODY TRAY	117810		x	CARRIER
ME2C	PLASTIC BODY TRAY	117810		x	CARRIER
ME3	BARIATRIC BODY CARRIER WITH ATTACHED SS TRAY	117810		x	FLOOR
ME4	BODY RACKING SYSTEM	117810		x	FLOOR
ME5	RECESSED BODY SCALES W/ DIGITAL READOUT	117810		x	FLOOR/WALL
ME6	FUTURE EVIDENCE DRYING CABINET (DUCTED EXHAUST)	117810	x		FLOOR
ME7	MAIN BODY COOLER	138080		x	FLOOR/ROOF
ME8	DECOMP BODY COOLER	138080		x	FLOOR/ROOF
ME9	DECOMP BODY FREEZER	138080		x	FLOOR/ROOF
ME10	BODY LIFT (RELOCATED)	EXISTING	OFCI		HOIST BEAM
ME11	EVIDENCE DRYING CABINET	NIC	x		FLOOR
ME12	INCUBATOR	NIC	x		COUNTER
ME13	WASHER EXTRACTOR	NIC	x		FLOOR
ME14	COMMERCIAL DRYER	NIC	x		STACKED
ME15	TISSUE PROCESSOR	NIC	x		FLOOR
ME16	EMBEDDING CENTER	NIC	x		COUNTER
ME17	MICROTOME	NIC	x		COUNTER
ME18	DRYING OVEN	NIC	x		COUNTER
ME19	SLIDE STAINER	NIC	x		COUNTER
ME20	SLIDE COVERSLIPPER	NIC	x		COUNTER
ME21	NOT USED				
ME22	NOT USED				
ME23	NOT USED				
ME24	DENTAL X–RAY	NIC	x		WALL
ME25	LODOX STATSCAN	NIC	x		FLOOR/WALL
ME26	NOT USED				
ME27	NOT USED				
ME28	DOCUMENT CAMERA	NIC	x		CEILING
ME29	BODY FORK LIFT	117810		x	FLOOR

FIREARMS/TOOLMARKS (DPS)

EQUIP.#	EQUIPMENT ITEM	SPEC. SECTION	OWNER PROVIDED	CONTRACTOR PROVIDED	MOUNTING
FA1	COMPARISON SCOPE	NIC	x		FLOOR
FA2a	IBIS ACQUISITION/CONTROL UNITS	NIC	x		COUNTER
FA2b	IBIS DATA CONCENTRATOR STATION	NIC	x		COUNTER
FA3	BALLISTIC SAFETY CEILING	114900		x	CEILING
FA4	BALLISTIC BAFFLES	114900		x	CEILING
FA5	BALLISTIC RUBBER PANELS	114900		x	WALL
FA6	BULLET TRAP	114900		x	FLOOR
FA7	TARGET TROLLEY	114900		x	BAFFLES
FA8	PROJECTILE RECOVERY TANK	114900	x		FLOOR
FA9	DRILL PRESS	NIC	x		COUNTER
FA10	GRINDER	NIC	x		COUNTER
FA11	COPY STAND	NIC	x		COUNTER
FA12	STEREOSCOPE	NIC	x		COUNTER

CHEMISTRY/TRACE (DPS)

EQUIP.#	EQUIPMENT ITEM	SPEC. SECTION	OWNER PROVIDED	CONTRACTOR PROVIDED	MOUNTING
C1	GC–MS W/PYROLYZER	NIC	x		COUNTER
C2	GC–MS	NIC	x		COUNTER
C2A	GC–MS W/ CHEMICAL IONIZATION	NIC	x		COUNTER
C3	FTIR	NIC	x		COUNTER
C4	SEM W/ EDS	NIC	x		FLOOR
C5	MICROSPECTROPHOTOMETER	NIC	x		COUNTER
C6	LIBS SYSTEM	NIC	x		COUNTER
C7	NOT USED	NIC	x		COUNTER
C8	OVEN	NIC	x		COUNTER
C9	OVEN	NIC	x		COUNTER
C10	VACUUM OVEN	NIC	x		COUNTER

FORENSIC BIOLOGY/SEROLOGY (DPS)

EQUIP.#	EQUIPMENT ITEM	SPEC. SECTION	OWNER PROVIDED	CONTRACTOR PROVIDED	MOUNTING
B1	THERMAL CYCLER	NIC	X		COUNTER
B2	GENETIC ANALYZER (3500)	NIC	X		COUNTER
B3	REAL TIME PCR 7500	NIC	X		COUNTER
B4	EXTRACTION ROBOT (TECAN)	NIC	X		COUNTER
B5	EXTRACTION ROBOT (MAXWELL)	NIC	X		COUNTER
B6	UV CROSSLINKER	NIC	X		COUNTER
B7	AUTOCLAVE	NIC	X		COUNTER
B8	EXTRACTION WORKSTATION(BIOMEK 3000)	NIC	X		COUNTER
B9	WALK–IN FREEZER	138080		X	FLOOR/ROOF
B10	OVEN	NIC	X		COUNTER
B11	OVEN	NIC	X		COUNTER
B12	INCUBATOR	NIC	X		COUNTER
B13	CENTRIFUGE	NIC	X		COUNTER
B14	UV PASS–THRU	116000		X	WALL

ID/IMPRESSIONS (DPS)

EQUIP.#	EQUIPMENT ITEM	SPEC. SECTION	OWNER PROVIDED	CONTRACTOR PROVIDED	MOUNTING
ID1	NINHYDRIN CHAMBER	NIC	X		COUNTER
ID2	POWDER HOOD	NIC	X		FLOOR
ID3	SUPER GLUE CABINET	116000		X	COUNTER
ID4	SUPER GLUE CABINET	NIC	X		FLOOR
ID5	DRYING CHAMBER (30" W)	116000		X	FLOOR
ID6	DRYING CHAMBER (36" W)	NIC	X		FLOOR
ID7	COPY STAND	NIC	X		COUNTER
ID8	OVEN	NIC	X		COUNTER
ID9	DRYING CHAMBER (60'W)	116000		X	FLOOR

BACTERIOLOGY/PATHOGEN LAB (AG & FOOD)

EQUIP.#	EQUIPMENT ITEM	SPEC. SECTION	OWNER PROVIDED	CONTRACTOR PROVIDED	MOUNTING
BACTERIOLOGY LAB					
BA1	INCUBATOR	NIC	X		COUNTER
BA2	FLUOROPHOS/FLUOROMETER	NIC	X		COUNTER
BA3	FLUOROPHOS/HEAT BLK	NIC	X		COUNTER
BA4	INCUBATOR	NIC	X		COUNTER
BA5	SOMASCOPE	NIC	X		FLOOR
BA6	LACTOSCOPE	NIC	X		COUNTER
BA7	CRYOSCOPE	NIC	X		COUNTER
BA8	OVEN	NIC	X		COUNTER
BA9	AUTOCLAVE	NIC	X		FLOOR
BA10	HPLC (FUTURE)	NIC	X		COUNTER
BA11	ANAEROBIC CHAMBER (FUTURE)	NIC	X		COUNTER
BA12	SPECTROPHOTOMETER (FUTURE)	NIC	X		COUNTER
PATHOGEN LAB					
P1	INCUBATOR	NIC	X		COUNTER
P2	AUTOCLAVE	NIC	X		COUNTER
P3	BAX PCR	NIC	X		COUNTER
P4	STOMACHER	NIC	X		COUNTER
P5	STOMACHER	NIC	X		COUNTER

CHEMISTRY/PESTICIDES/MEAT (AG & FOOD)

EQUIP.#	EQUIPMENT ITEM	SPEC. SECTION	OWNER PROVIDED	CONTRACTOR PROVIDED	MOUNTING
PESTICIDES					
PC1	GC	NIC	X		COUNTER
PC2	GC	NIC	X		COUNTER
PC3	GC–MS	NIC	X		COUNTER
PC4	HPLC	NIC	X		COUNTER
PC5	HPLC	NIC	X		COUNTER
PC6	WATER POLISHER	NIC	X		COUNTER
PC7	FURNACE	NIC	X		COUNTER
PC8	ROTOVAP	NIC	X		COUNTER
PC9	OVEN	NIC	X		COUNTER
PC10	OVEN	NIC	X		FLOOR
PC11	TRIPLE QUAD LCMS (FUTURE)	NIC	X		COUNTER
PC12	GROUND SHAKER	NIC	X		FLOOR
PC13	SPE WORKSTATION	NIC	X		COUNTER
PC14	GC–MS W/HEADSPACE (FUTURE)	NIC	X		COUNTER
PC15	TRIPLE QUAD GC–MS (FUTURE)	NIC	X		COUNTER
PC16	ACCELERATED SOLVENT EXTRACTOR	NIC	X		COUNTER
MEAT					
MT1	KJELDAHL UNIT	NIC	X		COUNTER
MT2	OVEN	NIC	X		COUNTER
MT3	MEAT ANALYZER	NIC	X		COUNTER
MT4	BLIXER	NIC	X		COUNTER
MT5	FURNACE	NIC	X		COUNTER
CHEMISTRY					
CH1	ICP–OES	NIC	X		FLOOR
CH2	ICP–MS	NIC	X		COUNTER
CH3	WATER POLISHER	NIC	X		WALL
CH4	MICROWAVE DIGEST SYSTEM	NIC	X		COUNTER
CH5	NOT USED				
CH5a	FEED GRINDER (40" W)	NIC	X		COUNTER
CH5b	FEED GRINDER (17" W)	NIC	X		COUNTER
CH5c	FEED GRINDER	NIC	X		COUNTER
CH6	FURNACE	NIC	X		COUNTER
CH7	FAT EXTRACTOR	NIC	X		COUNTER
CH8	NOT USED				
CH9	NITROGEN ANALYZER (NEW)	NIC	X		COUNTER
CH10	SALT TITRATOR	NIC	X		COUNTER
CH11	OVEN	NIC	X		COUNTER
CH12	IC ANALYZER	NIC	X		COUNTER
CH13	EXIST. LABCONCO LAB GLASSWARE WASHER	NIC	X		FLOOR
CH14	FIBER ANALYZER– WITH WATER HEATER	NIC	X		COUNTER
CH15	OVEN	NIC	X		COUNTER
CH16	FEED ANALYZER (FUTURE)	NIC	X		COUNTER

CRIME SCENE

EQUIP.#	EQUIPMENT ITEM	SPEC. SECTION	OWNER PROVIDED	CONTRACTOR PROVIDED	MOUNTING
CS1	SUPERGLUE CABINET (CA9000D)	116000		X	FLOOR

CRSA
649 E. South Temple
Salt Lake City, UT 84102
801.355.5915

MWL
McClaren, Wilson & Lawrie, Inc.
11798 North Lakeridge Parkway
Ashland, Va 23005
(804)228.7465
www.mwlarchitects.com

State of Utah
Department of Administrative Services
Division of Facilities Construction & Management
DFCM
4110 State Office Building
Salt Lake City, Utah 84114
Phone: (801) 538 - 3018
Fax: (801) 538 - 3267

DIVISION OF FACILITIES CONSTRUCTION AND MANAGEMENT
REVIEWED FOR CODE COMPLIANCE
SIGNATURE: Enzo Calfa
DATE: 08-05-2014

STATUS Not For Construction

ARCHITECT-ENGINEER STAMP

KEY PLAN

Project #: B13-024

DATE:	REVISION:
APRIL 21, 2014	BID SET
CHECKED BY	B.CARVER
DRAWN BY	B.WARREN / A.VIG

LAB SCHEDULES

IL001

VOLUME 1

LABORATORY CASEWORK LEGEND

ACDx	ACID STORAGE CABINET - EXHAUSTED (x DENOTES CABINET WIDTH)
AFF	ABOVE FINISHED FLOOR
BCDx	BASE STORAGE CABINET-EXHAUSTED (x DENOTES CABINET WIDTH)
BSCx-y	BIOLOGICAL SAFETY CABINET (x DENOTES HOOD WIDTH, y DENOTES TYPE REFER TO BIOLOCICAL SAFETY CABINET SCHEDULE)
Bx-ySS	SUSPENDED - ALL STAINLESS STEEL CONSTRUCTION
Bx-y	BASE FIXED FLOOR MOUNTED CABINETRY (x DENOTES CABINET WIDTH, y DENOTES CABINET TYPE)
CA	COMPRESSED AIR (MEDICAL GRADE COMPRESSED AIR FITTING)
CART	ST. STL. LAB CART - SPEC 116000
CPUx-y	FIXED, FLOOR MOUNTED OPEN COMPUTER CABINET (x DENOTES WIDTH, y DENOTES CABINET TYPE)
CS	CUP SINK
CSCx	FLAMMABLE CHEMICAL STORAGE CABINET (x DENOTES CABINET WIDTH)
CT	COUNTERTOP
CW	COLD WATER
DBx-y	BASE FIXED DRAWER. FLOOR MOUNTED (x DENOTES CABINET WIDTH & y DENOTES CABINET TYPE)
DBx-ySS	SUSPENDED - ALL STAINLESS STEEL CONSTRUCTION
DI	DE-IONIZED WATER
ELx-y	EVIDENCE LOCKER (x DENOTES CABINET WIDTHy DENOTES CABINET TYPE)
ER	EPOXY RESIN
ESEW1	FLOOR MOUNTED COMBINATION EMERGENCY EYEWASH & SHOWER UNIT - ADA COMPLIANT
ESEW2	RECESSED, SWING DOWN COMBINATION EMERGENCY EYEWASH & SHOWER UNIT
EW	ADA COMPLIANT DRENCH HOSE EYEWASH FIXTURE - DECK MOUNTED
FHx-y	FUME HOOD (x DENOTES HOOD WIDTH, y DENOTES TYPE REFER TO FH SCHEDULE LOCATED ON SHEET IL001)
H5	HYDROGEN FITTING (99.999% PURITY)
HE5	HELIUM FITTING (99.999% PURITY)
HCW	HOT & COLD WATER
HW	HOT WATER
KB/MT	KEYBOARD WITH SLIDING MOUSE TRAY
KSx	KNEE SPACE(x DENOTED WIDTH)
KS-SS	SAME AS KS, BUT ALL STAINLESS STEEL CONSTRUCTION
KSDx	KNEE SPACE W/ DRAWER AND STANDARD APRON, (x DENOTES WIDTH)
KSDx-SS	SAME AS KSDx , BUT ALL STAINLESS STEEL CONSTRUCTION
KSSF	KNEE SPACE SUPPORT FRAME
L	LOCKING CABINET
LA5	LAB AIR FITTING (SCRUBBED MEDICAL GRADE COMPRESSED AIR -99.999% PURITY)
LS-x	LAB SINK (x DENOTES SINK TYPE. REFER T O LAB SINK SCHEDULE)
MCX-y	MOBILE CABINET (x DENOTES WIDTH & y DENOTES CABINET TYPE)
MTxxyy	MOBILE TABLE (xx INDICATES WIDTH & yy INDICATES LENGTH) (REFER TO DETAIL 8/IL101)
MGU	MOBILE GUN UNIT
MTCx-y	MOBILE TABLE CABINET (x DENOTES WIDTH AND y DENOTES TYPE)
N5	NITROGEN FITTING (99.999% PURITY)
NG	NATURAL GAS FITTING
OHCA	SURFACE MOUNTED OVERHEAD COMPRESSED AIR REEL - DIV. 22
OHCR-1	RECESSED MOUNTED OVERHEAD CORD REEL
OHCR-2	SURFACE MOUNTED OVERHEAD CORD REEL
OHPT	OVERHEAD PHOTOGRAPHY/LIGHT TRACK-REFER TO SECTION 114700
Px	DECK MOUNTED MULTIPLEX PEDESTAL OUTLET x=NUMBER OF OUTLETS IN HOUSING
PRDx	PAPER ROLL DISPENSER (x DENOTES WIDTH)
PRT	PROJECTILE RECOVERY TANK
PTD	PAPER TOWEL DISPENSER (SURFACE MOUNTED)
PWB	PULLOUT WRITING BOARD
RSx	WALL SHELF W/ ROLLOUT SHELVING (x DENOTES CABINET WIDTH)
SBx	SINK BASE FIXED FLOOR MOUNTED CABINETRY (x DENOTES CABINET WIDTH)
SBx-SS	SAME AS SB-x EXCEPT ALL STAINLESS STEEL CONSTRUCTION
SBx-ADA	SINK BASE FIXED FLOOR MOUNTED CABINETRY (x DENOTES CABINET WIDTH) ADA COMPLIANT
SP	SPARE
ST.STL or SS	STAINLESS STEEL
TABxxyy	TABLE (xx INDICATES WIDTH & yy INDICATES LENGTH)
TCx-y	TALL CABINET (x DENOTES CABINET WIDTH; y DENOTES CABINET TYPE)
TCx-ySS	SAME AS TCx-y, EXCEPT ALL STAINLESS STEEL CONSTRUCTION
TSx-y	TALL SHELF (x DENOTES CABINET WIDTH; y DENOTES CABINET TYPE)
TSx-ySS	SAME AS TSx-y, EXCEPT ALL STAINLESS STEEL CONSTRUCTION
TYPE1	TYPE I PURIFIED WATER LOCATION (WATER POLISHER BY DIV. 22), 18 MEGAOHM
TYPE III	TYPE III PURIFIED WATER LOCATION (PURIFIED WATER POLISHER BY DIV. 22), 1 MEGAOHM
UNO	UNLESS NOTED OTHERWISE
WSR-x	WALL SHELF W/ ROLLOUT SHELVING (x DENOTES CABINET WIDTH)
WCx-y	WALL CABINET (x DENOTES CABINET WIDTH, y DENOTES CABINET TYPE)
WCx-ySS	SAME AS WCx-y, EXCEPT ALL STAINLESS STEEL CONSTRUCTION
WSx-y	WALL SHELF (x DENOTES CABINET WIDTH; y DENOTES CABINET TYPE)
WSx-ySS	SAME AS WSx-y, EXCEPT ALL STAINLESS STEEL CONSTRUCTION
(X1)	EQUIPMENT NUMBER
◇	SPECIAL COUNTER HEIGHT (IF DIFFERENT THAN 36")
○—	ULTRA HIGH PURITY GAS FITTING (SINGLE HEAD)

LABORATORY CASEWORK GENERAL NOTES

1. CABINETS & COUNTERS
   - A. ALL SINKS SHALL BE CENTERED IN THEIR CABINETS UNLESS OTHERWISE SHOWN ON DRAWINGS.
   - B. PROVIDE REMOVABLE BACK ACCESS PANELS AT ALL CABINETS AND KNEE SPACES TO PROVIDE ACCESSIBILITY TO UTILITY CHASES BEHIND CABINETS.
   - C. CASEWORK MANUFACTURER AND INSTALLER SHALL PREPARE ALL LAB CASEWORK FOR SPECIAL APPLICATIONS, SUCH AS PRE DRILLING FOR INSTALLATION OF HANDS FREE DEVICES, CUTS IN BACKSPLASH AND COUNTERS FOR EXHAUST GRILLES, TUBING FROM DUCT PENETRATIONS, TASK/EXHAUST UNITS, PURIFIED WATER COMPONENTS, WIRING, ETC.
   - D. ALL LABORATORY COUNTERTOPS AND BACKSPLASHES SHALL BE EPOXY RESIN, EXCEPT WHERE INDICATED OTHERWISE. COLOR SHALL BE SELECTED BY ARCHITECT FROM MANUFACTURERS STANDARD LINE OF COLORS. ALL BACKSPLASHES SHALL MATCH COUNTERTOPS IN MATERIAL AND COLOR. BACK SPLASHES SHALL EXTEND UP TO THE UNDERSIDE OF THE COMPARTMENT RACEWAY.
   - E. ALL COUNTERTOP HEIGHTS SHALL BE 36" AFF UNLESS OTHERWISE NOTED.
   - F. ALL REAGENT LEDGES SHALL MATCH ADJACENT COUNTER TOPS.
   - G. PROVIDE REMOVABLE CLOSURE PANELS AT ENDS OF UTILITY CHASES AT KNEE SPACES, PENINSULAS, ISLANDS, ETC. EXCEPT WHERE NOTED OTHERWISE.
   - H. ALL SINGLE FIXED COUNTERTOPS AT FIXED CASEWORK ARE 30" DEEP UNLESS NOTED OTHERWISE.
   - I. PROVIDE HANGING FILE HARDWARE AT ALL FILE CABINETS.
   - J. PROVIDE LOCK HARDWARE ALL DRAWERS AND DOORS WHERE INDICATED ON LAB PLANS.
   - K. PROVIDE SEISMIC LIPS ON ALL OPEN SHELVING, REAGENT LEDGES, BOOKSHELVES, ETC.
   - L. ALL KNEE SPACES AND WORK U'S SHALL BE CONSTRUCTED WITHOUT VERTICAL LEGS TO ENSURE FULL USE OF THE KNEE SPACES. CONSTRUCT THIS CASEWORK WITH SPANNING APRON PANELS WHICH EITHER SPAN FROM CABINET TO CABINET, CABINETRY TO WALL OR WALL TO WALL. PROVIDE BRACE UNDER COUNTER AS REQUIRED TO SUPPORT COUNTER SYSTEMS. IN NO CASE WILL THE BRACE SUPPORT BE PERMITTED WITHIN 14" OF THE LEADING EDGE OF THE COUNTER.
   - M. CABINET DOOR WIDTHS: SINGLE WIDTH DOORS LESS THEN 48" IN HEIGHT, SHALL NOT EXCEED 24". ALL 24" WIDTH DOORS SHALL BE 1" THICK CONSTRUCTION.
2. COORDINATION
   - A. ALL DIMENSIONS ARE NOMINAL. SPECIFIC DIMENSIONS MAY VARY AMONG DIFFERENT CASEWORK MANUFACTURERS.
   - B. ALL DIMENSIONS ARE TYPICAL UNLESS OTHERWISE NOTED ON DRAWINGS.
   - C. VERIFY ALL DIMENSIONS IN FIELD BEFORE CASEWORK SHOP DRAWING PROCESS BEGINS.
   - D. REFER TO DIVISION 22 & PLUMBING DRAWINGS FOR ENTIRE PURIFIED WATER SYSTEM. DIVISION 123450 SHALL FURNISH THE PURIFIED WATER FITTINGS IN ORIGINAL UNOPENED PACKAGES FOR INSTALLATION BY PURIFIED WATER CONTRACTOR. COMPONENTS PROVIDED BY DIVISION 22.
3. FLOOR TO CABINET TRANSITIONS, EXCEPT WHERE NOTED OTHERWISE
   - A. PROVIDE VINYL BASE AT TOE SPACE AT ALL FIXED CASEWORK.
   - B. CONTRACTOR SHALL PROVIDE SUITABLE PROTECTION OF ALL FINISHED FLOORING WORK.
   - C. PROVIDE BLOCKING AS REQUIRED FOR SUPPORT OF BASE, WHERE GAP BETWEEN FLOOR AND CABINET IS MORE THAN 3/4".
4. CABINET TO WALL TRANSITIONS
   - A. PROVIDE CONTINUOUS BLOCKING AT ALL WALL LOCATIONS WHERE THERE IS LAB CASEWORK AND ANY AND ALL WALL MOUNTED ACCESSORIES, INCLUDING WALL MOUNTED EQUIPMENT BY OTHERS.
   - B. PROVIDE SURFACE MOUNTED PAPER TOWEL DISPENSERS AT ALL LAB SINKS. LOCATE ALL EPOXY DRYING RACKS TO AVOID CONFLICT WITH DECK MOUNTED EYE WASH UNITS.
5. FUME HOODS
   - A. AT FUME HOODS NOT SCHEDULED TO RECEIVE BASE CABINETS, SUPPORT HOOD WITH MANUFACTURERS STANDARD 2" X 2" TUBULAR STEEL TABLE.
   - B. FUME HOOD AND BIOLOGICAL SAFETY CABINET MANUFACTURERS SHALL ADVISE WHAT SPECIAL STRUCTURE IS REQUIRED, CONCEALED IN WALLS, FOR SEISMIC ANCHORAGE OF FUME HOODS AND BIOLOGICAL SAFETY CABINETS, PER PREVAILING CODES.
   - C. ADA FUME HOODS SHALL BE ADA COMPLIANT IN APRON DEPTH, AND MOUNTING HEIGHT.
   - D. ALL FUME HOODS SHALL HAVE A PERFORATED SCREEN AT THE BACK BAFFLE AREA. REFER TO THE FUME HOOD SPECIFICATION.
6. SIGNAGE
   - A. PROVIDE AND INSTALL ALL NECESSARY AND REQUIRED SIGNAGE TO IDENTIFY AND LOCATE EMERGENCY EYEWASH AND SHOWER UNITS AS REQUIRED BY THE FEDERAL OCCUPATIONAL SAFETY AND HEALTH ADMINISTRATION.
   - B. SOLVENT STORAGE AND ACID CABINETS: PROVIDE LABEL IN ACCORDANCE WITH SPECIFICATIONS "FLAMMABLE KEEP AWAY" AND "ACID STORAGE".
7. CABINET LOCKS
   - A. ALL CABINET LOCKS INDICATED (L)
8. SINK SERVICES
   - A. REFER TO SINK SCHEDULE ON SHEET IL001 FOR ALL SINK TYPES & THEIR SERVICES. REFER TO LAB PLANS FOR LOCATIONS OF SINK TYPES.
9. FUME HOOD SERVICES
   - A. REFER TO FUME HOOD SCHEDULE ON SHEET IL001 FOR ALL FUME HOOD TYPES & THEIR SERVICES. REFER TO LAB PLANS FOR LOCATIONS OF FUME HOOD TYPES.

CRSA
649 E. South Temple
Salt Lake City, UT 84102
801.355.5915

MWL
McClaren, Wilson & Lawrie, Inc.
11798 North Lakeridge Parkway
Ashland, Va 23005
(804)228.7465
www.mwlarchitects.com

State of Utah
Department of Administrative Services
DFCM
Division of Facilities Construction & Management
4110 State Office Building
Salt Lake City, Utah 84114
Phone: (801) 538 - 3018
Fax: (801) 538 - 3267

DIVISION OF FACILITIES CONSTRUCTION AND MANAGEMENT
REVIEWED FOR CODE COMPLIANCE
SIGNATURE: Ernie Gelfe
DATE: 08-05-2014

STATUS
Not For Construction

ARCHITECT-ENGINEER STAMP

KEY PLAN

Project #: B13-024

DATE:	REVISION:
APRIL 21, 2014	BID SET
CHECKED BY	B.CARVER
DRAWN BY	B.WARREN / A.VIG

LAB CASEWORK LEGEND & GENERAL NOTES

IL002

VOLUME 1

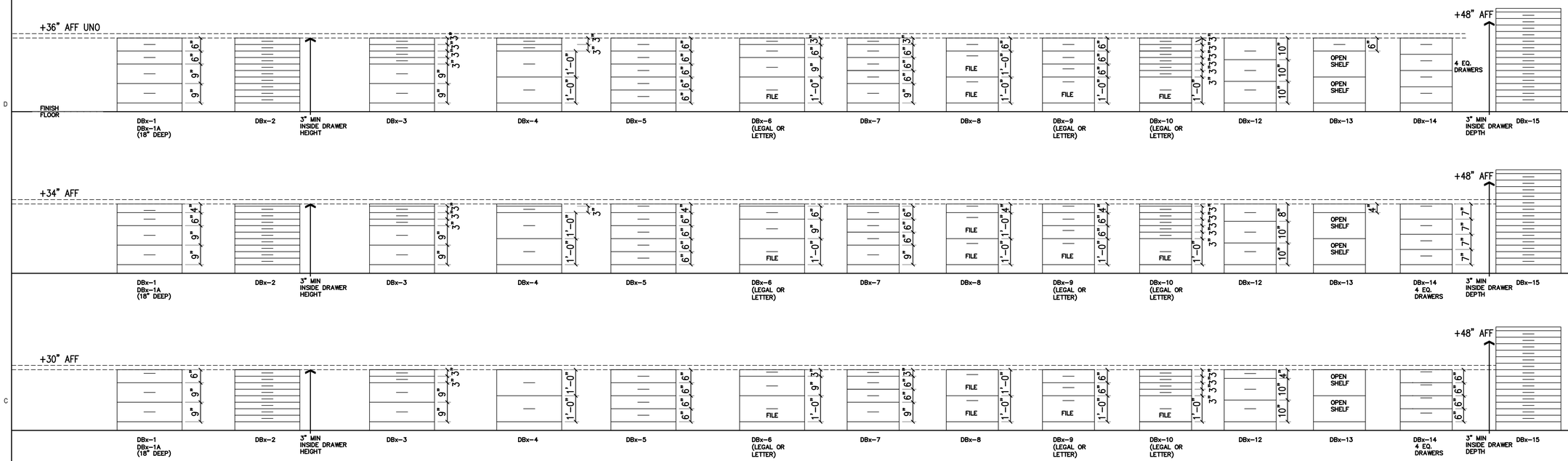

DRAWER BASE CABINETS

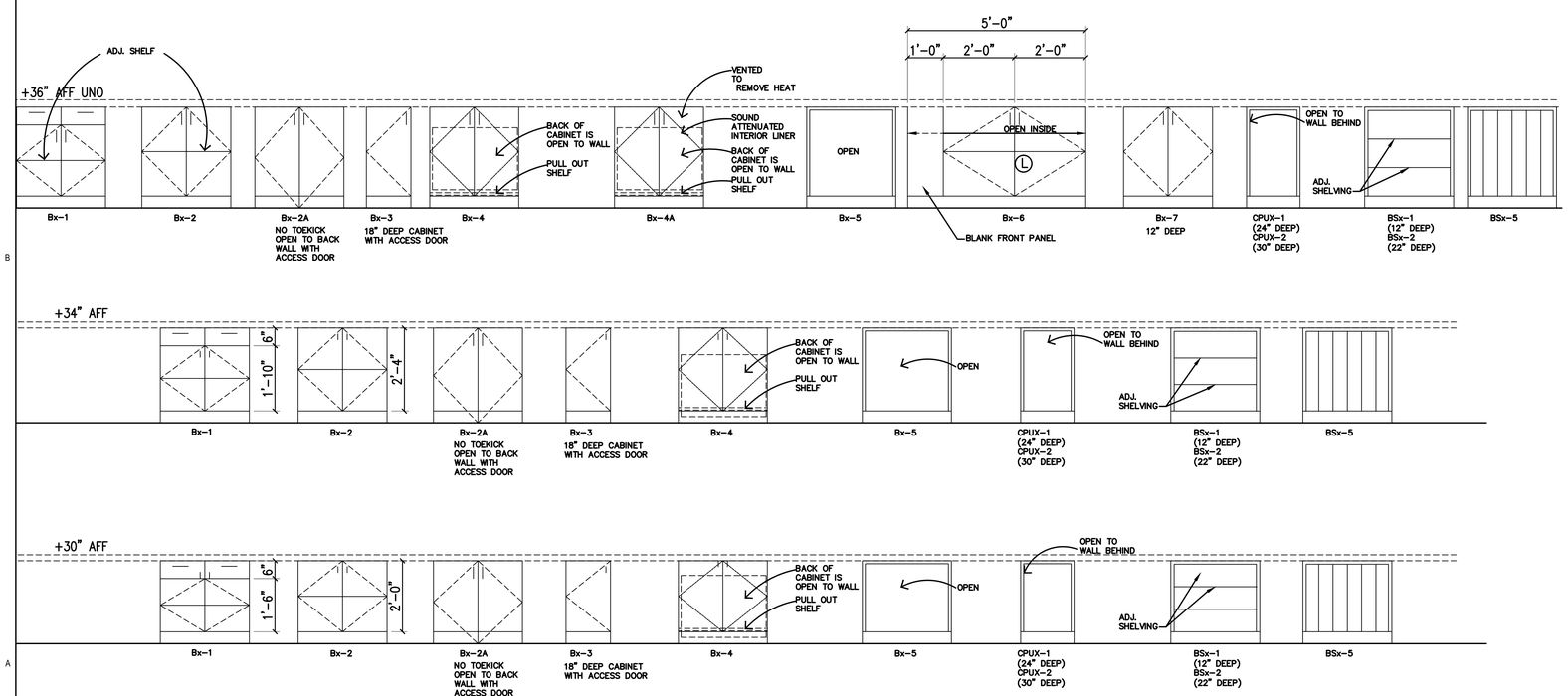

BASE CABINETS

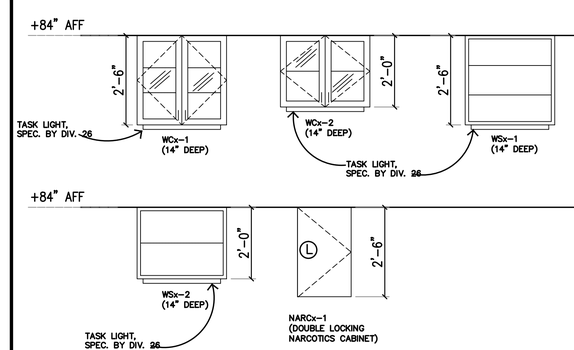

UPPER CABINETS

NOTES:

1. NOT ALL CASEWORK TYPES DEPICTED ON THIS SHEET MAY BE USED ON THIS PROJECT.
2. REFER TO LAB PLAN SHEETS FOR CASEWORK TYPE LOCATIONS.

CRSA
649 E. South Temple
Salt Lake City, UT 84102
801.355.5915

MWL
McClaren, Wilson & Lawrie, Inc.
11798 North Lakeridge Parkway
Ashland, Va 23005
(804)228.7465
www.mwlarchitects.com

State of Utah
Department of Administrative Services
Division of Facilities Construction & Management
4110 State Office Building
Salt Lake City, Utah 84114
Phone: (801) 538 - 3018
Fax: (801) 538 - 3267

DIVISION OF FACILITIES CONSTRUCTION AND MANAGEMENT
REVIEWED FOR CODE COMPLIANCE
SIGNATURE: Ernie Gelfe
DATE: 08-05-2014

STATUS
Not For Construction

ARCHITECT-ENGINEER STAMP

KEY PLAN

Project #: B13-024

DATE:	REVISION:
APRIL 21, 2014	BID SET
CHECKED BY	B.CARVER
DRAWN BY	B.WARREN / A.VIG

LAB CASEWORK ELEVATIONS

IL003

VOLUME 1

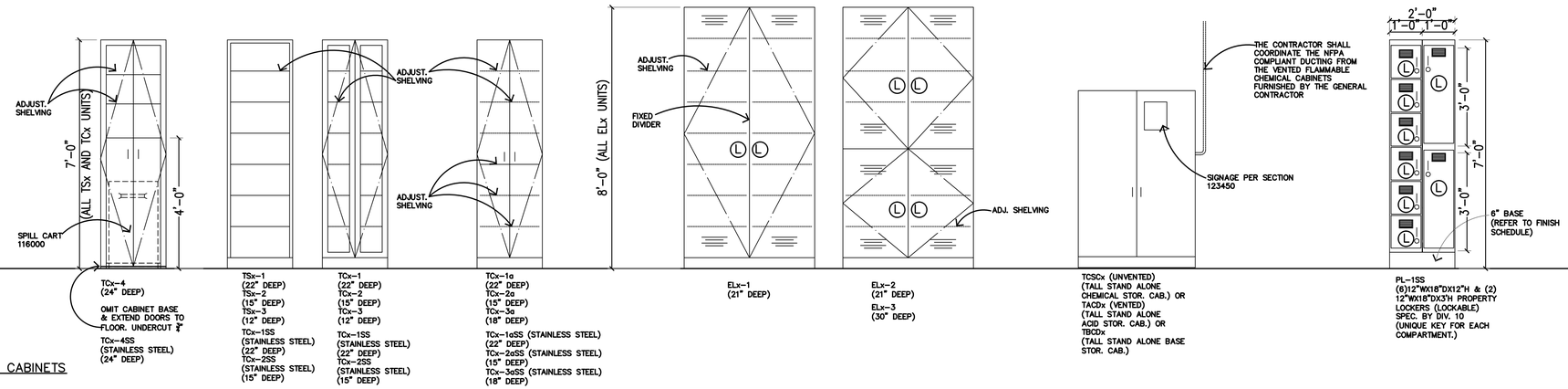

TALL CABINETS

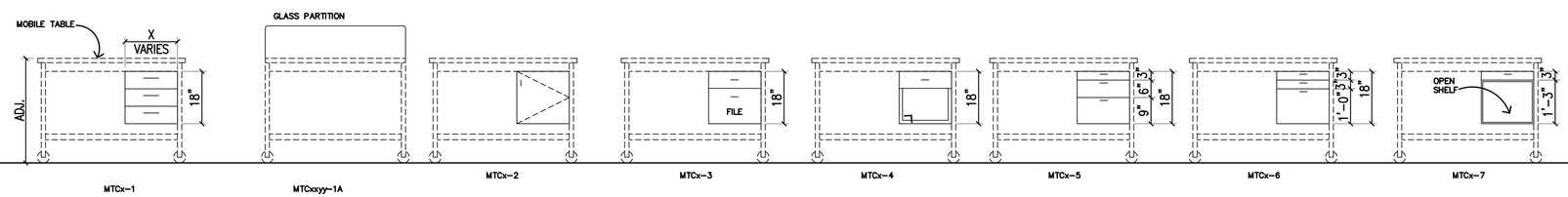

MCx-y NOTES:
24" HIGH @ 30" COUNTER
28" HIGH @ 34" OR 36" COUNTER

MOBILE CABINETS

* ALL MOBILE TABLE CABINETS STAINLESS STEEL IN AUTOPSY SUITE (MTCx-? & MCx-?)

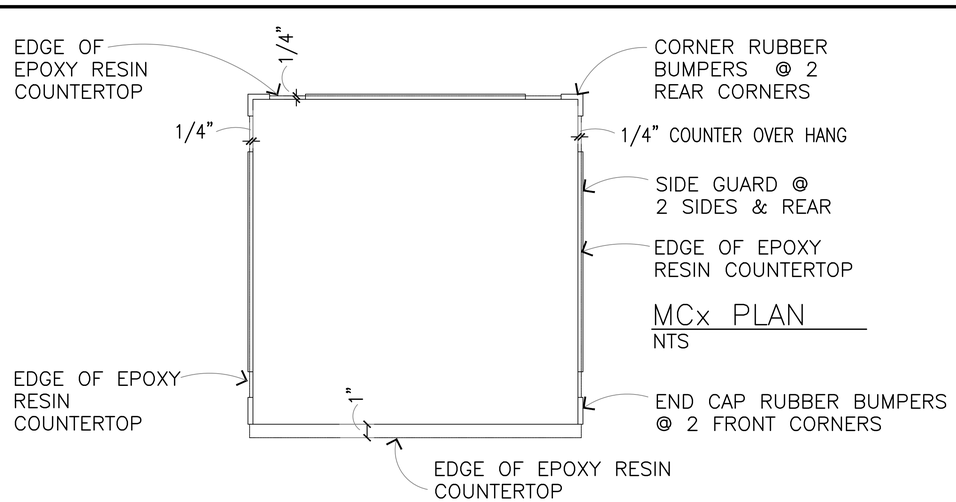

MCx PLAN
NTS

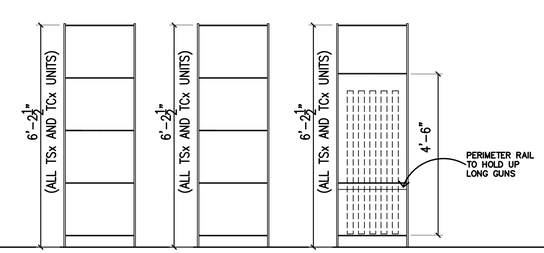

SHx-1 STANDARD WIRE SHELVING (1'-6" DEEP)
SHx-4 (2'-0" DEEP)
SHx-5 (2'-6" DEEP)
SHx-2 STANDARD SOLID SHELVING (1'-6" DEEP)
SHx-3 STANDARD WIRE SHELVING WITH LONG GUN STOP (1'-6" DEEP)

SHELVING

NOTES:

1. NOT ALL CASEWORK TYPES DEPICTED ON THIS SHEET MAY BE USED ON THIS PROJECT.
2. REFER TO LAB PLAN SHEETS FOR CASEWORK TYPE LOCATIONS.

CRSA
649 E. South Temple
Salt Lake City, UT 84102
801.355.5915

MWL
McClaren, Wilson & Lawrie, Inc.
11798 North Lakeridge Parkway
Ashland, Va 23005
(804)228.7465
www.mwlarchitects.com

State of Utah
Department of Administrative Services
DFCM
Division of Facilities Construction & Management
4110 State Office Building
Salt Lake City, Utah 84114
Phone: (801) 538 - 3018
Fax: (801) 538 - 3267

DIVISION OF FACILITIES CONSTRUCTION AND MANAGEMENT
REVIEWED FOR CODE COMPLIANCE
SIGNATURE: Ernie Gelfi
DATE: 08-05-2014

STATUS
Not For Construction

ARCHITECT-ENGINEER STAMP

KEY PLAN

Project #: B13-024

DATE:	REVISION:
APRIL 21, 2014	BID SET
CHECKED BY	B.CARVER
DRAWN BY	B.WARREN / A.VIG

LAB CASEWORK ELEVATIONS

IL004

VOLUME 1

KNEESPACE DRAWER SCHEDULE:	
KNEESPACE WIDTH	NO. OF DRAWERS
30"–49"	1
50"–72"	2

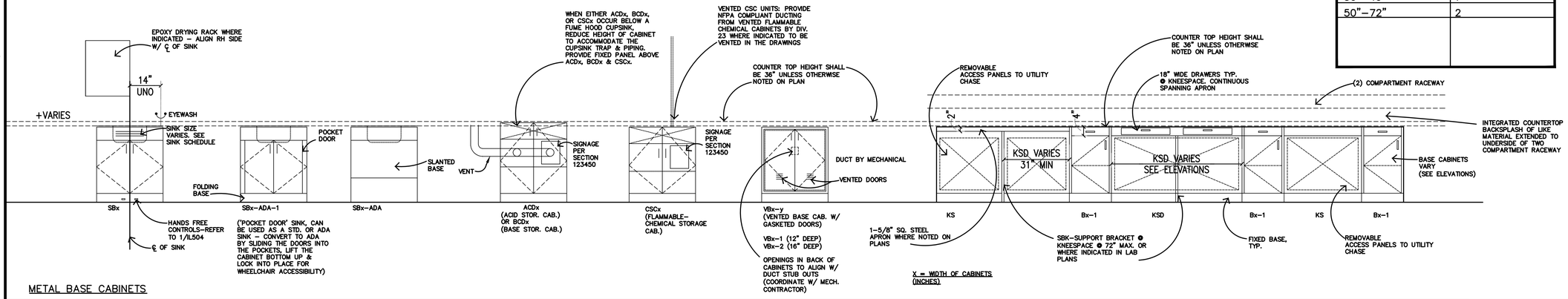

METAL BASE CABINETS

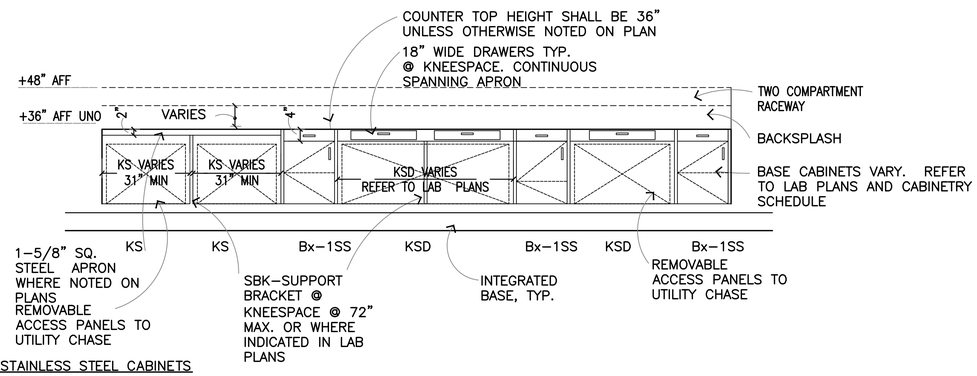

SUSPENDED STAINLESS STEEL CABINETS

KNEESPACE DRAWER SCHEDULE:	
KNEESPACE WIDTH	NO. OF DRAWERS
30"–49"	1
50"–72"	2

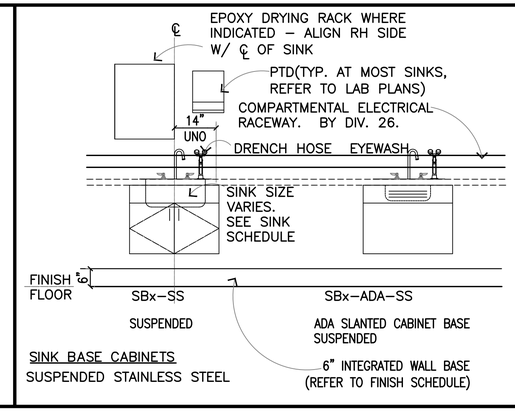

SINK BASE CABINETS

SUSPENDED STAINLESS STEEL

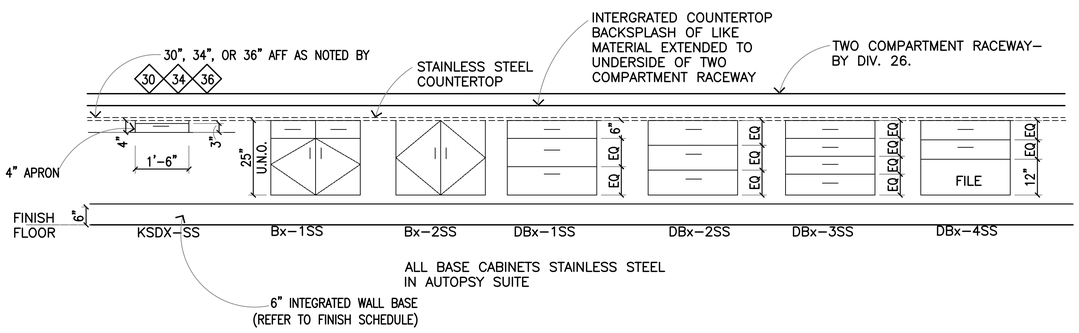

SUSPENDED STAINLESS STEEL BASE CABINETS

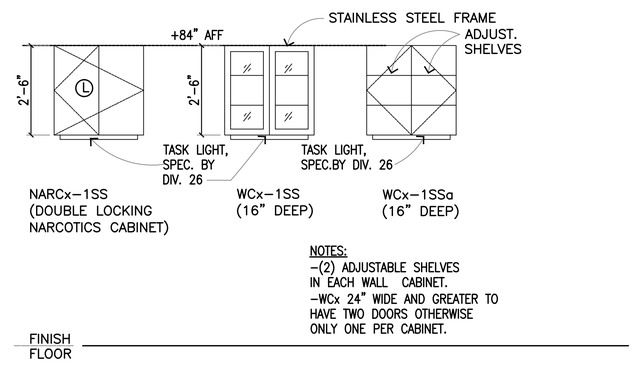

STAINLESS STEEL WALL CABINETS

CRSA
649 E. South Temple
Salt Lake City, UT 84102
801.355.5915

MWL
McClaren, Wilson & Lawrie, Inc.
11798 North Lakeridge Parkway
Ashland, Va 23005
(804)228.7465
www.mwlarchitects.com

State of Utah
Department of Administrative Services
Division of Facilities Construction & Management
4110 State Office Building
Salt Lake City, Utah 84114
Phone: (801) 538 - 3018
Fax: (801) 538 - 3267

DIVISION OF FACILITIES CONSTRUCTION AND MANAGEMENT
REVIEWED FOR CODE COMPLIANCE
SIGNATURE: Ernie Gelfe
DATE: 08-05-2014

STATUS
Not For Construction

ARCHITECT-ENGINEER STAMP

KEY PLAN

Project #: B13-024

DATE:	REVISION:
APRIL 21, 2014	BID SET
CHECKED BY	B.CARVER
DRAWN BY	B.WARREN / A.VIG

LAB CASEWORK ELEVATIONS

IL005

VOLUME 1

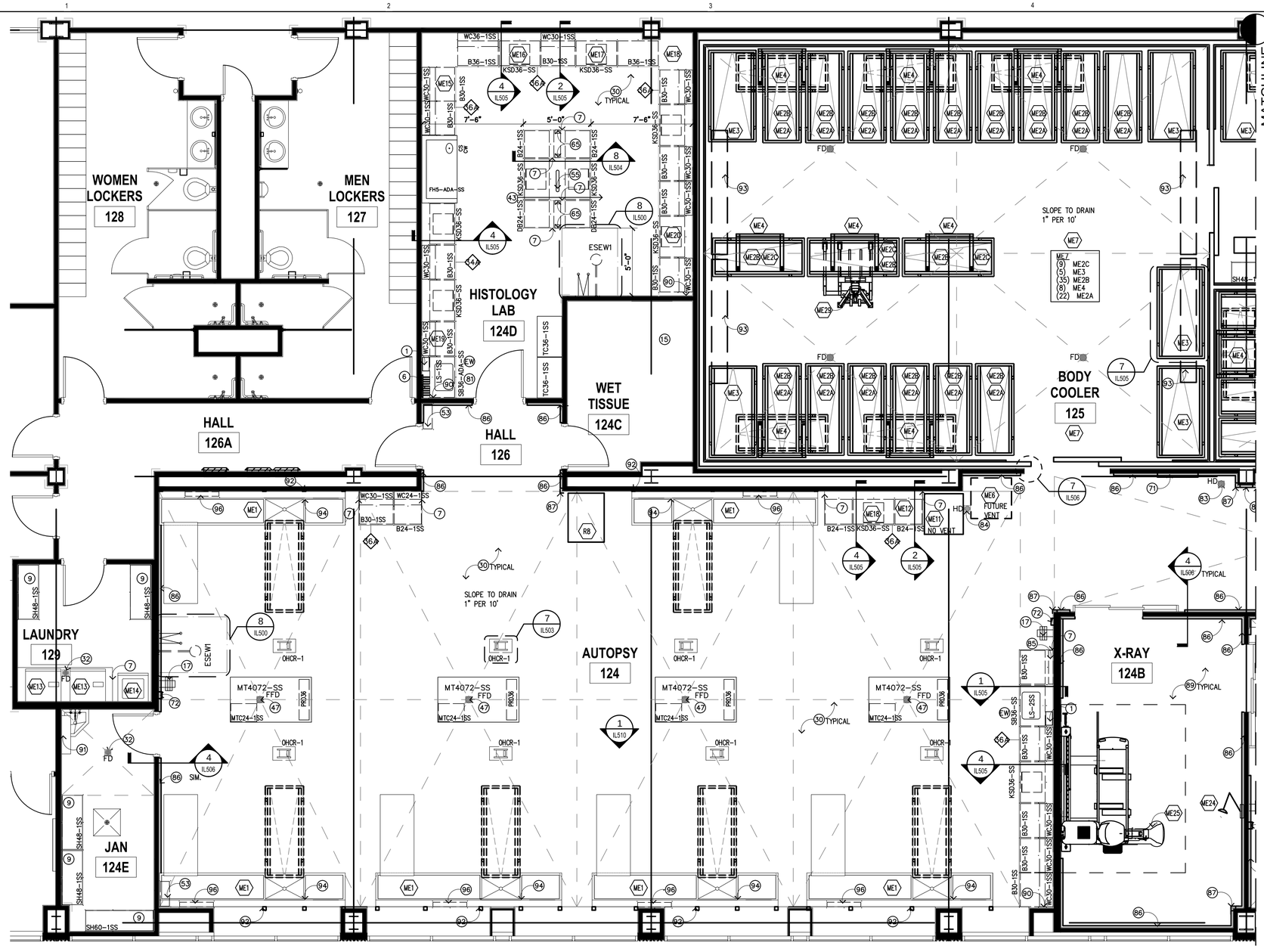

KEY SYMBOLS

- (L) LOCKING
- (M) MONITOR TO BMS
- (EW) DECK MOUNTED DRENCH HOSE EYEWASH FIXTURE
- (CA) COMPRESSED AIR
- (XX) MARINE EDGE COUNTER ELEVATION IN INCHES
- (XX) NON-MARINE EDGE COUNTER ELEVATION IN INCHES
- (X) KEY NOTES
- (XX) EQUIPMENT
- XXX ROOM NUMBERS

ABBREVIATIONS

BFF	BELOW FINISHED FLOOR
HD	HUB DRAIN
FD	FLOOR DRAIN
FFD	FLUSHABLE FLOOR DRAIN
SS	STAINLESS STEEL

KEY NOTES

1. PAPER TOWEL DISPENSER– SPEC. 116000
2. COAT HOOKS MOUNTED @54" AFF–SPEC 116000
3. SAFETY SUPPLY CABINET–SPEC 116000
4. INLET PORT FOR HYDROGEN GENERATOR
5. OPEN TO FINISH WALL SURFACE
6. EPOXY DRYING RACK – 18"x36" – SPEC 123450
7. FILLER PANEL – MATCH CASEWORK MATERIAL
8. OMIT FRONT AND BACK APRON FOR 34" HIGH UNDER COUNTER EQUIPMENT.
9. SS SHELVING–SPEC 116000
10. 2 1/2" CORD GROMMET–SPEC 123450
11. CONTROL PANEL FOR FA7 (TARGET TROLLEY)
12. 2'X4' STAINLESS STEEL FOLD DOWN SURFACE – REFER TO DETAIL 8/IL507
13. COUNTERTOP MOUNTED COMPRESSED AIR (CA) TURRET
14. COLD WATER HOSE BIB @54" AFF– BY DIV. 22
15. HIGH DENSITY SHELVING– BY DIV. 10
16. KSSF SUPPORT FRAME– REFER TO DETAIL 9/IL500
17. HOT & COLD MIXING STATION–BY DIV. 22 (W/ 30' OF HOSE)
18. MOBILE LIFT PARK
19. UTILITY SINK– BY DIV. 22
20. UNDER COUNTER KNEE WALL SUPPORT –REFER TO ARCHITECTURAL
21. SPILL CART–SPEC 116000
22. SUPPORT LEG–BY DIV. 12
23. COAT RACK & SHELF–SPEC 116000
24. WALL MOUNTED PAPER ROLL DISPENSER WITH PLASTIC LAMINATE COVERED PLYWOOD BACKBOARD. 36"HX12"H MOUNTED AT 48" AFF TO BOTTOM.
25. DOUBLE KSSF– REFER TO DETAIL 1/IL509
26. ELEVATION TRANSITION POINT
27. MILLWORK–BY DIV. 6
28. FORMALIN SPIGOT
29. UNDERCOUNTER TYPE I WATER POLISHER–BY DIV. 22
30. ALL STAINLESS STEEL CASEWORK IN AUTOPSY SUITES WILL HAVE MARINE EDGE COUNTER TOPS.
31. GAS MANIFOLD @66" A.F.F. (BOTTOM) –BY DIV. 22
32. FLOOR DRAIN– BY DIV. 22
33. DISSECTION TABLE SHELF BY MFR
34. STAINLESS STEEL SCRUB SINK– BY DIV. 22
35. LEVEL 4 BULLET RESISTANT DOOR/FRAME–SPEC 083950
36. 'IN USE' LIGHT–DETAIL–1/IL507–BY DIV. 26
37. PUMP CONTROL FOR FORMALIN DISPENSOR
38. MAPLE COUNTER–2" THICK W/ 3/4" X 3 1/2" MAPLE BACK SPLASH W/ 4" LEADING EDGE OVERHANG– SPEC 123450
39. 8" DIA. EXHAUST DUCT FROM PROJECTILE RECOVERY TANK. DIV. 23 TO CONNECT EXHAUST
40. MOBILE DISSECTING WING–SPEC 117810
41. WALL MOUNTED LONG GUN RACK – REFER TO 3/IL508
42. PAINTED 3" NUMBER AND ARROW WHITE PAINT STENCILED ON RUBBER PANELS AT 1 YARD INCREMENTS MEASURED FROM THE ZERO POINT OF THE FIRING LINE. ACCURACY REQUIRED WITHIN 1/16".– REFER TO 3/IL507
43. OPEN ALL OF THE WAY THROUGH
44. GAS ANNUNCIATOR PANEL– BY DIV. 22
45. FORMALIN CONTAINER AND DISPENSING PUMP
46. PAINTED FIRING LINE– REFER TO DETAIL 3/IL507
47. FLUSHING FLOOR DRAIN–BY DIV. 22
48. CONTROLS FOR RANGE AIR HANDLING SYSTEM– DIV. 23
49. 36"L X 12" W X 1" THICK MAPLE WOOD SHELF MOUNT & 48" AFF–SPEC 123450
50. CW CONNECTION @ 48" A.F.F.–REFER TO PLUMB. VERIFY LOCATION BASED ON APPROVED SHOP DRAWINGS OF PRT
51. MANUAL OPERATED BLACKOUT SHADE–SPEC 122413
52. LOW ELEVATION EXHAUST– REFER TO MECHANICAL
53. BUG ZAPPER MOUNTED @ +84" A.F.F.–BY DIV 26 –SPEC 116000
54. HAMPER– NIC
55. 2-1/2" X 18" CORD SLOT
56. EXHAUST VENTS BY DISSECTING STATION MFR. (VERIFY 8"X24") –COORDINATE DUCTWORK WITH DIV. 23
57. ACID VENT PIPE– REFER TO DETAIL 2/IL500 AND MECHANICAL
58. ADJUSTABLE TOOL RACK–SPEC 114900 REFER TO DETAIL 4/IL507
59. 12"X12"X12" FLOOR SINK–BY DIV. 22
60. PRESSURE DIFFERENTIAL INDICATOR @ 54" AFF– BY DIV. 23
61. LEVEL 4 BULLET RESISTANT WINDOW & FRAME– SPEC 085653
62. DIRECT CONNECT EXHAUST– BY DIV. 23
63. DIGITAL READOUT FOR SCALE–SPEC 117810
64. ACID VENT DUCT– REFER TO TACDx ELEVATION ON IL004– BY DIV. 23
65. BELOW COUNTER RECEPTACLE RECESSED INTO SERVICE CLOSURE PANEL– REFER TO ELECTRICAL DRAWINGS.
66. TRENCH DRAIN– BY DIV. 22
67. USER CONTROLLED AIR FLOW SWITCH–BY DIV. 23
68. BULLET TRAP/RANGE SIGN MOUNTED AT 60" AFF TO BOTTOM–SPEC. 114900
69. PRT SIGN MOUNTED AT 60" AFF TO BOTTOM. –SPEC. 114900
70. WALL MOUNTED FLAT PANEL MONITOR–BY DIV. 27
71. COOLER CONTROL PANEL
72. IN-WALL FLUSH VALVE FOR FLUSHING FLOOR DRAINS – BY DIV. 22
73. EXISTING AMMO STORAGE SHELVING SYSTEM TO BE RELOCATED TO NEW FACILITY BY CONTRACTOR
74. BACKDRAFT EXHAUST GRILLE– BY DIV. 23 REFER TO MECH. FOR SIZE, MOUNT ABOVE COUNTERTOP BACKSPLASH
75. ADA COMPLIANT S.S. SINK–BY DIV. 22
76. REMOVABLE EVIDENCE RACK MOUNTED TO MOBILE TABLE–REFER TO DETAIL A8/IL501–SPEC 123450
77. UMBILICAL SERVICE CHASE–SPEC 123450
78. DIRECT CONNECT PRT TO CW
79. COMPRESSED AIR– BY DIV. 23
80. TYPE 3 RO WATER FAUCET– COUNTER MOUNTED
81. TYPE 1 DI WATER POLISHER– WALL MOUNTED
82. GLASS WALL PANEL–REFER TO ARCH.
83. HUB DRAIN FOR BODY FREEZER CONDENSATE BY DIV. 22
84. HUB DRAIN– BY DIV. 22
85. MONITOR AND INTERCOM TO OUTSIDE PEDESTAL – BY DIV. 26
86. S.S. WALL GUARD – REFER TO DET. 9/IL506. IN ROOMS 125, 125A AND 125B S.S. WALL GUARDS ARE TO BE BY COOLER MFR.
87. S.S. CORNER GUARD – REFER TO DET. 9/IL505
88. ADJUSTABLE DOCK LIGHT– BY DIV. 26
89. X-RAY ROOM TO BE R.F. SHIELDED PER QUALIFIED PHYSICIST CONSULTANT PRIOR TO CONSTRUCTION.
90. INTEGRAL COUNTERTOP SIDE SPLASH
91. MOP AND BROOM HOLDER RACK–SPEC. 116000
92. STEEL STRUCTURE TO SUPPORT DISSECTING STATION –BY STRUCTURAL ENGINEER
93. APPROXIMATE LOCATION OF EVAPORATING UNITS IN COLD ROOMS MOUNTED NEAR CEILING
94. SCALE POLE BRACKET–SPEC 117810
95. SPRAY HOSE ASSEMBLY – SPEC. 117800
96. MONITOR MOUNTED ON ARTICULATING SWIVEL ARM BRACKET–BY DIV. 27
97. HYDRO ASPIRATOR – SPEC. 117810
98. STUB FOR FUTURE DIRECT EXHAUST AND SNORKEL CONNECTION– BY DIV. 23
99. 3' H X 4' W MARKER BOARD–SPEC. 101100
100. ARTICULATING MARKER BOARD–SPEC 116000
101. S.S. SHELF – 12"L x 10"D
102. S.S. SHELF – 11"D, PROVIDE HOLE IN SHELF FOR SCALE POST AND ALIGN WITH SCALE POST BRACKET
103. MATCHING BACK DRAFT WALL VENTS SUPPLIED BY DISSECTION TABLE MFR SPEC 117810 – DIV. 23 WILL CONNECT THE EXHAUST.
104. 6" INTEGRAL WALL BASE– REFER TO FINISH SCHEDULE
105. INSTRUMENT DRAWER
106. DISPOSAL SWITCH
107. GFCI OUTLET W/ WEATHERPROOF COVER
108. 2 HP DISPOSAL– SPEC. 117810
109. END RINSE CONTROL VALVE
110. HW & CW MIXING FAUCET
111. EXHAUST VENTS BY DISSECTING STATION MFR. (8"X30") –COORDINATE DUCTWORK WITH DIV. 23
112. PASS THROUGH CABINET WITH VISION DOORS SPEC 116000– REFER TO DETAIL 2/IL508
113. ABOVE COUNTER RECEPTACLE RECESSED INTO SERVICE CLOSURE PANEL OR CHASE– REFER TO ELECTRICAL DRAWINGS.
114. STAINLESS STEEL CANOPY–BY DIV. 23
115. CURTAIN AND TRACK– BY DIV. 10
116. MARBLE TABLE – SPEC. 116000
117. TASK LIGHT– BY DIV. 26
118. LIQUID NITROGEN DEWAR, NIC
119. 1" DIA. HOLE W/CAP FOR DI WATER DELIVERY DEVICE.
120. (2) PADLOCK RACK MOUNTED ON WALL @54" AFF AND 48" AFF
121. EXHAUST VENTS TO BE HAVE OPPOSED BLADE DAMPER ACCESSIBLE THROUGH THE FACE OF THE GRILL FOR AIR BALANCING –BY DISSECTING TABLE MFR
122. POWER FROM BELOW– BY DIV. 26

CRSA
649 E. South Temple
Salt Lake City, UT 84102
801.355.5915

MWL
McClaren, Wilson & Lawrie, Inc.
11798 North Lakeridge Parkway
Ashland, Va 23005
(804)228.7465
www.mwlarchitects.com

State of Utah
Department of Administrative Services
Division of Facilities Construction & Management
4110 State Office Building
Salt Lake City, Utah 84114
Phone: (801) 538 - 3018
Fax: (801) 538 - 3267

DIVISION OF FACILITIES CONSTRUCTION AND MANAGEMENT
REVIEWED FOR CODE COMPLIANCE
SIGNATURE: Ernie Gelfe
DATE: 08-05-2014

STATUS
Not For Construction

ARCHITECT-ENGINEER STAMP

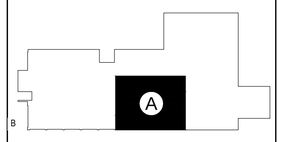

KEY PLAN

Project #: B13-024

DATE:	REVISION:
APRIL 21, 2014	BID SET

CHECKED BY	B.CARVER
DRAWN BY	B.WARREN / A.VIG

1ST FLOOR ENLARGED LAB PLANS

IL100

VOLUME 1

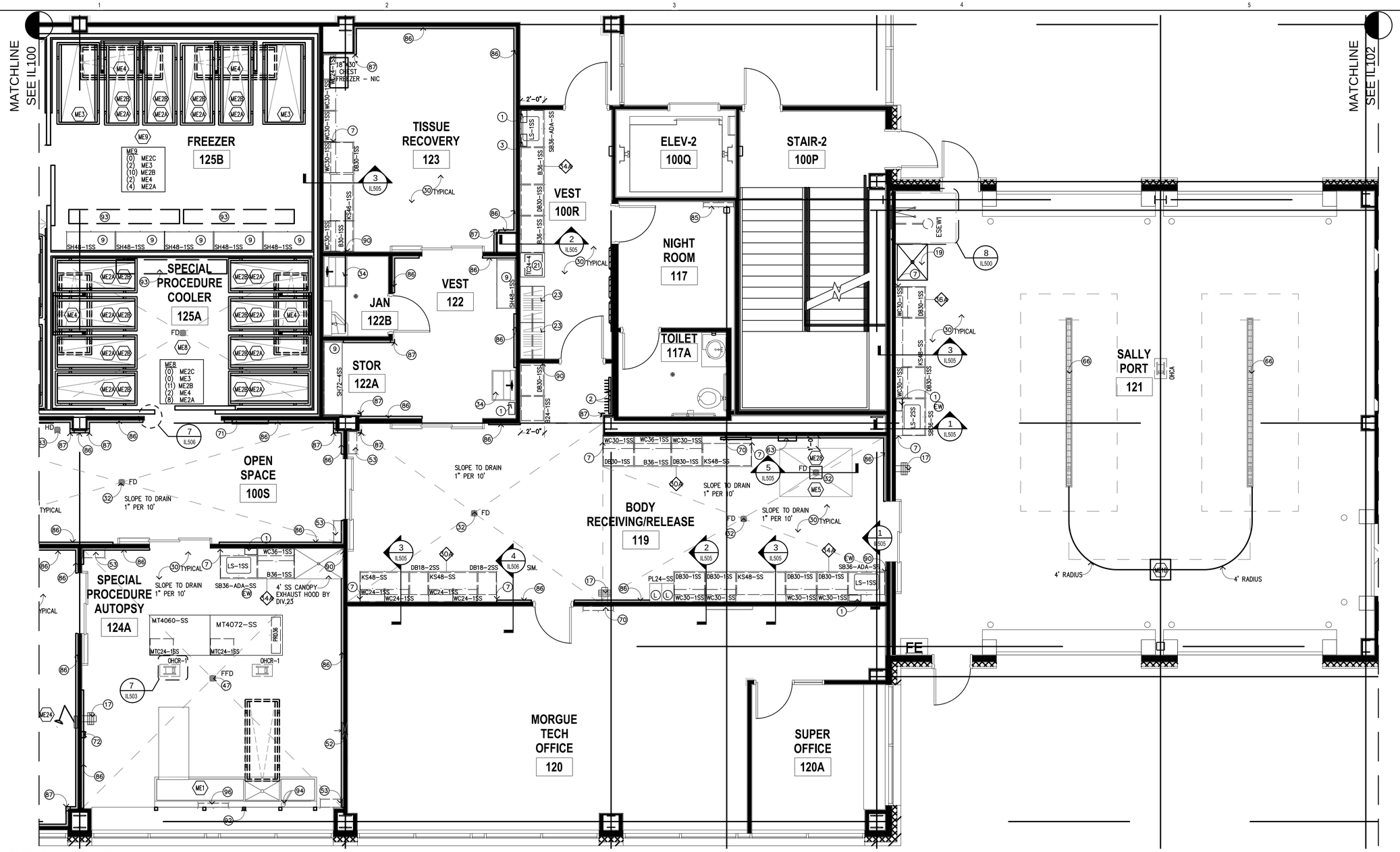

KEY SYMBOLS

- (L) LOCKING
- (M) MONITOR TO BMS
- (EW) DECK MOUNTED DRENCH HOSE EYEWASH FIXTURE
- (CA) COMPRESSED AIR
- XXX MARINE EDGE COUNTER ELEVATION IN INCHES
- XX NON-MARINE EDGE COUNTER ELEVATION IN INCHES
- (X) KEY NOTES
- XX EQUIPMENT
- XXX ROOM NUMBERS

ABBREVIATIONS

BFF	BELOW FINISHED FLOOR
HD	HUB DRAIN
FD	FLOOR DRAIN
FFD	FLUSHABLE FLOOR DRAIN
SS	STAINLESS STEEL

KEY NOTES

1. PAPER TOWEL DISPENSER– SPEC. 116000
2. COAT HOOKS MOUNTED @54" AFF–SPEC 116000
3. SAFETY SUPPLY CABINET–SPEC 116000
4. INLET PORT FOR HYDROGEN GENERATOR
5. OPEN TO FINISH WALL SURFACE
6. EPOXY DRYING RACK – 18"x36" – SPEC 123450
7. FILLER PANEL – MATCH CASEWORK MATERIAL
8. OMIT FRONT AND BACK APRON FOR 34" HIGH UNDER COUNTER EQUIPMENT.
9. SS SHELVING–SPEC 116000
10. 2 1/2" CORD GROMMET–SPEC 123450
11. CONTROL PANEL FOR FA7 (TARGET TROLLEY)
12. 2"X4' STAINLESS STEEL FOLD DOWN SURFACE – REFER TO DETAIL 8/IL507
13. COUNTERTOP MOUNTED COMPRESSED AIR (CA) TURRET
14. COLD WATER HOSE BIB @54" AFF– BY DIV. 22
15. HIGH DENSITY SHELVING– BY DIV. 10
16. KSSF SUPPORT FRAME– REFER TO DETAIL 9/IL500
17. HOT & COLD MIXING STATION–BY DIV. 22 (W/ 30' OF HOSE)
18. MOBILE LIFT PARK
19. UTILITY SINK– BY DIV. 22
20. UNDER COUNTER KNEE WALL SUPPORT –REFER TO ARCHITECTURAL
21. SPILL CART–SPEC 116000
22. SUPPORT LEG–BY DIV. 12
23. COAT RACK & SHELF–SPEC 116000
24. WALL MOUNTED PAPER ROLL DISPENSER WITH PLASTIC LAMINATE COVERED PLYWOOD BACKBOARD. 36"HX12"H MOUNTED AT 48" AFF TO BOTTOM.
25. DOUBLE KSSF– REFER TO DETAIL 1/IL509
26. ELEVATION TRANSITION POINT
27. MILLWORK–BY DIV. 6
28. FORMALIN SPIGOT
29. UNDERCOUNTER TYPE I WATER POLISHER–BY DIV. 22
30. ALL STAINLESS STEEL CASEWORK IN AUTOPSY SUITES WILL HAVE MARINE EDGE COUNTER TOPS.
31. GAS MANIFOLD @66" A.F.F. (BOTTOM) –BY DIV. 22
32. FLOOR DRAIN– BY DIV. 22
33. DISSECTION TABLE SHELF BY MFR
34. STAINLESS STEEL SCRUB SINK– BY DIV. 22
35. LEVEL 4 BULLET RESISTANT DOOR/FRAME–SPEC 083950
36. 'IN USE' LIGHT–DETAIL–1/IL507–BY DIV. 26
37. PUMP CONTROL FOR FORMALIN DISPENSOR
38. MAPLE COUNTER–2" THICK W/ 3/4" X 3 1/2" MAPLE BACK SPLASH W/ 4" LEADING EDGE OVERHANG– SPEC 123450
39. 8" DIA. EXHAUST DUCT FROM PROJECTILE RECOVERY TANK. DIV. 23 TO CONNECT EXHAUST
40. MOBILE DISSECTING WING–SPEC 117810
41. WALL MOUNTED LONG GUN RACK – REFER TO 3/IL508
42. PAINTED 3" NUMBER AND ARROW WHITE PAINT STENCILED ON RUBBER PANELS AT 1 YARD INCREMENTS MEASURED FROM THE ZERO POINT OF THE FIRING LINE. ACCURACY REQUIRED WITHIN 1/16".– REFER TO 3/IL507
43. OPEN ALL OF THE WAY THROUGH
44. GAS ANNUNCIATOR PANEL– BY DIV. 22
45. FORMALIN CONTAINER AND DISPENSING PUMP
46. PAINTED FIRING LINE– REFER TO DETAIL 3/IL507
47. FLUSHING FLOOR DRAIN–BY DIV. 22
48. CONTROLS FOR RANGE AIR HANDLING SYSTEM– DIV. 23
49. 36"L X 12" W X 1" THICK MAPLE WOOD SHELF MOUNT & 48" AFF–SPEC 123450
50. CW CONNECTION @ 48" A.F.F.–REFER TO PLUMB. VERIFY LOCATION BASED ON APPROVED SHOP DRAWINGS OF PRT
51. MANUAL OPERATED BLACKOUT SHADE–SPEC 122413
52. LOW ELEVATION EXHAUST– REFER TO MECHANICAL
53. BUG ZAPPER MOUNTED @ +84" A.F.F.–BY DIV 26 –SPEC 116000
54. HAMPER– NIC
55. 2–1/2" X 18" CORD SLOT
56. EXHAUST VENTS BY DISSECTING STATION MFR. (VERIFY 8"X24") –COORDINATE DUCTWORK WITH DIV. 23
57. ACID VENT PIPE– REFER TO DETAIL 2/IL500 AND MECHANICAL
58. ADJUSTABLE TOOL RACK–SPEC 114900 REFER TO DETAIL 4/IL507
59. 12"X12"X12" FLOOR SINK–BY DIV. 22
60. PRESSURE DIFFERENTIAL INDICATOR @ 54" AFF– BY DIV. 23
61. LEVEL 4 BULLET RESISTANT WINDOW & FRAME– SPEC 085653
62. DIRECT CONNECT EXHAUST– BY DIV. 23
63. DIGITAL READOUT FOR SCALE–SPEC 117810
64. ACID VENT DUCT– REFER TO TACDx ELEVATION ON IL004– BY DIV. 23
65. BELOW COUNTER RECEPTACLE RECESSED INTO SERVICE CLOSURE PANEL– REFER TO ELECTRICAL DRAWINGS.
66. TRENCH DRAIN– BY DIV. 22
67. USER CONTROLLED AIR FLOW SWITCH–BY DIV. 23
68. BULLET TRAP/RANGE SIGN MOUNTED AT 60" AFF TO BOTTOM–SPEC. 114900
69. PRT SIGN MOUNTED AT 60" AFF TO BOTTOM. –SPEC. 114900
70. WALL MOUNTED FLAT PANEL MONITOR–BY DIV. 27
71. COOLER CONTROL PANEL
72. IN–WALL FLUSH VALVE FOR FLUSHING FLOOR DRAINS – BY DIV. 22
73. EXISTING AMMO STORAGE SHELVING SYSTEM TO BE RELOCATED TO NEW FACILITY BY CONTRACTOR
74. BACKDRAFT EXHAUST GRILLE– BY DIV. 23 REFER TO MECH. FOR SIZE, MOUNT ABOVE COUNTERTOP BACKSPLASH
75. ADA COMPLIANT S.S. SINK–BY DIV. 22
76. REMOVABLE EVIDENCE RACK MOUNTED TO MOBILE TABLE–REFER TO DETAIL A8/IL501–SPEC 123450
77. UMBILICAL SERVICE CHASE–SPEC 123450
78. DIRECT CONNECT PRT TO CW
79. COMPRESSED AIR– BY DIV. 23
80. TYPE 3 RO WATER FAUCET– COUNTER MOUNTED
81. TYPE 1 DI WATER POLISHER– WALL MOUNTED
82. GLASS WALL PANEL–REFER TO ARCH.
83. HUB DRAIN FOR BODY FREEZER CONDENSATE BY DIV. 22
84. HUB DRAIN– BY DIV. 22
85. MONITOR AND INTERCOM TO OUTSIDE PEDESTAL – BY DIV. 26
86. S.S. WALL GUARD – REFER TO DET. 9/IL506. IN ROOMS 125, 125A AND 125B S.S. WALL GUARDS ARE TO BE BY COOLER MFR.
87. S.S. CORNER GUARD – REFER TO DET. 9/IL505
88. ADJUSTABLE DOCK LIGHT– BY DIV. 26
89. X–RAY ROOM TO BE R.F. SHIELDED PER QUALIFIED PHYSICIST CONSULTANT PRIOR TO CONSTRUCTION.
90. INTEGRAL COUNTERTOP SIDE SPLASH
91. MOP AND BROOM HOLDER RACK–SPEC. 116000
92. STEEL STRUCTURE TO SUPPORT DISSECTING STATION –BY STRUCTURAL ENGINEER
93. APPROXIMATE LOCATION OF EVAPORATING UNITS IN COLD ROOMS MOUNTED NEAR CEILING
94. SCALE POLE BRACKET–SPEC 117810
95. SPRAY HOSE ASSEMBLY – SPEC. 117800
96. MONITOR MOUNTED ON ARTICULATING SWIVEL ARM BRACKET–BY DIV. 27
97. HYDRO ASPIRATOR – SPEC. 117810
98. STUB FOR FUTURE DIRECT EXHAUST AND SNORKEL CONNECTION– BY DIV. 23
99. 3' H X 4' W MARKER BOARD–SPEC. 101100
00. ARTICULATING MARKER BOARD–SPEC 116000
01. S.S. SHELF – 12"L x 10"D
02. S.S. SHELF – 11"D, PROVIDE HOLE IN SHELF FOR SCALE POST AND ALIGN WITH SCALE POST BRACKET
03. MATCHING BACK DRAFT WALL VENTS SUPPLIED BY DISSECTION TABLE MFR SPEC 117810 – DIV. 23 WILL CONNECT THE EXHAUST.
04. 6" INTEGRAL WALL BASE– REFER TO FINISH SCHEDULE
05. INSTRUMENT DRAWER
06. DISPOSAL SWITCH
07. GFCI OUTLET W/ WEATHERPROOF COVER
08. 2 HP DISPOSAL– SPEC. 117810
09. END RINSE CONTROL VALVE
10. HW & CW MIXING FAUCET
11. EXHAUST VENTS BY DISSECTING STATION MFR. (8"X30") –COORDINATE DUCTWORK WITH DIV. 23
12. PASS THROUGH CABINET WITH VISION DOORS SPEC 116000– REFER TO DETAIL 2/IL508
13. ABOVE COUNTER RECEPTACLE RECESSED INTO SERVICE CLOSURE PANEL OR CHASE– REFER TO ELECTRICAL DRAWINGS.
14. STAINLESS STEEL CANOPY–BY DIV. 23
15. CURTAIN AND TRACK– BY DIV. 10
16. MARBLE TABLE – SPEC. 116000
17. TASK LIGHT– BY DIV. 26
18. LIQUID NITROGEN DEWAR, NIC
19. 1" DIA. HOLE W/CAP FOR DI WATER DELIVERY DEVICE.
20. (2) PADLOCK RACK MOUNTED ON WALL @54" AFF AND 48" AFF
21. EXHAUST VENTS TO BE HAVE OPPOSED BLADE DAMPER ACCESSIBLE TROUGH THE FACE OF THE GRILL FOR AIR BALANCING –BY DISSECTING TABLE MFR
22. POWER FROM BELOW– BY DIV. 26

CRSA
649 E. South Temple
Salt Lake City, UT 84102
801.355.5915

MWL
McClaren, Wilson & Lawrie, Inc.
11798 North Lakeridge Parkway
Ashland, Va 23005
(804)228.7465
www.mwlarchitects.com

State of Utah
Department of Administrative Services
Division of Facilities Construction & Management
4110 State Office Building
Salt Lake City, Utah 84114
Phone: (801) 538 - 3018
Fax: (801) 538 - 3267

DIVISION OF FACILITIES CONSTRUCTION AND MANAGEMENT
REVIEWED FOR CODE COMPLIANCE
SIGNATURE:
DATE: 08-05-2014

STATUS
Not For Construction

ARCHITECT-ENGINEER STAMP

KEY PLAN

Project #: B13-024

DATE:	REVISION:
APRIL 21, 2014	BID SET
CHECKED BY	B.CARVER
DRAWN BY	B.WARREN / A.VIG

1ST FLOOR ENLARGED LAB PLANS

IL101

VOLUME 1

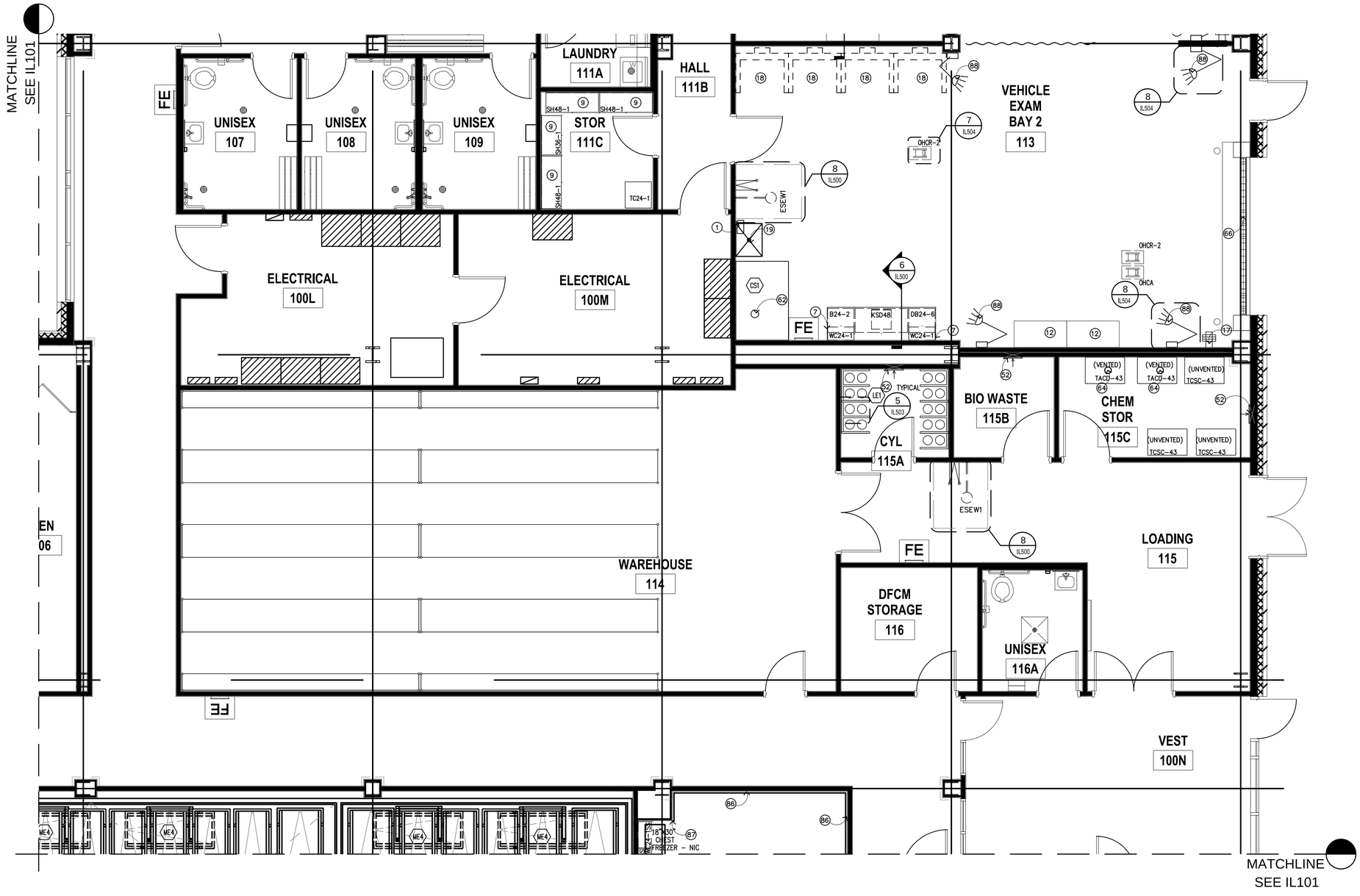

KEY SYMBOLS

- (L) LOCKING
- (M) MONITOR TO BMS
- (EW) DECK MOUNTED DRENCH HOSE EYEWASH FIXTURE
- (CA) COMPRESSED AIR
- (XXX) MARINE EDGE COUNTER ELEVATION IN INCHES
- (XX) NON-MARINE EDGE COUNTER ELEVATION IN INCHES
- (X) KEY NOTES
- (XX) EQUIPMENT
- XXX ROOM NUMBERS

ABBREVIATIONS

BFF	BELOW FINISHED FLOOR
HD	HUB DRAIN
FD	FLOOR DRAIN
FFD	FLUSHABLE FLOOR DRAIN
SS	STAINLESS STEEL

KEY NOTES

1. PAPER TOWEL DISPENSER– SPEC. 116000
2. COAT HOOKS MOUNTED @54" AFF–SPEC 116000
3. SAFETY SUPPLY CABINET–SPEC 116000
4. INLET PORT FOR HYDROGEN GENERATOR
5. OPEN TO FINISH WALL SURFACE
6. EPOXY DRYING RACK – 18"x36" – SPEC 123450
7. FILLER PANEL – MATCH CASEWORK MATERIAL
8. OMIT FRONT AND BACK APRON FOR 34" HIGH UNDER COUNTER EQUIPMENT.
9. SS SHELVING–SPEC 116000
10. 2 1/2" CORD GROMMET–SPEC 123450
11. CONTROL PANEL FOR FA7 (TARGET TROLLEY)
12. 2"X4" STAINLESS STEEL FOLD DOWN SURFACE – REFER TO DETAIL 8/IL507
13. COUNTERTOP MOUNTED COMPRESSED AIR (CA) TURRET
14. COLD WATER HOSE BIB @54" AFF– BY DIV. 22
15. HIGH DENSITY SHELVING– BY DIV. 10
16. KSSF SUPPORT FRAME– REFER TO DETAIL 9/IL500
17. HOT & COLD MIXING STATION–BY DIV. 22 (W/ 30' OF HOSE)
18. MOBILE LIFT PARK
19. UTILITY SINK– BY DIV. 22
20. UNDER COUNTER KNEE WALL SUPPORT –REFER TO ARCHITECTURAL
21. SPILL CART–SPEC 116000
22. SUPPORT LEG–BY DIV. 12
23. COAT RACK & SHELF–SPEC 116000
24. WALL MOUNTED PAPER ROLL DISPENSER WITH PLASTIC LAMINATE COVERED PLYWOOD BACKBOARD. 36"HX12"H MOUNTED AT 48" AFF TO BOTTOM.
25. DOUBLE KSSF– REFER TO DETAIL 1/IL509
26. ELEVATION TRANSITION POINT
27. MILLWORK–BY DIV. 6
28. FORMALIN SPIGOT
29. UNDERCOUNTER TYPE I WATER POLISHER–BY DIV. 22
30. ALL STAINLESS STEEL CASEWORK IN AUTOPSY SUITES WILL HAVE MARINE EDGE COUNTER TOPS.
31. GAS MANIFOLD @66" A.F.F. (BOTTOM) –BY DIV. 22
32. FLOOR DRAIN– BY DIV. 22
33. DISSECTION TABLE SHELF BY MFR
34. STAINLESS STEEL SCRUB SINK– BY DIV. 22
35. LEVEL 4 BULLET RESISTANT DOOR/FRAME–SPEC 083950
36. 'IN USE' LIGHT–DETAIL–1/IL507–BY DIV. 26
37. PUMP CONTROL FOR FORMALIN DISPENSOR
38. MAPLE COUNTER–2" THICK W/ 3/4" X 3 1/2" MAPLE BACK SPLASH W/ 4" LEADING EDGE OVERHANG– SPEC 123450
39. 8" DIA. EXHAUST DUCT FROM PROJECTILE RECOVERY TANK. DIV. 23 TO CONNECT EXHAUST
40. MOBILE DISSECTING WING–SPEC 117810
41. WALL MOUNTED LONG GUN RACK – REFER TO 3/IL508
42. PAINTED 3" NUMBER AND ARROW WHITE PAINT STENCILED ON RUBBER PANELS AT 1 YARD INCREMENTS MEASURED FROM THE ZERO POINT OF THE FIRING LINE. ACCURACY REQUIRED WITHIN 1/16".– REFER TO 3/IL507
43. OPEN ALL OF THE WAY THROUGH
44. GAS ANNUNCIATOR PANEL– BY DIV. 22
45. FORMALIN CONTAINER AND DISPENSING PUMP
46. PAINTED FIRING LINE– REFER TO DETAIL 3/IL507
47. FLUSHING FLOOR DRAIN–BY DIV. 22
48. CONTROLS FOR RANGE AIR HANDLING SYSTEM– DIV. 23
49. 36"L X 12" W X 1" THICK MAPLE WOOD SHELF MOUNT & 48" AFF–SPEC 123450
50. CW CONNECTION @ 48" A.F.F.–REFER TO PLUMB. VERIFY LOCATION BASED ON APPROVED SHOP DRAWINGS OF PRT
51. MANUAL OPERATED BLACKOUT SHADE–SPEC 122413
52. LOW ELEVATION EXHAUST– REFER TO MECHANICAL
53. BUG ZAPPER MOUNTED @ +84" A.F.F.–BY DIV 26 –SPEC 116000
54. HAMPER– NIC
55. 2–1/2" X 18" CORD SLOT
56. EXHAUST VENTS BY DISSECTING STATION MFR. (VERIFY 8"X24") –COORDINATE DUCTWORK WITH DIV. 23
57. ACID VENT PIPE– REFER TO DETAIL 2/IL500 AND MECHANICAL
58. ADJUSTABLE TOOL RACK–SPEC 114900 REFER TO DETAIL 4/IL507
59. 12"X12"X12" FLOOR SINK–BY DIV. 22
60. PRESSURE DIFFERENTIAL INDICATOR @ 54" AFF– BY DIV. 23
61. LEVEL 4 BULLET RESISTANT WINDOW & FRAME– SPEC 085653
62. DIRECT CONNECT EXHAUST– BY DIV. 23
63. DIGITAL READOUT FOR SCALE–SPEC 117810
64. ACID VENT DUCT– REFER TO TACDx ELEVATION ON IL004– BY DIV. 23
65. BELOW COUNTER RECEPTACLE RECESSED INTO SERVICE CLOSURE PANEL– REFER TO ELECTRICAL DRAWINGS.
66. TRENCH DRAIN– BY DIV. 22
67. USER CONTROLLED AIR FLOW SWITCH–BY DIV. 23
68. BULLET TRAP/RANGE SIGN MOUNTED AT 60" AFF TO BOTTOM–SPEC. 114900
69. PRT SIGN MOUNTED AT 60" AFF TO BOTTOM. –SPEC. 114900
70. WALL MOUNTED FLAT PANEL MONITOR–BY DIV. 27
71. COOLER CONTROL PANEL
72. IN–WALL FLUSH VALVE FOR FLUSHING FLOOR DRAINS – BY DIV. 22
73. EXISTING AMMO STORAGE SHELVING SYSTEM TO BE RELOCATED TO NEW FACILITY BY CONTRACTOR
74. BACKDRAFT EXHAUST GRILLE– BY DIV. 23 REFER TO MECH. FOR SIZE, MOUNT ABOVE COUNTERTOP BACKSPLASH
75. ADA COMPLIANT S.S. SINK–BY DIV. 22
76. REMOVABLE EVIDENCE RACK MOUNTED TO MOBILE TABLE–REFER TO DETAIL A8/IL501–SPEC 123450
77. UMBILICAL SERVICE CHASE–SPEC 123450
78. DIRECT CONNECT PRT TO CW
79. COMPRESSED AIR– BY DIV. 23
80. TYPE 3 RO WATER FAUCET– COUNTER MOUNTED
81. TYPE 1 DI WATER POLISHER– WALL MOUNTED
82. GLASS WALL PANEL–REFER TO ARCH.
83. HUB DRAIN FOR BODY FREEZER CONDENSATE BY DIV. 22
84. HUB DRAIN– BY DIV. 22
85. MONITOR AND INTERCOM TO OUTSIDE PEDESTAL – BY DIV. 26
86. S.S. WALL GUARD – REFER TO DET. 9/IL506. IN ROOMS 125, 125A AND 125B S.S. WALL GUARDS ARE TO BE BY COOLER MFR.
87. S.S. CORNER GUARD – REFER TO DET. 9/IL505
88. ADJUSTABLE DOCK LIGHT– BY DIV. 26
89. X–RAY ROOM TO BE R.F. SHIELDED PER QUALIFIED PHYSICIST CONSULTANT PRIOR TO CONSTRUCTION.
90. INTEGRAL COUNTERTOP SIDE SPLASH
91. MOP AND BROOM HOLDER RACK–SPEC. 116000
92. STEEL STRUCTURE TO SUPPORT DISSECTING STATION –BY STRUCTURAL ENGINEER
93. APPROXIMATE LOCATION OF EVAPORATING UNITS IN COLD ROOMS MOUNTED NEAR CEILING
94. SCALE POLE BRACKET–SPEC 117810
95. SPRAY HOSE ASSEMBLY – SPEC. 117800
96. MONITOR MOUNTED ON ARTICULATING SWIVEL ARM BRACKET–BY DIV. 27
97. HYDRO ASPIRATOR – SPEC. 117810
98. STUB FOR FUTURE DIRECT EXHAUST AND SNORKEL CONNECTION– BY DIV. 23
99. 3' H X 4' W MARKER BOARD–SPEC. 101100
100. ARTICULATING MARKER BOARD–SPEC 116000
101. S.S. SHELF – 12"L x 10"D
102. S.S. SHELF – 11"D, PROVIDE HOLE IN SHELF FOR SCALE POST AND ALIGN WITH SCALE POST BRACKET
103. MATCHING BACK DRAFT WALL VENTS SUPPLIED BY DISSECTION TABLE MFR SPEC 117810 – DIV. 23 WILL CONNECT THE EXHAUST.
104. 6" INTEGRAL WALL BASE– REFER TO FINISH SCHEDULE
105. INSTRUMENT DRAWER
106. DISPOSAL SWITCH
107. GFCI OUTLET W/ WEATHERPROOF COVER
108. 2 HP DISPOSAL– SPEC. 117810
109. END RINSE CONTROL VALVE
110. HW & CW MIXING FAUCET
111. EXHAUST VENTS BY DISSECTING STATION MFR. (8"X30") –COORDINATE DUCTWORK WITH DIV. 23
112. PASS THROUGH CABINET WITH VISION DOORS SPEC 116000– REFER TO DETAIL 2/IL508
113. ABOVE COUNTER RECEPTACLE RECESSED INTO SERVICE CLOSURE PANEL OR CHASE– REFER TO ELECTRICAL DRAWINGS.
114. STAINLESS STEEL CANOPY–BY DIV. 23
115. CURTAIN AND TRACK– BY DIV. 10
116. MARBLE TABLE – SPEC. 116000
117. TASK LIGHT– BY DIV. 26
118. LIQUID NITROGEN DEWAR, NIC
119. 1" DIA. HOLE W/CAP FOR DI WATER DELIVERY DEVICE.
120. (2) PADLOCK RACK MOUNTED ON WALL @54" AFF AND 48" AFF
121. EXHAUST VENTS TO BE HAVE OPPOSED BLADE DAMPER ACCESSIBLE TROUGH THE FACE OF THE GRILL FOR AIR BALANCING –BY DISSECTING TABLE MFR
122. POWER FROM BELOW– BY DIV. 26

CRSA
649 E. South Temple
Salt Lake City, UT 84102
801.355.5915

MWL
McClaren, Wilson & Lawrie, Inc.
11798 North Lakeridge Parkway
Ashland, Va 23005
(804)228.7465
www.mwlarchitects.com

State of Utah
Department of Administrative Services
Division of Facilities Construction & Management
4110 State Office Building
Salt Lake City, Utah 84114
Phone: (801) 538 - 3018
Fax: (801) 538 - 3267

DIVISION OF FACILITIES CONSTRUCTION AND MANAGEMENT
REVIEWED FOR CODE COMPLIANCE
SIGNATURE:
DATE: 08-05-2014

STATUS
Not For Construction

ARCHITECT-ENGINEER STAMP

KEY PLAN

Project #: B13-024

DATE:	REVISION:
APRIL 21, 2014	BID SET

CHECKED BY	B.CARVER
DRAWN BY	B.WARREN / A.VIG

1ST FLOOR ENLARGED LAB PLANS

IL102

VOLUME 1

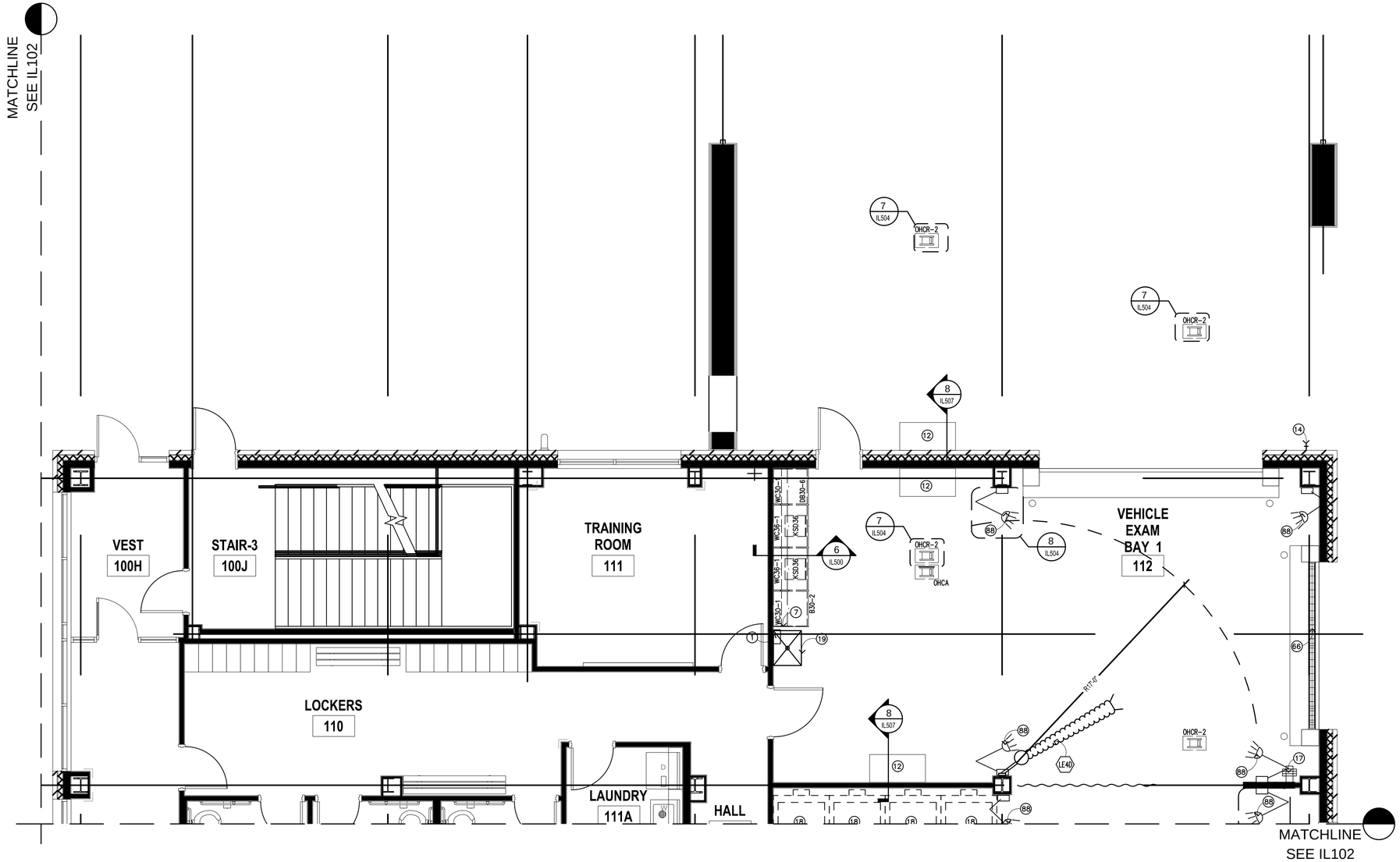

KEY SYMBOLS

- (L) LOCKING
- (M) MONITOR TO BMS
- (EW) DECK MOUNTED DRENCH HOSE EYEWASH FIXTURE
- (CA) COMPRESSED AIR
- (XX)— MARINE EDGE COUNTER ELEVATION IN INCHES
- (XX)— NON-MARINE EDGE COUNTER ELEVATION IN INCHES
- (X) KEY NOTES
- (XX) EQUIPMENT
- [XXX] ROOM NUMBERS

ABBREVIATIONS

BFF	BELOW FINISHED FLOOR
HD	HUB DRAIN
FD	FLOOR DRAIN
FFD	FLUSHABLE FLOOR DRAIN
SS	STAINLESS STEEL

KEY NOTES

1. PAPER TOWEL DISPENSER– SPEC. 116000
2. COAT HOOKS MOUNTED @54" AFF–SPEC 116000
3. SAFETY SUPPLY CABINET–SPEC 116000
4. INLET PORT FOR HYDROGEN GENERATOR
5. OPEN TO FINISH WALL SURFACE
6. EPOXY DRYING RACK – 18"x36" – SPEC 123450
7. FILLER PANEL – MATCH CASEWORK MATERIAL
8. OMIT FRONT AND BACK APRON FOR 34" HIGH UNDER COUNTER EQUIPMENT.
9. SS SHELVING–SPEC 116000
10. 2 1/2" CORD GROMMET–SPEC 123450
11. CONTROL PANEL FOR FA7 (TARGET TROLLEY)
12. 2'X4' STAINLESS STEEL FOLD DOWN SURFACE – REFER TO DETAIL 8/IL507
13. COUNTERTOP MOUNTED COMPRESSED AIR (CA) TURRET
14. COLD WATER HOSE BIB @54" AFF– BY DIV. 22
15. HIGH DENSITY SHELVING– BY DIV. 10
16. KSSF SUPPORT FRAME– REFER TO DETAIL 9/IL500
17. HOT & COLD MIXING STATION–BY DIV. 22 (W/ 30' OF HOSE)
18. MOBILE LIFT PARK
19. UTILITY SINK– BY DIV. 22
20. UNDER COUNTER KNEE WALL SUPPORT –REFER TO ARCHITECTURAL
21. SPILL CART–SPEC 116000
22. SUPPORT LEG–BY DIV. 12
23. COAT RACK & SHELF–SPEC 116000
24. WALL MOUNTED PAPER ROLL DISPENSER WITH PLASTIC LAMINATE COVERED PLYWOOD BACKBOARD. 36"HX12"H MOUNTED AT 48" AFF TO BOTTOM.
25. DOUBLE KSSF– REFER TO DETAIL 1/IL509
26. ELEVATION TRANSITION POINT
27. MILLWORK–BY DIV. 6
28. FORMALIN SPIGOT
29. UNDERCOUNTER TYPE I WATER POLISHER–BY DIV. 22
30. ALL STAINLESS STEEL CASEWORK IN AUTOPSY SUITES WILL HAVE MARINE EDGE COUNTER TOPS.
31. GAS MANIFOLD @66" A.F.F. (BOTTOM) –BY DIV. 22
32. FLOOR DRAIN– BY DIV. 22
33. DISSECTION TABLE SHELF BY MFR
34. STAINLESS STEEL SCRUB SINK– BY DIV. 22
35. LEVEL 4 BULLET RESISTANT DOOR/FRAME–SPEC 083950
36. 'IN USE' LIGHT–DETAIL–1/IL507–BY DIV. 26
37. PUMP CONTROL FOR FORMALIN DISPENSOR
38. MAPLE COUNTER–2" THICK W/ 3/4" X 3 1/2" MAPLE BACK SPLASH W/ 4" LEADING EDGE OVERHANG– SPEC 123450
39. 8" DIA. EXHAUST DUCT FROM PROJECTILE RECOVERY TANK. DIV. 23 TO CONNECT EXHAUST
40. MOBILE DISSECTING WING–SPEC 117810
41. WALL MOUNTED LONG GUN RACK – REFER TO 3/IL508
42. PAINTED 3" NUMBER AND ARROW WHITE PAINT STENCILED ON RUBBER PANELS AT 1 YARD INCREMENTS MEASURED FROM THE ZERO POINT OF THE FIRING LINE. ACCURACY REQUIRED WITHIN 1/16".– REFER TO 3/IL507
43. OPEN ALL OF THE WAY THROUGH
44. GAS ANNUNCIATOR PANEL– BY DIV. 22
45. FORMALIN CONTAINER AND DISPENSING PUMP
46. PAINTED FIRING LINE– REFER TO DETAIL 3/IL507
47. FLUSHING FLOOR DRAIN–BY DIV. 22
48. CONTROLS FOR RANGE AIR HANDLING SYSTEM– DIV. 23
49. 36"L X 12" W X 1" THICK MAPLE WOOD SHELF MOUNT & 48" AFF–SPEC 123450
50. CW CONNECTION @ 48" A.F.F.–REFER TO PLUMB. VERIFY LOCATION BASED ON APPROVED SHOP DRAWINGS OF PRT
51. MANUAL OPERATED BLACKOUT SHADE–SPEC 122413
52. LOW ELEVATION EXHAUST– REFER TO MECHANICAL
53. BUG ZAPPER MOUNTED @ +84" A.F.F.–BY DIV 26 –SPEC 116000
54. HAMPER– NIC
55. 2-1/2" X 18" CORD SLOT
56. EXHAUST VENTS BY DISSECTING STATION MFR. (VERIFY 8"X24") –COORDINATE DUCTWORK WITH DIV. 23
57. ACID VENT PIPE– REFER TO DETAIL 2/IL500 AND MECHANICAL
58. ADJUSTABLE TOOL RACK–SPEC 114900 REFER TO DETAIL 4/IL507
59. 12"X12"X12" FLOOR SINK–BY DIV. 22
60. PRESSURE DIFFERENTIAL INDICATOR @ 54" AFF– BY DIV. 23
61. LEVEL 4 BULLET RESISTANT WINDOW & FRAME– SPEC 085653
62. DIRECT CONNECT EXHAUST– BY DIV. 23
63. DIGITAL READOUT FOR SCALE–SPEC 117810
64. ACID VENT DUCT– REFER TO TACDx ELEVATION ON IL004– BY DIV. 23
65. BELOW COUNTER RECEPTACLE RECESSED INTO SERVICE CLOSURE PANEL– REFER TO ELECTRICAL DRAWINGS.
66. TRENCH DRAIN– BY DIV. 22
67. USER CONTROLLED AIR FLOW SWITCH–BY DIV. 23
68. BULLET TRAP/RANGE SIGN MOUNTED AT 60" AFF TO BOTTOM–SPEC. 114900
69. PRT SIGN MOUNTED AT 60" AFF TO BOTTOM. –SPEC. 114900
70. WALL MOUNTED FLAT PANEL MONITOR–BY DIV. 27
71. COOLER CONTROL PANEL
72. IN-WALL FLUSH VALVE FOR FLUSHING FLOOR DRAINS – BY DIV. 22
73. EXISTING AMMO STORAGE SHELVING SYSTEM TO BE RELOCATED TO NEW FACILITY BY CONTRACTOR
74. BACKDRAFT EXHAUST GRILLE– BY DIV. 23 REFER TO MECH. FOR SIZE, MOUNT ABOVE COUNTERTOP BACKSPLASH
75. ADA COMPLIANT S.S. SINK–BY DIV. 22
76. REMOVABLE EVIDENCE RACK MOUNTED TO MOBILE TABLE–REFER TO DETAIL A8/IL501–SPEC 123450
77. UMBILICAL SERVICE CHASE–SPEC 123450
78. DIRECT CONNECT PRT TO CW
79. COMPRESSED AIR– BY DIV. 23
80. TYPE 3 RO WATER FAUCET– COUNTER MOUNTED
81. TYPE 1 DI WATER POLISHER– WALL MOUNTED
82. GLASS WALL PANEL–REFER TO ARCH.
83. HUB DRAIN FOR BODY FREEZER CONDENSATE BY DIV. 22
84. HUB DRAIN– BY DIV. 22
85. MONITOR AND INTERCOM TO OUTSIDE PEDESTAL – BY DIV. 26
86. S.S. WALL GUARD – REFER TO DET. 9/IL506. IN ROOMS 125, 125A AND 125B S.S. WALL GUARDS ARE TO BE BY COOLER MFR.
87. S.S. CORNER GUARD – REFER TO DET. 9/IL505
88. ADJUSTABLE DOCK LIGHT– BY DIV. 26
89. X-RAY ROOM TO BE R.F. SHIELDED PER QUALIFIED PHYSICIST CONSULTANT PRIOR TO CONSTRUCTION.
90. INTEGRAL COUNTERTOP SIDE SPLASH
91. MOP AND BROOM HOLDER RACK–SPEC. 116000
92. STEEL STRUCTURE TO SUPPORT DISSECTING STATION –BY STRUCTURAL ENGINEER
93. APPROXIMATE LOCATION OF EVAPORATING UNITS IN COLD ROOMS MOUNTED NEAR CEILING
94. SCALE POLE BRACKET–SPEC 117810
95. SPRAY HOSE ASSEMBLY – SPEC. 117800
96. MONITOR MOUNTED ON ARTICULATING SWIVEL ARM BRACKET–BY DIV. 27
97. HYDRO ASPIRATOR – SPEC. 117810
98. STUB FOR FUTURE DIRECT EXHAUST AND SNORKEL CONNECTION– BY DIV. 23
99. 3' H X 4' W MARKER BOARD–SPEC. 101100
100. ARTICULATING MARKER BOARD–SPEC 116000
101. S.S. SHELF – 12"L x 10"D
102. S.S. SHELF – 11"D, PROVIDE HOLE IN SHELF FOR SCALE POST AND ALIGN WITH SCALE POST BRACKET
103. MATCHING BACK DRAFT WALL VENTS SUPPLIED BY DISSECTION TABLE MFR SPEC 117810 – DIV. 23 WILL CONNECT THE EXHAUST.
104. 6" INTEGRAL WALL BASE– REFER TO FINISH SCHEDULE
105. INSTRUMENT DRAWER
106. DISPOSAL SWITCH
107. GFCI OUTLET W/ WEATHERPROOF COVER
108. 2 HP DISPOSAL– SPEC. 117810
109. END RINSE CONTROL VALVE
110. HW & CW MIXING FAUCET
111. EXHAUST VENTS BY DISSECTING STATION MFR. (8"X30") –COORDINATE DUCTWORK WITH DIV. 23
112. PASS THROUGH CABINET WITH VISION DOORS SPEC 116000– REFER TO DETAIL 2/IL508
113. ABOVE COUNTER RECEPTACLE RECESSED INTO SERVICE CLOSURE PANEL OR CHASE– REFER TO ELECTRICAL DRAWINGS.
114. STAINLESS STEEL CANOPY–BY DIV. 23
115. CURTAIN AND TRACK– BY DIV. 10
116. MARBLE TABLE – SPEC. 116000
117. TASK LIGHT– BY DIV. 26
118. LIQUID NITROGEN DEWAR, NIC
119. 1" DIA. HOLE W/CAP FOR DI WATER DELIVERY DEVICE.
120. (2) PADLOCK RACK MOUNTED ON WALL @54" AFF AND 48" AFF
121. EXHAUST VENTS TO BE HAVE OPPOSED BLADE DAMPER ACCESSIBLE TROUGH THE FACE OF THE GRILL FOR AIR BALANCING –BY DISSECTING TABLE MFR
122. POWER FROM BELOW– BY DIV. 26

CRSA
649 E. South Temple
Salt Lake City, UT 84102
801.355.5915

MWL
McClaren, Wilson & Lawrie, Inc.
11798 North Lakeridge Parkway
Ashland, Va 23005
(804)228.7465
www.mwlarchitects.com

State of Utah
Department of Administrative Services
Division of Facilities Construction & Management
4110 State Office Building
Salt Lake City, Utah 84114
Phone: (801) 538 - 3018
Fax: (801) 538 - 3267

DIVISION OF FACILITIES CONSTRUCTION AND MANAGEMENT
REVIEWED FOR CODE COMPLIANCE
SIGNATURE:
DATE: 08-05-2014

STATUS
Not For Construction

ARCHITECT-ENGINEER STAMP

KEY PLAN

Project #: B13-024

DATE:	REVISION:
APRIL 21, 2014	BID SET
CHECKED BY	B.CARVER
DRAWN BY	B.WARREN / A.VIG

1ST FLOOR ENLARGED LAB PLANS

IL103

VOLUME 1

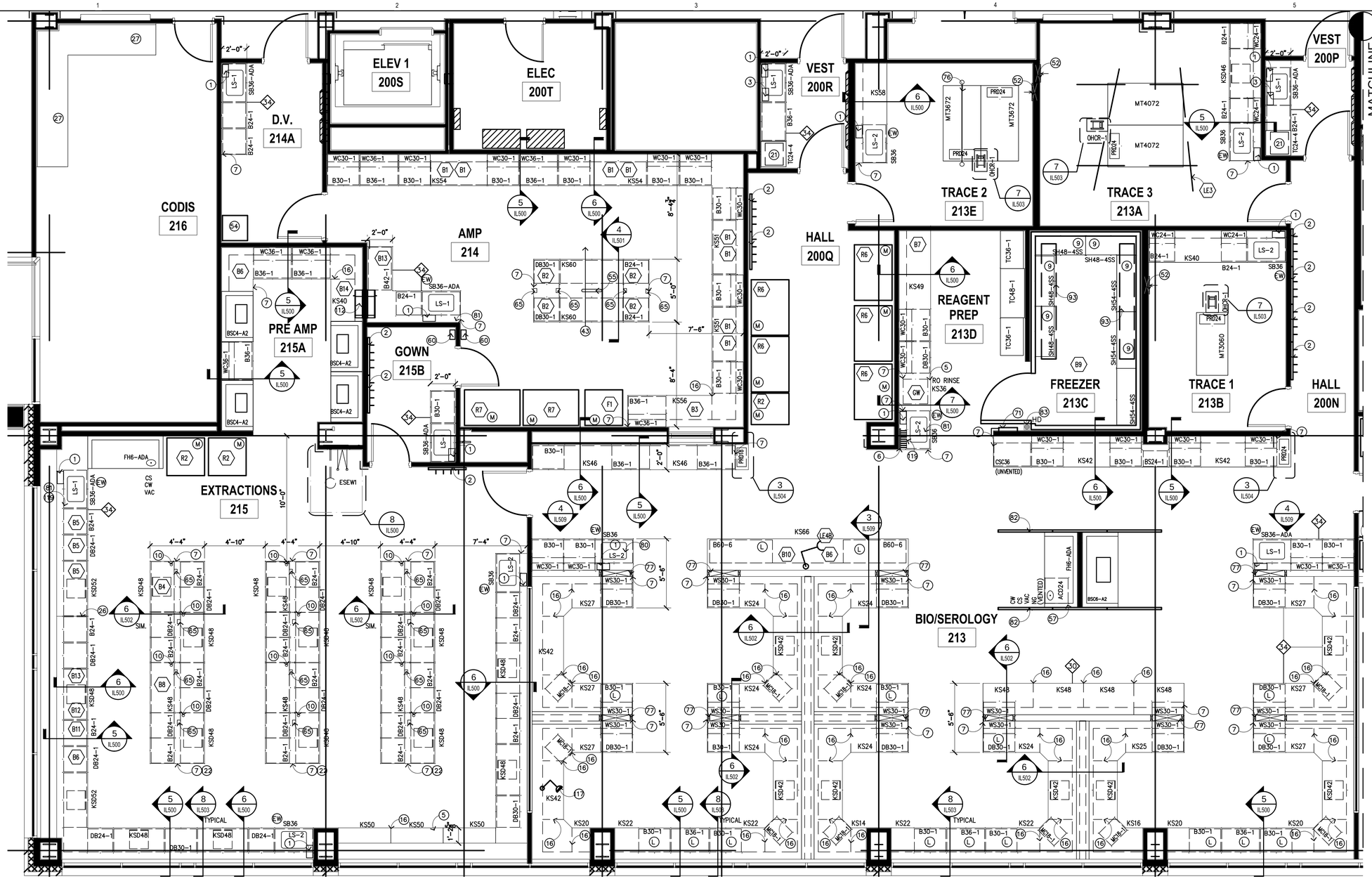

KEY SYMBOLS

- (L) LOCKING
- (M) MONITOR TO BMS
- (EW) DECK MOUNTED DRENCH HOSE EYEWASH FIXTURE
- (CA) COMPRESSED AIR
- (XXX) MARINE EDGE COUNTER ELEVATION IN INCHES
- (XX) NON-MARINE EDGE COUNTER ELEVATION IN INCHES
- (X) KEY NOTES
- (XX) EQUIPMENT
- [XXX] ROOM NUMBERS

ABBREVIATIONS

BFF	BELOW FINISHED FLOOR
HD	HUB DRAIN
FD	FLOOR DRAIN
FFD	FLUSHABLE FLOOR DRAIN
SS	STAINLESS STEEL

KEY NOTES

1. PAPER TOWEL DISPENSER– SPEC. 116000
2. COAT HOOKS MOUNTED @54" AFF–SPEC 116000
3. SAFETY SUPPLY CABINET–SPEC 116000
4. INLET PORT FOR HYDROGEN GENERATOR
5. OPEN TO FINISH WALL SURFACE
6. EPOXY DRYING RACK – 18"x36" – SPEC 123450
7. FILLER PANEL – MATCH CASEWORK MATERIAL
8. OMIT FRONT AND BACK APRON FOR 34" HIGH UNDER COUNTER EQUIPMENT.
9. SS SHELVING–SPEC 116000
10. 2 1/2" CORD GROMMET–SPEC 123450
11. CONTROL PANEL FOR FA7 (TARGET TROLLEY)
12. 2'X4' STAINLESS STEEL FOLD DOWN SURFACE – REFER TO DETAIL 8/IL507
13. COUNTERTOP MOUNTED COMPRESSED AIR (CA) TURRET
14. COLD WATER HOSE BIB @54" AFF– BY DIV. 22
15. HIGH DENSITY SHELVING– BY DIV. 10
16. KSSF SUPPORT FRAME– REFER TO DETAIL 9/IL500
17. HOT & COLD MIXING STATION–BY DIV. 22 (W/ 30' OF HOSE)
18. MOBILE LIFT PARK
19. UTILITY SINK– BY DIV. 22
20. UNDER COUNTER KNEE WALL SUPPORT –REFER TO ARCHITECTURAL
21. SPILL CART–SPEC 116000
22. SUPPORT LEG–BY DIV. 12
23. COAT RACK & SHELF–SPEC 116000
24. WALL MOUNTED PAPER ROLL DISPENSER WITH PLASTIC LAMINATE COVERED PLYWOOD BACKBOARD. 36"HX12"H MOUNTED AT 48" AFF TO BOTTOM.
25. DOUBLE KSSF– REFER TO DETAIL 1/IL509
26. ELEVATION TRANSITION POINT
27. MILLWORK–BY DIV. 6
28. FORMALIN SPIGOT
29. UNDERCOUNTER TYPE I WATER POLISHER–BY DIV. 22
30. ALL STAINLESS STEEL CASEWORK IN AUTOPSY SUITES WILL HAVE MARINE EDGE COUNTER TOPS.
31. GAS MANIFOLD @66" A.F.F. (BOTTOM) –BY DIV. 22
32. FLOOR DRAIN– BY DIV. 22
33. DISSECTION TABLE SHELF BY MFR
34. STAINLESS STEEL SCRUB SINK– BY DIV. 22
35. LEVEL 4 BULLET RESISTANT DOOR/FRAME–SPEC 083950
36. 'IN USE' LIGHT–DETAIL–1/IL507–BY DIV. 26
37. PUMP CONTROL FOR FORMALIN DISPENSOR
38. MAPLE COUNTER–2" THICK W/ 3/4" X 3 1/2" MAPLE BACK SPLASH W/ 4" LEADING EDGE OVERHANG– SPEC 123450
39. 8" DIA. EXHAUST DUCT FROM PROJECTILE RECOVERY TANK. DIV. 23 TO CONNECT EXHAUST
40. MOBILE DISSECTING WING–SPEC 117810
41. WALL MOUNTED LONG GUN RACK – REFER TO 3/IL508
42. PAINTED 3" NUMBER AND ARROW WHITE PAINT STENCILED ON RUBBER PANELS AT 1 YARD INCREMENTS MEASURED FROM THE ZERO POINT OF THE FIRING LINE. ACCURACY REQUIRED WITHIN 1/16"– REFER TO 3/IL507
43. OPEN ALL OF THE WAY THROUGH
44. GAS ANNUNCIATOR PANEL– BY DIV. 22
45. FORMALIN CONTAINER AND DISPENSING PUMP
46. PAINTED FIRING LINE– REFER TO DETAIL 3/IL507
47. FLUSHING FLOOR DRAIN–BY DIV. 22
48. CONTROLS FOR RANGE AIR HANDLING SYSTEM– DIV. 23
49. 36"L X 12" W X 1" THICK MAPLE WOOD SHELF MOUNT & 48" AFF–SPEC 123450
50. CW CONNECTION @ 48" A.F.F.–REFER TO PLUMB. VERIFY LOCATION BASED ON APPROVED SHOP DRAWINGS OF PRT
51. MANUAL OPERATED BLACKOUT SHADE–SPEC 122413
52. LOW ELEVATION EXHAUST– REFER TO MECHANICAL
53. BUG ZAPPER MOUNTED @ +84" A.F.F.–BY DIV 26 –SPEC 116000
54. HAMPER– NIC
55. 2–1/2" X 18" CORD SLOT
56. EXHAUST VENTS BY DISSECTING STATION MFR. (VERIFY 8"X24") –COORDINATE DUCTWORK WITH DIV. 23
57. ACID VENT PIPE– REFER TO DETAIL 2/IL500 AND MECHANICAL
58. ADJUSTABLE TOOL RACK–SPEC 114900 REFER TO DETAIL 4/IL507
59. 12"X12"X12" FLOOR SINK–BY DIV. 22
60. PRESSURE DIFFERENTIAL INDICATOR @ 54" AFF– BY DIV. 23
61. LEVEL 4 BULLET RESISTANT WINDOW & FRAME– SPEC 085653
62. DIRECT CONNECT EXHAUST– BY DIV. 23
63. DIGITAL READOUT FOR SCALE–SPEC 117810
64. ACID VENT DUCT– REFER TO TACDx ELEVATION ON IL004– BY DIV. 23
65. BELOW COUNTER RECEPTACLE RECESSED INTO SERVICE CLOSURE PANEL– REFER TO ELECTRICAL DRAWINGS.
66. TRENCH DRAIN– BY DIV. 22
67. USER CONTROLLED AIR FLOW SWITCH–BY DIV. 23
68. BULLET TRAP/RANGE SIGN MOUNTED AT 60" AFF TO BOTTOM–SPEC. 114900
69. PRT SIGN MOUNTED AT 60" AFF TO BOTTOM. –SPEC. 114900
70. WALL MOUNTED FLAT PANEL MONITOR–BY DIV. 27
71. COOLER CONTROL PANEL
72. IN–WALL FLUSH VALVE FOR FLUSHING FLOOR DRAINS – BY DIV. 22
73. EXISTING AMMO STORAGE SHELVING SYSTEM TO BE RELOCATED TO NEW FACILITY BY CONTRACTOR
74. BACKDRAFT EXHAUST GRILLE– BY DIV. 23 REFER TO MECH. FOR SIZE, MOUNT ABOVE COUNTERTOP BACKSPLASH
75. ADA COMPLIANT S.S. SINK–BY DIV. 22
76. REMOVABLE EVIDENCE RACK MOUNTED TO MOBILE TABLE–REFER TO DETAIL A8/IL501–SPEC 123450
77. UMBILICAL SERVICE CHASE–SPEC 123450
78. DIRECT CONNECT PRT TO CW
79. COMPRESSED AIR– BY DIV. 23
80. TYPE 3 RO WATER FAUCET– COUNTER MOUNTED
81. TYPE 1 DI WATER POLISHER– WALL MOUNTED
82. GLASS WALL PANEL–REFER TO ARCH.
83. HUB DRAIN FOR BODY FREEZER CONDENSATE BY DIV. 22
84. HUB DRAIN– BY DIV. 22
85. MONITOR AND INTERCOM TO OUTSIDE PEDESTAL – BY DIV. 26
86. S.S. WALL GUARD – REFER TO DET. 9/IL506. IN ROOMS 125, 125A AND 125B S.S. WALL GUARDS ARE TO BE BY COOLER MFR.
87. S.S. CORNER GUARD – REFER TO DET. 9/IL505
88. ADJUSTABLE DOCK LIGHT– BY DIV. 26
89. X–RAY ROOM TO BE R.F. SHIELDED PER QUALIFIED PHYSICIST CONSULTANT PRIOR TO CONSTRUCTION.
90. INTEGRAL COUNTERTOP SIDE SPLASH
91. MOP AND BROOM HOLDER RACK–SPEC. 116000
92. STEEL STRUCTURE TO SUPPORT DISSECTING STATION –BY STRUCTURAL ENGINEER
93. APPROXIMATE LOCATION OF EVAPORATING UNITS IN COLD ROOMS MOUNTED NEAR CEILING
94. SCALE POLE BRACKET–SPEC 117810
95. SPRAY HOSE ASSEMBLY – SPEC. 117800
96. MONITOR MOUNTED ON ARTICULATING SWIVEL ARM BRACKET–BY DIV. 27
97. HYDRO ASPIRATOR – SPEC. 117810
98. STUB FOR FUTURE DIRECT EXHAUST AND SNORKEL CONNECTION– BY DIV. 23
99. 3' H X 4' W MARKER BOARD–SPEC. 101100
100. ARTICULATING MARKER BOARD–SPEC 116000
101. S.S. SHELF – 12"L x 10"D
102. S.S. SHELF – 11"D, PROVIDE HOLE IN SHELF FOR SCALE POST AND ALIGN WITH SCALE POST BRACKET
103. MATCHING BACK DRAFT WALL VENTS SUPPLIED BY DISSECTION TABLE MFR SPEC 117810 – DIV. 23 WILL CONNECT THE EXHAUST.
104. 6" INTEGRAL WALL BASE– REFER TO FINISH SCHEDULE
105. INSTRUMENT DRAWER
106. DISPOSAL SWITCH
107. GFCI OUTLET W/ WEATHERPROOF COVER
108. 2 HP DISPOSAL– SPEC. 117810
109. END RINSE CONTROL VALVE
110. HW & CW MIXING FAUCET
111. EXHAUST VENTS BY DISSECTING STATION MFR. (8"X30") –COORDINATE DUCTWORK WITH DIV. 23
112. PASS THROUGH CABINET WITH VISION DOORS SPEC 116000– REFER TO DETAIL 2/IL508
113. ABOVE COUNTER RECEPTACLE RECESSED INTO SERVICE CLOSURE PANEL OR CHASE– REFER TO ELECTRICAL DRAWINGS.
114. STAINLESS STEEL CANOPY–BY DIV. 23
115. CURTAIN AND TRACK– BY DIV. 10
116. MARBLE TABLE – SPEC. 116000
117. TASK LIGHT– BY DIV. 26
118. LIQUID NITROGEN DEWAR, NIC
119. 1" DIA. HOLE W/CAP FOR DI WATER DELIVERY DEVICE.
120. (2) PADLOCK RACK MOUNTED ON WALL @54" AFF AND 48" AFF
121. EXHAUST VENTS TO BE HAVE OPPOSED BLADE DAMPER ACCESSIBLE TROUGH THE FACE OF THE GRILL FOR AIR BALANCING –BY DISSECTING TABLE MFR
122. POWER FROM BELOW– BY DIV. 26

CRSA
649 E. South Temple
Salt Lake City, UT 84102
801.355.5915

MWL
McClaren, Wilson & Lawrie, Inc.
11798 North Lakeridge Parkway
Ashland, Va 23005
(804)228.7465
www.mwlarchitects.com

State of Utah
Department of Administrative Services
Division of Facilities Construction & Management
4110 State Office Building
Salt Lake City, Utah 84114
Phone: (801) 538 - 3018
Fax: (801) 538 - 3267

DIVISION OF FACILITIES CONSTRUCTION AND MANAGEMENT
REVIEWED FOR CODE COMPLIANCE
SIGNATURE: Ernie Gelb
DATE: 08-05-2014

STATUS
Not For Construction

ARCHITECT-ENGINEER STAMP

KEY PLAN

Project #: B13-024

DATE:	REVISION:
APRIL 21, 2014	BID SET

CHECKED BY	B.CARVER
DRAWN BY	B.WARREN / A.VIG

2ND FLOOR ENLARGED LAB PLANS

IL104

VOLUME 1

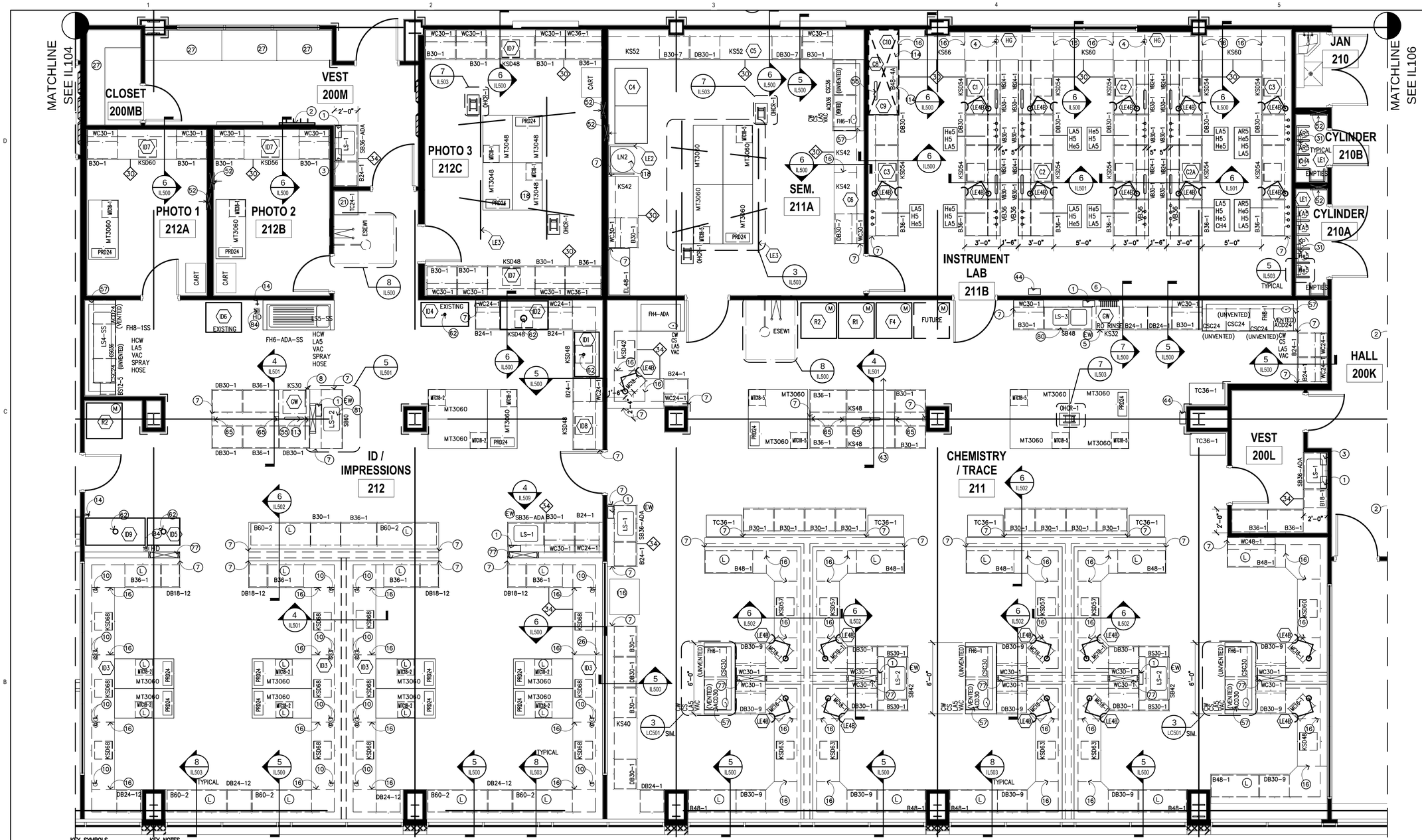

KEY SYMBOLS

- (L) LOCKING
- (M) MONITOR TO BMS
- (EW) DECK MOUNTED DRENCH HOSE EYEWASH FIXTURE
- (CA) COMPRESSED AIR
- XX/A MARINE EDGE COUNTER ELEVATION IN INCHES
- XX NON-MARINE EDGE COUNTER ELEVATION IN INCHES
- (X) KEY NOTES
- (XX) EQUIPMENT
- XXX ROOM NUMBERS

ABBREVIATIONS

BFF	BELOW FINISHED FLOOR
HD	HUB DRAIN
FD	FLOOR DRAIN
FFD	FLUSHABLE FLOOR DRAIN
SS	STAINLESS STEEL

KEY NOTES

1. PAPER TOWEL DISPENSER– SPEC. 116000
2. COAT HOOKS MOUNTED @54" AFF–SPEC 116000
3. SAFETY SUPPLY CABINET–SPEC 116000
4. INLET PORT FOR HYDROGEN GENERATOR
5. OPEN TO FINISH WALL SURFACE
6. EPOXY DRYING RACK – 18"x36" – SPEC 123450
7. FILLER PANEL – MATCH CASEWORK MATERIAL
8. OMIT FRONT AND BACK APRON FOR 34" HIGH UNDER COUNTER EQUIPMENT.
9. SS SHELVING–SPEC 116000
10. 2 1/2" CORD GROMMET–SPEC 123450
11. CONTROL PANEL FOR FA7 (TARGET TROLLEY)
12. 2'X4' STAINLESS STEEL FOLD DOWN SURFACE – REFER TO DETAIL 8/IL507
13. COUNTERTOP MOUNTED COMPRESSED AIR (CA) TURRET
14. COLD WATER HOSE BIB @54" AFF– BY DIV. 22
15. HIGH DENSITY SHELVING– BY DIV. 10
16. KSSF SUPPORT FRAME– REFER TO DETAIL 9/IL500
17. HOT & COLD MIXING STATION–BY DIV. 22 (W/ 30' OF HOSE)
18. MOBILE LIFT PARK
19. UTILITY SINK– BY DIV. 22
20. UNDER COUNTER KNEE WALL SUPPORT –REFER TO ARCHITECTURAL
21. SPILL CART–SPEC 116000
22. SUPPORT LEG–BY DIV. 12
23. COAT RACK & SHELF–SPEC 116000
24. WALL MOUNTED PAPER ROLL DISPENSER WITH PLASTIC LAMINATE COVERED PLYWOOD BACKBOARD. 36"HX12"H MOUNTED AT 48" AFF TO BOTTOM.
25. DOUBLE KSSF– REFER TO DETAIL 1/IL509
26. ELEVATION TRANSITION POINT
27. MILLWORK–BY DIV. 6
28. FORMALIN SPIGOT
29. UNDERCOUNTER TYPE I WATER POLISHER–BY DIV. 22
30. ALL STAINLESS STEEL CASEWORK IN AUTOPSY SUITES WILL HAVE MARINE EDGE COUNTER TOPS.
31. GAS MANIFOLD @66" A.F.F. (BOTTOM) –BY DIV. 22
32. FLOOR DRAIN– BY DIV. 22
33. DISSECTION TABLE SHELF BY MFR
34. STAINLESS STEEL SCRUB SINK– BY DIV. 22
35. LEVEL 4 BULLET RESISTANT DOOR/FRAME–SPEC 083950
36. 'IN USE' LIGHT–DETAIL–1/IL507–BY DIV. 26
37. PUMP CONTROL FOR FORMALIN DISPENSOR
38. MAPLE COUNTER–2" THICK W/ 3/4" X 3 1/2" MAPLE BACK SPLASH W/ 4" LEADING EDGE OVERHANG– SPEC 123450
39. 8" DIA. EXHAUST DUCT FROM PROJECTILE RECOVERY TANK. DIV. 23 TO CONNECT EXHAUST
40. MOBILE DISSECTING WING–SPEC 117810
41. WALL MOUNTED LONG GUN RACK – REFER TO 3/IL508
42. PAINTED 3" NUMBER AND ARROW WHITE PAINT STENCILED ON RUBBER PANELS AT 1 YARD INCREMENTS MEASURED FROM THE ZERO POINT OF THE FIRING LINE. ACCURACY REQUIRED WITHIN 1/16".– REFER TO 3/IL507
43. OPEN ALL OF THE WAY THROUGH
44. GAS ANNUNCIATOR PANEL– BY DIV. 22
45. FORMALIN CONTAINER AND DISPENSING PUMP
46. PAINTED FIRING LINE– REFER TO DETAIL 3/IL507
47. FLUSHING FLOOR DRAIN–BY DIV. 22
48. CONTROLS FOR RANGE AIR HANDLING SYSTEM– DIV. 23
49. 36"L X 12" W X 1" THICK MAPLE WOOD SHELF MOUNT & 48" AFF–SPEC 123450
50. CW CONNECTION @ 48" A.F.F.–REFER TO PLUMB. VERIFY LOCATION BASED ON APPROVED SHOP DRAWINGS OF PRT
51. MANUAL OPERATED BLACKOUT SHADE–SPEC 122413
52. LOW ELEVATION EXHAUST– REFER TO MECHANICAL
53. BUG ZAPPER MOUNTED @ +84" A.F.F.–BY DIV 26 –SPEC 116000
54. HAMPER– NIC
55. 2–1/2" X 18" CORD SLOT
56. EXHAUST VENTS BY DISSECTING STATION MFR. (VERIFY 8"X24") –COORDINATE DUCTWORK WITH DIV. 23
57. ACID VENT PIPE– REFER TO DETAIL 2/IL500 AND MECHANICAL
58. ADJUSTABLE TOOL RACK–SPEC 114900 REFER TO DETAIL 4/IL507
59. 12"X12"X12" FLOOR SINK–BY DIV. 22
60. PRESSURE DIFFERENTIAL INDICATOR @ 54" AFF– BY DIV. 23
61. LEVEL 4 BULLET RESISTANT WINDOW & FRAME– SPEC 085653
62. DIRECT CONNECT EXHAUST– BY DIV. 23
63. DIGITAL READOUT FOR SCALE–SPEC 117810
64. ACID VENT DUCT– REFER TO TACDx ELEVATION ON IL004– BY DIV. 23
65. BELOW COUNTER RECEPTACLE RECESSED INTO SERVICE CLOSURE PANEL– REFER TO ELECTRICAL DRAWINGS.
66. TRENCH DRAIN– BY DIV. 22
67. USER CONTROLLED AIR FLOW SWITCH–BY DIV. 23
68. BULLET TRAP/RANGE SIGN MOUNTED AT 60" AFF TO BOTTOM–SPEC. 114900
69. PRT SIGN MOUNTED AT 60" AFF TO BOTTOM. –SPEC. 114900
70. WALL MOUNTED FLAT PANEL MONITOR–BY DIV. 27
71. COOLER CONTROL PANEL
72. IN–WALL FLUSH VALVE FOR FLUSHING FLOOR DRAINS – BY DIV. 22
73. EXISTING AMMO STORAGE SHELVING SYSTEM TO BE RELOCATED TO NEW FACILITY BY CONTRACTOR
74. BACKDRAFT EXHAUST GRILLE– BY DIV. 23 REFER TO MECH. FOR SIZE, MOUNT ABOVE COUNTERTOP BACKSPLASH
75. ADA COMPLIANT S.S. SINK–BY DIV. 22
76. REMOVABLE EVIDENCE RACK MOUNTED TO MOBILE TABLE–REFER TO DETAIL A8/IL501–SPEC 123450
77. UMBILICAL SERVICE CHASE–SPEC 123450
78. DIRECT CONNECT PRT TO CW
79. COMPRESSED AIR– BY DIV. 23
80. TYPE 3 RO WATER FAUCET– COUNTER MOUNTED
81. TYPE 1 DI WATER POLISHER– WALL MOUNTED
82. GLASS WALL PANEL–REFER TO ARCH.
83. HUB DRAIN FOR BODY FREEZER CONDENSATE BY DIV. 22
84. HUB DRAIN– BY DIV. 22
85. MONITOR AND INTERCOM TO OUTSIDE PEDESTAL – BY DIV. 26
86. S.S. WALL GUARD – REFER TO DET. 9/IL506. IN ROOMS 125, 125A AND 125B S.S. WALL GUARDS ARE TO BE BY COOLER MFR.
87. S.S. CORNER GUARD – REFER TO DET. 9/IL505
88. ADJUSTABLE DOCK LIGHT– BY DIV. 26
89. X–RAY ROOM TO BE R.F. SHIELDED PER QUALIFIED PHYSICIST CONSULTANT PRIOR TO CONSTRUCTION.
90. INTEGRAL COUNTERTOP SIDE SPLASH
91. MOP AND BROOM HOLDER RACK–SPEC. 116000
92. STEEL STRUCTURE TO SUPPORT DISSECTING STATION –BY STRUCTURAL ENGINEER
93. APPROXIMATE LOCATION OF EVAPORATING UNITS IN COLD ROOMS MOUNTED NEAR CEILING
94. SCALE POLE BRACKET–SPEC 117810
95. SPRAY HOSE ASSEMBLY – SPEC. 117800
96. MONITOR MOUNTED ON ARTICULATING SWIVEL ARM BRACKET–BY DIV. 27
97. HYDRO ASPIRATOR – SPEC. 117810
98. STUB FOR FUTURE DIRECT EXHAUST AND SNORKEL CONNECTION– BY DIV. 23
99. 3' H X 4' W MARKER BOARD–SPEC. 101100
100. ARTICULATING MARKER BOARD–SPEC 116000
101. S.S. SHELF – 12"L x 10"D
102. S.S. SHELF – 11"D, PROVIDE HOLE IN SHELF FOR SCALE POST AND ALIGN WITH SCALE POST BRACKET
103. MATCHING BACK DRAFT WALL VENTS SUPPLIED BY DISSECTION TABLE MFR SPEC 117810 – DIV. 23 WILL CONNECT THE EXHAUST.
104. 6" INTEGRAL WALL BASE– REFER TO FINISH SCHEDULE
105. INSTRUMENT DRAWER
106. DISPOSAL SWITCH
107. GFCI OUTLET W/ WEATHERPROOF COVER
108. 2 HP DISPOSAL– SPEC. 117810
109. END RINSE CONTROL VALVE
110. HW & CW MIXING FAUCET
111. EXHAUST VENTS BY DISSECTING STATION MFR. (8"X30") –COORDINATE DUCTWORK WITH DIV. 23
112. PASS THROUGH CABINET WITH VISION DOORS SPEC 116000– REFER TO DETAIL 2/IL508
113. ABOVE COUNTER RECEPTACLE RECESSED INTO SERVICE CLOSURE PANEL OR CHASE– REFER TO ELECTRICAL DRAWINGS.
114. STAINLESS STEEL CANOPY–BY DIV. 23
115. CURTAIN AND TRACK– BY DIV. 10
116. MARBLE TABLE – SPEC. 116000
117. TASK LIGHT– BY DIV. 26
118. LIQUID NITROGEN DEWAR, NIC
119. 1" DIA. HOLE W/CAP FOR DI WATER DELIVERY DEVICE.
120. (2) PADLOCK RACK MOUNTED ON WALL @54" AFF AND 48" AFF
121. EXHAUST VENTS TO BE HAVE OPPOSED BLADE DAMPER ACCESSIBLE TROUGH THE FACE OF THE GRILL FOR AIR BALANCING –BY DISSECTING TABLE MFR
122. POWER FROM BELOW– BY DIV. 26

CRSA
649 E. South Temple
Salt Lake City, UT 84102
801.355.5915

MWL
McClaren, Wilson & Lawrie, Inc.
11798 North Lakeridge Parkway
Ashland, Va 23005
(804)228.7465
www.mwlarchitects.com

State of Utah
Department of Administrative Services
Division of Facilities Construction & Management
4110 State Office Building
Salt Lake City, Utah 84114
Phone: (801) 538 - 3018
Fax: (801) 538 - 3267

DIVISION OF FACILITIES CONSTRUCTION AND MANAGEMENT
REVIEWED FOR CODE COMPLIANCE
SIGNATURE: Ernie Gelb
DATE: 08-05-2014

STATUS
Not For Construction

ARCHITECT-ENGINEER STAMP

KEY PLAN

Project #: B13-024

DATE:	REVISION:
APRIL 21, 2014	BID SET

CHECKED BY: B.CARVER
DRAWN BY: B.WARREN / A.VIG

2ND FLOOR ENLARGED LAB PLANS

IL105

VOLUME 1

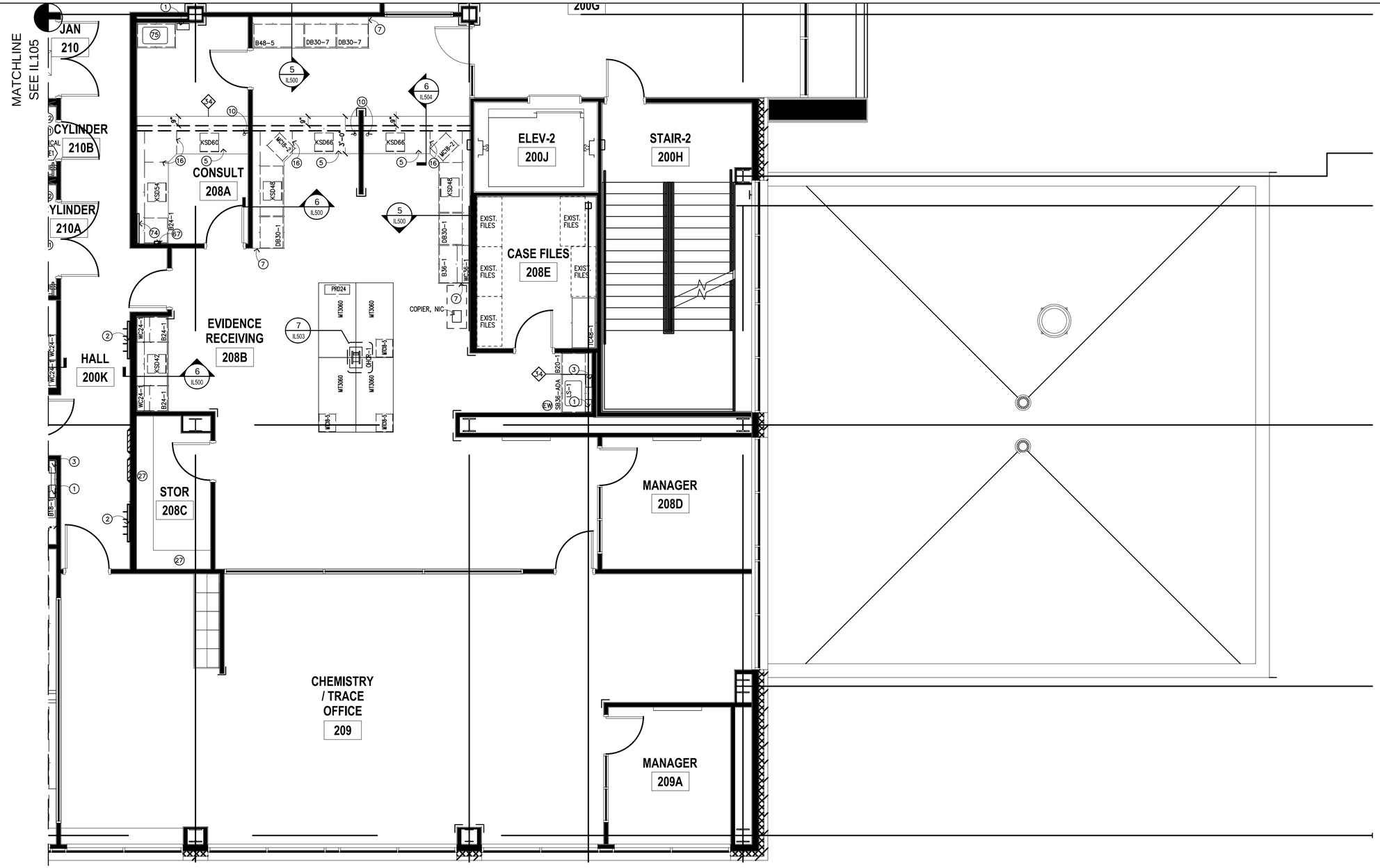

KEY SYMBOLS

- (L) LOCKING
- (M) MONITOR TO BMS
- (EW) DECK MOUNTED DRENCH HOSE EYEWASH FIXTURE
- (CA) COMPRESSED AIR
- (XXX) MARINE EDGE COUNTER ELEVATION IN INCHES
- (XX) NON-MARINE EDGE COUNTER ELEVATION IN INCHES
- (X) KEY NOTES
- (XX) EQUIPMENT
- [XXX] ROOM NUMBERS

ABBREVIATIONS

BFF	BELOW FINISHED FLOOR
HD	HUB DRAIN
FD	FLOOR DRAIN
FFD	FLUSHABLE FLOOR DRAIN
SS	STAINLESS STEEL

KEY NOTES

1. PAPER TOWEL DISPENSER– SPEC. 116000
2. COAT HOOKS MOUNTED @54" AFF–SPEC 116000
3. SAFETY SUPPLY CABINET–SPEC 116000
4. INLET PORT FOR HYDROGEN GENERATOR
5. OPEN TO FINISH WALL SURFACE
6. EPOXY DRYING RACK – 18"x36" – SPEC 123450
7. FILLER PANEL – MATCH CASEWORK MATERIAL
8. OMIT FRONT AND BACK APRON FOR 34" HIGH UNDER COUNTER EQUIPMENT.
9. SS SHELVING–SPEC 116000
10. 2 1/2" CORD GROMMET–SPEC 123450
11. CONTROL PANEL FOR FA7 (TARGET TROLLEY)
12. 2'X4' STAINLESS STEEL FOLD DOWN SURFACE – REFER TO DETAIL 8/IL507
13. COUNTERTOP MOUNTED COMPRESSED AIR (CA) TURRET
14. COLD WATER HOSE BIB @54" AFF– BY DIV. 22
15. HIGH DENSITY SHELVING– BY DIV. 10
16. KSSF SUPPORT FRAME– REFER TO DETAIL 9/IL500
17. HOT & COLD MIXING STATION–BY DIV. 22 (W/ 30' OF HOSE)
18. MOBILE LIFT PARK
19. UTILITY SINK– BY DIV. 22
20. UNDER COUNTER KNEE WALL SUPPORT –REFER TO ARCHITECTURAL
21. SPILL CART–SPEC 116000
22. SUPPORT LEG–BY DIV. 12
23. COAT RACK & SHELF–SPEC 116000
24. WALL MOUNTED PAPER ROLL DISPENSER WITH PLASTIC LAMINATE COVERED PLYWOOD BACKBOARD. 36"HX12"H MOUNTED AT 48" AFF TO BOTTOM.
25. DOUBLE KSSF– REFER TO DETAIL 1/IL509
26. ELEVATION TRANSITION POINT
27. MILLWORK–BY DIV. 6
28. FORMALIN SPIGOT
29. UNDERCOUNTER TYPE I WATER POLISHER–BY DIV. 22
30. ALL STAINLESS STEEL CASEWORK IN AUTOPSY SUITES WILL HAVE MARINE EDGE COUNTER TOPS.
31. GAS MANIFOLD @66" A.F.F. (BOTTOM) –BY DIV. 22
32. FLOOR DRAIN– BY DIV. 22
33. DISSECTION TABLE SHELF BY MFR
34. STAINLESS STEEL SCRUB SINK– BY DIV. 22
35. LEVEL 4 BULLET RESISTANT DOOR/FRAME–SPEC 083950
36. 'IN USE' LIGHT–DETAIL–1/IL507–BY DIV. 26
37. PUMP CONTROL FOR FORMALIN DISPENSOR
38. MAPLE COUNTER–2" THICK W/ 3/4" X 3 1/2" MAPLE BACK SPLASH W/ 4" LEADING EDGE OVERHANG– SPEC 123450
39. 8" DIA. EXHAUST DUCT FROM PROJECTILE RECOVERY TANK. DIV. 23 TO CONNECT EXHAUST
40. MOBILE DISSECTING WING–SPEC 117810
41. WALL MOUNTED LONG GUN RACK – REFER TO 3/IL508
42. PAINTED 3" NUMBER AND ARROW WHITE PAINT STENCILED ON RUBBER PANELS AT 1 YARD INCREMENTS MEASURED FROM THE ZERO POINT OF THE FIRING LINE. ACCURACY REQUIRED WITHIN 1/16".– REFER TO 3/IL507
43. OPEN ALL OF THE WAY THROUGH
44. GAS ANNUNCIATOR PANEL– BY DIV. 22
45. FORMALIN CONTAINER AND DISPENSING PUMP
46. PAINTED FIRING LINE– REFER TO DETAIL 3/IL507
47. FLUSHING FLOOR DRAIN–BY DIV. 22
48. CONTROLS FOR RANGE AIR HANDLING SYSTEM– DIV. 23
49. 36"L X 12" W X 1" THICK MAPLE WOOD SHELF MOUNT & 48" AFF–SPEC 123450
50. CW CONNECTION @ 48" A.F.F.–REFER TO PLUMB. VERIFY LOCATION BASED ON APPROVED SHOP DRAWINGS OF PRT
51. MANUAL OPERATED BLACKOUT SHADE–SPEC 122413
52. LOW ELEVATION EXHAUST– REFER TO MECHANICAL
53. BUG ZAPPER MOUNTED @ +84" A.F.F.–BY DIV 26 –SPEC 116000
54. HAMPER– NIC
55. 2–1/2" X 18" CORD SLOT
56. EXHAUST VENTS BY DISSECTING STATION MFR. (VERIFY 8"X24") –COORDINATE DUCTWORK WITH DIV. 23
57. ACID VENT PIPE– REFER TO DETAIL 2/IL500 AND MECHANICAL
58. ADJUSTABLE TOOL RACK–SPEC 114900 REFER TO DETAIL 4/IL507
59. 12"X12"X12" FLOOR SINK–BY DIV. 22
60. PRESSURE DIFFERENTIAL INDICATOR @ 54" AFF– BY DIV. 23
61. LEVEL 4 BULLET RESISTANT WINDOW & FRAME– SPEC 085653
62. DIRECT CONNECT EXHAUST– BY DIV. 23
63. DIGITAL READOUT FOR SCALE–SPEC 117810
64. ACID VENT DUCT– REFER TO TACDx ELEVATION ON IL004– BY DIV. 23
65. BELOW COUNTER RECEPTACLE RECESSED INTO SERVICE CLOSURE PANEL– REFER TO ELECTRICAL DRAWINGS.
66. TRENCH DRAIN– BY DIV. 22
67. USER CONTROLLED AIR FLOW SWITCH–BY DIV. 23
68. BULLET TRAP/RANGE SIGN MOUNTED AT 60" AFF TO BOTTOM–SPEC. 114900
69. PRT SIGN MOUNTED AT 60" AFF TO BOTTOM. –SPEC. 114900
70. WALL MOUNTED FLAT PANEL MONITOR–BY DIV. 27
71. COOLER CONTROL PANEL
72. IN–WALL FLUSH VALVE FOR FLUSHING FLOOR DRAINS – BY DIV. 22
73. EXISTING AMMO STORAGE SHELVING SYSTEM TO BE RELOCATED TO NEW FACILITY BY CONTRACTOR
74. BACKDRAFT EXHAUST GRILLE– BY DIV. 23 REFER TO MECH. FOR SIZE, MOUNT ABOVE COUNTERTOP BACKSPLASH
75. ADA COMPLIANT S.S. SINK–BY DIV. 22
76. REMOVABLE EVIDENCE RACK MOUNTED TO MOBILE TABLE–REFER TO DETAIL A8/IL501–SPEC 123450
77. UMBILICAL SERVICE CHASE–SPEC 123450
78. DIRECT CONNECT PRT TO CW
79. COMPRESSED AIR– BY DIV. 23
80. TYPE 3 RO WATER FAUCET– COUNTER MOUNTED
81. TYPE 1 DI WATER POLISHER– WALL MOUNTED
82. GLASS WALL PANEL–REFER TO ARCH.
83. HUB DRAIN FOR BODY FREEZER CONDENSATE BY DIV. 22
84. HUB DRAIN– BY DIV. 22
85. MONITOR AND INTERCOM TO OUTSIDE PEDESTAL – BY DIV. 26
86. S.S. WALL GUARD – REFER TO DET. 9/IL506. IN ROOMS 125, 125A AND 125B S.S. WALL GUARDS ARE TO BE BY COOLER MFR.
87. S.S. CORNER GUARD – REFER TO DET. 9/IL505
88. ADJUSTABLE DOCK LIGHT– BY DIV. 26
89. X–RAY ROOM TO BE R.F. SHIELDED PER QUALIFIED PHYSICIST CONSULTANT PRIOR TO CONSTRUCTION.
90. INTEGRAL COUNTERTOP SIDE SPLASH
91. MOP AND BROOM HOLDER RACK–SPEC. 116000
92. STEEL STRUCTURE TO SUPPORT DISSECTING STATION –BY STRUCTURAL ENGINEER
93. APPROXIMATE LOCATION OF EVAPORATING UNITS IN COLD ROOMS MOUNTED NEAR CEILING
94. SCALE POLE BRACKET–SPEC 117810
95. SPRAY HOSE ASSEMBLY – SPEC. 117800
96. MONITOR MOUNTED ON ARTICULATING SWIVEL ARM BRACKET–BY DIV. 27
97. HYDRO ASPIRATOR – SPEC. 117810
98. STUB FOR FUTURE DIRECT EXHAUST AND SNORKEL CONNECTION– BY DIV. 23
99. 3' H X 4' W MARKER BOARD–SPEC. 101100
100. ARTICULATING MARKER BOARD–SPEC 116000
101. S.S. SHELF – 12"L x 10"D
102. S.S. SHELF – 11"D, PROVIDE HOLE IN SHELF FOR SCALE POST AND ALIGN WITH SCALE POST BRACKET
103. MATCHING BACK DRAFT WALL VENTS SUPPLIED BY DISSECTION TABLE MFR SPEC 117810 – DIV. 23 WILL CONNECT THE EXHAUST.
104. 6" INTEGRAL WALL BASE– REFER TO FINISH SCHEDULE
105. INSTRUMENT DRAWER
106. DISPOSAL SWITCH
107. GFCI OUTLET W/ WEATHERPROOF COVER
108. 2 HP DISPOSAL– SPEC. 117810
109. END RINSE CONTROL VALVE
110. HW & CW MIXING FAUCET
111. EXHAUST VENTS BY DISSECTING STATION MFR. (8"X30") –COORDINATE DUCTWORK WITH DIV. 23
112. PASS THROUGH CABINET WITH VISION DOORS SPEC 116000– REFER TO DETAIL 2/IL508
113. ABOVE COUNTER RECEPTACLE RECESSED INTO SERVICE CLOSURE PANEL OR CHASE– REFER TO ELECTRICAL DRAWINGS.
114. STAINLESS STEEL CANOPY–BY DIV. 23
115. CURTAIN AND TRACK– BY DIV. 10
116. MARBLE TABLE – SPEC. 116000
117. TASK LIGHT– BY DIV. 26
118. LIQUID NITROGEN DEWAR, NIC
119. 1" DIA. HOLE W/CAP FOR DI WATER DELIVERY DEVICE.
120. (2) PADLOCK RACK MOUNTED ON WALL @54" AFF AND 48" AFF
121. EXHAUST VENTS TO BE HAVE OPPOSED BLADE DAMPER ACCESSIBLE THROUGH THE FACE OF THE GRILL FOR AIR BALANCING –BY DISSECTING TABLE MFR
122. POWER FROM BELOW– BY DIV. 26

CRSA
649 E. South Temple
Salt Lake City, UT 84102
801.355.5915

MWL
McClaren, Wilson & Lawrie, Inc.
11798 North Lakeridge Parkway
Ashland, Va 23005
(804)228.7465
www.mwlarchitects.com

State of Utah
Department of Administrative Services
Division of Facilities Construction & Management
4110 State Office Building
Salt Lake City, Utah 84114
Phone: (801) 538 - 3018
Fax: (801) 538 - 3267

DIVISION OF FACILITIES CONSTRUCTION AND MANAGEMENT
REVIEWED FOR CODE COMPLIANCE
SIGNATURE:
DATE: 08-05-2014

STATUS
Not For Construction

ARCHITECT-ENGINEER STAMP

KEY PLAN

Project #: B13-024

DATE:	REVISION:
APRIL 21, 2014	BID SET

CHECKED BY	B.CARVER
DRAWN BY	B.WARREN / A.VIG

2ND FLOOR ENLARGED LAB PLANS

IL106

VOLUME 1

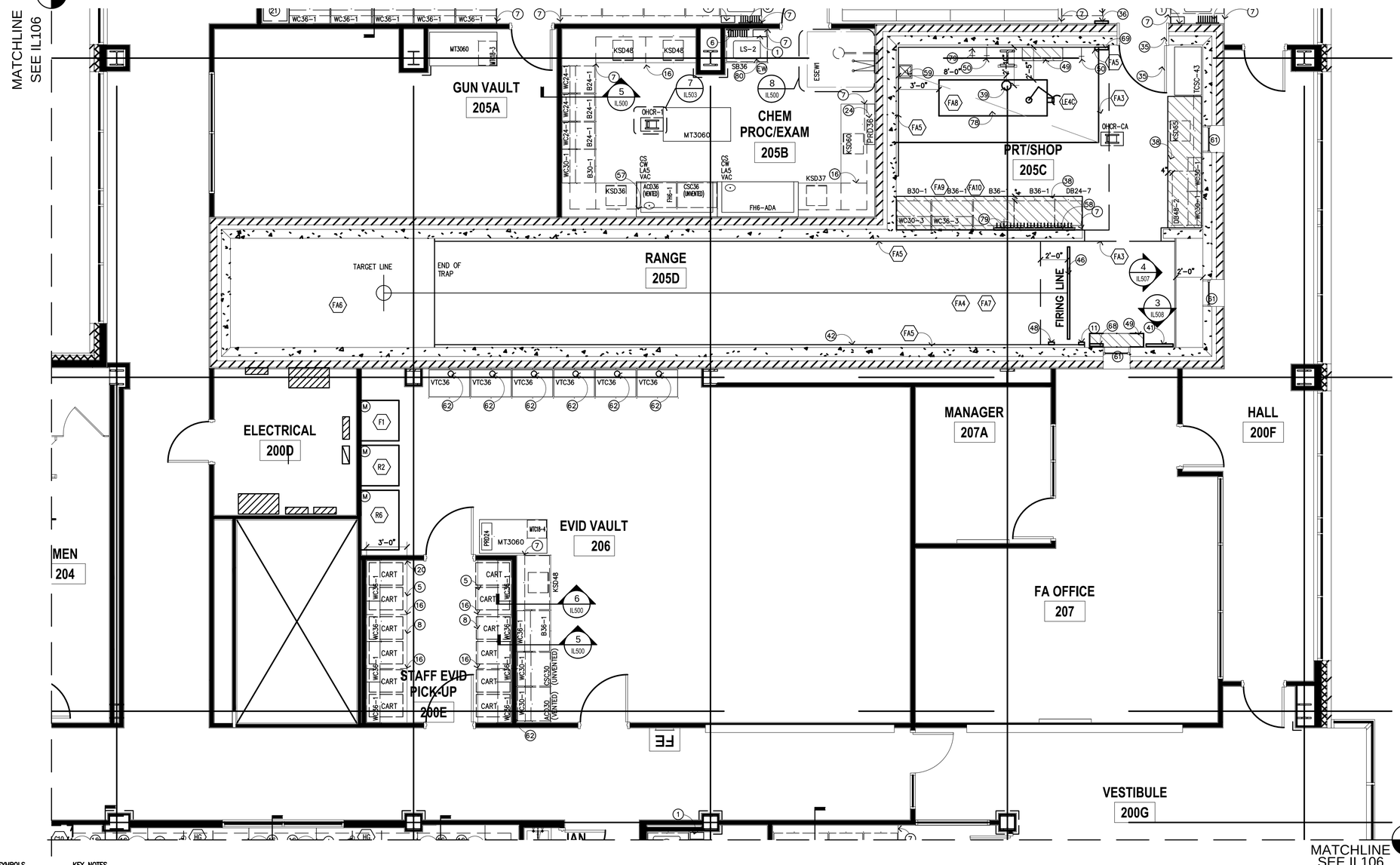

KEY SYMBOLS

- (L) LOCKING
- (M) MONITOR TO BMS
- (EW) DECK MOUNTED DRENCH HOSE EYEWASH FIXTURE
- (CA) COMPRESSED AIR
- (XX) MARINE EDGE COUNTER ELEVATION IN INCHES
- (XX) NON-MARINE EDGE COUNTER ELEVATION IN INCHES
- (X) KEY NOTES
- (XX) EQUIPMENT
- XXX ROOM NUMBERS

ABBREVIATIONS

BFF	BELOW FINISHED FLOOR
HD	HUB DRAIN
FD	FLOOR DRAIN
FFD	FLUSHABLE FLOOR DRAIN
SS	STAINLESS STEEL

KEY NOTES

1. PAPER TOWEL DISPENSER– SPEC. 116000
2. COAT HOOKS MOUNTED @54" AFF–SPEC 116000
3. SAFETY SUPPLY CABINET–SPEC 116000
4. INLET PORT FOR HYDROGEN GENERATOR
5. OPEN TO FINISH WALL SURFACE
6. EPOXY DRYING RACK – 18"x36" – SPEC 123450
7. FILLER PANEL – MATCH CASEWORK MATERIAL
8. OMIT FRONT AND BACK APRON FOR 34" HIGH UNDER COUNTER EQUIPMENT.
9. SS SHELVING–SPEC 116000
10. 2 1/2" CORD GROMMET–SPEC 123450
11. CONTROL PANEL FOR FA7 (TARGET TROLLEY)
12. 2'X4' STAINLESS STEEL FOLD DOWN SURFACE – REFER TO DETAIL 8/IL507
13. COUNTERTOP MOUNTED COMPRESSED AIR (CA) TURRET
14. COLD WATER HOSE BIB @54" AFF– BY DIV. 22
15. HIGH DENSITY SHELVING– BY DIV. 10
16. KSSF SUPPORT FRAME– REFER TO DETAIL 9/IL500
17. HOT & COLD MIXING STATION–BY DIV. 22 (W/ 30' OF HOSE)
18. MOBILE LIFT PARK
19. UTILITY SINK– BY DIV. 22
20. UNDER COUNTER KNEE WALL SUPPORT –REFER TO ARCHITECTURAL
21. SPILL CART–SPEC 116000
22. SUPPORT LEG–BY DIV. 12
23. COAT RACK & SHELF–SPEC 116000
24. WALL MOUNTED PAPER ROLL DISPENSER WITH PLASTIC LAMINATE COVERED PLYWOOD BACKBOARD. 36"H X12"H MOUNTED AT 48" AFF TO BOTTOM.
25. DOUBLE KSSF– REFER TO DETAIL 1/IL509
26. ELEVATION TRANSITION POINT
27. MILLWORK–BY DIV. 6
28. FORMALIN SPIGOT
29. UNDERCOUNTER TYPE I WATER POLISHER–BY DIV. 22
30. ALL STAINLESS STEEL CASEWORK IN AUTOPSY SUITES WILL HAVE MARINE EDGE COUNTER TOPS.
31. GAS MANIFOLD @66" A.F.F. (BOTTOM) –BY DIV. 22
32. FLOOR DRAIN– BY DIV. 22
33. DISSECTION TABLE SHELF BY MFR
34. STAINLESS STEEL SCRUB SINK– BY DIV. 22
35. LEVEL 4 BULLET RESISTANT DOOR/FRAME–SPEC 083950
36. 'IN USE' LIGHT–DETAIL–1/IL507–BY DIV. 26
37. PUMP CONTROL FOR FORMALIN DISPENSOR
38. MAPLE COUNTER–2" THICK W/ 3/4" X 3 1/2" MAPLE BACK SPLASH W/ 4" LEADING EDGE OVERHANG– SPEC 123450 –SPEC 116000
39. 8" DIA. EXHAUST DUCT FROM PROJECTILE RECOVERY TANK. DIV. 23 TO CONNECT EXHAUST
40. MOBILE DISSECTING WING–SPEC 117810
41. WALL MOUNTED LONG GUN RACK – REFER TO 3/IL508
42. PAINTED 3" NUMBER AND ARROW WHITE PAINT STENCILED ON RUBBER PANELS AT 1 YARD INCREMENTS MEASURED FROM THE ZERO POINT OF THE FIRING LINE. ACCURACY REQUIRED WITHIN 1/16".– REFER TO 3/IL507
43. OPEN ALL OF THE WAY THROUGH
44. GAS ANNUNCIATOR PANEL– BY DIV. 22
45. FORMALIN CONTAINER AND DISPENSING PUMP
46. PAINTED FIRING LINE– REFER TO DETAIL 3/IL507
47. FLUSHING FLOOR DRAIN–BY DIV. 22
48. CONTROLS FOR RANGE AIR HANDLING SYSTEM– DIV. 23
49. 36"L X 12" W X 1" THICK MAPLE WOOD SHELF MOUNT & 48" AFF–SPEC 123450
50. CW CONNECTION @ 48" A.F.F.–REFER TO PLUMB. VERIFY LOCATION BASED ON APPROVED SHOP DRAWINGS OF PRT
51. MANUAL OPERATED BLACKOUT SHADE–SPEC 122413
52. LOW ELEVATION EXHAUST– REFER TO MECHANICAL
53. BUG ZAPPER MOUNTED @ +84" A.F.F.–BY DIV 26 –SPEC 116000
54. HAMPER– NIC
55. 2–1/2" X 18" CORD SLOT
56. EXHAUST VENTS BY DISSECTING STATION MFR. (VERIFY 8"X24") –COORDINATE DUCTWORK WITH DIV. 23
57. ACID VENT PIPE– REFER TO DETAIL 2/IL500 AND MECHANICAL
58. ADJUSTABLE TOOL RACK–SPEC 114900 REFER TO DETAIL 4/IL507
59. 12"X12"X12" FLOOR SINK–BY DIV. 22
60. PRESSURE DIFFERENTIAL INDICATOR @ 54" AFF– BY DIV. 23
61. LEVEL 4 BULLET RESISTANT WINDOW & FRAME– SPEC 085653
62. DIRECT CONNECT EXHAUST– BY DIV. 23
63. DIGITAL READOUT FOR SCALE–SPEC 117810
64. ACID VENT DUCT– REFER TO TACDx ELEVATION ON IL004– BY DIV. 23
65. BELOW COUNTER RECEPTACLE RECESSED INTO SERVICE CLOSURE PANEL– REFER TO ELECTRICAL DRAWINGS.
66. TRENCH DRAIN– BY DIV. 22
67. USER CONTROLLED AIR FLOW SWITCH–BY DIV. 23
68. BULLET TRAP/RANGE SIGN MOUNTED AT 60" AFF TO BOTTOM–SPEC. 114900
69. PRT SIGN MOUNTED AT 60" AFF TO BOTTOM. –SPEC. 114900
70. WALL MOUNTED FLAT PANEL MONITOR–BY DIV. 27
71. COOLER CONTROL PANEL
72. IN–WALL FLUSH VALVE FOR FLUSHING FLOOR DRAINS – BY DIV. 22
73. EXISTING AMMO STORAGE SHELVING SYSTEM TO BE RELOCATED TO NEW FACILITY BY CONTRACTOR
74. BACKDRAFT EXHAUST GRILLE– BY DIV. 23 REFER TO MECH. FOR SIZE, MOUNT ABOVE COUNTERTOP BACKSPLASH
75. ADA COMPLIANT S.S. SINK–BY DIV. 22
76. REMOVABLE EVIDENCE RACK MOUNTED TO MOBILE TABLE–REFER TO DETAIL A8/IL501–SPEC 123450
77. UMBILICAL SERVICE CHASE–SPEC 123450
78. DIRECT CONNECT PRT TO CW
79. COMPRESSED AIR– BY DIV. 23
80. TYPE 3 RO WATER FAUCET– COUNTER MOUNTED
81. TYPE 1 DI WATER POLISHER– WALL MOUNTED
82. GLASS WALL PANEL–REFER TO ARCH.
83. HUB DRAIN FOR BODY FREEZER CONDENSATE BY DIV. 22
84. HUB DRAIN– BY DIV. 22
85. MONITOR AND INTERCOM TO OUTSIDE PEDESTAL – BY DIV. 26
86. S.S. WALL GUARD – REFER TO DET. 9/IL506. IN ROOMS 125, 125A AND 125B S.S. WALL GUARDS ARE TO BE BY COOLER MFR.
87. S.S. CORNER GUARD – REFER TO DET. 9/IL505
88. ADJUSTABLE DOCK LIGHT– BY DIV. 26
89. X–RAY ROOM TO BE R.F. SHIELDED PER QUALIFIED PHYSICIST CONSULTANT PRIOR TO CONSTRUCTION.
90. INTEGRAL COUNTERTOP SIDE SPLASH
91. MOP AND BROOM HOLDER RACK–SPEC. 116000
92. STEEL STRUCTURE TO SUPPORT DISSECTING STATION –BY STRUCTURAL ENGINEER
93. APPROXIMATE LOCATION OF EVAPORATING UNITS IN COLD ROOMS MOUNTED NEAR CEILING
94. SCALE POLE BRACKET–SPEC 117810
95. SPRAY HOSE ASSEMBLY – SPEC. 117800
96. MONITOR MOUNTED ON ARTICULATING SWIVEL ARM BRACKET–BY DIV. 27
97. HYDRO ASPIRATOR – SPEC. 117810
98. STUB FOR FUTURE DIRECT EXHAUST AND SNORKEL CONNECTION– BY DIV. 23
99. 3' H X 4' W MARKER BOARD–SPEC. 101100
100. ARTICULATING MARKER BOARD–SPEC 116000
101. S.S. SHELF – 12"L x 10"D
102. S.S. SHELF – 11"D, PROVIDE HOLE IN SHELF FOR SCALE POST AND ALIGN WITH SCALE POST BRACKET
103. MATCHING BACK DRAFT WALL VENTS SUPPLIED BY DISSECTION TABLE MFR SPEC 117810 – DIV. 23 WILL CONNECT THE EXHAUST.
104. 6" INTEGRAL WALL BASE– REFER TO FINISH SCHEDULE
105. INSTRUMENT DRAWER
106. DISPOSAL SWITCH
107. GFCI OUTLET W/ WEATHERPROOF COVER
108. 2 HP DISPOSAL– SPEC. 117810
109. END RINSE CONTROL VALVE
110. HW & CW MIXING FAUCET
111. EXHAUST VENTS BY DISSECTING STATION MFR. (8"X30") –COORDINATE DUCTWORK WITH DIV. 23
112. PASS THROUGH CABINET WITH VISION DOORS SPEC 116000– REFER TO DETAIL 2/IL508
113. ABOVE COUNTER RECEPTACLE RECESSED INTO SERVICE CLOSURE PANEL OR CHASE– REFER TO ELECTRICAL DRAWINGS.
114. STAINLESS STEEL CANOPY–BY DIV. 23
115. CURTAIN AND TRACK– BY DIV. 10
116. MARBLE TABLE – SPEC. 116000
117. TASK LIGHT– BY DIV. 26
118. LIQUID NITROGEN DEWAR, NIC
119. 1" DIA. HOLE W/CAP FOR DI WATER DELIVERY DEVICE.
120. (2) PADLOCK RACK MOUNTED ON WALL @54" AFF AND 48" AFF
121. EXHAUST VENTS TO BE HAVE OPPOSED BLADE DAMPER ACCESSIBLE TROUGH THE FACE OF THE GRILL FOR AIR BALANCING –BY DISSECTING TABLE MFR
122. POWER FROM BELOW– BY DIV. 26

CRSA
649 E. South Temple
Salt Lake City, UT 84102
801.355.5915

MWL
McClaren, Wilson & Lawrie, Inc.
11798 North Lakeridge Parkway
Ashland, Va 23005
(804)228.7465
www.mwlarchitects.com

State of Utah
Department of Administrative Services
Division of Facilities Construction & Management
4110 State Office Building
Salt Lake City, Utah 84114
Phone: (801) 538 - 3018
Fax: (801) 538 - 3267

DIVISION OF FACILITIES CONSTRUCTION AND MANAGEMENT
REVIEWED FOR CODE COMPLIANCE
SIGNATURE:
DATE: 08-05-2014

STATUS
Not For Construction

ARCHITECT-ENGINEER STAMP

KEY PLAN

Project #: B13-024

DATE:	REVISION:
APRIL 21, 2014	BID SET
CHECKED BY	B.CARVER
DRAWN BY	B.WARREN / A.VIG

2ND FLOOR ENLARGED LAB PLANS

IL107

VOLUME 1

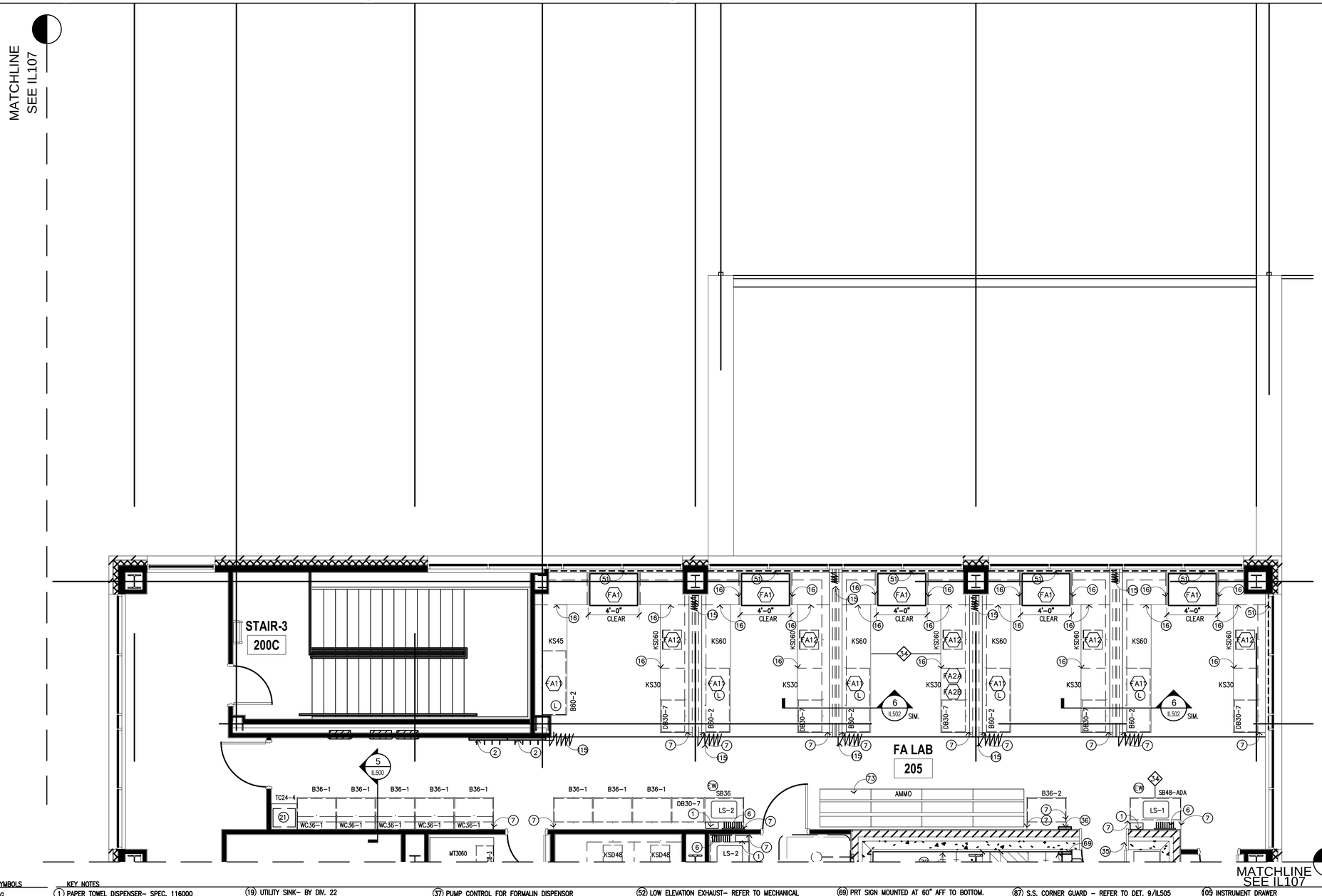

KEY SYMBOLS

- (L) LOCKING
- (M) MONITOR TO BMS
- (EW) DECK MOUNTED DRENCH HOSE EYEWASH FIXTURE
- (CA) COMPRESSED AIR
- (XXX) MARINE EDGE COUNTER ELEVATION IN INCHES
- (XX) NON-MARINE EDGE COUNTER ELEVATION IN INCHES
- (X) KEY NOTES
- (XX) EQUIPMENT
- XXX ROOM NUMBERS

ABBREVIATIONS

BFF	BELOW FINISHED FLOOR
HD	HUB DRAIN
FD	FLOOR DRAIN
FFD	FLUSHABLE FLOOR DRAIN
SS	STAINLESS STEEL

KEY NOTES

1. PAPER TOWEL DISPENSER- SPEC. 116000
2. COAT HOOKS MOUNTED @54" AFF-SPEC 116000
3. SAFETY SUPPLY CABINET-SPEC 116000
4. INLET PORT FOR HYDROGEN GENERATOR
5. OPEN TO FINISH WALL SURFACE
6. EPOXY DRYING RACK – 18"x36" – SPEC 123450
7. FILLER PANEL – MATCH CASEWORK MATERIAL
8. OMIT FRONT AND BACK APRON FOR 34" HIGH UNDER COUNTER EQUIPMENT.
9. SS SHELVING-SPEC 116000
10. 2 1/2" CORD GROMMET-SPEC 123450
11. CONTROL PANEL FOR FA7 (TARGET TROLLEY)
12. 2'X4' STAINLESS STEEL FOLD DOWN SURFACE – REFER TO DETAIL 8/IL507
13. COUNTERTOP MOUNTED COMPRESSED AIR (CA) TURRET
14. COLD WATER HOSE BIB @54" AFF- BY DIV. 22
15. HIGH DENSITY SHELVING- BY DIV. 10
16. KSSF SUPPORT FRAME- REFER TO DETAIL 9/IL500
17. HOT & COLD MIXING STATION-BY DIV. 22 (W/ 30' OF HOSE)
18. MOBILE LIFT PARK
19. UTILITY SINK- BY DIV. 22
20. UNDER COUNTER KNEE WALL SUPPORT –REFER TO ARCHITECTURAL
21. SPILL CART-SPEC 116000
22. SUPPORT LEG-BY DIV. 12
23. COAT RACK & SHELF-SPEC 116000
24. WALL MOUNTED PAPER ROLL DISPENSER WITH PLASTIC LAMINATE COVERED PLYWOOD BACKBOARD. 36"HX12"H MOUNTED AT 48" AFF TO BOTTOM.
25. DOUBLE KSSF- REFER TO DETAIL 1/IL509
26. ELEVATION TRANSITION POINT
27. MILLWORK-BY DIV. 6
28. FORMALIN SPIGOT
29. UNDERCOUNTER TYPE I WATER POLISHER-BY DIV. 22
30. ALL STAINLESS STEEL CASEWORK IN AUTOPSY SUITES WILL HAVE MARINE EDGE COUNTER TOPS.
31. GAS MANIFOLD @66" A.F.F. (BOTTOM) –BY DIV. 22
32. FLOOR DRAIN- BY DIV. 22
33. DISSECTION TABLE SHELF BY MFR
34. STAINLESS STEEL SCRUB SINK- BY DIV. 22
35. LEVEL 4 BULLET RESISTANT DOOR/FRAME-SPEC 083950
36. 'IN USE' LIGHT-DETAIL-1/IL507-BY DIV. 26
37. PUMP CONTROL FOR FORMALIN DISPENSOR
38. MAPLE COUNTER-2" THICK W/ 3/4" X 3 1/2" MAPLE BACK SPLASH W/ 4" LEADING EDGE OVERHANG- SPEC 123450
39. 8" DIA. EXHAUST DUCT FROM PROJECTILE RECOVERY TANK. DIV. 23 TO CONNECT EXHAUST
40. MOBILE DISSECTING WING-SPEC 117810
41. WALL MOUNTED LONG GUN RACK – REFER TO 3/IL508
42. PAINTED 3" NUMBER AND ARROW WHITE PAINT STENCILED ON RUBBER PANELS AT 1 YARD INCREMENTS MEASURED FROM THE ZERO POINT OF THE FIRING LINE. ACCURACY REQUIRED WITHIN 1/16".– REFER TO 3/IL507
43. OPEN ALL OF THE WAY THROUGH
44. GAS ANNUNCIATOR PANEL– BY DIV. 22
45. FORMALIN CONTAINER AND DISPENSING PUMP
46. PAINTED FIRING LINE– REFER TO DETAIL 3/IL507
47. FLUSHING FLOOR DRAIN-BY DIV. 22
48. CONTROLS FOR RANGE AIR HANDLING SYSTEM- DIV. 23
49. 36"L X 12" W X 1" THICK MAPLE WOOD SHELF MOUNT & 48" AFF-SPEC 123450
50. CW CONNECTION @ 48" A.F.F.–REFER TO PLUMB. VERIFY LOCATION BASED ON APPROVED SHOP DRAWINGS OF PRT
51. MANUAL OPERATED BLACKOUT SHADE-SPEC 122413
52. LOW ELEVATION EXHAUST– REFER TO MECHANICAL
53. BUG ZAPPER MOUNTED @ +84" A.F.F.–BY DIV 26 –SPEC 116000
54. HAMPER– NIC
55. 2-1/2" X 18" CORD SLOT
56. EXHAUST VENTS BY DISSECTING STATION MFR. (VERIFY 8"X24") –COORDINATE DUCTWORK WITH DIV. 23
57. ACID VENT PIPE– REFER TO DETAIL 2/IL500 AND MECHANICAL
58. ADJUSTABLE TOOL RACK-SPEC 114900 REFER TO DETAIL 4/IL507
59. 12"X12"X12" FLOOR SINK-BY DIV. 22
60. PRESSURE DIFFERENTIAL INDICATOR @ 54" AFF– BY DIV. 23
61. LEVEL 4 BULLET RESISTANT WINDOW & FRAME– SPEC 085653
62. DIRECT CONNECT EXHAUST– BY DIV. 23
63. DIGITAL READOUT FOR SCALE-SPEC 117810
64. ACID VENT DUCT– REFER TO TACDx ELEVATION ON IL004– BY DIV. 23
65. BELOW COUNTER RECEPTACLE RECESSED INTO SERVICE CLOSURE PANEL– REFER TO ELECTRICAL DRAWINGS.
66. TRENCH DRAIN– BY DIV. 22
67. USER CONTROLLED AIR FLOW SWITCH–BY DIV. 23
68. BULLET TRAP/RANGE SIGN MOUNTED AT 60" AFF TO BOTTOM-SPEC. 114900
69. PRT SIGN MOUNTED AT 60" AFF TO BOTTOM. –SPEC. 114900
70. WALL MOUNTED FLAT PANEL MONITOR–BY DIV. 27
71. COOLER CONTROL PANEL
72. IN-WALL FLUSH VALVE FOR FLUSHING FLOOR DRAINS – BY DIV. 22
73. EXISTING AMMO STORAGE SHELVING SYSTEM TO BE RELOCATED TO NEW FACILITY BY CONTRACTOR
74. BACKDRAFT EXHAUST GRILLE– BY DIV. 23 REFER TO MECH. FOR SIZE, MOUNT ABOVE COUNTERTOP BACKSPLASH
75. ADA COMPLIANT S.S. SINK–BY DIV. 22
76. REMOVABLE EVIDENCE RACK MOUNTED TO MOBILE TABLE–REFER TO DETAIL A8/IL501–SPEC 123450
77. UMBILICAL SERVICE CHASE–SPEC 123450
78. DIRECT CONNECT PRT TO CW
79. COMPRESSED AIR– BY DIV. 23
80. TYPE 3 RO WATER FAUCET– COUNTER MOUNTED
81. TYPE 1 DI WATER POLISHER– WALL MOUNTED
82. GLASS WALL PANEL–REFER TO ARCH.
83. HUB DRAIN FOR BODY FREEZER CONDENSATE BY DIV. 22
84. HUB DRAIN– BY DIV. 22
85. MONITOR AND INTERCOM TO OUTSIDE PEDESTAL – BY DIV. 26
86. S.S. WALL GUARD – REFER TO DET. 9/IL506. IN ROOMS 125, 125A AND 125B S.S. WALL GUARDS ARE TO BE BY COOLER MFR.
87. S.S. CORNER GUARD – REFER TO DET. 9/IL505
88. ADJUSTABLE DOCK LIGHT– BY DIV. 26
89. X-RAY ROOM TO BE R.F. SHIELDED PER QUALIFIED PHYSICIST CONSULTANT PRIOR TO CONSTRUCTION.
90. INTEGRAL COUNTERTOP SIDE SPLASH
91. MOP AND BROOM HOLDER RACK–SPEC. 116000
92. STEEL STRUCTURE TO SUPPORT DISSECTING STATION –BY STRUCTURAL ENGINEER
93. APPROXIMATE LOCATION OF EVAPORATING UNITS IN COLD ROOMS MOUNTED NEAR CEILING
94. SCALE POLE BRACKET–SPEC 117810
95. SPRAY HOSE ASSEMBLY – SPEC. 117800
96. MONITOR MOUNTED ON ARTICULATING SWIVEL ARM BRACKET–BY DIV. 27
97. HYDRO ASPIRATOR – SPEC. 117810
98. STUB FOR FUTURE DIRECT EXHAUST AND SNORKEL CONNECTION– BY DIV. 23
99. 3" H X 4" W MARKER BOARD–SPEC. 101100
100. ARTICULATING MARKER BOARD–SPEC 116000
101. S.S. SHELF – 12"L x 10"D
102. S.S. SHELF – 11"D, PROVIDE HOLE IN SHELF FOR SCALE POST AND ALIGN WITH SCALE POST BRACKET
103. MATCHING BACK DRAFT WALL VENTS SUPPLIED BY DISSECTION TABLE MFR SPEC 117810 – DIV. 23 WILL CONNECT THE EXHAUST.
104. 6" INTEGRAL WALL BASE– REFER TO FINISH SCHEDULE
105. INSTRUMENT DRAWER
106. DISPOSAL SWITCH
107. GFCI OUTLET W/ WEATHERPROOF COVER
108. 2 HP DISPOSAL– SPEC. 117810
109. END RINSE CONTROL VALVE
110. HW & CW MIXING FAUCET
111. EXHAUST VENTS BY DISSECTING STATION MFR. (8"X30") –COORDINATE DUCTWORK WITH DIV. 23
112. PASS THROUGH CABINET WITH VISION DOORS SPEC. 116000– REFER TO DETAIL 2/IL508
113. ABOVE COUNTER RECEPTACLE RECESSED INTO SERVICE CLOSURE PANEL OR CHASE– REFER TO ELECTRICAL DRAWINGS.
114. STAINLESS STEEL CANOPY–BY DIV. 23
115. CURTAIN AND TRACK– BY DIV. 10
116. MARBLE TABLE – SPEC. 116000
117. TASK LIGHT– BY DIV. 26
118. LIQUID NITROGEN DEWAR, NIC
119. 1" DIA. HOLE W/CAP FOR DI WATER DELIVERY DEVICE.
120. (2) PADLOCK RACK MOUNTED ON WALL @54" AFF AND 48" AFF
121. EXHAUST VENTS TO BE HAVE OPPOSED BLADE DAMPER ACCESSIBLE TROUGH THE FACE OF THE GRILL FOR AIR BALANCING –BY DISSECTING TABLE MFR
122. POWER FROM BELOW– BY DIV. 26

CRSA
649 E. South Temple
Salt Lake City, UT 84102
801.355.5915

MWL
McClaren, Wilson & Lawrie, Inc.
11798 North Lakeridge Parkway
Ashland, Va 23005
(804)228.7465
www.mwlarchitects.com

State of Utah
Department of Administrative Services
Division of Facilities Construction & Management
4110 State Office Building
Salt Lake City, Utah 84114
Phone: (801) 538 - 3018
Fax: (801) 538 - 3267

DIVISION OF FACILITIES CONSTRUCTION AND MANAGEMENT
REVIEWED FOR CODE COMPLIANCE
SIGNATURE:
DATE: 08-05-2014

DFCM APPROVAL STAMP

STATUS
Not For Construction

ARCHITECT-ENGINEER STAMP

KEY PLAN

Project #: B13-024

DATE:	REVISION:
APRIL 21, 2014	BID SET

CHECKED BY	B.CARVER
DRAWN BY	B.WARREN / A.VIG

2ND FLOOR ENLARGED LAB PLANS

IL108

VOLUME 1

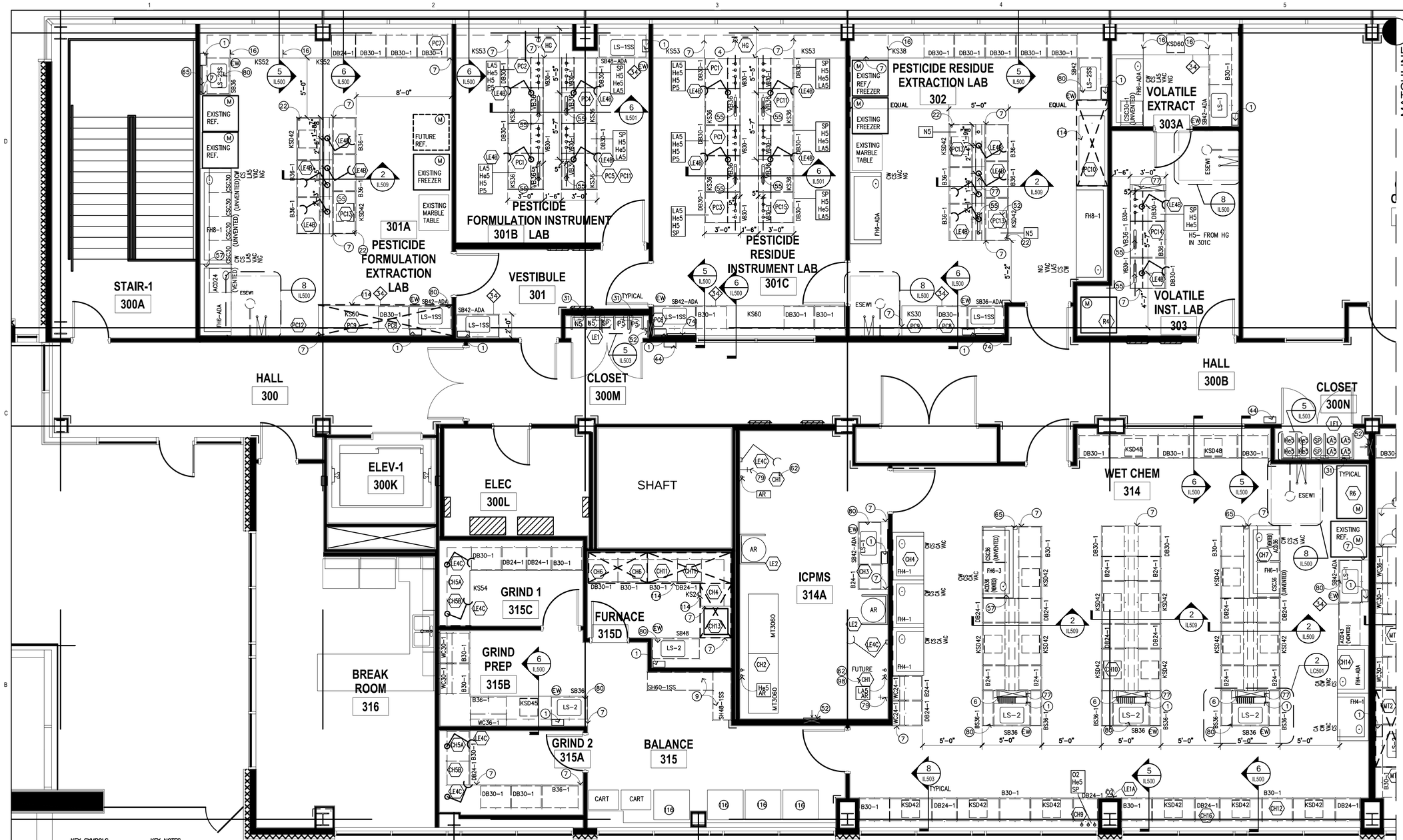

KEY SYMBOLS

- (L) LOCKING
- (M) MONITOR TO BMS
- (EW) DECK MOUNTED DRENCH HOSE EYEWASH FIXTURE
- (CA) COMPRESSED AIR
- XXX MARINE EDGE COUNTER ELEVATION IN INCHES
- XX NON-MARINE EDGE COUNTER ELEVATION IN INCHES
- (X) KEY NOTES
- (XX) EQUIPMENT
- XXX ROOM NUMBERS

ABBREVIATIONS

BFF	BELOW FINISHED FLOOR
HD	HUB DRAIN
FD	FLOOR DRAIN
FFD	FLUSHABLE FLOOR DRAIN
SS	STAINLESS STEEL

KEY NOTES

1. PAPER TOWEL DISPENSER– SPEC. 116000
2. COAT HOOKS MOUNTED @54" AFF–SPEC 116000
3. SAFETY SUPPLY CABINET–SPEC 116000
4. INLET PORT FOR HYDROGEN GENERATOR
5. OPEN TO FINISH WALL SURFACE
6. EPOXY DRYING RACK – 18"x36" – SPEC 123450
7. FILLER PANEL – MATCH CASEWORK MATERIAL
8. OMIT FRONT AND BACK APRON FOR 34" HIGH UNDER COUNTER EQUIPMENT.
9. SS SHELVING–SPEC 116000
10. 2 1/2" CORD GROMMET–SPEC 123450
11. CONTROL PANEL FOR FA7 (TARGET TROLLEY)
12. 2'X4' STAINLESS STEEL FOLD DOWN SURFACE – REFER TO DETAIL 8/IL507
13. COUNTERTOP MOUNTED COMPRESSED AIR (CA) TURRET
14. COLD WATER HOSE BIB @54" AFF– BY DIV. 22
15. HIGH DENSITY SHELVING– BY DIV. 10
16. KSSF SUPPORT FRAME– REFER TO DETAIL 9/IL500
17. HOT & COLD MIXING STATION–BY DIV. 22 (W/ 30' OF HOSE)
18. MOBILE LIFT PARK
19. UTILITY SINK– BY DIV. 22
20. UNDER COUNTER KNEE WALL SUPPORT –REFER TO ARCHITECTURAL
21. SPILL CART–SPEC 116000
22. SUPPORT LEG–BY DIV. 12
23. COAT RACK & SHELF–SPEC 116000
24. WALL MOUNTED PAPER ROLL DISPENSER WITH PLASTIC LAMINATE COVERED PLYWOOD BACKBOARD. 36"HX12"H MOUNTED AT 48" AFF TO BOTTOM.
25. DOUBLE KSSF– REFER TO DETAIL 1/IL509
26. ELEVATION TRANSITION POINT
27. MILLWORK–BY DIV. 6
28. FORMALIN SPIGOT
29. UNDERCOUNTER TYPE I WATER POLISHER–BY DIV. 22
30. ALL STAINLESS STEEL CASEWORK IN AUTOPSY SUITES WILL HAVE MARINE EDGE COUNTER TOPS.
31. GAS MANIFOLD @66" A.F.F. (BOTTOM) –BY DIV. 22
32. FLOOR DRAIN– BY DIV. 22
33. DISSECTION TABLE SHELF BY MFR
34. STAINLESS STEEL SCRUB SINK– BY DIV. 22
35. LEVEL 4 BULLET RESISTANT DOOR/FRAME–SPEC 083950
36. 'IN USE' LIGHT–DETAIL–1/IL507–BY DIV. 26
37. PUMP CONTROL FOR FORMALIN DISPENSOR
38. MAPLE COUNTER–2" THICK W/ 3/4" X 3 1/2" MAPLE BACK SPLASH W/ 4" LEADING EDGE OVERHANG– SPEC 123450
39. 8" DIA. EXHAUST DUCT FROM PROJECTILE RECOVERY TANK. DIV. 23 TO CONNECT EXHAUST
40. MOBILE DISSECTING WING–SPEC 117810
41. WALL MOUNTED LONG GUN RACK – REFER TO 3/IL508
42. PAINTED 3" NUMBER AND ARROW WHITE PAINT STENCILED ON RUBBER PANELS AT 1 YARD INCREMENTS MEASURED FROM THE ZERO POINT OF THE FIRING LINE. ACCURACY REQUIRED WITHIN 1/16".– REFER TO 3/IL507
43. OPEN ALL OF THE WAY THROUGH
44. GAS ANNUNCIATOR PANEL– BY DIV. 22
45. FORMALIN CONTAINER AND DISPENSING PUMP
46. PAINTED FIRING LINE– REFER TO DETAIL 3/IL507
47. FLUSHING FLOOR DRAIN–BY DIV. 22
48. CONTROLS FOR RANGE AIR HANDLING SYSTEM– DIV. 23
49. 36"L X 12" W X 1" THICK MAPLE WOOD SHELF MOUNT & 48" AFF–SPEC 123450
50. CW CONNECTION @ 48" A.F.F.–REFER TO PLUMB. VERIFY LOCATION BASED ON APPROVED SHOP DRAWINGS OF PRT
51. MANUAL OPERATED BLACKOUT SHADE–SPEC 122413
52. LOW ELEVATION EXHAUST– REFER TO MECHANICAL –SPEC. 114900
53. BUG ZAPPER MOUNTED @ +84" A.F.F.–BY DIV 26 –SPEC 116000
54. HAMPER– NIC
55. 2–1/2" X 18" CORD SLOT
56. EXHAUST VENTS BY DISSECTING STATION MFR. (VERIFY 8"X24") –COORDINATE DUCTWORK WITH DIV. 23
57. ACID VENT PIPE– REFER TO DETAIL 2/IL500 AND MECHANICAL
58. ADJUSTABLE TOOL RACK–SPEC 114900 REFER TO DETAIL 4/IL507
59. 12"X12"X12" FLOOR SINK–BY DIV. 22
60. PRESSURE DIFFERENTIAL INDICATOR @ 54" AFF– BY DIV. 23
61. LEVEL 4 BULLET RESISTANT WINDOW & FRAME– SPEC 085653
62. DIRECT CONNECT EXHAUST– BY DIV. 23
63. DIGITAL READOUT FOR SCALE–SPEC 117810
64. ACID VENT DUCT– REFER TO TACDx ELEVATION ON IL004– BY DIV. 23
65. BELOW COUNTER RECEPTACLE RECESSED INTO SERVICE CLOSURE PANEL– REFER TO ELECTRICAL DRAWINGS.
66. TRENCH DRAIN– BY DIV. 22
67. USER CONTROLLED AIR FLOW SWITCH–BY DIV. 23
68. BULLET TRAP/RANGE SIGN MOUNTED AT 60" AFF TO BOTTOM–SPEC. 114900
69. PRT SIGN MOUNTED AT 60" AFF TO BOTTOM. –SPEC. 114900
70. WALL MOUNTED FLAT PANEL MONITOR–BY DIV. 27
71. COOLER CONTROL PANEL
72. IN–WALL FLUSH VALVE FOR FLUSHING FLOOR DRAINS – BY DIV. 22
73. EXISTING AMMO STORAGE SHELVING SYSTEM TO BE RELOCATED TO NEW FACILITY BY CONTRACTOR
74. BACKDRAFT EXHAUST GRILLE– BY DIV. 23 REFER TO MECH. FOR SIZE, MOUNT ABOVE COUNTERTOP BACKSPLASH
75. ADA COMPLIANT S.S. SINK–BY DIV. 22
76. REMOVABLE EVIDENCE RACK MOUNTED TO MOBILE TABLE–REFER TO DETAIL A8/IL501–SPEC 123450
77. UMBILICAL SERVICE CHASE–SPEC 123450
78. DIRECT CONNECT PRT TO CW
79. COMPRESSED AIR– BY DIV. 23
80. TYPE 3 RO WATER FAUCET– COUNTER MOUNTED
81. TYPE 1 DI WATER POLISHER– WALL MOUNTED
82. GLASS WALL PANEL–REFER TO ARCH.
83. HUB DRAIN FOR BODY FREEZER CONDENSATE BY DIV. 22
84. HUB DRAIN– BY DIV. 22
85. MONITOR AND INTERCOM TO OUTSIDE PEDESTAL – BY DIV. 26
86. S.S. WALL GUARD – REFER TO DET. 9/IL506. IN ROOMS 125, 125A AND 125B S.S. WALL GUARDS ARE TO BE BY COOLER MFR.
87. S.S. CORNER GUARD – REFER TO DET. 9/IL505
88. ADJUSTABLE DOCK LIGHT– BY DIV. 26
89. X–RAY ROOM TO BE R.F. SHIELDED PER QUAUIFIED PHYSICIST CONSULTANT PRIOR TO CONSTRUCTION.
90. INTEGRAL COUNTERTOP SIDE SPLASH
91. MOP AND BROOM HOLDER RACK–SPEC. 116000
92. STEEL STRUCTURE TO SUPPORT DISSECTING STATION –BY STRUCTURAL ENGINEER
93. APPROXIMATE LOCATION OF EVAPORATING UNITS IN COLD ROOMS MOUNTED NEAR CEILING
94. SCALE POLE BRACKET–SPEC 117810
95. SPRAY HOSE ASSEMBLY – SPEC. 117800
96. MONITOR MOUNTED ON ARTICULATING SWIVEL ARM BRACKET–BY DIV. 27
97. HYDRO ASPIRATOR – SPEC. 117810
98. STUB FOR FUTURE DIRECT EXHAUST AND SNORKEL CONNECTION– BY DIV. 23
99. 3' H X 4' W MARKER BOARD–SPEC. 101100
100. ARTICULATING MARKER BOARD–SPEC 116000
101. S.S. SHELF – 12"L x 10"D
102. S.S. SHELF – 11"D, PROVIDE HOLE IN SHELF FOR SCALE POST AND ALIGN WITH SCALE POST BRACKET
103. MATCHING BACK DRAFT WALL VENTS SUPPLIED BY DISSECTION TABLE MFR SPEC 117810 – DIV. 23 WILL CONNECT THE EXHAUST.
104. 6" INTEGRAL WALL BASE– REFER TO FINISH SCHEDULE
105. INSTRUMENT DRAWER
106. DISPOSAL SWITCH
107. GFCI OUTLET W/ WEATHERPROOF COVER
108. 2 HP DISPOSAL– SPEC. 117810
109. END RINSE CONTROL VALVE
110. HW & CW MIXING FAUCET
111. EXHAUST VENTS BY DISSECTING STATION MFR. (8"X30") –COORDINATE DUCTWORK WITH DIV. 23
112. PASS THROUGH CABINET WITH VISION DOORS SPEC 116000– REFER TO DETAIL 2/IL508
113. ABOVE COUNTER RECEPTACLE RECESSED INTO SERVICE CLOSURE PANEL OR CHASE– REFER TO ELECTRICAL DRAWINGS.
114. STAINLESS STEEL CANOPY–BY DIV. 23
115. CURTAIN AND TRACK– BY DIV. 10
116. MARBLE TABLE – SPEC. 116000
117. TASK LIGHT– BY DIV. 26
118. LIQUID NITROGEN DEWAR, NIC
119. 1" DIA. HOLE W/CAP FOR DI WATER DELIVERY DEVICE.
120. (2) PADLOCK RACK MOUNTED ON WALL @54" AFF AND 48" AFF
121. EXHAUST VENTS TO BE HAVE OPPOSED BLADE DAMPER ACCESSIBLE TROUGH THE FACE OF THE GRILL FOR AIR BALANCING –BY DISSECTING TABLE MFR
122. POWER FROM BELOW– BY DIV. 26

CRSA
649 E. South Temple
Salt Lake City, UT 84102
801.355.5915

MWL
McClaren, Wilson & Lawrie, Inc.
11798 North Lakeridge Parkway
Ashland, Va 23005
(804)228.7465
www.mwlarchitects.com

State of Utah
Department of Administrative Services
Division of Facilities Construction & Management
4110 State Office Building
Salt Lake City, Utah 84114
Phone: (801) 538 - 3018
Fax: (801) 538 - 3267

DIVISION OF FACILITIES CONSTRUCTION AND MANAGEMENT
REVIEWED FOR CODE COMPLIANCE
SIGNATURE: Eric Ralph
DATE: 08-05-2014

STATUS
Not For Construction

ARCHITECT-ENGINEER STAMP

KEY PLAN

Project #: B13-024

DATE:	REVISION:
APRIL 21, 2014	BID SET

CHECKED BY	B.CARVER
DRAWN BY	B.WARREN / A.VIG

3RD FLOOR ENLARGED LAB PLANS

IL109

VOLUME 1

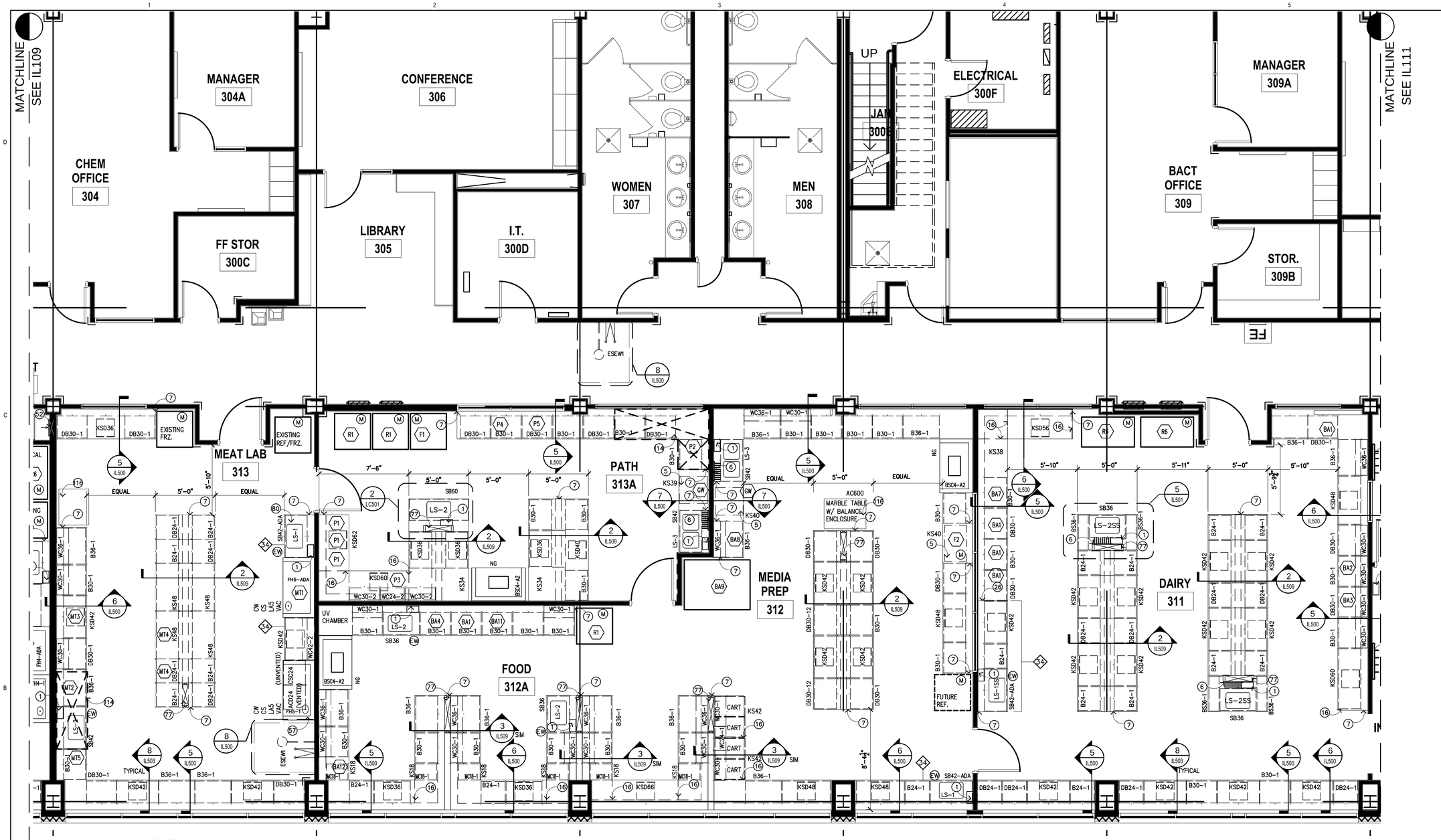

KEY SYMBOLS

- (L) LOCKING
- (M) MONITOR TO BMS
- (EW) DECK MOUNTED DRENCH HOSE EYEWASH FIXTURE
- (CA) COMPRESSED AIR
- (XXX) MARINE EDGE COUNTER ELEVATION IN INCHES
- (XX) NON-MARINE EDGE COUNTER ELEVATION IN INCHES
- (X) KEY NOTES
- (XX) EQUIPMENT
- [XXX] ROOM NUMBERS

ABBREVIATIONS

BFF	BELOW FINISHED FLOOR
HD	HUB DRAIN
FD	FLOOR DRAIN
FFD	FLUSHABLE FLOOR DRAIN
SS	STAINLESS STEEL

KEY NOTES

1. PAPER TOWEL DISPENSER– SPEC. 116000
2. COAT HOOKS MOUNTED @54" AFF–SPEC 116000
3. SAFETY SUPPLY CABINET–SPEC 116000
4. INLET PORT FOR HYDROGEN GENERATOR
5. OPEN TO FINISH WALL SURFACE
6. EPOXY DRYING RACK – 18"x36" – SPEC 123450
7. FILLER PANEL – MATCH CASEWORK MATERIAL
8. OMIT FRONT AND BACK APRON FOR 34" HIGH UNDER COUNTER EQUIPMENT.
9. SS SHELVING–SPEC 116000
10. 2 1/2" CORD GROMMET–SPEC 123450
11. CONTROL PANEL FOR FA7 (TARGET TROLLEY)
12. 2'X4' STAINLESS STEEL FOLD DOWN SURFACE – REFER TO DETAIL 8/IL507
13. COUNTERTOP MOUNTED COMPRESSED AIR (CA) TURRET
14. COLD WATER HOSE BIB @54" AFF– BY DIV. 22
15. HIGH DENSITY SHELVING– BY DIV. 10
16. KSSF SUPPORT FRAME– REFER TO DETAIL 9/IL500
17. HOT & COLD MIXING STATION–BY DIV. 22 (W/ 30' OF HOSE)
18. MOBILE LIFT PARK
19. UTILITY SINK– BY DIV. 22
20. UNDER COUNTER KNEE WALL SUPPORT –REFER TO ARCHITECTURAL
21. SPILL CART–SPEC 116000
22. SUPPORT LEG–BY DIV. 12
23. COAT RACK & SHELF–SPEC 116000
24. WALL MOUNTED PAPER ROLL DISPENSER WITH PLASTIC LAMINATE COVERED PLYWOOD BACKBOARD. 36"HX12"H MOUNTED AT 48" AFF TO BOTTOM.
25. DOUBLE KSSF– REFER TO DETAIL 1/IL509
26. ELEVATION TRANSITION POINT
27. MILLWORK–BY DIV. 6
28. FORMALIN SPIGOT
29. UNDERCOUNTER TYPE I WATER POLISHER–BY DIV. 22
30. ALL STAINLESS STEEL CASEWORK IN AUTOPSY SUITES WILL HAVE MARINE EDGE COUNTER TOPS.
31. GAS MANIFOLD @66" A.F.F. (BOTTOM) –BY DIV. 22
32. FLOOR DRAIN– BY DIV. 22
33. DISSECTION TABLE SHELF BY MFR
34. STAINLESS STEEL SCRUB SINK– BY DIV. 22
35. LEVEL 4 BULLET RESISTANT DOOR/FRAME–SPEC 083950
36. 'IN USE' LIGHT–DETAIL–1/IL507–BY DIV. 26
37. PUMP CONTROL FOR FORMALIN DISPENSOR
38. MAPLE COUNTER–2" THICK W/ 3/4" X 3 1/2" MAPLE BACK SPLASH W/ 4" LEADING EDGE OVERHANG– SPEC 123450
39. 8" DIA. EXHAUST DUCT FROM PROJECTILE RECOVERY TANK. DIV. 23 TO CONNECT EXHAUST
40. MOBILE DISSECTING WING–SPEC 117810
41. WALL MOUNTED LONG GUN RACK – REFER TO 3/IL508
42. PAINTED 3" NUMBER AND ARROW WHITE PAINT STENCILED ON RUBBER PANELS AT 1 YARD INCREMENTS MEASURED FROM THE ZERO POINT OF THE FIRING LINE. ACCURACY REQUIRED WITHIN 1/16".– REFER TO 3/IL507
43. OPEN ALL OF THE WAY THROUGH
44. GAS ANNUNCIATOR PANEL– BY DIV. 22
45. FORMALIN CONTAINER AND DISPENSING PUMP
46. PAINTED FIRING LINE– REFER TO DETAIL 3/IL507
47. FLUSHING FLOOR DRAIN–BY DIV. 22
48. CONTROLS FOR RANGE AIR HANDLING SYSTEM– DIV. 23
49. 36"L X 12" W X 1" THICK MAPLE WOOD SHELF MOUNT & 48" AFF–SPEC 123450
50. CW CONNECTION @ 48" A.F.F.–REFER TO PLUMB. VERIFY LOCATION BASED ON APPROVED SHOP DRAWINGS OF PRT
51. MANUAL OPERATED BLACKOUT SHADE–SPEC 122413
52. LOW ELEVATION EXHAUST– REFER TO MECHANICAL
53. BUG ZAPPER MOUNTED @ +84" A.F.F.–BY DIV 26 –SPEC 116000
54. HAMPER– NIC
55. 2–1/2" X 18" CORD SLOT
56. EXHAUST VENTS BY DISSECTING STATION MFR. (VERIFY 8"X24") –COORDINATE DUCTWORK WITH DIV. 23
57. ACID VENT PIPE– REFER TO DETAIL 2/IL500 AND MECHANICAL
58. ADJUSTABLE TOOL RACK–SPEC 114900 REFER TO DETAIL 4/IL507
59. 12"X12"X12" FLOOR SINK–BY DIV. 22
60. PRESSURE DIFFERENTIAL INDICATOR @ 54" AFF– BY DIV. 23
61. LEVEL 4 BULLET RESISTANT WINDOW & FRAME– SPEC 085653
62. DIRECT CONNECT EXHAUST– BY DIV. 23
63. DIGITAL READOUT FOR SCALE–SPEC 117810
64. ACID VENT DUCT– REFER TO TACDx ELEVATION ON IL004– BY DIV. 23
65. BELOW COUNTER RECEPTACLE RECESSED INTO SERVICE CLOSURE PANEL– REFER TO ELECTRICAL DRAWINGS.
66. TRENCH DRAIN– BY DIV. 22
67. USER CONTROLLED AIR FLOW SWITCH–BY DIV. 23
68. BULLET TRAP/RANGE SIGN MOUNTED AT 60" AFF TO BOTTOM–SPEC. 114900
69. PRT SIGN MOUNTED AT 60" AFF TO BOTTOM. –SPEC. 114900
70. WALL MOUNTED FLAT PANEL MONITOR–BY DIV. 27
71. COOLER CONTROL PANEL
72. IN–WALL FLUSH VALVE FOR FLUSHING FLOOR DRAINS – BY DIV. 22
73. EXISTING AMMO STORAGE SHELVING SYSTEM TO BE RELOCATED TO NEW FACILITY BY CONTRACTOR –SPEC. 114900
74. BACKDRAFT EXHAUST GRILLE– BY DIV. 23 REFER TO MECH. FOR SIZE, MOUNT ABOVE COUNTERTOP BACKSPLASH
75. ADA COMPLIANT S.S. SINK–BY DIV. 22
76. REMOVABLE EVIDENCE RACK MOUNTED TO MOBILE TABLE–REFER TO DETAIL A8/IL501–SPEC 123450
77. UMBILICAL SERVICE CHASE–SPEC 123450
78. DIRECT CONNECT PRT TO CW
79. COMPRESSED AIR– BY DIV. 23
80. TYPE 3 RO WATER FAUCET– COUNTER MOUNTED
81. TYPE 1 DI WATER POLISHER– WALL MOUNTED
82. GLASS WALL PANEL–REFER TO ARCH.
83. HUB DRAIN FOR BODY FREEZER CONDENSATE BY DIV. 22
84. HUB DRAIN– BY DIV. 22
85. MONITOR AND INTERCOM TO OUTSIDE PEDESTAL – BY DIV. 26
86. S.S. WALL GUARD – REFER TO DET. 9/IL506. IN ROOMS 125, 125A AND 125B S.S. WALL GUARDS ARE TO BE BY COOLER MFR.
87. S.S. CORNER GUARD – REFER TO DET. 9/IL505
88. ADJUSTABLE DOCK LIGHT– BY DIV. 26
89. X–RAY ROOM TO BE R.F. SHIELDED PER QUALIFIED PHYSICIST CONSULTANT PRIOR TO CONSTRUCTION.
90. INTEGRAL COUNTERTOP SIDE SPLASH
91. MOP AND BROOM HOLDER RACK–SPEC. 116000
92. STEEL STRUCTURE TO SUPPORT DISSECTING STATION –BY STRUCTURAL ENGINEER
93. APPROXIMATE LOCATION OF EVAPORATING UNITS IN COLD ROOMS MOUNTED NEAR CEILING
94. SCALE POLE BRACKET–SPEC 117810
95. SPRAY HOSE ASSEMBLY – SPEC. 117800
96. MONITOR MOUNTED ON ARTICULATING SWIVEL ARM BRACKET–BY DIV. 27
97. HYDRO ASPIRATOR – SPEC. 117810
98. STUB FOR FUTURE DIRECT EXHAUST AND SNORKEL CONNECTION– BY DIV. 23
99. 3' H X 4' W MARKER BOARD–SPEC. 101100
100. ARTICULATING MARKER BOARD–SPEC 116000
101. S.S. SHELF – 12"L x 10"D
102. S.S. SHELF – 11"D, PROVIDE HOLE IN SHELF FOR SCALE POST AND ALIGN WITH SCALE POST BRACKET
103. MATCHING BACK DRAFT WALL VENTS SUPPLIED BY DISSECTION TABLE MFR SPEC 117810 – DIV. 23 WILL CONNECT THE EXHAUST.
104. 6" INTEGRAL WALL BASE– REFER TO FINISH SCHEDULE
105. INSTRUMENT DRAWER
106. DISPOSAL SWITCH
107. GFCI OUTLET W/ WEATHERPROOF COVER
108. 2 HP DISPOSAL– SPEC. 117810
109. END RINSE CONTROL VALVE
110. HW & CW MIXING FAUCET
111. EXHAUST VENTS BY DISSECTING STATION MFR. (8"X30") –COORDINATE DUCTWORK WITH DIV. 23
112. PASS THROUGH CABINET WITH VISION DOORS SPEC 116000– REFER TO DETAIL 2/IL508
113. ABOVE COUNTER RECEPTACLE RECESSED INTO SERVICE CLOSURE PANEL OR CHASE– REFER TO ELECTRICAL DRAWINGS.
114. STAINLESS STEEL CANOPY–BY DIV. 23
115. CURTAIN AND TRACK– BY DIV. 10
116. MARBLE TABLE – SPEC. 116000
117. TASK LIGHT– BY DIV. 26
118. LIQUID NITROGEN DEWAR, NIC
119. 1" DIA. HOLE W/CAP FOR DI WATER DELIVERY DEVICE.
120. (2) PADLOCK RACK MOUNTED ON WALL @54" AFF AND 48" AFF
121. EXHAUST VENTS TO BE HAVE OPPOSED BLADE DAMPER ACCESSIBLE THROUGH THE FACE OF THE GRILL FOR AIR BALANCING –BY DISSECTING TABLE MFR
122. POWER FROM BELOW– BY DIV. 26

CRSA
649 E. South Temple
Salt Lake City, UT 84102
801.355.5915

MWL
McClaren, Wilson & Lawrie, Inc.
11798 North Lakeridge Parkway
Ashland, Va 23005
(804)228.7465
www.mwlarchitects.com

State of Utah
Department of Administrative Services
Division of Facilities Construction & Management
4110 State Office Building
Salt Lake City, Utah 84114
Phone: (801) 538 - 3018
Fax: (801) 538 - 3267

DIVISION OF FACILITIES CONSTRUCTION AND MANAGEMENT
REVIEWED FOR CODE COMPLIANCE
SIGNATURE: Ernie Gelfe
DATE: 08-05-2014

STATUS
Not For Construction

ARCHITECT-ENGINEER STAMP

KEY PLAN

Project #: B13-024

DATE:	REVISION:
APRIL 21, 2014	BID SET

CHECKED BY	B.CARVER
DRAWN BY	B.WARREN / A.VIG

3RD FLOOR ENLARGED LAB PLANS

IL110

VOLUME 1

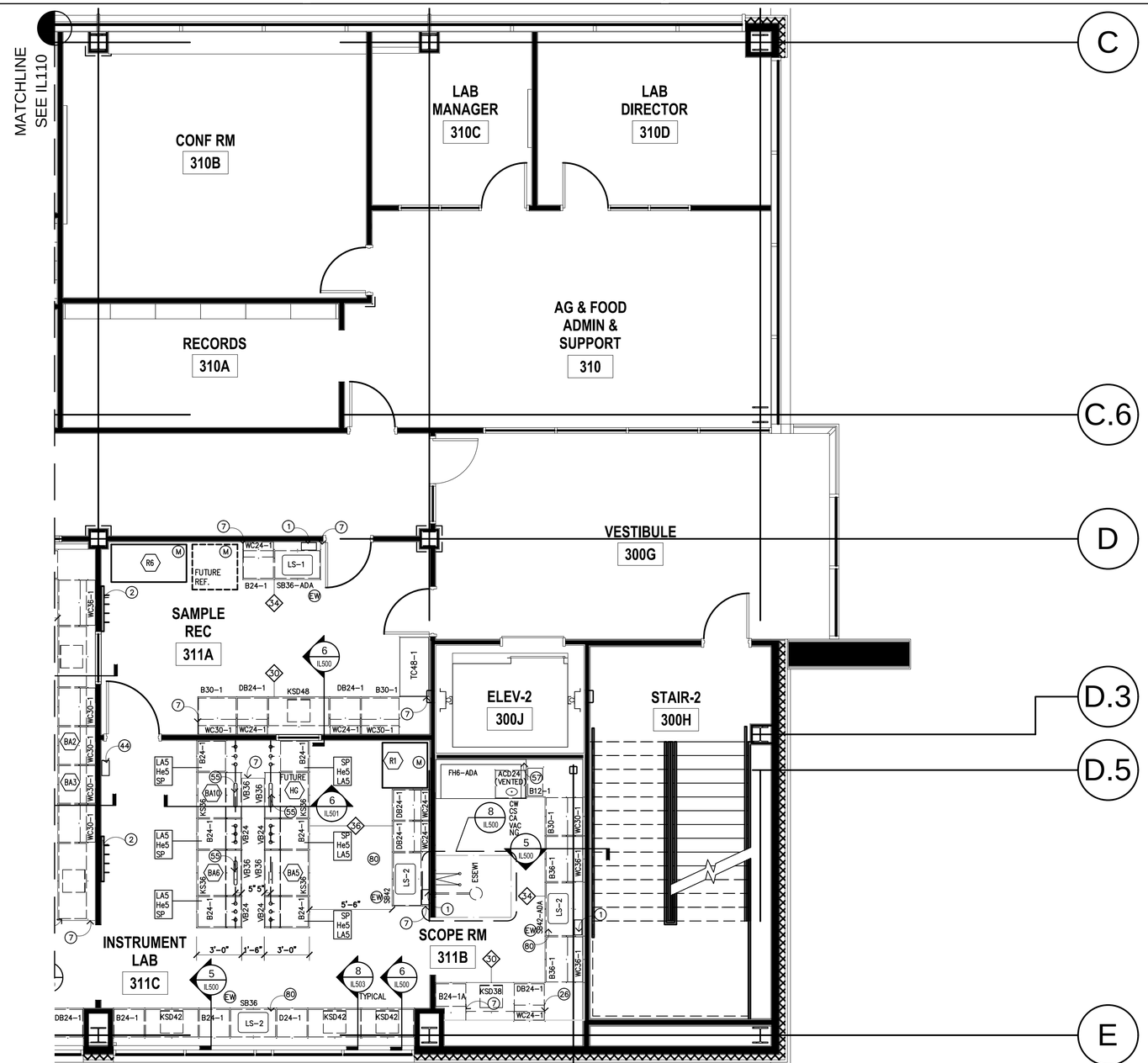

KEY SYMBOLS

- (L) LOCKING
- (M) MONITOR TO BMS
- (EW) DECK MOUNTED DRENCH HOSE EYEWASH FIXTURE
- (CA) COMPRESSED AIR
- (XXX) MARINE EDGE COUNTER ELEVATION IN INCHES
- (XX) NON-MARINE EDGE COUNTER ELEVATION IN INCHES
- (X) KEY NOTES
- (XX) EQUIPMENT
- XXX ROOM NUMBERS

ABBREVIATIONS

BFF	BELOW FINISHED FLOOR
HD	HUB DRAIN
FD	FLOOR DRAIN
FFD	FLUSHABLE FLOOR DRAIN
SS	STAINLESS STEEL

KEY NOTES

1. PAPER TOWEL DISPENSER– SPEC. 116000
2. COAT HOOKS MOUNTED @54" AFF–SPEC 116000
3. SAFETY SUPPLY CABINET–SPEC 116000
4. INLET PORT FOR HYDROGEN GENERATOR
5. OPEN TO FINISH WALL SURFACE
6. EPOXY DRYING RACK – 18"x36" – SPEC 123450
7. FILLER PANEL – MATCH CASEWORK MATERIAL
8. OMIT FRONT AND BACK APRON FOR 34" HIGH UNDER COUNTER EQUIPMENT.
9. SS SHELVING–SPEC 116000
10. 2 1/2" CORD GROMMET–SPEC 123450
11. CONTROL PANEL FOR FA7 (TARGET TROLLEY)
12. 2'X4' STAINLESS STEEL FOLD DOWN SURFACE – REFER TO DETAIL 8/IL507
13. COUNTERTOP MOUNTED COMPRESSED AIR (CA) TURRET
14. COLD WATER HOSE BIB @54" AFF– BY DIV. 22
15. HIGH DENSITY SHELVING– BY DIV. 10
16. KSSF SUPPORT FRAME– REFER TO DETAIL 9/IL500
17. HOT & COLD MIXING STATION–BY DIV. 22 (W/ 30' OF HOSE)
18. MOBILE LIFT PARK
19. UTILITY SINK– BY DIV. 22
20. UNDER COUNTER KNEE WALL SUPPORT –REFER TO ARCHITECTURAL
21. SPILL CART–SPEC 116000
22. SUPPORT LEG–BY DIV. 12
23. COAT RACK & SHELF–SPEC 116000
24. WALL MOUNTED PAPER ROLL DISPENSER WITH PLASTIC LAMINATE COVERED PLYWOOD BACKBOARD. 36"HX12"H MOUNTED AT 48" AFF TO BOTTOM.
25. DOUBLE KSSF– REFER TO DETAIL 1/IL509
26. ELEVATION TRANSITION POINT
27. MILLWORK–BY DIV. 6
28. FORMALIN SPIGOT
29. UNDERCOUNTER TYPE I WATER POLISHER–BY DIV. 22
30. ALL STAINLESS STEEL CASEWORK IN AUTOPSY SUITES WILL HAVE MARINE EDGE COUNTER TOPS.
31. GAS MANIFOLD @66" A.F.F. (BOTTOM) –BY DIV. 22
32. FLOOR DRAIN– BY DIV. 22
33. DISSECTION TABLE SHELF BY MFR
34. STAINLESS STEEL SCRUB SINK– BY DIV. 22
35. LEVEL 4 BULLET RESISTANT DOOR/FRAME–SPEC 083950
36. 'IN USE' LIGHT–DETAIL–1/IL507–BY DIV. 26
37. PUMP CONTROL FOR FORMALIN DISPENSOR
38. MAPLE COUNTER–2" THICK W/ 3/4" X 3 1/2" MAPLE BACK SPLASH W/ 4" LEADING EDGE OVERHANG– SPEC 123450
39. 8" DIA. EXHAUST DUCT FROM PROJECTILE RECOVERY TANK. DIV. 23 TO CONNECT EXHAUST
40. MOBILE DISSECTING WING–SPEC 117810
41. WALL MOUNTED LONG GUN RACK – REFER TO 3/IL508
42. PAINTED 3" NUMBER AND ARROW WHITE PAINT STENCILED ON RUBBER PANELS AT 1 YARD INCREMENTS MEASURED FROM THE ZERO POINT OF THE FIRING LINE. ACCURACY REQUIRED WITHIN 1/16".– REFER TO 3/IL507
43. OPEN ALL OF THE WAY THROUGH
44. GAS ANNUNCIATOR PANEL– BY DIV. 22
45. FORMALIN CONTAINER AND DISPENSING PUMP
46. PAINTED FIRING LINE– REFER TO DETAIL 3/IL507
47. FLUSHING FLOOR DRAIN–BY DIV. 22
48. CONTROLS FOR RANGE AIR HANDLING SYSTEM– DIV. 23
49. 36"L X 12" W X 1" THICK MAPLE WOOD SHELF MOUNT @ 48" AFF–SPEC 123450
50. CW CONNECTION @ 48" A.F.F.–REFER TO PLUMB. VERIFY LOCATION BASED ON APPROVED SHOP DRAWINGS OF PRT
51. MANUAL OPERATED BLACKOUT SHADE–SPEC 122413
52. LOW ELEVATION EXHAUST– REFER TO MECHANICAL
53. BUG ZAPPER MOUNTED @ +84" A.F.F.–BY DIV 26 –SPEC 116000
54. HAMPER– NIC
55. 2–1/2" X 18" CORD SLOT
56. EXHAUST VENTS BY DISSECTING STATION MFR. (VERIFY 8"X24") –COORDINATE DUCTWORK WITH DIV. 23
57. ACID VENT PIPE– REFER TO DETAIL 2/IL500 AND MECHANICAL
58. ADJUSTABLE TOOL RACK–SPEC 114900 REFER TO DETAIL 4/IL507
59. 12"X12"X12" FLOOR SINK–BY DIV. 22
60. PRESSURE DIFFERENTIAL INDICATOR @ 54" AFF– BY DIV. 23
61. LEVEL 4 BULLET RESISTANT WINDOW & FRAME– SPEC 085653
62. DIRECT CONNECT EXHAUST– BY DIV. 23
63. DIGITAL READOUT FOR SCALE–SPEC 117810
64. ACID VENT DUCT– REFER TO TACDx ELEVATION ON IL004– BY DIV. 23
65. BELOW COUNTER RECEPTACLE RECESSED INTO SERVICE CLOSURE PANEL– REFER TO ELECTRICAL DRAWINGS.
66. TRENCH DRAIN– BY DIV. 22
67. USER CONTROLLED AIR FLOW SWITCH–BY DIV. 23
68. BULLET TRAP/RANGE SIGN MOUNTED AT 60" AFF TO BOTTOM–SPEC. 114900
69. PRT SIGN MOUNTED AT 60" AFF TO BOTTOM. –SPEC. 114900
70. WALL MOUNTED FLAT PANEL MONITOR–BY DIV. 27
71. COOLER CONTROL PANEL
72. IN–WALL FLUSH VALVE FOR FLUSHING FLOOR DRAINS – BY DIV. 22
73. EXISTING AMMO STORAGE SHELVING SYSTEM TO BE RELOCATED TO NEW FACILITY BY CONTRACTOR
74. BACKDRAFT EXHAUST GRILLE– BY DIV. 23 REFER TO MECH. FOR SIZE, MOUNT ABOVE COUNTERTOP BACKSPLASH
75. ADA COMPLIANT S.S. SINK–BY DIV. 22
76. REMOVABLE EVIDENCE RACK MOUNTED TO MOBILE TABLE–REFER TO DETAIL A8/IL501–SPEC 123450
77. UMBILICAL SERVICE CHASE–SPEC 123450
78. DIRECT CONNECT PRT TO CW
79. COMPRESSED AIR– BY DIV. 23
80. TYPE 3 RO WATER FAUCET– COUNTER MOUNTED
81. TYPE 1 DI WATER POLISHER– WALL MOUNTED
82. GLASS WALL PANEL–REFER TO ARCH.
83. HUB DRAIN FOR BODY FREEZER CONDENSATE BY DIV. 22
84. HUB DRAIN– BY DIV. 22
85. MONITOR AND INTERCOM TO OUTSIDE PEDESTAL – BY DIV. 26
86. S.S. WALL GUARD – REFER TO DET. 9/IL506. IN ROOMS 125, 125A AND 125B S.S. WALL GUARDS
87. S.S. CORNER GUARD – REFER TO DET. 9/IL505
88. ADJUSTABLE DOCK LIGHT– BY DIV. 26
89. X–RAY ROOM TO BE R.F. SHIELDED PER QUALIFIED PHYSICIST CONSULTANT PRIOR TO CONSTRUCTION.
90. INTEGRAL COUNTERTOP SIDE SPLASH
91. MOP AND BROOM HOLDER RACK–SPEC. 116000
92. STEEL STRUCTURE TO SUPPORT DISSECTING STATION –BY STRUCTURAL ENGINEER
93. APPROXIMATE LOCATION OF EVAPORATING UNITS IN COLD ROOMS MOUNTED NEAR CEILING
94. SCALE POLE BRACKET–SPEC 117810
95. SPRAY HOSE ASSEMBLY – SPEC. 117800
96. MONITOR MOUNTED ON ARTICULATING SWIVEL ARM BRACKET–BY DIV. 27
97. HYDRO ASPIRATOR – SPEC. 117810
98. STUB FOR FUTURE DIRECT EXHAUST AND SNORKEL CONNECTION– BY DIV. 23
99. 3' H X 4' W MARKER BOARD–SPEC. 101100
100. ARTICULATING MARKER BOARD–SPEC 116000
101. S.S. SHELF – 12"L x 10"D
102. S.S. SHELF – 11"D, PROVIDE HOLE IN SHELF FOR SCALE POST AND ALIGN WITH SCALE POST BRACKET
103. MATCHING BACK DRAFT WALL VENTS SUPPLIED BY DISSECTION TABLE MFR SPEC 117810 – DIV. 23 WILL CONNECT THE EXHAUST.
104. 6" INTEGRAL WALL BASE– REFER TO FINISH SCHEDULE
105. INSTRUMENT DRAWER
106. DISPOSAL SWITCH
107. GFCI OUTLET W/ WEATHERPROOF COVER
108. 2 HP DISPOSAL– SPEC. 117810
109. END RINSE CONTROL VALVE
110. HW & CW MIXING FAUCET
111. EXHAUST VENTS BY DISSECTING STATION MFR. (8"X30") –COORDINATE DUCTWORK WITH DIV. 23
112. PASS THROUGH CABINET WITH VISION DOORS SPEC 116000– REFER TO DETAIL 2/IL508
113. ABOVE COUNTER RECEPTACLE RECESSED INTO SERVICE CLOSURE PANEL OR CHASE– REFER TO ELECTRICAL DRAWINGS.
114. STAINLESS STEEL CANOPY–BY DIV. 23
115. CURTAIN AND TRACK– BY DIV. 10
116. MARBLE TABLE – SPEC. 116000
117. TASK LIGHT– BY DIV. 26
118. LIQUID NITROGEN DEWAR, NIC
119. 1" DIA. HOLE W/CAP FOR DI WATER DELIVERY DEVICE.
120. (2) PADLOCK RACK MOUNTED ON WALL @54" AFF AND 48" AFF
121. EXHAUST VENTS TO BE HAVE OPPOSED BLADE DAMPER ACCESSIBLE TROUGH THE FACE OF THE GRILL FOR AIR BALANCING –BY DISSECTING TABLE MFR
122. POWER FROM BELOW– BY DIV. 26

CRSA
649 E. South Temple
Salt Lake City, UT 84102
801.355.5915

MWL
McClaren, Wilson & Lawrie, Inc.
11798 North Lakeridge Parkway
Ashland, Va 23005
(804)228.7465
www.mwlarchitects.com

State of Utah
Department of Administrative Services
Division of Facilities Construction & Management
4110 State Office Building
Salt Lake City, Utah 84114
Phone: (801) 538 - 3018
Fax: (801) 538 - 3267

DIVISION OF FACILITIES CONSTRUCTION AND MANAGEMENT
REVIEWED FOR CODE COMPLIANCE
SIGNATURE:
DATE: 08-05-2014

STATUS
Not For Construction

ARCHITECT-ENGINEER STAMP

KEY PLAN

Project #: B13-024

DATE:	REVISION:
APRIL 21, 2014	BID SET

CHECKED BY	B.CARVER
DRAWN BY	B.WARREN / A.VIG

3RD FLOOR ENLARGED LAB PLANS

IL111

VOLUME 1

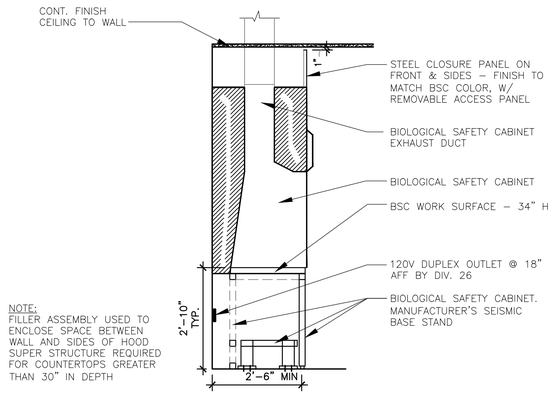

1 BIOLOGICAL SAFETY CABINET

SCALE 1/2" = 1'-0"

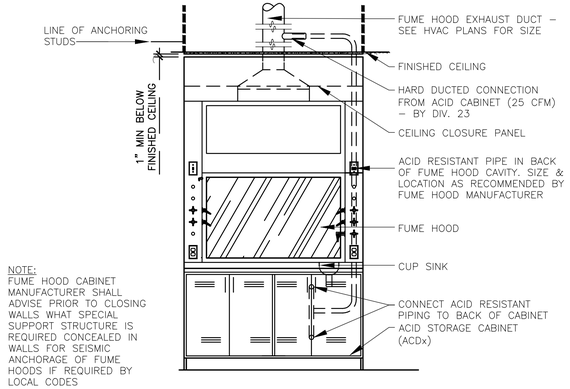

2 ACID CABINET VENT

SCALE 1/2" = 1'-0"

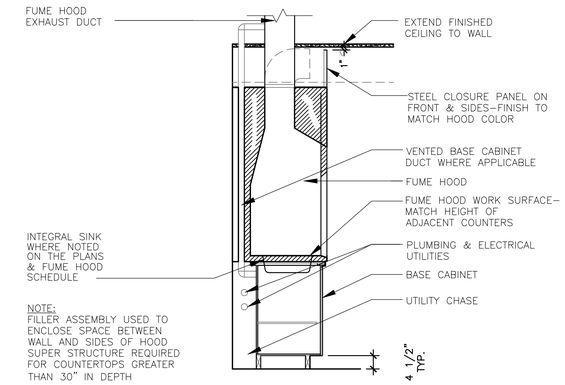

3 FUME HOOD

SCALE 1/2" = 1'-0"

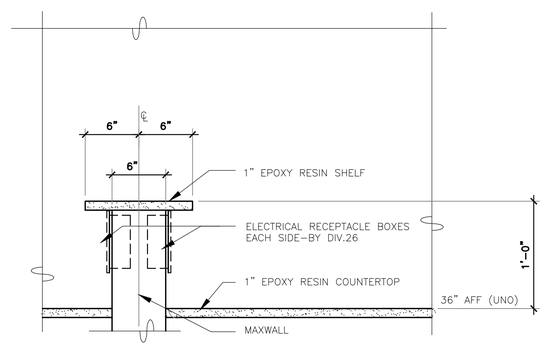

4 REAGENT SHELF

SCALE 1-1/2"=1'-0"

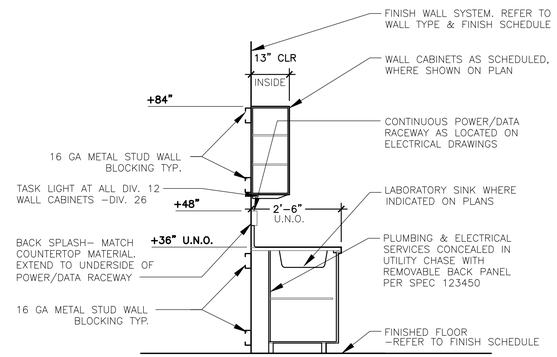

5 FIXED WALL CABINETRY

SCALE 1/2" = 1'-0"

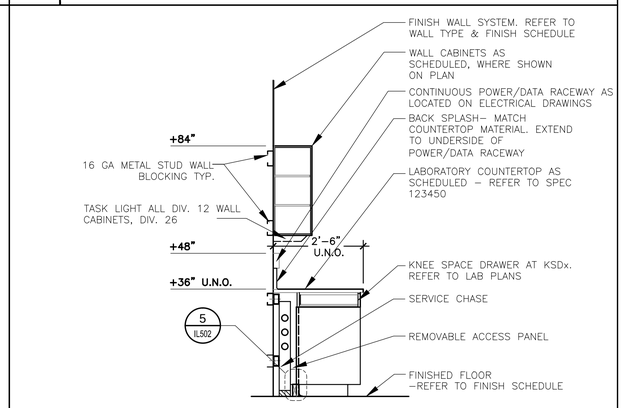

6 TYPICAL KNEE SPACE

SCALE 1/2" = 1'-0"

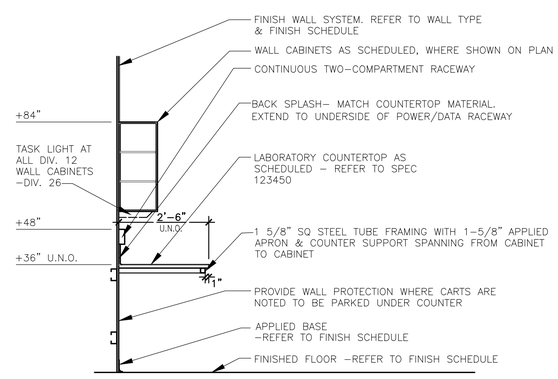

7 TYPICAL KNEE SPACE @ 1 5/8" APRON

SCALE 1/2" = 1'-0"

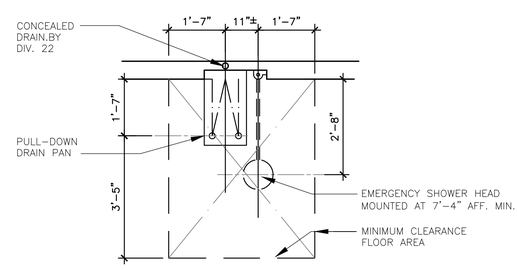

8 "SWING DOWN" EYE WASH / SHOWER

SCALE 1/2" = 1'-0" "ESEW1"

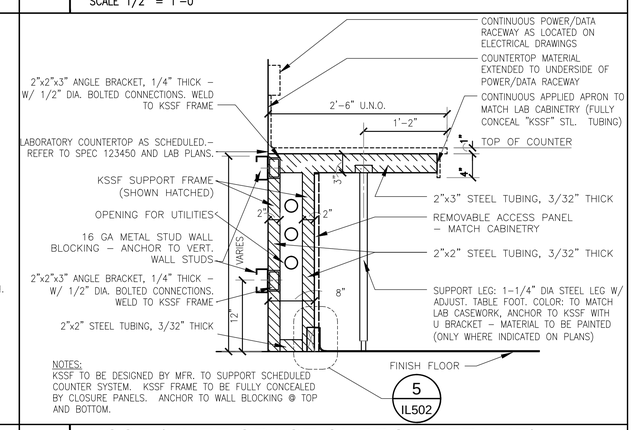

9 KSSF (KNEE SPACE SUPPORT FRAME)

SCALE 1" = 1'-0"

CRSA
649 E. South Temple
Salt Lake City, UT 84102
801.355.5915

MWL
McClaren, Wilson & Lawrie, Inc.
11798 North Lakeridge Parkway
Ashland, Va 23005
(804)228.7465
www.mwlarchitects.com

State of Utah
Department of Administrative Services
Division of Facilities Construction & Management
4110 State Office Building
Salt Lake City, Utah 84114
Phone: (801) 538 - 3018
Fax: (801) 538 - 3267

DIVISION OF FACILITIES CONSTRUCTION AND MANAGEMENT
REVIEWED FOR CODE COMPLIANCE
SIGNATURE: Eric Gelb
DATE: 08-05-2014

STATUS
Not For Construction

ARCHITECT-ENGINEER STAMP

KEY PLAN

Project #: B13-024

DATE:	REVISION:
APRIL 21, 2014	BID SET
CHECKED BY	B.CARVER
DRAWN BY	B.WARREN / A.VIG

LAB DETAILS

IL500

VOLUME 1

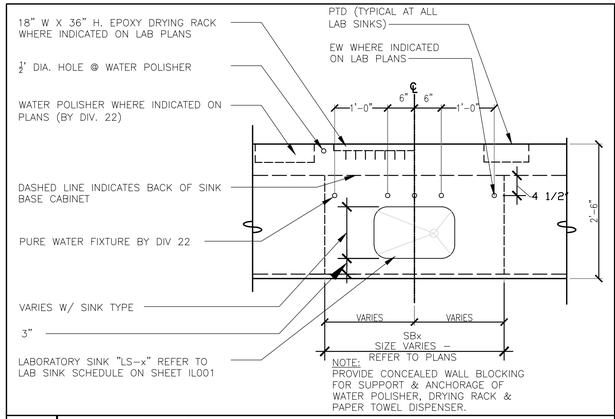

1 TYPICAL SINK DETAIL "SBx"

SCALE 3/4" = 1'-0"

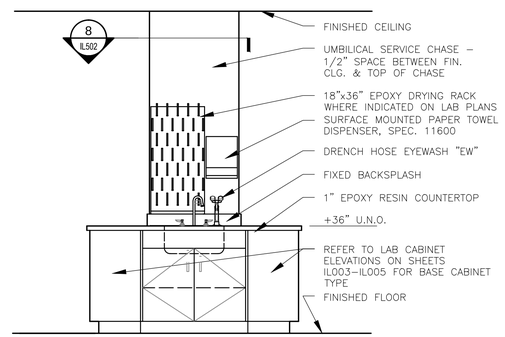

2 TYP. PIPE/DUCT CHASE ELEV. @ PENINSULAS

SCALE 1/2" = 1'-0"

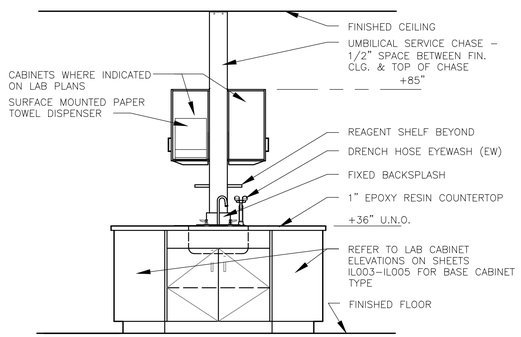

3 PIPE/DUCT CHASE ELEV. @ PENNISULAS

SCALE 1/2" = 1'-0"

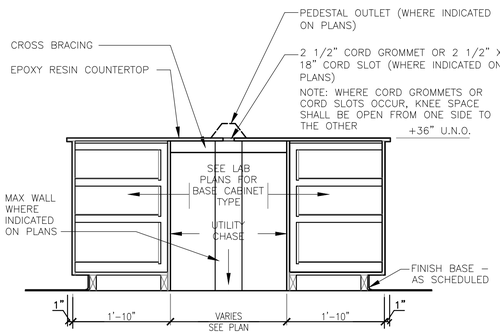

4 FIXED ISLAND CASEWORK

SCALE 3/4" = 1'-0"

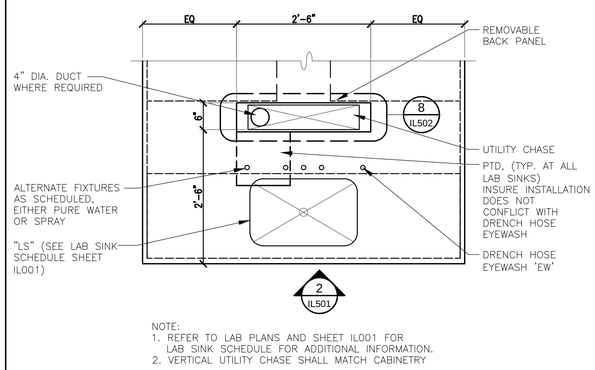

5 SINK BASE AT CHASE LOCATIONS

SCALE 3/4" = 1'-0"

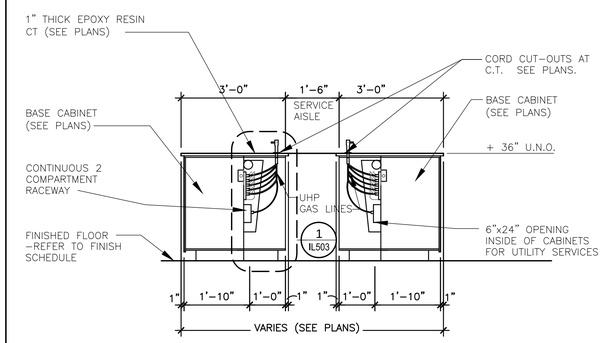

6 TYP. SECTION @ INSTRUMENT BENCHES

SCALE 1/2" = 1'-0"

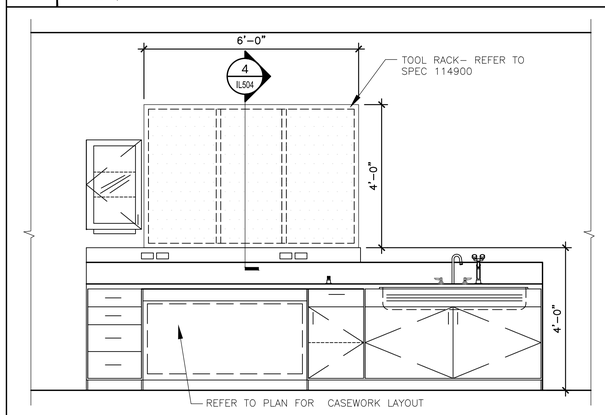

7 TOOL RACK ELEVATION

SCALE 1/2"=1'-0"

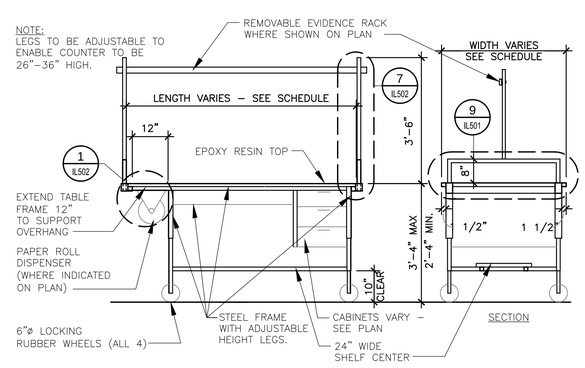

8 MOBILE TABLE ELEVATION

SCALE 1/2" = 1'-0"

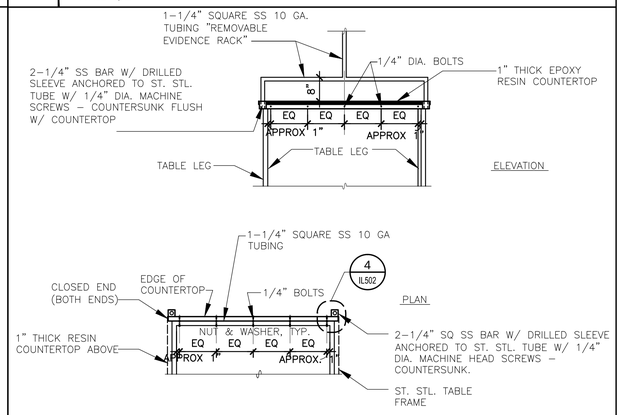

9 MOBILE TABLE EVIDENCE RACK PLAN/ELEV.

SCALE 1/2" = 1'-0"

CRSA
649 E. South Temple
Salt Lake City, UT 84102
801.355.5915

MWL
McClaren, Wilson & Lawrie, Inc.
11798 North Lakeridge Parkway
Ashland, Va 23005
(804)228.7465
www.mwlarchitects.com

State of Utah
Department of Administrative Services
Division of Facilities Construction & Management
4110 State Office Building
Salt Lake City, Utah 84114
Phone: (801) 538 - 3018
Fax: (801) 538 - 3267

DIVISION OF FACILITIES CONSTRUCTION AND MANAGEMENT
REVIEWED FOR CODE COMPLIANCE
SIGNATURE: Ernie Gelfe
DATE: 08-05-2014

STATUS
Not For Construction

ARCHITECT-ENGINEER STAMP

KEY PLAN

Project #: B13-024

DATE:	REVISION:
APRIL 21, 2014	BID SET
CHECKED BY	B.CARVER
DRAWN BY	B.WARREN / A.VIG

LAB DETAILS

IL501

VOLUME 1

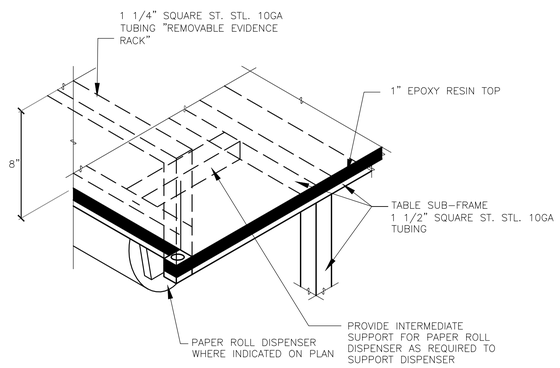

1 MOBILE TABLE EVIDENCE RACK DETAIL1

SCALE 1/2" = 1'-0"

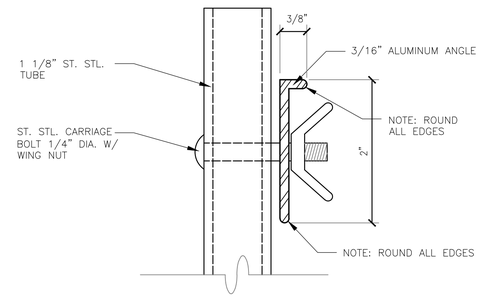

2 MOBILE TABLE EVIDENCE RACK DETAIL 2

SCALE 1'-0"=1'-0"

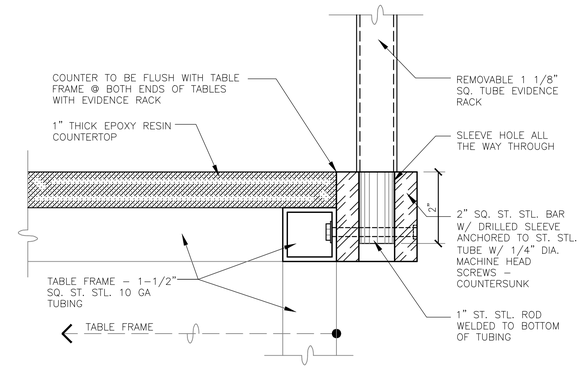

3 MOBILE TABLE EVID RACK DETAIL 3

SCALE 6"=1'-0"

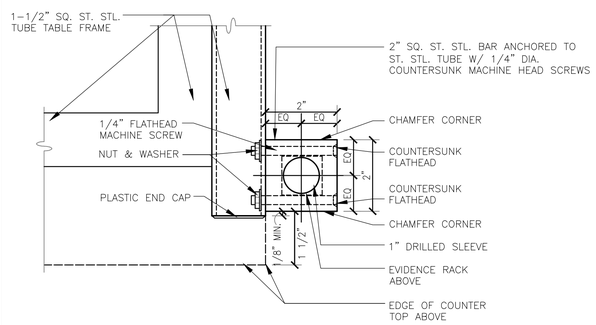

4 MOBILE TABLE EVID RACK DETAIL 4

SCALE 6"=1'-0"

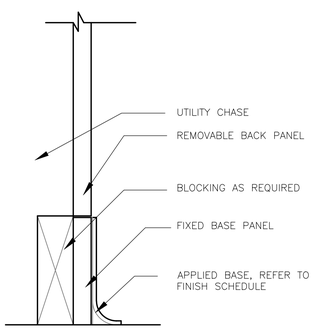

5 FIXED BASE PANEL DETAIL @ UTILITY CHASE

SCALE N.T.S.

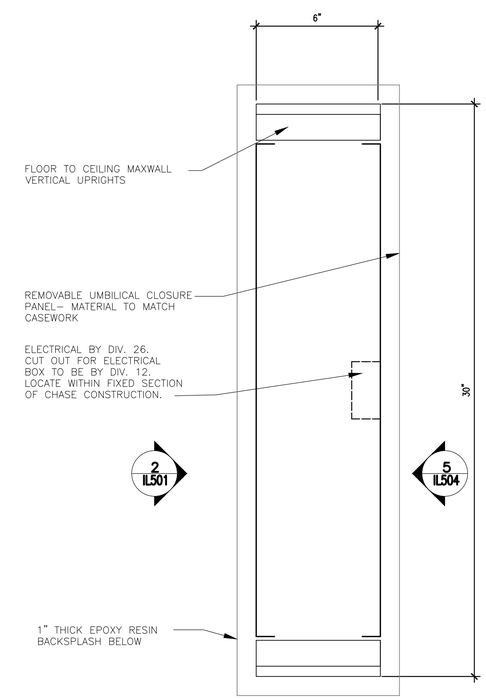

8 UMBILICAL SERVICE CHASE

SCALE NTS

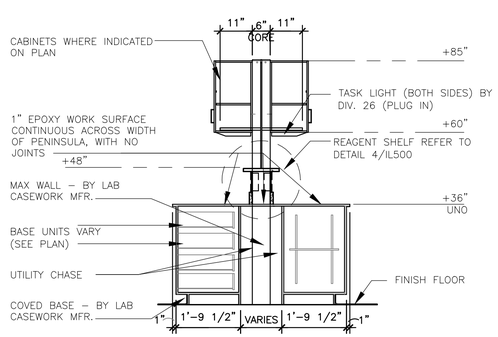

6 MAXWALL UPRT. SEC @ FIXED CASEWORK

SCALE 1/2" = 1'-0"

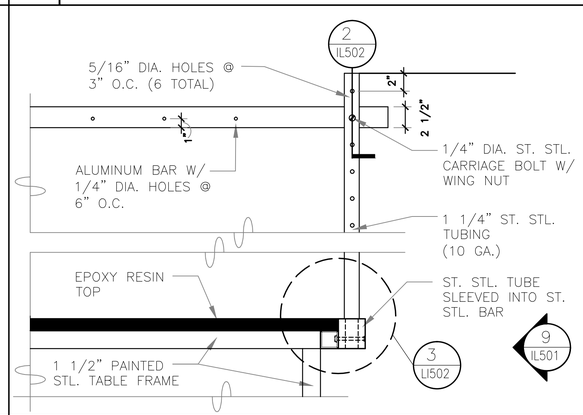

7 MOBILE TABLE EVID RACK DETAIL 5

SCALE 1-1/2"=1'-0"

CRSA
649 E. South Temple
Salt Lake City, UT 84102
801.355.5915

MWL
McClaren, Wilson & Lawrie, Inc.
11798 North Lakeridge Parkway
Ashland, Va 23005
(804)228.7465
www.mwlarchitects.com

State of Utah
Department of Administrative Services
Division of Facilities Construction & Management
4110 State Office Building
Salt Lake City, Utah 84114
Phone: (801) 538 - 3018
Fax: (801) 538 - 3267

DIVISION OF FACILITIES CONSTRUCTION AND MANAGEMENT
REVIEWED FOR CODE COMPLIANCE
SIGNATURE: Eric Ralph
DATE: 08-05-2014

STATUS
Not For Construction

ARCHITECT-ENGINEER STAMP

KEY PLAN

Project #: B13-024

DATE:	REVISION:
APRIL 21, 2014	BID SET

CHECKED BY	B.CARVER
DRAWN BY	B.WARREN / A.VIG

LAB DETAILS

IL502

VOLUME 1

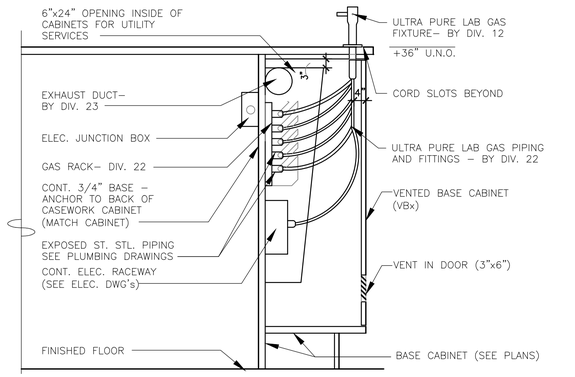

1 INSTRUMENT BENCH SECTION DETAIL

SCALE 1–1/2"=1'–0"

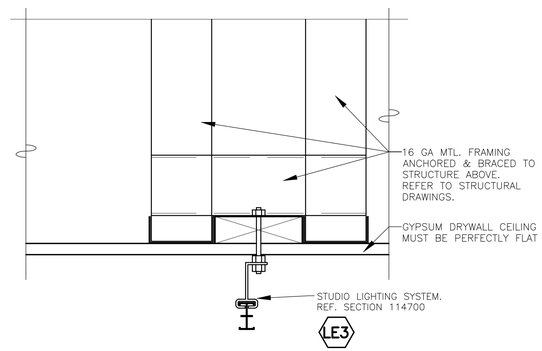

2 TYPICAL PHOTO LIGHT TRACK

SCALE NTS

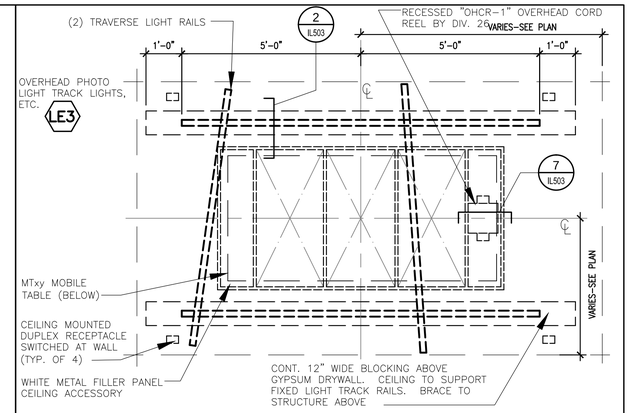

3 PHOTO LIGHT TRACK OVERHEAD

SCALE 1–1/2" = 1'–0"

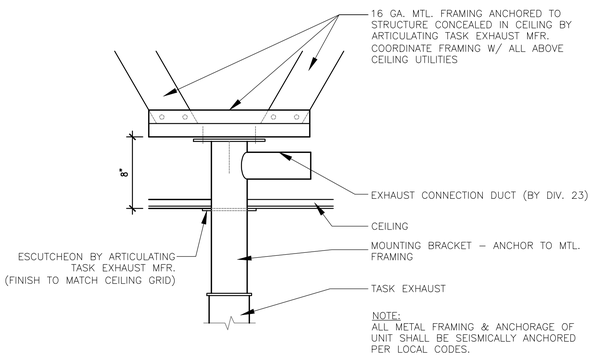

4 TASK EXHAUST MOUNTING DETAIL

SCALE NTS

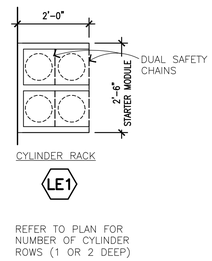

5 GAS CYLINDER RACK SYSTEM

SCALE 1/2" = 1'–0"

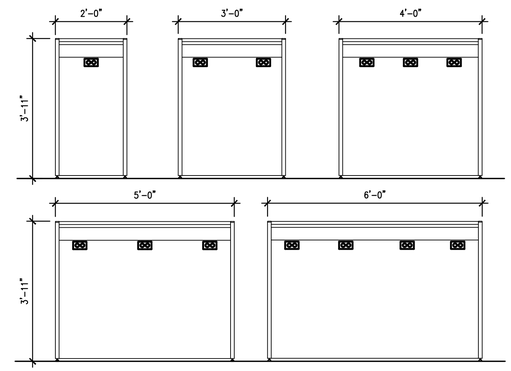

6 MAX WALL ELECTRICAL OUTLET LOCATIONS

SCALE 1/2" = 1'–0"

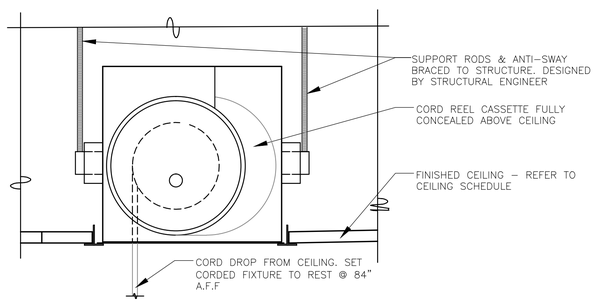

7 RECESSED CORD REEL (OHCR-1)

SCALE NTS

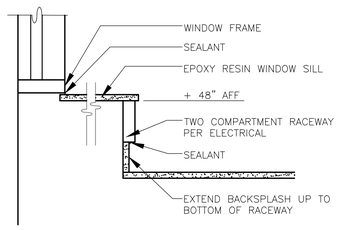

8 TYPICAL COUNTERTOP AT WINDOW SILL

SCALE 1/2"=1'–0"

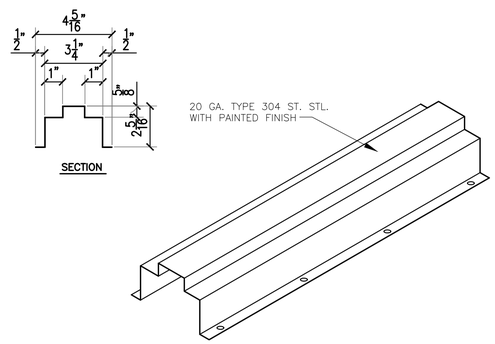

9 COVER PLATE FOR PEDAL PIPING

SCALE NTS

CRSA
649 E. South Temple
Salt Lake City, UT 84102
801.355.5915

MWL
McClaren, Wilson & Lawrie, Inc.
11798 North Lakeridge Parkway
Ashland, Va 23005
(804)228.7465
www.mwlarchitects.com

State of Utah
Department of Administrative Services
DFCM
Division of Facilities Construction & Management
4110 State Office Building
Salt Lake City, Utah 84114
Phone: (801) 538 - 3018
Fax: (801) 538 - 3267

DIVISION OF FACILITIES CONSTRUCTION AND MANAGEMENT
REVIEWED FOR CODE COMPLIANCE
SIGNATURE: Eric Ralph
DATE: 08-05-2014

STATUS
Not For Construction

ARCHITECT-ENGINEER STAMP

KEY PLAN

Project #: B13-024

DATE:	REVISION:
APRIL 21, 2014	BID SET
CHECKED BY	B.CARVER
DRAWN BY	B.WARREN / A.VIG

LAB DETAILS

IL503

VOLUME 1

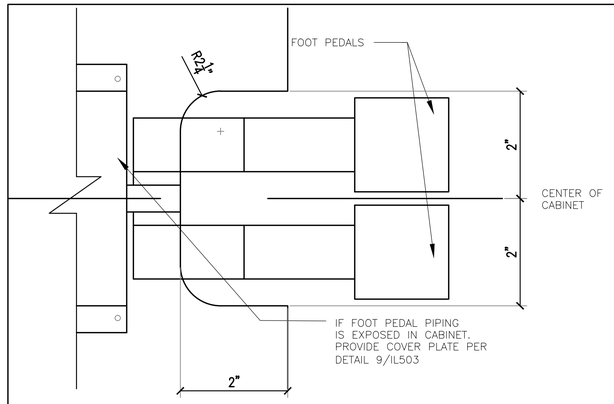

1 BASE CABINET NOTCH FOR FOOT PEDALS

SCALE NTS

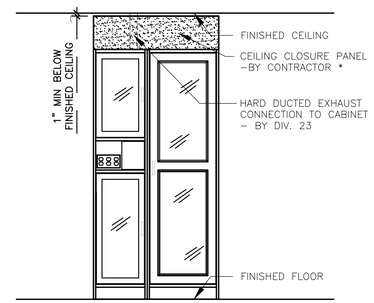

NOTES:
* NEW CEILING CLOSURE PANEL PROVIDED BY CONTRACTOR TO MATCH EXISTING CABINET MATERIAL AND FINISH

2 SUPERGLUE CABINET (ID4)

SCALE 1/2"=1'-0"

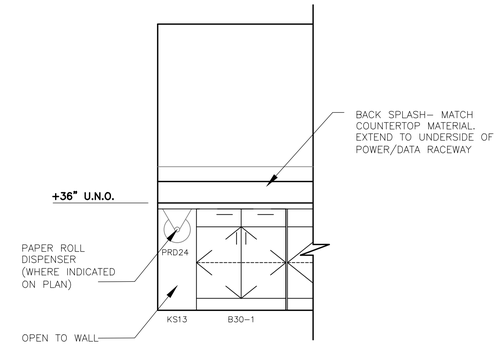

3 PRD ELEV. DETAIL @ FIXED LAB CASEWORK

SCALE 1/2"=1'-0"

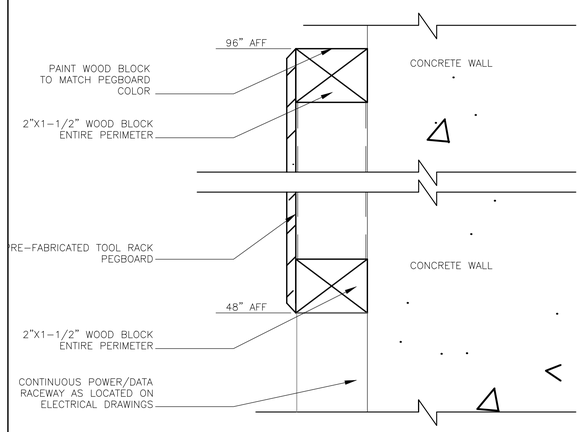

4 TOOL RACK SECTION

SCALE 6"=1'-0"

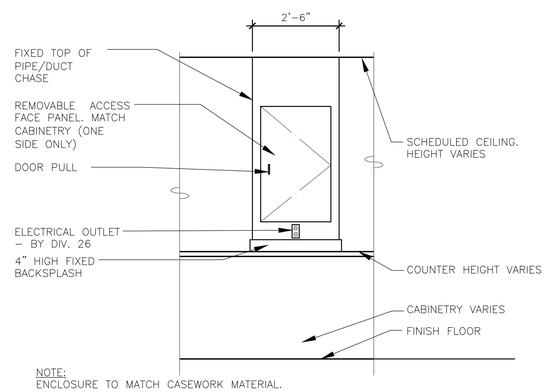

NOTE:
ENCLOSURE TO MATCH CASEWORK MATERIAL.

5 TYP. PIPE/DUCT CHASE ELEV. @ PENINSULAS

SCALE 1/2" = 1'-0"

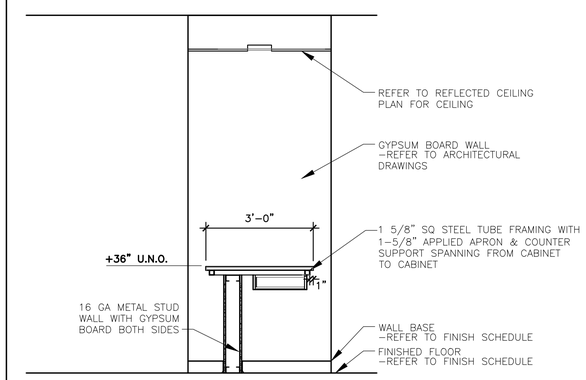

6 EVIDENCE INTAKE COUNTER SECTION

SCALE 1/2" = 1'-0"

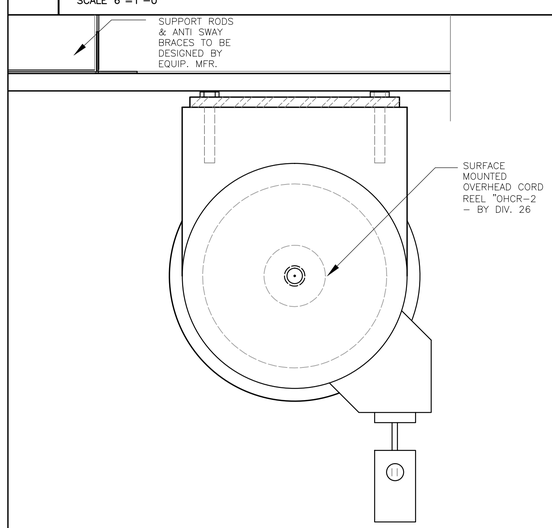

7 SURFACE MOUNTED CORD REEL (OHCR-2)

SCALE 3"=1'-0"

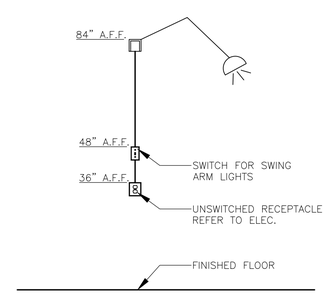

8 VEHICLE BAY DOCK LIGHT DETAIL

SCALE 1/2" = 1'-0"

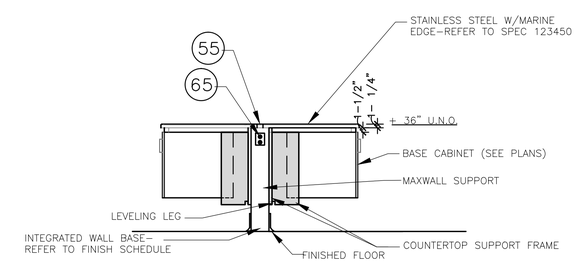

8 CANTILEVER WALL CABINETRY

SCALE 1/2" = 1'-0"

CRSA
649 E. South Temple
Salt Lake City, UT 84102
801.355.5915

MWL
McClaren, Wilson & Lawrie, Inc.
11798 North Lakeridge Parkway
Ashland, Va 23005
(804)228.7465
www.mwlarchitects.com

State of Utah
Department of Administrative Services
DFCM
Division of Facilities Construction & Management
4110 State Office Building
Salt Lake City, Utah 84114
Phone: (801) 538 - 3018
Fax: (801) 538 - 3267

DIVISION OF FACILITIES CONSTRUCTION AND MANAGEMENT
REVIEWED FOR CODE COMPLIANCE
SIGNATURE: Ernie Gelfe
DATE: 08-05-2014

STATUS
Not For Construction

ARCHITECT-ENGINEER STAMP

KEY PLAN

Project #: B13-024

DATE:	REVISION:
APRIL 21, 2014	BID SET
CHECKED BY	B.CARVER
DRAWN BY	B.WARREN / A.VIG

LAB DETAILS

IL504

VOLUME 1

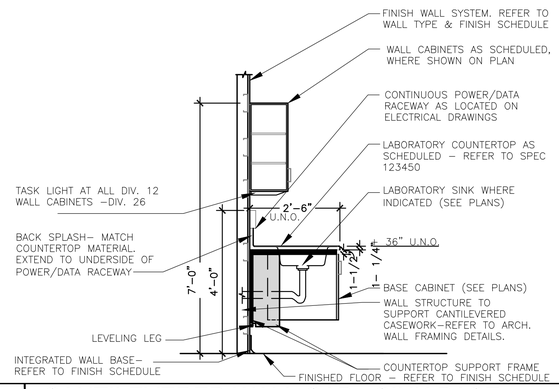

1 CANTILEVERED WALL CAB. -SINK BASE

SCALE 1/2" = 1'-0"

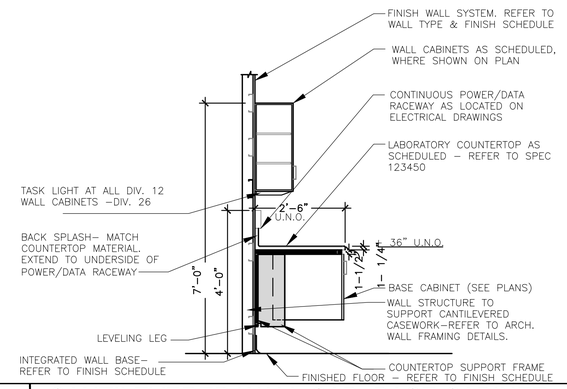

2 CANTILEVERED WALL CAB.-BASE CABINET

SCALE 1/2" = 1'-0"

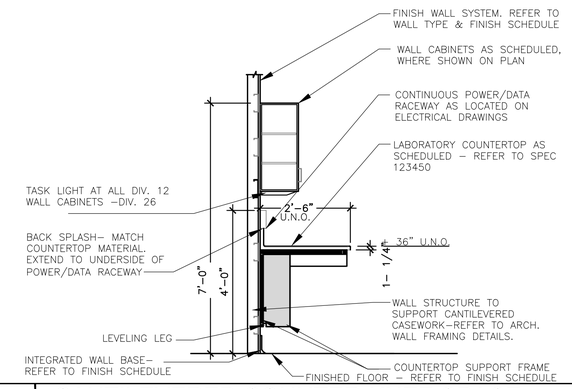

3 CANTILEVERED COUNTER-KNEE SPACE

SCALE 1/2" = 1'-0"

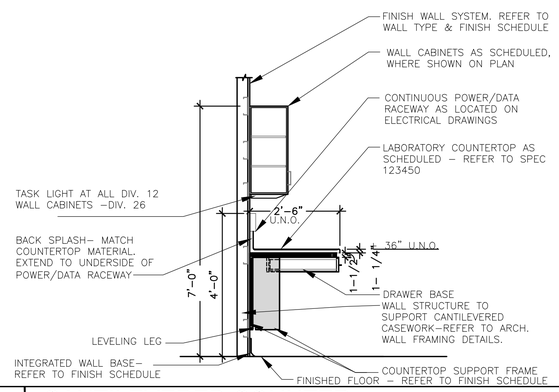

4 CANTILEVERED COUNTER - KNEE SPACE W/ DRAWER

SCALE 1/2" = 1'-0"

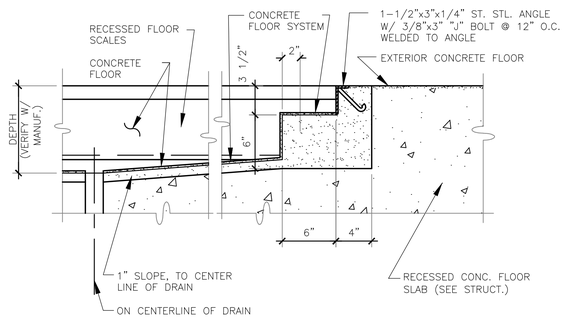

NOTE: VERIFY DEPTH, WIDTH, LENGTH, REQUIREMENTS AND ALL DIMENSIONS W/ FLOOR SCALE MANUFACTURER PRIOR TO INSTALLATION. COORDINATE ELECTRICAL REQUIREMENTS W/ ELECTRICAL DRAWINGS.

5 RECESSED SCALE

SCALE 1-1/2"

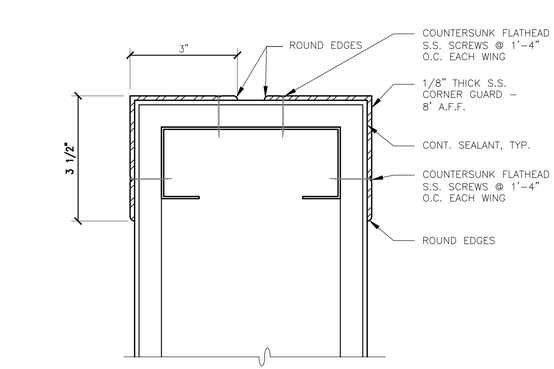

6 S.S. DOUBLE CORNER GUARD

SCALE 6"=1'-0"

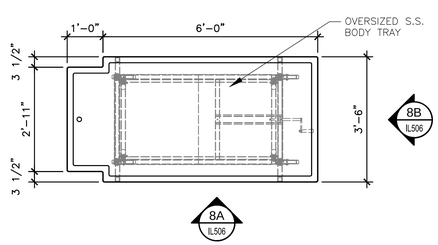

7 BARIATRIC DISSECTING STATION

SCALE 1/2" = 1'-0"

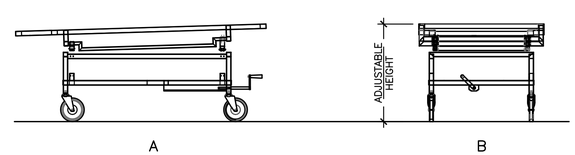

NOTE:
ALL S.S. CONSTRUCTION

8 BARIATRIC DISSECTING ELEVATIONS

SCALE 1/2" = 1'-0"

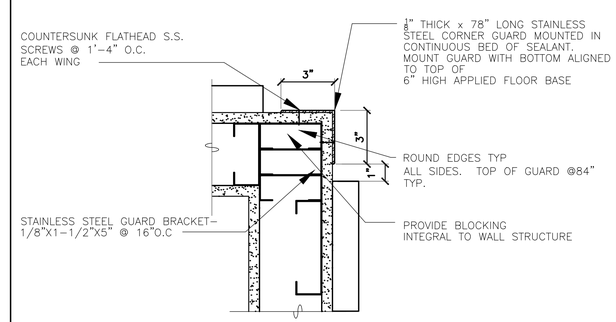

9 TYPICAL CORNER GUARD

SCALE 3" = 1'-0"

CRSA
649 E. South Temple
Salt Lake City, UT 84102
801.355.5915

MWL
McClaren, Wilson & Lawrie, Inc.
11798 North Lakeridge Parkway
Ashland, Va 23005
(804)228.7465
www.mwlarchitects.com

State of Utah
Department of Administrative Services
DFCM
Division of Facilities Construction & Management
4110 State Office Building
Salt Lake City, Utah 84114
Phone: (801) 538 - 3018
Fax: (801) 538 - 3267

DIVISION OF FACILITIES CONSTRUCTION AND MANAGEMENT
REVIEWED FOR CODE COMPLIANCE
SIGNATURE: Eric Ralph
DATE: 08-05-2014

STATUS
Not For Construction

ARCHITECT-ENGINEER STAMP

KEY PLAN

Project #: B13-024

DATE:	REVISION:
APRIL 21, 2014	BID SET
CHECKED BY	B.CARVER
DRAWN BY	B.WARREN / A.VIG

LAB DETAILS

IL505

VOLUME 1

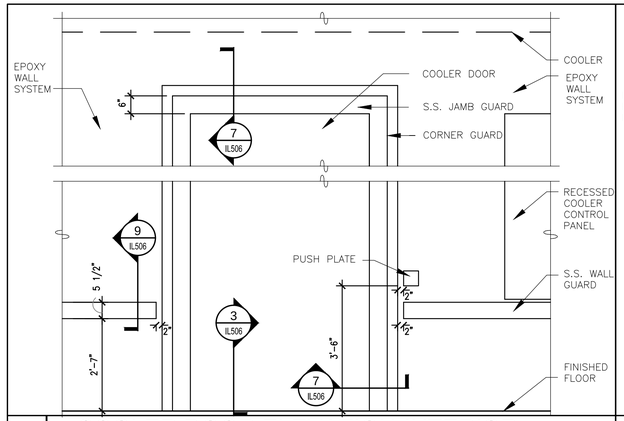

1 COOLER DOOR ELEVATION-INTERIOR

SCALE 1/2" = 1'-0"

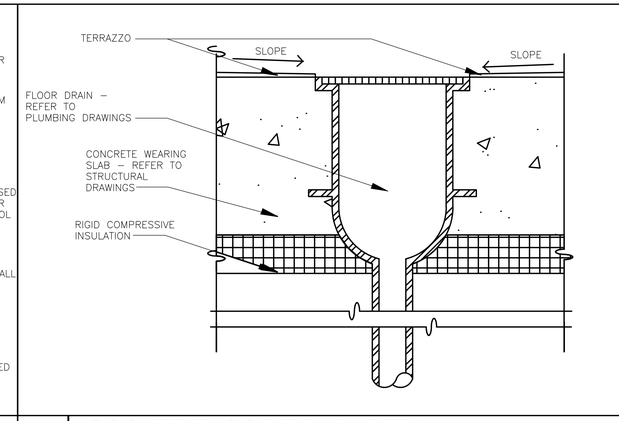

2 COOLER FLOOR DRAIN DETAIL

SCALE 3"=1'-0"

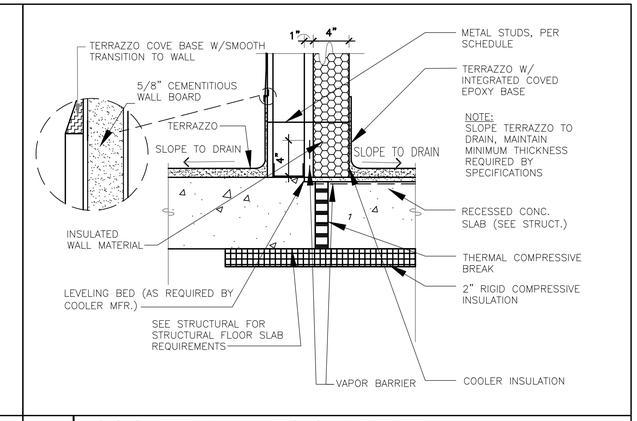

3 COOLER WALL TO SLAB DETAIL

SCALE 1-1/2"=1'-0"

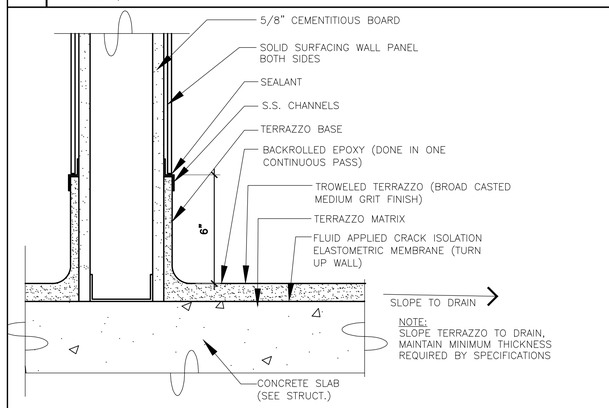

4 FLOOR SYSTEM SECTION

SCALE 1-1/2" = 1'-0"

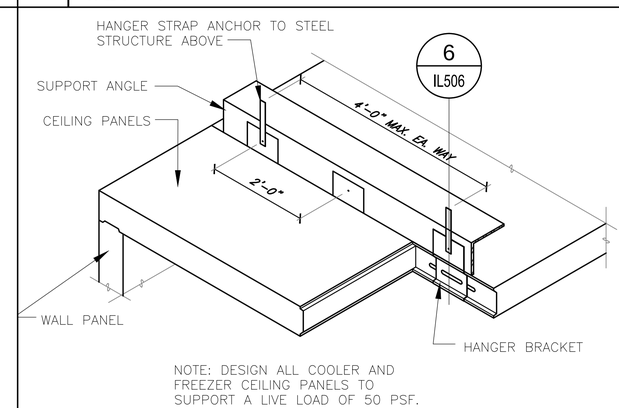

5 SUSPENDED COOLER CEILING

SCALE 3/4"=1'-0"

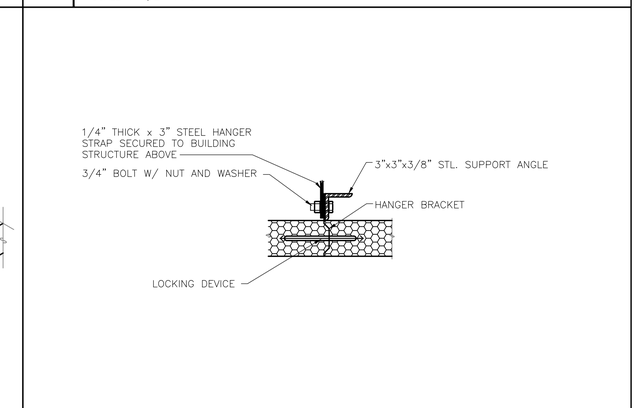

6 COOLER CEILING HANGER DETAIL

SCALE 1-1/2"=1'-0"

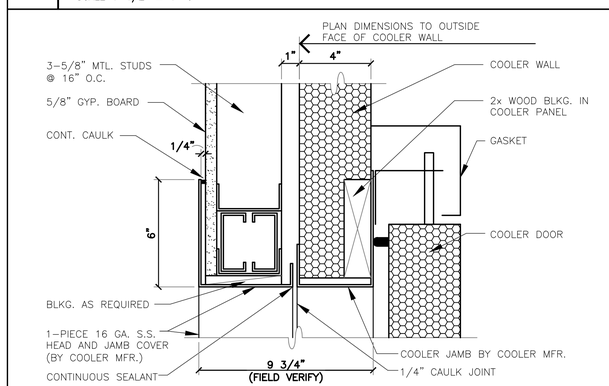

7 SLIDING DOOR COOLER JAMB & HEADER

SCALE 3" = 1'-0"

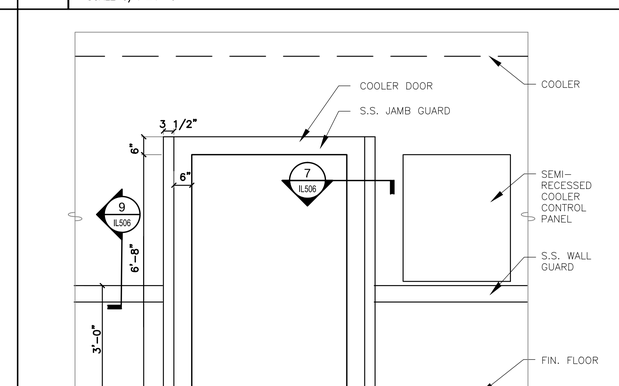

8 COOLER DOOR ELEVATION

SCALE 1/2" = 1'-0"

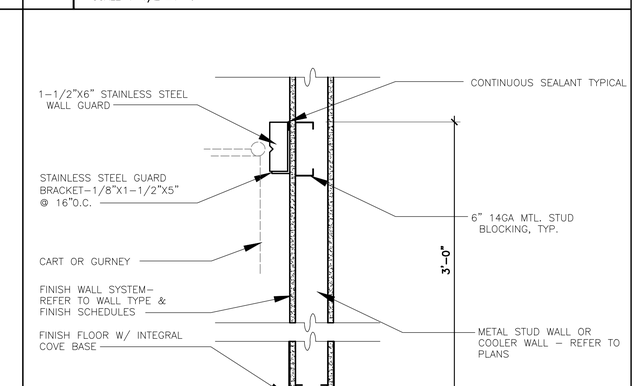

9 TYP. WALL GUARD

SCALE 1-1/2" = 1'-0"

CRSA
649 E. South Temple
Salt Lake City, UT 84102
801.355.5915

MWL
McClaren, Wilson & Lawrie, Inc.
11798 North Lakeridge Parkway
Ashland, Va 23005
(804)228.7465
www.mwlarchitects.com

State of Utah
Department of Administrative Services
Division of Facilities Construction & Management
4110 State Office Building
Salt Lake City, Utah 84114
Phone: (801) 538 - 3018
Fax: (801) 538 - 3267

DIVISION OF FACILITIES CONSTRUCTION AND MANAGEMENT
REVIEWED FOR CODE COMPLIANCE
SIGNATURE: Eric Ralph
DATE: 08-05-2014

STATUS
Not For Construction

ARCHITECT-ENGINEER STAMP

KEY PLAN

Project #: B13-024

DATE:	REVISION:
APRIL 21, 2014	BID SET
CHECKED BY	B.CARVER
DRAWN BY	B.WARREN / A.VIG

LAB DETAILS

IL506

VOLUME 1

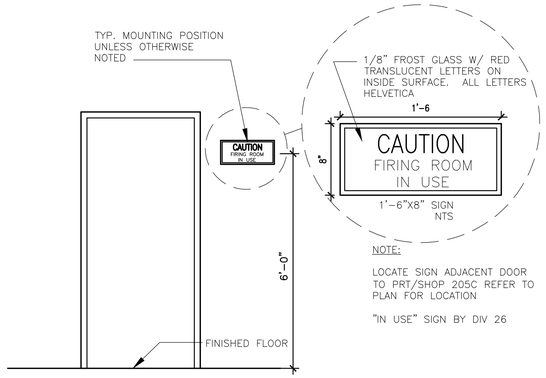

1 IN USE LIGHT

SCALE 1-1/2" = 1'-0"

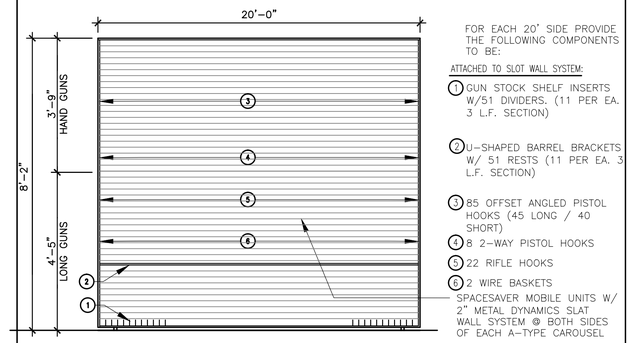

FOR EACH 20' SIDE PROVIDE THE FOLLOWING COMPONENTS TO BE:

ATTACHED TO SLOT WALL SYSTEM:

1. GUN STOCK SHELF INSERTS W/51 DIVIDERS. (11 PER EA. 3 L.F. SECTION)
2. U-SHAPED BARREL BRACKETS W/ 51 RESTS (11 PER EA. 3 L.F. SECTION)
3. 85 OFFSET ANGLED PISTOL HOOKS (45 LONG / 40 SHORT)
4. 8 2-WAY PISTOL HOOKS
5. 22 RIFLE HOOKS
6. 2 WIRE BASKETS

2 MOBILE GUN STORAGE SYSTEM

SCALE 1/2" = 1'-0"

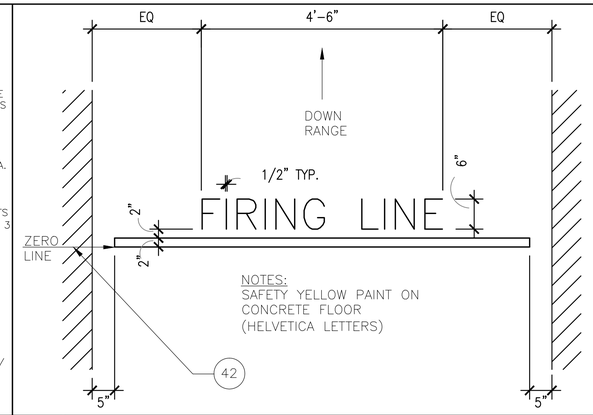

3 FIRING LINE DETAIL

SCALE 3/4" = 1'-0"

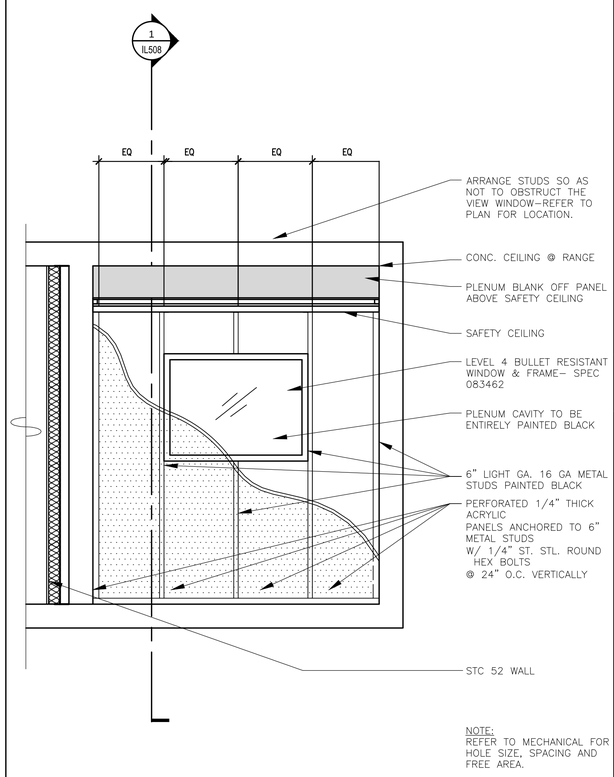

4 FIRING RANGE PLENUM

SCALE 1/2" = 1'-0"

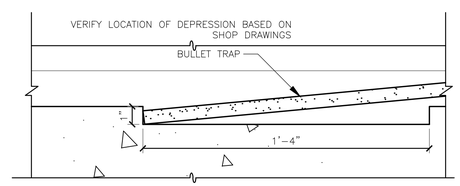

5 BULLET TRAP FLOOR DEPRESSION

SCALE 3"=1'-0"

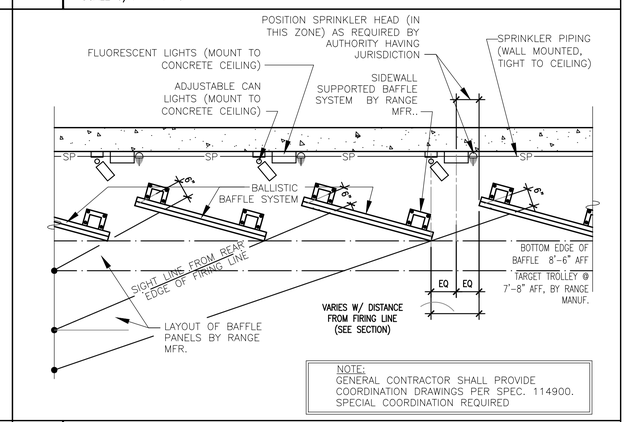

6 FIRING RANGE DETAIL

SCALE 1/2" = 1'-0"

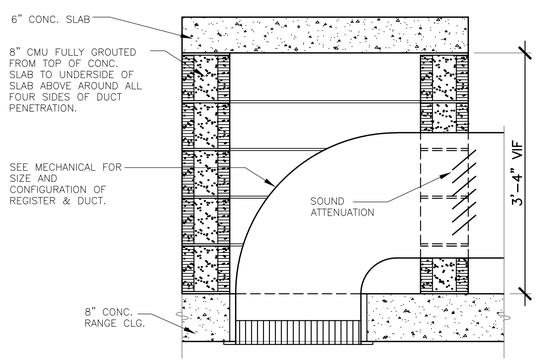

7 FIRING RANGE PENETRATION

SCALE 1" = 1'-0"

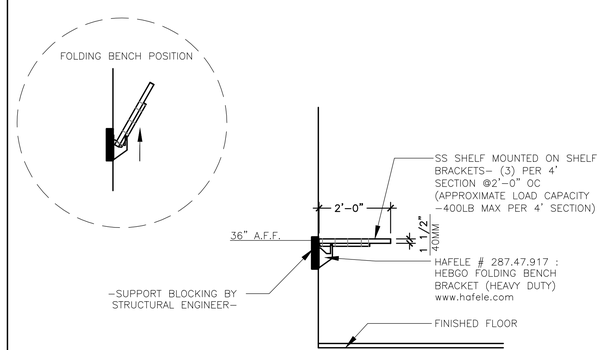

8 HEAVY DUTY FOLDING SHELF DETAIL

SCALE 1/2"=1'-0"

CRSA
649 E. South Temple
Salt Lake City, UT 84102
801.355.5915

MWL
McClaren, Wilson & Lawrie, Inc.
11798 North Lakeridge Parkway
Ashland, Va 23005
(804)228.7465
www.mwlarchitects.com

State of Utah
Department of Administrative Services
Division of Facilities Construction & Management
4110 State Office Building
Salt Lake City, Utah 84114
Phone: (801) 538 - 3018
Fax: (801) 538 - 3267

DIVISION OF FACILITIES CONSTRUCTION AND MANAGEMENT
REVIEWED FOR CODE COMPLIANCE
SIGNATURE: Eric Ralph
DATE: 08-05-2014

STATUS
Not For Construction

ARCHITECT-ENGINEER STAMP

KEY PLAN

Project #: B13-024

DATE:	REVISION:
APRIL 21, 2014	BID SET
CHECKED BY	B.CARVER
DRAWN BY	B.WARREN / A.VIG

LAB DETAILS

IL507

VOLUME 1

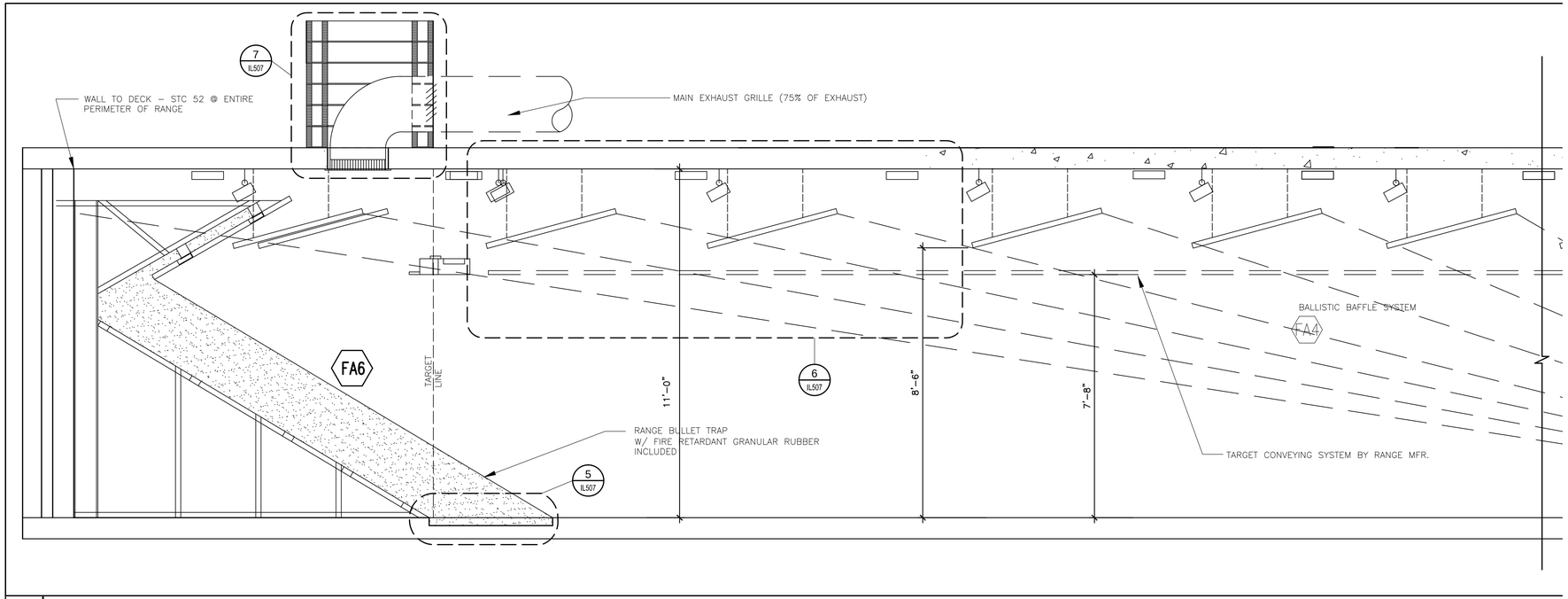

1 FIRING RANGE SECTION

SCALE 1/2"=1'-0"

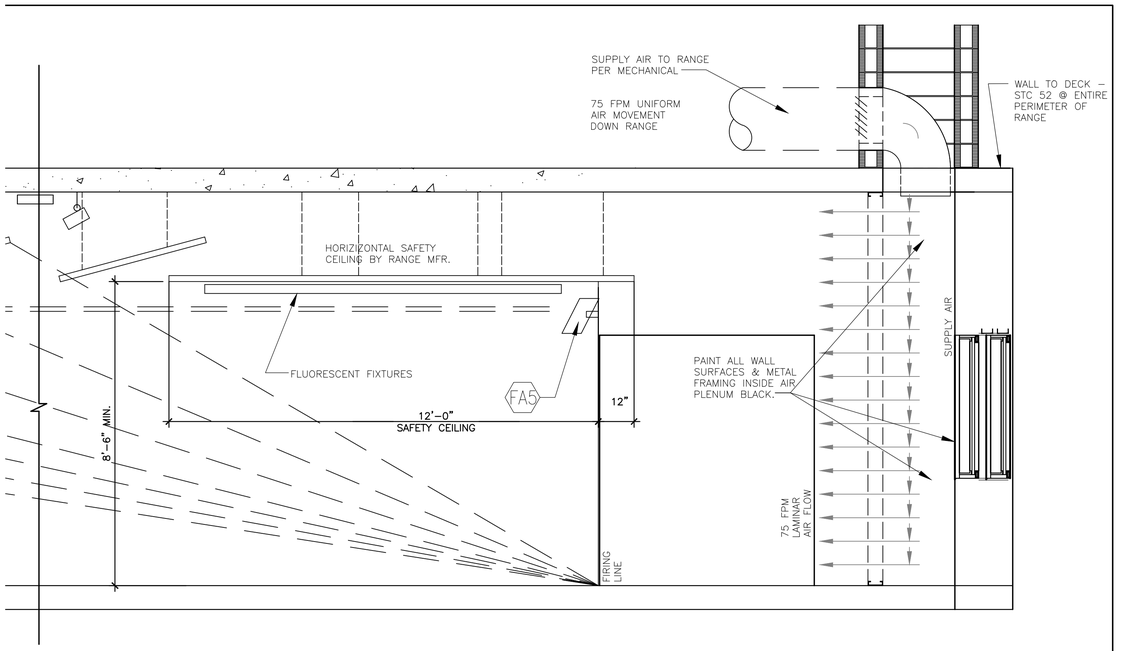

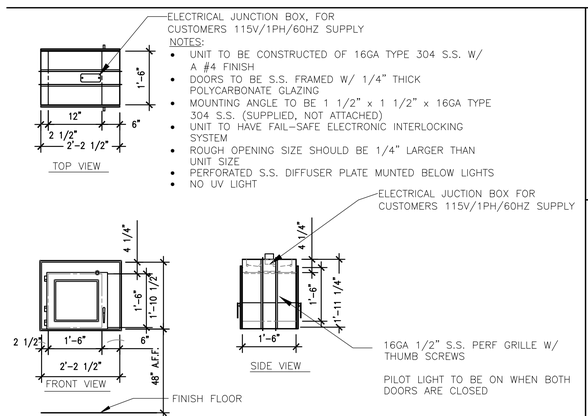

2 PASS-THRU CABINET

SCALE 1/2"=1'-0"

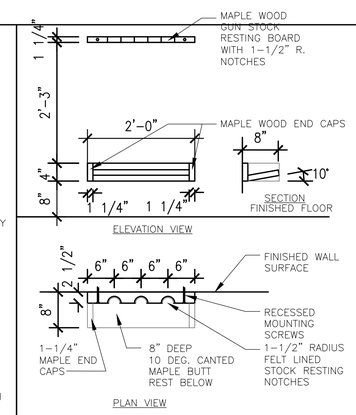

3 LONG GUN RACK DETAIL

SCALE 3/4"=1'-0"

CRSA
649 E. South Temple
Salt Lake City, UT 84102
801.355.5915

MWL
McClaren, Wilson & Lawrie, Inc.
11798 North Lakeridge Parkway
Ashland, Va 23005
(804)228.7465
www.mwlarchitects.com

State of Utah
Department of Administrative Services

DFCM
Division of Facilities Construction & Management
4110 State Office Building
Salt Lake City, Utah 84114
Phone: (801) 538 - 3018
Fax: (801) 538 - 3267

DIVISION OF FACILITIES CONSTRUCTION AND MANAGEMENT
REVIEWED FOR CODE COMPLIANCE
SIGNATURE: Ernie Galt
DATE: 08-05-2014

STATUS
Not For Construction

ARCHITECT-ENGINEER STAMP

KEY PLAN

Project #: B13-024

DATE:	REVISION:
APRIL 21, 2014	BID SET
CHECKED BY	B.CARVER
DRAWN BY	B.WARREN / A.VIG

LAB DETAILS

IL508

VOLUME 1

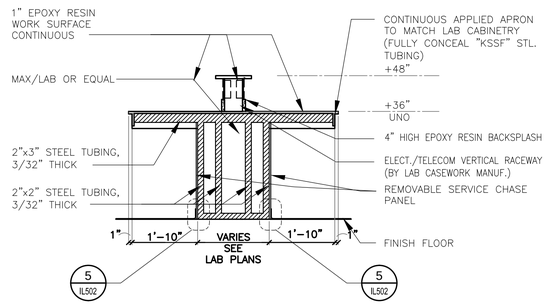

1 DOUBLE KSSF DETAIL

SCALE 1-1/2" = 1'-0"

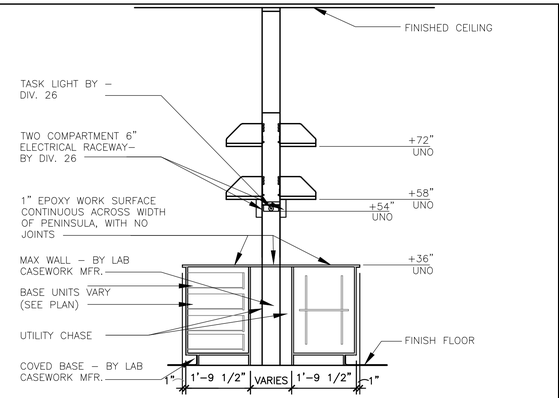

2 MAXWALL UPRT. SEC @ FIXED CASEWORK

SCALE 1/2" = 1'-0" (SHELVING)

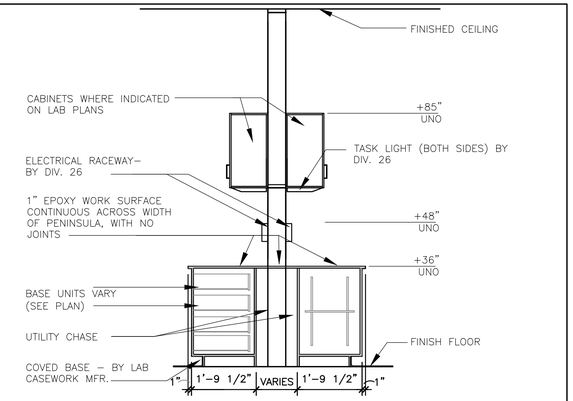

3 MAXWALL UPRT. SEC @ FIXED CASEWORK

SCALE 1/2" = 1'-0" (CABINETS)

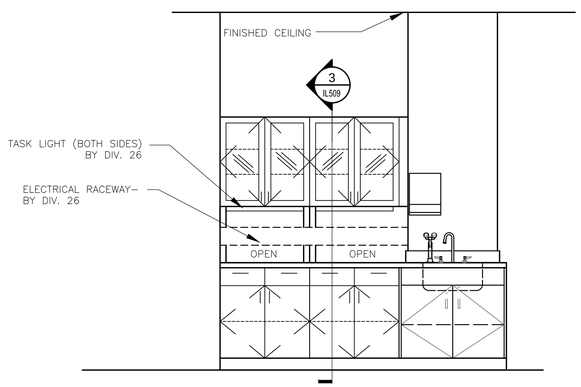

4 MAXWALL ELEVATION WITH OVERHEADS

SCALE 1/2"=1'-0"

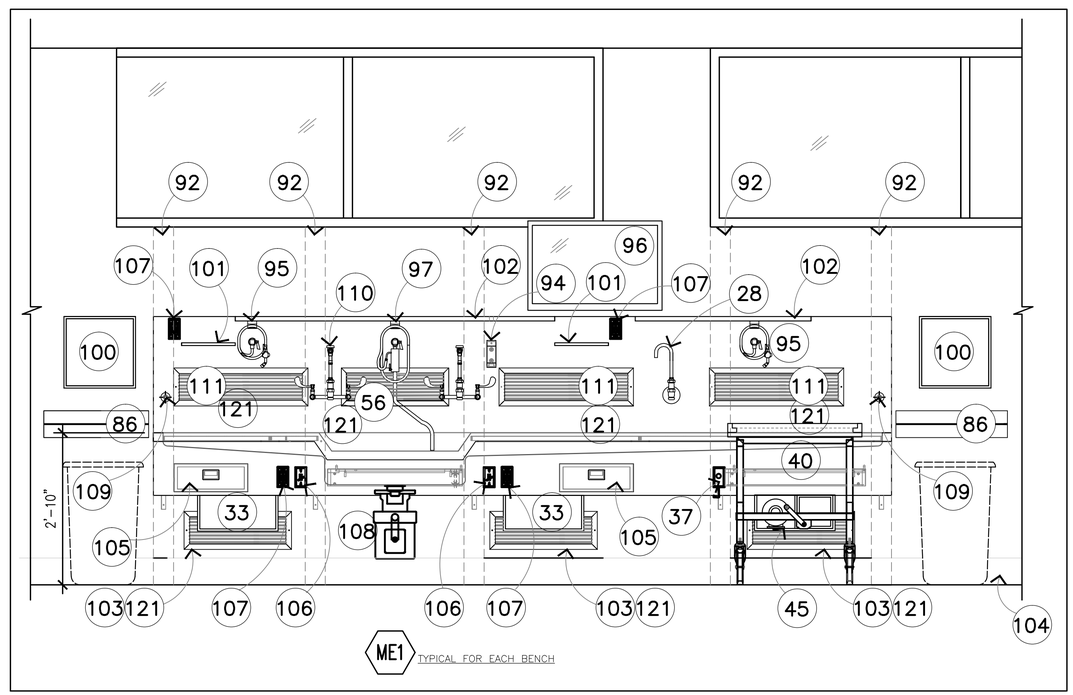

5 NOT USED

SCALE

6 AUTOPSY DISSECTION STATION

SCALE 3/4"=1'-0"

CRSA
649 E. South Temple
Salt Lake City, UT 84102
801.355.5915

MWL
McClaren, Wilson & Lawrie, Inc.
11798 North Lakeridge Parkway
Ashland, Va 23005
(804)228.7465
www.mwlarchitects.com

State of Utah
Department of Administrative Services
Division of Facilities Construction & Management
4110 State Office Building
Salt Lake City, Utah 84114
Phone: (801) 538 - 3018
Fax: (801) 538 - 3267

DIVISION OF FACILITIES CONSTRUCTION AND MANAGEMENT
REVIEWED FOR CODE COMPLIANCE
SIGNATURE: Ernie Calfe
DATE: 08-05-2014

STATUS
Not For Construction

ARCHITECT-ENGINEER STAMP

KEY PLAN

Project #: B13-024

DATE:	REVISION:
APRIL 21, 2014	BID SET
CHECKED BY	B.CARVER
DRAWN BY	B.WARREN / A.VIG

LAB DETAILS

IL509

VOLUME 1

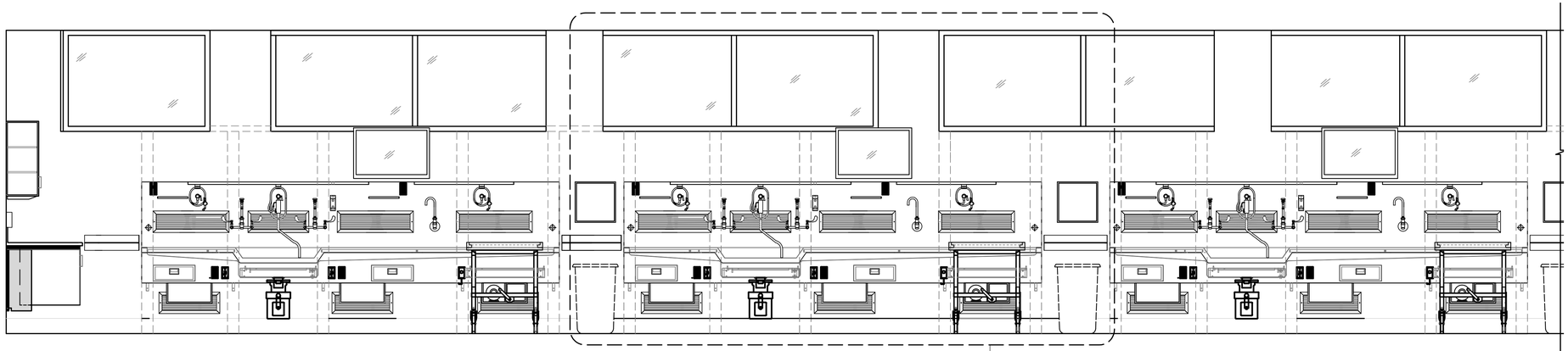

1 IL510 AUTOPSY/DECOMP SUITES
SCALE: 1/2" = 1'-0"

6 IL509

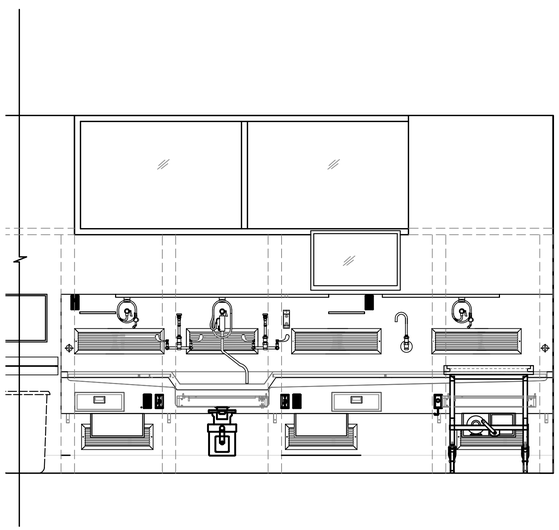

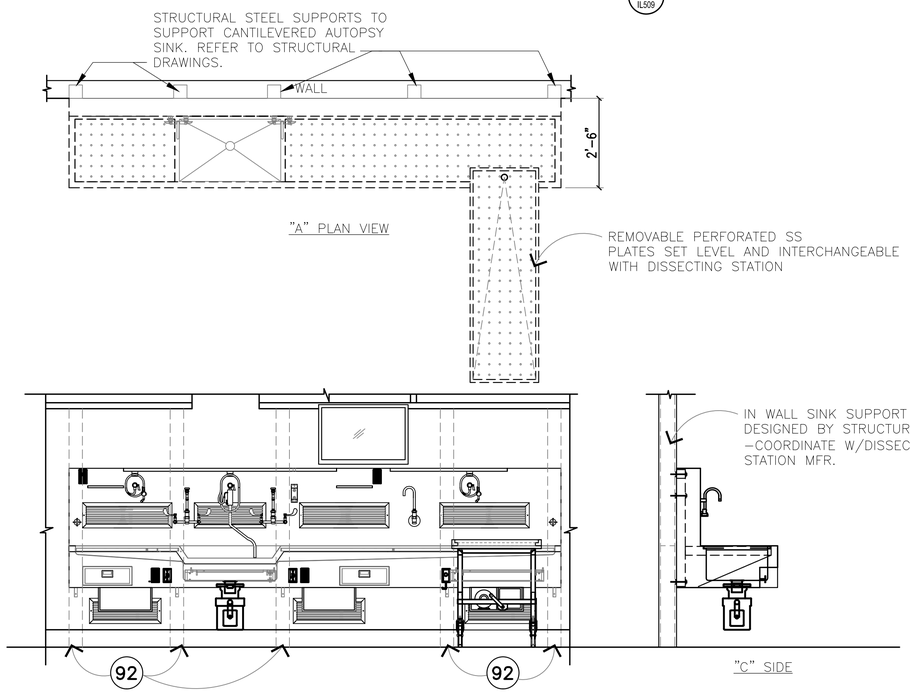

2 IL510 AUTOPSY STATION SUPPORTS
SCALE: 1/2" = 1'-0"

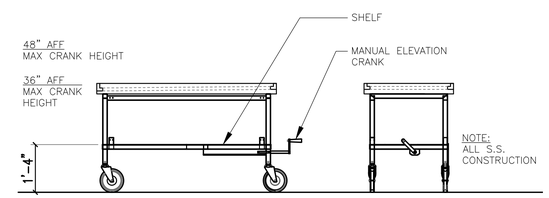

3 IL510 MOBILE DISSECTION WING
SCALE: 1/2" = 1'-0"

KEY SYMBOLS

- (L) LOCKING
- (M) MONITOR TO BMS
- (EW) DECK MOUNTED DRENCH HOSE EYEWASH FIXTURE
- (CA) COMPRESSED AIR
- (XXX) MARINE EDGE COUNTER ELEVATION IN INCHES
- (XX) NON-MARINE EDGE COUNTER ELEVATION IN INCHES
- (X) KEY NOTES
- (XX) EQUIPMENT
- XXX ROOM NUMBERS

ABBREVIATIONS

BFF	BELOW FINISHED FLOOR
HD	HUB DRAIN
FD	FLOOR DRAIN
FFD	FLUSHABLE FLOOR DRAIN
SS	STAINLESS STEEL

KEY NOTES

1. PAPER TOWEL DISPENSER- SPEC. 116000
2. COAT HOOKS MOUNTED @54" AFF-SPEC 116000
3. SAFETY SUPPLY CABINET-SPEC 116000
4. INLET PORT FOR HYDROGEN GENERATOR
5. OPEN TO FINISH WALL SURFACE
6. EPOXY DRYING RACK – 18"x36" – SPEC 123450
7. FILLER PANEL – MATCH CASEWORK MATERIAL
8. OMIT FRONT AND BACK APRON FOR 34" HIGH UNDER COUNTER EQUIPMENT.
9. SS SHELVING-SPEC 116000
10. 2 1/2" CORD GROMMET-SPEC 123450
11. CONTROL PANEL FOR FA7 (TARGET TROLLEY)
12. 2'X4' STAINLESS STEEL FOLD DOWN SURFACE – REFER TO DETAIL 8/IL507
13. COUNTERTOP MOUNTED COMPRESSED AIR (CA) TURRET
14. COLD WATER HOSE BIB @54" AFF- BY DIV. 22
15. HIGH DENSITY SHELVING- BY DIV. 10
16. KSSF SUPPORT FRAME- REFER TO DETAIL 9/IL500
17. HOT & COLD MIXING STATION-BY DIV. 22 (W/ 30' OF HOSE)
18. MOBILE LIFT PARK
19. UTILITY SINK- BY DIV. 22
20. UNDER COUNTER KNEE WALL SUPPORT -REFER TO ARCHITECTURAL
21. SPILL CART-SPEC 116000
22. SUPPORT LEG-BY DIV. 12
23. COAT RACK & SHELF-SPEC 116000
24. WALL MOUNTED PAPER ROLL DISPENSER WITH PLASTIC LAMINATE COVERED PLYWOOD BACKBOARD. 36"HX12"H MOUNTED AT 48" AFF TO BOTTOM.
25. DOUBLE KSSF- REFER TO DETAIL 1/IL509
26. ELEVATION TRANSITION POINT
27. MILLWORK-BY DIV. 6
28. FORMALIN SPIGOT
29. UNDERCOUNTER TYPE I WATER POLISHER-BY DIV. 22
30. ALL STAINLESS STEEL CASEWORK IN AUTOPSY SUITES WILL HAVE MARINE EDGE COUNTER TOPS.
31. GAS MANIFOLD @66" A.F.F. (BOTTOM) -BY DIV. 22
32. FLOOR DRAIN- BY DIV. 22
33. DISSECTION TABLE SHELF BY MFR
34. STAINLESS STEEL SCRUB SINK- BY DIV. 22
35. LEVEL 4 BULLET RESISTANT DOOR/FRAME-SPEC 083950
36. "IN USE" LIGHT-DETAIL-1/IL507-BY DIV. 26
37. PUMP CONTROL FOR FORMALIN DISPENSOR
38. MAPLE COUNTER-2" THICK W/ 3/4" X 3 1/2" MAPLE BACK SPLASH W/ 4" LEADING EDGE OVERHANG- SPEC 123450
39. 8" DIA. EXHAUST DUCT FROM PROJECTILE RECOVERY TANK. DIV. 23 TO CONNECT EXHAUST
40. MOBILE DISSECTING WING-SPEC 117810
41. WALL MOUNTED LONG GUN RACK – REFER TO 3/IL508
42. PAINTED 3" NUMBER AND ARROW WHITE PAINT STENCILED ON RUBBER PANELS AT 1 YARD INCREMENTS MEASURED FROM THE ZERO POINT OF THE FIRING LINE. ACCURACY REQUIRED WITHIN 1/16"– REFER TO 3/IL507
43. OPEN ALL OF THE WAY THROUGH
44. GAS ANNUNCIATOR PANEL- BY DIV. 22
45. FORMALIN CONTAINER AND DISPENSING PUMP
46. PAINTED FIRING LINE- REFER TO DETAIL 3/IL507
47. FLUSHING FLOOR DRAIN-BY DIV. 22
48. CONTROLS FOR RANGE AIR HANDLING SYSTEM- DIV. 23
49. 36"L X 12" W X 1" THICK MAPLE WOOD SHELF MOUNT & 48" AFF-SPEC 123450
50. CW CONNECTION @ 48" A.F.F.-REFER TO PLUMB. VERIFY LOCATION BASED ON APPROVED SHOP DRAWINGS OF PRT
51. MANUAL OPERATED BLACKOUT SHADE-SPEC 122413
52. LOW ELEVATION EXHAUST- REFER TO MECHANICAL
53. BUG ZAPPER MOUNTED @ +84" A.F.F.-BY DIV 26 -SPEC 116000
54. HAMPER- NIC
55. 2-1/2" X 18" CORD SLOT
56. EXHAUST VENTS BY DISSECTING STATION MFR. (VERIFY 8"X24") -COORDINATE DUCTWORK WITH DIV. 23
57. ACID VENT PIPE- REFER TO DETAIL 2/IL500 AND MECHANICAL
58. ADJUSTABLE TOOL RACK-SPEC 114900 REFER TO DETAIL 4/IL507
59. 12"X12"X12" FLOOR SINK-BY DIV. 22
60. PRESSURE DIFFERENTIAL INDICATOR @ 54" AFF- BY DIV. 23
61. LEVEL 4 BULLET RESISTANT WINDOW & FRAME- SPEC 085653
62. DIRECT CONNECT EXHAUST- BY DIV. 23
63. DIGITAL READOUT FOR SCALE-SPEC 117810
64. ACID VENT DUCT- REFER TO TACDx ELEVATION ON IL004- BY DIV. 23
65. BELOW COUNTER RECEPTACLE RECESSED INTO SERVICE CLOSURE PANEL- REFER TO ELECTRICAL DRAWINGS.
66. TRENCH DRAIN- BY DIV. 22
67. USER CONTROLLED AIR FLOW SWITCH-BY DIV. 23
68. BULLET TRAP/RANGE SIGN MOUNTED AT 60" AFF TO BOTTOM-SPEC. 114900
69. PRT SIGN MOUNTED AT 60" AFF TO BOTTOM. -SPEC. 114900
70. WALL MOUNTED FLAT PANEL MONITOR-BY DIV. 27
71. COOLER CONTROL PANEL
72. IN-WALL FLUSH VALVE FOR FLUSHING FLOOR DRAINS – BY DIV. 22
73. EXISTING AMMO STORAGE SHELVING SYSTEM TO BE RELOCATED TO NEW FACILITY BY CONTRACTOR
74. BACKDRAFT EXHAUST GRILLE- BY DIV. 23 REFER TO MECH. FOR SIZE, MOUNT ABOVE COUNTERTOP BACKSPLASH
75. ADA COMPLIANT S.S. SINK-BY DIV. 22
76. REMOVABLE EVIDENCE RACK MOUNTED TO MOBILE TABLE-REFER TO DETAIL A8/IL501-SPEC 123450
77. UMBILICAL SERVICE CHASE-SPEC 123450
78. DIRECT CONNECT PRT TO CW
79. COMPRESSED AIR- BY DIV. 23
80. TYPE 3 RO WATER FAUCET- COUNTER MOUNTED
81. TYPE 1 DI WATER POLISHER- WALL MOUNTED
82. GLASS WALL PANEL-REFER TO ARCH.
83. HUB DRAIN FOR BODY FREEZER CONDENSATE BY DIV. 22
84. HUB DRAIN- BY DIV. 22
85. MONITOR AND INTERCOM TO OUTSIDE PEDESTAL – BY DIV. 26
86. S.S. WALL GUARD – REFER TO DET. 9/IL506. IN ROOMS 125, 125A AND 125B S.S. WALL GUARDS ARE TO BE BY COOLER MFR.
87. S.S. CORNER GUARD – REFER TO DET. 9/IL505
88. ADJUSTABLE DOCK LIGHT- BY DIV. 26
89. X-RAY ROOM TO BE R.F. SHIELDED PER QUALIFIED PHYSICIST CONSULTANT PRIOR TO CONSTRUCTION.
90. INTEGRAL COUNTERTOP SIDE SPLASH
91. MOP AND BROOM HOLDER RACK-SPEC. 116000
92. STEEL STRUCTURE TO SUPPORT DISSECTING STATION -BY STRUCTURAL ENGINEER
93. APPROXIMATE LOCATION OF EVAPORATING UNITS IN COLD ROOMS MOUNTED NEAR CEILING
94. SCALE POLE BRACKET-SPEC 117810
95. SPRAY HOSE ASSEMBLY – SPEC. 117800
96. MONITOR MOUNTED ON ARTICULATING SWIVEL ARM BRACKET-BY DIV. 27
97. HYDRO ASPIRATOR – SPEC. 117810
98. STUB FOR FUTURE DIRECT EXHAUST AND SNORKEL CONNECTION- BY DIV. 23
99. 3' H X 4' W MARKER BOARD-SPEC. 101100
100. ARTICULATING MARKER BOARD-SPEC 116000
101. S.S. SHELF – 12"L x 10"D
102. S.S. SHELF – 11"D, PROVIDE HOLE IN SHELF FOR SCALE POST AND ALIGN WITH SCALE POST BRACKET
103. MATCHING BACK DRAFT WALL VENTS SUPPLIED BY DISSECTION TABLE MFR SPEC 117810 – DIV. 23 WILL CONNECT THE EXHAUST.
104. 6" INTEGRAL WALL BASE- REFER TO FINISH SCHEDULE
105. INSTRUMENT DRAWER
106. DISPOSAL SWITCH
107. GFCI OUTLET W/ WEATHERPROOF COVER
108. 2 HP DISPOSAL- SPEC. 117810
109. END RINSE CONTROL VALVE
110. HW & CW MIXING FAUCET
111. EXHAUST VENTS BY DISSECTING STATION MFR. (8"X30") -COORDINATE DUCTWORK WITH DIV. 23
112. PASS THROUGH CABINET WITH VISION DOORS SPEC 116000- REFER TO DETAIL 2/IL508
113. ABOVE COUNTER RECEPTACLE RECESSED INTO SERVICE CLOSURE PANEL OR CHASE- REFER TO ELECTRICAL DRAWINGS.
114. STAINLESS STEEL CANOPY-BY DIV. 23
115. CURTAIN AND TRACK- BY DIV. 10
116. MARBLE TABLE – SPEC. 116000
117. TASK LIGHT- BY DIV. 26
118. LIQUID NITROGEN DEWAR, NIC
119. 1" DIA. HOLE W/CAP FOR DI WATER DELIVERY DEVICE.
120. (2) PADLOCK RACK MOUNTED ON WALL @54" AFF AND 48" AFF
121. EXHAUST VENTS TO BE HAVE OPPOSED BLADE DAMPER ACCESSIBLE TROUGH THE FACE OF THE GRILL FOR AIR BALANCING -BY DISSECTING TABLE MFR
122. POWER FROM BELOW- BY DIV. 26

CRSA
649 E. South Temple
Salt Lake City, UT 84102
801.355.5915

MWL
McClaren, Wilson & Lawrie, Inc.
11798 North Lakeridge Parkway
Ashland, Va 23005
(804)228.7465
www.mwlarchitects.com

State of Utah
Department of Administrative Services
Division of Facilities Construction & Management
4110 State Office Building
Salt Lake City, Utah 84114
Phone: (801) 538 - 3018
Fax: (801) 538 - 3267

DIVISION OF FACILITIES CONSTRUCTION AND MANAGEMENT
REVIEWED FOR CODE COMPLIANCE
SIGNATURE: Ernie Gelfe
DATE: 08-05-2014

STATUS
Not For Construction

ARCHITECT-ENGINEER STAMP

KEY PLAN

Project #: B13-024

DATE:	REVISION:
APRIL 21, 2014	BID SET

CHECKED BY	B.CARVER
DRAWN BY	B.WARREN / A.VIG

LAB DETAILS

IL510

VOLUME 1