State of Utah

GARY R. HERBERT
Governor

SPENCER J. COX
Lt. Governor

Department of Administrative Services
KIMBERLY K. HOOD
Executive Director

Division of Facilities Construction and Management
BRUCE WHITTINGTON
Interim Director

Addendum No. 3

Date:	May 14, 2015
To:	Contractors
From:	Rick James – Project Manager, DFCM
Reference:	Unified State Laboratory – Module 2 Department of Public Safety Department of Health Department of Agriculture and Food DFCM Project No. 13020300
Subject:	**Addendum No. 3**

Pages	Addendum Cover Sheet	1	page
	Architect's Addendum No. 1	308	pages
	Total	309	pages

Note: This Addendum shall be included as part of the Contract Documents. Items in this Addendum apply to all drawings and specification sections whether referenced or not involving the portion of the work added, deleted, modified, or otherwise addressed in the Addendum. Acknowledge receipt of this Addendum in the space provided on the Bid Form. Failure to do so may subject the Bidder to Disqualification.

3.1 SCHEDULE: There are no project schedule changes.

3.2 GENERAL ITEMS: See Architect's Addendum No. 1 dated May 8, 2015.

CRSA
ARCHITECTURE · PLANNING · INTERIORS
649 E SOUTH TEMPLE · SLC, UT 84102 · 801.355.5915 · www.crsa-us.com

Addendum #1

PROJECT NAME: Unified State Laboratory Module 2 **DATE: May 8, 2015**

CRSA Project #.:13-024
DFCM Project #: 13020300

FROM: CRSA
649 E. South Temple
Salt Lake City, Utah 84103
(801) 355-5915
Fax (801) 355-9885

TO: All Bidders

The original specifications and drawings, labeled "Bid Set", dated April 21, 2014 for the project referenced above are amended by the following content and form a part of the Contract Documents.

Receipt of this addendum shall be acknowledged by inserting its number and date in the space provided on the bid form.

Attachments:

- Revised sheets: S101B, S103A, S104A, S104C, S503, S604, S606, S607, S609, S705, AE101A, AE101A.D, AE101B, AE102B, AE102B.D, AE103A, AE103A.D, AE104, AE109A, AE109B, AE109C, AE110A, AE110B, AE110C, , AE112B, AE113A, AE113B, AE113C, AE114B, AE115, AE120, AE121, AE201, AE202, AE433, AE501, AE503,AE606, IL001, IL002, IL100, IL101, IL102, IL103, IL104, IL105, IL106, IL107, IL108, IL109, IL110, IL111, IL500, IL501, IL502, IL503, IL504, IL505, IL506, IL507, IL508, IL509, IL510, MH102B, MH103A, MH105B, MP101A, MP101B, PE101B, PE101C, PE102A, PE102B, PE102C, PW102A, PW102B, PW102C, EE001, EE503, EE504, EE601, ES101, ES102, EP101A, EP101B, EP101C, EP101D, EP102A, EP102B, EP102D, EP103A, EP103B, EP104, EP105, EP402, EP601, EP602, EP603, EP604, EP605, EP606, EP608, EP609, EP610, EP611, EP612, EP613, EP614, EP615, EP619, EP626, EP629, EL101D, EY101A, EY101B, EY101C, EY102B, EY501, EJ101A, EJ101B, EJ102A, EJ102B, EJ103B, EJ301, EJ302, EJ501, EJ601, EJ602, EK501, FA101A, FA101B, FA102B, FA103A, FA103B, FA104, FA601, TA001, TA002, TA501, TA601,
- Mechanical Narrative (2) pages on 8-1/2x11.
- Electrical Narrative & Specifications: (12) pages on 8-1/2x11.

Changes to Prior Addenda:

1. None.

Changes to Procurement Requirements:

1. None.

Changes to Contracting Requirements:

1. None.

Changes to Specifications Div 02-14:

1. Section 074213.13 Part 2 Products: Subject to requirements the following are approved manufacturers:
    a. Firestone (Basis of Design)
    b. MBCI
    c. Berridge

2. Section 074213.53 Part 2 Products: Subject to requirements the following are approved manufacturers:
    a. Firestone (Basis of Design)
    b. MBCI
    c. Berridge
    d. Centria
3. Section 114700 Revised.
4. Section 114900 Revised
5. Section 115353 Revised
6. Section 116000 Revised
7. Section 117810 Revised
8. Section 123450 Revised
9. Section 130800 Revised
10. See attached changes to electrical specifications.

Changes to Architectural Drawings:

1. AE101A: Added walls.
2. AE101A.D: Added dimensions.
3. AE101B: Changed a wall type.
4. AE102B: Added wall under counter.
5. AE102B.D: Added dimension for wall.
6. AE103A: Add detail call out, deleted wall & added sill.
7. AE103A.D: Added column call out.
8. AE104: Added detail call out.
9. AE109A: Revised ceiling.
10. AE109B – AE110C: Added ceiling components and coordinated light locations.
11. AE112B, AE113A, AE113B, AE113C, AE114B & AE115: Revised slab edge.
12. AE120-AE121: Added call outs & misc coordination.
13. AE201-AE202: Added trim and keynotes.
14. AE402: Updated elevations.
15. AE433: Changes to elevator / shaft.
16. AE501 & AE503: Added detail(s).
17. AE606: Changed glass type.
18. Laboratory Drawings: The laboratory drawings have been significantly updated such that entire content of the sheets have changed.
19. See attached Structural, Laboratory, Mechanical, Plumbing & Electrical drawings.

End of Addendum 1

SECTION 11 47 00

PHOTOGRAPHIC EQUIPMENT

PART 1 - GENERAL

1.1 Summary

A. Furnish and install all studio equipment as shown and specified. Divisions 23 and 26 shall be responsible for final connections of fixtures, and accessories specified herein.

B. Work Included: Work of this Section includes all labor, materials, equipment and services necessary to provide and install the photo laboratory equipment as shown on the drawings and specified herein, including but not limited to, the following:

1 Service fixtures supplied as part of this work. Field connection of fixtures is included under electrical work of Division 26.

2. All fixtures shall be individually factory tested. All fixtures shall be designed to minimize exposed surfaces on which dust, dirt and airborne contaminants may collect, and to facilitate cleaning and maintenance of the service fixture.

3. Electrical fixtures specified shall be turned over to the Division 26 contractor for installation.

4. Overhead Studio Rail & Lighting System (**Equipment number LE3)** herein applies to:

a. **SEM - 211A**
b. **PHOTO 3 - 212C**
c. **TRACE 3 - 213A**

C. Related Work: The completion of the work described in this Section may require work in or coordination with other Sections of these specifications. The Contractor and the subcontractor will be responsible for identifying and including all related work in other Sections of these specifications and/or drawings necessary for a complete installation of the work described in this Section. These related sections include, but are not limited to the following:

1. Drawings and general provisions of Contract, including General and Supplementary Conditions and Division 1 Specifications, apply to this Section.
2. Final electrical connections to photographic equipment, by Division 26.
3. Wall or ceiling blocking for photographic equipment.

4. Ceiling roughing and finish for ceiling-mounted lighting equipment by Division 6.
5. System commissioning is a part of the construction process. Documentation and testing of systems, as well as training of the Owner's operation and maintenance personnel, is required in cooperation with the Commissioning Consultant. Substantial Completion is dependent on successful completion of all commissioning procedures, documentation, and issue closure. Refer to Commissioning Specification Section for commissioning requirements.

1.2 SUBMITTALS

A. Submit under provisions of Division 1, General Requirements.

B. Product Data: Provide manufacturer's technical data for each component and item of equipment specified, including equipment dimensions and construction, configurations, color selection charts, attachment and anchorage details, equipment capacities, physical dimensions, construction details, utility and service requirements and locations, point loads, seismic bracing, and factory finishes.

1. Manufacturer's Installation Instructions; Indicate special installation requirements.

2. Seismic Restraints: The contractor shall install the items specified to resist seismic loading as required by the local governing codes. Provide all seismic details with submittals. Install all anchorage devices, including special legs and or braces, required for seismic restraint of items to satisfy applicable governing code requirements for seismic anchorage of equipment. Submit detailed seismic anchorage and attachment drawings and calculations provided by a licensed structural engineer complying with Code requirements and regulations for seismic restraint.

3. Instruction: Submit for review and approval written approval instructions in booklet form providing additional details on safe operation and maintenance.

C. Samples: Submit samples of specified finishes. Samples will be reviewed by Architect for color, texture, and pattern only. Compliance with other specified requirements is exclusive responsibility of Contractor.

D. Submit full-size samples of units and accessories when requested by Architect.

E. Submit samples of electrical fixtures when required by Architect, complete with fittings and accessories with specified finish.

1. Acceptable sample units will be used for comparison inspections at project. Unless otherwise directed, acceptable sample units may be incorporated in work. Notify Architect of their exact locations. If not incorporated in work, retain acceptable sample units in building until completion of work and remove sample units from premises when directed by Architect

F. Coordination Drawings: As part of the shop drawing submittal prepare drawings coordinating the photographic equipment with all adjacent or related equipment. Coordinate with all related trades prior to submitting coordination drawings.

1.3 OPERATION AND MAINTENANCE DATA

A. Submit information in one electronically prepared, type written, PDF format, email ready package.

B. Operation Data: Include description of required operation, adjusting and testing.

C. Maintenance Data: Identify system maintenance requirements, servicing cycles and spare part sources.

1.4 QUALITY ASSURANCE

A. Single source responsibility: Provide items required by this section manufactured or furnished by same company for single responsibility. Photo equipment manufacturer must have at least (10) year's experience in the fabrication and installation of similar projects and demonstrate the financial stability necessary to stand behind the product and the quality of their installation.

B. Manufacturer's qualifications: Modern plant with proper tools, dies, fixtures and skilled workmen to produced high quality equipment. Installers shall be factory certified by the manufacturers.

C. Coordination: The supplier/installer shall coordinate the installation of all products under this section.

D. Installer's qualifications: Shall be factory certified by the manufacturer.

E. The use of catalog numbers, and specific requirements set forth in drawings and specifications, are not intended to preclude the use of any other acceptable manufacturer's product or procedures which may be equivalent, but are given for purpose of establishing standard of design and quality for materials, construction and workmanship.

F. Financial Stability: Provide evidence that photographic contractor is in good standing financially with its manufacturers and suppliers, fully bondable, and reliable so as to be able to guarantee and be fully accountable for the quality of its work on this project.

1.5 DELIVERY, STORAGE AND HANDLING

A. All products shall be delivered to the job site in manufacturer's original unopened containers, crates or protective wrappings with the manufacturer's name and address clearly labeled thereon.

B. Accept products on site and inspect on arrival for damage.

C. Protect products from damage and soiling at all times. Keep products covered with polyethylene film or other suitable protective coverings.

D. Deliver, store, protect and handle products on the site in such a manner as to minimize the risk of damage, decay, deterioration, corrosion, and/or loss from theft.

1.6 PROJECT CONDITIONS

A. Do not deliver or install photographic equipment until building is secure and weather tight, all painting is completed and ceilings, overhead ductwork and lighting are installed.

1.7 FIELD MEASUREMENTS

A. Verify field measurements shown on shop drawings or as instructed by manufacturer.

1.8 WARRANTY

A. All fixtures shall be warranted for a period of **TWO YEARS** from the date of substantial completion verified in letterform by the Architect.

1.9 SPARES

A. Provide the following spare parts delivered to the owner in unopened boxes:

1. Four change spare lamps and ballast for each size of light fixture

PART 2 - PRODUCTS

2.1 ACCEPTABLE MANUFACTURERS

A. Manufacturers offering products to comply with photographic equipment requirements include but are not limited to the following:

1. Darkroom USA, Inc., Ph. (631) 821.5948, www.darkroomsinc.com
2. B & H Photo Video, Ph. (800) 606.6969, www.bhphotovideo.com
3. Adorama, Ph. (800) 805.4600, www.adorama.com

2.2 EQUIPMENT

Overhead Studio Rail & Lighting System: (**Equipment Number LE3**): Manfrotto Pro Studio Rail System 33 Kit - Includes: 2 Fixed and 2 Mobile Rails at 9'-10" Each, Brackets, Carriages, Spigots, End Stops, 2 Telescopic Poles, 1 Pantograph - Supports 3 Lights; or approved equal approved prior to general contractor bid submission.

A. General: Shall be a ceiling mounted, overhead lighting system designed to support digital cameras and various light fixtures to allow easy manipulation of studio lights and cameras by suspending them from a ceiling mounted rail system. Systems shall be used for conventional film-based as well as digital, instant capture photography applications. System shall be designed around fixed ceiling mounted rails. From these fixed rails hang transverse rails running crosswise, and on which the lights and camera attachments are suspended using a “light-lift” system. The transverse rails shall be able to move back and forth and diagonally. System rails are aluminum construction. Product shall be manufactured by a company with at least five years experience in the design and production of studio lighting system products.

B. Overhead Studio Rail & Lighting System shall have the following features. Transverse rail shall move freely on an X-Y axis to cover a working space as noted on plans. Rails shall be slim profile for low ceiling applications, 9’10” long and be supported with ceiling mounts at a minimum interval of one mount every 2 feet. Each transverse rail shall be supported by two eight-wheel, braked carriage units. Each transverse rail shall support counter-balanced pantographs which shall move freely along the length of the rail via a four-wheel, braked carriage.

1. Controls: Provide wireless control unit eliminating any cabling between the camera and the lighting systems

2. Electrical: 120 VAC, 20 Amps. Four duplex receptacles will be installed on the ceiling at each corner of the photo system providing power. These receptacles will be switched so as to allow easy on/off control of photo lamps.

3. Provide cable carriers, rail fixings, brakes, carriages, clamps, supports, adaptors, metal plate blocking, end stops and other accessories in quantities as required for complete and functional installations.

4. Interfacing Steel: The manufacturer shall provide all interfacing steel for the proper support and anchorage of the track systems to the building structure above. Provide as part of shop drawings a coordination drawing showing all required blocking and interfacing steel, concealed in ceiling and walls, for the support and anchorage of all studio lighting systems and related components.

5. Entire system shall be BLACK.

6. Light units shall be as scheduled:

   a. (1) Dyna-lite MK8-2302 Roadmax 800W/s 2 Pack 3 Head Portable Kit for the project. Provide to the general contractor for safe-keeping and transmission to the Owner.

   b. **SEM – 211A, PHOTO 3 – 212C, TRACE 3 – 213A**
   with room ceilings at 10'-6" AFF.

      1. (1) Manfrotto Pro Studio Rail System 33 Kit: with 2 fixed 9-10" long ceiling mounted rails spaced 7' apart and 2 mobile 9'-10" transvers rails. Complete kit includes brackets, carriages, spigots, end stops, 2 telescopic poles, 1 pantograph

      2. (3) Lite Lift Pantograph with Short Drop. Complete kits including 5/8" spigot, carriage, spring and safety cable. Model No. FF3512N86

      3. (1) Fluorescent Light Bank, 220W Dimmable, Model No. FLO-220

      4. (1) Universal Camera Mount. Model 155RC

      5. (2) Flash/Modeling Studio Monolight. Model No. PLR1000DRC

      6. (2) Universal Mounting Yoke. Model No. AD91Y

      7. (1) LPA Pocket Wizard Plus III Transceiver: radio transmitter trigger and receiver with cabling system. Model Plus III

7. USB Port

C. Digital Camera:

PART 3 – EXECUTION

3.1 EXAMINATION

A. Verify equipment rough in before proceeding with the work in this section.

B. Coordinate with other trades for the proper and correct installation of plumbing and electrical rough-in, structural backing for items attached to walls and ceilings, and for rough opening dimensions required for the installation of products in this section.

C. Examine the areas and conditions where photo laboratory equipment is to be installed and notify the Architect of conditions detrimental to the proper and timely completion of the work. Do not proceed with the work until unsatisfactory conditions are corrected to permit proper installation of the work.

3.2 INSTALLATION

A. Install in accordance with manufacturer's instructions.

B. Install in accordance with standards required by authority having jurisdiction.

C. Anchor equipment securely in place.

D. Sequence installation to ensure utility connections are achieved in an orderly and expeditious manner.

E. Touch-up minor damaged surfaces caused during installation. Replace damaged components as directed by Architect.

F. Equipment in this section shall be installed by the equipment subcontractor with all necessary fittings mounted for final connection by Divisions 23 and 26.

G. Fixtures and accessories supplied and/or installed as a portion of this work shall be installed in a precise manner in accordance with manufacturer's directions. Where connections are required to electrical lines, the manufacturer is to provide items required for connection and coordinate the final installation made by the other Contractors.

3.3 INSTALLATION OF OVERHEAD STUDIO RAIL & LIGHTING SYSTEMS

A. Field Jointing: Where practical installer shall use continuous rails. Where field joints are used, the main rails shall be supported by a ceiling mount within 10” of the joint.

B. Fastenings: Main rails shall be supported by ceiling mounts at a minimum interval of one mount every 2 feet and a ceiling mount within 10” of any field joints.

C. Workmanship: Install the rail systems perfectly level, straight and true. Distorted rails will be rejected. All rail-ends shall be terminated with end caps and stops. All cabling shall be supported by adequate cable trolleys to prevent excessive cable-sag. System shall be installed so as to eliminate the striking or scraping of rail-ends on adjacent walls and/or casework and equipment. Background system shall be anchored to structure within wall and each end shall be supported by a minimum if two structural members.

3.4 CLEANING, ADJUSTING & PROTECTION

A. Repair or remove and replace defective work as directed upon completion of installation.

B. Clean shop finished surfaces, touch-up required, and remove or refinish damaged or soiled areas, as acceptable to Architect.

C. Protection: Advise Contractor of procedures and precautions of protection of materials and installed laboratory furniture form damage by work of other trades.

D. Adjust operating equipment to efficient operation for its intended use and as required by the manufacturer.

3.5 WARRANTY

A. Studio Lighting System Warranty: Contractor warrants to the Owner that the product is free from defects in material or workmanship for two year under normal use and service with the exclusion of lamps, flash tubes, and other consumable components. Warranty shall become effective from the date of substantial completion and shall be in force for two years from that date.

3.6 DEMONSTRATION

A. Provide systems training and demonstration of all equipment operations and functions, for a duration of at least 8 hours.

B. Refer to Commissioning Specification Section for training requirements for specific systems and equipment. Training of the Owner’s operation and maintenance personnel is required in cooperation with the Commissioning Consultant. A training agenda shall be prepared by the Contractor and approved by the Owner prior to training performance.

END OF SECTION 11 47 00

This page intentionally left blank.

SECTION 11 49 00

FIRING RANGE EQUIPMENT

PART 1 - GENERAL

1.1 DESCRIPTION:

A. Furnish and install all firing range equipment, materials, systems and assemblies as shown and specified.

B. Equipment items specified in this section include the following **Equipment* or ***K**ey **N**ote*

1.	Bullet Trap	**FA6**
2.	Ballistic Baffle System (Safety Ceiling and Deflectors)	**FA3/FA4**
3.	Monorail Turning Target Conveying System (Electronic System)	**FA7**
4.	Projectile Recovery Tank (PRT) – Relocation of Existing	**FA8**
5.	Ballistic Rubber Panels	**FA5**
6.	Range / PRT Signage	**KN68 /KN69**
7.	Adjustable Tool Rack	**KN58**

C. Refer to Divisions 22, 23 and 26 and the mechanical and electrical drawings for related plumbing, mechanical and electrical work.

1.2 RELATED DOCUMENTS: The completion of the work described in this Section may require work in or coordination with other Sections of these specifications. The Contractor and the subcontractor will be responsible for identifying and including all related work in other Sections of these specifications and/or drawings necessary for a complete installation of the work described in this Section. These related sections include, but are not limited to the following:

A. Drawings and general provisions of the Contract, including General and Supplementary Conditions and Division 1 Specification Sections, apply to this Section.

B. Refer to Divisions 22, 23 and 26 and the mechanical and electrical drawings for related plumbing, mechanical and electrical work.

C. System commissioning is a part of the construction process. Documentation and testing of systems, as well as training of the Owner's operation and maintenance personnel, is required in cooperation with the Commissioning Consultant. Substantial Completion is dependent on successful completion of all commissioning procedures, documentation, and issue closure. Refer to Commissioning Specification for detailed commissioning requirements.

1.3 SUBMITTALS

A. Submit under the provisions of the general project specifications.

B. Design Data: Submit drawings, specifications and other design data as necessary to show the complete and coordinated design of the firing range's safety baffles and deflectors, bullet recovery tank, bullet trap and target holder and retrieval trolley. The range equipment manufacturer shall provide design drawings showing anchorage of equipment to resist seismic loading as required by local governing codes. Provide all seismic anchorage details, stamped and signed by a structural engineer licensed in the State of the project. Also indicate required wall or floor construction requirements and point loads.

C. Shop Drawings: Indicate equipment locations, large scale plans, elevations, cross sections, details, duct locations, rough-in and anchor placement dimensions and tolerances and clearances required.

D. Product Data: Provide manufacturer's technical data, including equipment dimensions and construction, equipment capacities, physical dimensions, utility and service requirements and locations, point loads and factory finishes.

E. Manufacturer's Installation Instructions: Indicate special installation requirements.

F. Coordination drawings: (Applies to all range equipment) The General Contractor shall provide fully coordinated shop drawing(s) of all range equipment showing locations of all range equipment and associated light fixtures, sprinkler heads, electrical fixtures, HVAC components, etc. Coordination drawings shall address seismic restraint requirements.

G. Final design and layout of range equipment, including selection of mounting options, seismic restraint and coordination with interfacing building systems, shall be the complete responsibility of the range equipment manufacturers as a subcontractor of the General Contractor.

H. Provide design and calculations for the support and anchorage for ballistic baffles, and bullet trap, by a licensed structural engineer licensed in state of project.

1.4 OPERATION AND MAINTENANCE DATA

A. Submit information in bound manual form, typewritten or computer word-processed on 8-1/2" x 11" paper.

B. Operation Data: Include description of equipment operation, adjusting and testing required.

C. Maintenance Data: Identify system maintenance requirements, servicing cycles and spare part sources. For bullet trap provide documents describing specific maintenance procedures to be employed, based on the type of ammunition used and the number of rounds fired. Provide signage as required by this specification in part 2.

1.5 QUALIFICATIONS

A. Manufacturer: Company specializing in manufacturing the Products specified in this section with minimum three years documented experience.

1.6 DELIVERY, STORAGE, AND HANDLING

A. Deliver, store, protect and handle products on the job site in such a manner as to minimize the risk of damage, decay, deterioration or loss from theft.

B. All products shall be delivered to the job site in manufacturer's original unopened containers, crates or protective wrappings with the manufacturer's name and address clearly labeled thereon.

C. Accept products on site and inspect on arrival for damage.

1.7 FIELD MEASUREMENTS

A. Verify that field measurements are as indicated on shop drawings or as instructed by the manufacturer.

1.8 WARRANTY

A. The range equipment manufacturers shall provide a warranty under provisions of the general project specifications for a period of 5 years from the date of occupancy by the Owner.

1.9 QUALITY ASSURANCE

A. The manufacturer of the firing range equipment shall design and locate the necessary safety baffle and deflector systems throughout the firing range and coordinate them with other range equipment. Comply with manufacturers recommendations for installation of all products. Manufacturers shall design all range equipment items to comply with seismic restraint requirements of governing codes.

B. Installation: Installation of the equipment specified under this section shall be undertaken by the manufacturer’s crew of installers, or a crew of installers who are approved in writing by the manufacturer. In either case, the installation of equipment specified under this section shall remain the complete responsibility of the manufacturer as a subcontractor to the General Contractor. Following installation of equipment, all equipment installations shall be inspected by the manufacturer’s quality control officer to certify that all quality control standards are met. The quality control officer shall also instruct the Owner of all short and long term maintenance requirements for the range equipment.

C. All electrical work shall comply with latest edition of the National Electrical Code.

D. Ratings of manufactured materials shall meet Standard for Safety UL752.

E. The design of the range equipment and ventilation shall comply with all OSHA requirements.

PART 2- PRODUCTS

2.1 ACCEPTABLE PRODUCTS

A. Subject to compliance with these specifications, acceptable products include, but are not limited to, those items indicated in Section 2.2, under each individual product. Products by other manufacturers submitted as equals will be reviewed for conformance with the specifications.

2.2 MATERIAL

A. Bullet Trap (Equipment Number **FA6**); Chunk Rubber Trap with Class A fire rated rubber media as manufactured by Paragon Tactical, Inc. (PTI): 1580 Commerce Street Corona, CA 92880, 800.482.6994, Contact Name: Art Fransen, www.paragontactical.com, or equal products pre-approved in writing prior to bidding.

1. Ballistic Rating: Bullet trap shall be designed to withstand the following ballistic level:
   a. Ballistics capacity: The granular rubber media, steel backstop and support base shall capture bullets fired from all conventional shotguns, handguns, pistols, and rifles up to Weatherby magnum rifle. 460 caliber (8,100 ft. lbs. energy at muzzle). Backstop shall be able to accept up to .460 without damage to any part of the backstop system. The backstop will allow the shooting of 50 BMG rounds only from a distance of 25 yards.

2. A 3/8” steel plate Treated AR-500 Hopper/ Baffle at the terminus of the range shall be hung from the backstop infrastructure frame system over the media to deflect rounds shot over the media down into the media and protect the rear wall of the backstop range. This Hopper/Baffle shall have an approximate 18 inch throat from the bottom of the Hopper/Baffle to the vertical back pan of the infrastructure. The overhead steel deflector/hopper will contain rubber media that can continuously fill the area between the top of the inclined rubber media and the deflector/hopper.

   a. The entire infrastructure shall be 10 gauge galvanized steel with no painted surfaces other than the systems treated 3/8s AR steel Hopper/Baffle. The infrastructure shall be assembled without welding and be free standing. The infrastructures galvanized steel plates, used to support the rubber media, shall be flat and angled upwards on a continuous flat plane from the floor to the rear of the infrastructure at approximately 32 degrees.

b. The fire resistive granular rubber media shall be placed over the infrastructure to a depth of two feet measured perpendicular to the face of the sloping rubber toward the support structure of the trap and be treated with dry chemical products to immobilize potential lead hazards to levels below the Environmental Protections Agency (EPA) threshold of 3 parts per million (3ppm) as measured by the EPS's 1311 TCLP test, from lead bullets fired into the trap. The trap shall be capable of being mined solely from the front of the backstop system. This media shall be pure (SBR) rubber approximately one (1) inch in size and be 99.99% free of contaminants such as fiber and contain no steel. The range backstop rubber media shall be covered with a 60-mil affixed retainer sheet to prevent the rubber chunks from scattering on projector impact. Provide 3 retainer sheets as attic stock in addition to the initial installation.

c. The granular rubber assembly shall contain fire tested polymer materials meeting the criteria outlined in Section 2.2.a.2.e (below), containing phosphate-aluminum-based additives that passivate lead surfaces by forming an insoluble lead aluminum phosphate coating. This trap shall also contain materials such as hydrated polymers and non-hazardous chemical materials capable of preventing the loss of lead into the surrounding environment and or contacting liquids. These materials shall be of such composition that a mixture of powdered lead and such dry material containing 1% by weight of powdered lead. (one part by weight powdered (<200 mesh) pure lead to 99 parts powdered lead-immobilizer) shall not leach lead in excess of 3ppm when tested using the U.S. Environmental Protection Agency Toxic Characteristics Leaching Procedure (EPA Method 1311). This application shall in essence neutralize lead contamination in the trap. Proof of such results must be provided to the Owner by the Trap Manufacturer of such environmental capabilities based on EPA methodologies including the standard lead TCLP test for measuring HAZMAT lead contamination and verified by an independent, third party lab.

d. Bullet Trap/ Range Sign: General Contractor shall provide signage supplied by the bullet trap manufacturer, which shall provide a metal sign displaying the maximum ballistic levels (i.e. weapon sizes with corresponding muzzle velocities, bullet size and energy) permitted for use with this equipment. Size of sign shall be 14"H x 20" W. Sign material shall be painted steel. Anchor to wall with 4 anchors. Locations shall be noted as **Key Note 68**. In addition to the above signed information, include the following text:

    i. Use of Firearms Range is Limited to Authorized Personnel Only.
    ii. Approved Hearing Protection Must be Worn at All Times.
    iii. Approved Eye Protection Must be Worn at All Times.
    iv. Eating and Drinking are Prohibited in the Firearms Range.

e. Fire Resistive Rating: Bullet trap shall deliver the following fire resistive level:

i. Granular rubber assembly (granular rubber combined with fire resistive admixtures) proving the granular rubber assembly will not ignite and/or combust when exposed to tracer rounds, and will not combust when exposed to direct flame, regardless of any laws, ordinances or rules which may limit or prohibit the use of tracer rounds.

B. Ballistic Baffle System (Safety Ceiling and Deflectors): (Equipment number **FA3/FA4)**: Manufactured by Range Systems, Inc., 1.888.999.1217, www.range-systems.com, Contact: Brandon Bernstein, or equal system, approved prior to bid submission.

1. Combination wood and steel plate baffles designed to safely stop and capture bullets from misdirected shots or other projectiles. The baffle panels shall be constructed of a sandwiched panel consisting of steel layer at top, a continuous 1.5” air space and plywood/rubber acoustic panels at underside, suspended horizontally (for the safety ceiling) and at required angles (for the baffles). At the bullet trap provide rubber acoustic clad re-directive guard baffle. Provide all accessories for a complete ballistic baffle system installation weighing approximately 37.5+/- pounds per square foot normally in 4’ x 4’ square panels with four anchor points per panel. The exact weight will depend on the manufacturer and the final weight shall be verified by the structural engineer in the submittal / shop drawing review process. Entire ballistic baffle system shall be seismically anchored to comply with local governing codes. Fully coordinate the safety baffle and deflector system with the bullet trap and all other firing range equipment.

2. Materials and assembly shall be designed to withstand projectile forces equal to or in excess of those to which the bullet trap will be subjected. Plywood panels with rubber acoustical finish shall be provided and installed by the ballistic baffle manufacturer. Bottom side of plywood panels shall be covered with fire retardant rubber Dura-Panel EXP system.

3. The rubber acoustic panels shall be glued to plywood panels and anchored with fasteners as recommended by the manufacturer. Acoustical material shall have the following flammability characteristics: ASTM E84 Class 1, Flame spread - 25, Smoke density - 450. Sand all exposed edges of plywood and apply paint (matching panel color) to edges of plywood. Ballistic baffle manufacturer shall furnish and install the rubber acoustical panels. Safety baffles and deflectors shall be designed and installed to protect light fixtures, electrical outlets, sprinkler heads and other protrusions, which may be present throughout the firing range, whether protruding from the ceiling or walls.

4. The locations of light fixtures, hose bibs, power outlets, sprinkler heads and other protrusions shall be coordinated with the approved shop drawings of the safety baffle system and fully concealed by ballistic baffle system.

5. Fully coordinate the ballistic baffle system layout with the bullet trap, other range equipment and all associated building features such as HVAC grilles, lights, sprinklers, etc.

6. Ballistic Rating: Materials and assembly shall be designed to withstand projectile forces equal to or in excess of those to which the bullet trap will be subjected.

C. Electronic Monorail Turning Target Conveying System (Equipment Number **FA7)**: Manufactured by Savage Range Systems, 1.800.370.0712, www.savagerangesystems.com, or equal system approved prior to bid submission.

1. Model: KMA 2000 Overhead Target Retrieval System

a. The system shall be seismically anchored to comply with all local governing codes.

b. The Target Conveying System shall consist of a monorail track, suspension system supports, upper target carrier body, lower carrier target holder assembly, drive unit drive cable, take-up assembly, and an electronic control module. The system will have the capability of stopping at any 1' increments (±1%) down range with allowable coast.

c. All leading edges exposed to projectile impact shall be fitted with AR500 angled steel surfaces such that any misdirected projectile will be deflected down range. Materials and assembly shall be designed to withstand projectile forces equal to or in excess of those to which the bullet trap will be subjected.

d. Track length is determined by length of forensic range.

D. Projectile Recovery Tank (PRT) (Equipment Number **FA8**): Model # BRS101-48A by TEAM Fabrication Inc., West Falls, New York, Contact: Neal Hopkins, Ph. (716) 539-1914, www.bulletrecovery.com or equal products pre-approved in writing prior to bid submission.

1. General: The bullet recovery tank shall consist of a one piece water-filled containment tank assembly, firing port, exhaust duct, casing catcher and a circulating, water-filtering system.

2. Ballistics capacity: Shall be designed to withstand the following:

a. Commercially loaded handgun or rifle ammunition, including armor-piercing ammunition, having a muzzle velocity not to exceed the following: 3,500 FPS with a corresponding energy of 5,250 foot-pounds.

3. Design & Material: The tank shall be designed to provide a rapid, safe and reliable means of recovering fired bullets free of surface damage for use in

forensic examination. The tank design shall utilize 1/4” thick, type 304 stainless steel for the construction of the back, front and firing end, and 3/8” type 304 stainless steel for the construction of the tank bottom and projectile receiving end. All exterior welds shall be ground and polished to a #3 finish.

4. The overall assembled tank dimensions (outside dimensions), including the reinforcement/ companion angles shall be: 34-1/2” (87.63cm) wide by 107-5/8” (273.368cm) long by 48-3/8” (148.273 cm) tall. The inside dimensions of the assembled tank shall be 28” (71.12cm) wide by 101” (256.54cm) long by 48” (147.32cm) tall. Tank weight empty is approximately 2,000 pounds; tank weight full of water is approx. 6000 pounds; tank capacity is approximately 400 gallons of water.

5. Located at the operator’s end of the tank shall be a 6.35mm thick by 6” (15.24cm) diameter firing port. The firing port will help to maintain a 22 degree angle when the test weapon is properly aimed. The firing port shall utilize a notched HDPE barrel rest for the firing of test weapons.

6. There shall be a slightly sloping bottom plate and removable HDPE mat located in the tank. This sloped bottom plate, coupled with the tank’s water current, will insure that the test fired and spent projectile will roll towards the front of the unit and onto the mat for easy detection and retrieval. Retrieval of projectiles is to be accomplished with two assemblies provided with the tank; one through the use of an underwater, vacuum operated, bullet retrieval unit, and the second through the use of a mastic covered wand.

7. The tank shall rest on a series of air shock isolation pads of appropriate size and strength.

8. Exhaust: The tank shall be connected to the building’s lab exhaust system, for the rapid forced evacuation of all gunshot residues resulting from the use of the tank. (A tank employing a recirculating air system is not acceptable.) Tank exhaust system shall maintain a negative pressure inside the tank at all times, pulling air through the firing port. Located on the top and back of the unit shall be a transition fitting to accommodate the exhaust ductwork. The tank exhaust shall be extended to a remotely located pre filter and HEPA filter provided under Division 23, exhausting to the exterior. Coordinate work with general contractor and mechanical contractor. The tank manufacturer shall provide a stainless steel transition fitting at top of the tank and a 16-gauge stainless steel duct from top of tank extending 12” above top of concrete ceiling slab. Connection to the Division 23 exhaust system shall be by the HVAC contractor.

    a. A 16 gauge stainless steel, 8” diameter exhaust duct extending 12” above the concrete ceiling deck shall be provided.
    b. Connection to the exhaust ductwork, the exhaust fan and HEPA filter shall be by others. Exhaust rate: 500 cfm of exhaust at the transition fitting located on top of the unit.

9. A light fixture shall be provided at the operator's end of the tank. The light shall be capable of withstanding the shock of bullets being fired into the tank. Bulb replacement shall be made at the light housing from outside of the tank.

10. There shall be a hinged and gasketed access door located on the top of the unit. The door, bracing and doorframe shall be fabricated using 11 gauge type 304 stainless steel. The door shall be hinged at the top/back of the tank.

    a. The door shall be raised and lowered via two electric power linear actuators. The switch shall be located at the operator's end of the tank.
    b. The actuators shall be able to be disengaged from the door, to provide manual access to the tank's interior.

11. The interior plumbing of the tank shall consist of a water-add stand pipe, a drain, a skimmer, and a filtered water distribution.

    a. The water-add stand pipe is located at top and back of the unit and will discharge supply water to the tank. The operator, by opening and closing a manual ball valve supplied with the tank, maintains water level.
    b. A drain is to be located at the bottom and target end of the tank. The drain is covered with a removable mesh screen.
    c. The water distribution pipe runs the length of the tank and discharges filtered water back into the tank in such a manner as to direct the spent projectile towards the front of the tank.
    d. A vacuum, wand and basket are provided for general housekeeping and for fragmented projectile retrieval. The wand and hose remain in the tank and are supported in such a manner as not to interfere with the normal operation of the tank.
    e. The skimmer is located at water level on the back and target end of the tank.

12. The exterior plumbing of the tank shall include a strainer, filter and pump package. This pump package will be pre-plumbed to include a recirculating loop which will permit back flushing of the unit, active emptying of the tank to a floor drain or floor sink and the passive emptying of the tank to a floor drain or floor sink via gravity. Flow and cut-off valves shall be provided and installed in the plumbing loop to accomplish these requirements.

    a. A 20 micron (nominal) cartridge filter shall be utilized for system filtration.
    b. The pump and filtration system shall be interfaced with a 24 hour timer control system.
    c. All exterior plumbing and fittings which are supplied with the tank system shall be 304/316 stainless steel approved sanitary fittings and connections.

13. Electrical Requirements:

    a. Tank requires a 125v, 30 Amp receptacle wired to a GFI (ground fault interrupter) circuit breaker dedicated for use on the Bullet Recovery System.

b. The unit's light, door, and pump shall all be inter-wired to a common controls enclosure located at the exterior, target end of the tank and shall be GFI protected. There shall be four switches provided and located at the operator's end of the tank to enable/disable the pump and light as well as to open or close the tank access door. All tank electrical components shall be UL-approved.
c. The switches should be located at the operator's end of the tank. The switch installations shall be by the tank manufacturer.
d. No exposed wiring or electrical work is permitted.
e. Electrical Controls: All electrical controls and switches for the pump, filter, tank lighting, etc. shall be waterproof and watertight UL approved components.
f. Provide a single power lead from controls panel that plugs into a wall receptacle on GFI circuit breaker.
g. Automatic pump cutout to eliminate the pump from ever running dry.

14. Provide the following special features:

a. Brass Casing Catcher:
1) "*Casing Catcher*" is a device used to trap spent and ejected projectile casings from test weapons fired into the Bullet Recovery Tank, thus preventing damage and/or loss.
a) The "Casing Catcher" utilizes an expandable/collapsible, reinforced close cell nylon material stock formed to a cylindrical shape. This "sock" is approximately 18 inches in diameter and has a closed end that fits snug over the tank's projectile entry port via an elastic band. The operator's end of the "sock" is partially closed to prevent casings from rolling out, however, ample space is provided for aiming and for weapons requiring forearm support.
b) The sock is supported by an expandable aluminum frame that attaches to the stanchions, located on the Bullet Recovery Tank, via quick-connects. The frame and sock expands to 36 inches from the tank's sight/barrel rest.
c) The unit folds into a neat package that can be easily stored when not in use.

15. Closure panels: Provide removable floor closure panels, including necessary support systems, around the tank perimeter. The closure panels shall completely close the gap between the tank and floor to prevent the possibility of a casing or other object from rolling under the tank.

16. Install tank level. Provide the necessary shims, anchors and vibration isolation pad.

17. Projectile Recovery Tank (PRT) Sign: Supplied by the PRT manufacturer, provide a metal sign displaying the maximum ballistic levels (i.e. weapon sizes with corresponding muzzle velocities, bullet size and energy) permitted for use with this equipment. Size of sign shall be 14"H x 20" W. Sign material shall be

painted steel. Anchor to wall with 4 anchors. Locations shall be noted as **Key Note 69**. In addition to the above signed information include the following text:

a. Use of Projectile Recovery Tank is Limited to Authorized Personnel Only
b. Approved Hearing Protection Must be Worn at All Times
c. Approved Eye Protection Must be Worn at All Times
d. Eating and Drinking are Prohibited in the Projectile Recovery Lab

E. Ballistic Rubber Panels: (Equipment number **FA5)**: Manufactured by Range Systems, Inc., 1.888.999.1217, www.range-systems.com, Contact: Brandon Bernstein, or equal system, including matching shallow depth of trap, approved prior to bid submission.

1. Ballistic Rubber Panel Design: Dura-Panel™ EXP

2. Provide 2” thick, 2’ x 2’ fire retardant ballistic rubber tiles designed for ballistic protection, where noted in the projectile recovery tank alcove and firing range. At the projectile tank install wall mounted tiles from floor to concrete ceiling deck and from wall to wall. At the firing range the panels shall be applied to the underside of the ballistic baffles systems.

3. Color: Black coated Light Grey

4. Wall mounted panels: Smooth face non-ribbed Dura-Panels

5. Safety Ceiling mounted panels: Acoustic face ribbed Dura-Panels installed checkerboard style.

6. Sloped Deflector mounted panels: Acoustic face ribbed Dura-Panels installed with ALL RIBS aligned parallel to the projectile travelling down the range.

7. Composition: 94% recycled solid rubber, with fire retardant FA88 on all sides and all edges of each rubber panel, color to be tinted to shade selected by Architect.

F. Adjustable Tool Rack System: (**KN 58**): Provide MegaPeg vertical adjustable Tool rack storage system manufactured by Modern Metal Products, or equal product prior to bid by approved manufacturers.

1. Tool Board: Provide metal tool board made from 18-gauge steel, powder coated. Holes to be per manufacturer’s standard spacing.

2. Color: White

3. Accessories: At each tool board provide 24 of each of the following steel clips: Straight, 30º bend, 90º bend, circle, spring clip, double spring clip (1/2”), double spring clip (3/4”), double 90º bend, 15º

bend, holder, can holder, pliers holder, metal tray, card holder

4. Size of each tool board: 6’-0” w x 4’-0” h.

5. Location: Room **PRT/SHOP 205C**.

PART 3 - EXECUTION

3.1 EXAMINATION

A. Examine all surfaces, utility rough-ins, embedded anchors, fixtures, and other features of any type that may be present in the firing range prior to installation of range equipment.

B. Inform the Architect of any irregularities or imperfections which may result in the inability to properly and correctly install the equipment under this section, or which may pose safety problems during the operation of the completed firing range.

3.2 COORDINATION

A. Verify equipment rough-in and as-built conditions before proceeding with the work in this section.

B. Coordinate with other trades for the proper and correct installation of plumbing and electrical rough-in, depressions in poured-in-place concrete which will receive firing range equipment, embedded anchors, and for rough opening dimensions required for the installation of products in this section.

C. Coordinate with mechanical installer for the proper and correct location of exhaust systems for the bullet recovery tank (both the hard ducted exhaust connection and overhead canopy exhaust).

D. Coordinate with the installer of acoustical systems and finishes to ensure that all materials and assemblies are installed in their proper sequence, and to ensure that the finished installation of all materials and assemblies shall be completed without sacrificing any safety features whatsoever.

3.3 INSTALLATION

A. The manufacturer’s crew of installers shall perform all installation in accordance with the manufacturer’s instructions and requirements.

B. Install in accordance with standards required by authority having jurisdiction.

C. Anchor equipment securely in place.

D. Sequence installation to ensure utility connections are achieved in an orderly and expeditious manner.

E. Touch-up minor damaged surfaces caused during installation. Replace damaged components as directed by Architect.

F. Manufacturer's supervisory representative shall be on-site to supervise the installation of all equipment under this section and any subsequent work that may be required.

G. Equipment in this section shall be installed by the Firing Range Equipment manufacturer with all necessary fittings mounted for final connection by Divisions 22, 23 and 26.

H. Seismic Restraints: The range equipment manufacturers shall install all range equipment to resist seismic loading as required by the local governing codes. Install all anchorage devices, including special legs and or braces, required for seismic restraint to satisfy all governing code requirements for seismic anchorage of equipment.

3.4 ADJUSTING

A. Adjust operating equipment to efficient operation for its intended use, and as required by the manufacturer.

3.5 DEMONSTRATION & FINAL ACCEPTANCE OF THE WORK

A. Provide systems training and demonstration of all equipment operations, and functions, for a duration of at least 8 hours.

B. Regarding the bullet recovery tank, final acceptance of the equipment installation shall be contingent upon successful demonstration, that the air flow performance of the tank is sufficient to prevent the escape of any gunshot residue from the tank interior, to the satisfaction of the Owner and architect. Similarly, final acceptance of the work is contingent upon the installation being completely leak free.

C. Refer to Commissioning Specification for training requirements for specific systems and equipment. Training of the Owner's operation and maintenance personnel is required in cooperation with the Commissioning Consultant. Commissioning Specification lists the specific systems and equipment. A training agenda shall be prepared by the Contractor and approved by the Owner prior to training performance.

END OF SECTION 11 49 00

SECTION 11 53 53

BIOLOGICAL SAFETY CABINETS

PART 1 - GENERAL

1.1 DESCRIPTION:

A. Furnish and install all biological safety cabinets as shown on drawings and specified.

B. Equipment items specified in this section include the following:

	*Equipment or **Key Note**
1. Biological Safety Cabinets	**BSC4-4 foot**
2. Biological Safety Cabinets	**BSC6-6 foot**

1.2 RELATED DOCUMENTS:

The completion of the work described in this section may require work in or coordination with other sections of these specifications. The Contractor and the subcontractor will be responsible for identifying and including all related work in other sections of these specifications and/or drawings necessary for a complete installation of the work described in this section. These related sections include, but are not limited to the following:

A. Drawings and general provisions of Contract, including General and Supplementary Conditions apply to this Section.

B. Refer to Divisions 22, 23 and 26 and the mechanical and electrical drawings for related work.

C. Section 12-34-50, Laboratory Casework,

D. System commissioning is a part of the construction process. Documentation and testing of systems, as well as training of the Owner's operation and maintenance personnel, is required in cooperation with the Commissioning Consultant. Substantial Completion is dependent on successful completion of all commissioning procedures, documentation, and issue closure. Refer to Commissioning Specification Section for detailed commissioning requirements.

1.3 REFERENCES

The bench-mounted Class II, Type A2 biosafety cabinets must conform to the following regulations and standards:

A. NSF Standard 49, National Sanitation Foundation Specifications.

B. Directive on the Restriction of the use of certain hazardous substances in electrical and electronic equipment (2002/95/EC) – RoHS Directive.
C. The bench-mounted Class II, Type A2 biosafety cabinet must carry the ETL listed mark for the following:
   a. UL 61010-1 (formerly 3101-1), Underwriters Laboratories Inc., Electrical Equipment for Laboratory Use.
   b. CAN/CSA C22.2 No. 61010-1, Canadian Standards Association, Safety Requirements for Electrical Equipment for Measurement, Control and Laboratory Use.
D. Biosafety Cabinets that are 230 volt models must carry the CE conformity marking as required by the Council of European Communities.
   a. Electrical Safety Standard – IEC 1010-1
   b. Electromagnetic Compatibility Directive – 89/336/EEC
E. Federal Standards FS 209.
F. NFPA 45, Fire protection for laboratories using chemicals
G. ADA
H. SAMA Standard LFB-1976 Metal Laboratory Furniture
I. ASTM E-84-98, Surface-burning characteristics of building materials.
J. ANSI/AIHA Z9.5-1992, Laboratory ventilation
K. OSHA 29CFR 1910.1000, Fume hood face velocity

1.4 SUBMITTALS

A. Submit under provisions of Division 1, Basic Requirements. In addition to Division 1 requirements, include one PDF format electronic submittal delivered via email.

B. Product Data: Provide manufacturer's technical data, including materials and construction, equipment capacities, physical dimensions, utility and service requirements and locations, point loads and factory finishes.

C. Manufacturer's Installation Instructions: Indicate special installation requirements.

D. Seismic Restraints: The biological safety cabinet manufacturer/installer shall design and install the biological safety cabinets to resist seismic loading as required by the local governing codes. Provide all seismic details with submittals indicating required wall construction such as wall stud size and gauge, point loads, etc. Install all anchorage devices, including special legs and or braces, required for seismic restraint of biological safety cabinets to satisfy all governing code requirements for seismic anchorage of equipment.

1.5 OPERATION AND MAINTENANCE DATA

A. Submit information in bound manual form, typewritten or word processed on 8-1/2" x 11" paper.

B. Operation Data: Include description of equipment operation, adjusting and testing required.

C. Maintenance Data: Identify system maintenance requirements, servicing cycles and spare part sources.

1.6 QUALITY ASSURANCE

A. Single source responsibility: All systems and components which comprise the biological safety cabinets shall be provided as a single biological safety cabinet unit, designed, fabricated and assembled by a single manufacturer.

B. Manufacturer's qualifications: Modern plant with proper tools, dies, fixtures and skilled workmen to produced high quality biological safety cabinet. Installers shall be factory certified by the manufacturer.

C. Coordination: The supplier/installer shall coordinate the installation of all products under this section and shall coordinate the installation and rough-in locations for utilities required for biological safety cabinet operation.

D. Owner has the right to inspect products at the manufacturer's factory prior to shipment. Products found not to be in conformance with requirements of the contract documents may be rejected.

1.7 DELIVERY, STORAGE AND HANDLING

A. Deliver, store, protect and handle products on the site in such a manner as to minimize the risk of damage, decay, deterioration or loss from theft.

B. All products shall be delivered to the job site in manufacturer's original unopened containers, crates or protective wrappings with the manufacturer's name and address clearly labeled thereon.

C. Accept products on site and inspect on arrival for damage.

1.8 FIELD MEASUREMENTS

A. Verify that field measurements are as indicated on shop drawings or as instructed by the manufacturer.

1.9 WARRANTY

A. Provide warranty under provisions of Division 1.

B. Biological Safety Cabinets shall be warranted to be free from defects in material and workmanship for a period of 36 months from date of substantial completion.

1.10 FIELD CERTIFICATIONS

A. Field certification is required to confirm that an installed biological safety cabinets and associated HVAC work complies with all design and regulatory requirements. Field certification is performed both prior to occupancy and annually thereafter. Field certification prior to occupancy shall be the responsibility of the General Contractor; subsequent annual field certifications after the specified warranty period shall be the responsibility of the building Owner.

B. Perform all field certification work as required by NSF 49 and other federal, state and local requirements. Field certification shall be conducted by qualified personnel regularly engaged in certification of biological safety cabinets with a minimum of 5 years experience in this type of certification. Affix to the biological safety cabinet the certification sticker indicating the date certified, the name of the certifier, certifier's phone number and address as well as the expiration date of certification.

C. Certification field tests shall be performed only after the HVAC system has been completely balanced by the Test and Balance (TaB) subcontractor. Rebalancing, if required by the certifier, shall be the responsibility and performed by the TaB subcontractor

PART 2 - PRODUCTS

2.1 ACCEPTABLE MANUFACTURERS

A. Acceptable manufacturers include, but are not limited to, the following:

1. NUAIRE Plymouth, Minnesota
2. The Baker Company Stanford, Maine
3. Labconco Corporation Kansas City, Missouri.

2.2 GENERAL DESIGN REQUIREMENTS

A. Description
1. Description: Biological Safety Cabinets (BSC's) shall be Class II, Type A2 (vented or unvented) cabinets as scheduled in the Biological Safety Cabinet Schedule. BSC's noted as "vented" are thimble connected to the building ductwork system. BSC's noted as "unvented" discharge HEPA filtered air to the room in which they occupy. All BSC's are to be vented by default if not noted.

2. Manufacturers shall be listed to NSF/ANSI 49:2002 and have the NSF label affixed to the cabinet.

3. All biological safety cabinets shall be listed to UL 61010A-1 UL requirements for laboratory equipment electrical safety, and shall have a UL label affixed to the cabinet.

4. Basis of this specification is the Nuaire Model LabGuard 440 class II, type A2 (vented) with NU-918 thimble biological safety cabinet or approved equal. Specified “unvented” biological safety cabinets have no NU-918 thimble.

B. Factory testing:

1. Each unit, before shipping, shall have a complete test to assure cabinet meets Class II requirements. A copy of this test shall be provided with the unit.

2. For each model type/size supplied, the manufacturer shall provide data on Microbiological Aerosol Challenge equivalent to or more severe than as specified in NSF Standard 49.

3. The manufacturer can be requested to provide the Microbiological Aerosol Challenge (equivalent to or more severe than NSF Standard 49) on serial number of each model to actually be supplied for this project. A representative of the Owner may witness the test.

C. Face velocity: Calculated intake face velocity through the front access opening shall be minimum 100 to 110 fpm with a sash opening of 10”.

D. Factory Certification: Manufacturer shall provide a factory certified copy of the Personnel, Product, and Cross-Contamination (Biological) tests, equivalent to or more severe than as specified in NSF Standard No. 49, performed on one unit from each production run of cabinets for this project. A representative of the Owner may witness tests.

E. Negative pressure design: Units shall be designed such that the entire cabinetwork area shall be totally surrounded by negative pressure areas. All ducts and plenums that may be subjected to biological contamination shall be permanent metal construction and maintained under negative pressure or enclosed with a negative pressure zone relative to outside air.

F. Speed controller testing: All biological safety cabinets shall be capable of automatically handling 50% minimum increase in filter loading and not decrease total air delivery more than 10%. With use of speed controller, a 165%/180% increase shall be attainable. This testing shall be performed in accordance with NSF 49.

G. Interior design: The cabinet interior shall be designed to provide a laminar flow air curtain directly behind the view screen and a lower velocity down flow air over the work area. The high velocity air curtain shall be at least 20% higher than the average down flow over the work area.

H. Monitor and Alarm Systems

1. Unit shall have audible alarm to indicate when slide view screen is in unsafe position.

2. Unit shall have capabilities to monitor mass airflow in the duct system and shall automatically warn a biological safety cabinet user by audio and visual alarm that the mass airflow in the duct has decreased below the calibrated set point. Separate contacts shall be provided that allow audio and visual alarms to be connected to the building's alarm system individually.

3. Provide biological safety cabinets with an exhaust blower interlock with alarm, which interlocks the blower motor of the biological safety cabinet with the building exhaust system control damper. Refer to item 11 under Control System below.

I. Control System: The biosafety cabinet shall contain a self-contained microprocessor module that performs the following functions:

1. Easy interface via touch screen LCD.
2. Control blower via motor solid-state triac.
3. Monitor display and control down flow via dual thermister airflow probe, or pressure transducer.
4. Disable audible alarm switch with ring back function.
5. Clock display (24 hours) and timer function.
6. Control light via solid-state switch.
7. Control outlets via solid-state switch.
8. Complete diagnostic functions.
9. Monitor and display exhaust flow (total flow) via dual thermister airflow probe.
10. Exhaust alarm set points high/low for error conditions (down flow and exhaust flow).
11. Exhaust interlock system that prevents operation of internal supply blower unless the exhaust volume is sufficient to provide the correct air barrier inflow velocity at start up.

J. Special Motor/blower shall be positioned so as to create an even filter loading, thereby prolonging the life of the supply HEPA filter, and shall deliver over 80% of the initial HEPA filter static pressure with no more than a 10% decrease of CFM. Equip each cabinet with a voltage

compensating motor speed controller that automatically compensates for voltage changes to maintain constant voltage to motor. Speed controller will permit manual or automatic adjustment to handle a 165% increase in filter loading and maintain total air delivery at or above 90%.

K. ADA: The bio-safety cabinet shall be ergonomically designed for maximum user comfort and adjustability to meet local and federal accessibility requirements.

L. Special features: provide the special ergonomic features listed below:

1. Adjustable footrest (1)
2. Elbow rest (2)
3. Foam armrest pads (2 sets)
4. Stainless steel turntable (1)

2.3 CONSTRUCTION

A. Cabinet exterior: Cabinets shall be constructed of 16-gauge cold rolled steel. All coated surfaces shall be powder coated to match the color selected for fume hoods specified in Section 12 34 50. Provide decorative side panels to conceal plumbing fixture connections and associated piping.

B. Cabinet interior: Interior sidewalls and rear walls in the work area of the BSC shall be of one piece 16 gage stainless steel construction with formed internal radius stainless steel corners. Interior work area shall be minimum 25-1/2” high. The work area shall be supported by welded horizontal members using no threaded studs or cap nuts below the work surface. Metal air diffuser and filter protector shall be provided in work area.

1. Airfoil: Lower front work area airfoil shall be provided to improve access opening containment capability.

2. Work tray: provide work tray made from 16-gauge stainless steel with 3/16” internal radius stainless steel corners. Work tray shall be removable. Drain pan shall be stainless steel.

C. Panel Construction: Panels shall be fastened together using all stainless steel washers, stainless steel lock washers, and solid stainless steel cap nuts. Stainless steel studs shall be spaced no further than 3-1/2” on centers.

D. Gaskets: When gaskets are used to provide pressure tight seals, gaskets shall seal 100% of the flange area, encircle 100% around studs or other fastening devices used to secure panels, and use mitered joints to seal gasket corners.

E. Filter systems:

1. Provide magnehelic differential pressure gauge to monitor pressure drop across the HEPA filters.

2. Both exhaust and supply HEPA filters and motor blower systems shall be removable and serviceable from the front of the cabinet without entry into the workspace or removal of the view screen.

3. The diffuser below the supply HPEA filter and above the work surface shall be stainless steel.

4. All air plenums shall be screened to prevent entrapment of foreign object in the blower and filter sections.

F. Sliding view screen:

1. Shall be capable of moving from fully closed position to a full open position at least 19 inches high, and shall be capable of moving to a closed position during shut down periods. Working height of sash shall be 10”.

2. View screen shall be 1/4” thick tempered safety glass with stainless steel handles on the bottom of window.

3. Sliding sash-scavenging slots shall be provided to prevent migration of contamination behind the glass view screen.

4. Sliding sash shall be easily raised and lowered.

G. Utilities:

1. Entire unit shall be completely factory pre-wired, UL labeled and supplied by a single 10' power cord.

2. Each unit shall be provided with two GFI 115 volts, single phase, 60 Hz duplex receptacles with drip-proof coves and circuit breakers, mounted on rear wall of the biological safety cabinet. Provide two internal circuits; one for duplex receptacles and the other for blower and lights.

3. Provide one 0.1 Amp form "C" contact on the blower switch to interact with a potential room control package.

4. Cabinet task lighting: Fluorescent tube lamps capable of providing 100 foot-candles of illumination inside the hood cavity.

5. Provide germicidal ultraviolet disinfectant light, four feet in length (nominal), fabricated by the bio-safety cabinet manufacturer for each BSC. Switch mounted on the front of the BSC.

6. Service fittings: As scheduled in bio-safety cabinet schedule

7. Provide each biological safety cabinet with two plugged petcocks for future use, mounted outside of the biological safety cabinet. Provide color-coded washers at hose nozzle outlets with color-coded index handles.

8. Provide needlepoint type valves with self-centering cone tip and seat of hardened stainless steel. Tip and seat shall be removable and replaceable. Valves, fittings and piping shall have pressure rating of 300-psig minimums.

9. Bio-safety cabinets shall be pre-plumbed allowing for a connection for each service to its respective utility. Provide piping for all device fittings from valve to outlet.

10. Drain valve: Provide plugged drain valve opening that can be replaced in future with a drain valve. Provide one loose drain valve for each biosafety cabinet for future use by the Lab.

H. Exhaust Transition Unit: Provide manufacturer's thimble connection to building exhaust system to vented biological safety cabinets. Make final connections to exhaust duct penetrating ceiling utilizing a flanged, bolt and gasket connection. Design thimble exhaust unit to capture 100 percent of test smoke around exhaust connection when smoke stick is held at the junction of the cabinet exhaust and thimble opening. Thimble exhaust unit shall not interfere with performance of the cabinet and room air balance when the exhaust system is either in operational or non-operational mode (i.e. shall not increase the static pressure in the exhaust ductwork when the cabinet is not running). Note: Baker Company standard thimble connections must be modified to meet these criteria or will not be accepted. Exhaust transition unit shall allow for airflow measurement (scanning) above the exhaust HEPA filter.

I. Ceiling Enclosures: Provide chrome closure escutcheon around the entire perimeter of the duct penetrating the ceiling material.

J. Legs: Each BSC not shown over casework shall be equipped with stainless steel, adjustable, telescoping leg assemblies, which shall be capable of adjusting the work surface to variable heights ranging from 30" to 36". Set the work surface elevation to 34" A.F.F. at original installation.

K. Seismic Restraints: The biosafety cabinet manufacturer shall provide with the biosafety cabinets all anchorage devices, including special legs and or braces for seismic restraint of biosafety cabinets to satisfy all governing code requirements for seismic anchorage of equipment per the local authority having jurisdiction. Provide all seismic details with biosafety cabinet submittals indicating required wall construction such as wall stud size and gauge, point loads, etc.

L. ADA/Accessible Compliance: All biosafety cabinets shall be ADA/Accessible compliant. Height of work surface shall be mounted at 34” above the finished floor or as required to meet local accessibility requirements.

2.4 BIOLOGICAL SAFETY CABINET SCHEDULE: Refer to the lab drawings.

PART 3 - EXECUTION

3.1 EXAMINATION

A. Verify equipment rough in before proceeding with the work in this section.

B. Coordinate with other trades for the proper and correct installation of plumbing and electrical rough in and for rough opening dimensions required for the installation of products in this section.

3.2 INSTALLATION

A. Install in accordance with manufacturer's instructions.

B. Install in accordance with codes, regulations and standards required by the authority having jurisdiction.

C. Seismic Restraints: The biological safety cabinet manufacturer shall install the biological safety cabinets to resist seismic loading as required by the local governing codes. Install all anchorage devices, including special legs and or braces, required for seismic restraint of biological safety cabinets to satisfy all governing code requirements for seismic anchorage of equipment.

D. Install equipment plumb, square and straight with no distortion and securely anchor as required.

E. Sequence installation to ensure utility connections are achieved in an orderly and expeditious manner.

F. Touch-up minor damaged surfaces caused during installation. Replace damaged components as directed by Architect.

G. Equipment in this section shall be installed with all necessary fittings mounted for final connection by Divisions 22, 23 and 26.

3.3 ADJUSTING

A. Adjust operating equipment, with exception of air moving equipment, to efficient operation for its intended use, and as required by the manufacturer.

B. Perform Field Certifications: Refer to Section 1 of this specification section.

C. Balance and rebalance HVAC system as required to achieve certifications.

D. Touch up scratches on all painted surfaces.

3.4 CLEANING

A. Clean equipment, casework, countertops and all other surfaces as recommended by the manufacturer. Render all work to have and be in a new and unused appearance and condition.

B. Clean adjacent construction and surfaces, which may have been soiled in the course of installation of work in this section.

3.5 PROTECTION OF FINISHED WORK

A. Provide all necessary protective measures to prevent exposure of equipment and surfaces from exposure to other construction activity.

B. Advise contractor of procedures and precautions for protection of material and installed equipment and casework from damage by work of other trades.

3.6 DEMONSTRATION

A. Provide systems training and demonstration of all equipment operations, functions and field certification process, for duration of at least 8 hours.

B. Refer to Commissioning Specification for training requirements for specific systems and equipment. Training of the Owner's operation and maintenance personnel is required in cooperation with the Commissioning Consultant. Commissioning Specification lists the specific systems and equipment. A training agenda shall be prepared by the Contractor and approved by the Owner prior to training performance

END OF SECTION 11 53 53

SECTION 11 60 00

LABORATORY EQUIPMENT

PART 1 - GENERAL

1.1 DESCRIPTION:

A. Furnish and install all laboratory equipment as shown and specified.

B. Equipment items specified in this section include the following:

Contractor Furnished Contractor Installed (**CFCI**)

		Equipment Number* or ***Key **N**ote*
1.	Articulating Task Exhaust Units – Ceiling Mounted	**LE4B/LE4C**
2.	Articulating Task Exhaust Units – Ceiling/Wall Mounted	**LE4D** (Large)
3.	Gas Cylinder Restraint System	**LE1 / LE2**
4.	Safety Supply Cabinet	**KN 3**
5.	First Aid Kit	Inside KN 3
6.	Burn Kit	Inside KN 3
7.	Laboratory Coat Hook Strips	**KN 2**
8.	Lab Coat Racks & Shelf	**KN 23**
9.	Laboratory Spill Cart	**KN 21**
10.	Spill Cabinet	Field Locate
11.	MSDS Cabinet	Field Locate
12.	Laboratory Cart	**CART**
13.	Stainless Steel Floor Mounted Shelving	**KN 9**
14.	Lab Trash Container with Dolly	Field Locate
15.	Deionized Water Polisher (Type 1 water)	**WP**
16.	Paper Towel Dispenser	**KN 1**
17.	Evidence Drying Cabinet 32”	**ID5**
18.	Evidence Drying Cabinet 64”	**ID9**
19.	Bug Zapper	**KN 53**
20.	Super Glue Cabinets	**ID3 /CS1**
21.	Mop and Broom Holder Rack	**KN 91**
22.	Articulating Marker Board	**KN 100**
23.	Hydrogen Generator	**HG**
24.	Glassware Washer	**GW**
25.	Gas Cylinder Wall Bracket	**LE1A**
26.	UV Pass-Thru	**B14**
27.	Marble Table	**KN 116**
28.	Non Pass Thru Evidence Locker	**EL48-1**

Owner Furnished Contractor Installed **(OFCI)**

1.	Laboratory Refrigeration Units	**R1/R2/R3/R4/ R5/R6/R7**
2.	Laboratory Freezer Units	**F1/F2/F4**

Included in Division 26:

1. Overhead Power Reel **OHCR-1/OHCR-2**
2. Overhead Compressed Air Reel **OHCA**

C. Refer to Divisions 22, 23 and 26 and the mechanical and electrical drawings for related plumbing, mechanical and electrical work.

D. Equipment item locations are indicated in the lab casework plans by means of equipment numbers. The corresponding equipment numbers for each specified equipment item are also included in this specification.

1.2 RELATED DOCUMENTS: The completion of the work described in this Section may require work in or coordination with other Sections of these specifications. The Contractor and the subcontractor will be responsible for identifying and including all related work in other Sections of these specifications and/or drawings necessary for a complete installation of the work described in this Section. These related sections include, but are not limited to the following:

A. Drawings and general provisions of Contract, including general and Supplementary Conditions, and Division 1 Specifications, apply to this Section.

B. Division 123450: Laboratory Casework, Fixtures, Fume Hoods and Accessories

C. Division 6 & 9: Blocking and backing in walls for anchorage of equipment.

D. Refer to Divisions 22, 23 and 26 and the mechanical and electrical drawings for related plumbing, mechanical and electrical work.

E. System commissioning is a part of the construction process. Documentation and testing of systems, as well as training of the Owner's operation and maintenance personnel, is required in cooperation with the Commissioning Consultant. Substantial Completion is dependent on successful completion of all commissioning procedures, documentation, and issue closure. Refer to Commissioning Specification for detailed commissioning requirements.

1.3 QUALIFICATIONS

A. Manufacturer: Company specializing in manufacturing the Products specified in this section with minimum five years documented experience.

1.4 SUBMITTALS

A. Submit under provisions Division 1, General Requirements.

B. Product Data: Provide manufacturer's technical data, including equipment dimensions and construction, equipment capacities, physical dimensions, utility and service requirements and locations, point loads and factory finishes.

C. Manufacturer's Installation Instructions: Indicate special installation requirements.

D. Shop Drawings: Indicate equipment locations, large-scale plans, elevations, cross sections, details, plumbing and electrical rough in and anchor placement dimensions and tolerances and clearances required.

E. Coordination drawings: Equipment shall be fully coordinated with lab casework and other lab equipment. Prepare a coordination drawing showing locations of surrounding casework and equipment, and required clearances between them. At all under counter applications, verify that refrigeration units fit under the as-built counter height. At units that do not fit under the counter, provide replacement models that do fit in these applications.

1.5 FIELD MEASUREMENTS

A. Verify that field measurements are as indicated on shop drawings or as instructed by the manufacturer.

1.6 QUALITY ASSURANCE

A. Installers: Installation of the equipment specified under this section shall be undertaken by the manufacturer’s crew of installers, or a crew of installers who are approved in writing by the manufacturer. In either case, the installation of equipment specified under this section shall remain the responsibility of the manufacturer as a subcontractor to the general contractor.

1.7 CLOSEOUT SUBMITTALS: OPERATION AND MAINTENANCE DATA

A. Submit information in bound manual form, typed or computer word processed on 8-1/2" x 11" paper.

B. Operation Data: Include description of equipment operation, adjusting and testing required.

C. Maintenance Data: Identify system maintenance requirements, servicing cycles and spare part sources.

1.8 DELIVERY, STORAGE, AND HANDLING

A. Deliver, store, protect and handle products on the in such a manner as to minimize the risk of damage, decay, deterioration or loss from theft.

B. All products shall be delivered to the job site in manufacturer's original unopened containers, crates or protective wrappings with the manufacturer's name and address clearly labeled thereon.

C. Accept products on site and inspect on arrival for damage.

1.9 WARRANTY

A. Provide warranty under provisions of Division 1.

PART 2 - PRODUCTS

2.1 ACCEPTABLE PRODUCTS

A. Subject to compliance with these specifications, acceptable products include, but are not limited to, those items indicated in section 2.2, under each individual product. Products by other manufacturers submitted as equals will be reviewed for conformance with the specifications.

2.2 LABORATORY EQUIPMENT

A. General Requirements

1. All material and equipment specified under this section shall be designed and constructed specifically for use in wet chemistry, serological and/or toxicological laboratory environments. Manufactured equipment units must meet or exceed applicable performance, reference and certification standards.

2. Dimensions, capacities and specific requirements are nominal, and may vary depending on the manufacturer.

B. Articulating Task Exhaust Unit (75-100 CFM) – (Ceiling Mounted Snorkels, Equipment number **LE4B)**: Terfu MT 1650-100 (75mm / 4” ø) without light and **without user controlled damper**, by by Movex Inc. 5966 Keystone Dr. Bath, PA 18014. United States. Phone: 610-440-0478 or approved equal prior to bid.

1. General: Provide and install units as shown on the drawings. Total reach of flexible arms shall be 59”, with dimension of the ‘A’ starting section to be 10”, arm section ‘B’ to be 30” and arm section ‘C’ to be 17.5”. Diameter of sections to be 4”. Provide ceiling brackets as required (LE4B) for the task exhaust mounting height of 84” (88”) AFF (Verify in field.). Funnel head shall be movable around the work surface by means of triple-joint/swivel-base design, and may be placed stationary at any location. Units shall **NOT** include a damper control mechanism. Provide

and install units as shown on the drawings. Fixtures shall be ceiling mounted. Exact location of ceiling mount shall be located and coordinated by the laboratory equipment subcontractor in the shop drawings and coordinated to the reflected ceiling plans.

Equipment supplier shall be responsible for all interfacing steel above the ceiling for the support and anchorage of the task exhaust unit.

2. Materials: Arm pipes shall be manufactured of Anodized Aluminum (SS4104).

3. Exhaust system: Task exhaust units shall be ducted to the building exhaust system as indicated in the mechanical drawings or as recommended by the manufacturer. Extend duct, concealed above ceiling to the laboratory exhaust system as indicated in mechanical drawings. Laboratory equipment subcontractor shall provide a coordination drawing showing optimum ducting arrangements. Exhaust airflow at funnel shall be between 75 and 100 CFM.

4. Local controls: Each unit shall **NOT** be provided with a damper to control exhaust rates individually and shall be constant volume flow.

5. Accessories: Provide each task exhaust unit with two hood units, funnel head of powder-coated aluminum. These hoods are to be easily interchanged by lab staff to suit their particular needs. Additionally, provide ceiling bracket and all other required mounting devices for a complete and operational installation.

   a) Hood: Round Metallic Hood
   b) Hood: Flat Plate Metal Hood

7. Task exhaust unit shall be seismically anchored as required by local codes.

8. Interfacing Steel: The manufacturer shall provide all interfacing steel for the proper support and anchorage of the task exhaust systems to the building structure above. Provide as part of shop drawings a coordination drawing showing all required blocking and interfacing steel, concealed in ceiling.

9. Ceiling bracket: 40” standard mounting bracket or as required to achieve a base mounting height of 84” AFF. Provide escutcheon plate at the ceiling penetration.

C. Articulating Task Exhaust (150-200 CFM) Unit - Ceiling Mounted Snorkels, (Equipment number **LE4C),** by Movex Inc. 5966 Keystone Dr. Bath, PA 18014. United States. Phone: 610-440-0478 or approved equal prior to bid:

1. General: Provide and install units as shown on the drawings. Total reach of flexible arms shall be 55”, Diameter of sections to be 4”. Provide ceiling brackets as required for the task exhaust mounting height of 84” (88”) AFF (verify in field). Funnel head shall be movable around the work surface by means of triple-joint/swivel-base design, and may be placed stationary at any location. Units shall **NOT** include a damper control mechanism. Provide and install units as shown on the drawings. Fixtures shall be ceiling mounted where indicated. Exact location of ceiling mount shall be located and coordinated by the laboratory equipment subcontractor in the shop drawings.

   Equipment supplier shall be responsible for all interfacing steel above the ceiling for the support and anchorage of the task exhaust unit.

2. Materials: Arm pipes shall be manufactured of Anodized Aluminum pipe with white joints (PP).

3. Exhaust system: Task exhaust units shall be ducted to the building exhaust system as indicated in the mechanical drawings or as recommended by the manufacturer. Extend duct, concealed above ceiling to the laboratory exhaust system as indicated in mechanical drawings. Laboratory equipment subcontractor shall provide a coordination drawing showing optimum ducting arrangements. Exhaust airflow at funnel shall be 150-200 CFM.

4. Local controls: Each unit shall **NOT** be provided with a damper to control exhaust rates individually and shall be constant volume flow.

5. Accessories: Provide each task exhaust unit with two hood units, funnel head of powder-coated aluminum. These hoods are to be easily interchanged by lab staff to suit their particular needs. Additionally, provide ceiling bracket and all other required mounting devices for a complete and operational installation.

   a) Hood 1: Alsident system 100, 14” Round Metal Hood.
   b) Hood 2: Alsident system 100, 8” Flat Plate Metal Hood.

6. Task exhaust unit shall be seismically anchored as required by local codes.

7. Interfacing Steel: The manufacturer shall provide all interfacing steel for the proper support and anchorage of the task exhaust systems to the building structure above. Provide as part of shop drawings a coordination drawing showing all required blocking and interfacing steel, concealed in ceiling.

8. Ceiling bracket: 40” standard mounting bracket or as required to achieve a base mounting height of 84” AFF.

D. Articulating Task Exhaust –Large (Equipment number **LE4D)** (400-500 CFM) Model 10522435 fume extractor with model 10332060 hood and damper. Large task exhaust units shall be by Nederman, Inc.; Westland Michigan, or equivalent products manufactured by Enviroflex, Buffalo, NY; Movex Inc., Bath, PA; or approved equal. Provide and install units as shown on the drawings with the following features:

1. 14' flexible duct system, damper unit, hood to hose adapter, extension hood and ceiling telescopic bracket. Fixtures shall be ceiling mounted, with 360 degree swivel capability. Additional accessories: hood to hose adaptor, Part no. 10506535. 4" diameter, 25 foot hose, Part no. TDS 4 x 25.

2. Materials: Unit shall be fabricated from polypropylene plastic with a temperature resistance of approximately 121 deg F.

3. Exhaust system: Task exhaust units shall be ducted to the building exhaust system as indicated in the mechanical drawings or as recommended by the manufacturer. Extend duct, concealed in service cores and service chases formed by laboratory casework and walls to the laboratory exhaust system as indicated in mechanical drawings. Laboratory equipment subcontractor shall provide a coordination drawing showing optimum ducting arrangements.

4. Local controls: Each unit shall be provided with a damper to control exhaust rates individually.

5. Provide all required mounting devices and brackets for complete and operational installations. The manufacturer shall provide all interfacing steel for the proper support and anchorage of the task exhaust systems to the building structure above. Provide as part of shop drawings a coordination drawing showing all required blocking and interfacing steel for the support and anchorage of task exhaust unit and related components.

6. Air flow: 400-500 cfm; ducting diameter 6.25".

E. Gas Cylinder Restraint System Units: "STRS" by Safe-T-Rack Systems, Inc., (Equipment number **LE1 / LE2**), Rocklin, California, or approved equal prior to bid.

1. 2" x 2" steel tube assembly, all joints fully welded and ground smooth, primed and painted for exterior use.

2. System shall allow for the side-by-side storage of multiple pairs of gas cylinders placed front-to-back. Each gas cylinder shall be restrained within the steel tube frame with a flexible chain and hood assembly.

3. Steel tube assembly shall be securely anchored to the concrete floor or wall by means of anchor bolts or weld plates. All welds shall be cleaned, primed and painted to match surrounding finishes.

4. Size & configuration: As detailed on the drawings with starter rack and add on racks.

F. Safety Supply Cabinet (**KN 3**)

1. Safety Supply Cabinet
   a. Basis of specification: Karp Associates Inc. Products of Acudor or Bobrick, provided they comply with features listed below, will be considered acceptable.
2. Model: Customized version of Karp KRVB Valve Box
3. Features:
   a. Size: Inside box dimensions: 12”w x 18” h x 4” d
   b. Style: fully recessed, with overlapping trim, door flush with trim, one adjustable shelf.
   c. Single flat door.
      1. Door material: solid panel, 14 gauge stainless steel, satin finish
      2. Flush mounted paddle handle, finished to match door
      3. Hinge: concealed piano hinge
   d. Trim: Same material and finish as door, arc welded and ground smooth.
   e. Signage: Signage: Provide self adhesive signage in compliance with ANSI Z-535 on each door with the message “First Aid Station”, the universal First Aid cross and the heading “Emergency” in the color Safety Green and White; from Grainger, model number LFSD903VSP, www.grainger.com
   f. Box interior finish: Stainless steel sheet, satin finish.
   g. Provide 1/4” diameter holes inside box on 4 sides for mounting in laboratory casework.
   h. Install one first aid kit and one burn kit in each safety supply cabinet.
   i. Quantity of safety supply cabinets: At locations shown in the drawings.
   j. Shelf: Provide 1 shelf, centered.

G. First Aid Kit (Inside Safety Supply Cabinet)
1. Manufacturer: Johnson & Johnson, or equivalent products of Uline or Fisher Scientific.
2. Product: Small Industrial First Aid Kit
3. Product No.: 39N794
4. Supplier: Grainger (800) 472.4643, www.grainger.com
5. Size 6-1/2” x 9-1/2” x 2-3/4”, or as required to fit into the safety cabinet.

H. Burn Kit (Inside Safety Supply Cabinet)
   1. Manufacturer: WATERJEL Technologies, or equivalent products of Grainger or Fisher Scientific.
   2. Product: Food Service Kit
   3. Product No.: 9RTV3
   4. Supplier: Grainger (800) 472.4643, www.grainger.com
   5. Size: 10” x 7” x 3”, or as required to fit into the safety cabinet.

I. Laboratory Coat Hook Strips: (**KN 2**)
   1. Manufacturer: Bradley Corporation, or equal products by America Specialties or AJW Architectural Products
   2. Coat Hook: Model No. #9943 - 36”L and #9942 - 24”L Hook Strip
      a. Stainless steel with bright polish finish
      b. Mount at 48” and/or 54”, as noted in drawings.
      c. Quantity/size: where shown on drawings (3 hook = 24”, 4 hook = 36”)

J. Lab Coat Racks & Shelf: (**KN 23**) Wall mounted, adjustable elevation coat rack with clothing rod.
   1. Manufacturer: Magnuson Group
   2. Model: Architectural series WHO2-A
   3. Finish:
      a. Shelf Tubes: Aluminum
      b. Brackets: Medium Gray
      c. Wall Mount: Medium Gray
      d. Hanger Rod: 1” diameter Charcoal Gray with Chrome Hooks
   4. Provide each coat rack with 12 MG17PH hangers.
   5. Mount bottom spacer of clothing rod bracket at 48” AFF, adjustable up to 60” AFF.

K. Laboratory Spill Cart (**KN 21**)
   1. Manufacturer: Grainger (800) 472.4643, www.grainger.com
   2. Model No. 66861 2NCP2 small response cart, 39” high x 18” wide x 20” long, fully stocked.
   3. Quantity: where shown on drawings

L. Spill Cabinet-Double Cabinet (Field Locate – 1 per floor)
   1. Manufacturer: Grainger (800) 472.4643, www.grainger.com
   2. Model No. Hazorb 21101, fully stocked.
   3. Quantity: Field locate 1 at each end of corridor.
   4. Mount recessed in wall.

M. MSDS Cabinet (Field Locate – 1 per floor)
   1. Manufacturer: Grainger (800) 472.4643, www.grainger.com
   2. Hazard Information Center Cabinet with swing down shelf, Model No. 5BC-11620, supplied with MSDS Binders, flashlight & batteries.
   3. Quantity: Field locate 1 near Admin.
   4. Mount recessed in wall.

N. Laboratory Cart (Equipment Number **CART**): Lakeside All-Welded Stainless Steel Carts, Supplied by Grainger (800) 472.4643, www.grainger.com.

1. Model Number: 422 all stainless steel
2. Size: 19” W x 31” L x 33-3/8” H
3. Type: Angle – leg Utility cart with 3 shelves
4. Shelf size: 18” x 27” with 1” lip on 3 sides
5. Shelf Clearance: 11-7/8”
6. Load capacity: 400 pounds
7. Caster size: 4” non-locking

O. Stainless Steel Floor Mounted Shelving (**KN 9)**

1. Manufacturer: Metro, HD Super adjustable shelf unit
2. Quantity: Where shown on lab plan drawings to maximize linear feet of shelf.
3. Material: Shelving: All 16-gauge stainless steel; posts to be stainless steel.
4. Shelf Size: Shelf depth to be 18” or 24” as shown in drawings. Shelf width to maximize linear feet of shelf available.
5. Post Size: 1 5/8” diameter.
6. Height: 72”.
7. Secure units to wall to prevent tipping once owner has approved final installation.

P. Lab Trash Container with Dolly (Field Locate by Owner): Provide a total of **40 sets**. Each set to include one trash container and one dolly or approved equal prior to bid submission.

1. Trash Container as manufactured by Rubbermaid, Model Brute FG263216GRAY 32 Gallon Trash Container.
2. Color: Gray
3. Capacity 32 Gals.

1. Dolly as manufactured by Rubbermaid, Model Brute 2640 Trash Container Dolly
2. Color: Black
3. Fits Rubbermaid Brute or Continental Huskee 20, 32, 44 or 55 gallon trash containers
4. 3” commercial grade heavy duty casters
5. Capacity: 250 lbs.

Q. Deionized Water Polisher (Type 1 water): (Equipment Number **WP** located by **KN 81**) Millipore Direct-Q 8 UV Water Purification System with Q-Pod, wall or counter mounted dispenser and 10L reservoir tank by EMD Millipore, Division of Merck, Darmstadt, Germany (800) 645-5476 or Thermo Scientific Barnstead Smart2Pure 12 L/h UF or approved equal.

1. Produce ultrapure 18-Meg Ohm water per the quantitative specification for Type I water as described in ISO 3696, ASTM D1193, and of EP and USP Purified Water.
2. Connects to ½" diameter house water source.
3. System to be counter or wall mounted.
4. Location: See lab drawings.

R. Laboratory Paper Towel Dispensers (**KN 1**)
1. Manufacturer: Bobrick Washroom Equipment, or equal products by America Specialties or Bradley Corporation
2. Model: B-262, ClassicSeries Surface Mounted
   a. Stainless steel satin finish
   b. Quantity: where shown on drawings
   c. Mounting Type: Wall Surface
   d. Size: 10-3/4"w x 14"h x 4"d

S. Evidence Drying Cabinets - Ducted Exhaust: (Equipment number **ID5/ID9)**: 32" and 64" wide products by Mystaire Misonix Inc., or approved equal manufacturer submitted prior to general contractor bid submission. Model **FR-3100D and FR-6100D.**

1. General: Ducted Forensic evidence drying cabinets *modified by the manufacturer to be connected to lab exhaust system* and designed to store a variety of evidence items including clothing, shoes, blankets and other materials that must be kept in a controlled and stable environment while drying. Drying Cabinets shall include a self-contained air recirculation system with pre-filter. Provide units with manual wash down capability. Provide removable polypropylene trays and formalin vaporizer.

2. Materials:

   a. Cabinet and trays: White, chemical resistant polypropylene.
   b. Door: Clear Acrylic, 3/8" thickness with lock.
   c. Coat rack and removable shelf: Powder coated white stainless steel.
   d. Lock: Locks shall be **BEST, & Co. 5L Series Latch Bolt Cabinet Locks, with a 5 pin locking system**, heavy-duty cylinder type. Master keyed to Owners requirements.
   e. Shelf: Removable, Polypropylene.

3. Electrical: 110V, 60hz, GFI, plug in cord minimum 8' long.

4. Filters:
   a. Particulate pre-filters.
   b. Provide 3 sets of extra filters for future use by Owner.

5. Alarms: Visual air monitoring alarms shall be included to warn operator of low flow, to replace pre-filters and vaporizer control outlet.

6. Exhaust Duct Collar: Drying cabinets shall be exhausted through a flexible duct connection to the laboratory exhaust system.

   a. Provide drying cabinets with the manufacturer's standard exhaust duct collar at top of unit.
   b. Provide a flexible duct from the top of the drying cabinet to the ceiling. Flex duct shall be long enough to move cabinet out of it's footprint for cleaning purposes.
   c. Exhaust airflow per manufacture design.

7. Plumbing:
   a. Provide gravity drainage system draining through a 1½" flexible hose discharging into a hub floor drain.
   a. Provide 8' of hose to be field trimmed to fit and inserted into hub drain.
   b. Provide drying cabinets with the manufacturer's standard hose (min 8' length) and hanging rack on side of unit.
   c. Provide connection to hose bib cold water supply at rear of unit with an 8' hose connected to hose bib.

8. Accessories:
   a. Provide squeegee for cleaning.

T. Bug Zapper (**KN 53**) manufactured by Paraclipse of Columbus, Nebraska. Contact www.paraclipse.com, 2271 East 29th Ave., Columbus, NE 68601, (800)854-6379, or approved equal prior to bid submission.
   1. Provide Paraclipse automated insect control model: Paraclipse Terminator wall mounted with UV light attractants and trapping surface. Website does not display wall mount unit, but the unit is available by phone.
   2. Cartridge advance shall be automatic in 60-day increments.
   3. End of cartridge audible alarm.
   4. Provide 5 replacement cartridges as attic stock in addition to the one provided during installation for each unit.

U. Super Glue Cabinet (Equipment number **ID3** and **CS1**): Manufactured by Mystaire, Creedmoor, NC 27522; (919) 229-8511, www.mystaire.com, or approved equal prior to Contractor bid submission.

   1. General: Single chambered, recirculating, atmospheric cyanoacrylate fuming chamber with integral fume removal system and manual electrical plug.
   2. Model Number:
      a. **ID3** - Model CA3000: 39"w x 53:h x 32"d
      b. **CS1** – Model CA9000: 72"w x 94"h x 48"d, with exhausted fume removal system

3. All metal frame construction
4. Automatic locking safety glass viewing door
5. Self-contained ductless filtration (500 cycles per filter)
6. Vapor-proof internal fluorescent lighting
7. Controller Features:
    a. LCD display of fuming options
    b. Programmable humidity control
    c. User-defined fuming cycle length
    d. Programmable internal circulation fan

V. Mop and Broom Holder Rack (**KN 91**):
1. Manufacturer: American Specialties, Inc., 914.476.9000; www.americanspecialties.com, or equal products by Bobrick or Bradley Corporation
2. Model no. 8215-3.
3. Quantity: Where shown on drawings.
4. Blocking: Provide where needed

X. Articulating Marker Board **(KN 100),** Articulating Marker Board with support arm and board
1. Manufacturer: Ergotron 400 Series Wall Mount Arm
2. Model: 45-007-099 with no electrical cables necessary
3. Color: Grey
4. LDC mount bracket shall be customized to receive a 24” x 24” framed white marker board with pen and eraser tray.
5. Marker board to be as specified in other sections.
6. Install wall blocking as needed.

Y**.** Hydrogen Generator (Equipment number **HG)**

1. Manufacturer: Parker Hannifin Corporation, Filtration and Separation Division, 242 Neck Road, Haverhill, MA 01835. Contact Phone: (800) 343-4048, or approved equal prior to contractor bid submission.
2. Model: H2PEMPD-510-100
3. Purity: 5.0 (99.999%)
4. Maximum Hydrogen Flow Rate: 510 cc/min
5. Dimensions: 17.1”h x 13.5”w x 21”d (43.5cm x 34cm x 53cm)

Z. Laboratory Glassware Washer: (Equipment number **GW)** Model No. G7883 AE & by Miele Inc., Princeton, New Jersey, or equal products by Labconco, Fisher Scientific or other manufacturers.

1. General: Automatic program laboratory glassware washer. Features 8 automatic wash programs, 2 utility programs, and one custom program. Accepts baskets and optional inserts designed to hold laboratory glassware, including baskets for direct injection cleaning of narrow-necked glassware on one or two levels

a. Custom Program: Modifiable program for end-user
b. Inorganic: Pre-wash, wash, 4 rinses (3 DI)
c. Organic: 2 washes, 4 rinses (2 DI)
d. Standard: Main wash, 4 rinses (two DI)
e. Universal Pre-wash, main wash, 4 rinses (two DI)
f. Intensive: 2 pre-wash, main wash, 4 rinses (three DI)
g. Plastic: Low temperature program for plastic ware
h. Drain: Utility program to drain washer
i. Rinse: One rinse to “wet“ items, or rinse chamber
j. Various TD: Thermal disinfection program
k. Special: Wash at 93°C with 10 minute hold, 3 rinses (one DI). For thermal disinfection

2. Materials:

   a. Exterior cabinet. Constructed of type 304 brushed stainless steel for corrosion-resistance. Space frame construction allows easy removal of side and top panels for service, and recycling at end of machine life

   b. Interior: Chamber walls and ceiling are constructed of type 304 stainless steel. Chamber floor and door are constructed of type 316 stainless steel. All surfaces are polished for increased corrosion-resistance. Chamber is laser welded, exterior to wash cabinet allowing for no weld marks where corrosion could occur.

3. Dimensions:

   a. Exterior (G7883): 33.5”H x 23.5”W x 23.5”D.
   b. Interior: 18.5”H x 20.5”W x 20.5”
   c. Designed for under counter applications.

4. Spray System: Built-in upper and lower spray arms. Lower spray arm includes spray nozzles and speed adjustment for optimal performance.

5. Flow Meters: water intakes include flow meters to measure water fill level. Allows for adjustable water levels. System includes back-up float switch to protect against over-fill.

6. Steam Condenser: Water-cooled condenser removes steam and sends it to drain. No potentially hazardous vapors are released into the lab.

7. Waterproof System: Incoming Hot, cold and DI water lines are double wall with electronically activated solenoids. Includes float sensor in washer drip pan. In event of leak float switch is tripped which shuts of incoming water and activates drain pump.

8. Dual Temperature Sensors: Two NTC sensors, one to measure water temperature, second to check tolerance of first sensor for back up.

9. Dual pump system: Washer incorporates separate pumps for circulation and draining to eliminate cross-contamination and increase pump life.

10. Water softener: Built-in adjustable water hardness control automatically softens water.

11. Detergent Dispenser: Automatic powder detergent dispenser, spring loaded door cup type. Optional liquid detergent dispenser is available.

12. Neutralizer Dispenser: Automatic liquid acid neutralizer dispensing from off-board 5 liter container.

13. Circulation Pump: Rated at 106 gallons per minute, constructed with ABS plastic impeller and housing. Pump includes a speed sensor to shut motor off in the event of a blockage, to increase pump life

14. Wash Water Temperature: Adjustable up to 93°C (199.4°F) maximum temperature.

15. Final Rinse Water Temperature: Adjustable up to 93°C (199.4°C) maximum temperature.

16. Heater rating: 6000W heater for efficient, fast heating of water.

17. Test port: Access port for monitoring of wash temperatures for validation.

18. Electrical Requirements: 3 Phase, 208/220V, 60Hz, 20A, 6.0kW load or 1 Phase, 208/220V, 60Hz, 40A, 6.0kW total load.

19. Plumbing Connections:

    a. Hot Tap Water connection for wash cycle: One ½” ID pressure hose, 5 ft. long provided for connection to ¾” male hose thread. Maximum incoming water temperature 70°C. Input pressure 10-145 PSI.
    b. Cold Tap Water connection for rinse cycles: One ½” ID pressure hose, 5 ft. long provided for connection to ¾” male hose thread. Input pressure 10-145 PSI.
    c. Final DI Rinse Water Connection: One ½” ID pressure hose, 5 ft long provided for connection to ¾” male hose thread. DI water source input pressure (flow rate) Recommended: 25-60 PSI, Acceptable: 10-145 PSI. Optional DI pump kit is required for input pressure is below 10 PSI.
    d. Drain Connection: One 7/8” ID flexible drain hose, 5 ft long is provided for connection to a separate standpipe. Maximum drain height is 3 ft; flow rate is 2.5 gallons per minute.

20. Drying System:

a. (G7883CD) HEPA-filtered forced-air drying system with adjustable time and temperature settings. (G 7883) Gravity-conveyed 10 minute drying system which may be turned either on or off in each cycle.

21. Inserts & Baskets: Provide the following with each lab washer:
    a. O188 Upper basket
    b. U874 Lower basket
    c. E340 Half Injector basket
    d. E109 Half Injector
    e. O175 Upper Injector basket
    f. U175 Lower injector basket

AA. Gas Cylinder Wall Bracket (Equipment Number **LE1A**): by Troemner, Inc., www.troemner.com/equip_cylinder_wall.php, or approved equal.

1. Model 974037 wall bracket with message strap and chain fitting cylinders from 4" to 14" diameter.

2. System shall allow for the side-by-side storage of multiple gas cylinders placed side-by-side. Each gas cylinder shall be restrained with a flexible chain and hood assembly.

3. Bracket assembly shall be securely anchored to wall blocking by means of anchor bolts.

4. Configuration: As detailed in the drawings.

BB. UV Pass-Thru (Equipment Number **B14**): Stainless Steel Pass-Thru cabinet manufactured by ATMOS-TECH INDUSTRIES, 1108 Pollack Ave., Ocean, NJ 07712, Model PT1818-18, www.atmostech.com, or approved equal prior to General Contractor bid submission.

1. Materials: Unit to be constructed of 16 gauge, Type 304 stainless steel
2. Doors: Doors to be solid framed with 1/4" safety glass view window both sides of unit, 20 gauge, type 304 stainless steel with a #4 finish and 1/4" turn chrome plated handles, fully gasketed. Doors to be interlocking to only allow one door to be in the open position at a time.
3. Mounting angle to be 1"x1", 16 gauge, 304 stainless steel (un-attached)
4. Dimensions: 18"x18"x18" interior box size with all surfaces to be free and clear of seams with coved inside corners on all sides for ease of cleaning.
5. Finish: All components of the unit are to be #4 stainless steel
6. UV Light: UV light shall be included.

CC. Marble Table (**KN 116**):

1. Manufacturer: Gawet Marble & Granite, Inc., 805 Business Route 4, PO Box 219, Center Rutland, VT 05736. Contact Ph. (802) 773-8868,

www.gawetmarble.com, or equal product pre-approval in writing prior to General Contractor bid submission.

1. Overall Dimensions: 35”w x 24”d x 31”h.
2. Top and Base Support thickness: 3”.
3. Weight: 700 lbs.
4. Table Base Reinforcement: Cast iron support pipe.
5. Table Top Edges: Rounded.
6. Finish: Matte machined.
7. Sealant: Table top and edges shall be treated with three coats of BulletProof™ sealer from Dupont/3M.

DD. Non Pass Thru Evidence Lockers (**EL48-1**); SpaceSaver DSM model STANDARD NON PASS THRU, manufactured by DSM Law Enforcement Products, Contact: (800) 492-3434 or equal approved prior to contractor submission.

1. Materials: Minimum 16 gauge cold rolled steel, except base which shall be minimum 14 gauge and inner skins which shall be minimum 18 gauge.
2. Cabinet design for both: overall size shall be 36” wide x 24” deep x 82” tall; provided with leveling adjusters.
3. Hinges: Continuous-type hinges, 1.5” open with a maximum of 3” between the welds, with one end welded to prevent removal of hinge pin.
4. Front doors: Shall be removable only when in the open position; shall be self-closing and unable to be reopened once push closed. Pulls shall be recessed.
5. Rear doors for Pass-through: Shall be full size of locker unit to allow full rear access to all compartments when opened. Rear door shall have continuous hinge along entire length of door. There shall be no access to the rear door locking mechanism from the front.
6. Finish: All exposed edges and joints smoothed and rounded. Paint finish shall be powder coated, Beige color.
7. Locker unit shall be seismically anchored as required by local codes.

PART 3 - EXECUTION

3.1 EXAMINATION

A. Verify equipment rough in before proceeding with the work in this section.

B. Coordinate with other trades for the proper and correct installation of plumbing, mechanical and electrical rough-in, and for rough opening dimensions required for the installation of products in this section.

C. Examine substrate surfaces and associated work and conditions under which work will be installed. Do not proceed until unsatisfactory conditions have been corrected in a manner complying with the Contract Documents and

acceptable to the installer. Starting of work within a particular area will be construed as installer's acceptance of surface conditions.

3.2 INSTALLATION

A. Install in accordance with manufacturer's instructions.

B. Install in accordance with standards required by authority having jurisdiction.

C. Anchor equipment securely in place where required.

D. Touch-up minor damaged surfaces caused during installation. Replace damaged components as directed by Architect.

E. Equipment in this section shall be installed with all necessary fittings mounted for final connection by Divisions 22, 23 and 26.

3.3 ADJUSTING

A. Adjust operating equipment to efficient operation for its intended use, and as required by the manufacturer

3.4 DEMONSTRATION

A. Provide systems training and demonstration of all equipment operations, and functions, for a duration of at least 8 hours.

B. Refer to Commissioning Specification for training requirements for specific systems and equipment. Training of the Owner’s operation and maintenance personnel is required in cooperation with the Commissioning Consultant. A training agenda shall be prepared by the Contractor and approved by the Owner prior to training performance.

END OF SECTION 116000

SECTION 11 78 10

AUTOPSY & MORGUE EQUIPMENT

PART 1 - GENERAL

1.1 SUMMARY

A. Furnish and install all autopsy and morgue equipment as shown and specified.

B. Work included (Contractor furnished & Contractor installed)

1. Backdraft Dissecting Stations w/ Wing	**ME1**
2. C-Arm Body Transporter (Body Carrier)	**ME2A**
3. Stainless Steel Body Trays	**ME2B**
4. Bariatric Body Carrier w/ Attach SS Tray	**ME3**
5. X-ray Body Trays (Plastic Body Tray)	**ME2C**
6. Recessed Body Scale w/ Digital Readout	**ME5 & Key Note 63**
7. Stainless Steel Wall and Corner Guards	**Key Notes 86 & 87**
8. Body Lift – Relocate Existing	**ME10**
9. Body Fork Lift	**ME29**

1.2 RELATED DOCUMENTS: The completion of the work described in this Section may require work in or coordination with other Sections of these specifications. The Contractor and the subcontractor will be responsible for identifying and including all related work in other Sections of these specifications and/or drawings necessary for a complete installation of the work described in this Section. These related sections include, but are not limited to the following:

A. Section 123450 – Laboratory Casework, Stainless Steel Cabinetry, Fume hoods and Accessories.

B. Divisions 22, 23 and 26.

C. System commissioning is a part of the construction process. Documentation and testing of systems, as well as training of the Owner's operation and maintenance personnel, is required in cooperation with the Commissioning Consultant. Substantial Completion is dependent on successful completion of all commissioning procedures, documentation, and issue closure. Refer to Commissioning Specification Section for commissioning requirements.

1.3 SUBMITTALS

A. Submit under provisions of Division 1.

B. Shop Drawings: Indicate equipment locations, large scale plans, elevations, cross sections, details, rough-in and anchor placement dimensions and tolerances and clearances required.

C. Product Data: Provide manufacturer's technical data, including equipment dimensions and construction, equipment capacities, physical dimensions, utility and service requirements and locations, point loads and factory finishes.

D. Manufacturer's Installation Instructions: Indicate special installation requirements.

E. Structural Calculations: Provide for body hoist system.

1.4 OPERATION AND MAINTENANCE DATA

A. Submit information in bound manual form, typewritten or computer word-processed on 8-1/2" x 11" paper.

B. Operation Data: Include description of equipment operation, adjusting and testing required.

C. Maintenance Data: Identify system maintenance requirements, servicing cycles and spare part sources.

1.5 QUALITY ASSURANCE

A. Manufacturer: Company specializing in manufacturing the Products specified in this section.

B. Single Source Responsibility: The dissecting stations and associated body transporter carts and body trays shall be provided by one manufacturer to ensure complete compatibility between all related components.

C. Electrical components including motors, disconnect switches, motor controllers, motor control devices, and electrical circuits and connections shall conform to requirements of NFPA 70. All electrical wiring, conduit, and all electrical devices necessary for the installation and operation of the system and equipment are furnished.

1.6 DELIVERY, STORATE, AND HANDLING

A. Deliver, store, protect and handle products on the site in such a manner as to minimize the risk of damage, decay, deterioration or loss from theft.

B. All products shall be delivered to the job site in manufacturer's original unopened containers, crates or protective wrappings with the manufacturer's name and address clearly labeled thereon.

C. Accept products on site and inspect on arrival for damage.

1.7 FIELD COORDINATION WARANTY

A. Verify that field measurements are as indicated on shop drawings or as instructed by the manufacturer. Coordinate final openings, sizes and utility rough-in locations with the appropriate trades.

1.8 WARRANTY

A. Provide warranty under provisions of Division 1.

PART 2 - PRODUCTS

2.1 ACCEPTABLE MANUFACTURERS

A. Provide products as manufactured by Mortech Manufacturing, Azuza, CA, www.mortechmfg.com (phone 800-410-0100), or equal products pre-approved in writing 10 days prior to bid date.

2.2 BACKDRAFT DISSECTING STATION with WING (Equipment Number **ME1)** – Cantilevered, wall mounted custom unit): Similar to Model # 1036-10, with size and configuration modifications as shown in the drawings. Basis of design by Mortech Manufacturing, Inc. or equal product approved prior to bid submission.

A. Material and Fabrication:

1. Dissecting sink station shall be fabricated from type 316 polished #4 finish stainless steel using all welded construction. Size, configuration and design of dissecting sink shall be in accordance with the drawings. Top with backsplash shall be 14-gauge material made into one smoothly integrated piece with all topside welds ground and polished to a sanitary finish.

2. Sink top shall include a sink basin, full width drain boards, backsplash, and a 2” x 2” square edge with a 1/8” radius along working sides and front. The front edge at the sink basin shall be lowered to accommodate the mobile body transporter. The height of the dissecting station, other than the sink, shall be 34” above the finished floor.

3. Inside corners of drain board shall have 3/4" radii.

4. Wall Attachment: Wall mounted dissecting station shall be cantilevered type. Number of supports shall be manufacturer's standard design. Top rear flange on sink sets into a full-length heavy gauge stainless steel "Z" mounting bracket, with support gussets anchored to an engineered steel structure concealed in the wall. Engineered steel structure shall be coordinated by the contractor with the wall attachment.

5. Apron: 18-gauge custom fitted to conceal the front and both ends of the dissecting station.

6. Depth of units shall be the manufacturer's standard 30" minimum and the width of units shall be as indicated on the drawings.

7. Welding: Joints shall be strong, ductile welds using the heliarc method, with exposed surfaces ground and polished to match adjacent surfaces. Welds shall be homogenous with the material joined, and free of imperfections such as pits, runs, spatter or cracks. Spot welding is not acceptable.

8. Refer to drawings for size and configuration of dissecting stations.

B. Shelf (**KN 102**): Shelf including support brackets shall be fabricated from a single piece of type 316, 14 gauge #4 finish stainless steel. Front and side edge of shelf shall be turned down 1".

C. Cart Latch Assembly: Assembly shall be designed to secure a transporter to the dissecting station at the sink. A slide latch shall engage the transporter leg to securely hold transporter in position. Sink bracket shall be fabricated of 14-gauge stainless steel housing and 3/8" diameter steel rod shall be used for the slide latch. The system can be engaged from either side of the carrier. One motion secures both sides of the carrier.

D. Removable Dissecting Surface: Surface shall be fabricated from 14 gauge, type 316 #4 finish stainless steel with 1/2" diameter perforations on 2-11/16" centers each way. The design of the surface shall include a device to position and restrict movement during use. Cantilevered supports shall hold the top of the surface 1/2" below the top of the station rolled edge so as to nest. The drain board below the dissection surface shall be completely clear of obstructions including bridging and supports.

E. Drawers (**KN 105**): Drawer bodies shall be one-piece construction with double pan fronts mounted on ball bearing slides. Built in safety stops shall be provided to control drawer removal. Front and side panels of drawer units shall be 18 gauge, type 316 #4 finish stainless steel, with joints made invisible by welding, grinding, and polishing to blend with the original finish of the adjacent metal. Front face of drawers shall be recessed ½" from apron face.

Apron drawer frame shall include a drip edge at the head to prevent liquids from dripping inside drawer body.

F. Portable Dissecting Wing (**KN 40**): Mobile wheel mounted wing used for dissecting when attached to the backdraft dissection station. Attachment to station shall be by the same method as the cart latch assembly.

1. Materials and Fabrication: Entire support frame shall be welded, type 316, 11 gauge polished stainless steel. Frame shall be designed specifically to support the portable dissecting wing surface and drain assembly, and shall include a 1-1/2" slope toward the dissecting station when engaged in the cart latch assembly. When in position at the dissecting station, the end of the wing shall overhang above the station such that the drain in the wing can be emptied directly into the station. Materials shall be as follows:

2. Legs: 1-1/2" O.D., 11 gauge tubing.

3. Tubing: 1-1/4", 11 gauge tubing; top holder: 1”, 11 gauge tubing

4. Wing supports: 11 gauge formed sections welded to wing. Wing shall be designed with a permanent slope of 1-1/2” in the drain board and level for the removable dissecting surface.

5. Wheels: 8" diameter rubber tires swivel casters, all of which shall be equipped with wheel brakes.

6. Support Frame: Design of the wing support frame shall match the body transporter frame to facilitate using the same cart latch assembly.

7. Wing Size: 30"W x 72"L x 5"H nominal with a design load of 400 pounds

8. Drain Board: Provide integral drain board with “V” shaped creased tray like bottom to promote positive drainage to drain hole without pooling within drain board. Drain shall be 1-1/4" diameter with rubber stopper provided.

8. Wing Removable Dissecting Surface: Surface shall be fabricated from 14 gauge, type 316 #4 finish stainless steel with 1/2" diameter perforations on 2-11/16" centers each way. The design of the surface shall include a device to position and restrict movement during use. Cantilevered supports shall hold the top of the surface 1/2" below the top of the wing rolled edge so as to nest. The drain board below the dissection surface shall be completely clear of obstructions including bridging and supports. Removable dissecting surfaces for the portable dissecting wing shall be interchangeable with the dissecting station.

9. Quantity: **Per Plan.**

G. Plumbing:

1. Plumbing Fixtures: All exposed plumbing fixtures, lines and fittings shall be chrome-plated brass. Unexposed plumbing components shall be brass and copper. Each dissecting station to have the following:

2. Dissecting Area Rinse Assembly: Stainless steel tubing with end caps and spray nozzles to provide a constant flow of water beneath the dissecting surface. Hot and cold water controls shall be mounted on the front the rear backsplash. Manufacturer shall be responsible for furnishing an effective flushing system of proven design based on previously made factory tests. Flushing action shall be designed to produce flooding over the entire drain board area without voids.

3. Hydro-Aspirator (**KN 97**): Shall contain a build-in vacuum breaker and control handle to be used to reverse the flow of water so as to direct it through the hose connections for either drawing fluid from the body cavity or water services. A clear vinyl plastic 10’ hose with 1/8" wall and a “J” hook or hose rack along with a cold water control valve shall be mounted to the backsplash.

4. Mixing Faucets (**KN 110**): Each autopsy sink shall be equipped with two hot and cold water mixing faucets with gooseneck spouts and wrist paddle handles with built-in vacuum breakers for backflow prevention.

5. Spray Hose Assembly (**KN 95**): Spray hose assembly shall have flexible opaque internally braided 10’ hose with chrome plated valve and hand controlled spray nozzle. Spray hose rack shall be mounted on the backsplash along with a hot & cold water control valve.

6. Plumbing shall be pre-plumbed to a single connection point for each service. Plumbing connections are: Cold water – 3/4”; Hot water – 1/2”; Drain – 2”.

7. Backflow Prevention: Unit shall be designed to prevent back-siphonage and backpressure of contaminated water into the potable water supply.

H. Disposer: Shall have the following features:

1. 2 hp, 115 VAC, 60 hz, 1 Phase commercial type, having a totally enclosed motor with built-in overload protection, all rated for heavy-duty service.

2. Exterior top shall be stainless steel and fitted with a rubber coupling/adapter mounting.

3. Grinding and Cutting Chamber: Chamber shall be lined with stainless steel. Grind ring shall be internally toothed, high carbon steel with a hard, heat-treated surface. Turntable shall be stainless steel, balanced dynamically and fitted with forged stainless steel, anti-jamming impellers that eliminate the need for motor reversing. Impellers shall incorporate tungsten carbide tips and surgical steel shearing blades. Particle discharge ports shall be design to not increase in size through usage.

4. Disposer, vacuum breaker with water inlet to sink, and switch shall be mounted at the factory. Switch shall be panel mounted with only the knob exposed. Provide a stainless steel standpipe, solenoid valve and flow control valve.

I. Electrical: Provide a convenience outlet combination ground fault circuit interrupter and duplex outlet with waterproof lift cover plate mount on a concealed, recessed conduit box. The whole assembly shall be panel mounted at the factory with only the plate exposed. Outlets shall be rated 15A, 125 VAC and shall accept polarized and non-polarized caps. Electrical shall be prewired to a single connection point. Dissecting station will require 2 circuits: 1 – 115v/60/1 20 amp circuit and 1 – 115v/60/1 20 amp circuit.

J. Ventilation: Provide three linear stainless steel exhaust air registers above the dissecting surfaces and at sink, as shown in the drawings. Additionally, provide two matching wall mounted stainless steel exhaust grilles in the same relative position below the dissecting station for mounting by the mechanical subcontractor. Air registers shall be a combination of a grille with fixed face bars positioned horizontally and an opposed blade damper. The face bars shall be non-adjustable and shall be set at a 45 degree angle, 0.67" on center. Each grille shall be provided with a rear damper, which shall be gang operated by means of a key, which can be removed after balancing. Additionally, each grille shall be designed with a rear mounted drainback lip, whose function is to drain back water which splashes into the grille. Actual size of registers shall be as shown in the drawings. Dissecting station manufacturer shall coordinate size, location and installation of air register assemblies with the HVAC contractor. Exhaust CFM per grille shall be approximately 200 CFM for each grille resulting in a total exhaust of 1,000 CFM per station.

K. Provide high intensity watertight task light fixtures over the work areas full width of the dissecting station, as shown on the drawing with LED fixtures having color temperature of 3500°K and CRI of 90. The units shall be UL approved for damp locations.

L. Mounting height: Refer to drawings.

M. Accessories: Provide 1 of the following items for each dissecting station:

1. Provide stainless steel post mortem scale; model 1309DD-AS with scale pole; model LW411, with modified bracket and 360 degree rotation with locking knob.

2. One set of molded plastic body supports; model LW392.

3. Over-the-body raised dissection platform; model LW380. All 316 stainless steel construction with recessed receiver and white poly dissecting board.

4. Solid plastic photo blue poly dissecting board custom cut to fit the over-the-body dissection platform; model LW389.

5. 6 position Teflon headrest; model LW390.

6. Welded in place 10” projecting x 12” wide small gram scale shelve where shown in the drawings. Electrical receptacle for each shelf per drawing. Small gram scale not in contract.

2.3 C-ARM BODY TRANSPORTER (Body Carrier) (Equipment Number **ME2A**): Model # 600014 C-Arm Accessible Autopsy Carrier by Mortech Manufacturing, Inc. or equal product approved prior to bid submission.

A. Materials and Fabrication: Entire frame shall be welded, type 316, 11 gauge polished stainless steel. Frame shall be designed specifically to receive the specified body transporter tray, and shall include a 1-1/2" slope toward the dissecting sink when engaged in the sink's locking mechanism. When in position at the dissecting sink the end of the tray shall overhang above the sink such that the sump drain in the tray can be emptied directly into the sink. Materials shall be as follows:

B. Legs: 1-1/2" O.D., 11 gauge tubing.

C. Tubing: 1-1/4", 11 gauge tubing; top tray holder: 1”, 11 gauge tubing

D. Tray supports: 11 gauge formed sections designed to securely hold tray in position without the use of any mechanical fasteners. Transporter shall be designed with a permanent slope of 1-1/2”.

E. Wheels: 8" diameter rubber tires swivel casters, all of which shall be equipped with wheel brakes.

F. Design of the specified body transporter shall work unimpeded in conjunction with portable, C-Arm x-ray equipment.

G. Quantity: **Per plan**.

2.4 STAINLESS STEEL BODY TRAYS – (Equipment Number **ME2B**): Model # T3614R by Mortech Manufacturing Inc. or equal product approved prior to bid submission.

A. Material: 14 Ga. Type 316 stainless steel #4 finish.

B. Size: 31"W x 82"L x 1.5"H nominal with a design load of 500 pounds

C. Fit tray with stainless steel radius rings to allow tray to fit on the c-arm body transporter requiring only one type of body transporter for standard size stainless steel and molded plastic trays.

D. Sump: Provide with integral sump at drain end of tray with “V” shaped creased tray bottom to promote positive drainage to drain hole without pooling within tray. Drain shall be 1-1/4" diameter with rubber stopper provided for each tray.

E. Quantity: **Per plan**.

2.5 BARIATRIC BODY CARRIER WITH ATTACHED SS TRAY (Equipment Number **ME3**): Model # 600009-HC by Mortech Manufacturing, Inc. or equal product approved prior to bid submission.

A. Materials and Fabrication: Entire frame shall be welded, type 316, 11 gauge polished stainless steel. Top Frame shall be designed specifically to receive the bariatric body transporter tray and shall include a 1-1/2" slope toward the dissecting sink when engaged in the sink's locking mechanism. When in position at the dissecting sink the end of the tray shall overhang above the sink such that the sump drain in the tray can be emptied directly into the sink. Additionally, provide a flexible hose with the table to enable the sump to to be drained into a floor sink or floor drain. Materials shall be as follows:

B. Legs: 1-1/2" SQ, 11 gauge tubing.

C. Cross Rails: 1-1/2" SQ, 11 gauge tubing.

D. Tray supports: 11 gauge formed sections designed to securely hold tray in position without the use of any mechanical fasteners. Transporter top frame shall be designed with a permanent slope of 1-1/2”.

E. Bariatric Tray: 12 gauge formed Type 316 stainless steel with a #4 Finish. Overall tray size to be 84”L x 42”W x 1-1/2”H. End toward the autopsy sink shall be tapered for use with standard autopsy station sink openings.

F. Wheels: 8" diameter swivel casters, all of which shall be equipped with wheel brakes and shall have an overall capacity of at least 1000 lbs.

G. Height Adjustment shall be via hand crank mechanism and elevate the tray height on the head end from 30.5” low to 36.5” high and on the drain end from 27.5” low to 33.5” high. The lift system consists of four lift cylinders which are connected by flexible tubing to central lift pump which is in turn activated by a drive mechanism. Lift is achieved by displacing hydraulic fluid from the pump to the cylinders. All cylinders shall work in unison – even under unbalanced loading conditions to maintain a consistent 3” slope to drain. All flexible tubing lines shall be concealed and protected under the lower stainless steel shelf of the carrier. Lift capacity shall be a minimum of 1000 lbs.

H. Quantity: **Per plan**

2.6 X-RAY BODY TRAYS without CASSETTE HOLDER (Plastic Body Tray) (Equipment Number **ME2C**): Model # T3603 by Mortech Manufacturing Inc. or equal products approved prior to bid submission.

A. Material: Hi-tech molded plastic with beige gel coat finish or composite, compression molded plastic. Units shall be completely molded from a single form mold. <u>Tray material shall be suitable for the x-ray of bodies while on the tray, without adversely affecting the quality of x-ray images</u>.

B. Size: 30 1/2"W x 82"L x 3 5/8"H - 2 ¾”H nominal with perimeter gutter and a design load of 500 pounds.

C. Sump: Provide with integral half round sump at drain and collection point for perimeter gutter. Drain shall be 1-1/4" diameter with rubber stopper provided for each tray.

D. Tray shall be sufficiently reinforced, without mechanical fasteners, to allow the tray to be lifted by a standard forked cadaver lift without any damage to the tray whatsoever.

2.7 RECESSED BODY SCALE WITH DIGITAL READOUT (Equipment Number **ME5**): Model LW457 QC by Mortech Manufacturing Inc. manufactured by Rice Lake Weighing Systems Roughdeck QC (*Quick Clean*) #50411 with model 420 Plus HMI Digital Weight Indicator, or equal products approved prior to bid submission.

A. Recessed pit mounted floor scale with digital readout, pit frame and weight plate. Weigh plate shall be 304 stainless steel 4' x 6' “*Slip NOT*” plate. Capacity shall be 5,000 lbs minimum. Unit shall be self-contained, stainless steel full load cell floor scale, for high accuracy heavy duty applications, which can be installed in a shallow pit so weight plate is flush with floor. Provide unit with the following features:

1. 100% end loading capacity, to accurately read concentrated loads.

2. Dual gas-shock lift with gentle close system to tilt the platform up 45 degrees, permitting access to the pit area for complete wash down and sanitation.

3. All 304 stainless steel construction.

4. Provide unit with 'Quick Pit Frame' to allow the scale to be mounted in a pit flush with the floor.

5. Hermetically sealed waterproofed electronics and load cells.

6. Impact protected load cells.

B. Accessories:

1. 420 Plus HMI Digital Weight Indicator; UL/SCA approved with the following features:

   a. Zero indicator.
   b. Over capacity.
   c. Under zero display
   d. Zero span adjust
   e. Auto zero verification
   f. Selectable over capacity
   g. Readability: 0.2 LB
   h. Initial/span range
   i. Motion detection.
   j. Automatic zero maintenance.
   k. Display verification.
   l. Pushbutton and keyboard tare weights.
   m. NTEP approved
   n. Stainless steel washdown enclosure

2. Transmission line: Provide transmission line footage as required to span the distance between the scale and indicator within concealed conduit in the floor slab. Conduit provided by Division 26.

3. Enclosure: NEMA 4X stainless steel enclosure; 11.25" high x 13.88" wide x 5.5" deep.

C. Manufacturer shall have at least five years experience in the design, fabrication and construction of floor scales used specifically for morgue use. Scales and indicators shall meet or exceed requirements for Class II, III, or IIII devices.

2.8 STAINLESS STEEL CORNER GUARDS (Key Note **87**): Satin finished. 0.0625-inch (1.6-mm) minimum, stainless steel sheet corner guards; height of 84". Provide 90-degree turn, unless otherwise indicated; and formed edges. All edges shall be rounded with no sharp edges. Provide units covered with paper for temporary protection until corner guards are installed.

A. Wing size: 3 inches x 3 inches (89 mm x 89 mm)
B. Mounting method: Double-faced, self adhesive foam tape, plus flush stainless steel machine screws.
C. Corner radius: 1/8 inch (3.2 mm)
D. Refer to details 8 & 11/L-503.
E. Manufacturers:

1. Bobrick
2. Koroguard
3. Hiawatha

2.9 STAINLESS STEEL WALL GUARDS (Key Note **86**): Satin finished. 0.0625-inch (1.6-mm) minimum, stainless steel sheet wall guards; Provide formed edges. All edges shall be rounded with no sharp edges. Provide units covered with paper for temporary protection until wall guards are installed.

A. Size: 5 1/2 inches x 1 3/4 inches
B. Mounting method: flush stainless steel machine screws. Per details.
C. Corner radius: 1/8 inch (3.2 mm)
D. Refer to detail 6/IL505.
E. Manufacturers:
1. Bobrick
2. Koroguard
3. Hiawatha

2.10 BODY LIFT (Equipment Number **ME10)** Relocate existing lift model Mortuary Lift Ultimate 1000 manufactured by Mortuary Lift Company, 329 10th Ave SE, Suite 213, Cedar Rapids, Iowa 52401.

2.11 BODY FORK LIFT (Equipment Number **ME29)** Hydraulic Cadaver Lift Series M678 as manufactured by Mortech Manufacturing, Azuza, CA, www.mortechmfg.com (phone 800-410-0100), or equal product approved prior to general contractor bid submission.

PART 3 - EXECUTION

3.1 EXAMINATION

A. Verify equipment rough in before proceeding with the work in this section.

B. Coordinate with other trades for the proper and correct installation of plumbing and electrical rough-in, structural backing for items attached to walls, and for rough opening dimensions required for the installation of products in this section.

C. Examine substrate surfaces and associated work and conditions under which work will be installed. Do not proceed until unsatisfactory conditions have been corrected in a manner complying with the Contract Documents and acceptable to the Installer. Starting of work within a particular area will be construed as installer's acceptance of surface conditions.

3.2 INSTALLATION

A. Install in accordance with manufacturer's instructions.

B. Install in accordance with standards required by authority having jurisdiction.

C. Anchor equipment securely in place.

D. Sequence installation to ensure utility connections are achieved in an orderly and expeditious manner.

E. Touch-up minor damaged surfaces caused during installation. Replace damaged components as directed by Architect.

F. Equipment in this section shall be installed with all necessary fittings mounted for final connection by Divisions 22, 23 and 26.

3.3 ADJUSTING

A. Adjust operating equipment to efficient operation for its intended use, and as required by the manufacturer.

B. Make final adjustments to laboratory casework, including doors, drawers, hardware, fixtures and other moving or operating parts to ensure proper and smooth operation.

3.4 CLEANING

A. Clean equipment, casework, countertops and all other surfaces as recommended by the manufacturer, rendering all work in a new and unused appearance. Touch up as required.

B. Clean adjacent construction and surfaces which may have been soiled in the course of installation of work in this section.

C. Clean countertops with diluted dishwashing liquid and water leaving tops free of all grease and streaks. Use no wax or oils.

3.5 PROTECTION OF FINISHED WORK

A. Provide all necessary protective measures to prevent exposure of equipment and surfaces from exposure to other construction activity.

B. Advise contractor of procedures and precautions for protection of material and installed equipment and casework from damage by work of other trades.

3.6 DEMONSTRATION

A. Provide systems demonstration and demonstrate all equipment operations and functions to representatives of the owner.

3.4 DEMONSTRATION

A. Provide systems training and demonstration of all equipment operations and functions, for a duration of at least 8 hours.

B. Refer to Commissioning Specification in Division 1 for training requirements for specific systems and equipment. Training of the Owner's operation and maintenance personnel is required in cooperation with the Commissioning Consultant. Commissioning Specification in Division 1 lists the specific systems and equipment. A training agenda shall be prepared by the Contractor and approved by the Owner prior to training performance

END OF SECTION 11 78 10

SECTION 12 34 50

LABORATORY CASEWORK, FUME HOODS and FIXTURES

PART 1 - GENERAL

1.1 DESCRIPTION

A. Work Included.

1. Furnishing all laboratory cabinets and casework, including lab countertops, lab sinks, ledges, supporting structures, fume hoods, lab service fittings, superglue cabinet, and miscellaneous items of equipment as listed below and in these specifications or equipment schedules including delivery to the building, setting in place, leveling, scribing to walls and floors as required. Furnishing and installing all filler panels, knee space panels and scribes as indicated by drawings. Divisions 22, 23 and 26 shall be responsible for final connections of the laboratory sinks, laboratory fixtures, fume hoods and accessories specified herein.

   a. Fixed Modular Steel Laboratory Casework
   b. Stainless Steel Casework and Countertops
   c. Acid and Flammable Chemical Storage Cabinets

   d. Mobile Tables
   e. Laboratory Countertops (other than stainless steel)
   f. Laboratory Sinks
   g. Laboratory Plumbing, Specialty Gas & Electrical Fittings
   h. Laboratory Casework Accessories
   i. Chemical Fume Hoods (including ADA compliant hoods)
   j. Butcher Paper Dispensers

2. Furnishing and delivery of all utility service outlet accessory fittings as listed in these specifications, equipment schedules or as indicated by drawings as mounted on the laboratory furniture. The above-defined items shall be furnished assembled with supply tank nipples and lock nuts, not attached, loose in boxes and properly marked for delivery to the mechanical contractor (except for prewired or pre-plumbed items such as fume hoods, which are to be delivered completely assembled). All plumbing and electrical fittings will be packaged separately and properly marked for delivery to the appropriate contractor.

3. Furnishing and delivering, packed in boxes for installation by the contractor, all drains, drain troughs, overflows and sink outlets with integral tailpieces, which occur above the floor, and where these items are part of the equipment or listing in the specifications, equipment schedules or indicated by the drawings. Integral tailpieces when required shall be in accordance with the manufacturer's standards. All tailpieces shall be furnished less the

couplings required to connect them to the drain piping system.

4. Furnishing service strip supports where specified, and setting in place service tunnels, service turrets, supporting structures, and reagent racks of the type indicated by the details.

5. Removal of all debris, dirt, and rubbish accumulated as a result of the installation of the laboratory furniture, leaving the premises clean and orderly.

6. Provide holes in counters for purified water fixtures, snorkels and electrical devices required by Divisions 22, 23 and 26.

B. Work Not Included by this Section

1. Equipment, materials, and labor which are the responsibility of other subcontractors, as determined by the General Contractor may include the following:

a. Electrical receptacles, except where integral to casework, pulling of wire and connecting of electrical fittings in service chases and countertop pedestal outlets.

b. Plumbing fittings not included in this section, vacuum breakers (except in-line vacuum breakers specified in this section), piping or other plumbing features, as required meeting local code authority requirements.

c. Furnishing, installing, and connecting of ducts from fume hoods duct collar to fans and from fans to the atmosphere.

d. Furnishing, installing, and connecting of fume hood fans.

e. Furnishing and installing the purified water system that is specified in Division 22 and 23.

1.2 RELATED DOCUMENTS: The completion of the work described in this Section may require work in or coordination with other Sections of these specifications. The Contractor and the subcontractor will be responsible for identifying and including all related work in other Sections of these specifications and/or drawings necessary for a complete installation of the work described in this Section. These related sections include, but are not limited to the following:

A. Drawings and general provisions of Contract, including General and Supplementary Conditions, including Division 1 specifications, apply to this Section.

B. Commissioning: Division 1

C. Refer to Divisions 22, 23 and 26 and the mechanical and electrical drawings for related plumbing, mechanical and electrical work, including plumbing work related to purified water system.

D. Section 11 61 10, Biological Safety Cabinets

E. Division 9: Blocking and backing in walls for anchorage of cabinetry and fume hoods.

F. Division 9: Base molding and flooring.

G. Section 11 47 00, Photographic Equipment

H. Section 11 60 00, Laboratory Equipment

I. Division 23, Laboratory Temperature and Airflow Control System

J. Division 23, Control Instrumentation

K. Division 23, Air Valves

L. Division 23, Direct Digital Control System

M. Division 23, Control & Automation Material

N. Division 23, Sequence of Operation.

O. System commissioning is a part of the construction process. Documentation and testing of systems, as well as training of the Owner's operation and maintenance personnel, is required in cooperation with the Commissioning Consultant. Substantial Completion is dependent on successful completion of all commissioning procedures, documentation, and issue closure. Refer to Commissioning Specification Section for detailed commissioning requirements,

1.3 REFERENCES

A. Laboratory Casework:

1. SAMA Standard Performance Requirements.
2. AWI – Architectural Woodwork Institute
3. SEFA Standard Performance requirements

B. Chemical Fume Hoods:

1. SAMA LF10-80, Laboratory fume hoods.
2. SAMA Standard LFB-1976 Metal Laboratory Furniture
3. NFPA 45, Fire protection for laboratories using chemicals
4. ASTM E-84-98, Surface-burning characteristics of building materials.

5. ASHRAE 110-95, Method of testing performance of laboratory fume hoods (factory testing).
6. ANSI/AIHA Z9.5-1992, Laboratory ventilation
7. AIHA147 EQ 91, AIHA 148 EQ 91
8. ACGIH Pub. 9322 Laboratory Fume Hoods
9. ACGIH Pub 2092 Industrial Ventilation
10. SEFA LF1-1996, Laboratory fume hoods & field testing of fume hoods
11. OSHA 29CFR 1910.1000, Fume hood face velocity
12. UL – Underwriters Laboratories, Inc.
13. UL – Laboratory Equipment
14. SEFA 1.2, Laboratory Fume Hoods
15. SEFA 8, 1999 Metal Laboratory Furniture
13. UL – Underwriters Laboratories, Inc. 1805, Laboratory Fume Hoods
14. D.O.E. US Green Building Council LEED II

C. Flammable Chemical and Acid Storage Cabinets:

1. OSHA Section 1910.106, General Industry Standards.
2. NFPA 30, Flammable and Combustible Liquids Code.
3. UL 1275 Flammable Liquid Storage Cabinets

D. Emergency Eyewash and Shower:

1. ANSI Z-358.1
2. ADA

1.4 SUBMITTALS

A. Submit under provisions of Division 1, General Requirements.

B. Shop Drawings: Provide 1 original reproducible set, 1/2”=1’=0” scale elevations and 1/4”=1’-0” plans of casework, fume hoods and equipment locations, showing cross sections, details, rough-in and anchor placement dimensions and tolerances and clearances required. Indicate relation to surrounding walls, ceilings, windows, doors and other building components. Show rough-in requirements. Show locations of all required framing, bucks, metal grounds, or reinforcements in walls, floors and ceilings to adequately support the laboratory casework, equipment and for proper anchoring and support. Additionally, provide a keying schedule for all cabinet locks. Provide an additional 2 sets of copies, over and above the required number of copies for A/E review, for review by the Owner.

C. Product Data: Provide manufacturer's technical data for each component and item of laboratory casework and equipment specified, including equipment dimensions and construction, configurations, color selection charts, attachment and anchorage details, equipment capacities, physical dimensions, construction details, utility and service requirements and locations, point loads and factory finishes.

1. Manufacturer's Installation Instructions; Indicate special installation requirements.

2. Seismic Restraints: The lab casework and fume hood manufacturer/installer shall install the casework and fume hoods to resist seismic loading as required by the local governing codes. Provide all seismic details with lab casework and fume hood submittals indicating required wall construction such as wall stud size and gauge, point loads, etc. Install all anchorage devices, including special legs and or braces, required for seismic restraint of lab casework, fume hoods and accessories to satisfy all governing code requirements for seismic anchorage of equipment.

3. Instruction: Submit for review and approval written approval instructions in booklet form providing additional details on safe operation and maintenance.

D. Samples: Provide the following samples:
1. Finish Samples: Submit 5 sets of samples of each color of finish for casework, fume hoods, work surfaces and other prefinished work as well as accessories for selection by interior designer.

2. Door and Drawer Samples: Provide a complete finished door unit, 12” wide, and a complete drawer unit, 12” wide, with finished drawer front and slides attached.

3. Hardware Samples: Provide 2 sets of all hardware components, with one set installed on the samples required in item 2.

4. 4” x 14” countertop samples.

E. Test Data & Reports: Submit 5 sets of test reports on each size and type of hood, and other specified items, verifying conformance to test performance specified. This information shall be spiral bound in a separate document submitted with the other operational and maintenance documents. Test report must accompany each hood as part of installation and usage package.

1. Submit independent factory test reports in accordance with ASHRAE 110-95 and field-testing in accordance with SEFA LF1-1998. The minimum overall performance rating of each test shall be 4.0 AM 0.05 with 4.0 liters per minute of tracer gas release, AM identifying a ‘as manufacturer’ test, and 0.05 indicating the level of tracer gas control in parts per million.

2. Submit detailed seismic anchorage and attachment drawings and calculations provided by a licensed structural engineer, licensed in the state of the project, complying with all building code requirements and regulations for seismic restraint.

F. Instructions: Submit for review and approval:

1. Instructions to be inscribed on instruction plate to be attached to hood, as specified in part 2 of this section.

2. Written instructions in booklet form providing additional details on safe and proper operation and maintenance of fume hoods and other equipment.

3. Professional quality video - minimum 15 minutes in length on proper hood usage.

4. Testing procedures to be used in the factory and field-testing of fume hoods.

1.5 OPERATION AND MAINTENANCE DATA

A. Submit information in bound manual form, type written or computer word processed on 8-1/2" x 11" paper.

B. Operation Data: Include description of required operation, adjusting and testing.

C. Maintenance Data: Identify system maintenance requirements, servicing cycles and spare part sources.

1.6 QUALITY ASSURANCE

A. Single source responsibility: Laboratory furniture system, casework, work surfaces, fume hoods, laboratory equipment and accessories shall be manufactured or furnished by a single laboratory furniture company.

B. Manufacturer's qualifications: Modern plant with proper tools, dies, fixtures and skilled workmen to produced high quality laboratory casework and equipment. Installers shall be factory certified by the manufacturers.

C. Coordination drawings: The supplier/installer shall coordinate the installation of all products under this section, including mechanical, plumbing and electrical items, which are provided by the supplier and installed by other contractors. Laboratory casework/fume hood manufacturer shall be responsible for generating layout drawings and distributing them to the mechanical, electrical and plumbing contractors for coordination and accurate locations of cutouts and service connections required by each discipline, prior to generating final shop drawings.

D. Owner has the right to inspect equipment at the manufacturer's factory prior to shipment. Equipment found not to be in conformance with requirements of the contract documents might be rejected.

E. Installer’s qualifications: Installer shall be factory certified by the manufacturer.

F. Performance requirements: Structural performance requirements: Casework components shall withstand the following minimum loads without damage to the component or to the casework operation:
   1. Steel base unit load capacity: 500 lbs. per lineal foot.
   2. Suspended units: 300 lbs.
   3. Drawers in a cabinet: 150 lbs.
   4. Utility tables (4 legged): 300 lbs (12 sf in table area or less); 500 lbs (over 12 sf in table area)
   5. Hanging wall cases: 300 lbs.
   6. Load capacity for shelves of base units, wall cases and tall cases: 40 lbs. per square foot.

1.7 DELIVERY, STORAGE AND HANDLING

A. Deliver, store, protect and handle products on the site in such a manner as to minimize the risk of damage, decay, deterioration or loss from theft.

B. All products shall be delivered to the job site in manufacturer's original unopened containers, crates or protective wrappings with the manufacturer's name and address clearly labeled thereon.

C. Accept products on site and inspect on arrival for damage.

D. Protect products from damage and soiling at all times. Keep products covered with polyethylene film or other suitable protective coverings. Protect installed casework throughout construction period with corrugated cardboard completely covering the top and securely taped to edges. Mark cardboard in large lettering “No Standing”.

1.8 PROJECT CONDITIONS

A. Do not deliver or install laboratory casework until building is secure and weather tight, all painting is completed and ceilings, overhead ductwork and lighting are installed, and HVAC systems are operational and capable of maintaining the building temperature and humidity at occupancy levels throughout the remainder of the construction period.

1.9 FIELD MEASUREMENTS

A. Verify field measurements shown on shop drawings or as instructed by manufacturer.

1.10 WARRANTY

A. Provide warranty under provisions of Division 1.

1.11 EXTRA STOCK/ SPARE PARTS

A. Provide the following spare parts delivered to the owner in unopened boxes:

1. One change of lamps and ballast for each size of light in all fume hoods and in each of the superglue chambers.

2. Three safety monitors and all associated wiring components.

3. Needle valves (laboratory compressed air and vacuum service fittings) and fine control needle valves (5.0 ultra-high purity laboratory instrument gas service fittings), in quantities as indicated in their respective sections.

PART 2 - PRODUCTS

2.1 ACCEPTABLE PRODUCTS

A. Subject to compliance with these specifications, acceptable products include, but are not limited to, those manufactured and provided by the following companies. While this specification is based on Kewaunee, products by other listed manufacturers are considered equals provided they meet the standard of design and quality for materials, construction and workmanship as described in this specification.

B. Fixed Lab Casework & Flexible Lab Casework

1. **Kewaunee Scientific Corporation**:
   • Flexible Lab Casework System: Alpha 2000, w/ suspended upper cabinets
   • Fixed Steel Lab Casework System: Full Flush Overlay

2. **Mott Manufacturing**
   • Flexible Lab Casework System: Optima 1500 w/ suspended upper cabinets
   • Fixed Steel Lab Casework System: Full Flush Overlay Design

3. **Bedcolab:**
   • Flexible Lab Casework System: Allegro, w/ suspended upper cabinets
   • Fixed Steel Lab Casework System: Forte Flush Overlay Design

4. **Jamestown Metal Products:**
   • Flexible Lab Casework System: Flexcore, w/ suspended upper cabinets
   • Fixed Steel Lab Casework System: Dimension Series Flush Overlay

C. Fume Hoods

1. **Kewaunee Scientific Corporation**

2. **Mott Manufacturing**

3. **Bedcolab**

4. **Labconco**

D. Fixtures:

1. Watersaver Faucet Company
2. T&S Brass
3. Chicago Faucet

2.2 HARDWARE

A. Hardware and Trim

1. Drawer and Door Pulls: Drawer and door pulls shall be modern design, offering a comfortable handgrip, and be securely fastened to doors and drawers. Two pulls shall be required on all drawers over 24” long. Pull to be 5/16” stainless steel wire style, 4” wide.

2. Flush Pulls: Flush pulls for sliding doors shall be satin finish stainless steel, providing a recessed finger grip. Finger holes or slots machined into doors will not be acceptable.

3. Hinges: Hinges shall be the five (5) knuckle institutional, offset type for all swinging doors. Hinges shall be 2-3/4” long, one (1) pair for doors less than 4 ft. in height and 1-1/2 pair on doors over 4 ft. in height. Hinges are mounted with flathead screws, so applied to door and cabinet to withstand a weight load of 150 lbs. minimum. All hinges shall be satin finish stainless steel.

4. Locks: 5-pin locking system, heavy-duty cylinder type, capable of 75 pure key changes (unique keys) with master keyed system determined by Owner, heavy-duty cylinder type. Exposed lock noses shall be dull nickel (satin) plated and stamped with identifying numbers. Locks shall have capacity for 225 primary key changes. Master key one level with the potential of 40 different, non-interchangeable master key groups. The contractor shall prepare a keying schedule based on the Owner’s requirements for all cabinetry locks. The keying schedule shall incorporate the following general requirements:

   a) Evidence rooms: Each cabinet to be uniquely keyed and master keyed.
   b) Lab spaces: Each cabinet with a lock shall be uniquely keyed and master keyed by laboratory unit. (Multiple locking drawers and doors within a single cabinet should be keyed alike.)
   c) Keys: Stamped brass available from manufacturer or local locksmith, and supplied in the following quantities unless otherwise specified:

      2 - for each keyed different lock.
      3 - for each group keyed alike locks.
      2 - for master keys for each system.

5. Roller Catches: Roller catches shall be used on swinging doors. Catches shall have a spring-loaded polyethylene roller and provided with a steel strike plate. Double doors without locks shall have a catch on each door. Full height cases shall have latching devices located on the structurally fixed center shelf. The left-hand door shall have a positive catch and the right hand door shall have the roller type catch.

6. Elbow Catches: When locks are specified, elbow catches shall be utilized. Elbow catches and strike plates shall be used on left hand doors of double door cases ad are to be case aluminum with bronze finish.

7. Leg Shoes: Leg shoes shall be provided on all table legs, unless otherwise specified, to conceal leveling device. Shoes shall be 1-1/2” high and a pliable, black vinyl material. Use of a leg shoe, which does not conceal leveling device, will not be acceptable.

8. Floor Glides: Floor glides, where specified for movable open-leg tables, shall be a non-marring material at least 1” diameter to prevent indenting composition flooring and shall have at least a 5/8” height adjustment. Use of metal buttons will not be acceptable.

9. Dowels used to join frames and panels shall be fluted hardwood not less than 3/8” in diameter.

10. Shelf Support Clips: Shelf Support Clips shall be double pin type for mounting on interior of cabinetwork. Clips shall be corrosion resistant and shall retain shelves from accidental removal. Shelves are adjustable on 32mm centers. Surface mounted metal support strips and clips subject to corrosion are not acceptable.

11. Drawer suspension: Mechanical slides shall be:

    a) Drawer Suspension: Drawer slides shall be as made by Accuride or approved equal approved prior to bid with a standard clear zinc finish.

        1. Light duty, 24” wide or less: Accuride 3834 all ball bearing, rail mount, full extension + 1” over travel slides, hold open detent with a 100 lb./ pair load rating.

        2. Medium duty, 33.5” wide or less: Accuride 7434 all ball bearing, rail mount, full extension + 1” over travel slides, hold open detent with a 100 lb./ pair load rating and progressive movement.

        3. Heavy duty 42” wide or less: Accuride 3640 all ball bearing, rail mount, full extension + 1” over travel slides, hold open detent with a 200 lb./ pair load rating and sequential movement.

b) File drawers to be equipped with full extension with over-travel 150 lb. dynamic zinc plated Accuride 4034 series, or equal.

12. Label Holders: Furnish and install label holders on each drawer and each hinged casework door. Label holders shall be Kewaunee part number F-0260-00 (Aluminum) or approved equal.

13. Seismic Lips: Furnish 3/16” x 2” clear Plexiglas (acrylic) lips at all open shelves other than the metal shelves.

2.3 FIXED MODULAR STEEL LABORATORY CASEWORK

A. Casework Design Requirements:

1. Full flush overlay steel construction.

2. Slim line styling: Maximum front width of end panels 3/4 inch and maximum front height of top and bottom members 1 inch.

3. Self-supporting units: Completely welded shell assembly without applied panels at ends, backs or bottoms, so that cases can be used interchangeably or as a single, stand-alone unit

4. Interior of case units: Easily cleanable, flush interior. Base cabinets, 30" and wider, with double swinging doors shall provide full access to complete interior without center vertical post.

5. Drawers: Sized on a modular basis for interchange to meet varying storage needs, and designed to be easily removable in field without use of special tools.

6. Case openings: Rabbeted-like joints all four sides of case opening for hinged doors and two sides for sliding doors in order to provide dust resistant case.

7. Framed glazed doors: Identical in construction, hardware and installation to solid panel doors. Design frame glazed doors to be removable for glass replacement.

8. Fillers, scribes and closures: Provide and install as necessary for a complete installation.

B. Casework Performance Requirements:

1. Structural performance requirements: Casework components shall withstand the following minimum loads without damage to the component or to the casework operation:

a. Steel base unit load capacity: 500 lbs. per lineal foot.
b. Suspended units: 300 lbs.
c. Drawers in a cabinet: 150 lbs.
d. Utility tables (4 legged): 300 lbs.
e. Hanging wall cases: 300 lbs.
f. Load capacity for shelves of base units, wall cases and tall cases: 180 lbs.

2. Metal Finish Performance Requirements:

a. Abrasion resistance: Maximum weight loss of 5.5 mg. per 100 cycle when tested on a Taber Abrasion Tester #E40101 with 1000 gm wheel pressure and Calibrase #CS10 wheel.

b. Hardness: Surface hardness equivalent to 4H or 5H pencil.

c. Humidity resistance: Withstand 1000-hour exposure in saturated humidity at 100 degree F.

d. Moisture resistance:

(1) No visible effect to surface finish after boiling water trickled over test panel inclined at 45 degrees for five minutes.
(2) No visible effect to surface finish following 100-hour continuous application of a water soaked cellulose sponge, maintained in a wet condition throughout the test period.

e. Adhesion: Score finish surface of test panel with razor blade into 100 squares, 1/16" x 1/16", cutting completely through the finish but with minimum penetration of the substrate, and brush away particles with soft brush. Minimum 95 squares shall maintain their finish.

f. Salt spray: Withstand minimum 200-hour salt spray test.

C. Chemical Resistance Finish Performance Requirements:

1. Test procedure: Apply 10 drops (approximately 0.5 cc) of each reagent identified to the surface of the finished test panels laid flat and level on a horizontal surface. Ambient temperature: 68-72 deg F. (20-22 deg C.). After one hour flush away chemicals with cold water and wash surface with detergent and warm water at 150 deg F. (65.5 deg C.) and with alcohol to remove surface stains. Examine surface under 100 foot-candles of illumination.

2. Evaluation ratings: Change in surface finish and function shall be described by the following ratings:

a. Excellent: Indicates excellent to superior integrity of finish film. Includes no effect of slight change in gloss and slight discoloration.
b. Good: Clearly discernible change in color or gloss. Finish remains intact and protective with no significant impairment to function or life.
c. Failure: Obvious and significant deterioration, visible blistering, pitting, bare spots, or roughness of surface.

3. Test results (concentration by weight):

	REAGENT	RATING
a.	Acetic Acid, 93%	Excellent
b.	Formic Acid, 33%	Good
c.	Hydrochloric Acid, 37%	Excellent
d.	Nitric Acid, 25%	Excellent
e.	Nitric Acid, 60%	Good
f.	Phosphoric Acid, 75%	Excellent
g.	Sulfuric Acid, 28%	Excellent
h.	Sulfuric Acid, 85%	Excellent
i.	Ammonium Hydroxide, 10%	Excellent
j.	Sodium Hydroxide, 10%	Excellent
k.	Sodium Hydroxide, 25%	Excellent
l.	Acetone	Excellent
m.	Carbon Tetrachloride	Excellent
n.	Ethyl Acetate	Excellent
o.	Ethyl Alcohol	Excellent
p.	Ethyl Ether	Excellent
q.	Formaldehyde, 37%	Excellent
r.	Hydrogen Peroxide, 5%	Excellent
s.	Methylethyl Ketone	Excellent
t.	Phenol, 85%	Good
u.	Xylene	Excellent]

4. Finish drawer bodies in matching or harmonizing color and apply corrosion-resistant treatment to selected, concealed interior parts.

5. Provide independent certified test report on chemical resistant finish.

D. Casework Materials

1. Sheet steel: Mild, cold rolled and leveled unfinished steel.

2. Minimum gauges:

a. 20 gauge: Interior drawer fronts, scribing strips, filler panels, enclosures, drawer bodies, drawer bodies, shelves, security panels and sloping tops.

b. 18 gauge: Case tops, ends, bottoms, bases, backs, vertical posts, uprights, glazed door members, door exterior panels, filler panels, and access panels.

c. 16 gauge: Top front rails, top rear gussets, intermediate horizontal rails, table legs and frames, leg rails and stretchers.

d. 14 gauge: Drawer suspensions, door and case hinge reinforcements and front corner reinforcements.

e. 11 gauge: Table leg corner brackets and gussets for leveling screws.

3. Glass for glazed doors: 1/4" (6mm) thick clear tempered safety glass.

E. Casework Fabrication:

1. Base Units and Cases:

a. Base units and 25", 31" and 37" high wall cases: One piece end panels and back, wrap-around design, reinforced with internal reinforcing front and rear posts. Base units shall be 22” overall in depth.

b. 49" and 84" high cases: Formed end panels with front and rear reinforcing post channels; back shall be formed steel panel, recessed 3/4" for mounting purposes.

c. Posts: Front post fully closed with full height reinforcing upright. Shelf adjustment holes in front and rear posts shall be perfectly aligned for level setting, adjustable to 1/2" o.c.

d. Secure intersection of case members with spot and arc welds. Provide gusset reinforcement at front corners.

e. Base unit backs: Provide drawer units without backs and cupboard units with removable backs for access to services behind unit.

f. Bottoms: Base units and 25", 31", 37" and 49" high wall cases shall have one piece bottom with front edge formed into front rail, rabbeted as required for swinging doors and drawers and flush design for sliding doors.

g. Top rail for base units: Interlock with end panels, flush with front of unit.

h. Horizontal intermediate rails: Recessed behind doors and drawer fronts; removable for later revision in cabinet configuration.

i. Base for base units: 4" high x 3" deep with formed steel base and 11 Ga. die formed steel gussets at corners. Provide 3/8" diameter leveling screw with integral bottom flange of minimum 0.56 sq. in. area at each corner, accessible through openings in toe space.

j. Tops of wall cases: One piece, with front edge formed into front rail.

k. Vertical service cores: Provide manufacturer's standard service core matching adjacent wood laboratory casework in color and finish. Coordinate free area within service core with related disciplines.

2. Drawers:

a. Drawer fronts: 3/4", double wall construction, pre-painted prior to assembly and sound deadened; top front corners welded and ground smooth.

b. Drawer bodies: Bottom and sides formed into one-piece construction with bottom and sides coved and formed top edges.

c. Provide drawer with rubber bumpers. Friction centering devices are not acceptable. Provide security panels for drawers with keyed different locks.

d. File drawers: Provide with full extension slides for full access and operation. Provide all file support inserts.

3. Doors:

a. Solid panel doors: 3/4" thick, double wall, telescoping box steel construction with interior pre-painted and sound deadened, all outer corners welded and ground smooth. Reinforce interior of front panel with welded steel hat channels. Secure hinges with screws to internal 14 gauge reinforcing in case and door. Hinges shall be removable; welding of hinges is not acceptable. Doors shall close against rubber bumpers.

b. Frame glazed doors: Outer head shall be one-piece construction. Inner head shall consist of top, bottom and side framing members, which are removable for installation or replacement of glass. Provide continuous vinyl glazing retainer to receive glass. In all other respects, framed glazed door construction and quality shall match solid panel doors.

c. Sliding doors, solid or framed glazed: Design for tilt-out removal after removal of bottom guide. Doors shall be hung with nylon tired sleeve bearing rollers in formed steel top hung track and shall close against rubber bumpers.

d. Unframed sliding glass doors: Glass with edges ground set in extruded aluminum shoe with integral pulls, wheel assemblies and top and bottom extruded aluminum track. Provide rubber bumpers at fully opened and closed-door position.

4. Shelves:

a. Form front and back edges down and back 3/4". Form end down 3/4". Reinforce shelves over 36" long with welded hat channel reinforcement the full width of shelf.

b. Pullout shelves: Full extension slide.

c. All open shelving to have seismic lip edge restrains.

F. Support Frames:

A. General requirements for core type support structures:

1. Riser uprights: 6" wide 16 gauge cold rolled steel supplied with leveling guides.

2. Slotted adjustment punched into riser upright: notched for one-inch adjustment of components supported off riser upright.

3. Frames: Cold rolled steel, resistance welded. Frame members and tie rail brackets: 16 gauge; corner gussets: 14 gauge.

4. Base rails: 16 gauge.

5. Top Rail Assembly: 16 gauge Top Rail; 18 gauge Reinforcement Channel

6. Intermediate Cross Rails: 16 gauge.

7. Closure panels: 20 gauge cold rolled steel.

8. Closure panel fasteners: "Duallock".

9. Adjustable floor clamps: Two per frame; 11 gauge cold rolled steel.

10. Plug caps: ABS flame retardant plastic, color matched.

B. Structural Utility Frame (Alpha system):

1. Nominal dimensions:
   a. Width: [24"] [30"] [36"] [48"] [60"] [72"].
   b. Depth: 6".

c. Height: 84" to 120" with telescoping vertical riser.

2. Service area: Minimum (two each 3" x 8"; above 36" work height, two each 4" x 8" horizontal utility chase below 36" work height) between uprights and tie rails for service installation.

3. Floor clamps: 11 gauge cold rolled steel, supplied with one rawl bolt for concrete floor anchorage.

4. Frame shall be capable of anchoring to the floor, and/or anchored to the base cabinets, and attaching to the ceiling grid at various heights, with infinite adjustment, with 2 (two) telescoping riser extensions:

   Short riser extension: 7'9" to 9'3"

5. Frame, when secured to floor and ceiling grid, or building structure, shall be capable of supporting worst-case loading conditions without end riggers.

6. Hanging components (cantilever table frames, wall cases, shelves, etc.) shall be vertically adjustable in 1" increments.

7. Closure panels shall snap on without tools and shall be removable without removal of cantilever table frames or suspended cabinetry.

8. Installed 84" high core shall support following components, each loaded to its maximum rating for a total of 2,280 lbs. (evenly balanced on both sides).

   a. Outside shelves - 6", 8", 12" - 180 lbs.; 18" - 130 lbs.; 24" - 100 lbs.
   b. Wall cases - 300 lbs.
   c. Two cantilever work surfaces - 600 lbs. each side.

9. Ceiling Channel:

   a. Bottom ceiling channel shall be manufactured from 20 gauge cold rolled steel to provide a positive means of attachment to the ceiling T-grid system and/or solid ceiling deck and the telescoping vertical riser.

   b. Upper Ceiling channel (suspended ceiling only) shall be manufactured from 18 gauge galvanized steel. Ceiling panel shall be sandwiched between the upper and lower channel and shall be drilled with self-tapping screws to provide a semi-permanent, secured, non-skidding ceiling attachment.

2.4 SUSPENDED STAINLESS STEEL CASEWORK, TOPS & SHELVING

A. General: **ALL AUTOPSY CASEWORK TO BE STAINLESS STEEL**

1. Provide stainless steel casework where shown on the drawings and as specified herein. Cabinets shall be constructed as cantilevered, independent cases. Only tall cabinets rest on the floor.

2. Flush construction: Surfaces of doors, drawers and panel faces shall align with cabinet fronts without overlap of case ends, top or bottom rails. Horizontal and vertical case shell members (panels, top rails and bottoms) shall meet in the same plane without overlap, cracks or crevices.

3. Slimline styling: Front width of end panels 3/4" and front height of top and bottom members 1".

4. Self-supporting units: Completely welded shell assembly without applied panels at ends, backs or bottoms, so that cases can be used interchangeably or as a single, stand-alone unit.

5. Interior of case units: Easily cleanable, flush interior. Base cabinets, 30" and wider, with double swinging doors shall provide full access to complete interior without center vertical post.

6. Drawers: Sized on a modular basis for interchange to meet varying storage needs, and designed to be easily removable in field without the use of special tools.

7. Case openings: Rabbeted-like joints all four sides of case opening for hinged doors and two sides for sliding doors in order to provide dust resistant case.

8. Framed glazed doors: Identical in construction, hardware and installation to solid panel doors. Design frame glazed doors to be removable for glass replacement.

B. Casework Materials:

1. Sheet steel: Mild, cold rolled and leveled #304 stainless steel. (#4 polished sheen on all exposed surfaces)

2. Minimum gauges:
   a. 20 gauge: Solid door interior panels, drawer fronts, scribing strips, filler panels, enclosures, drawer bodies, shelves, security panels and sloping tops.
   b. 18 gauge: Case tops, ends, bottoms, bases, backs, vertical posts, uprights, glazed door members, door exterior panels and access panels.
   c. 16 gauge: Top front rails, top rear gussets, intermediate horizontal rails, table legs and frames, leg rails and stretchers.
   d. 14 gauge: Drawer suspensions, door and case hinge reinforcements and front corner reinforcements.

e. 11 gauge: Table leg corner brackets and gussets for leveling screws.
f. Glass for glazed swinging and sliding doors: 1/8" (3mm) framed doors, 7/32" (6mm) unframed doors thick, clear tempered glass.

C. Casework Fabrication:

1. Base Units and Cases:
   a. Standard height base units: End panels and back reinforced with internal reinforcing front and rear posts.
   b. Tall cases: Formed end panels with front and rear reinforcing post channels; back shall be formed stainless steel panel, recessed 3/4" for mounting purposes.
   c. Posts: Front post fully closed with full height reinforcing upright. Shelf adjustment holes in front and rear posts shall be perfectly aligned for level setting, adjustable to 1/2" o.c.
   d. Secure intersection of case members with spot and arc welds. Provide gusset reinforcement at front corners.
   e. Base unit backs: Provide drawer units without backs and cupboard units with removable backs for access to services behind units.
   f. Bottoms: Base units and wall cases shall have one piece bottom with front edge formed into front rail, rabbeted as required for swinging doors and drawers and flush design for sliding doors.
   g. Top rail for base units: Interlock with end panels, flush with front of unit.
   h. Horizontal intermediate rails: Recessed behind doors and drawer fronts.
   i. Base for base units: 4" high x 3" deep with formed steel base and 11 ga. die formed stainless steel gussets at corners. Provide 3/8" diameter leveling screw with integral bottom flange of minimum 0.56 sq. in. area at each corner, accessible through openings in toe space.

   j. Tops of wall cases: One piece, with front edge formed into front rail.
   k. Wall Cabinets shall have corner gussets providing reinforcing support and containing shelf clip adjustments slots. Shelving supported by the clips mounted to holes in the rear (back) of the wall cabinet are not allowed.
   l. Suspended cabinets are manufactured from one piece, full wrap around steel construction. Welded panel construction is not acceptable. Rear panels must be solid and not perforated for suspending shelves.

2. Drawers:
   a. Drawer fronts: 3/4" thick, double wall construction, sound deadened.
   b. Drawer bodies: Bottom and sides formed into one-piece center section with bottom and sides coved and formed top edges. Front and back panels spot welded to center section.
   c. Provide drawer with rubber bumpers. Friction centering devices are not acceptable.

d. Provide security panels for drawers with keyed different locks.
e. File drawers: Provide with 150# full extension slides for full access and operation.

3. Doors:
   a. Solid panel doors: 3/4" thick, double wall, telescoping box stainless steel construction with interior polished and sound deadened, top corners welded and ground smooth. Reinforce interior of front panel with welded stainless steel hat channels. Hinges with screws to internal 14 gauge reinforcing in case and door. Hinges shall be removable; welding of hinges not acceptable. Doors shall close against rubber bumpers.
   b. Frame glazed doors: Outer head to be one piece construction. Inner head to consist of top, bottom and side framing members which are removable for installation or replacement of glass. Provide continuous vinyl glazing retainer to receive glass. In all other respects, framed glazed door construction and quality shall match solid panel doors.

4. Shelves:
   a. Form front and back edges down and back 3/4". Form ends down 3/4".
   b. Reinforce shelves over 36" long with welded hat channel reinforcement the full width of shelf.
   c. Pull out shelves: Same suspension as specified for drawers.

5. Structural Cantilevered Support frames:
   a. 1” steel standard frame with a minimum load capacity of 400 lbs per frame.
   b. Vertical support frame members shall be surface attached to the wall system designed by a licensed structural engineer.
   c. Vertical supports shall be spaced no greater than 24” apart and shall not be visible.
   d. Vertical support frames may not be visible from the front casework elevation.

6. Base molding: Integral base by flooring contractor where casework may rest on floor.

D. Stainless Steel Worksurface:

1. Material: 14 gauge, type 304 stainless steel with No. 4 polished finish on all exposed surfaces and edges. Form tops with one inch lip and 1/2" return flange, and provide 16 gauge steel reinforcing channels applied to underside as required for rigidity and sound dampening. Form edges, flanges and curbs integrally with top from one sheet of metal.

2. Tops: Form tops with 1” lip and 1/2" return flange, die formed 3/16" high integral marine edges and provide 16 gauge stainless steel reinforcing

channels applied to underside as required for rigidity and sound dampening. Form edges, flanges and curbs integrally with top, from one sheet of metal.

3. Sink tops: Provide seamless, die formed 3/16" high integral marine edges at sink tops. Unless otherwise noted, provide plain edges at all other tops. Coat underside of all with sound dampening material.

4. Sink bowls: All sink bowls are made from 16 gauge Type 304 stainless steel. Electrically weld stainless steel bowls to opening in top. Grind welds flush and polish to a satin finish to produce an integral unit with invisible joint line. Cover underside of sink bowls with sound dampening material.

5. Joints: Electrically weld all shop joints; grind smooth and polish. Design field joints to be mechanically bolted and supported full length, resulting in a hair line seam with flat, level surfaces each side of joint.

4. Sound dampening material: Material shall be waterborne and non-flammable in its liquid state. Material to contain clay, which will act as a flame retardant. Material shall contain no volatile organic compounds (VOC). Film thickness of spray-applied product shall be approximately 20 mil.

E. Shelving & rod:

1. Shelving in cabinets: Shall be adjustable on 2" centers minimum over the full height of the cabinet, and shall be provided with channel shaped and flanged edges on all four sides for strength.

2. Independent shelving: Stainless Steel Shelving: Stainless Steel Shelving: Smart Track system model SMS series as manufactured by InterMetro Industries Corporation, Wilkes Barre, PA 18705. Super Erecta wire, single 21” shelf width, direct mounted (wall), catalog number IWD21S, all components to be stainless steel.

3. Stainless steel rod shall be a 1.25” diameter stainless steel rod, anchored to wall on both sides with stainless steel holder.

2.5 LABORATORY EPOXY DRYING RACKS (PEGBOARDS) (**KN 6**)

A. Drying Racks:

1. Board: Epoxy resin board finished on face and edges. Where exposed, finish back with slightly different surface texture and bevel bottom edges.

2. Pegs: Polypropylene pegs in 5", 6-1/2" and 8" lengths, with glassware protector base. Base of pegs shall be two-prong style for mechanical attachment. Do not bond pegs to board.

3. Drip Trough: Provide with drip trough the full width of the base of pegboard unit, with drain hole fitted with rubber tubing to laboratory sink.

4. Size and Quantity of Pegs:

   a. At single sinks: 24"W x 30"H with approximately 35 pegs.
   b. At double sinks: 30"W x 30"H with approximately 50 pegs.

5. Color: Match adjacent epoxy resin countertops.

6. Location: Locate the drying racks to avoid conflicts with deck mounted eyewash units. The drying rack shall be no closer than 14” from the eyewash unit.

2.6 MOBILE CABINETS (**MCx-y**)

A. Cabinets with casters shall be constructed without toe spaces. The cabinet shall be constructed with a reinforced base capable of supporting a 2.5” high caster assembly in each corner. Casters shall be swivel locking type and rated for minimum 250 pounds load each. Cabinets with casters shall be completely finished on four sides and top since surfaces are considered visible.

B. The entire cabinet assembly shall be reinforced to permit mobility without flexing or twisting.

C. Each mobile cabinet shall be provided with a 1” epoxy counter top to match the lab epoxy counter color and finish. The counter shall overhand the mobile cabinet by 3/4” all the way around.

D. Base cabinets shall incorporate a flush overlay design in which the cabinet body is completely concealed by door and drawer fronts.

E. Units with drawers must be equipped with an anti-tipping mechanism that shall include an interlock so that only one drawer in a vertical stack can be opened at one time.

F. Provide corner & surface guards with metal insert on sides and back of all mobile cabinets, at both the top and bottom of the mobile cabinet. Provide corner & surface guards by McMaster-Carr, as follows:

   1. Corner Guards: At 2 rear corners, top and bottom: Black, wrap around corner guard model No. 11165A441
   2. Surface Guards: At 2 sides: Black, surface guards, model No. 11165A581, to match profile of rear corner guards and front end caps, extending from rear corner guard to front end cap.
   3. End caps: At 2 front edges of cabinet: Black end cap, model No. 11165A461

2.7 MOBILE TABLES

A. Tables: Mobile, adjustable height table configurations:

1. General requirements for tables:

   a. Work surface support frame: 11 gauge cold rolled steel tubing. Cabinet support channels: 14-gauge cold rolled steel. Weld members using the inert gas process.

   b. Support arms:

      1. Cantilever support arms: 11-gauge cold rolled steel.

      2. 4 leg adjustable height support arms: 11-gauge cold rolled steel.

   c. End caps: Flame resistant ABS plastic, color matched.

2. Finish: Chemical resistant powder paint finish in manufacturer's standard color to be selected and coordinated with interior designer.

3. Design: The mobile table design is indicated in the drawings.

4. Location: Locations of mobile tables are indicated in the drawings.

5. Mobile Adjustable Height Table Construction:

   a. Freestanding table capable of supporting suspended base cabinets. Rectangular and 90 corner configurations.

   b. Structural modesty panel: Box construction of 18-gauge cold rolled steel.

   c. Leg upright: 16-gauge cold rolled steel.

   d. Feet: Die cast aluminum.

   e. Table weight: Maximum weight of table assembly: 400 pounds

   f. Design weight capacity: Table weight plus 600 lbs.

   g. Tables include four-leg, structural and extended frame configurations.

   h. Provide mobile tables with 4 - 6” diameter, swiveling rubber wheels, each
   having foot operated locking mechanisms.

3. Table Frames

a. Table Frames: 4-1/2” high “C” channel front and back aprons, end rails and cross rails.

b. Table drawers: Provide front and back rails; drawer unit, hardware and suspension same as specified for base unit drawers.

c. Legs: 1-1/2” x 1-1/2” steel tube legs with welded leg bracket. Attach legs with two bolts to front and back aprons and weld to end rails. Provide adjustable height legs to enable the table height to be placed at heights ranging from 28” to 36” at maximum of 2” increments.

d. Knee space frames: 2” high apron where no drawers required (shall satisfy ADA requirements for undercounter clearance at 32” high countertops).

e. Leg rails and stretchers: channel formed.

2.8 FLAMMABLE CHEMICAL AND ACID STORAGE CABINETS:

A. General:

1. Applicable to freestanding cabinets where shown, and cabinets beneath fume hoods.

2. Flammable Chemical Storage Cabinet Performance Requirements shall be as previously noted for painted steel casework.

a. Maximum internal temperature: 325 degrees F., when subjected to a 10 minute fire test using standard time-temperature curve per ASTM E152-72 (Article 42, NFPA No. 30).

b. Reference Standards:

1. OSHA General Industry Standards Section 1910.106.

2. NFPA Flammable and Combustible Liquid Code No. 30.

3. Cabinets shall be Factory Mutual (FM) approved.

B. Acid Storage Cabinets: Acid Storage Cabinets shall utilize the same materials and construction features as other base cabinets, i.e. wood fronts where next to wood casework and stainless steel fronts when next to stainless steel casework. In addition, they shall have a one-piece liner insert made of linear low-density polyethylene that covers the entire inside surface of the cabinet. The liner insert shall be one-piece and form an integral one and one-half inch high pan at the bottom to retain spillage, except provide an easily removable 8” x 8” access panel in the back wall to gain access to the service chase

behind the acid cabinet. Pieced installations are not acceptable. The door shall be lined with a polyethylene sheet. Each cabinet shall be vented with a 2” threaded vent connection pipe on the back of the cabinet for supply and exhaust ventilation air. Label cabinet: "ACID STORAGE".

1. Acid cabinets located under fume hoods shall be equipped with ventilation kits providing positive ventilation from the cabinet, bypassing the interior of the fume hood between the liner and the steel housing, and connecting directly to the exhaust duct transition piece above the fume hood or where indicated by the mechanical drawings.

2. Acid storage cabinets installed independent of fume hoods shall be provided with individual exhaust vents to be run to the exterior through the roof of the building to an exhaust fan. Ductwork and fan shall be by HVAC ductwork installer (Division 23).
3. Undercounter acid storage cabinets shall be furnished with one solid, removable polyethylene corrosion resistant shelf.

4. Sizes:
   a. Undercounter Cabinets: Width per drawings; height to be the manufacturer’s standard for undercounter applications.
   b. Tall Acid Cabinets: 45 gallon capacity, 18” x 43” wide x 65” tall or width as noted. Furnish with two adjustable corrosion resistant shelves.

C. Flammable Chemical Storage Cabinets: Cabinets shall be specifically designed for the storage of flammable and combustible liquids. Construction shall be based upon the requirements listed by UFC, 18 gauge steel and shall be all double panel construction with a 1-1/2” air space between panels. Provide stainless steel construction when flammable chemical storage cabinets are next to stainless steel cabinetry. All joints shall be welded, or screwed, to provide a rigid enclosure. The doors shall swing on full-length stainless steel piano. The right hand door shall be equipped with a three point latching device and the left-hand door shall have a full height astragal. The doors are self-closing and synchronized so that both doors will always fully close. The right hand door is equipped with a three-point latching system that automatically engages when the doors close. Each door is equipped with a fusible-link hold-open feature that will ensure the door closes should the temperature outside the cabinet exceed 165 degrees Fahrenheit. Units 24” long have only one door, self-closing, and equipped with a three point latching system and hold-open feature. A 2” deep liquid tight pan that covers the entire bottom of the cabinet shall be furnished to contain liquid leaks and spills. Provide a full-depth adjustable shelf. The shelf shall be perforated to allow air circulation within the cabinet. The cabinet shall have interior finish same as exterior. The unit shall be UL listed.

1. Top, bottom and sides: 18 gauge steel, double wall construction with 1-1/2" air space, removable access and back panels; all joints welded.

Set bottom of door two inches above bottom of cabinet to create two-inch deep well to contain spillage of liquids.

Hardware:

a. 3 point latching device and lock.

b. Full length piano hinge.

c. Door operation: Self-closing with fusible link.

2. Upper and lower arrester vents with spark screens: Factory Mutual approved vents located so that they can be plugged both internally and externally to assure isolation of stored fluid, but can be opened for ventilation means as required by applicable local codes.

3. Cabinet grounding attachment: Screw at base of cabinet for firm attachment of grounding wire.

4. Cabinet color and markings:

a. Cabinet and markings color shall be selected from the manufacturer's standard colors.

b. Mark with Factory Mutual approval.

c. Label cabinet: "FLAMMABLE - KEEP FIRE AWAY".

5. Flammable chemical storage cabinets indicated to be ventilated or vented shall be exhausted as follows:

a. Ventilated Flammable chemical storage cabinets located adjacent to or under fume hoods shall be equipped with ventilation kits providing positive ventilation from the cabinet, bypassing the interior of the fume hood between the liner and the steel housing, and connecting directly to the exhaust duct transition piece above the fume hood or where indicated by the mechanical drawings. Vent piping and its connection to the solvent storage cabinet shall comply with requirements of NFPA30 and NFPA45 and shall be provided by Division 22 and 23.

b. Ventilated Flammable chemical storage cabinets installed independent of fume hoods shall be provided with individual exhaust vents to be run to the exterior through the roof of the building to an exhaust fan. Ductwork and fan shall be by HVAC ductwork installer. Vent piping and its connection to the solvent storage cabinet shall

comply with requirements of NFPA30 and NFPA45 and shall be provided by Division 22 and 23.

D. Shelving: Provide with two 18 inch (460 mm) deep, full width adjustable shelves.

E. Grounding: All cabinets shall be grounded.

F. Finish: Powder coated or urethane. Color selected from manufacturers color line.

G. Sizes:
   1. Undercounter Flammable Chemical Cabinets: Width per drawings; height to be the manufacturer's standard for undercounter applications.
   2. Tall Flammable Chemical Cabinets: 45 gallon capacity, 18" x 43" wide x 65" tall.

2.10 LABORATORY COUNTERTOP SURFACES & BACKSPLASHES

A. Provide and install countertops where shown on the drawings on lab cabinetry and mobile tables. Countertop fabricator shall drill all holes and make all cuts in countertop materials as required for the proper installation of all plumbing and electrical work.

   1. Radiused Corners: All outside corners of all countertops shall have a finished 1/2" radius in plan.
   2. Drip Groove: Provide continuous drip groove on underside of all counter-tops, 1/4 to 1/2 inch inboard of the front edge.
   3. Backsplashes shall match countertops in material and color.

B. Epoxy Resin Countertop: Epoxy Resin Countertop: Provide epoxy resin countertops at all laboratory spaces. Also, provide epoxy resin window sills at exterior window sills in all lab spaces.

   1. Subject to compliance with these specifications, acceptable products include, but are not limited to, those manufactured and provided by the following companies.

      - Laboratory Tops
      - Durcon
      - Kewaunee

   2. Material: Basis of design *Durcon Inc. Greenstone Environment friendly worksurfaces*. Chemical and abrasion resistant, durable top of one-inch thick cast material of epoxy resins and inert fillers, cast flat, with a uniform color and low-sheen surface at all surfaces (tops, sides and ends), forming a thermosetting material with the following properties:

a. Tensile strength: ASTM D651-48, 8,000 psi.
b. Compressive strength: ASTM D695-61T, 28,000 to 30,000 psi.
c. Flexural strength: ASTM D790-61, 17,000 to 18,000 psi.
d. Flexural modulus: ASTM D790-61, 2.2 x 10 to the 6th power psi.
e. Hardness: ASTM D785-60T, Rockwell M, 107 to110.
f. Density: ASTM D792-50, 1.92g/cc.
g. Water absorption: ASTM D570-59, 0.02% in 24 hours.
h. Heat distortion temperature: 350 degrees F.
i. Thermal expansion coef: 2.02 x 10 to the minus 5th power in/in/º F.

3. Backsplashes: Same material as top, at heights as shown on the drawings, butt jointed and cemented to top. Provide where indicated on drawings. Include end curb where top abuts end wall.

4. Epoxy edge: All edges shall be beveled with a 3/16” bevel, and polished to match the finish of the epoxy top.

5. Epoxy Color #1: Shall be selected by the architect from the manufacturer’s complete line of colors, including light gray, and other color options manufactured by Laboratory Tops, Durcon, Kewaunee, or equal products with a similar color by other manufacturers. Color of epoxy resin tops in fume hoods shall match adjacent counter tops.

6. Work Surface Performance Requirements (factory test):

   a. Test procedure: Apply five drops of each reagent to surface and cover with 25mm watch glass, convex side down; test volatiles using one ounce bottle stuffed with saturated cotton. After 24-hour exposure, flush surface, clean, rinse and wipe dry.

   b. Evaluation ratings: Change in surface finish and function shall be described by the following ratings:

      1. No effect: No detectable change in surface material.

      2. Excellent: Slight detectable change in color or gloss, but no change to the function or life of the work surface material.

      3. Good: Clearly discernible change in color or gloss, but no significant impairment of work surface function or life.

      4. Fair: Objectionable change in appearance due to surface discoloration or etch, possibly resulting in deterioration of function over an extended period.

5. Failure: Pitting, crating or erosion of work surface material; obvious and significant deterioration.

7. Test results:

REAGENT	RATING
a. Hydrochloric Acid, 37%	Excellent
b. Nitric Acid, 22%	Excellent
c. Nitric Acid, 30%	Excellent
d. Nitric Acid, 70%	Good
e. Phosphoric Acid, 85%	No Effect
f. Sulfuric Acid, 33%	No Effect
g. Sulfuric Acid, 77%	No Effect
h. Sulfuric Acid, 96%	Failure
i. Ammonium Hydroxide, 28%	No Effect
j. Sodium Hydroxide, 10%	No Effect
k. Sodium Hydroxide, 20%	No Effect
l. Sodium Hydroxide, 40%	No Effect
m. Sodium Hydroxide Flake	No Effect
n. Acetone	Excellent
o. Carbon Tetrachloride	No Effect
p. Ethyl Acetate	No Effect
q. Ethyl Alcohol	No Effect
r. Ethyl Ether	Excellent
s. Formaldehyde	No Effect
t. Hydrogen Peroxide, 5%	No Effect
u. Methylethyl Ketone	Excellent
v. Phenol	Excellent
w. Xylene	No Effect
x. Formic Acid, 90%	Excellent
y. Hydrofluoric Acid, 48%	Fair
z. Chromic Acid, 60%	Failure
aa. Acetic Acid, 98%	Excellent
bb. d and h, equal parts	Excellent
cc. Sodium Sulfide	Excellent
dd. Zinc Chloride	No Effect
ee. Tincture of Iodine	Excellent
ff. Silver Nitrate	No Effect
gg. Methyl Alcohol	No Effect
hh. Butyl Alcohol	No Effect
ii. Benzene	Excellent
jj. Toluene	Excellent
kk. Gasoline	No Effect
ll. Dichlor Acetic Acid	Good
mm. Di Methyl Formamide	Excellent
nn. Amyl Acetate	Excellent
oo. Chloroform	Excellent

pp.	Cresol	Excellent
qq.	Trichloroethylene	Excellent
rr.	Furural	Good
ss.	Methylene Chloride	Excellent
tt.	Mono Chlor Benzene	Good
uu.	Dioxane	Excellent
vv.	Acid Dichromate	Fair
ww.	Naphthalene	Excellent

D. Stainless Steel Countertop (Refer to Stainless Steel casework specifications elsewhere in this section)

E. Hardwood Solid Core Countertop (where indicated on drawings)

1. Edge grain maple top: 2" thick top with edge grain exposed, composed of solid hard maple strips not more than 1-3/4" wide, glued with water resistant resin under heavy pressure side to side and end to end. Beveled top edges and corners and sand smooth. Backsplashes to match.

2. Shelf material to match counter specification, but 1” in thickness.

2. Apply two coats of boiled linseed oil, well rubbed into all surfaces.

2.11 LABORATORY SINKS

A. Provide laboratory sinks complete with overflows, sink outlets and tailpieces. P-traps, supplies and valves to be provided by Division 22, plumbing subcontractor. Lab casework contractor shall set sink, but all other final plumbing installation and connection shall be by Division 22. Lab sinks are indicated in the drawings on the lab casework.

B. Epoxy resin sinks: Integrally molded from modified thermosetting epoxy resin, specially compounded and oven cured and set with epoxy cement. Color shall match the adjacent countertop. Drop in units will be acceptable. Physical properties shall be as described for epoxy resin countertops. Cove inside corners and pitch bottom to threaded drain outlet.

1. Size: As scheduled.

2. Location: All sinks shown in epoxy resin countertops.

3. Drain location: Center.

4. Tailpiece: Compatible with drain piping. Color to match sink.

5. Color: Match adjacent epoxy resin countertops.

6. Faucet ledge to be at rear of sink with deck mounted horizontal paddle arm style hand controls located 4” to either side of faucet. Deck mounted eyewash units shall be located per manufacturer’s recommendations.

7. Subject to compliance with these specifications, acceptable products include, but are not limited to, those manufactured and provided by the following companies.

   - Laboratory Tops
   - Durcon
   - Epoxyn Products

C. Stainless steel sinks: Type 304 stainless steel, No. 4 polish. Provide in 16-gauge material.

1. Provide 1/2" radius cove at vertical and horizontal corners and pitch bottom to drain plug. Electrically weld, grind and polish smooth all joints rendering joints seamless. Apply heavy mastic type sound deadening coating to underside. Include crumb cup strainer with tailpiece.

2. Except for sinks integral with stainless steel top, mount sinks with an integral frame; separate frames or mounting rims not acceptable.

3. Location: All sinks shown in plastic laminate and chemical resistant plastic laminate countertops.

4. Size: As indicated in drawings.

5. Drain location: Center

D. Sink supports:

1. Cabinet sinks: Support sinks on 11 gauge, adjustable, 1" x 2" x 1" channel with reagent resistant finish. Provide two channels across width of cabinet, attached to 3/8" diameter threaded hanger rods.

2.12 LABORATORY PLUMBING & ELECTRICAL FITTINGS

A. General:

1. Products shall be Watersaver-Colortech series or other manufacturers listed in section 2.1, or other equal products manufactured by other manufacturers. Minor differences from these specifications in the design, manufacturing techniques and appearance of the products offered by the approved manufacturers are acceptable.

2. All fixtures shall be warranted for a period of two years after date of occupancy. All laboratory service fixtures shall be the product of one service fixture manufacturer to ensure uniform appearance and ease of maintenance.

3. All service fittings shall be factory assembled (including the assembly of valves and shanks to turrets, flanges and other mounting accessories), and each fixture shall be individually factory tested. All fixtures shall be designed to minimize exposed surfaces on which dust, dirt and airborne contaminants may collect, and to facilitate cleaning and maintenance of the service fixture. Faucet and valve handles shall be hooded to cover the valve stem and top surface of the packing nut or bonnet. The valve stem shall not be exposed to view as the faucet or valve is opened and closed.

4. Installation: Lab casework contractor shall furnish all laboratory plumbing and electrical fittings specified, but these shall be turned over to the Division 22, 23 and 26 contractor for installation.

B. Finish:

1. Chrome: All laboratory service fittings (except fittings inside fume hoods) and emergency eyewash and shower equipment shall be furnished with a chrome-plated finish with clear epoxy coating. All exposed surfaces shall be polished and buffed, then electroplated with one layer of nickel and one layer of chrome. Following plating, clear epoxy coating shall be applied to all exposed surfaces and then baked to permit curing. Surfaces shall have a minimum thickness of 2 mils.

2. Performance: All coating material shall meet the following tests for chemical resistance:

   a. Fume test: Suspend coated samples in a container at least 6 CF capacity approximately 12” above open beakers, each containing 100 cc of 70% nitric acid, 94% sulfuric acid and 35% hydrochloric acid, respectively. After exposure to these fumes for 150 hours, the finish on the samples shall show no discoloration, disintegration or other effects.

   b. Direct application test: Subject coated samples to the direct action of the following reagents and solvents at a temperature of 25 degrees C dropping from a burette at a rate of 60 drops per minute for 10 minutes.

Acetone, Carbon Tetrachloride, Ethyl Alcohol, Glacial & Acetic Acid	99.5%	
Hydrochloric Acid	38%	
Mineral Oil, Nitric Acid	70%	
Sodium Hydroxide	50%	
Sulfuric Acid, Toluene & Zinc Chloride-Saturated		92%

Finish on samples shall not rupture, though slight discoloration or possible softening is possible.

C. Water Service Fittings: Provide deck mounted plumbing service fittings at laboratory sinks as follows:

1. Provide deck mounted mixing faucet with deck mounted 4” blade handles and 8” swinging goosenecks with vacuum breakers. Provide model # CT2224-8VB with integral vacuum breaker as manufactured by Watersaver-Colortech, or other manufacturers. Provide standard aerator type of fitting on each faucet. The water faucets and valves shall be fully assembled and individually tested at the factory. Fixtures shall be factory tested at 100 psi to withstand 80 psi working pressure. Water service faucets and valves shall have renewable unit containing all working parts subject to wear, including replaceable stainless steel seat. All water service fixtures shall meet the requirements of ANSI/ASME A112.18.1M-1989 and be certified by CSA under standard CAN/CSA B.125.M89.

2. Goosenecks shall have a separate outlet coupling with a 3/8” IPS female thread securely brazed to the gooseneck for attachment of serrated hose ends, aspirators and other outlet fittings. Provide each rigid gooseneck with standard aerator type of fitting installed on each faucet. Additionally, provide 1-loose 3/8” IPS male inlet thread that the Owner can use in the future to be threaded directly into the faucet.

3. Provide vacuum breakers integral with the gooseneck. Vacuum breakers shall have a forged brass body, a renewable seat and an ultra light float cup with a silicone gasket for fine flow control. Vacuum breakers shall not spill over at low water volume. Vacuum breakers shall be certified by ASSE under standard 1001.

4. Handles: All water service fittings shall be provided with separate deck mounted faucets with horizontal acting wrist blade handles conforming to ADA Accessibility Standards. Faucet design shall be compatible with the foot pedal water delivery system specified in this section.

5. Hands-Free Fittings as Scheduled: Faucets shall be provided with hands free operation, using foot pedal operated devices, at locations as indicated in the Laboratory Sink Schedule, either foot pedal operated or infrared operated as scheduled.

   a. Foot pedal operated faucets: Provide model # CT2224TWI-8VBL3001LP with integral vacuum breaker as manufactured by Watersaver-Colortech or equal products by other manufacturers. Refer to plumbing drawings for plumbing work associated with piping. All sinks with hands free devices shall also have standard faucets to enable persons to manually adjust hot and cold water temperature. Lab casework manufacturer shall coordinate and prep all casework as required for the installation of foot pedal fittings

and plumbing. Deck mounted water fittings with the foot pedal operation shall match the appearance of those at other locations. Provide with deck mounted 4" blade handles and 8" goosenecks with vacuum breakers and standard aerator. Provide painted steel cover over the exposed piping within the sink base cabinet to conceal the exposed piping.

b. Infrared operated faucets: Provide model # CT4554-8VB as manufactured by Watersaver-Colortech, with transformer that plugs into an electrical outlet under the counter, or equal products by other manufacturers. Refer to plumbing drawings for plumbing work associated with piping. All sinks with hands free devices shall also have lever blade handles to enable persons to manually adjust hot and cold water temperature. Lab casework manufacturer shall coordinate and prep all casework as required for the installation of foot pedal fittings and plumbing. Deck mounted water fittings with the infrared operation shall match the appearance of those at other locations. Provide with deck mounted 4" blade handles and 8"goosenecks with vacuum breakers and standard aerator.

6. Pure Water fittings: Watersaver CT7833 non-recirculating pure water fitting with all polypropylene internal construction, rated for 80 psi water pressure. Furnished by the lab casework contractor and installed by the pure water contractor.

7. Commercial Gooseneck Sprayer Assembly: Provide pre-rinse unit with spring action gooseneck and back flow preventer, model #B-0133-B with B-044-VP stainless steel hose with backflow preventor, manufactured by T&S, or Watersaver-Colortech model CTPR411-110. Provide all mounting brackets as required for the complete installation. Other equal products by other manufacturers will be acceptable.

D. Needle Valves *(Laboratory Compressed Air):* Provide service fittings as follows: Model # CT2880-231WSA by Watersaver-Colortech;

1. Deck mounted turret base with single straight pattern laboratory needle valve and mounting shank: Unit shall have stop valve and regulating flow valve. Unit shall have forged brass body with 3/8" IPS female outlet for attachment of serrated hose ends, quick disconnects or other outlet fittings. Valves shall have a self-centering replaceable stainless steel floating cone and a replaceable brass valve seat. Needle valves shall be fully assembled and individually tested at 300-psi helium under water. Maximum working pressure shall be 125-psi pressure.

2. Provide unit with provisions to accept 1/8" ø instrument piping.

3. Spare fittings: In addition to those gas service fittings shown in the drawings, provide 8 additional spare units, delivered to the Owner in unopened containers.

4. Provide in single, angled or 180º fittings as required for bench situations.

E. Fine Control Needle Valves *(5.0 Ultra High Purity Laboratory Instrument Gas Service Fittings)* Provide service fittings as follows: Model # CT2873-772WSA by Watersaver-Colortech for all Hydrogen (H), Helium (He), Nitrogen (N) and Zero Air (LA) and Spare (SP); or model # 02413003 by Broen for all gases.

1. Deck mounted single pressure regulating turret with straight pattern laboratory fine control needle valve: Unit shall have stop valve, fine tune regulating flow valve and integral gauge. Unit shall have forged brass body with 3/8" IPS female outlet for attachment of serrated hose ends, quick disconnects or other outlet fittings. Valves shall have a self centering replaceable stainless steel floating cone and a replaceable brass valve seat with a .125" diameter orifice, and stainless steel diaphragms. Fine control needle valves shall be fully assembled and individually tested at 300-psi helium under water. Maximum working pressure shall be 200-psi pressure.

2. Inlet pressure: 400-psig max.

3. Outlet pressure: 0-125 psig

4. Gauge: 0-200 psig

5. Regulator type: Single stage non-relieving with stainless steel diaphragm.

6. Provide unit with quick disconnect fitting BO188, with provisions to accept 1/8" ø instrument piping.

7. Clean, and seal fittings to 5-9's (99.999%) purity. Deliver capped and bagged.

8. Spare fittings: In addition to those gas service fittings shown in the drawings, provide 8 additional spare units, delivered to the Owner in unopened containers.

F. Combination emergency eyewash/shower units:

1. Combination emergency shower/eyewash units:

a) Swing Down Recessed eye wash and emergency showers with eyewash drain pan (**ESEW-1**): Watersaver model # SSBF2150 SS finish with chrome plated brass construction including top extension and shower head, where swing down units are called for, **pipe eyewash pan drainage to fully concealed sanitary waste system**. Do not discharge eyewash on to floor!

2. Provide units where shown in the lab casework drawings. All units shall comply with ADA for handicap accessibility. Provide all signage required by ANSI and OSHA. Water flow from units shall comply with ANSI Z358.1. Unit shall be capable of being operated by both hand and foot devices.

3. Body shower component of the combination shower/eyewash shall provide sufficient flow with correct dispersion. The operating system is to be a stay -open-ball-valve with rod operation. The ball valve is to be replaceable without dismantling the entire shower. Each shower shall be supplied with an international approved emergency symbol for easy identification as required by the Federal Occupational Safety and Health Administration. Showers to be tested at a minimum pressure of 100 psi before leaving the factory. The base floor flange shall have 3 holes for secure mounting. Provide tailpiece assembly for the eyewash drain outlet, sized and configured to drain into the floor drain, and constructed of material matching the eyewash/shower unit.

4. Eyewash component of the combination shower/eyewash unit shall have a self-regulating flow control, a filter to remove debris from the water, and an integral flip-top dust cover. The operating system is to be a hand activated push 'stay-open-ball-valve'. Eye washes to have a built-in ball valve or to be provided with a loose ball valve for correct flow regulation.

5. All mixing valves shall be provided by Division 22.

6. Provide a chrome-plated tailpiece at the base of ESEW-1.

7. Waste connections are concealed in wall.

G. Deck mounted drench hose eyewash units (**EW**):

1. Watersaver model # CTEW1022BP (@ right hand of sink). Provide deck mounted drench hose eyewash units at lab sinks, where indicated, with in-line vacuum breaker. Unit shall have 2 gentle spray outlet heads. Provide all signage required by ANSI and OSHA. The design of these units and their water flow, shall comply with ANSI Z358.1 for dedicated eyewash equipment. All mixing valves shall be provided by Division 22.

H. Color Coded Handles for service fittings, faucets and controls: Provide faucet and service fittings with color coded hooded handles, with entire removable screw-on type plastic discs with letter stamped on disc in contrasting color as scheduled below:

SERVICE	HANDLE COLORS	DISC LETTERS
1. Gas	Dark Blue	Gas
3. Compressed Air	Orange	C-Air
4. Cold Water	Dark Green	C.W.

5.	Hot Water	Red	H.W.
6.	Purified Water	White	D.W.
7.	Nitrogen 5.0	Brown	N
8.	Nitrogen 4.0	Gray	N
9.	Hydrogen	Pink	H
10.	Argon	Violet	Ar
11.	Helium 4 & 5	Black	He
12.	Spare Gas	Light Green	SP
13.	Vacuum	Yellow	Vac

I. Electrical fixtures and fittings: Lab casework manufacturer shall coordinate location of and prep all casework for installation of multi-outlet assemblies and other electrical work specified under Division 26. All electrical work shall be by the electrical subcontractor. Material and installation shall be in strict adherence with the current edition of the National Electric Code of the National Fire Protection Association, and with requirements of all local regulatory authorities. All outlets must be grounded.

1. Flush boxes: Galvanized steel, for duplex outlets.

2. Task Lights: Specified by Division 26, provided by electrical contractor and delivered to the laboratory casework installer for on-site setting of fixture to underside of upper cabinetry. All wiring to be performed by the electrical contractor as specified by Division 26.

2.13 LABORATORY CASEWORK ACCESSORIES

A. Marble Balance Tables (Key Note **116**): Provide Danby Vermont Marble table in location indicated in drawings. Size: 35” w x 31” h x 24” d. Color shall be coordinated with interior designer. Seal table top and sides.

B. Pullout Writing Boards: Provide pullout-writing boards on full extension slides matching the draws at all locations noted. Pullout boards shall match cabinetry.

C. Key Case Cabinet: Provide manufacturer’s standard wall mounted key cabinet to match the type of lab casework being provided (wood or metal). Provide cabinet with 88 key hooks and number tags. Size: 12” w x 4” d x 31” h.

D. Cord Hole Grommet: Provide cord grommet with a flange projecting 1/4” onto surrounding counter surface.
1. Manufacturer: Rockler
2. Model: 91017, Black
3. Size: Overall size: 3” diameter; hole size: 2 1/2”; slot size: 7/8”; depth: 5/8”

2.14 CHEMICAL FUME HOODS: KEWAUNEE SUPREME AIR FUME HOOD

A. Fume Hood General Design Requirements

1. The Basis of Design for this specification is the Supreme Air fume hood as manufactured by Kewaunee Scientific Corporation, 2700 West Front Street, Statesville, North Carolina.

   a. Standard Fume Hood: Supreme Air LV
   b. ADA Fume Hood: Supreme Air (Combination Vertical Rising/Horizontal Sash)

2. Intent and Function: Fume hoods shall function as ventilated, enclosed work-spaces, designed to capture, confine and exhaust chemical fumes, vapors and particulate matter produced or generated within the enclosure. Fume hoods shall be designed for consistent and safe airflow through the hood face. Negative variations of face velocity shall not exceed 20% of the average face velocity at any designated measuring point as defined in this section.

3. Work Area: Work area shall be defined as the area inside the superstructure from side to side and from face of baffle to the inside face of the sash, and from the working surface to a height of 28 inches.

4. Illumination: Average illumination of work area shall be minimum 80 foot-candles at the fume hood work surface.

5. Fume hood shall be designed to minimize static pressure loss with adequate slot area and bell shaped exhaust collar configuration. Maximum average static pressure loss readings taken three diameters above the hood outlet from four points, 90 degrees apart, shall not exceed 0.5 inches w.g. with the following sash opening in <u>the full</u> open position as follows:

   <u>Face Velocity - 18” sash opening</u>

   100 FPM

6. Static pressures and fume hood entry CFM are as given for each fume hood in the fume hood manufacturer’s product specifications/literature. The standard governing this specification is the Supreme Air Fume Hood by <u>Kewaunee</u>.

7. Variable Air Volume Fume Hoods and Dedicated Low pH Acid Fume Hood:

   a. Fume hoods shall be variable air volume fume hoods with restricted bypass. Fume hood FH6-3 for low pH acid ventilation shall be constant volume with dedicated direct exhaust.
   b. As sash is lowered on VAV fume hoods, face velocity shall remain constant at 100 ft. per min. (FPM). When the sash is fully closed a minimum of 25% of the airflow will occur. The fume hood shall be equipped with a sash stop, which prevents the sash from opening beyond 18” high. Sash stop may be released to allow the sash to be fully opened for the purpose of installing or dismantling apparatus only.

8. At the specified open position the fume hood entry volume flow rate in cubic feet per minute (CFM) shall be approximately as follows, to be verified by the contractor based on actual manufacturer's data:

FUME HOOD WIDTH Opening	CFM 18"
a. 4-feet (vertical rising sash)	485 – 500
b 5-feet (vertical rising sash)	650 - 660
c. 6-feet (vertical rising sash)	785 - 800
d. 8-feet (vertical rising sash)	1081 - 1100
e. 4-feet floor mounted(vertical rising sash)	810 - 850

FUME HOOD WIDTH CFM (HO9) Combination Sash

a. 4-feet ADA (combination sash)	400 – 480
b. 5-feet ADA (combination sash)	550 - 650
c. 6-feet ADA (combination sash)	720 - 780
d. 8-feet ADA (combination sash)	1010 - 1100

9. ADA compliant fume hoods: Provide the manufacturer's standard ADA compliant fume hood where ADA hoods are indicated in the drawings. Specific requirements for ADA hoods, above and beyond the standard hood specification, are indicated in brackets [ ], italicized and noted 'Special ADA Requirement'. ADA Compliant hoods are designated in the drawings with 'ADA'.

10. Noise criteria: Test data of octave band analysis verifying hood is capable of a 50 NC value when connected to a 50 NC HVAC source. Reading taken 3' in front of open sash at 110 fpm face velocity.

11. UL Label: Provide all units with approved UL 1805 labels or provide UL certification in field. All hoods must be UL certified and labeled as such. (UL 1805 is now the standard for fume hood certification. UL 1805 covers not just electricals, but construction and airflow standards for fume hoods.)

B. Fume Hood Liner Surface Finish Performance Requirements

1. Fume hood liner shall be either stainless steel or polyresin material per the fume hood schedule given in the drawings. Liners shall conform to physical properties and test results in accordance with the testing procedures described below:

2. Test Procedure No. 1 - Spills and Splashes (factory test):

a. Suspend in a vertical plane a 42" (horizontal) by 12" (vertical) panel divided into 3/4" wide vertical columns, each column numbered 1 through 49.

b. Apply five drops of each reagent listed with an eye dropper.

c. Apply liquid reagents at top of panel and allow to flow down full panel height. (CAUTION! Flush away any reagent drops.)

3. Test Procedure No. 2 - Fumes and Gases:

   a. Divide 24" x 12" panel into 2" squares, each square numbered 1 through 49.

   b. Place 25 milliliters of reagent into 100-milliliter beakers and position panel over beaker tops in the proper sequence. Note: Beaker pouring lip permits atmospheric oxygen to enter and participate in the reaction of the reagent fumes.

4. After 24 hours remove panel, flush with water, clean with naphtha and detergent, rinse, wipe dry and evaluate.

5. Evaluation ratings: Change in surface finish and function shall be described by the following ratings:

   a. No Effect: No detectable change in surface material.

   b. Excellent: Slight detectable change in color or gloss, but no change to the function or life of the work surface material.

   c. Good: Clearly discernible change in color or gloss, but no significant impairment of work surface function or life.

   d. Fair: Objectionable change in appearance due to surface discoloration or etch, possibly resulting in deterioration of function over an extended period.

   e. Failure: Pitting, cratering or erosion of work surface material; obvious and significant deterioration.

6. Test Results: Polyresin Fume Hood Liner

   Test procedure:
   1. Test No. 1 - Spills and Splashes:
      a. Suspend in a vertical plane a 42" (horizontal) by 12" (vertical) panel divided into 3/4" wide vertical columns, each column numbered 1 through 49.
      b. Apply five drops of each reagent listed with an eye dropper.
      c. Apply liquid reagents at top of panel and allow to flow down full panel height. (CAUTION! Flush away any reagent

drops.)

2. Test No. 2 - Fumes and Gases:
   a. Divide 24" x 12" panel into 2" squares, each square numbered 1 through 49.
   b. Place 25 milliliters of reagent into 100 milliliter beakers and position panel over beaker tops in the proper sequence. Note: Beaker pouring lip permits atmospheric oxygen to enter and participate in the reaction of the reagent fumes.

3. After 24 hours remove panel, flush with water, clean with naphtha and detergent, rinse, wipe dry and evaluate.

Evaluation ratings: Change in surface finish and function shall be described by the following ratings:

1. No Effect: No detectable change in surface material.

2. Excellent: Slight detectable change in color or gloss, but no change to the function or life of the work surface material.

3. Good: Clearly discernible change in color or gloss, but no significant impairment of work surface function or life.

4. Fair: Objectionable change in appearance due to surface discoloration or etch, possibly resulting in deterioration of function over an extended period.

5. Failure: Pitting, cratering or erosion of work surface material; obvious and significant deterioration.

Test Results: "P" Fume Hood Liner

	REAGENT LIST Concentrations by Weight	Test No. 1 Rating Spills	Test No. 2 Fumes
1.	Sodium Hydroxide Flake	---	No Effect
2.	Sodium Hydroxide, 40%	Excellent	No Effect
3.	Sodium Hydroxide, 20%	Excellent	No Effect
4.	Sodium Hydroxide, 10%	Excellent	No Effect
5.	Ammonium Hydroxide, 28%	No Effect	No Effect
6.	Eldorado - Plus (Solution)	No Effect	No Effect
7.	Chloroform	Excellent	No Effect
8.	LpH SE (Solution)	No Effect	No Effect
9.	Trichloroethylene	Excellent	No Effect
10.	Monochlorobenzene	Excellent	No Effect
11.	Tincture of Iodine	Excellent	Excellent
12.	Methyl Alcohol	No Effect	No Effect
13.	Ethyl Alcohol	No Effect	No Effect

14.	Butyl Alcohol	No Effect	No Effect
15.	Phenol, 85%	Excellent	No Effect
16.	Cresol	Excellent	No Effect
17.	Sodium Sulfide, Saturated	Good	No Effect
18.	Furfural	Fair	No Effect
19.	Dioxane	No Effect	No Effect
20.	Zinc Chloride, Saturated	No Effect	No Effect
21.	Benzene	Excellent	No Effect
22.	Toluene	Excellent	No Effect
23.	Xylene	Excellent	No Effect
24.	Gasoline	Excellent	No Effect
25.	Naphthalene	Excellent	No Effect
26.	Methyl Ethyl Ketone	Excellent	No Effect
27.	Acetone	Excellent	No Effect
28.	Ethyl Acetate	Excellent	No Effect
29.	Amyl Acetate	Excellent	No Effect
30.	Ethyl Ether	Excellent	No Effect
31.	Silver Nitrate, 10%	Good	No Effect
32.	Di Methyl Formamide	No Effect	Excellent
33.	Formaldehyde, 37%	No Effect	No Effect
34.	Formic Acid, 88%	No Effect	No Effect
35.	Acetic Acid, Glacial	No Effect	No Effect
36.	Dichloro Acetic Acid, 93%	Excellent	Excellent
37.	Chromic Acid, Saturated	Good	No Effect
38.	Phosphoric Acid, 85%	No Effect	No Effect
39.	Sulfuric Acid, 33%	No Effect	No Effect
40.	Sulfuric Acid, 77%	Excellent	No Effect
41.	Sulfuric Acid, 93%	Good	No Effect
42.	Hydrogen Peroxide, 30%	No Effect	No Effect
43.	Acid Dichromate	Excellent	No Effect
44.	Nitric Acid, 20%	Excellent	No Effect
45.	Nitric Acid, 30%	Excellent	No Effect
46.	40 & 47 Equal Parts	Excellent	Good
47.	Nitric Acid, 70%	Excellent	Good
48.	Hydrochloric Acid, 37%	No Effect	Excellent
49.	Hydrofluoric Acid, 48%	No Effect	Failure

7. Physical properties:

   a. Reinforced polyester panels and epoxy resin, smooth finish and white color in final appearance.

   b. Flexural strength: 14,000 psi

   c. Flame spread: 6 or less per U.L. 723 and ASTM E84-80

C. Fume Hood Materials

1. Steel: High quality, cold rolled, mild steel meeting requirements of ASTM A-366; gauges U.S. Standard.

2. Stainless steel: Type 304, gauges U.S. Standard.

3. Ceiling closure panels: Minimum 18 gauge, finish to match hood exterior.

4. Bypass grilles: Low resistant type, 18-gauge steel, upward directional louvers.

5. Safety glass: 7/32" thick laminated safety glass

6. Sash belt: Stainless steel cable.

7. Sash guides: Corrosion resistant polyvinyl chloride.

8. Pulley assembly for sash cable: 2" diameter, zinc dichromate finish, ball bearing type, with cable retaining device.

9. Sash pull: Full width corrosion resistant plastic, stainless steel, or steel with chemical resistant powder coating.

10. Gaskets: 70 durometer PVC for interior access panels. Gasket interior access panels to eliminate air leakage and to retain liquids inside hood.

11. Fastenings:

    a. Exterior structural member's attachments: Sheet metal screws, zinc plated.

    b. Interior fastening devices: Concealed. Exposed screws not acceptable.

    c. Exterior panel member fastening devices: Concealed corrosion resistant non-metallic material. Exposed screws not acceptable.

12. Instruction plate: Corrosion resistant or plastic plate attached to the fume hood exterior with condensed information covering recommended locations for apparatus and accessories, baffle settings and use of sash.

D. Fume Hood Construction

1. Superstructure: Rigid, self-supporting assembly of double wall construction, maximum 4-7/8" thick.

    a. Wall shall consist of an 18 GA. sheet steel outer shell and a corrosion resistant inner liner, and shall house and conceal steel framing members, attaching brackets and remote operating service fixture

mechanisms and services. Panels must be attached to a full frame construction, minimum 14 gauge galvanized members. Panels and brackets attached to eliminate screw heads and metallic bracketry from hood interior.

b. Access to fixture valves concealed in wall provided by exterior removable access panels, gasketed access panels on the inside liner walls, or through removable front posts.

c. Supporting frames: Where cabinets are scheduled beneath fume hoods, fume hood shall rest on and be anchored to base cabinetry designed to support the fume hoods. Where cabinets are not scheduled beneath fume hoods, provide the manufacturer's standard tubular steel table frame with apron panel designed to support fume hoods, and provide unencumbered knee space beneath hoods. At fume hoods and apron depth to be ADA complaint.

2. Ceiling Skirt Enclosures: Provide ceiling skirt enclosure panels from top of hood extending up to the ceiling, terminating 1" below ceiling system. Provide an access panel in the ceiling enclosure, located below the ceiling, with thumbscrews to permit ease of accessibility to the space above the fume hood for maintenance purposes.

3. Seismic Restraints: The hood manufacturer shall provide with the hoods all anchorage devices, including special legs and or braces, for seismic restraint of hoods to satisfy all governing code requirements for seismic anchorage of equipment. Provide all seismic details with hood submittals indicating required wall construction such as wall stud size and gauge, point loads, etc.

4. Color: All painted surfaces, including ceiling enclosures, shall be provided from manufacturer's standard colors as selected by the architect.

5. Exhaust outlet:

a. Rectangular with ends radiused, bell shaped and flanged, 18 gauge stainless steel exhaust collars welded in place.

b. Fume hood manufacturer shall provide and install a rectangular to round stainless steel transition duct between the top of the fume hood and the exhaust duct. Coordinate outlet size(s) with ductwork installer. Connection of the exhaust duct to the fume hood transition piece shall be by the ductwork installer.

6. Access opening perimeter: Air foil or streamlined shape with all right angle corners radiused or angled. Bottom horizontal foil shall provide nominal one-inch bypass when sash is in the closed position. Bottom foil shall be removable without use of special tools. Bottom foil shall provide access

areas for electrical cords. Bottom foil: stainless steel to increase acid and abrasion resistance. Air foil and sill to extend no more than 1.5” in front of work surface to provide maximum aisle space and allow deeper usage.

[Access opening perimeter - Special ADA requirement: Top and sides of face opening to be radiused or angled. Bottom horizontal bypass shall provide clearance for pass through of 1-1/2” diameter hospital grade plug. Bottom horizontal foil shall provide bypass when sash is in the closed position. Bottom: Hinged to provide access for cleaning of containment trough. Bottom foil: Flush with interior work surface. Foils that extend above the work surface height are not acceptable. Containment trough: Designed to provide secondary containment in the event a spill escapes the primary containment dish top. Bottom trough: Stainless steel with black powder coating to provide maximum acid and abrasion resistance. Trough shall have drain capabilities.]

7. Fume hood sash and special controls:

   a. Sash at all fume hoods except ADA fume hoods, shall be full view type, vertical rising sash, with clear, unobstructed, side to side view of fume hood interior and service fixture connections. Sash shall be equipped with automatic sash closer. All ADA fume hoods shall have a combination sash.

   b. Bottom sash rail: 2" maximum, 18-gauge steel with powder coating finish. Provide integral formed, flush pull the full width of bottom rail.

   c. Laminated safety glass: Set safety glass into rails in deep form, extruded polyvinyl chloride or neoprene glazing channels.

   d. Counter balance system: Single weight, pulley, cable, counter balance system which prevents sash tilting and permits one finger operation at any point along full width pull. Design system to hold sash at any position without creep and to prevent sash drop in the event of cable failure. Maximum 7 pounds pull required to raise or lower sash throughout its full length of travel.

   e. Open and close sash against rubber bumper stops. Sash shall lock into place with manual override.

   f. Align top of the bottom sash rail flush with the hood interior work surface in closed position. Construct sash frame in a manner that will not require user to reach over the sash frame.

   g. Fume Hood Sash Position Sensors or face velocity sensors: Sash position sensors or face velocity sensors are specified in Division 22 and 23. The fume hood manufacture shall provide the appropriately sized cutout in the correct location to accept the sensors and monitor.

Sash or face velocity sensors shall be provided as specified in Division 22 and 23.

Manufacturer and the Division 22 and 23 subcontractor shall coordinate all installation requirements, interfaces and wiring with Division 22 and 23.

h. Fume Hood Occupancy Sensors: Occupancy sensors are specified in Division 22 and 23, and are to be furnished by the Division 22 and 23 subcontractor who shall ship these components to the fume hood manufacturer. Occupancy sensors shall be installed as part of the fume hood by the fume hood manufacturer. Prior to factory installation, the fume hood manufacturer and controls contractor shall coordinate all installation requirements, interfaces and wiring with Divisions 22, 23 and 26.

   Occupancy Sensors shall measure the presence of a person in front of the fume hood and control the sash by automatically closing the sash if no occupancy is monitored for a period of time to be determined by the architect.

i. Airfoil shall be ergonomically designed to be almost level with work surface, but angled slightly to prevent items being set on air foil. Air foil shall pivot to allow a hospital grade 20 amp plug cord without obstruction of worksurface.

[Fume hood sash- Special ADA requirement: Tempered safety glass. Full view type with clear, unobstructed, side to side view of fume hood interior and service fixture connections.

a. Bottom sash rail: 2" main frame section, 16-gauge steel with powder coating finish. Provide integral form, flush pull, the full width of bottom rail.

b. Set safety glass into rails in deep form, extruded polyvinyl chloride or neoprene glazing channels.

c. Counter balance system: Single weight, pulley, cable, counter balance system which prevents sash tilting and permits one finger operation at any point along full width pull. Design system to hold sash at any position without creep and to prevent sash drop in the event of cable failure. Maximum 7 pounds pull required to raise or lower sash throughout its full length of travel.

d. Sash: Combination, horizontal and vertical. 4' and 5' hood shall have 2 horizontal sliding panels. 6' and 8' hoods shall have 4 horizontal sliding panels. Sash shall provide a maximum 28" sash opening when raised. Top 10" of sash must be a fixed viewing panel.

e. Open and close sash against rubber bumper stops. Sash shall lock into place with manual override.

f. Align top of the bottom sash rail flush with the hood interior work surface in closed position. Construct sash frame in a manner that will not require user to reach over the sash frame.

g. Fume Hood Special Controls: Same as above for standard (non- ADA) fume hood.

8. Safety Monitor/Alarm System (which monitors and displays face velocity and provides audible and visual alarm if face velocity drops below 75 FPM or rises above 125 fpm):

a. Furnished by Division 22 and 23 and installed by Division 123450 fume hood manufacturer). Prior to factory installation, the fume hood manufacturer, Division 22 and 23 contractor and controls contractor shall coordinate all installation requirements, interfaces and wiring. Fume hood manufacturer shall prep fume hoods for sash alarms, alarm contacts, pressure switches and monitors in factory.

b. Calibration: Primary calibration of the hood is the responsibility of the fume hood manufacturer, to be accomplished in the field. Calibration is required following hood installation and balancing of all HVAC systems, supply and exhaust. (Secondary calibration has been factory set into the alarm's memory only to determine that the alarm is functional and ready for shipment.) Balancing of exhaust system and fume hoods is by Division 22 and 23 contractor.

c. Alarm signal: Refer to Division 22 and 23. (System which permits users to routinely or easily reset alarm signal points or turn off power to the unit is not acceptable.)

d. Test circuit shall be provided to verify proper Safety Monitor operation.

e. Electrical rating: Maximum 12 VDC, and a maximum current rating of 200 MA.

f. Hood manufacturer shall be responsible for providing all required accessories, mounting hardware, tubing, adapters, power supplies, etc. as required for a complete and fully operational system.

g. Low flow alarm at unoccupied mode: The fume hood shall be provided with the necessary provisions to be tied to the Owner's energy management system with the capability of automatically disabling the low flow alarm during the unoccupied mode.

h. Battery pack: Provide battery pack to supply power to the Safety Monitor for 24 hours in the event of an electrical power failure.

9. Sash monitor/alarm system: Provide vertical sash alarm system, which monitors vertical sash travel. Raising of sash above the sash stop position, shall trigger audible and visual signal. The fume hood sash monitor/alarm system shall also be interfaced with the building energy management controls system to avoid going into the alarm mode during the unoccupied mode.

   [Special ADA requirement: Alarms shall consist of silence switch to deactivate audible, located to be reachable by able bodied and handicapped individuals.]

10. Pre-wired & Pre-plumbed fume hoods:

    a. All electrical components and controls components within the fume hood shall be pre-wired to a junction box located within the top of the hood, allowing for single connections to the power or controls source, by Division 26. Extend prewired components 8” above the fume hood.

    b. Fume hoods shall be pre-plumbed allowing for a single connection for each service to its respective utility, for connection by Division 22 and 23. Extend pre-plumbed components 8” above the fume hood.

11. Acid storage cabinet bypass ventilation: Fume hoods shall include a vent riser, provided and installed by the fume hood manufacturer, located between the sidewall liner and the exterior face of the superstructure for the purpose of venting the acid storage base cabinets. Vent risers shall extend from the base cabinet to the exhaust duct above the fume hood. Material and size of vent riser shall be determined by the fume hood manufacturer, and shall be in compliance with applicable reference standards, codes and regulations. Connections of the vent riser to the base cabinet shall be by the fume hood installer. Connection to the duct above the fume hood shall be by the mechanical contractor. Venting shall provide for approximately 10 air changes per hour in each unit.

12. Fire Extinguisher: Provide fume hoods with UL listed dry chemical fire extinguisher, ADX Model 1131. Unit shall contain 8 lbs. of ABC dry chemical in stainless steel cylinder mounted on top of hood. Unit shall have spray head projecting through ceiling of hood to interior and shall have fusible link designed to activate unit when interior temperature of hood reaches 200 degrees F. 1 unit for hoods 6’ or less in width, 2 units for 8’ wide hoods. Provide pressure activated switch and contacts as required to permit fire extinguisher system to be tied into the building fire alarm system.

13. Fume Hood Liner: Polyresin or equal product: smooth finish and white color in appearance. Flexural strength: 14,000 psi. Flame spread: 15 or less per UL 723 and ASTM E84-98.

14. Baffles: Baffles providing controlled air vectors into and through the fume hood shall be fabricated of the same material as the liner. Provide exhaust slots full height on vertical sides of the baffle with upper and lower slots adjustable. Provide fixed, permanently open horizontal slot 17" above the work surface. Minimum height of 19" for interior workspace is required at the extreme upper portion of the fume hood to provide maximum interior work area. All baffle support brackets to be non-metallic.

    a. Screen: Provide perforated stainless steel screen, consisting of a stainless steel wire mesh with 7/8” mesh size, applied with a urethane powder coated acid resistant finish. Locate screen at back baffle area to prevent small evidential articles from being swept up into the exhaust system.

15. Remote baffle adjustment: Single point control operated from front of hood, accomplished while hood is in use without disturbing apparatus, and permitting setting for (1) high thermal loading, (2) heavier than air gasses or fumes generated near work surface, and (3) normal or average operation.

    [Remote baffle adjustment - Special ADA Requirement: Instantaneous, one-handed single point control operated from front of hood, accomplished while hood is in use without disturbing apparatus, and permitting setting for (1) high thermal loading, (2) heavier than air gasses or fumes generated near work surface, and (3) normal or average operation.

16. Plumbing Service fixtures and fittings: Color-coded outlets at hose nozzle outlets and valves mounted inside the fume hood and controlled from the exterior with color-coded index handles. Color-coding to be same as laboratory service fittings specified elsewhere in this specification.

    a. Needle Valves: Needle point type with self-centering cone tip and seat of hardened stainless steel. Tip and seat shall be removable and replaceable. Provide needle valve on nitrogen valves, where required, to regulate gas pressure down to 0-50 psi.

    b Provide piping for all service fittings from valve to outlet: Copper for water, air and vacuum, and type L oxy cleaned hard copper with brass compression fittings at gas services.

    c. Fume hoods shall be pre-plumbed allowing for a single connection for each service to its respective utility, <u>except for treated water systems</u>, which shall be provided in totality under Division 22 and 23.

d. Fixtures exposed to hood interior: Brass with chemically resistant coating, color-coded per service.

e. Remote control handles: Easy to grasp plastic hooded handles, color-coded per service.

f. Cupsinks: Epoxy resin, integrally molded from modified thermosetting epoxy resin, the same color as the worktop, specially compounded and oven cured. Cove inside corners and pitch bottom to threaded drain outlet. Size: Oval, 3" x 6" x 6" deep. Coordinate location of cupsinks in fume hoods installed over solvent storage cabinets. Each cupsink shall be provided with a removable drop-in stainless steel perforated grate that when in place is flush with the adjacent counter surface.

g. Services: Provide as scheduled. All outlets shall have detachable serrated outlet nozzles.

h. Fittings are to be constructed to operate with the following maximum working pressure without leak or failure. All outlets shall be <u>front loaded</u> for ease of access and maintenance at point of use. Provide two fittings for each faucet in each fume hood; one to be a detachable serrated nozzle and one to be the standard aerator type of fitting. Install the aerator type of fitting and place the serrated fitting in an unopened container inside the fume hood.

1. Water fittings: 150 psi
2. Lab gases: 300 psi

i. Special ADA requirement: Locate services to be reachable by both an able bodied as well as wheel chair bound individual.

j. Treated water faucets, fittings and all plumbing associated with treated water systems shall be provided under Division 22 and 23. The laboratory casework and fume hood contractor shall coordinate the fume hood design and construction with the contractor responsible for the treated water system.

17. Hood light fixture: Two lamp, rapid start, UL listed fluorescent light fixture with sound rated ballast installed on exterior of roof. Provide safety glass panel cemented and sealed to the hood roof. Light fixture shall be external to, and sealed from, the fume hood cavity.

a. Interior of fixture: White, high reflecting plastic enamel.

b. Size of fixture: Largest possible up to 48" with superstructures up to 6 feet. Provide two 36” fixtures for hoods with eight-foot superstructure.

c. Include lamps with fixtures.

d. Illumination level: 80 foot-candles at work surface level.

e. At explosion proof fume hoods provide incandescent explosion proof light: 4.5” hubs; without guard. UL listed code 844, up to 250 volts, fits all incandescent bulbs up to 300 watts PS25. Lamp compartment shall be factory sealed from wiring chamber, Cast aluminum housing, head, and impact resistant globe.

e. Special ADA requirement: Switch reachable by both an able bodied as well as wheel chair bound individual.

18. Electrical services: Three wire grounding type GFI receptacles rated at 120 VAC at 20 amperes, gray acid resistant thermoplastic. Flush plates: Type 302 stainless steel. Provide two factory installed duplex outlets per hood, one on each post outside of fume hood cavity. All electrical devices provided by fume hood manufacture shall be by the same manufacture as provided by the Electrical Contractor. Fume hoods shall be prewired to top of hood.

    a. At explosion proof fume hoods provide explosion proof tumbler switches, front loaded, malleable iron body and cover, dust ignition proof, 20 amp, 120-277 VAC, 1 HP at 120VAC; 2 HP at 240 VAC. 1-pole switch, single gang, dead-end 1/2” hub size.

    b. At explosion proof fume hoods provide explosion proof receptacles; aluminum receptacle and malleable iron mounting box, 20 amp, 125 VAC, 1 HP. Single gang, 2 wire, 3 pole, 1/2” hub size (one opening). Class 1, groups C&D, Class II, Groups F&G, Class III. Additionally, provide two plugs acceptable for use with the explosion proof outlets.

19. Work surfaces in fume hoods:

    a. Epoxy Resin to match adjacent laboratory counter top color. 1-1/4” thick surface, dished a nominal one-half inch to contain spills. Front raised no more than 1/2”. Worktops to incorporate a secondary trough flush with work surface to allow for additional spill containment not secured by dished work surface alone.

    b. Sinks in Fume Hoods, where called for, shall be epoxy resin or stainless steel, matching color of adjacent countertop color, with perforated stainless steel cover, fitted flush to top of work surface. Provide thumb hole for easy removal of stainless steel cover. Provide sink with water fittings and strainer to match those at standard lab sinks.

E. ADA Base Cabinets - Special ADA requirement:

1. For use at fume hoods indicated in the drawings to be ADA compliant units.

2. Provide base cabinets to locate work surface at a nominal 34” working height.

   a. Outer base cabinets: Acid storage units.

      1. Construct units to allow access for forwarded-mounted cupsink locations.

      2. Line cabinets with 1/4” thick acid resistant Portland cement fume hood liner.

      3. Bypass vent cabinets as indicated in section titled ‘Base cabinet ventilation’ above.

      4. Units shall contain a bottom tray on full extension guides to allow tray to be totally pulled out of unit for access. Tray shall support a 50-lb. load.

   b. Base Cabinets: Cold rolled, steel construction following standard cabinet specification guidelines. Finish: Match standard base cabinets.

F. Metal Finish: Finish performance requirements shall be the same as previously specified for painted steel casework.

   1. Preparation: Spray clean metal with a heated cleaner/phosphate solution, pretreat with iron phosphate spray, water rinse, and neutral final seal. Immediately dry in heated ovens, gradually cooled, prior to application of finish.

   2. Application: Electrostatically apply powder coat of selected and bake in controlled high temperature oven to assure a smooth, hard satin finish. Surfaces shall have a chemical resistant, high-grade laboratory furniture quality finish of the following thickness:

      a. Exterior and interior surfaces exposed to view: 1.5 mil average and 1.2 mil minimum.

      b. Backs of cabinets and other surfaces not exposed to view: 1.0 mil average.

   3. Color: Color of fume hood and ceiling enclosures shall be selected by architect from manufacturer’s standard line of colors.

G. Quality Control Testing of Fume Hood Performance (Factory & Field Testing)

1. Factory Testing: Evaluation of manufacturer's standard product shall take place in manufacturer's own test facility, with testing personnel, samples, apparatus, instruments, and test materials supplied by the manufacturer at no cost to the Owner. Perform factory testing in accordance with ASHRAE 110-95.

2. Submit test report consisting of the following test parameters and equipment for each hood width and configuration specified.

3. Hood shall achieve a rating of 4.0 AM 0.05 PPM or better, tested to ASHRAE-110-R.

4. Factory Test facility: Sufficient size to provide unobstructed clearance of five feet each side and ten feet in front of fume hood. Provide make-up air to replace room air exhausted through fume hood and to obtain a negative 0.2" w.g. room pressure. Introduce make-up air in a manner that minimizes drafts in front of hood to less than 20% of the face velocity. Connect 100 feet per minute air velocity through face of fume hood. Adjustment in blower shall vary face velocity down to 75 feet per minute.

    a. Examine facility to verify conformance to the requirements of this Section.

    b. Test room shall be isolated from all personnel during test procedure.

5. Testing equipment:

    a. Properly calibrated hot wire thermal anemometer probes equal to Sierra model 600-02; correlate with computer data acquisition format to provide simultaneous readings at all points.

    b. Pilot tube and inclined manometer with graduations no greater than 0.2 inch of water, equal to F.W. Dwyer model 400. Calibration curves based on 20. Pilot traverse readings and correlated to a digital readout indicator to provide quick and accurate adjustment of airflows.

    c. Tracer gas: Sulfur hexafluoride supplied from a cylinder at a test flow rate of four liters per minute.

    d. Ejector system: Tracer gas ejector equal to IHE no. 525-014. Submit sufficient proof of ejector system calibration.

    e. Critical orifice: Sized to provide tracer gas at four liters per minute at an upstream pressure of 30 PSIG.

    f. Detection instruments: Ion track model 61 leak meter leak meter sulfur hexafluoride detector instrument.

g. Recorder with an accuracy better than plus or minus 0.5% of full scale.

h. Three dimensional mannequin, overall height 67", clothed in a smock.

i. Titanium tetrachloride glass modules. CAUTION: Titanium tetrachloride is corrosive and irritating; skin contact or inhalation shall be avoided.

j. One dozen 30-second smoke bombs.

k. Minihelic dial type static pressure gauge.

6. Preliminary Test and Data:

a. Provide sketch of room indicating room layout, location of significant equipment, including test hood and other hoods. Provide sketch of air supply system indicating type of supply fixtures.

b. Reverse air flows and dead space:

1. Swab strip of titanium tetrachloride along both walls and floor of hood in a line 6" behind and parallel to the hood face, and along the top of the face opening. Swab an 8" diameter circle on the back of the hood. All smoke should be carried to the back of the hood and exhausted.

2. Test the operation of the bottom air bypass airfoil by running the cotton swab under the airfoil.

3. If visible fumes flow out of the front of the hood, the hood fails the test and receives no rating.

c. Face velocity measurements: Face velocity shall be determined by averaging minimum of four and maximum of eight readings at the hood face. Take readings at center of a grid made up of sections of equal area across the top half of the face and sections of equal area across the bottom half of the face. Take simultaneous readings at each point with a series of calibrated hot wire anemometers over a one-minute period of time. Probes shall be correlated to a computer data acquisition package, which will provide an average of each reading over that one-minute period and also an overall average. During the one-minute monitoring period, all velocities must automatically update average at a maximum of four-second intervals.

7. Test Procedure:

a. Check sash operation by moving sash through its full travel. Verify that sash operation is smooth and easy, and that vertical rising sash

shall hold at any height without creeping up or down. Position sash at the full open position for all subsequent tests.

b. Measure exhaust airflow with the baffles positioned to give maximum airflow. Measure exhaust airflow with the baffles positioned to give minimum airflow. Verify that the air volume at minimum airflow is not less than 95% of the exhaust air volume at maximum airflow. Hoods exceeding this fail the test and receive no rating.

c. Take a static pressure reading, using methods assuring an accurate reading, in an area of the ductwork no more than three feet nor less than one foot above the exhaust collar. Static pressure loss shall not exceed values given under Design Requirements stated elsewhere in this Section.

d. Install ejector in test positions. For a typical bench-type hood, three positions are required: left, center and right as seen looking into the hood. In the left position the ejector center line is 12" from the left inside wall of the hood; center position is equal distance from the inside sidewalls; and the right position is 12" from the right inside wall. The ejector body is 6" in from the hood face in all positions. Location of ejector may require modification for hoods of unusual dimensions.

e. Install mannequin positioned in front of the hood, centered on the ejector.

f. Fix detector probe in the region of the nose and mouth of the mannequin. Take care that method of attachment of the probe does not interfere with the flow patterns around the mannequin. Locate nose of the mannequin 9” in front of ejector (3” in front of sash).

g. Open tracer gas block valve. Correlate readings with a computer data acquisition package, which is capable of monitoring and visually recording a minimum of one reading per second for a minimal three minute time period at each of the three positions.

h. The control level rating of the hood shall be the maximum of the three average values for the three test positions.

i. Record performance rating of the fume hood as XXAMyyy, where XX equals the release rate in liters per minute (4.0) and AM represents the as manufactured test sequence and yyy equals the control level in parts per million.

j. Record and submit average face velocity, static pressure, and total exhaust CFM for sash positions from 1/2 open to closed in 2-inch increments. Total variation in face velocity, static pressure, and exhaust

CFM shall be in accordance with fume hood general design requirements specified herein.

k. All data on the above test conditions including instrumentation and equipment, test conditions, preliminary test and data information shall be provided on a one page report, including a printout of the average face velocities, and a separate graph-type performance curve on all three tracer gas positions.

l. Ignite a smoke bomb within the fume hood work area to verify that the fumes are quickly and efficiently carried away. Move the lighted bomb about the fume hood work area, checking near fume hood ends and work surface to verify that there is no reverse flow of air at these locations.

m. All fume hoods:

1. Conduct test as outlined above with the sash open.

2. Ignite a smoke bomb within the fume hood work area to verify that the fumes are quickly and efficiently carried away. Move the lighted bomb about the fume hood work area, checking near fume hood ends and work surface to verify that there is no reverse flow of air at these locations.

H. Fume Hood Schedule: Refer to sheet IL001.

2.15 BUTCHER PAPER DISPENSERS (**PRD "x")** x = length on plans

A. Provide and install undercounter and wall mounted butcher paper dispensers where shown on the drawings. Dispensers shall accommodate a roll of standard white butcher paper. Provide dispenser size (width) as called for on the drawings. Dispenser shall be all steel construction and shall include paper roll rod and steel cutting edge across the full width of the dispenser. Cutting edge shall be spring loaded, keeping the cutting edge in contact with the butcher paper roll regardless of the amount of paper on the roll. Provide 2 rolls of paper with each dispenser.

B. Manufacturer: Bulman, model # A-520, or equal manufacturer. Provide units for undercounter mounting applications shown including but not limited to undercounter mounting at mobile tables and fixed counters, or wall mounted on 16" wide x 48" long plastic laminate covered 3/4" plywood base where indicated in drawings.

PART 3 - EXECUTION

3.1 EXAMINATION

A. Verify all equipment rough-in conditions and requirements.

B. Coordinate with other trades for the proper and correct installation of plumbing and electrical rough-in, structural backing for items attached to walls, and for rough opening dimensions required for the installation of products in this section.

C. Examine substrate surfaces and associated work and conditions under which work will be installed. Do not proceed until unsatisfactory conditions have been corrected in a manner complying with the Contract Documents and acceptable to the Installer. Starting of work within a particular area will be construed as installer's acceptance of surface conditions.

3.2 INSTALLATION

A. General Requirements

1. Install in accordance with manufacturer's instructions.

2. Install in accordance with standards required by the governing codes.

3. Sequence installation to ensure utility connections are achieved in an orderly and expeditious manner.

4. Touch-up minor damaged surfaces caused during installation. Replace damaged components as directed by Architect.

5. Equipment in this section shall be installed with all necessary fittings mounted for final connection by Divisions 22, 23 and 26.

B. Casework Installation

1. Install plumb, level, true and straight with no distortions. Shim as required, using concealed shims. Where laboratory casework abuts other finished work, scribe and apply filler strips for accurate fit with fasteners concealed where practicable.

2. Base cabinets: Set cabinets straight, plumb, and level. Adjust set tops within 1/16" of a single plane. Fasten each individual cabinet to floor at toe space, with fasteners spaced 24" o.c. Bolt continuous cabinets together with joints flush, tight and uniform, and with alignment of adjacent units within 1/16” tolerances. Secure individual cabinets with not less than 2 fasteners into floor, where they do not adjoin other cabinets.

3. Secure wall cabinets to solid supporting members such as wall studs with concealed wall blocking, CMU, etc.

4. Abut top edge surfaces in one true plane. Provide flush joints not to exceed 1/8” between top units.

C. Countertop Installation

1. Where required due to field conditions, scribe to abutting surfaces.

2. Field jointing: Only factory prepared field joints, located per approved shop drawings, shall be permitted. Secure joints in field, where practicable, in same manner as in factory, with dowels, splines, adhesives, or fasteners recommended by manufacturer. Locate field joints as shown on accepted shop drawings, factory prepared so there is no jobsite processing of top and edge surfaces.

3. Secure work surfaces to casework and equipment components with material and procedures recommended by the manufacturer.

4. Fastenings: Use concealed clamping devices for field joints, except for natural stone, composition stone, and epoxy tops, located within 6" of front, at back edges and at intervals not exceeding 24". Tighten in accordance with manufacturer's instructions to exert a constant, heavy clamping pressure at joints. Except for natural stone, composition stone and epoxy tops, secure tops to cabinets with "Z" type fasteners or equivalent, using 2 or more fasteners at each front, end, and back.

   a. For epoxy tops, secure to cabinets with epoxy cement applied at each corner and along perimeter edges of not more than 48" o.c.

5. Flatness: All installed counters shall have a flatness of no more than 1/16” per 6 linear feet of run. All counters shall be examined for flatness prior to installation and those that cannot meet this level of flatness shall be replaced by the contractor. Shims shall not exceed 1/8”.

6. Workmanship: Abut top and edge surfaces in one true plane, with internal supports placed to prevent any deflection. Provide flush hairline joints in top units using clamping devices. At joints, use manufacturer's recommended adhesives and holding devices to provide joint widths not more than 1/16" wide at any location, completely field and flush with abutting edges.

   a. Where necessary to penetrate tops with fasteners, countersink heads approximately 1/8" and plugholes flush with material equal

in chemical resistance, color, hardness, and texture to top surface.

b. After installation, carefully dress joints smooth, remove any surface scratches, clean and polish entire surface.

c. Provide holes and cutouts as required for mechanical and electrical service fixtures.

d. Provide scribe mountings for closures at junctures of top, curb and splash with walls as recommended by manufacturer for materials involved. Use chemical resistant, permanently elastic sealing compound where recommended by manufacturer.

D. Fume Hood Installation

1. Install laboratory fume hoods at locations indicated on drawings, in accordance with approved shop drawings and schedules and according to manufacturer's recommendations.

2. Provide all openings and do all drilling of laboratory furniture necessary for the installation of sinks, cup sinks, service fixtures, electrical service fixtures, conduit fittings and ducts.

3. Install in accordance with codes, regulations and standards required by the authority having jurisdiction.

4. Seismic Restraints: The hood manufacturer shall install the hoods to resist seismic loading as required by the local governing codes. Install all anchorage devices, including special legs and or braces, required for seismic restraint of hoods to satisfy all governing code requirements for seismic anchorage of equipment.

5. Field Quality Control Testing of Fume Hoods (as installed): Additionally, the hood manufacturer shall perform field testing of all fume hoods to ensure that the fume hood and HVAC air flow system complies with all requirements. Field testing shall be accomplished in accordance with the requirements above as outlined in sections G1 through G7, and the additional requirements noted below. This field-testing shall be performed with the owner, commissioning consultant, architect and mechanical engineer present.

a. Field Testing Requirements:
1. Perform tests in field to verify proper operation of the fume hoods before they are put in use, using only qualified personnel.
2. Perform tests after installation is complete, the building ventilation system has been balanced, all connections

have been made, and written verification has been submitted that the above conditions have been met.

3. Verify that the building make-up air system is in operation, the doors and windows are in normal position, and that all other hoods and exhaust devices are operating at designed conditions.
4. Correct any unsafe conditions disclosed by these tests before request of test procedures.
5. Provide the Architect and Owner with a record of all tests.

b. Testing Equipment: Properly calibrated hot wire thermal anemometer equal to Alnor Model No. 8500-1 Compuflow.

c. Test Procedure:

1. Perform field-testing in accordance with SEFA LF1-1996. Fume hoods that do not perform to the requirements shall be re-tested following re-balancing of the HVAC system.
2. Check room conditions in front of fume hood using a thermal anemometer and a smoke source to verify that the velocity of cross drafts does not exceed 20% of the specified average fume hood face velocity. Eliminate any cross drafts that exceed these values before proceeding.
3. Perform the following test to verify conformance of actual fume hood face velocities to those specified. Turn on the exhaust system with the sash fully open. Determine the face velocity by averaging the velocity of six readings taken at the fume hood face; at the centers of a grid made up of three sections of equal area across the top half of the fume hood face and three sections of equal area across the bottom half of the fume hood face. If not in accordance with the specifications and drawings, refer to the manufacturer's troubleshooting guide for aid in determining the cause of variation in airflow.
4. Field testing of airflow in fume hoods: Turn on the exhaust system. With sash in open position, check airflow into the fume hood using a cotton swab dipped in titanium tetrachloride or other smoke source. Verify that airflow is into the fume hood over the entire face area by a complete traverse of the fume hood 6" inside the face. Reverse flow is evident of unsafe conditions. Take necessary corrective actions and retest. Move smoke throughout the fume hood directing smoke across the work surface and against the sidewalls and baffle. Verify that smoke is contained within the fume hood and rapidly exhausted.

E. Sink Installation:

1. Sinks which were not factory installed shall be set in chemical resistant sealing compound and secured and supported per manufacturer's recommendations.

F. Accessory Installation: Install accessories and fittings in accordance with manufacturer's recommendations. Turn screws to seat flat; do not drive.

3.3 ADJUSTING

A. Adjust operating equipment, with the exception of air-moving equipment, to efficient operation for its intended use, and as required by the manufacturer.

B. Make final adjustments to laboratory casework, including doors, drawers hardware, fixtures and other moving or operating parts to ensure proper and smooth operation.

C. Adjust fume hood sashes, fixtures, accessories and other moving or operating parts to function smoothly

3.4 CLEANING

A. Clean equipment, casework, countertops and all other surfaces as recommended by the manufacturer, rendering all work in a new and unused appearance. Touch up as required.

B. Clean adjacent construction and surfaces which may have been soiled in the course of installation of work in this section.

C. Clean countertops with diluted dishwashing liquid and water leaving tops free of all grease and streaks. Use no wax or oils.

3.5 PROTECTION OF FINISHED WORK

A. Provide all necessary protective measures to prevent exposure of equipment and surfaces from exposure to other construction activity.

B. Advise general contractor of procedures and precautions for protection of material and installed equipment and casework from damage by work of other trades.

3.6 DEMONSTRATION

A. Provide systems training and demonstration of all equipment operations, functions and calibration process, for a duration of at least 8 hours.

B. Fume hoods: Following successful field testing of fume hoods, fully demonstrate fume hood operation, including sash operation, plumbing and electrical service fixture and fitting operation, and operation of the fume hood warning and alarm system.

Refer to Commissioning Specification for training requirements for specific systems and equipment. Training of the Owner's operation and maintenance personnel is required in cooperation with the Commissioning Consultant. Commissioning Specification lists the specific systems and equipment. A training agenda shall be prepared by the Contractor and approved by the Owner prior to training performance.

END OF SECTION 12 34 50

SECTION 13 08 00

TEMPERATURE CONTROLLED ROOMS

PART 1 - GENERAL

1.1 SCOPE OF WORK

A. Furnish and install walk-in refrigerated/freezer room assemblies, complete with all associated equipment, switches, evaporators, valves, defrost equipment, receptacles, lights, conduit, wire, piping, materials, components, systems, etc., and other appurtenances and assemblies as required for a complete, operating system.

1. The walk-in refrigerated/freezer room manufacturer shall provide the above assembly prewired to a junction box (junction box by division 26) in wall above the refrigerated/freezer rooms.

2. The walk-in refrigerated/freezer room manufacturer shall provide the above assembly pre-plumbed to locations that shall be determined in the field through coordination between the manufacturer and related trades.

B. Work included (Contractor furnished & Contractor installed)

1. Special Procedure Cooler	**ME8**
2. Freezer	**ME9**
3. Body Cooler	**ME7**
4. Body Racking System	**ME4**
5. Freezer	**B9**

1.2 RELATED DOCUMENTS: The completion of the work described in this Section may require work in or coordination with other Sections of these specifications. The Contractor and the subcontractor will be responsible for identifying and including all related work in other Sections of these specifications and/or drawings necessary for a complete installation of the work described in this Section. These related sections include, but are not limited to the following:

A. Drawings and general provisions of Contract, including General and Supplementary Conditions and Division 1 Specification Sections apply to this Section.

B. Refer to Divisions 22, 23 and 26 and the mechanical and electrical drawings for related work.

C. System commissioning is a part of the construction process. Documentation and testing of systems, as well as training of the Owner's operation and maintenance personnel, is required in cooperation with the Commissioning Consultant. Substantial Completion is dependent on successful completion of all commissioning procedures, documentation, and issue closure. Refer to Commissioning of Systems Specification in Division 1 for detailed commissioning requirements.

1.3 QUALITY ASSURANCE

A. Single source responsibility: All systems and components which comprise the walk-in refrigerated/freezer rooms shall be designed, fabricated and assembled by a single manufacturer.

B. Manufacturer's qualifications: Modern plant with proper tools, dies, fixtures and skilled workers to produced high quality walk-in refrigerated rooms, and shall meet the following minimum requirements:

1. Five years or more experience in manufacture of the specified product.
2. Installers shall be factory certified by manufacturer.

C. Coordination: The supplier/installer shall coordinate the installation of all products under this section and shall coordinate the installation and rough-in sizes and locations for all utilities required for walk-in refrigerated/freezer rooms. The manufacturer shall coordinate all electrical requirements with the electrical contractor.

D. Architect may wish to inspect products at the manufacturer's factory prior to shipment. Products found not to be in conformance with requirements of the contract documents may be rejected.

1. Company Field Advisor: A company field advisor shall be on site supervising installation of the walk-in coolers and freezers, including all equipment necessary for the proper operation of the walk-in unit. Shall be an employee of the manufacturer. Additionally, the field advisor shall be certified in writing by the manufacturer to be technically qualified in the design, installations, and servicing of the required products. Installers: Installation of the equipment specified under this section shall be undertaken by the manufacturer's crew of installers, or a crew if installers who are approved in writing by the manufacturer. In either case, the installation of equipment specified under this section shall remain the responsibility of the manufacturer

as a subcontractor to the general contractor.

E. Each walk-in unit shall be classified by Underwriter's Laboratory, Inc. and approved by Factory Mutual and/or Underwriter's Laboratory. All electrical components shall also be UL listed.

F. Install all equipment in accordance with the National Electric Code and the Electrical drawings and specifications.

G. Agency Approvals: All work shall comply with National Sanitation Foundation Standard No. 7. The NSF label shall be affixed to the interior door pans. Interior corners and floor shall be coved to meet NSF specifications. The panels shall be UL listed with a fire hazard classification according to ASTM E-84. The panels shall be certified with UL label.

1.4 DELIVERY, STORAGE, AND HANDLING

H. Deliver, store, protect and handle products on the site in such a manner as to minimize the risk of damage, decay, deterioration or loss from theft.

I. All products shall be delivered to the job site in manufacturer's original unopened containers, crates or protective wrappings with the manufacturer's name and address clearly labeled thereon.

J. Accept products on site and inspect on arrival for damage.

1.5 SUBMITTALS

A. General: Submit the following in accordance with Conditions of the Contract and Division 1 Specification Sections.

B. Product Data: Manufacturer's catalog sheets, specifications, utility and service requirements and locations, and installation instructions for each item specified.

C. Quality control Submittals:

1. Company Field Advisor Data:

a. Name, business address and telephone number of Company Field Advisor secured for the required services.
b. Certified statement from the Company listing the qualifications of the Company Field Advisor.

2. List of Completed Installations: If brand names other than those specified are proposed for use, furnish the name, address, and telephone number of at least 4 comparable installations which can prove the proposed products have performed satisfactorily for 5 years.

D. Shop Drawings: Provide two electronic copies in PDF format of drawings showing wall and ceiling panel layout, light fixture layout, door locations, locations for control panels, floor recess depth, monitoring devices, electrical diagrams, etc. Include all applicable details for fabrication and erection, including panel, door, door hardware, and electrical details.

E. Structural Calculations: Submit structural calculations, including seismic design, lateral and vertical load calculations required by governing codes and authorities having jurisdiction, prepared and sealed by a structural engineer licensed in the state of the project, for review by the project structural engineer. This structural engineering shall include the necessary reinforcement within the refrigerated room walls, floors and ceilings required for support and anchorage of all cooler/freezer equipment items imposing live and dead loads on the cooler structure, negative pressure outside the cooler, seismic design, and other requirements of this specification.

F. Guarantee: In addition to the general contractor's guarantee for all work, furnish an additional guarantee for a period of five years after acceptance of the work that each walk-in unit will furnish the full range of temperatures specified. Make all repairs as required and replace all equipment as required to meet this guarantee.

G. Contract Closeout Submittals: As required by General Conditions.

H. Operation and Maintenance Data: Deliver 2 copies, covering the installed products, to the Architect.

I. Contract Closeout Submittals:

J. Operation and Maintenance Data: Deliver 2 copies, covering the installed products, to the Architect.

1.6 COORDINATION

A. Verify that field measurements are as indicated on shop drawings or as instructed by the manufacturer. Coordinate final openings, sizes and

electrical and plumbing utility rough-in sizes and locations with the appropriate trades.

PART 2 - PRODUCTS

2.1 ACCEPTABLE PRODUCTS

A. Subject to compliance with these specifications, provide products as manufactured by Mortech Manufacturing; 411 North Aerojet Avenue, Azusa, Ca. 91702 www.mortechmfg.com (Phone: 800-410-0100), or equal products from other manufacturers pre-approved in writing 10 days prior to bid date: Mortech Manufacturing; www.mortechmfg.com

2.2 MATERIAL

A. General Requirements: Furnish and install complete walk-in refrigerated room unit, including insulated panels, refrigeration compressor, controls and all accessory components necessary for complete and operational refrigerated room. System and components shall be manufactured by a company with at least 5-years' experience in the design and production of walk-in refrigeration systems.

1. Walk-in Refrigerated Room (Body Cooler): **Equipment Number ME8.** Special Procedure Cooler room number **125A**. Provide 1 body cooler including gurneys and body trays specified in Section 117810.

    a. Size: 22'-6" x 13'-5" outside dimensions approximately, GC to verify size in field, refer to lab floor plans for layout.
    b. Ceiling Height: 10'-0" clear, inside dimension. (8'-2" clear below internal cooling equipment located per lab floor plans **KN-93**)
    c. Door Size: 60" w x 84" tall (Electric Sliding Door)
    d. Condensing Unit: (2) Design-build by cold room contractor
    e. Evaporator Coils: (2) Design-build by cold room contractor
    f. Desiccant Dryer: (1) Design-build by cold room contractor
    g. No floor required, walk-in refrigerated room to be placed on concrete slab on grade.

2. Walk-in Freezer Room (Body Freezer): **Equipment Number ME9**, Freezer room number **125B.** Provide 1 freezer including gurneys, and body trays specified in section 117810.

    a. Size: 22'-6" x 18'-6" outside dimensions approximately,

GC to verify size in field, refer to lab floor plans for layout.

b. Ceiling Height: 10'-0" clear, inside dimension. (8'-2" clear below internal cooling equipment located per lab floor plans **KN-93**)
c. Door Size: 48" w x 84" tall (Hinge Swing Door) with heated S/S threshold and perimeter heat for freezer conditions. Threshold to make a smooth transition from freezer to concrete floor of Body Cooler.
d. Condensing Unit: (2) Design-build by cold room contractor
e. Evaporator Coils: (2) Design-build by cold room contractor
f. Desiccant Dryer: None
g. Floor required 4 3/4" insulated panel floor required. Recess pit to match floor depth and level within 1/8".

3. Walk-in Refrigerated Room (Body Cooler): **Equipment Number ME7**, Body Cooler room number **125**. Provide 1 body cooler including gurneys, body trays specified in 117810 and racking system.

   a. Size: 38-0" x 31-6" inside dimensions approximately, GC to verify size in field, refer to lab floor plans for layout.
   b. Ceiling Height: 10' clear, inside dimension. (8'-2" clear below internal cooling equipment located per lab floor plans **KN-93**)
   c. Door Size: 60" w x 84" tall (Electric Sliding Door)
   d. Condensing Unit: (2) Design-build by cold room contractor
   e. Evaporator Coils: (4) Design-build by cold room contractor
   f. Desiccant Dryer: Munters HC-300
   g. No floor required, walk-in refrigerated room to be placed on concrete slab on grade.

4. Walk-in Freezer Room (Biology Freezer): **Equipment Number B9**, Freezer room number **213C.** Shelving is specified in Division 11.

   a. Size: 8'-8" x 15'-8" outside dimensions approximately, GC to verify size in field, refer to lab floor plans for layout.
   b. Ceiling Height: 10'-0" clear, inside dimension. (8'-2" clear below internal cooling equipment located per lab floor plans **KN-93**)
   c. Door Size: 48" w x 84" tall (Hinge Swing Door) with heated S/S threshold and perimeter heat for freezer conditions. Threshold to make a smooth transition from freezer to concrete floor.
   d. Condensing Unit: (2) Design-build by cold room contractor

e. Evaporator Coils: (2) Design-build by cold room contractor
f. Desiccant Dryer: None
g. Floor required 4 3/4" insulated panel floor required. Recess pit to match floor depth and level within 1/8".

B. Refrigeration System: All rooms shall be provided with mechanical cooling systems as specified herein. The refrigeration system shall be an integral part of the control and conditioning system. Compressor/condensing units shall be located as indicated on the contract drawing and shall be suitable for outdoor operation.

1. Redundant Systems: Provide identical redundant systems with automatic switchover devices, which will automatically switch from one system to the other and back at programmed intervals. The switchover device shall be automatically activated when one operating system malfunctions and as indicated elsewhere in this specification.

2. System shall be of the hermetic or scroll industrial type design. Include all components necessary to accomplish effective, efficient, serviceable installation. System shall consist of, but not be limited to, hermetic or scroll compressor, receiver, air cooled condenser, evaporator, moisture indicating sight glass, liquid filter-drier, dual pressure controls, crankcase pressure regulator, suction accumulator, suction line filter, liquid solenoid valves, expansion valve, oil level sight glass, manual shut-off valves, condenser head pressure control valve (flooded condenser type), and all integral piping and wiring system shall be capable of operating at low ambient temperature.

3. Separate and independent air-cooled refrigeration systems shall be provided for each walk-in unit. The manufacturer/supplier shall calculate and provide the proper size of compressors and blower coils based on loads determined from the drawings in terms of number of items stored, performance requirements of this specification and normally expected usage of walk-in units in a lab facility.

4. Compressors shall be roof mounted. Refer to plan drawings for locations.

5. Locate condensers/condensing units on the roof. Verify exact locations with general contractor, architect and engineer. Refer to electrical drawings for the size and type of circuit breakers

required for each walk-in unit. Make all necessary attachments to the building structure for installation of equipment and provide all required interfacing steel. Submit details in submittal package. Roof curbs or housekeeping pad by others.

C. Temperature Requirements:

1. Refrigerated Rooms: Operating temperature shall be maintained in a range as indicated by Owner: Cooler temperature shall maintain throughout at plus or minus 2 degrees F from set point. Critical low and high alarm temperature range settings are 34 low and 44 high degrees F.

2. Freezer Room: Operating temperature shall be maintained in a range as indicated by Owner: Freezer temperature shall maintain throughout at plus or minus 2 degrees F from set point. Critical low and high alarm temperature range settings are minus 5 low and 18 high degrees F.

D. Panels: Standard wall and ceiling panels shall be nominal 2-feet and 4-feet in width, and shall be interchangeable with like panels. Corner panels shall be 90-degree angles. Nominal 1-foot and 3-feet wide panels and 12” x 6” corners may be used if required to meet job site conditions.

1. Panel construction: Foamed-in-place urethane insulation sandwiched between interior and exterior metal skin, which has been die-formed and gauged for uniformity in size. Edges of panels shall be foamed-in-place tongue and groove with locking devices foamed-in-place at time of fabrication.

2. Metal skin material:

a. Exterior walls: 26-gauge stucco embossed steel finish and 22 gauge type 304 stainless steel with #4 finish where exposed to view.
b. Interior walls: 22 gauge type 304 stainless steel with #4 finish.
c. Interior floor finish: 16 GA stainless steel. 2B finish **(Freezer Only)**

3. Insulation: Each panel shall be completely filled with CFC free rigid foamed-in-place urethane with the following physical characteristics:

a. Thermal conductivity (K factor): 0.14 BTU/hr/sq. ft./degrees F/inch.
b. Overall coefficient of heat transfer (U factor): Not more than 0.030.
c. R factor: 30.
d. Closed cell structure: 97%.
e. Average in-place density: 2.3 lbs./cu.ft.
f. Compressive strength at yield point: 18 lbs./sq. in.
g. Overall thickness: 3.5-inches for framed panels, 4" for frameless panels.
h. Fire hazard classification: ASTM E-84.
I. Underwriters Laboratory label: UL-723.
j. Flame spread rating: 25 or less.
k. UL Listed.
l. Toxicity Rated.
m. Factory Mutual or UL approved

4. Locking assembly: Assembly of panels shall be accomplished by cam-type locking action. Cam-type lock shall be foamed-in-place and activated by a hex wrench provided by the manufacturer. Access ports to the locking devices shall be provided from the interior to allow assembly of the unit from the inside. Access ports to locking devices shall be covered by snap caps.

5. Panel section gaskets: Shall be NSF listed. On frameless panels vinyl gaskets shall be foamed in place on the interior and exterior edges of the tongue rails. On framed panels closed cell foam gaskets shall be applied to the interior and exterior edges of the tongue rails. Gaskets shall be impervious to stains, greases, oil and mildew.

6. Provide reinforcement within cooler/freezer walls, floors when indicated and ceilings required for support and anchorage of all cooler/freezer equipment items imposing live and dead loads on the cooler/freezer structure, other items anchored to panels, design, negative pressure outside the cooler/freezer, required seismic design, and other requirements of this specification.

7. Ceiling Panels: Main body cooler will require a self-supported ceiling. Ceiling panels are to be 5" thick and "I beam" support to be no taller than 8" with a max of 12" of clearance for installation.

8. Floor panels **(Freezer Only**): Floor panels shall be fabricated

similar to other panels, except reinforced and designed to withstand uniformly distributed loads of 700 pounds per square foot. The floor panels shall be recessed so that the finished floor elevation matches the adjacent floor elevation.

9. Non-slip abrasive flooring: Provide adhered non-slip abrasive flooring, at all walking surfaces within the freezer room.

E. Entrance door and panel (Hinged Doors). Where indicated on plan drawings.

1. General requirements and construction: Doors shall be stainless steel flush type entrance doors, manually operated side-hinged, with swings as shown on the drawings. Door opening size: 4'-0" wide x 7'-0" tall. Door shall be finished in stainless steel inside and out. Thickness and finish of stainless steel and thermal characteristics of the insulated door shall match the cooler/freezer wall panel construction. All doors shall be listed by Underwriters Laboratories, and be equipped with the following:

a. Hardware: Equip each door with magnetic gasket to form an airtight seal at the sides and top of door. Provide an adjustable sweep gasket at the bottom edge of the door. Hardware shall include keyed locks from the adjacent spaces for security and a panic safety release from the interior to prevent entrapment of personnel within the unit (also refer to other special features below). Provide polished chrome, strap type, cam-lift hinges. Gasket shall be dual blade flexible wiper type to form a tight seal. Gaskets shall be replaceable, resistant to oils, fats, water and detergents, and shall be NSF approved. Hinges shall be slow action, spring loaded self-closing, 3 per door. All hardware shall be ADA compliant in design and in mounting height.

b. Jamb: Jamb and door perimeter shall be made of fiberglass reinforced, ABS plastic or Vinyl. An isolated, low wattage heater wire covered by magnetically attracting stainless steel shall be fitted onto this jamb. This shall provide perfect sealing of magnetic gasket and prevent frost and condensation build-up.

c. Each entrance door shall be provided with a compact fluorescent type vapor proof light, switch with pilot light and interconnecting wiring harness. Concealed wiring

shall be standard on each entrance door.

d. View panel: Provide insulating 14” x 14” triple glazed removable glass view lite with non-heated frame on coolers and with heated frame on freezer only.

e. Kick plate: Provide 16 GA. stainless steel kick plate on both sides of all doors to cooler/freezer. Kick plate to be 48” high by width of door.

F. Entrance door and panel: (Automatic, Sliding Door): Provide sliding door systems from Jamison, Edey, R-Plus or equal. Where indicated on plan drawings.

1. General requirements and construction: Doors shall be stainless steel inside or outside mounted entrance doors, automatic, electrically operated, single horizontal sliding electric (SHSE) with safety devices, as shown on the drawings. Door opening size: 5’-0 wide x 7’-0” tall. Door shall be finished in stainless steel inside and out. Thickness and finish of stainless steel and thermal characteristics of the insulated DOOR shall match the cooler wall panel construction. <u>All doors shall have UL listed components</u> and be equipped with the following:

a. Hardware: Equip each door with gasket to form an airtight seal at the sides and top of door and anti-sweat perimeter heater for cooler. Provide a bulb gasket at the bottom edge of the door. Hardware shall include HASP lock from the adjacent spaces for security and a safety release from the interior to prevent entrapment of personnel within the unit (also refer to other special features below). Gasket shall be flexible bulb type to form a tight seal. Gaskets shall be replaceable, resistant to oils, fats, water and detergents, and shall be NSF approved. All hardware shall be ADA compliant in design and in mounting height.

b. Kick plate: Provide 16 GA. stainless steel kick plate on both sides of all doors to cooler/freezer. Kick plate to be 48” high by width of door.

c. Jamb: Door jamb shall be made of reinforced fiberglass, ABS plastic, or vinyl. No visible fasteners

shall be used to secure the jamb to the door opening. Door jamb shall be coved to facilitate ease in cleaning. An isolated, low wattage heater wire protector shall be placed in door jamb. Provide sealing gasket around door perimeter to prevent frost and condensation build-up. Gasket shall be replaceable, resistant to oils, fats, water, and detergents, and shall be NSF approved.

d. Wall mounted, stainless steel push plate control system: Provide momentary-contact type wall plate actuator switch door operator control system. Engrave wall plate with 'press to open and/or close'. Provide push plates on both sides of each opening. Location to be easy access.

e. Safety feature for sliding doors: indicated below for each sliding door. Safety device shall stop door movement if the door (either the leading edge or opposite back end) contacts objects which may be in the way. The sensitivity of the door safety features must be such that the door (moving or stationary) does not pose a safety hazard to personnel.

f. Safety device: Extra-sensitive electrical safety-reversing pressure sensitive edge. Provide extra-sensitive electrical safety-reversing pressure sensitive edges full height of door at both the leading end and back end of door. The edge strips shall stop the door and render the door inoperable if either end of the door contacts a person or an object.

g. Electrical interlocks: Unless units are equipped with self-protecting devices or circuits, provide electrical interlocks to prevent operation of doors when operation is prevented by lock, latch, door bolts or any other physical obstructions.

h. Provide adjustable time-delayed closing feature. Sliding doors shall close upon expiration of time delay relay. Time delay relay shall be adjustable between 2 and 30 seconds.

i. In the event of power failure, provide sliding door system with the ability to be manually operated. Provide manual disconnect with chain hoist operation that can be made operational from both sides of the door.

j. Motorized sliding door system shall be prewired.

k. Adjusting: After repeated operation of completed installation, equivalent to 1 day use by normal traffic (25-50 cycles), readjust door operators and controls for optimum operating condition and safety and for a weather tight closure. Lubricate hardware, operating equipment, and other moving parts

G. Closure panels, trim strips, wall protectors: Furnish and install material to enclose the areas between the building and walk-in units at ceilings and walls. Panels shall be fabricated from the same materials as the walk-in unit panels.

H. Wrap around jambs and heads: Furnish and install 16 gauge stainless steel plate closure panels formed to completely cover the jamb and head gaps that occur between the building wall and the cooler wall. Exposed edges of stainless steel closure members shall be rounded to avoid being a hazard.

I. Wall Protectors: Provide hat shaped 16 GA. stainless steel bumper rails at all sides of cooler. Bumper rail shall be 1” deep x 5” high, located and installed by cooler manufacturer.

J. Corner Guards: Provide 16 GA. stainless steel corner guards 6” x 6” x 60” high on all exposed exterior corners of walk-in refrigerated room.

K. Base Cove: Provide base cove, where specified, to seal walk-in at building floors, inside and out, to facilitate easy cleaning. Base cove shall be constructed of 16 GA stainless steel and match interior and exterior finish.

L. Light fixtures at Cooler: Provide 2-lamp, 48-inch long, sealed gasket 80 mA fluorescent lighting fixtures. Provide fixture layout sufficient to supply 40 foot-candles of illumination at 36-inches above the floor throughout the walk-in coolers and freezer. Fixtures shall be installed on the ceiling panels, and shall include an accessible junction box on the outside surface of the ceiling panel. Fixtures shall be UL listed for horizontal mounting in wet locations. Conduit and wiring shall be prewired, provided and installed by the cooler manufacturer as part of the walk-in refrigerated room assembly.

1. Materials:

a. Housing: Impact and UV resistant, reinforced polyester.
b. Metal parts: Die-formed from code gauge steel.

2. Diffuser: Acrylic, secured to fully gasket housing by captive, cam-action latches, 6 per fixture.

3. Ballast: Thermally protected, resetting, Class P, HPF type 1 ballast standard. Sound rating C, CBM approved in standard combinations. UL listed.

4. Wiring and Electrical: AWM, FTN or THHN wire used throughout, rated or required temperatures.

5. Finish: Five-stage, iron-phosphate pre-treatment insuring superior adhesion and rust resistance. All painted parts finished with high-gloss baked enamel.

6. Safety light controls to comply with OSHA and governing codes.

7. Power for lighting: 110 VAC; provide 3-way toggle switches with pilot light to enable lights to be operated from both entries when applicable. (To be confirmed by refrigerated room manufacturer.)

8. Voltage and other electrical characteristics shall be coordinated by the cooler manufacturer, electrical contractor and project electrical engineer.

9. Safety Light: Units shall be equipped with one 40W, vapor proof safety light fixture above each door.

10. Light switching: A light switch with pilot light shall be located on the exterior of the cooler near the entry door. An alternative light control may be to use

M. Light Fixtures Freezer: LED vapor proof light fixture, 48-inch long. Provide fixture layout sufficient to supply 30 foot-candles of illumination at 36-inches above the floor throughout the walk-in freezer. Fixtures shall be installed on the ceiling panels, and shall include an accessible junction box on the outside surface of the ceiling panel. Fixtures shall be UL listed for horizontal mounting in wet locations. Conduit and wiring shall be prewired, provided and installed by the cooler manufacturer as part of the walk-in refrigerated room assembly.

Materials:

1. Clear molded shatter proof high impact polycarbonate enclosure

2. 2-lamp, 36W, 0.3 amps, 2, 7773 lumens total output. 120VAC

3. Luminaire: Rating IP-65 for wet and cold environments.

4. Power for lighting: 110-120V; provide 3-way toggle switches with pilot light to enable lights to be operated from both entries when applicable. Switches and lights powered through control panel.

5. Voltage and other electrical characteristics shall be coordinated by the cooler manufacturer, electrical contractor and project electrical engineer.

6. Safety light: Units shall be equipped with one 40W, vapor proof safety light fixture above each door.

7. Switch and Pilot Light: A light switch with pilot light shall be located on the exterior of the cooler near the entry door.

N. Refrigeration Equipment:

1. Design: Refrigeration system shall be designed and sized by the refrigerated room manufacturer, based on the following sizing parameters:

a. All system capacities shall be sufficient to meet simultaneously and continuously the following: 1) Performance test requirements as specified in this section. 2) Infiltration from 10 door openings per 24 hour period, 15 seconds each; 3) Forced ventilation at 1 air change per hour.

b. Refrigeration system: A complete integrated system consisting of an evaporator and condensing unit. Heating output on demand proportioning basis in relation to the desired temperature control point.

c. Defrost system: Units designed for operation above 2 deg C shall be provided with an air defrost system.

d. Defrost system: Units designed for operation below 1 deg C shall have an electric defrost system and include a 24 hour timer, fan delay and be time initiated and temperature terminated with a built-in timer fail safe control.

e. Ventilation System & Dehumidification System: Provide supply and return S/S grilles with filtered blast gate dampers and ducted extensions out of

cold room. Ventilation System shall have the cold room return air exiting the room to the process inlet of the dehumidifier system, with the cooler supply air entering, the cold room from the process outlet side of the dehumidifier system, filtered by a desiccant dryer to remove humidity. A desiccant dryer system shall be provided for each refrigerated room by the refrigerated room manufacturer. Desiccant dryer systems shall be manufactured and design by Munters, and sized to perform the required dehumidification function to achieve a constant relative humidity of 45% RH in each cooler. HVAC contractor to provide carbon filter, ducting to and from dehumidifier, ducting from reactivation exhaust side of dehumidifier system out building. Installation shall be coordinated with the HVAC contractor.

f. Ambient interior building temperature (outside cooler): 85 degrees.

2. Condensing Unit: Condensing units shall be hermetic or scroll type, air-cooled, factory assembled and UL listed. Provide all components necessary to accomplish effective, efficient, serviceable installation. Components shall be remote rooftop mounted on a heavy gauge steel base. Condensing unit rack shall be constructed of heavy gauge weather resistant metal angle, welded together, sized for the unit accommodated. Compressor mountings shall be pre-assembled, sized where shown on the drawings. On the low temperature systems the time clock shall be included on the switch over system as described. Refrigerant lines shall be field supplied and installed. Design of the refrigerant system shall be based on the maximum run of 50 feet for the refrigerant lines (horizontally and vertically) to meet the requirements of the location where the equipment is installed on the building.

System shall consist of, but not be limited to hermetic or scroll compressor, receiver, air cooled condenser, evaporator, moisture indicating sight glass, liquid filter-drier, dual pressure controls, crankcase pressure regulator, suction accumulator, suction line filter, liquid line solenoid valves, expansion valve, oil level sight glass, manual shut-off valves, condenser head pressure control valve (flooded condenser type), and all integral piping and wiring system shall be capable of operating at low ambient temperature.

Separate and independent air-cooled refrigeration systems shall be provided for each walk-in unit. The manufacturer/supplier shall calculate and provide the proper size of compressors and blower coils based on loads determined from the drawings in terms of number of items stored, performance requirements of this specification and normally expected usage of walk-in units in a lab facility.

Additional requirements:

a. Condensing unit assembly to have waterproof housing with standard finish.
b. Provide all necessary controls.
c. Refrigerant, R404A, or as required by local codes.
d. Size and type of circuit breakers are as shown on the electrical drawings.
e. Make all necessary attachments to the building structure for installation of equipment and provide all required interfacing steel. Submit details in submittal package.
f. Provide all piping from condensers to all related components.
g. Condensing units shall be designed by Keeprite or approved equal.

3. Evaporator:

a. Coils shall be sized to balance with the condensing unit.
b. Shall be made of plate type aluminum fins with copper tubes.
c. Shall have a drain pan with suitable drainpipe fitting.
d. Fan motors and coil shall be housed in a heavy gauge aluminum enclosure.
e. Defrost shall be time initiated and temperature terminated with built-in fail safe control on 1 deg C or lower.
f. Evaporator shall have a drain pan with suitable drainpipe fitting.
g. Freezer evaporators to have an automatic electric timed defrost system including heaters, time clock, fan delay control and heated drain pan, all designed to avoid condensation build-up. Defrost shall be time initiated and temperature terminated with built-in fail safe controls.
h. Evaporators shall be design to a Keeprite low/medium profile unit or equivalent.
i. Fan motor shall be ECM (Electronically Commutated Motor) type, in lieu of other types.)

4. Compressors:

   a. Compressors shall be installed on a roof curb or housekeeping pad supplied by others. Refer to drawings for exact location.

   b. Compressor/Condenser system shall be high-efficiency design with extended condenser surface, and floating head pressure. Acceptable systems include Keeprite, Heatcraft or Russell.

   c. Coordinate size and type of circuit breakers for refrigerated rooms. Make all necessary attachments to building structure and provide all interfacing steel for installation of equipment.

5. Refrigeration Electrical Requirements: To be confirmed by refrigerated room manufacturer and as indicated in the electrical drawings.

   a. Special Procedure Cooler **ME8**:
      1. Condenser: 208-230V, 60 Hz, three-phase, 15 amp circuit for each (separate redundant circuits for each of the redundant systems).
      2. Evaporator Coils: 115V, 60 Hz, single phase, 15 amp circuit for each (separate redundant circuits for each of the redundant systems). Power supplied by control panel
      3. *Electrical contractor is responsible for providing power per the requirements of the refrigeration equipment to a termination* point at the Refrigeration Equipment Suppliers control panel and condensing units only. Refer *to lab plans for location. The Refrigeration Equipment Supplier is responsible for providing all conduit, switches, lighting, wiring, disconnects and final electrical connections to all refrigeration equipment controlled by the Refrigeration Equipment Suppliers control panel.*

   b. Freezer **ME9**:
      1. Condenser: 208-230V, 60 Hz, three-phase, 50 amp circuit for each (separate redundant circuits for each of the redundant systems).
      2. Evaporator Coils: 208-230V, 60 Hz, single-phase, for each coil and electrical power to feed coils from

time clock. The time clock shall be incorporated and installed in the control panel to electrically power the coils.

3. Electrical contractor is responsible for providing power per the requirements of the refrigeration equipment to a termination point at the Refrigeration Equipment Suppliers control panel and condensing units only. Refer to lab plans for location. The Refrigeration Equipment Supplier is responsible for providing all conduit, switches, lighting, wiring, disconnects, and final electrical connections to all refrigeration equipment controlled by the Refrigeration Equipment Suppliers control panel.

c. Body Cooler **ME7**:

1. Condenser: 208-230V, 60 Hz, three-phase, 60 amp circuit for each (separate redundant circuits for each of the redundant systems).
2. Evaporator Coils: 115V, 60 Hz, single phase, 15 amp circuit for each (separate redundant circuits for each of the redundant systems). Power supplied by control panel
3. Electrical contractor is responsible for providing power per the requirements of the refrigeration equipment to a termination point at the Refrigeration Equipment Suppliers control panel and condensing units only. Refer to lab plans for location. The Refrigeration Equipment Supplier is responsible for providing all conduit, switches, lighting, wiring, disconnects and final electrical connections to all refrigeration equipment controlled by the Refrigeration Equipment Suppliers control panel.

O. Automatic Switch-Over Device:

1. Shall consist of an electronic panel, which controls a dual mechanical system designed to provide temperature security in walk-in units. System shall incorporate the following features:

a. System back up based on heat load demand.
b. Equal wear time on condensing units and blower coils.
c. Protection from single condensing unit failure.
d. Situational warning lights for malfunction.
e. Replaceable component design.

2. Controls: Each system shall be mounted on the outside wall of the walk-in unit and shall be contained in a UL listed NEMA, Type 4 enclosure. Control box shall have an overlay of operating instruction on the front panel. Conduit chase cover required from control panel to finish ceiling structure (See section “Other Special Refrigeration Room Design Requirements” may apply). Each system shall contain:

   a. Temperature control sensor for thermostat control.
   b. Humidistat for humidity control.
   c. Cycle timer.
   d. Alternating switching relay.
   e. Blower coil pull-in relay. Relay (only supplied if programmed and controlled by control system and not by Time Clock)
   f. Defrost system to be monitored on freezer applications
   g. Defrost time clock incorporated and installed in control box.
   h. Liquid Line Solenoid valve pull-in relay.
   i. Pilot lights.
   j. Digital temperature display
   k. Emergency shut down switch, which shall be labeled and readily available on the panel.
   l. Door ajar feature to alarm by audio and visual feature.
   m. Provide monitoring signals as follows for connection by the temperature control contractor:

      1. Normally open high temperature dry alarm contacts.
      2. Normally open low temperature dry alarm contacts.
      3. 4-20 milliamp retransmit signal for temperature.
      4. 4-20 milliamp retransmit signal for RH
      5. Normally closed emergency dry alarm contact.

3. Operation:

   a. During the initial pull down the refrigeration system shall be in operation and the lead or lag system and System warning lights shall be on. After the recover time has elapsed the system may go into alarm.

Continue to mute system till set point is reached. Once set point is reached reset all alarm indicators.

b. Once the desired temperature is achieved, the lead or lag system light shall be on, and the other systems shall be in stand-by status.

c. Every 3 1/2 days, the control panel automatically switches the primary system with the backup system to allow for wear on both systems.

d. If the primary system fails to maintain proper temperature the backup system shall be automatically set into operation, and the system warning light shall be lit. Only when the temperature is satisfied will the situation lights go back into normal operation.

e. When the defrost indicator light is lit, this indicates the system is in defrost operation for freezer application.

P. Temperature Alarm Systems.

1. Primary surveillance center: Shall be incorporated in same panel, as switchover panel the center is to include the following:

a. Digital read out of room temperature.
b. Digital read out of RH.
c. Door ajar indicators.
d. Audible and visual alarms.
e. Audible defeat timers.
f. Temperature monitoring by 4-20 mA retransmit.
g. Humidity monitoring by 4-20 mA retransmit.

2. Alarm features: The alarm features are to include a digital read out for the room temperature at 6-feet above inside floor. An audiovisual signal shall indicate a temperature above or below the specified ratings for each room. Control panel must provide a silence feature for audio portion of alarm. High, low and emergency dry contacts for notification to BMS. The alarm shall have a door ajar signal from each door.

3. Temperature and Humidity Monitoring-Recording Device:

Control Panel must provide a 4-20 mA signal output for owners monitoring system (BMS). Connection to output signal on control panel by others. Owners monitoring system is responsible for trending and recording of signal.

4. High/low temperature and emergency notification: Control Panel to provide dry contacts for owner BMS. Connection to dry contacts by others.

Q. Pressure Relief Vent (**Freezer units**): Shall be provided to equalize the exterior and interior pressure differences caused by sudden temperature changes.

R. Air Registers (HVAC grilles): Provide and install stainless steel air registers in locations within the refrigerated room units as shown on the mechanical drawings. Register openings in cooler panels shall be located and cut in the field and properly reinforced by the cooler manufacturer. Registers shall be of the size and design shown in the mechanical drawings. HVAC contractor to supply ducted connections from the air registers to the Desiccant dryer system, supply and/or return duct system. The exhaust airflow from the dehumidifier system out of building as required. Refer to drawings for more details.

S. Other Special Refrigerated Room Design Requirements:

1. Refer to drawings for locations of refrigerated room control panels.

2. Control Panel requires multiple circuits. Electrical contractor to coordinate with Walk-in manufacture for rough-in locations at control panels.

3. All conduit and wiring to cooler and freezer components shall be prewired by the walk-in refrigerated room manufacturer, run concealed within cooler/freezer panels or run above panels in ceiling or wall cavities. No exposed conduit is permitted to electrical fixtures. All concealed conduit inside of cooler or freezer panels shall be installed by the manufacturer.

4. Design all cooler and freezer ceilings to support a live load of 30 PSF.

5. Coordinate location of condensate plumbing with

plumbing contractor.

6. Seismic Restraints: The manufacturer/installer shall design and install walk-in units to resist seismic loading as required by the local governing codes. Provide all seismic details with submittal package indicating required any special wall construction, point loads, etc. Install all anchorage devices, including special legs and or braces, required for seismic restraint of walk-in units to satisfy all governing code requirements for seismic anchorage of equipment.

7. 5-Tier Cantilever Storage System: **Equipment Number ME4**

Model 7002-5SS-MOD 5 Tier by Mortech Manufacturing; 411 North Aerojet Avenue, Azusa, Ca. 91702 www.mortechmfg.com (Phone: 800-410-0100), or equal products from other manufacturers pre-approved in writing 10 days prior to bid date.

a. Removable support arms.
b. Adjustable support arms in 2” increments vertically.
c. 300 lb capacity per tier.
d. Equip with leveling plates to adjust for varied floor conditions.
e. Installed to coordinate with owner gurney layout.

T. Piping:

1. Tubing: ACR type. Hard drawn, cleaned and capped type L copper tubing soldered with silver solder, except for hot gas lines which shall be silver brazed. All lines shall be installed to allow for linear expansion of copper after startup.
2. Suction and Liquid Gas Pipes: Size for velocity of 500-700 FPM on horizontal runs and show a slight pitch toward condensing unit. When condensing unit is located below evaporator and there is not possibility of trapping oil, size vertical runs. When condensing unit is located above evaporator, size vertical runs for velocity of 1000-1500 FPM.
3. Liquid Pipes: Size all liquid pipes for maximum 2 psig pressure drop.
4. Hangers: F & M ring type or Unistrut assemblies with appropriate tubing clamps to support liquid, suction, and discharge pipes individually. Space supports according to local codes.
5. Condensate Drain Piping: 7/8-inch outside diameter or

greater Type L copper tubing piped from evaporators to open floor drain, space support according to local codes, installed in such a manner that it leaves a 1-inch clearance space between wall and drain. Floor drain to be located outside of cooler or freezer units. Adequately slope towards floor drain and carry through wall of refrigerated areas properly sealing, trapping and discharging to the floor drain.

6. Refrigerant Testing: Pressurize and leak test entire system at not less than 200 psig. Clean and dehydrate by maintaining a vacuum of 500 microns, or lower, for a 5 hour period.

U. Insulation: Fire retardant “Armstrong” insulation, or approved equal, for insulating refrigeration suction lines and hot gas lines. Use minimum 3/4” -inch thick wall for coolers and a 1-inch thick wall for freezers or what local codes enforce. Apply during tubing assembly where possible.

V. Drain Lines (**Freezer units**): Condensate drain lines must exit freezer unit immediately and requires heat trace. Proper insulation must be installed to keep water condensation from icing.

W. Redundancy: All cooler and freezer units shall be provided with totally complete redundant mechanical systems with lead / lag timer. Refer to additional requirements for redundancy elsewhere in this specification.

PART 3-EXECUTION

3.1 EXAMINATION

A. Verify equipment rough in before proceeding with the work in this section.

B. Coordinate with other trades for the proper and correct installation of plumbing and electrical rough-in, structural backing for items attached to walls, and for rough opening dimensions required for the installation of products in this section.

C. Examine substrate surfaces and associated work and conditions under which work will be installed. Do not proceed until unsatisfactory conditions have been corrected in a manner complying with the Contract Documents and acceptable to the Installer. Starting of work within a particular area will be construed as installer’s acceptance of surface conditions.

3.2 INSTALLATION

A. Install in accordance with manufacturer's instructions.

B. Install in accordance with codes and standards required by authority having jurisdiction.

C. Anchor equipment securely in place. Comply with all seismic restraint code requirements for installation of walk-in units and associated equipment.

1. Sequence installation to ensure utility connections are achieved in an orderly and expeditious manner.

2. Inspect all floor, wall and ceiling conditions for trueness, to be level and plumb. Notify architect of any unacceptable conditions. Do not proceed with installation until unacceptable conditions have been corrected. Proceeding with installation will be taken as acceptance of all conditions.

3. Install all walk-in units plumb, true, neatly and securely. Install all doors to operate freely, without binding and to seal openings completely. Install all mechanical and electrical equipment to operate quietly, efficiently and without vibration to perform the intended function. Provide proper ventilation for all equipment. Install equipment for ease of inspection, service and maintenance.

D. Touch-up minor damage surfaces caused during installation. Replace damaged components as directed by Architect.

1. Seal all cooler panel joints with a sealant approved by the cooler manufacturer.

3.3 CLEANUP, MAINTENANCE, ADJUSTING & DEMONSTRATION

A. At completion, clean all surfaces thoroughly using no cleaners, which will harm adjacent surfaces.

B. Protect all equipment and surfaces from damage and replace all damaged items.

C. Adjust operating equipment to efficient operation for its intended use and as required by the manufacturer.

D. Provide systems training and demonstration of all equipment operations

and functions to the owner.

E. Refer to Commissioning Specification Section for training requirements for specific systems and equipment. Training of the Owner's operation and maintenance personnel is required in cooperation with the Commissioning Consultant. A training agenda shall be prepared by the Contractor and approved by the Owner prior to training performance.

END OF SECTION 13 08 00

FOOTING AND FOUNDATION PLAN NOTES:

1. COORDINATE LOCATION OF DEPRESSED SLABS, SLOPED SLABS, AND FLOOR DRAINS WITH ARCHITECTURAL AND MECHANICAL DRAWINGS.
2. SEE ARCHITECTURAL DRAWINGS AND CIVIL DRAWINGS FOR EXTERIOR CONCRETE WORK AT DOORS, SIDEWALKS, ETC.
3. CENTER ALL SPOT FOOTINGS UNDER COLUMNS AS SHOWN ON PLAN. TYPICAL UNO.
4. SEE ARCHITECTURAL DRAWINGS FOR DIMENSIONS TO ALL STEEL COLUMNS.
5. SEE FOOTING AND FOUNDATION DETAILS ON SHEET (S501) FOR BURIED PIPES RUNNING PARALLEL AND PERPENDICULAR TO FOOTINGS.
6. SEE FOOTING AND FOUNDATION DETAILS ON SHEET (S501) FOR TYPICAL CONSTRUCTION AND CONTROL JOINTS IN FLOOR SLABS.
7. SEE FOOTING AND FOUNDATION DETAILS ON SHEET (S501) FOR LOCATIONS WHERE CONTROL JOINTS ARE DISCONTINUOUS.
8. SEE FOOTING AND FOUNDATION DETAILS ON SHEET (S501) FOR REINFORCING AROUND MISCELLANEOUS OPENINGS IN CONCRETE WALLS.
9. SEE FOOTING AND FOUNDATION DETAILS ON SHEET (S501) FOR FILL BENEATH FOOTINGS.
10. SEE SHEETS (S401) AND (S402) FOR FRAME ELEVATIONS AND DETAILS.

MARKS AND SYMBOL LEGEND

SECTION MARK / SHEET NUMBER	CONC WALL, SEE SCHED ON (S301)	FD	FLR DRAIN, SEE ARCH FOR EXACT LOCATION
FRAME EL MARK FRAME / EL ON (S400's)	STL COL, SEE SCHED ON (S304)	BFC	BRACED FRAME COLUMN, SEE ELEVATIONS
FTG / EL — FTG DESIGNATION / TOF EL, SEE DET ON (S501) FOR REQD FROST DEPTH	CW-X — CONC WALL, SEE SCHED ON (S301)	MFC	MOMENT FRAME COLUMN, SEE ELEVATIONS
DEPRESSED FND WALL, POUR SLAB OVER, SEE FTG AND FND DETS ON (S502)	SC-x — STL COL, SEE SCHED ON (S304)		
S — S — FTG STEP, SEE FTG AND FND DETS ON (S501)	CP-x — CONC PIER, SEE SCHED ON (S301)		
FLR OFFSET, SEE FTG AND FND DETS ON (S501)	FC-x — CONT FTG, SEE SCHED ON (S301)		
DEPRESSED SLAB, SEE ARCH PLANS FOR EXACT LOCATION AND EL	FS-x — SPOT FTG, SEE SCHED ON (S301)		
	FR-x — RECTANGULAR FTG, SEE SCHED ON (S301)		
	FTS-x — THICKENED SLAB FTG, SEE SCHED ON (S301)		
	CJ — CONTROL JOINT, SEE FTG AND FND DETS ON (S501)		

KEY PLAN

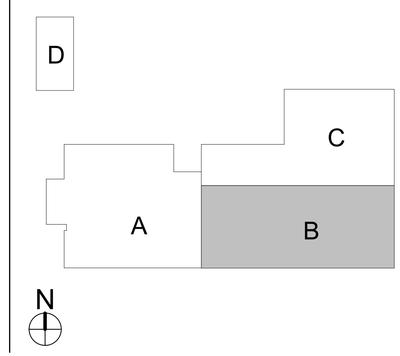

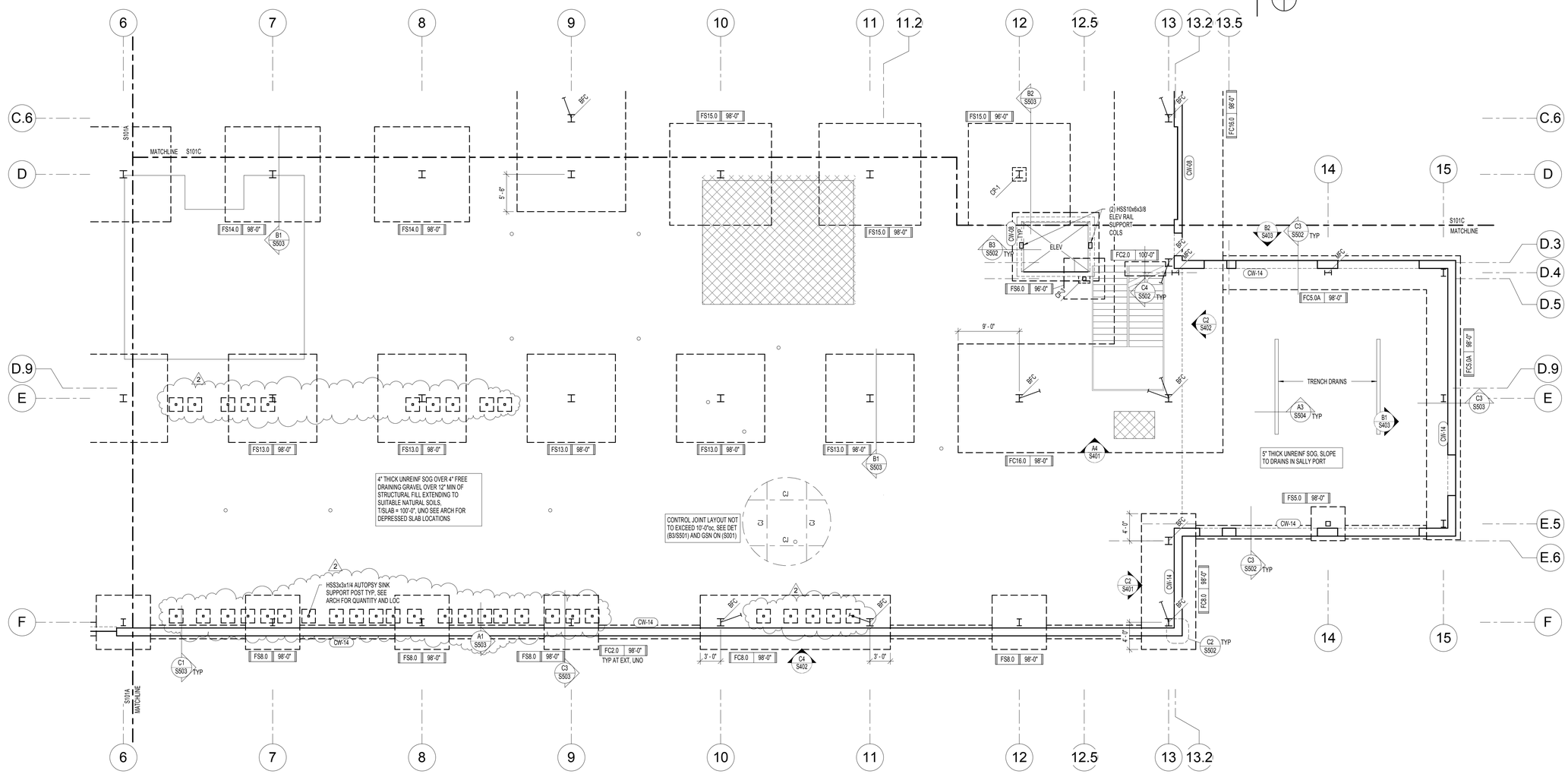

A1 S101B FOOTING AND FOUNDATION PLAN - AREA B
SCALE: 1/8" = 1'-0"

APRIL 21, 2014
BID SET

NOTE:
THESE STRUCTURAL DRAWINGS ARE BASED ON ARCHITECTURAL DRAWINGS DATED APRIL 10, 2014

DIMENSIONS AND ELEVATIONS, AS THEY RELATE TO THE BUILDING IN GENERAL, i.e. GRID TO GRID DIMENSIONS OR DECK BEARING ELEVATIONS, ARE SUPPLIED BY THE ARCHITECT. THEY ARE PROVIDED ON THE STRUCTURAL PLANS AND DETAILS FOR THE CONVENIENCE OF THE CONTRACTOR. VERIFY DIMENSIONS AND ELEVATIONS WITH ARCHITECTURAL DRAWINGS.

DUNN ASSOCIATES, INC
Consulting Structural Engineers
WWW.DUNN-SE.COM
PH: 801-575-8877 FAX: 801-575-8875

CRSA
649 E. South Temple
Salt Lake City, UT 84102
801.355.5915

MWL
11798 N. Lakeridge Pkwy.
Ashland, VA 23005
804-228-7473

State of Utah
Department of Administrative Services
Division of Facilities Construction & Management
4110 State Office Building
Salt Lake City, Utah 84114
Phone: (801) 538 - 3018
Fax: (801) 538 - 3267

DFCM APPROVAL STAMP

ARCHITECT-ENGINEER STAMP

Unified State Laboratory Module 2

4451 South 2700 West, Taylorsville, UT 84118

DFCM #:	13020300
Project #:	13062

DATE:	ISSUE TYPE:
APRIL 21, 2014	BID SET
MAY 08, 2014	ADD # 1

CHECKED BY	TAK
DRAWN BY	SJS

FOOTING AND FOUNDATION PLAN - AREA B

S101B

VOLUME 1

ROOF FRAMING PLAN NOTES:

1. VERIFY ROOF SLOPES, DRAINS, AND DECK BEARING ELEVATIONS WITH ARCHITECTURAL DRAWINGS. SEE ROOF FRAMING DETAILS ON SHEET (S701).
2. ALL JOISTS SHALL HAVE 5" DEEP BEARING ENDS. UNO.
3. ALL GIRDERS SHALL HAVE 7 1/2" DEEP BEARING ENDS. UNO.
4. ALL ROOF OPENINGS SHALL BE FRAMED AS INDICATED IRROOF FRAMING DETAILS ON SHEET (S701).
5. SEE ROOF FRAMING DETAILS ON SHEET (S701) FOR CONCENTRATED LOADS LOCATED FURTHER THAN 6" FROM JOIST/GIRDER PANEL JOINT.
6. SEE ROOF FRAMING DETAILS ON SHEET (S701) FOR MECHANICAL UNITS HUNG BELOW JOISTS.
7. VERIFY SIZE, WEIGHT, AND LOCATION OF ALL ROOF TOP MECHANICAL UNITS WITH ARCHITECTURAL AND MECHANICAL DRAWINGS. SEE ROOF FRAMING DETAILS ON SHEET (S701) FOR STEEL FRAMES AT ALL ROOF TOP EQUIPMENT. COORDINATE OPENINGS WITH MECHANICAL, ELECTRICAL, AND GENERAL CONTRACTORS.
8. OPEN WEB STEEL JOISTS AND JOIST GIRDERS SHALL BE DESIGNATED BY THE MANUFACTURER TO SUPPORT THE MECHANICAL AND LATERAL LOADS SHOWN ON THE ROOF FRAMING PLANS IN ADDITION TO THE UNIFORM AND POINLOADS SHOWN.
9. WHERE SKYLIGHTS OR MECHANICAL UNITS INTERRUPT HORIZONTAL BRIDGING, PROVIDE CROSS BRIDGING AT JOIST SPACES ON EA SIDE. TYPICAL
10. WHERE DIAGONAL BRIDGING CONFLICTS WITH MECHANICAL DUCTS, REMOVE DIAGONAL BRIDGING AND REPLACE WITH HORIZONTAL BRIDGING (AFTER ROOF DECK IS IN PLACE).
11. * - INDICATES THAT THESE JOISTS SHALL BE DESIGNED FOR AN ADLOAD OF 1000# AT ANY TOP CHORD PANEL POINT. THIS LOAD IS TO BE ADDED TO THE GIRDER TOP CHORD LOAD. MULTIPLE *** ARE ADDITIVE.
12. JOIST DESIGNER SHALL DESIGN JOISTS AND SUPPLY ADDITIONAL BRIDGING AS REQUIRED FOR ___ PSF NET UPLIFT DUE TO WIND. THERE IS NO UPLIFT ON GIRDERS.
13. SEE SHEETS (S401) AND (S402) FOR MOMENT FRAME ELEVATIONS AND DETAILS ON SHEET (S701).
14. SEE ARCHITECTURAL PLANS FOR ALL STEEL COLUMN LOCATIONS (DIMENSIONS).
15. SPRINKLER DESIGNER SHALL COORDINATE THE SPRINKLER DESIGN WITH THE JOIST/GIRDER SHOP DRAWINGS.

FLOOR FRAMING PLAN NOTES:

1. VERIFY WALL FLOOR OPENINGS FOR MECHANICAL SHAFTS, STAIRS, ETC. WITH ARCHITECTURAL DRAWINGS.
2. SEE FLOOR FRAMING DETAILS ON SHEET (S601) FOR FRAMING AROUND MISCELLANEOUS OPENINGS.
3. SEE SHEETS (S401) AND (S402) FOR FRAME ELEVATIONS AND DETAILS.
4. SEE ARCHITECTURAL DRAWINGS FOR ALL DIMENSIONS TO STEEL COLUMNS AND SLAB EDGES.
5. SEE FOOTING AND FOUNDATION DETAILS ON SHEET (S501) FOR REINFORCING AROUND MISCELLANEOUS OPENINGS IN CONCRETE WALLS.
6. ALL FLOOR GIRDERS SHALL HAVE 7 1/2" ENDS. UNO.

SNOW DRIFT LOADING DIAGRAM

MARKS & SYMBOLS LEGEND

SECTION MARK SHEET NUMBER	CONC COL, SEE SCHED ON (S301)	CC-x	CONC COL, SEE SCHED ON (S301)	MAS WALL, SEE SCHED ON (S302)	
FRAME EL MARK FRAME EL ON (S400's)	LATERAL FRAME MOMENT CONNECTIONS	CL-x	CONC LINTEL, SEE SCHED ON (S301)	MW-X	MAS WALL, SEE SCHED ON (S302)
	GRAVITY MOMENT CONNECTIONS	W_x_	COMPOSITE STL BMS, SEE GSN ON (S002)	CW-X	CONC WALL, SEE SCHED ON (S301)
CONC OVER MTL DECK, SEE GSN ON (S002)	DBL SHEAR CONNECTION, SEE SCHED ON (S303)	(x)	NUMBER OF HSA FOR SECTION OF COMPOSITE STL BM, SEE GSN ON (S002)		CONC WALL, SEE SCHED ON (S301)
ADDITIONAL CONC REINF OF (2) #6 BARS x 6'-0", CTR ON CORNERS, NO SPLICES	'h' x 'w' INDICATES A HEIGHT (IN) x WIDTH (IN) BM PENETRATION CTR IN THE BM DEPTH, SEE DET (A2/S602), PROVIDE A MAT REINF IN THE SLAB OF #4 AT 12"oc EW, SEE DET (A2/S602) FOR EXTENT OF REINF OVER PENETRATION. PROVIDE ADDITIONAL HSA's BTWN PENETRATION EDGE AND MID-SPAN BM TO ATTAIN HSA's 6"oc MAX	(c=_")	REQD PRE-CAMBER AT MID-SPAN OF BMS, CAMBER TOLERANCE SHALL BE +1/4", -0"		CONCRETE SUSPENDED SLAB, SEE SCHED ON (S301)
DEPRESSED SLAB, SEE ARCH PLANS FOR EXACT LOCATION AND EL		T=C=xK	ROOF JST TOP CHORD SHALL BE DESIGNED FOR AN ADDITIONAL LOAD OF __KIPS IN TENSION AND COMPRESSION. LOADS ARE PROVIDED AT ULTIMATE STRENGTH LEVEL	[X"]	INDICATES THE DISTANCE THAT THE BEAM IS OFFSET FROM THE STANDARD T/STL
CONC WALL, SEE SCHED ON (S301)		(SFRSC)	SEISMIC FORCE RESISTING SYSTEM COLLECTOR. SEE DETS ON SHEET (S405) FOR CONNECTIONS	L3	L3x3 1/4 BRACE, SEE (S400) SHEETS FOR ADDITIONAL INFORMATION
STL COL, SEE SCHED ON (S304)	SC-x STL COL, SEE SCHED ON (S304)	CSS-X	CONCRETE SUSPENDED SLAB, SEE (A1/S301)	L4	L4x4x3/8 FRAME BRACING, SEE DETAILS ON (S404) AND (S406)
SFRSC CONNECTION, SEE (S400) SHEETS FOR DETAILS	CB-x CONC BM, SEE SCHED ON (S301)			L5	L5x5x3/8 FRAME BRACING, SEE DETAILS ON SHEETS (S404) AND (S406)
	RD ROOF DRAIN, SEE ARCH AND MECH FOR EXACT LOCATION. SEE DET (B3/S701) FOR FRAMING	OWSJ (XXX/XXX)	OPEN WEB STEEL JOIST (TOTAL LOAD/ LIVE LOAD) IN plf	C10	C10x20 HORIZONTAL. SEE DETAILS ON SHEET (S406)

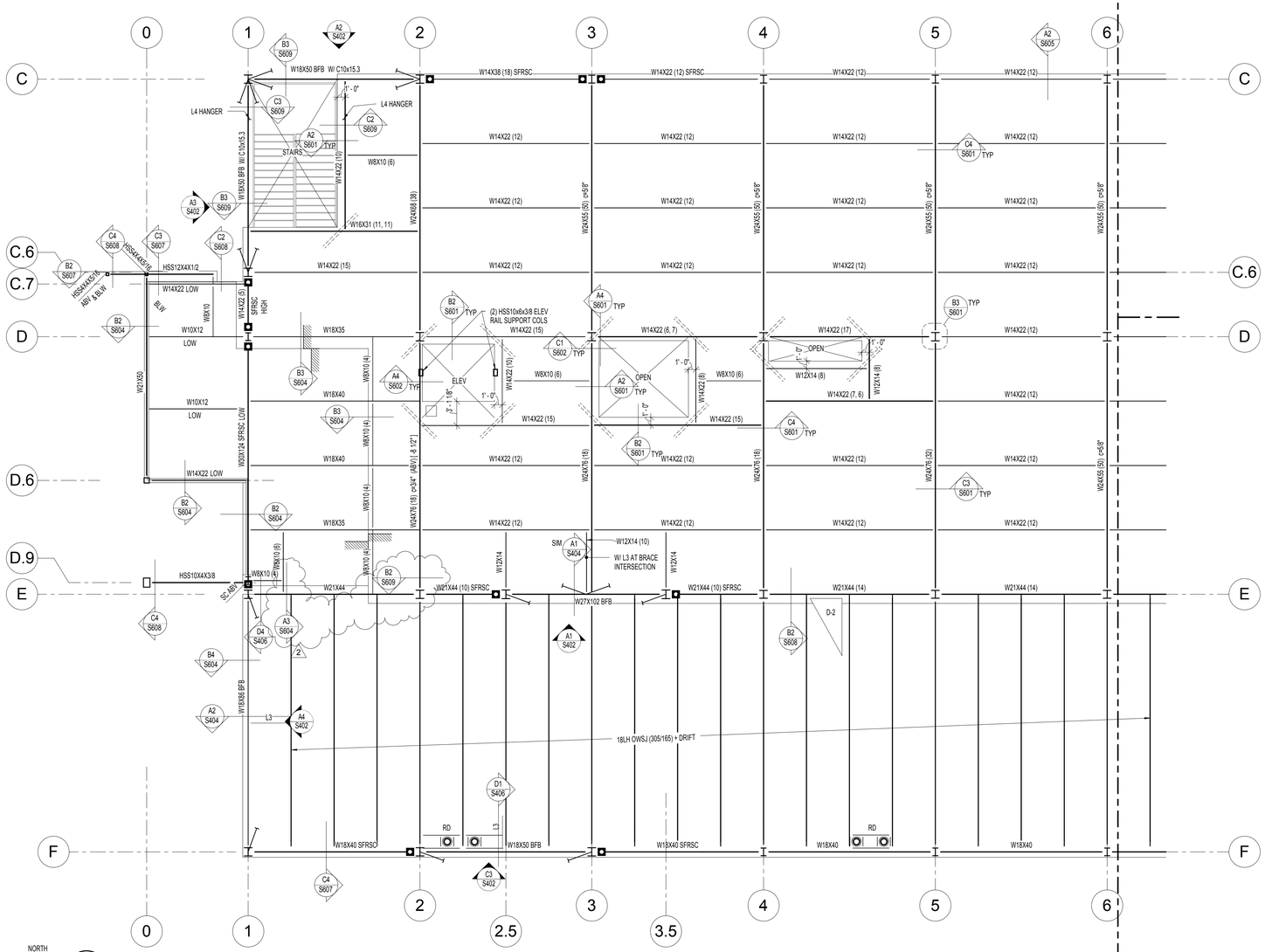

NORTH

A1 / S103A LEVEL 3 FLOOR FRAMING PLAN - AREA A
SCALE: 1/8" = 1'-0"

KEY PLAN

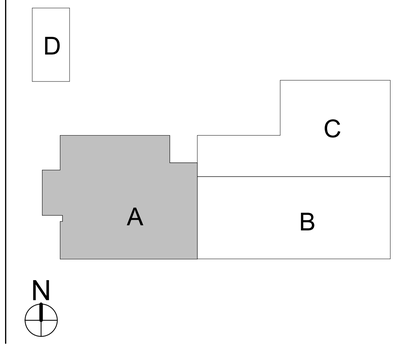

APRIL 21, 2014
BID SET

NOTE:
THESE STRUCTURAL DRAWINGS ARE BASED ON ARCHITECTURAL DRAWINGS DATED APRIL 10, 2014

DIMENSIONS AND ELEVATIONS, AS THEY RELATE TO THE BUILDING IN GENERAL, i.e. GRID TO GRID DIMENSIONS OR DECK BEARING ELEVATIONS, ARE SUPPLIED BY THE ARCHITECT. THEY ARE PROVIDED ON THE STRUCTURAL PLANS AND DETAILS FOR THE CONVENIENCE OF THE CONTRACTOR. VERIFY DIMENSIONS AND ELEVATIONS WITH ARCHITECTURAL DRAWINGS.

DUNN ASSOCIATES, INC
Consulting Structural Engineers
WWW.DUNN-SE.COM
PH: 801-575-8877 FAX: 801-575-8875

CRSA
649 E. South Temple
Salt Lake City, UT 84102
801.355.5915

MWL
11798 N. Lakeridge Pkwy.
Ashland, VA 23005
804-228-7473

State of Utah
Department of Administrative Services
Division of Facilities Construction & Management
4110 State Office Building
Salt Lake City, Utah 84114
Phone: (801) 538 - 3018
Fax: (801) 538 - 3267

DFCM APPROVAL STAMP

ARCHITECT-ENGINEER STAMP

Unified State Laboratory Module 2

4451 South 2700 West, Taylorsville, UT 84118

DFCM #:	13020300
Project #:	13062

DATE:	ISSUE TYPE:
APRIL 21, 2014	BID SET
MAY 08, 2014	ADD # 1

CHECKED BY	TAK
DRAWN BY	SJS

LEVEL 3 FLOOR FRAMING PLAN - AREA A

S103A

VOLUME 1

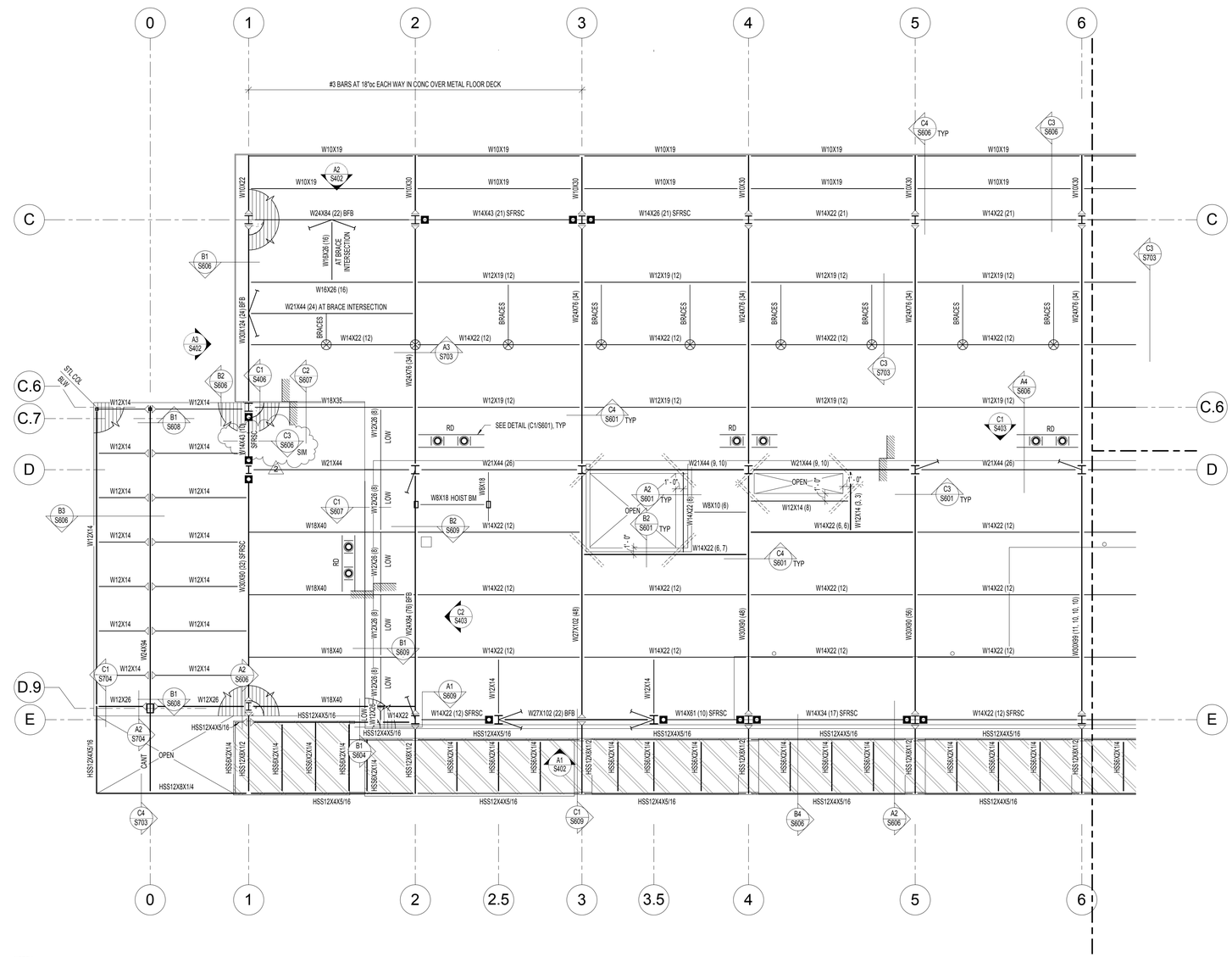

B1 PENTHOUSE FLOOR/ ROOF FRAMING PLAN - AREA A
S104A SCALE: 1/8" = 1'-0"

ROOF FRAMING PLAN NOTES:

1. VERIFY ROOF SLOPES, DRAINS, AND DECK BEARING ELEVATIONS WITH ARCHITECTURAL DRAWINGS. SEE ROOF FRAMING DETAILS ON SHEET (S701).
2. ALL JOISTS SHALL HAVE 5" DEEP BEARING ENDS. UNO.
3. ALL GIRDERS SHALL HAVE 7 1/2" DEEP BEARING ENDS. UNO.
4. ALL ROOF OPENINGS SHALL BE FRAMED AS INDICATED IN ROOF FRAMING DETAILS ON SHEET (S701).
5. SEE ROOF FRAMING DETAILS ON SHEET (S701) FOR CONCENTRATED LOADS LOCATED FURTHER THAN 6" FROM JOIST/GIRDER PANEL JOINT.
6. SEE ROOF FRAMING DETAILS ON SHEET (S701) FOR MECHANICAL UNITS HUNG BELOW JOISTS.
7. VERIFY SIZE, WEIGHT, AND LOCATION OF ALL ROOF TOP MECHANICAL UNITS WITH ARCHITECTURAL AND MECHANICAL DRAWINGS. SEE ROOF FRAMING DETAILS ON SHEET (S701) FOR STEEL FRAMES AT ALL ROOF TOP EQUIPMENT. COORDINATE OPENINGS WITH MECHANICAL, ELECTRICAL, AND GENERAL CONTRACTORS.
8. OPEN WEB STEEL JOISTS AND JOIST GIRDERS SHALL BE DESIGNATED BY THE MANUFACTURER TO SUPPORT THE MECHANICAL AND LATERAL LOADS SHOWN ON THE ROOF FRAMING PLANS IN ADDITION TO THE UNIFORM AND POINT LOADS SHOWN.
9. WHERE SKYLIGHTS OR MECHANICAL UNITS INTERRUPT HORIZONTAL BRIDGING, PROVIDE CROSS BRIDGING AT JOIST SPACES ON EA SIDE. TYPICAL.
10. WHERE DIAGONAL BRIDGING CONFLICTS WITH MECHANICAL DUCTS, REMOVE DIAGONAL BRIDGING AND REPLACE WITH HORIZONTAL BRIDGING (AFTER ROOF DECK IS IN PLACE).
11. * - INDICATES THAT THESE JOISTS SHALL BE DESIGNED FOR AN ADLOAD OF 1000# AT ANY TOP CHORD PANEL POINT. THIS LOAD IS TO BE ADDED TO THE GIRDER TOP CHORD LOAD. MULTIPLE ** ARE ADDITIVE.
12. JOIST DESIGNER SHALL DESIGN JOISTS AND SUPPLY ADDITIONAL BRIDGING AS REQUIRED FOR ___ PSF NET UPLIFT DUE TO WIND. THERE IS NO UPLIFT ON GIRDERS.
13. SEE SHEETS (S401) AND (S402) FOR MOMENT FRAME ELEVATIONS AND DETAILS ON SHEET (S701).
14. SEE ARCHITECTURAL PLANS FOR ALL STEEL COLUMN LOCATIONS (DIMENSIONS).
15. SPRINKLER DESIGNER SHALL COORDINATE THE SPRINKLER DESIGN WITH THE JOIST/GIRDER SHOP DRAWINGS.

MARKS AND SYMBOLS LEGEND

- SECTION MARK / SHEET NUMBER
- FRAME EL MARK FRAME / EL ON (S400's)
- MTL ROOF DECK, SEE GSN ON (S101)
- BRG WALL BLW
- STL COL, SEE SCHED ON (S304)
- LATERAL FRAME MOMENT CONNECTIONS
- GRAVITY MOMENT CONNECTIONS
- DOUBLE SHEAR CONNECTION, SEE SCHED ON (S303)
- JST TOP CHORD TIE, SEE ROOF FRAMING DETS ON (S701)
- HORIZ BRIDG
- X-BRIDG
- HORIZ BRDG REQD FOR UPLIFT, SEE STL JST SUPPLIER FOR REQUIREMENTS
- ML-x — MAS LINTEL, SEE SCHED ON (S301)
- T=CnxK — ROOF JST TOP CHORD SHALL BE DESIGNED FOR AN ADDITIONAL LOAD OF __KIPS IN TENSION AND COMPRESSION. LOADS ARE PROVIDED AT ULTIMATE STRENGTH LEVEL
- RD — ROOF DRAIN. SEE ARCH AND MECH FOR EXACT LOCATION. SEE DET (B3/S701) FOR FRAMING
- (SFRSC) — SEISMIC FORCE RESISTING SYSTEM COLLECTOR. SEE DETS ON SHEET (S405) FOR CONNECTIONS
- L3 — L3x3 1/4 BRACE. SEE (S400) SHEETS FOR ADDITIONAL INFORMATION
- L4 — L4x4x3/8 FRAME BRACING, SEE DETAILS ON (S404) AND (S406)
- L5 — L5x5x3/8 FRAME BRACING, SEE DETAILS ON SHEETS (S404) AND (S406)
- ROOF ANCHOR, SEE DETAIL (C3/ST03). SEE ARCH DWG FOR LOCATION
- SFRSC CONNECTION, SEE (S400) SHEETS FOR DETAILS
- INDICATES PERFORATED ROOF DECK, SEE ARCH

SNOW DRIFT LOADING DIAGRAM

D-1 MAX = 115 PSF L =23'-0"
D-2 MAX = 65 PSF L =13'-0"

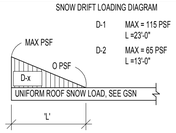

KEY PLAN

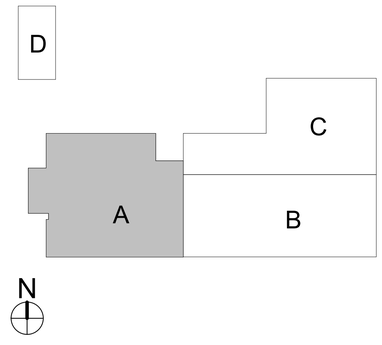

APRIL 21, 2014
BID SET

NOTE:
THESE STRUCTURAL DRAWINGS ARE BASED ON ARCHITECTURAL DRAWINGS DATED APRIL 10, 2014

DIMENSIONS AND ELEVATIONS, AS THEY RELATE TO THE BUILDING IN GENERAL, i.e. GRID TO GRID DIMENSIONS OR DECK BEARING ELEVATIONS, ARE SUPPLIED BY THE ARCHITECT. THEY ARE PROVIDED ON THE STRUCTURAL PLANS AND DETAILS FOR THE CONVENIENCE OF THE CONTRACTOR. VERIFY DIMENSIONS AND ELEVATIONS WITH ARCHITECTURAL DRAWINGS.

DUNN ASSOCIATES, INC
Consulting Structural Engineers
WWW.DUNN-SE.COM
PH: 801-575-8877 FAX: 801-575-8875

CRSA
649 E. South Temple
Salt Lake City, UT 84102
801.355.5915

MWL
11798 N. Lakeridge Pkwy.
Ashland, VA 23005
804-228-7473

State of Utah
Department of Administrative Services
Division of Facilities Construction & Management
4110 State Office Building
Salt Lake City, Utah 84114
Phone: (801) 538 - 3018
Fax: (801) 538 - 3267

DFCM APPROVAL STAMP

ARCHITECT-ENGINEER STAMP

Unified State Laboratory Module 2

4451 South 2700 West, Taylorsville, UT 84118

DFCM #: 13020300
Project #: 13062

DATE:	ISSUE TYPE:
APRIL 21, 2014	BID SET
MAY 08, 2014	ADD # 1

CHECKED BY	TAK
DRAWN BY	SJS

PENTHOUSE FLOOR/ ROOF FRAMING PLAN - AREA A

S104A

VOLUME 1

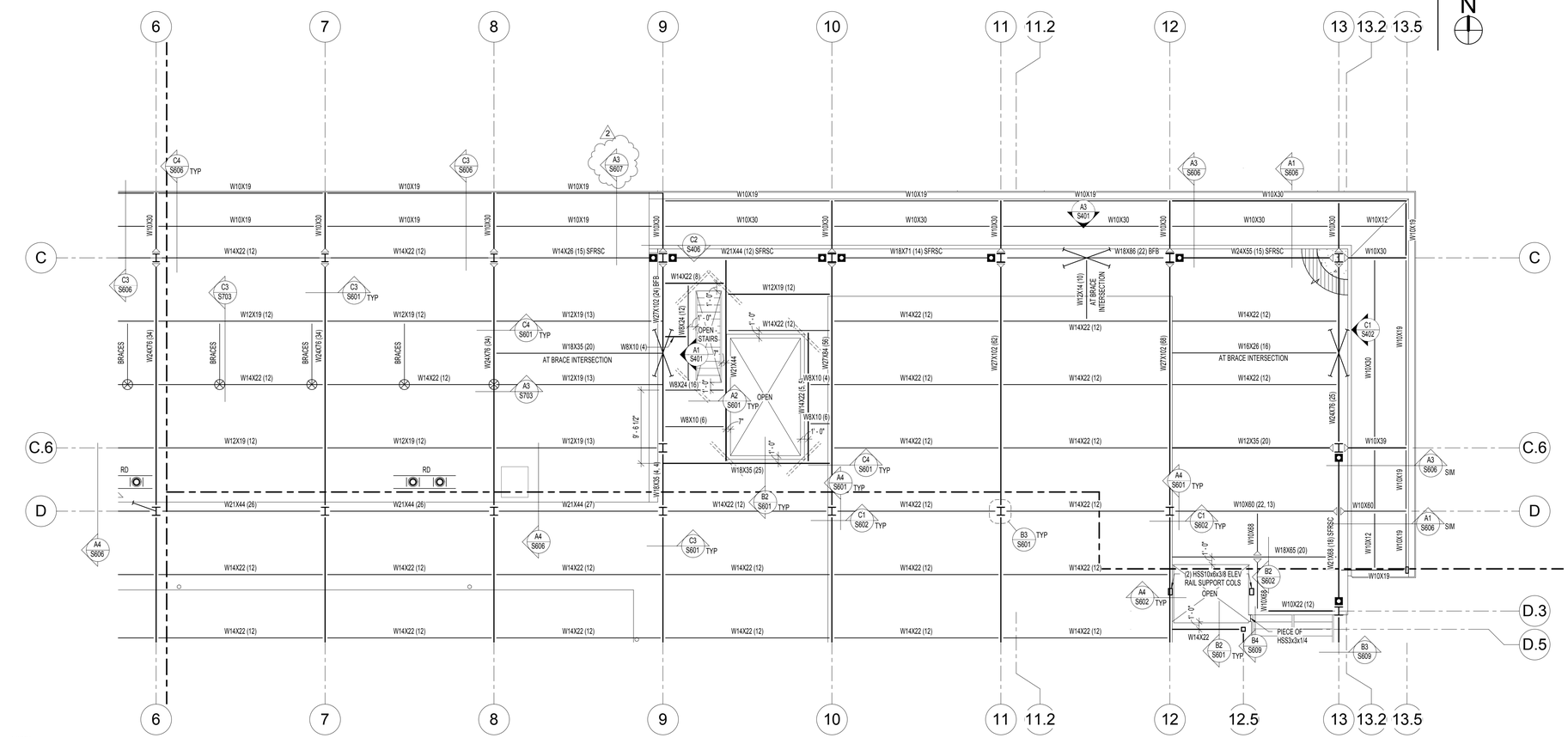

B1 / S104C PENTHOUSE FLOOR/ ROOF FRAMING PLAN - AREA C

SCALE: 1/8" = 1'-0"

ROOF FRAMING PLAN NOTES:

1. VERIFY ROOF SLOPES, DRAINS, AND DECK BEARING ELEVATIONS WITH ARCHITECTURAL DRAWINGS. SEE ROOF FRAMING DETAILS ON SHEET (S701).
2. ALL JOISTS SHALL BE FLUSH FRAMED. UNO.
3. ALL ROOF OPENINGS SHALL BE FRAMED AS INDICATED IROOF FRAMING DETAILS ON SHEET (S701).
4. SEE ROOF FRAMING DETAILS ON SHEET (S701) FORCONCENTRATED LOADS LOCATED FURTHER THAN 6" FROM JOIST/GIRDER PANEL JOINT.
5. SEE ROOF FRAMING DETAILS ON SHEET (S701) FORMECHANICAL UNITS HUNG BELOW JOISTS.
6. VERIFY SIZE, WEIGHT, AND LOCATION OF ALL ROOF TOP MECHANICAL UNITS WITH ARCHITECTURAL AND MECHANICAL DRAWINGS. SEE ROOF FRAMING DETAILS ON SHEET (S701) FOR STEEL FRAMES AT ALL ROOF TOP EQUIPMENT. COORDINATE OPENINGS WITH MECHANICAL, ELECTRICAL, AND GENERAL CONTRACTORS.
7. OPEN WEB STEEL JOISTS AND JOIST GIRDERS SHALL BE DESIGNATED BY THE MANUFACTURER TO SUPPORT THE MECHANICAL AND LATERAL LOADS SHOWN ON THE ROOFFRAMING PLANS IN ADDITION TO THE UNIFORM AND POINT LOADS SHOWN.
8. WHERE SKYLIGHTS OR MECHANICAL UNITS INTERRUPT HORIZONTAL BRIDGING, PROVIDE CROSS BRIDGING AT JOIST SPACES ON EA SIDE. TYPICAL.
9. WHERE DIAGONAL BRIDGING CONFLICTS WITH MECHANICAL DUCTS, REMOVE DIAGONAL BRIDGING AND REPLACE WITH HORIZONTAL BRIDGING (AFTER ROOF DECK IS IN PLACE).
10. * - INDICATES THAT THESE JOISTS SHALL BE DESIGNED FOR AN ADLOAD OF 1000# AT ANY TOP CHORD PANEL POINT. THIS LOAD IS TO BE ADDED TO THE GIRDER TOP CHORD LOAD. MULTIPLE "*" ARE ADDITIVE.
11. JOIST DESIGNER SHALL DESIGN JOISTS AND SUPPLY ADDITIONAL BRIDGING AS REQUIRED FOR 8 PSF NET UPLIFT DITO WIND. THERE IS NO UPLIFT ON GIRDERS.
12. SEE SHEETS (S401) AND (S402) FOR FRAME ELEVATIONS.
13. SEE ARCHITECTURAL PLANS FOR ALL STEEL COLUMN LOCATIONS (DIMENSIONS).
14. SPRINKLER DESIGNER SHALL COORDINATE THE SPRINKLER DESIGN WITH THE JOIST/GIRDER SHOP DRAWINGS.

MARKS AND SYMBOLS LEGEND

- SECTION MARK / SHEET NUMBER
- FRAME EL MARK FRAME / EL ON (S400's)
- MTL ROOF DECK, SEE GSN ON (S101)
- BRG WALL BLW
- STL COL, SEE SCHED ON (S304)
- LATERAL FRAME MOMENT CONNECTIONS
- GRAVITY MOMENT CONNECTIONS
- SFRSC CONNECTION, SEE (S400) SHEETS FOR DETAILS
- DOUBLE SHEAR CONNECTION, SEE SCHED ON (S303)
- ML-x — MAS LINTEL. SEE SCHED ON (S301)
- T=C=xK — ROOF JST TOP CHORD SHALL BE DESIGNED FOR AN ADDITIONAL LOAD OF _ KIPS IN TENSION AND COMPRESSION. LOADS ARE PROVIDED AT ULTIMATE STRENGTH LEVEL
- RD — ROOF DRAIN. SEE ARCH AND MECH FOR EXACT LOCATION. SEE DET (B3/S701) FOR FRAMING
- (SFRSC) — SEISMIC FORCE RESISTING SYSTEM COLLECTOR. SEE DETS ON SHEET (S405) FOR CONNECTIONS
- L3 — L3x3 1/4 BRACE, SEE (S400) SHEETS FOR ADDITIONAL INFORMATION
- L4 — L4x4x3/8 FRAME BRACING, SEE DETAILS ON (S404) AND (S406)
- L5 — L5x5x3/8 FRAME BRACING, SEE DETAILS ON SHEETS (S404) AND (S406)
- ROOF ANCHOR, SEE DETAIL (C3/S703). SEE ARCH DWG FOR LOCATION
- OWSJ (XXX/XXX) — OPEN WEB STEEL JOIST (TOTAL LOAD/ LIVE LOAD)
- INDICATES PERFORATED ROOF DECK, SEE ARCH

SNOW DRIFT LOADING DIAGRAM

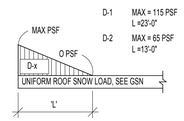

D-1 MAX = 115 PSF L =23'-0"
D-2 MAX = 65 PSF L =13'-0"

APRIL 21, 2014
BID SET

NOTE:
THESE STRUCTURAL DRAWINGS ARE BASED ON ARCHITECTURAL DRAWINGS DATED APRIL 10, 2014

DIMENSIONS AND ELEVATIONS, AS THEY RELATE TO THE BUILDING IN GENERAL, i.e. GRID TO GRID DIMENSIONS OR DECK BEARING ELEVATIONS, ARE SUPPLIED BY THE ARCHITECT. THEY ARE PROVIDED ON THE STRUCTURAL PLANS AND DETAILS FOR THE CONVENIENCE OF THE CONTRACTOR. VERIFY DIMENSIONS AND ELEVATIONS WITH ARCHITECTURAL DRAWINGS.

DUNN ASSOCIATES, INC
Consulting Structural Engineers
WWW.DUNN-SE.COM
PH: 801-575-8877 FAX: 801-575-8875

KEY PLAN

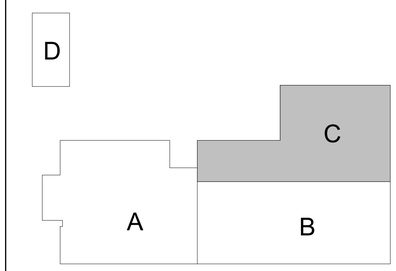

CRSA
649 E. South Temple
Salt Lake City, UT 84102
801.355.5915

MWL
11798 N. Lakeridge Pkwy.
Ashland, VA 23005
804-228-7473

State of Utah
Department of Administrative Services
Division of Facilities Construction & Management
4110 State Office Building
Salt Lake City, Utah 84114
Phone: (801) 538 - 3018
Fax: (801) 538 - 3267

DFCM APPROVAL STAMP

ARCHITECT-ENGINEER STAMP

Unified State Laboratory Module 2

4451 South 2700 West, Taylorsville, UT 84118

DFCM #: 13020300

Project #: 13062

DATE:	ISSUE TYPE:
APRIL 21, 2014	BID SET
MAY 08, 2014	ADD # 1

CHECKED BY	TAK
DRAWN BY	SJS

PENTHOUSE FLOOR/ ROOF FRAMING PLAN - AREA C

S104C

VOLUME 1

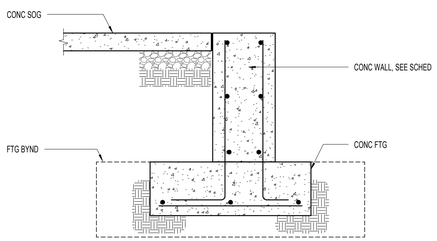

C1 S503 EXTERIOR FOUNDATION WALL
NO SCALE:

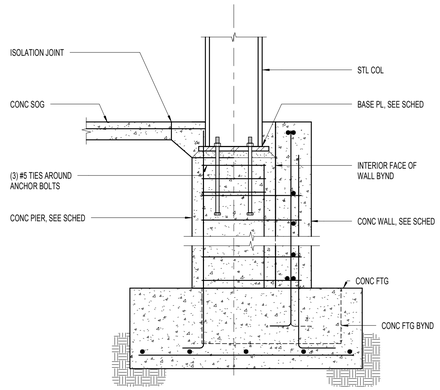

C2 S503 EXTERIOR COLUMN, PIER, AND FOOTING
NO SCALE:

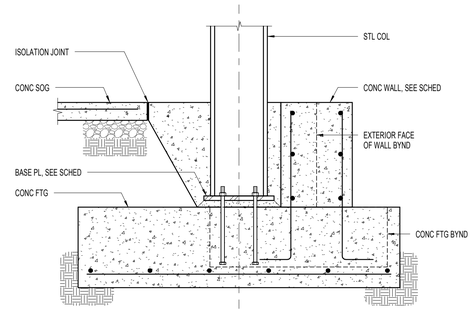

C3 S503 EXTERIOR COLUMN AND FOOTING
NO SCALE:

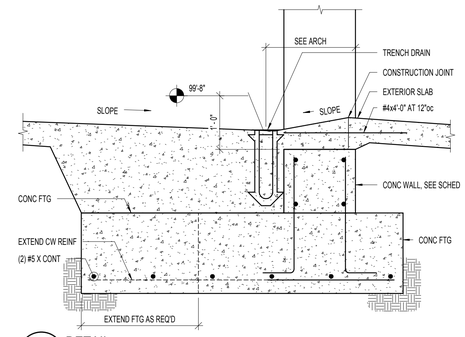

C4 S503 DETAIL
NO SCALE:

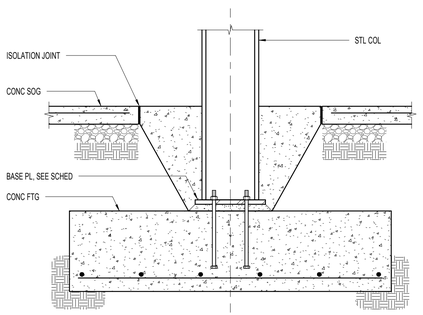

B1 S503 INTERIOR COLUMN AND FOOTING
NO SCALE:

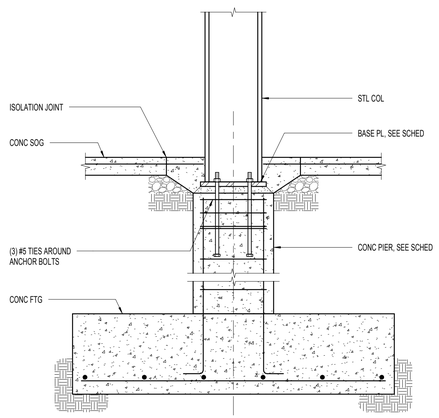

B2 S503 INTERIOR COLUMN, PIER, AND FOOTING
NO SCALE:

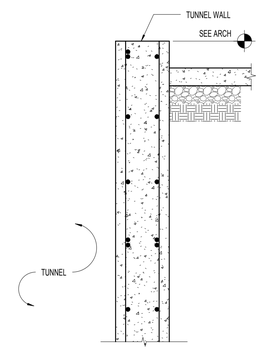

B3 S503 DETAIL
NO SCALE:

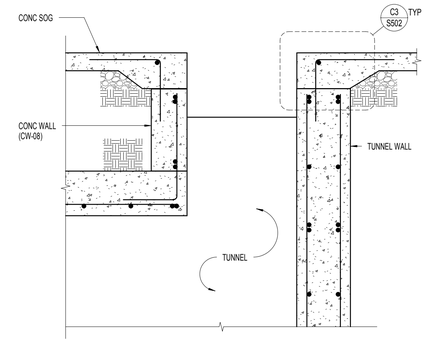

B4 S503 DETAIL
NO SCALE:

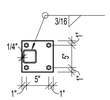

SECTION A - A

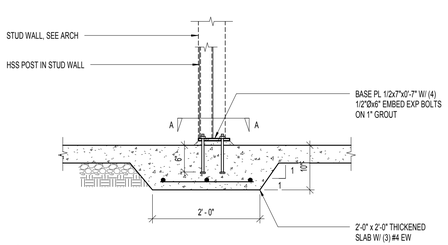

2
A1 S503 AUTOPSY SINK SUPPORT POST
NO SCALE:

APRIL 21, 2014
BID SET

NOTE:
THESE STRUCTURAL DRAWINGS ARE BASED ON ARCHITECTURAL DRAWINGS DATED APRIL 10, 2014

DIMENSIONS AND ELEVATIONS, AS THEY RELATE TO THE BUILDING IN GENERAL, i.e. GRID TO GRID DIMENSIONS OR DECK BEARING ELEVATIONS, ARE SUPPLIED BY THE ARCHITECT. THEY ARE PROVIDED ON THE STRUCTURAL PLANS AND DETAILS FOR THE CONVENIENCE OF THE CONTRACTOR. VERIFY DIMENSIONS AND ELEVATIONS WITH ARCHITECTURAL DRAWINGS.

DUNN
DUNN ASSOCIATES, INC
Consulting Structural Engineers
WWW.DUNN-SE.COM
PH: 801-575-8877 FAX: 801-575-8875

CRSA
649 E. South Temple
Salt Lake City, UT 84102
801.355.5915

MWL
11798 N. Lakeridge Pkwy.
Ashland, VA 23005
804-228-7473

State of Utah
Department of Administrative Services
Division of Facilities Construction & Management
4110 State Office Building
Salt Lake City, Utah 84114
Phone: (801) 538 - 3018
Fax: (801) 538 - 3267

DFCM APPROVAL STAMP

ARCHITECT-ENGINEER STAMP

Unified State Laboratory Module 2

4451 South 2700 West, Taylorsville, UT 84118

DFCM #: 13020300
Project #: 13062

DATE:	ISSUE TYPE:
APRIL 21, 2014	BID SET
MAY 08, 2014	ADD # 1

CHECKED BY	TAK
DRAWN BY	SJS

FOOTING AND FOUNDATION DETAILS

S503

VOLUME 1

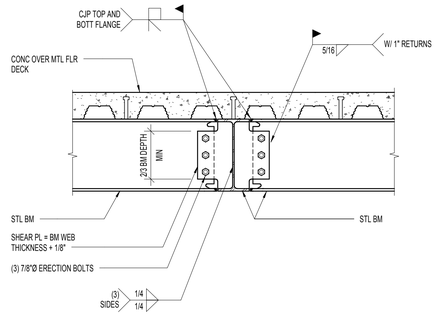

C1 / S604 CANTILEVERED BEAM AT BEAM OF EQUAL DEPTH

NO SCALE:

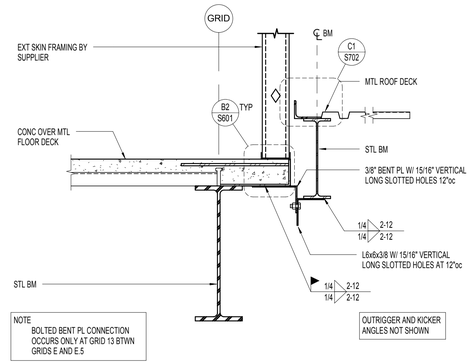

C2 / S604 CANOPY ATTACHMENT TO BUILDING

NO SCALE:

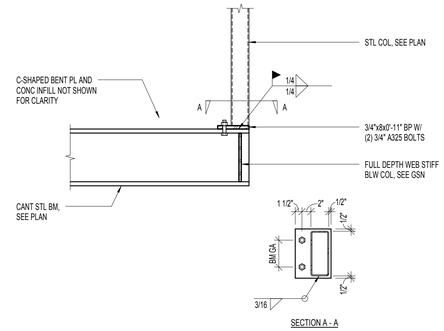

C3 / S604 DETAIL

NO SCALE:

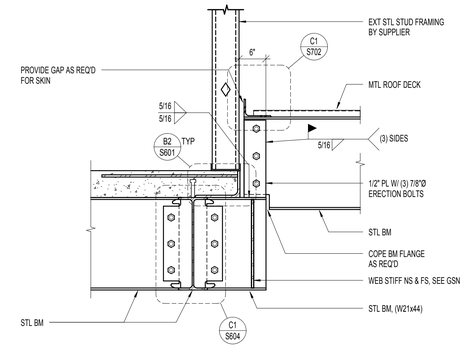

C4 / S604 ROOF BEAM TO FLOOR BEAM CONNECTION

NO SCALE:

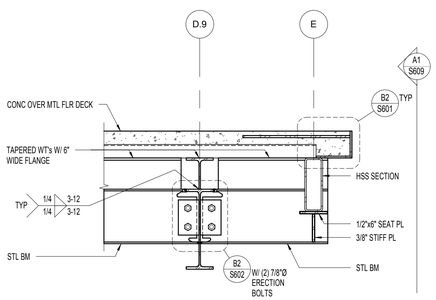

B1 / S604 LOW CANTILEVERED BEAM

NO SCALE:

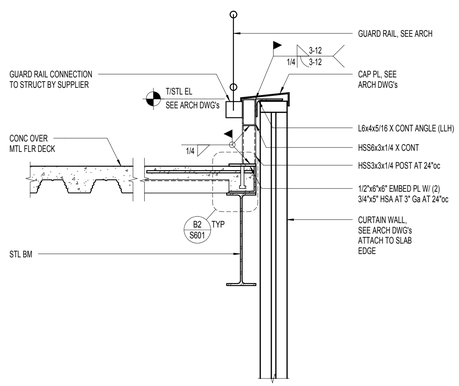

B2 / S604 DETAIL

NO SCALE:

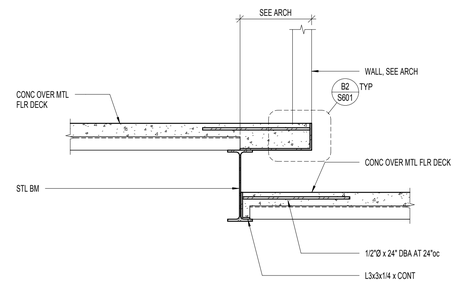

B3 / S604 DETAIL

NO SCALE:

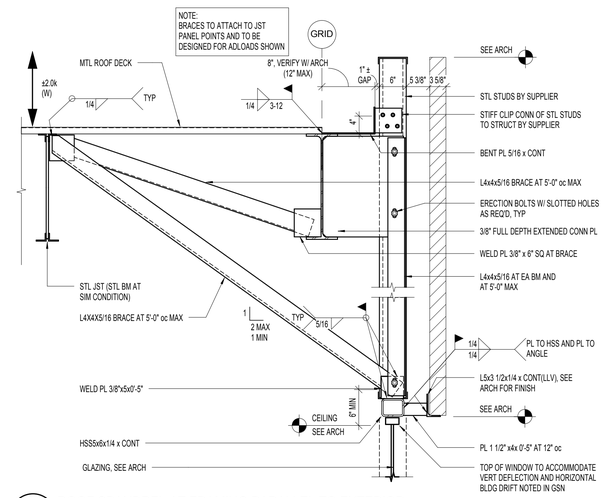

B4 / S604 ROOF SPANDREL AT FRAMING PARALLEL TO EXTERIOR

NO SCALE:

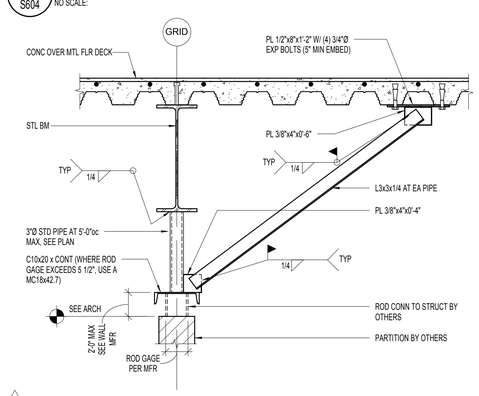

A1 / S604 TYPICAL PARTITION WALL SUPPORT FRAMING

NO SCALE:

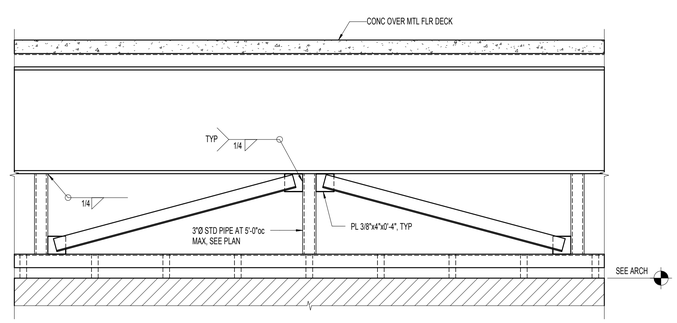

A2 / S604 TYPICAL IN PLANE BRACING OF PARTITION WALL ON-GRID

NO SCALE:

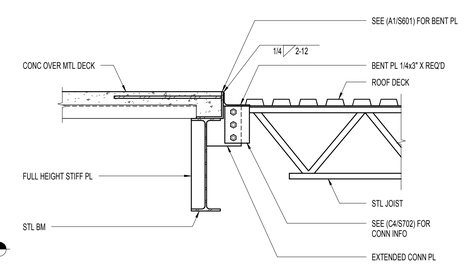

A3 / S604 ROOF CONNECTION DETAIL

NO SCALE:

APRIL 21, 2014
BID SET

NOTE:
THESE STRUCTURAL DRAWINGS ARE BASED ON ARCHITECTURAL DRAWINGS DATED APRIL 10, 2014

DIMENSIONS AND ELEVATIONS, AS THEY RELATE TO THE BUILDING IN GENERAL, i.e. GRID TO GRID DIMENSIONS OR DECK BEARING ELEVATIONS, ARE SUPPLIED BY THE ARCHITECT. THEY ARE PROVIDED ON THE STRUCTURAL PLANS AND DETAILS FOR THE CONVENIENCE OF THE CONTRACTOR. VERIFY DIMENSIONS AND ELEVATIONS WITH ARCHITECTURAL DRAWINGS.

DUNN ASSOCIATES, INC
Consulting Structural Engineers
WWW.DUNN-SE.COM
PH: 801-575-8877 FAX: 801-575-8875

CRSA
649 E. South Temple
Salt Lake City, UT 84102
801.355.5915

MWL
11798 N. Lakeridge Pkwy.
Ashland, VA 23005
804-228-7473

State of Utah
Department of Administrative Services
Division of Facilities Construction & Management
4110 State Office Building
Salt Lake City, Utah 84114
Phone: (801) 538 - 3018
Fax: (801) 538 - 3267

DFCM APPROVAL STAMP

ARCHITECT-ENGINEER STAMP

Unified State Laboratory Module 2

4451 South 2700 West, Taylorsville, UT 84118

DFCM #:	13020300
Project #:	13062

DATE:	ISSUE TYPE:
APRIL 21, 2014	BID SET
MAY 08, 2014	ADD # 1
CHECKED BY	TAK
DRAWN BY	SJS

FLOOR FRAMING DETAILS

S604

VOLUME 1

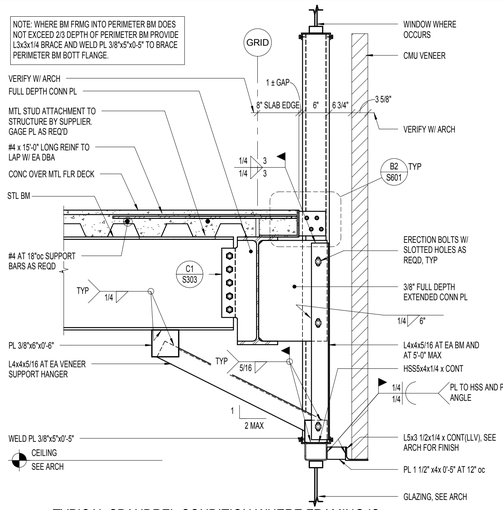

C1 S606 TYPICAL SPANDREL CONDITION WHERE FRAMING IS PERPENDICULAR TO EXTERIOR
NO SCALE:

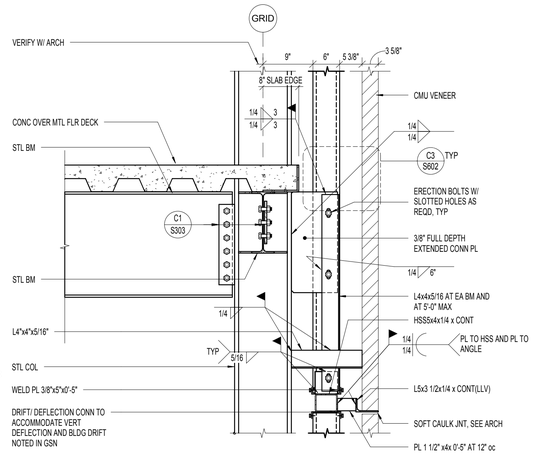

C2 S606 TYPICAL SPANDREL CONDITION AT STEEL COLUMN / CMU PIER
NO SCALE:

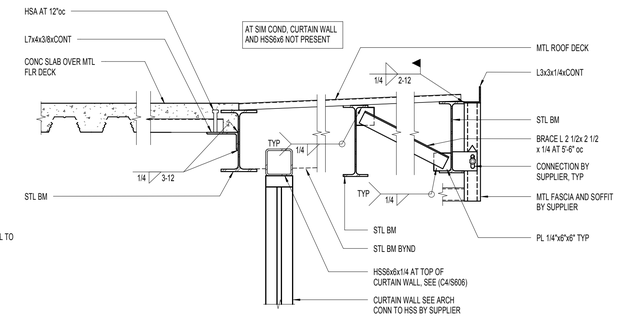

C3 S606 ROOF DETAIL
NO SCALE:

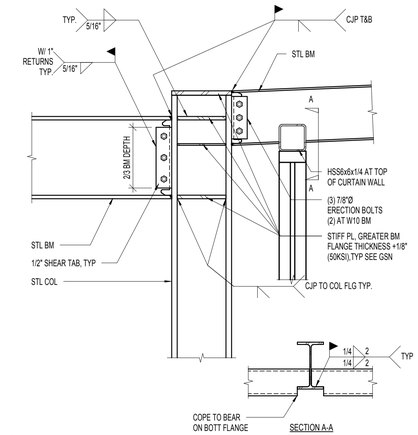

C4 S606 ROOF DETAIL
NO SCALE:

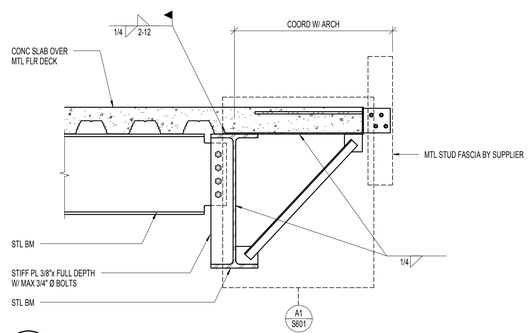

B1 S606 FLOOR DETAIL
NO SCALE:

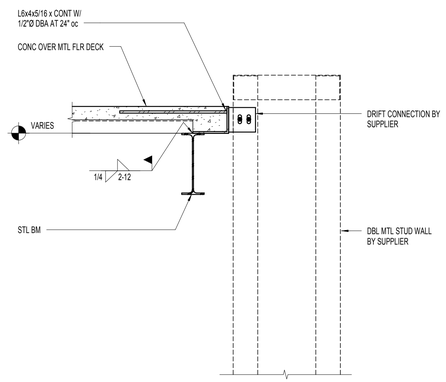

B2 S606 FLOOR DETAIL
NO SCALE:

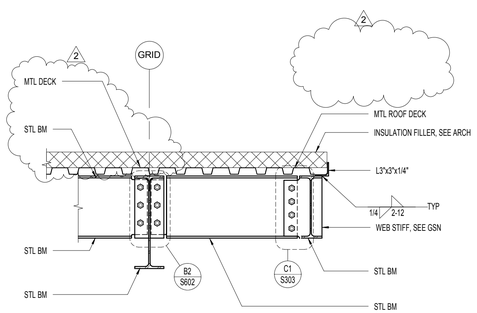

B3 S606 FLOOR DETAIL
NO SCALE:

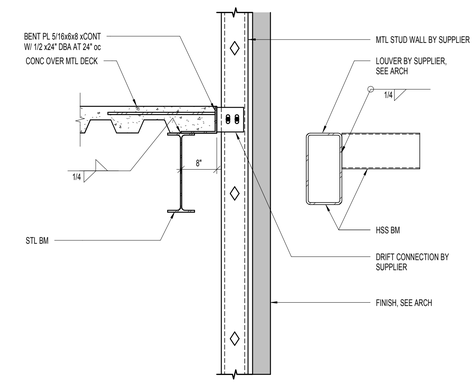

B4 S606 FLOOR DETAIL
NO SCALE:

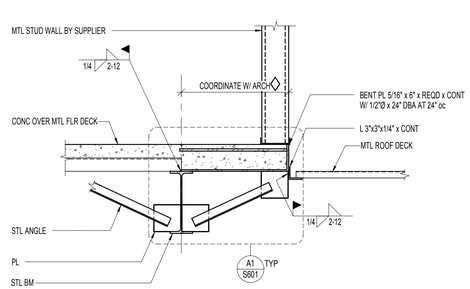

A1 S606 FLOOR DETAIL
NO SCALE:

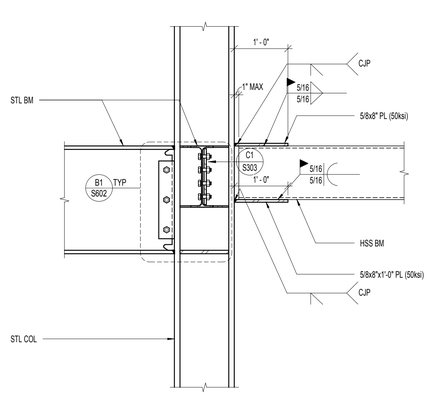

A2 S606 EYEBROW CANTILEVER DETAIL
NO SCALE:

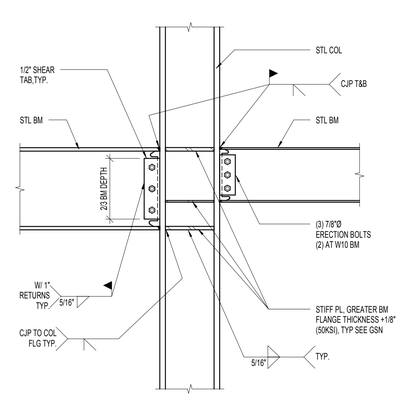

A3 S606 FLOOR DETAIL
NO SCALE:

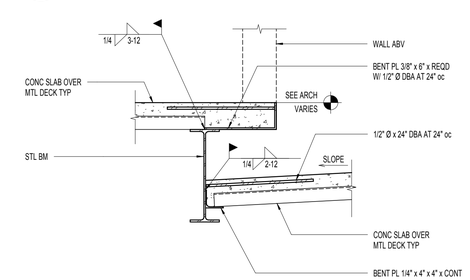

A4 S606 FLOOR DETAIL
NO SCALE:

APRIL 21, 2014
BID SET

NOTE:
THESE STRUCTURAL DRAWINGS ARE BASED ON ARCHITECTURAL DRAWINGS DATED APRIL 10, 2014

DIMENSIONS AND ELEVATIONS, AS THEY RELATE TO THE BUILDING IN GENERAL, i.e. GRID TO GRID DIMENSIONS OR DECK BEARING ELEVATIONS, ARE SUPPLIED BY THE ARCHITECT. THEY ARE PROVIDED ON THE STRUCTURAL PLANS AND DETAILS FOR THE CONVENIENCE OF THE CONTRACTOR. VERIFY DIMENSIONS AND ELEVATIONS WITH ARCHITECTURAL DRAWINGS.

DUNN ASSOCIATES, INC
Consulting Structural Engineers
WWW.DUNN-SE.COM
PH: 801-575-8877 FAX: 801-575-8875

CRSA
649 E. South Temple
Salt Lake City, UT 84102
801.355.5915

MWL
11798 N. Lakeridge Pkwy.
Ashland, VA 23005
804-228-7473

State of Utah
Department of Administrative Services
Division of Facilities Construction & Management
4110 State Office Building
Salt Lake City, Utah 84114
Phone: (801) 538 - 3018
Fax: (801) 538 - 3267

DFCM APPROVAL STAMP

ARCHITECT-ENGINEER STAMP

Unified State Laboratory Module 2

4451 South 2700 West, Taylorsville, UT 84118

DFCM #:	13020300
Project #:	13062

DATE:	ISSUE TYPE:
APRIL 21, 2014	BID SET
MAY 08, 2014	ADD # 1
CHECKED BY	TAK
DRAWN BY	SJS

FLOOR FRAMING DETAILS

S606

VOLUME 1

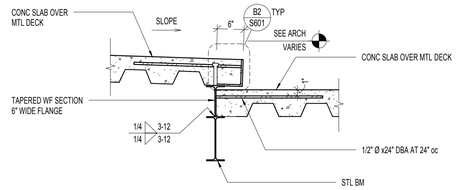

C1 S607 CONCRETE ROOF STEP
NO SCALE:

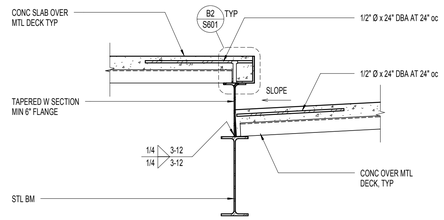

C2 S607 CONCRETE ROOF STEP
NO SCALE:

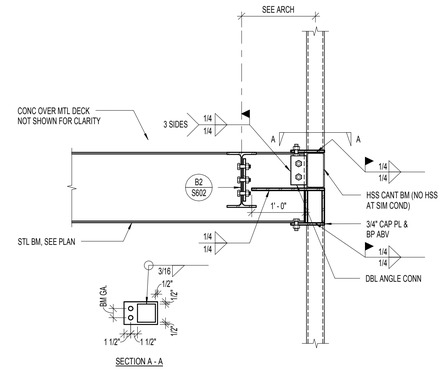

C3 S607 DETAIL
NO SCALE:

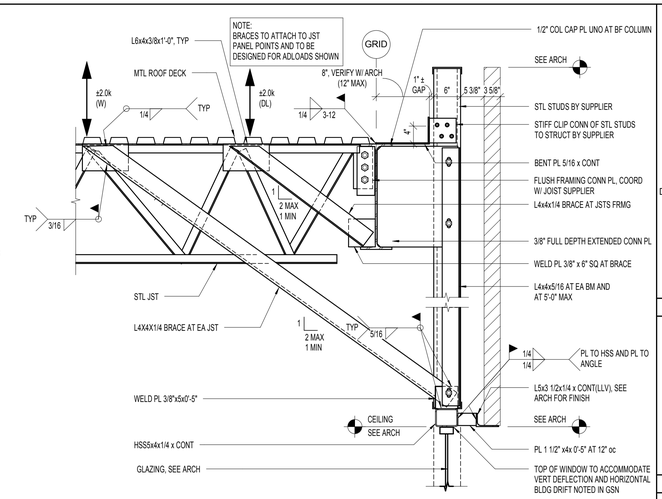

C4 S607 DETAIL
NO SCALE:

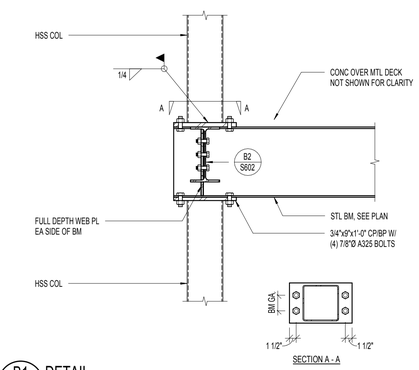

B1 S607 DETAIL
NO SCALE:

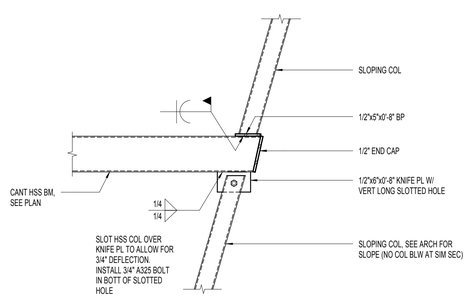

B2 S607 DETAIL
NO SCALE:

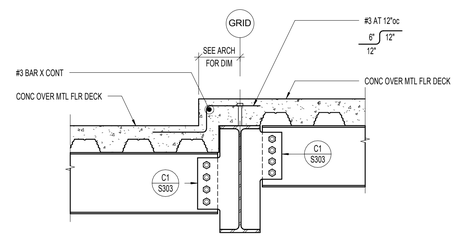

B3 S607 BEAM CONNECTION AT FLOOR RECESS
NO SCALE:

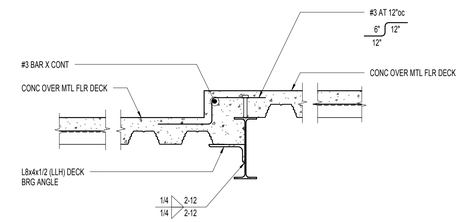

B4 S607 FLOOR RECESS
NO SCALE:

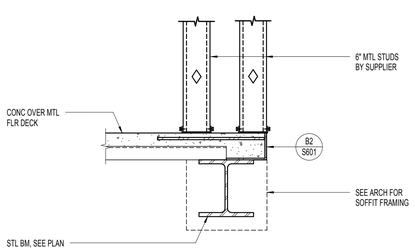

A1 S607 DETAIL
NO SCALE:

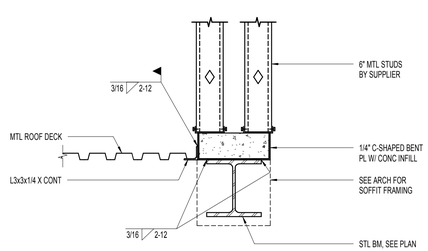

A2 S607 DETAIL
NO SCALE:

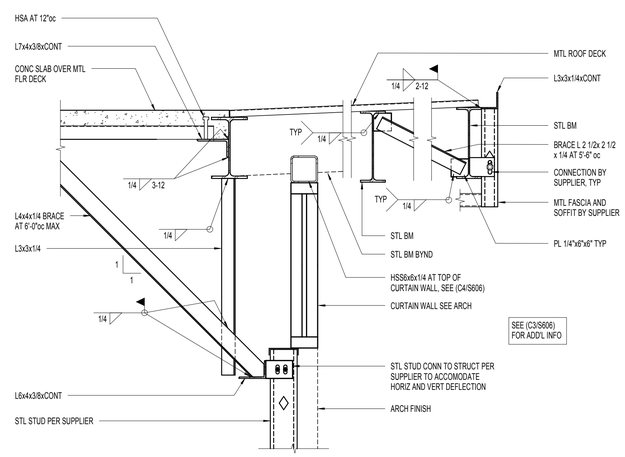

A3 S607 DETAIL
NO SCALE:

APRIL 21, 2014
BID SET

NOTE:
THESE STRUCTURAL DRAWINGS ARE BASED ON ARCHITECTURAL DRAWINGS DATED APRIL 10, 2014

DIMENSIONS AND ELEVATIONS, AS THEY RELATE TO THE BUILDING IN GENERAL, i.e. GRID TO GRID DIMENSIONS OR DECK BEARING ELEVATIONS, ARE SUPPLIED BY THE ARCHITECT. THEY ARE PROVIDED ON THE STRUCTURAL PLANS AND DETAILS FOR THE CONVENIENCE OF THE CONTRACTOR. VERIFY DIMENSIONS AND ELEVATIONS WITH ARCHITECTURAL DRAWINGS.

DUNN ASSOCIATES, INC
Consulting Structural Engineers
WWW.DUNN-SE.COM
PH: 801-575-8877 FAX: 801-575-8875

CRSA
649 E. South Temple
Salt Lake City, UT 84102
801.355.5915

MWL
11798 N. Lakeridge Pkwy.
Ashland, VA 23005
804-228-7473

State of Utah
Department of Administrative Services
Division of Facilities Construction & Management
4110 State Office Building
Salt Lake City, Utah 84114
Phone: (801) 538 - 3018
Fax: (801) 538 - 3267

DFCM APPROVAL STAMP

ARCHITECT-ENGINEER STAMP

Unified State Laboratory Module 2

4451 South 2700 West, Taylorsville, UT 84118

DFCM #:	13020300
Project #:	13062

DATE:	ISSUE TYPE:
APRIL 21, 2014	BID SET
MAY 08, 2014	ADD # 1

CHECKED BY	TAK
DRAWN BY	SJS

FLOOR FRAMING DETAILS

S607

VOLUME 1

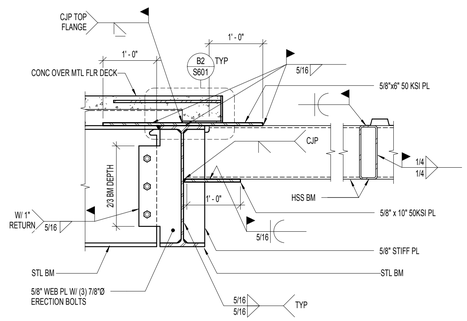

C1 S609 EYEBROW CANTILEVERED AT BEAM
NO SCALE:

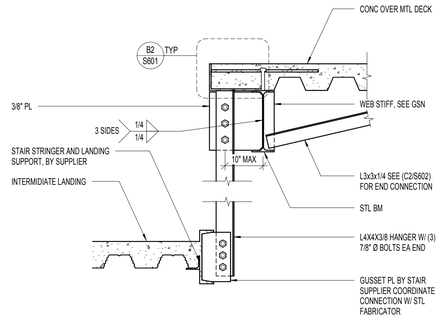

C2 S609 HANGER AT INTERMEDIATE LANDING
NO SCALE:

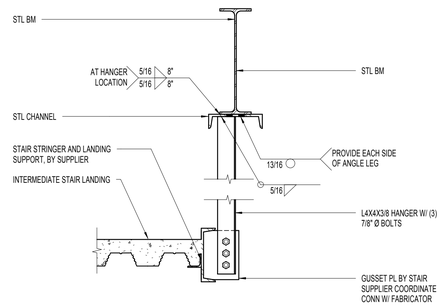

C3 S609 HANGER AT INTERMEDIATE LANDING
NO SCALE:

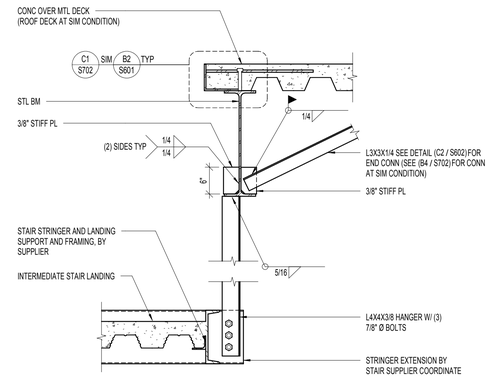

C4 S609 HANGER AT INTERMEDIATE LANDING
NO SCALE:

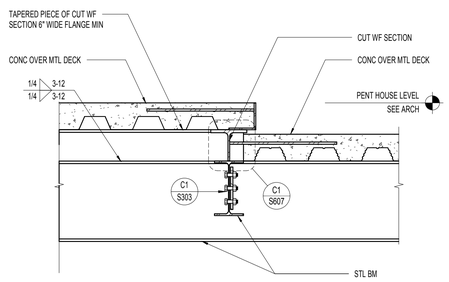

B1 S609 STEP DETAIL
NO SCALE:

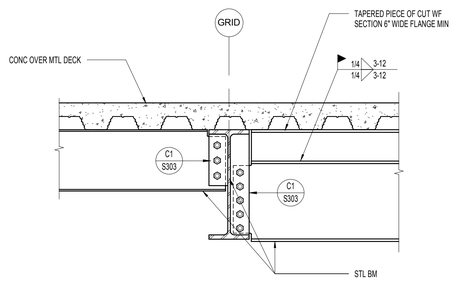

B2 S609 LOW FRAMING BELOW PENTHOUSE
NO SCALE:

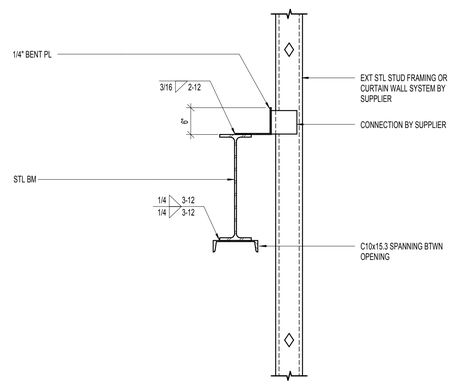

B3 S609 EXTERIOR FRAMING AT STAIR OPENING
NO SCALE:

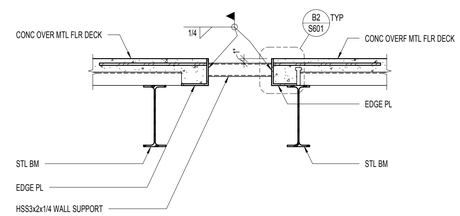

B4 S609 WALL SUPPORT BETWEEN SHAFTS
NO SCALE:

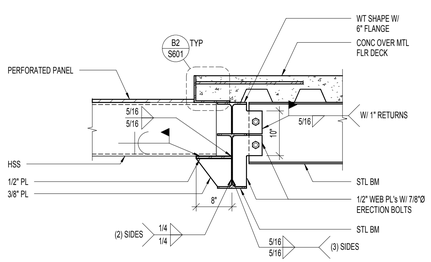

A1 S609 CONNECTION AT LOW BEAM
NO SCALE:

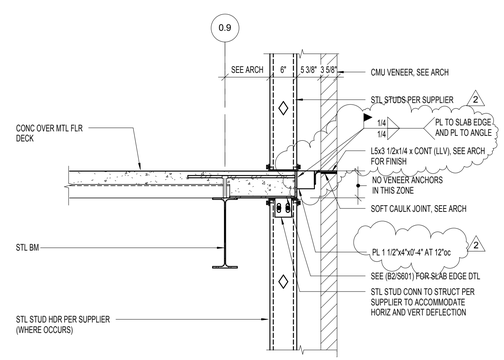

A2 S609 BRICK LEDGE DETAIL AT CONCRETE FLOOR
NO SCALE:

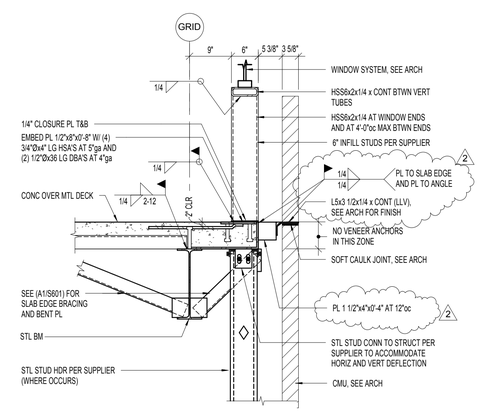

A3 S609 BRICK LEDGE DETAIL AT CONCRETE FLOOR
NO SCALE:

APRIL 21, 2014
BID SET

NOTE:
THESE STRUCTURAL DRAWINGS ARE BASED ON ARCHITECTURAL DRAWINGS DATED APRIL 10, 2014

DIMENSIONS AND ELEVATIONS, AS THEY RELATE TO THE BUILDING IN GENERAL, i.e. GRID TO GRID DIMENSIONS OR DECK BEARING ELEVATIONS, ARE SUPPLIED BY THE ARCHITECT. THEY ARE PROVIDED ON THE STRUCTURAL PLANS AND DETAILS FOR THE CONVENIENCE OF THE CONTRACTOR. VERIFY DIMENSIONS AND ELEVATIONS WITH ARCHITECTURAL DRAWINGS.

DUNN ASSOCIATES, INC
Consulting Structural Engineers
WWW.DUNN-SE.COM
PH: 801-575-8877 FAX: 801-575-8875

CRSA
649 E. South Temple
Salt Lake City, UT 84102
801.355.5915

MWL
11798 N. Lakeridge Pkwy.
Ashland, VA 23005
804-228-7473

State of Utah
Department of Administrative Services
DFCM
Division of Facilities Construction & Management
4110 State Office Building
Salt Lake City, Utah 84114
Phone: (801) 538 - 3018
Fax: (801) 538 - 3267

DFCM APPROVAL STAMP

ARCHITECT-ENGINEER STAMP

Unified State Laboratory Module 2

4451 South 2700 West, Taylorsville, UT 84118

DFCM #: 13020300

Project #: 13062

DATE:	ISSUE TYPE:
APRIL 21, 2014	BID SET
MAY 08, 2014	ADD # 1

CHECKED BY	TAK
DRAWN BY	SJS

FLOOR FRAMING DETAILS

S609

VOLUME 1

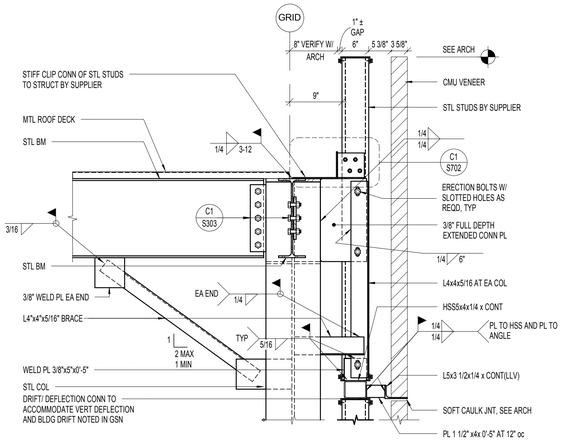

C1 S705 TYPICAL SPANDREL CONDITION AT STEEL COLUMN
NO SCALE:

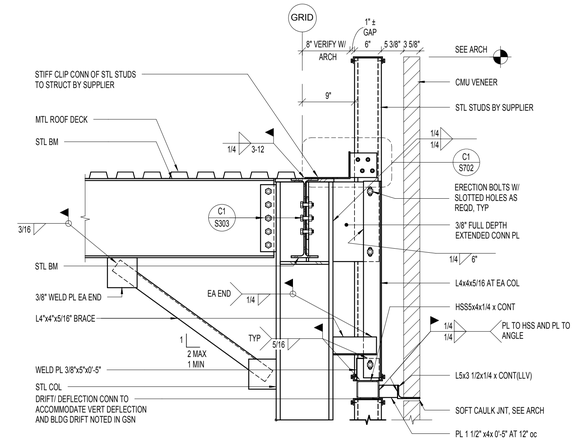

C2 S705 TYPICAL SPANDREL CONDITION AT STEEL COLUMN
NO SCALE:

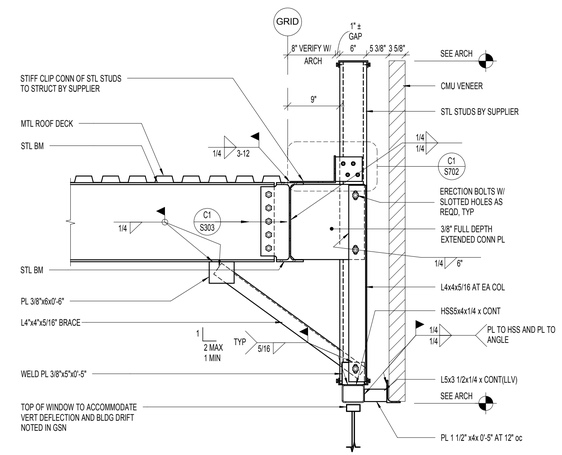

C3 S705 TYPICAL SPANDREL CONDITION AT ROOF FRAMING PERPENDICULAR TO EXTERIOR
NO SCALE:

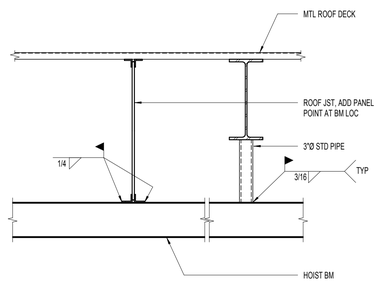

B1 S705 HOIST BEAM TO JOIST CONNECTION
NO SCALE:

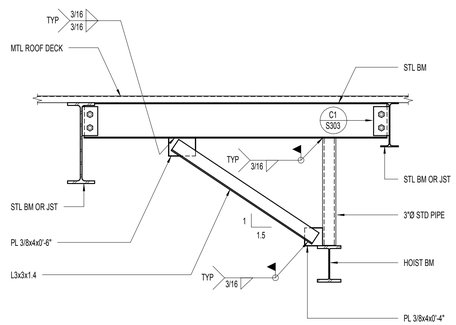

B2 S705 HOIST SUPPORT FRAMING
NO SCALE:

APRIL 21, 2014
BID SET

NOTE:
THESE STRUCTURAL DRAWINGS ARE BASED ON ARCHITECTURAL DRAWINGS DATED APRIL 10, 2014

DIMENSIONS AND ELEVATIONS, AS THEY RELATE TO THE BUILDING IN GENERAL, i.e. GRID TO GRID DIMENSIONS OR DECK BEARING ELEVATIONS, ARE SUPPLIED BY THE ARCHITECT. THEY ARE PROVIDED ON THE STRUCTURAL PLANS AND DETAILS FOR THE CONVENIENCE OF THE CONTRACTOR. VERIFY DIMENSIONS AND ELEVATIONS WITH ARCHITECTURAL DRAWINGS.

DUNN ASSOCIATES, INC
Consulting Structural Engineers
WWW.DUNN-SE.COM
PH: 801-575-8877 FAX: 801-575-8875

CRSA
649 E. South Temple
Salt Lake City, UT 84102
801.355.5915

MWL
11798 N. Lakeridge Pkwy.
Ashland, VA 23005
804-228-7473

State of Utah
Department of Administrative Services
Division of Facilities Construction & Management
4110 State Office Building
Salt Lake City, Utah 84114
Phone: (801) 538 - 3018
Fax: (801) 538 - 3267

DFCM APPROVAL STAMP

ARCHITECT-ENGINEER STAMP

Unified State Laboratory Module 2

4451 South 2700 West, Taylorsville, UT 84118

DFCM #:	13020300
Project #:	13062

DATE:	ISSUE TYPE:
APRIL 21, 2014	BID SET
MAY 08, 2014	ADD # 1

CHECKED BY	TAK
DRAWN BY	SJS

ROOF FRAMING DETAILS

S705

VOLUME 1

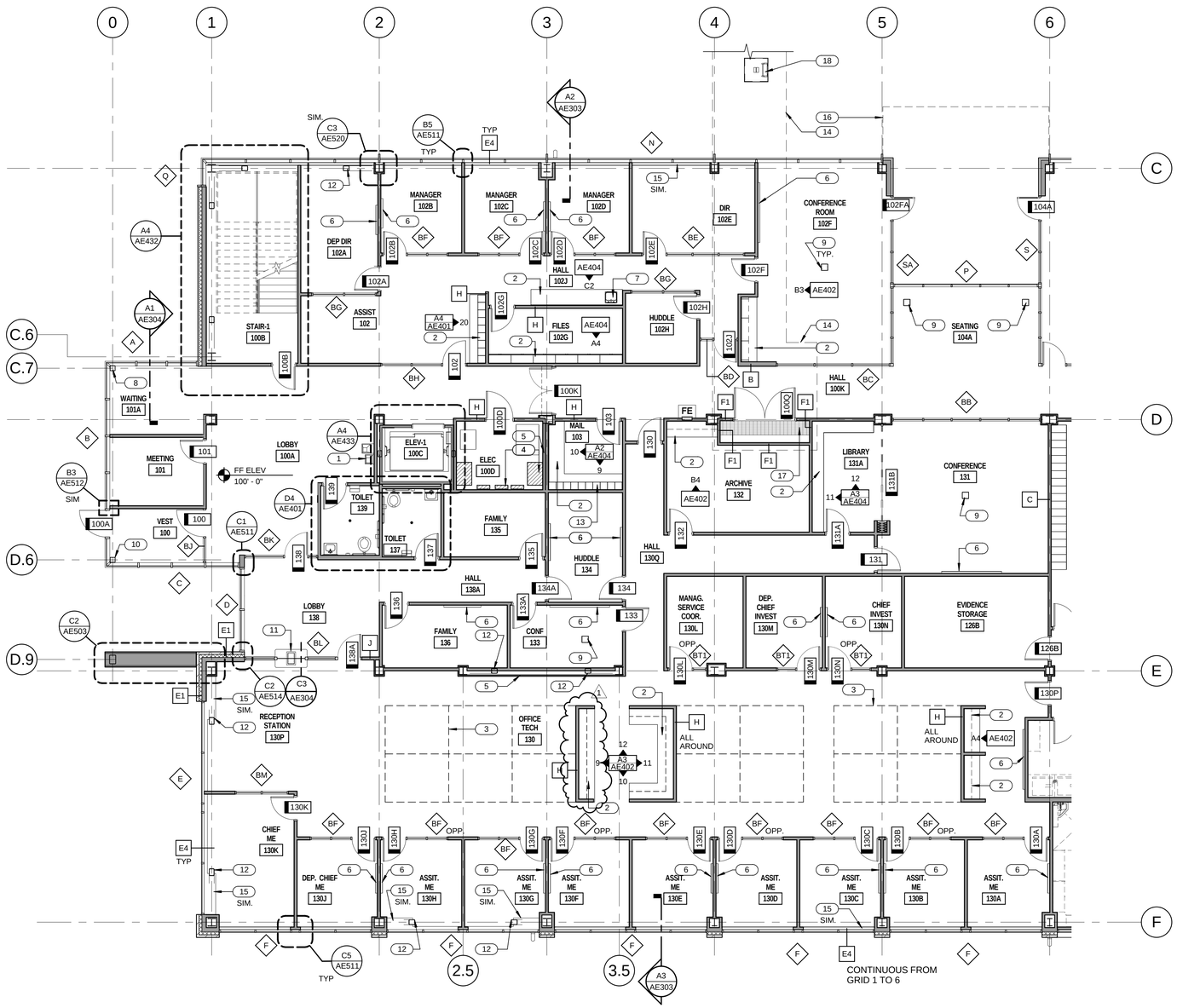

LEVEL 1 PLAN AREA A

1/8" = 1'-0"

GENERAL NOTES

- GENERAL CONTRACTOR SHALL FIELD VERIFY ALL CONDITIONS AND SHALL REPORT TO THE ARCHITECT ANY UNKNOWN CONDITIONS, ERRORS OR CONFLICTS IN THE DRAWINGS BEFORE BEGINNING WORK.
- DO NOT SCALE DRAWINGS.
- ITEMS SHOWN BY HIDDEN LINE ARE SPECIFIED BY OTHER SECTIONS.

ALL WALLS TO BE TYPE "A" U.N.O. ON PLAN — A

FIRE EXTINGUISHER — FE

KEYED NOTES

1. DRINKING FOUNTAIN. SEE PLUMBING DRAWINGS.
2. CASEWORK. SEE INTERIOR ELEVATIONS.
3. SPACE FOR CUBICLE.
4. ELECTRICAL PANEL. SEE ELECTRICAL DRAWINGS.
5. FURR WALL WITH WALL TYPE H. SEE FINISH PLANS FOR FINISH.
6. WHITEBOARD. SEE ACCESSORY SCHEDULE.
7. SINK. SEE PLUMBING DRAWINGS.
8. STEEL COLUMN. SEE STRUCTURAL. PAINT WHERE EXPOSED.
9. FLOOR BOX. SEE ELECTRICAL DRAWINGS.
10. STEEL COLUMN. SEE STRUCTURAL. FIREPROOF PER SPEC.
11. TRANSACTION COUNTER. SEE WINDOW TYPES.
12. BRACE FRAME. PAINT WHERE EXPOSED. SEE STRUCTURAL.
13. MAIL SLOTS. SEE INTERIOR ELEVATIONS.
14. TUNNEL BELOW.
15. WINDOW SIIL. SEE A3/AE405.
16. ROOF ABOVE.
17. STEEL GRATE. COORDINATE WITH MECHANICAL PIPING. SEE MECHANICAL DRAWINGS.
18. ESCAPE HATCH. SEE DETAIL C5/AE550.

KEY PLAN

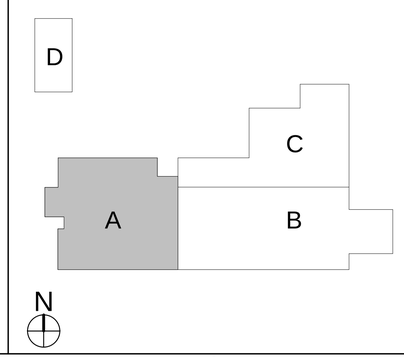

CRSA

649 E. South Temple
Salt Lake City, UT 84102
801.355.5915

MWL

11798 N. Lakeridge Pkwy.
Ashland, VA 23005
804-228-7473

State of Utah
Department of Administrative Services

Division of Facilities Construction & Management
4110 State Office Building
Salt Lake City, Utah 84114
Phone: (801) 538 - 3018
Fax: (801) 538 - 3267

DFCM APPROVAL STAMP

STATE OF UTAH #134096 MEHRDAD SAMII LICENSED ARCHITECT

04-28-2014

ARCHITECT-ENGINEER STAMP

Unified State Laboratory Module 2

4451 South 2700 West, Taylorsville, UT 84118

DFCM #: 13020300

Project #: B13-024

DATE:	ISSUE TYPE:
APRIL 21, 2014	BID SET
MAY 8, 2015	ADD # 1

CHECKED BY: J. NIELSEN

DRAWN BY: F. PITORE

LEVEL 1 PLAN AREA A

AE101A

VOLUME 1

C:\Users\fernando\Documents_A_13024_Modl_2013_fernando.rvt
5/8/2015 1:18:12 PM

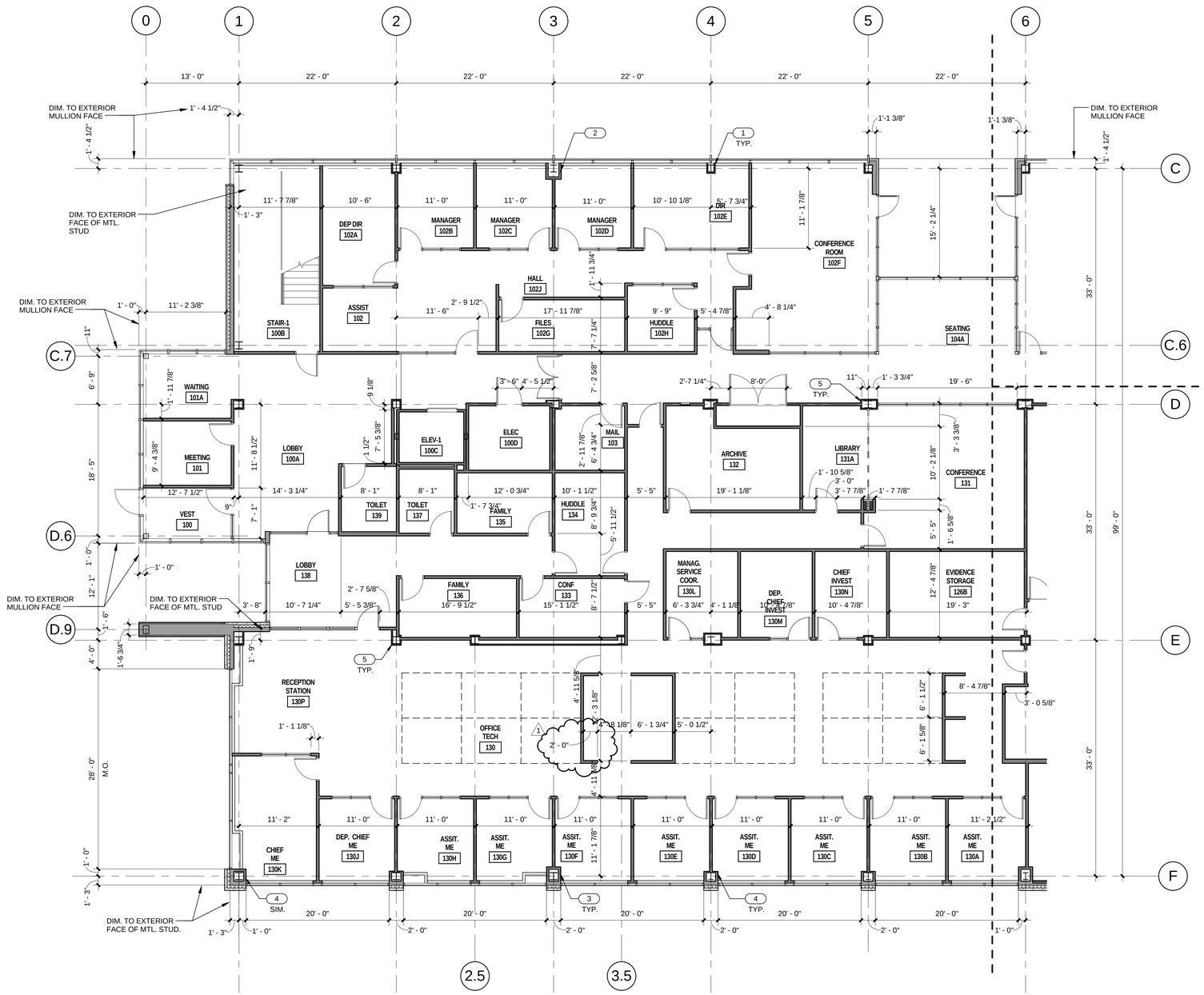

LEVEL 1 DIMENSION PLAN AREA A

1/8" = 1'-0"

A4 AE101A.D

N

GENERAL NOTES

- GENERAL CONTRACTOR SHALL FIELD VERIFY ALL CONDITIONS AND SHALL REPORT TO THE ARCHITECT ANY UNKNOWN CONDITIONS, ERRORS OR CONFLICTS IN THE DRAWINGS BEFORE BEGINNING WORK.
- DO NOT SCALE DRAWINGS.

KEYED NOTES

1 COLUMN WRAP TYPE A. SEE C3/AE520
2 COLUMN WRAP TYPE B. SEE B4/AE520
3 COLUMN WRAP TYPE D. SEE A4/AE520
4 COLUMN WRAP TYPE C. SEE B5/AE520
5 COLUMN WRAP TYPE E. SEE A5/AE520

KEY PLAN

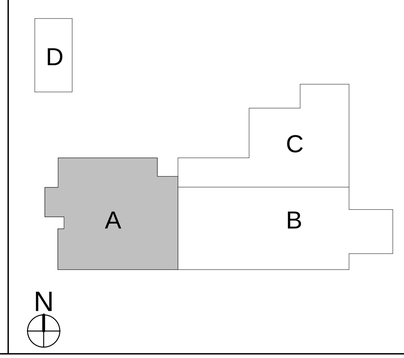

CRSA
649 E. South Temple
Salt Lake City, UT 84102
801.355.5915

MWL
11798 N. Lakeridge Pkwy.
Ashland, VA 23005
804-228-7473

State of Utah
Department of Administrative Services
Division of Facilities Construction & Management
4110 State Office Building
Salt Lake City, Utah 84114
Phone: (801) 538 - 3018
Fax: (801) 538 - 3267

DFCM APPROVAL STAMP

STATE OF UTAH #134096 MEHRDAD SAMIE LICENSED ARCHITECT
04-28-2014
ARCHITECT-ENGINEER STAMP

Unified State Laboratory Module 2

4451 South 2700 West, Taylorsville, UT 84118

DFCM #:	13020300
Project #:	B13-024

DATE:	ISSUE TYPE:
APRIL 21, 2014	BID SET
MAY 8, 2015	ADD # 1

CHECKED BY	J. NIELSEN
DRAWN BY	F. PITORE

LEVEL 1 DIMENSION PLAN AREA A

AE101A.D

VOLUME 1

C:\Users\fernando\Documents_A_13024_Modli_2013_fernando.rvt
5/8/2015 1:18:16 PM

KEYED NOTES

1. MOP SINK. SEE PLUMBING DRAWINGS.
2. MOP RACK. SEE ACCESSORY SCHEDULE.
3. FLOOR DRAIN. SLOPE FLOOR TO DRAIN AS SHOWN. SEE PLUMBING DRAWINGS.
4. TRENCH DRAIN. SEE PLUMBING DRAWINGS.
5. FURR WALL WITH WALL TYPE H. SEE FINISH PLANS FOR FINISH.
6. BOLLARD. SEE DETAIL 16/C401.
7. SCRUB SINK. SEE PLUMBING DRAWINGS.
8. WINDOW SILL. SEE FINISH LEGEND.
9. STEEL COLUMN. SEE STRUCTURAL. PAINT WHERE EXPOSED.
10. BRACE FRAME. PAINT WHERE EXPOSED. SEE STRUCTURAL.
11. COLUMN WRAP. SIMILAR TO DETAIL A5/AE520
12. ELECTRICAL PANEL. SEE ELECTRICAL DRAWINGS.
13. FURR WALL WITH 1-1/2" METAL FRAMING.
14. WHITEBOARD. SEE ACCESSORY SCHEDULE.

GENERAL NOTES

- GENERAL CONTRACTOR SHALL FIELD VERIFY ALL CONDITIONS AND SHALL REPORT TO THE ARCHITECT ANY UNKNOWN CONDITIONS, ERRORS OR CONFLICTS IN THE DRAWINGS BEFORE BEGINNING WORK.
- DO NOT SCALE DRAWINGS.
- ITEMS SHOWN BY HIDDEN LINE ARE SPECIFIED BY OTHER SECTIONS.

ALL WALLS TO BE TYPE "A" U.N.O. ON PLAN — A

FIRE EXTINGUISHER — FE

KEY PLAN

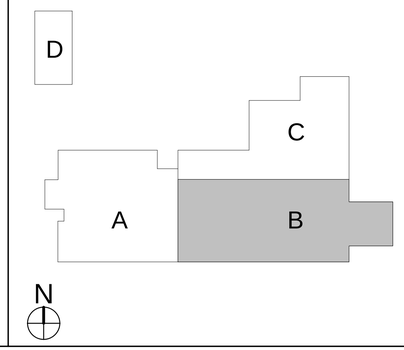

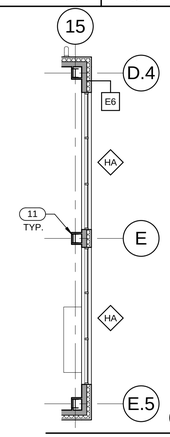

CLERESTORY PLAN 1/8" = 1'-0" C5 AE101B

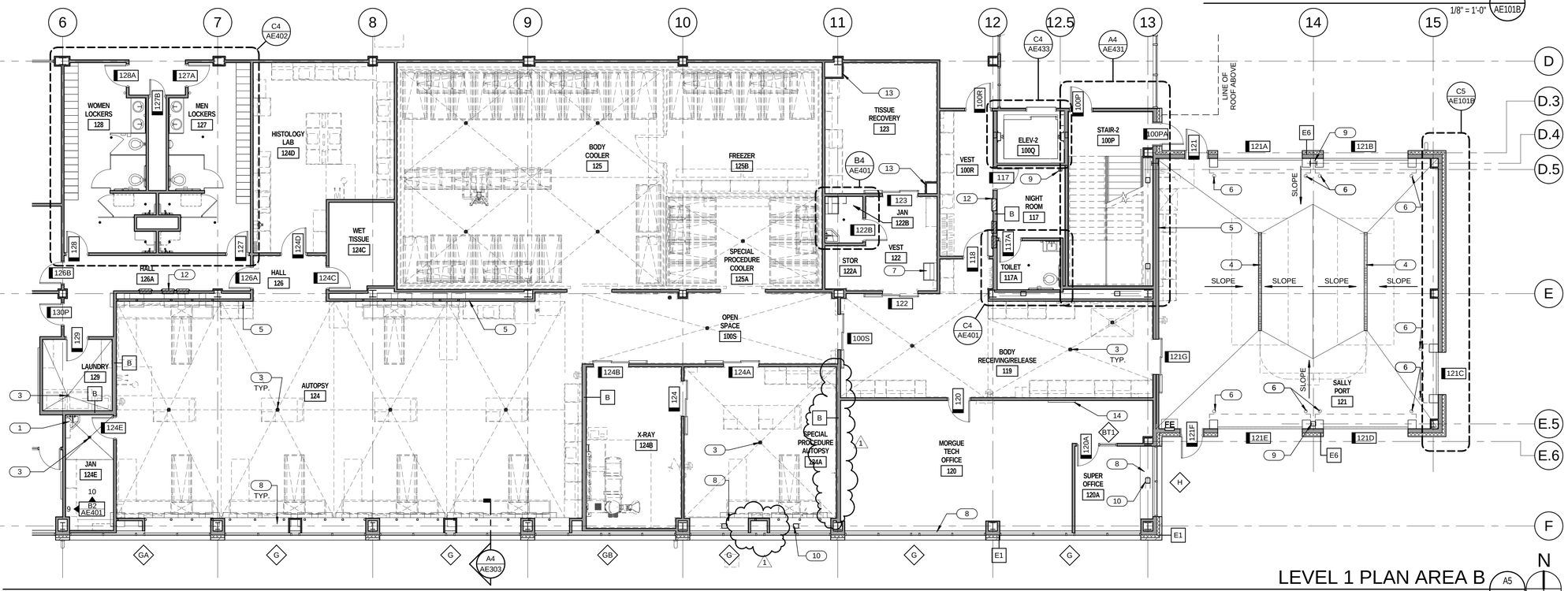

LEVEL 1 PLAN AREA B 1/8" = 1'-0" A5 AE101B

CRSA
649 E. South Temple
Salt Lake City, UT 84102
801.355.5915

MWL
11798 N. Lakeridge Pkwy.
Ashland, VA 23005
804-228-7473

State of Utah
Department of Administrative Services
Division of Facilities Construction & Management
DFCM
4110 State Office Building
Salt Lake City, Utah 84114
Phone: (801) 538 - 3018
Fax: (801) 538 - 3267

DFCM APPROVAL STAMP

STATE OF UTAH #134096 MEHRDAD SAMII LICENSED ARCHITECT
04.28.2014
ARCHITECT-ENGINEER STAMP

Unified State Laboratory Module 2

4451 South 2700 West, Taylorsville, UT 84118

DFCM #:	13020300
Project #:	B13-024
DATE:	ISSUE TYPE:
APRIL 21, 2014	BID SET
MAY 8, 2015	ADD # 1
CHECKED BY	J. NIELSEN
DRAWN BY	F. PITORE

LEVEL 1 PLAN AREA B

AE101B

VOLUME 1

C:\Users\fernando\Documents_A_13024_Modit_2013_fernando.rvt
5/8/2015 1:18:26 PM

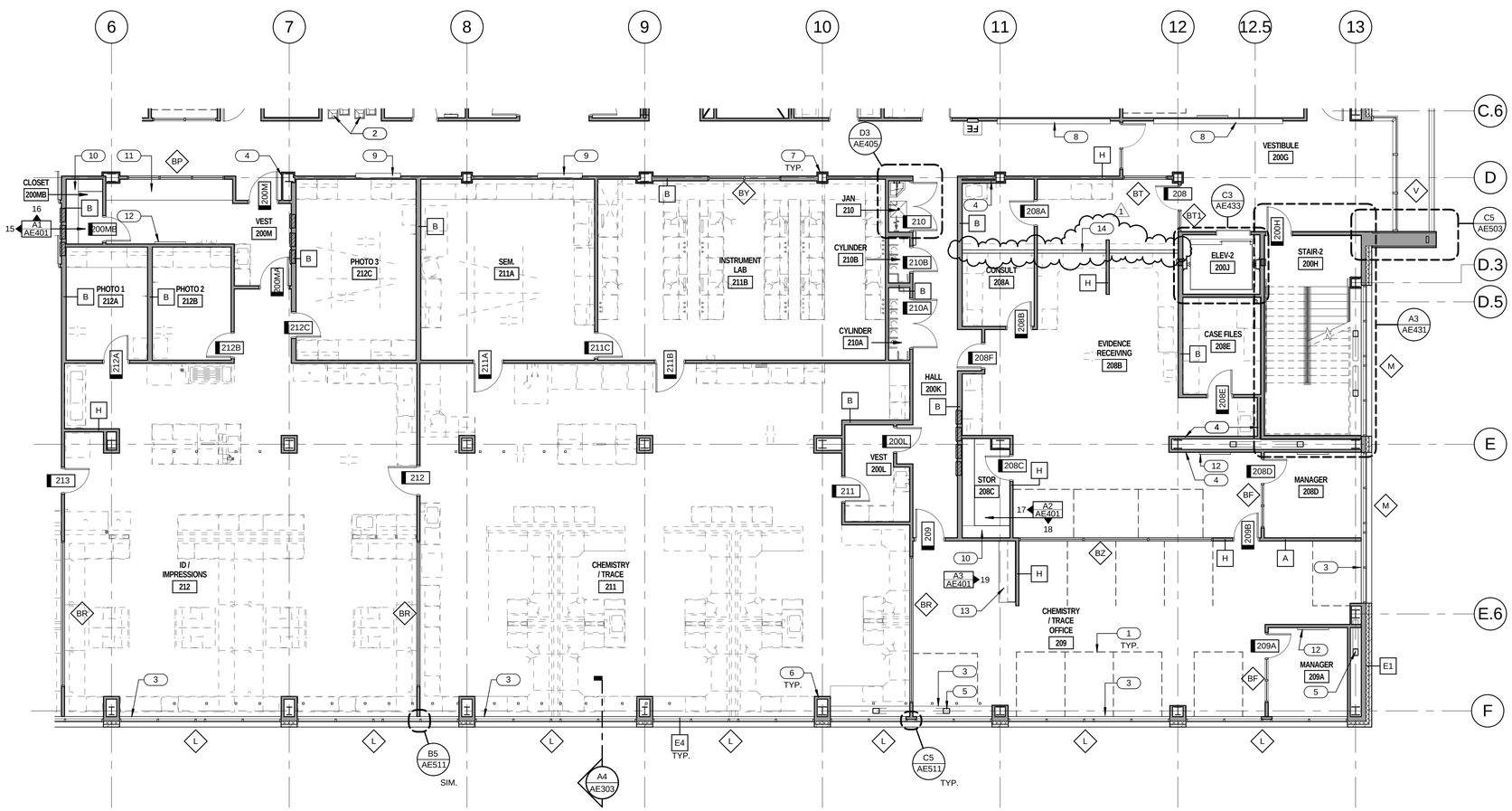

LEVEL 2 PLAN AREA B

1/8" = 1'-0"

GENERAL NOTES

- GENERAL CONTRACTOR SHALL FIELD VERIFY ALL CONDITIONS AND SHALL REPORT TO THE ARCHITECT ANY UNKNOWN CONDITIONS, ERRORS OR CONFLICTS IN THE DRAWINGS BEFORE BEGINNING WORK.
- DO NOT SCALE DRAWINGS.
- ITEMS SHOWN BY HIDDEN LINE ARE SPECIFIED BY OTHER SECTIONS.

ALL WALLS TO BE TYPE "A" U.N.O. ON PLAN — A

FIRE EXTINGUISHER — FE

KEYED NOTES

1 SPACE FOR CUBICLE.
2 DRINKING FOUNTAIN. SEE PLUMBING DRAWINGS.
3 WINDOW SILL. SEE FINISH LEGEND.
4 FURR WALL WITH WALL TYPE H. SEE FINISH PLANS FOR FINISH.
5 BRACE FRAME. PAINT WHERE EXPOSED. SEE STRUCTURAL.
6 COLUMN WRAP TYPE D. SEE A4/AE520
7 COLUMN WRAP TYPE E. SEE A5/AE520
8 DISPLAY CABINET. SEE A3/AE540
9 AV CABINET. SEE A2/AE541
10 ADJUSTABLE SHELVING. SEE A3/AE540.
11 COUNTERTOP WITH INTEGRAL 4" HIGH BACKSPLASH. SEE CASEWORK DETAILS.
12 WHITEBOARD. SEE ACCESSORY SCHEDULE.
13 COUNTERTOP. SEE INTERIOR ELEVATIONS.
14 BUILD WALL TYPE "A" UP TO UNDERNEATH COUNTERTOP.

KEY PLAN

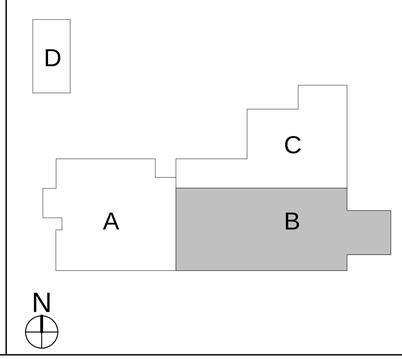

CRSA
649 E. South Temple
Salt Lake City, UT 84102
801.355.5915

MWL
11798 N. Lakeridge Pkwy.
Ashland, VA 23005
804-228-7473

State of Utah
Department of Administrative Services
Division of Facilities Construction & Management
4110 State Office Building
Salt Lake City, Utah 84114
Phone: (801) 538 - 3018
Fax: (801) 538 - 3267

DFCM APPROVAL STAMP

STATE OF UTAH #134096 MEHRDAD SAMIE LICENSED ARCHITECT
04-28-2014
ARCHITECT-ENGINEER STAMP

Unified State Laboratory Module 2

4451 South 2700 West, Taylorsville, UT 84118

DFCM #: 13020300

Project #: B13-024

DATE:	ISSUE TYPE:
APRIL 21, 2014	BID SET
MAY 8, 2015	ADD # 1

CHECKED BY	J. NIELSEN
DRAWN BY	F. PITORE

LEVEL 2 PLAN AREA B

AE102B

VOLUME 1

C:\Users\fernando\Documents_A_13024_Modil_2013_fernando.rvt
5/8/2015 1:18:43 PM

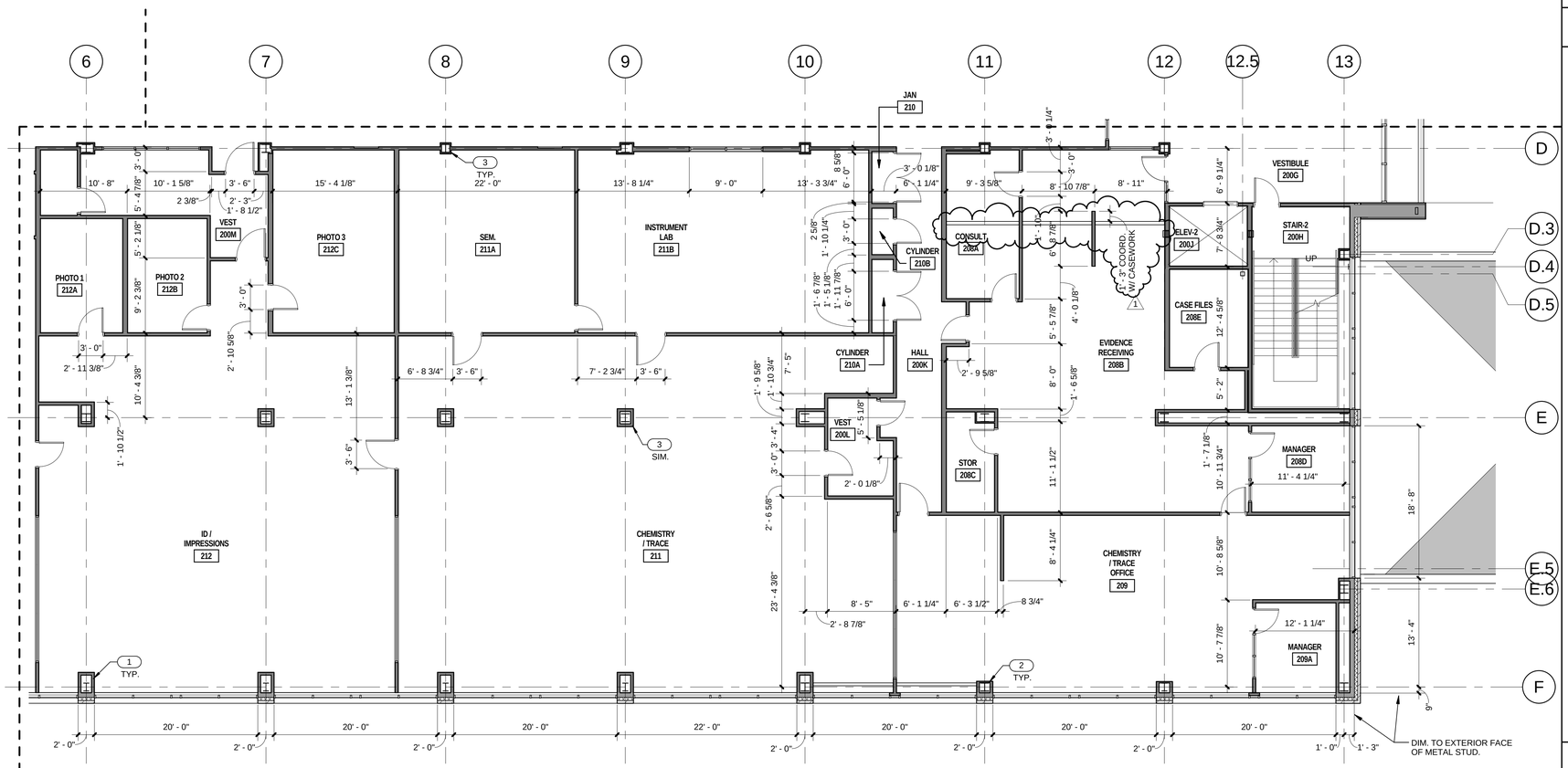

LEVEL 2 DIMENSION PLAN AREA B

1/8" = 1'-0" A4 AE102B.D

N

GENERAL NOTES

- GENERAL CONTRACTOR SHALL FIELD VERIFY ALL CONDITIONS AND SHALL REPORT TO THE ARCHITECT ANY UNKNOWN CONDITIONS, ERRORS OR CONFLICTS IN THE DRAWINGS BEFORE BEGINNING WORK.
- DO NOT SCALE DRAWINGS.

KEYED NOTES

1 COLUMN WRAP TYPE D. SEE A4/AE520
2 COLUMN WRAP TYPE C. SEE B5/AE520
3 COLUMN WRAP TYPE E. SEE A5/AE520

KEY PLAN

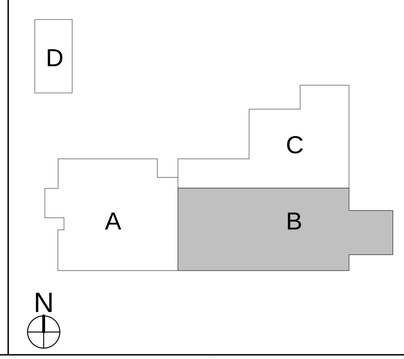

CRSA
649 E. South Temple
Salt Lake City, UT 84102
801.355.5915

MWL
11798 N. Lakeridge Pkwy.
Ashland, VA 23005
804-228-7473

State of Utah
Department of Administrative Services
Division of Facilities Construction & Management
DFCM
4110 State Office Building
Salt Lake City, Utah 84114
Phone: (801) 538 - 3018
Fax: (801) 538 - 3267

DFCM APPROVAL STAMP

STATE OF UTAH #134096 MEHRDAD SAMII LICENSED ARCHITECT
04-28-2014
ARCHITECT-ENGINEER STAMP

Unified State Laboratory Module 2

4451 South 2700 West, Taylorsville, UT 84118

DFCM #: 13020300
Project #: B13-024

DATE:	ISSUE TYPE:
APRIL 21, 2014	BID SET
MAY 8, 2015	ADD # 1

CHECKED BY: J. NIELSEN
DRAWN BY: F. PITORE

LEVEL 2 DIMENSION PLAN AREA B

AE102B.D

VOLUME 1

C:\Users\fernando\Documents_A_13024_Model_2013_fernando.rvt
5/8/2015 1:18:47 PM

LEVEL 3 PLAN AREA A

1/8" = 1'-0"

GENERAL NOTES

- GENERAL CONTRACTOR SHALL FIELD VERIFY ALL CONDITIONS AND SHALL REPORT TO THE ARCHITECT ANY UNKNOWN CONDITIONS, ERRORS OR CONFLICTS IN THE DRAWINGS BEFORE BEGINNING WORK.
- DO NOT SCALE DRAWINGS.
- ITEMS SHOWN BY HIDDEN LINE ARE SPECIFIED BY OTHER SECTIONS.

ALL WALLS TO BE TYPE "A" U.N.O. ON PLAN — A

FIRE EXTINGUISHER — FE

KEYED NOTES

1 DRINKING FOUNTAIN. SEE PLUMBING DRAWINGS.
2 GUARDRAIL. SEE A3/AE508 AND A2/AE508.
3 ELECTRICAL PANEL. SEE ELECTRICAL DRAWINGS.
4 FURR WALL WITH WALL TYPE H. SEE FINISH PLANS FOR FINISH.
5 PAVERS. SEE SHEET AE/121.
6 BRACE FRAME. PAINT WHERE EXPOSED. SEE STRUCTURAL.
7 WINDOW SILL. SEE FINISH LEGEND.
8 WINDOW SIIL. SEE A3/AE405.
9 COUNTERTOP. SEE INTERIOR ELEVATIONS.
10 FURR WITH 1-1/2" METAL FRAMING. PROVIDE DETAIL SIMILAR TO COLUMN WRAP TYPE B. COORDINATE WITH MECHANICAL.
11 STEEL GRATE. COORDINATE WITH MECHANICAL PIPING. SEE MECHANICAL DRAWINGS.
12 WHITEBOARD. SEE ACCESSORY SCHEDULE.

KEY PLAN

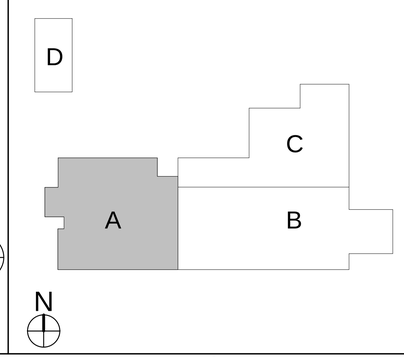

CRSA
649 E. South Temple
Salt Lake City, UT 84102
801.355.5915

MWL
11798 N. Lakeridge Pkwy.
Ashland, VA 23005
804-228-7473

State of Utah
Department of Administrative Services
Division of Facilities Construction & Management
DFCM
4110 State Office Building
Salt Lake City, Utah 84114
Phone: (801) 538 - 3018
Fax: (801) 538 - 3267

DFCM APPROVAL STAMP

STATE OF UTAH #134096 MEHRDAD SAMII LICENSED ARCHITECT

04-28-2014

ARCHITECT-ENGINEER STAMP

Unified State Laboratory Module 2

4451 South 2700 West, Taylorsville, UT 84118

DFCM #: 13020300

Project #: B13-024

DATE:	ISSUE TYPE:
APRIL 21, 2014	BID SET
MAY 8, 2015	ADD # 1

CHECKED BY	J. NIELSEN
DRAWN BY	F. PITORE

LEVEL 3 PLAN AREA A

AE103A

VOLUME 1

C:\Users\fernando\Documents_A_13024_Model_2013_fernando.rvt
5/8/2015 1:18:53 PM

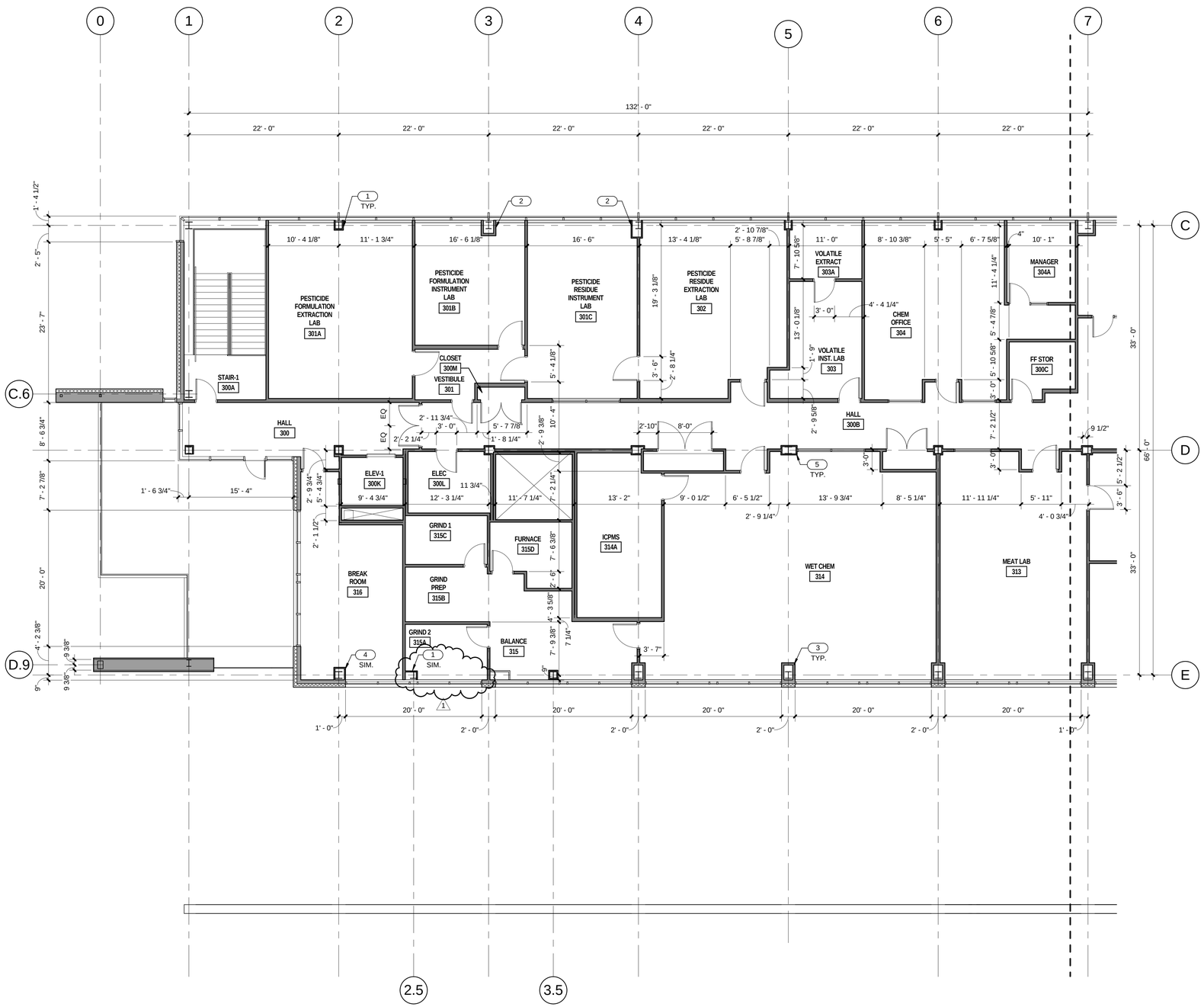

LEVEL 3 DIMENSION PLAN AREA A

1/8" = 1'-0" A4 AE103A.D

N

GENERAL NOTES

- GENERAL CONTRACTOR SHALL FIELD VERIFY ALL CONDITIONS AND SHALL REPORT TO THE ARCHITECT ANY UNKNOWN CONDITIONS, ERRORS OR CONFLICTS IN THE DRAWINGS BEFORE BEGINNING WORK.
- DO NOT SCALE DRAWINGS.

KEYED NOTES

1 COLUMN WRAP TYPE A. SEE C3/AE520
2 COLUMN WRAP TYPE B. SEE B4/AE520
3 COLUMN WRAP TYPE D. SEE A4/AE520
4 COLUMN WRAP TYPE C. SEE B5/AE520
5 COLUMN WRAP TYPE E. SEE A5/AE520

KEY PLAN

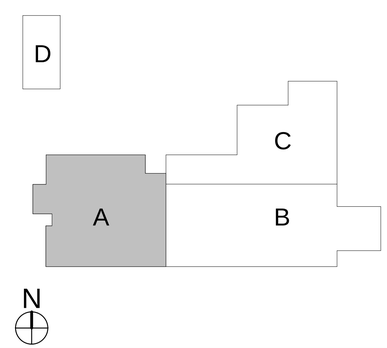

CRSA
649 E. South Temple
Salt Lake City, UT 84102
801.355.5915

MWL
11798 N. Lakeridge Pkwy.
Ashland, VA 23005
804-228-7473

State of Utah
Department of Administrative Services
Division of Facilities Construction & Management
4110 State Office Building
Salt Lake City, Utah 84114
Phone: (801) 538 - 3018
Fax: (801) 538 - 3267

DFCM APPROVAL STAMP

STATE OF UTAH #134096 MEHRDAD SAMIE LICENSED ARCHITECT
04-28-2014
ARCHITECT-ENGINEER STAMP

Unified State Laboratory Module 2

4451 South 2700 West, Taylorsville, UT 84118

DFCM #: 13020300

Project #: B13-024

DATE:	ISSUE TYPE:
APRIL 21, 2014	BID SET
MAY 8, 2015	ADD # 1

CHECKED BY	J. NIELSEN
DRAWN BY	F. PITORE

LEVEL 3 DIMENSION PLAN AREA A

AE103A.D

VOLUME 1

C:\Users\fernando\Documents_A_13024_Modil_2013_fernando.rvt
5/8/2015 1:18:57 PM

KEYED NOTES

1. 6"X6" CONCRETE CURB
2. 6" CONCRETE HOUSEKEEPING PAD. COORDINATE SIZE & PLACEMENT WITH MECHANICAL EQUIPMENT. SEE FINISH SCHEDULE.
3. MECHANICAL EQUIPMENT. SEE MECHANICAL DRAWINGS.
4. MECHANICAL LOUVER. SEE MECHANICAL DRAWINGS.
5. BRACE FRAME. PAINT WHERE EXPOSED. SEE STRUCTURAL.
6. FLOOR DRAIN. SLOPE FLOOR TO DRAIN AS SHOWN. SEE PLUMBING DRAWINGS.
7. FLOOR SINK. SEE PLUMBING DRAWINGS.
8. AIR HANDLER. SEE MECHANICAL DRAWINGS.

GENERAL NOTES

- GENERAL CONTRACTOR SHALL FIELD VERIFY ALL CONDITIONS AND SHALL REPORT TO THE ARCHITECT ANY UNKNOWN CONDITIONS, ERRORS OR CONFLICTS IN THE DRAWINGS BEFORE BEGINNING WORK.
- DO NOT SCALE DRAWINGS.
- ITEMS SHOWN BY HIDDEN LINE ARE SPECIFIED BY OTHER SECTIONS.

ALL WALLS TO BE TYPE "A" U.N.O. ON PLAN — A

FIRE EXTINGUISHER — FE

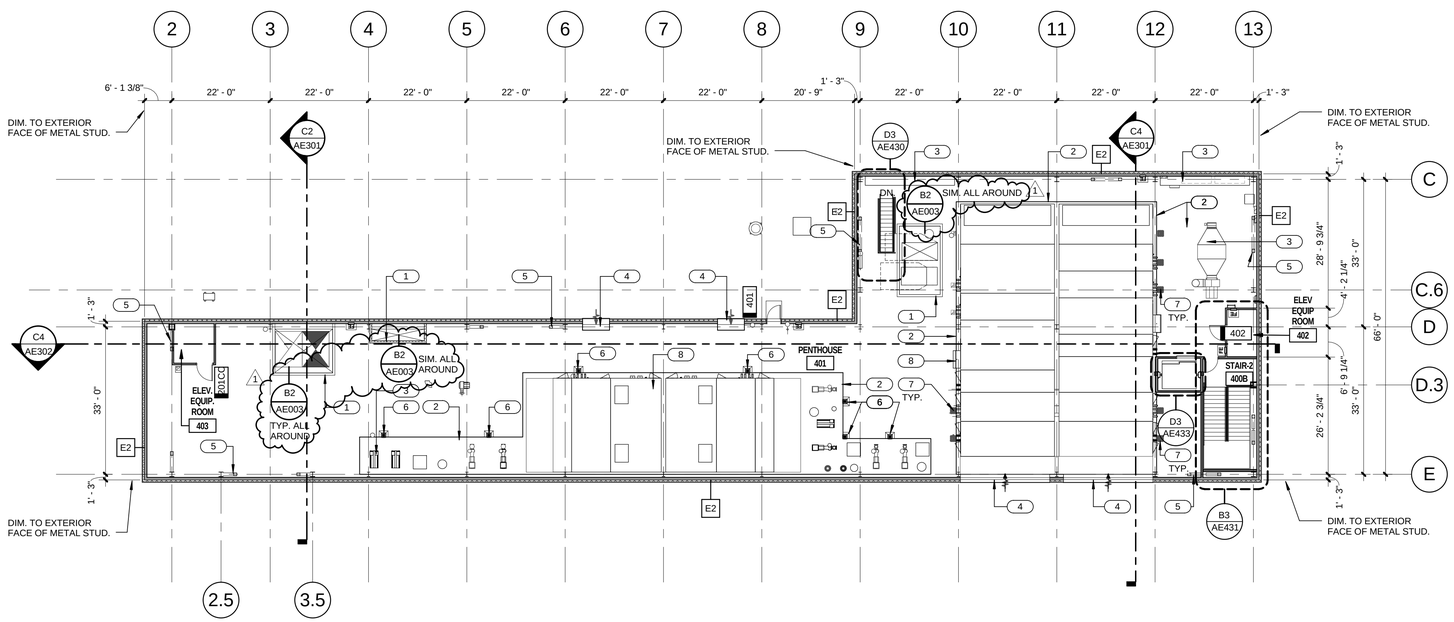

PENTHOUSE LEVEL FLOOR PLAN (A5 / AE104)

1/16" = 1'-0"

N

CRSA

649 E. South Temple
Salt Lake City, UT 84102
801.355.5915

MWL

11798 N. Lakeridge Pkwy.
Ashland, VA 23005
804-228-7473

State of Utah
Department of Administrative Services

DFCM
Division of Facilities Construction & Management
4110 State Office Building
Salt Lake City, Utah 84114
Phone: (801) 538 - 3018
Fax: (801) 538 - 3267

DFCM APPROVAL STAMP

STATE OF UTAH #134096 MEHRDAD SAMII LICENSED ARCHITECT
04.28.2014
ARCHITECT-ENGINEER STAMP

Unified State Laboratory Module 2

4451 South 2700 West, Taylorsville, UT 84118

DFCM #:	13020300
Project #:	B13-024
DATE:	ISSUE TYPE:
APRIL 21, 2014	BID SET
MAY 8, 2015	ADD # 1
CHECKED BY	J. NIELSEN
DRAWN BY	F. PITORE

PENTHOUSE LEVEL FLOOR PLAN

AE104

VOLUME 1

C:\Users\fernando\Documents_A_13024_Modll_2013_fernando.rvt
5/8/2015 1:19:04 PM

KEYED NOTES

1. EXPOSED STRUCTURE.
2. SUNSHADE.
3. ROLLER WINDOW SHADES TYP. ALL EXTERIOR WINDOWS. REFER TO ACCESSORY SCHEDULE. SEE SPECS.

GENERAL NOTES

- GENERAL CONTRACTOR SHALL FIELD VERIFY ALL CONDITIONS AND SHALL REPORT TO THE ARCHITECT ANY UNKNOWN CONDITIONS, ERRORS OR CONFLICTS IN THE DRAWINGS BEFORE BEGINNING WORK.
- DO NOT SCALE DRAWINGS.

METAL SOFFIT PANEL

ACOUSTICAL CEILING TILE 24" X 24"

GYPSUM BOARD. PAINT.

1HR FIRE RATED BOTTOM OF SHAFT AT 10'-0" A.F.F. U.N.O. PER DETAIL C5 / AE530

RADIANT CEILING PANEL @ 10'-0" A.F.F. U.N.O.

SUSPENDED LIGHT FIXTURE

SUPPLY OR RETURN GRILLE. SEE MECHANICAL

LAY-IN MOUNTED LIGHT FIXUTRE. SEE ELECTRICAL

RECESSED LIGHT FIXTURE. SEE ELECTRICAL.

SURFACE MOUNTED LIGHT FIXTURE. SEE ELECTRICAL.

PROJECTOR SCREEN

SPEAKER

SMOKE DETECTOR

HORN STROBE

CEILING MOUNTED FAN COIL

PROJECTOR

MOTION SENSOR

CAMERA

CEILING ACCESS PANEL

STROBE

DROPCORD

FUME HOOD

UMBILICAL SERVICE CHASE

PHOTOCELL

KEY PLAN

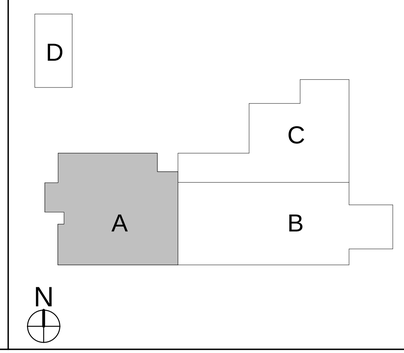

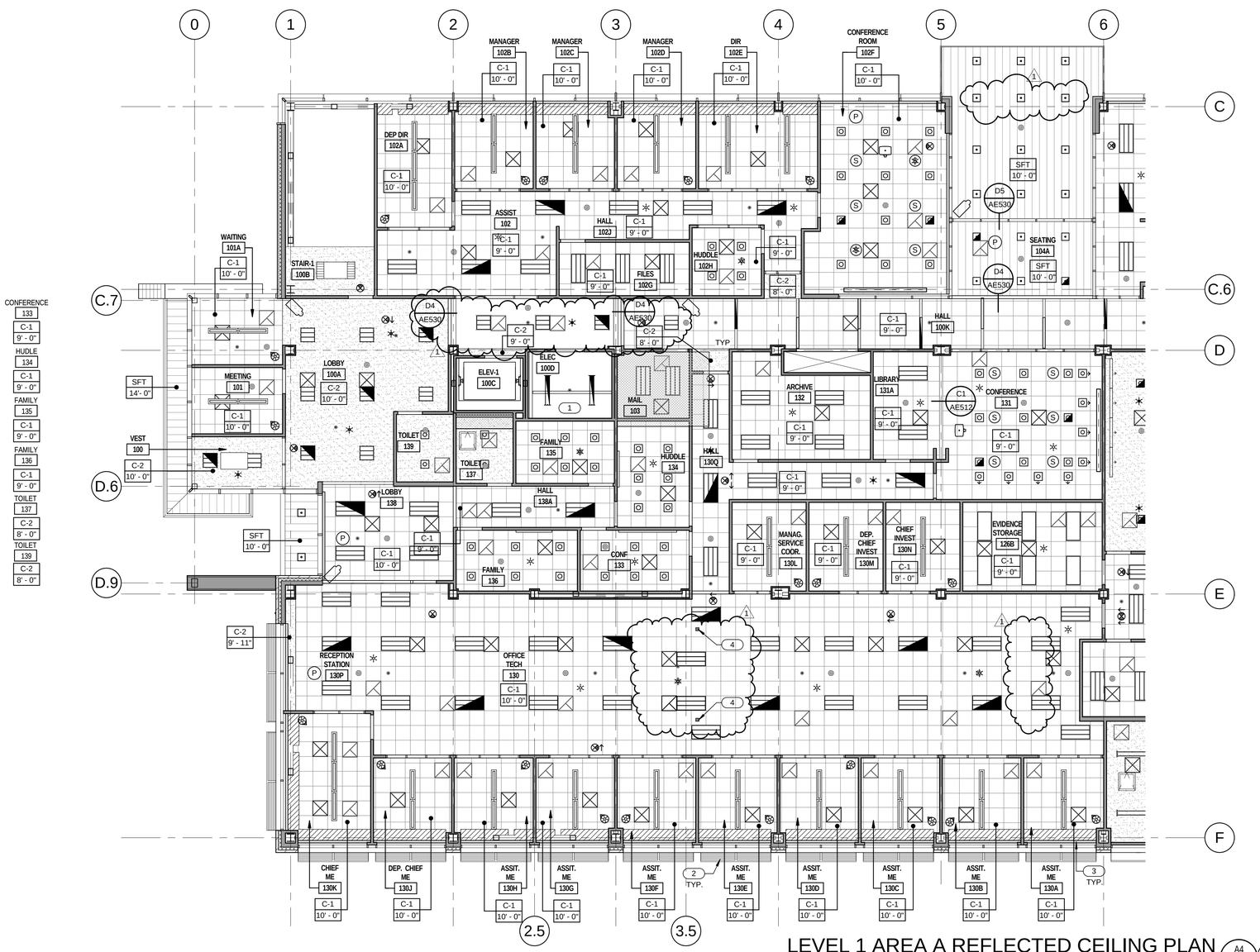

LEVEL 1 AREA A REFLECTED CEILING PLAN

1/8" = 1'-0"

A4 / AE109A

N

CRSA

649 E. South Temple
Salt Lake City, UT 84102
801.355.5915

MWL

11798 N. Lakeridge Pkwy.
Ashland, VA 23005
804-228-7473

State of Utah
Department of Administrative Services

DFCM
Division of Facilities Construction & Management
4110 State Office Building
Salt Lake City, Utah 84114
Phone: (801) 538 - 3018
Fax: (801) 538 - 3267

DFCM APPROVAL STAMP

STATE OF UTAH #134096 MEHRDAD SAMIE LICENSED ARCHITECT

04.28.2014

ARCHITECT-ENGINEER STAMP

Unified State Laboratory Module 2

4451 South 2700 West, Taylorsville, UT 84118

DFCM #:	13020300
Project #:	B13-024

DATE:	ISSUE TYPE:
APRIL 21, 2014	BID SET
MAY 8, 2015	ADD # 1

CHECKED BY	J. NIELSEN
DRAWN BY	F. PITORE

LEVEL 1 AREA A REFLECTED CEILING PLAN

AE109A

VOLUME 1

C:\Users\fernando\Documents_A_13024_Modil_2013_fernando.rvt
5/8/2015 2:20:28 PM

KEYED NOTES

1. HOIST RAIL.
2. EXPOSED STRUCTURE. PAINT.
3. ALUM. STOREFRONT SYSTEM. SEE WINDOW TYPES.
4. SUNSHADE.
5. EXPOSED STRUCTURE.

GENERAL NOTES

- GENERAL CONTRACTOR SHALL FIELD VERIFY ALL CONDITIONS AND SHALL REPORT TO THE ARCHITECT ANY UNKNOWN CONDITIONS, ERRORS OR CONFLICTS IN THE DRAWINGS BEFORE BEGINNING WORK.
- DO NOT SCALE DRAWINGS.

METAL SOFFIT PANEL

ACOUSTICAL CEILING TILE 24" X 24"

GYPSUM BOARD. PAINT.

1HR FIRE RATED BOTTOM OF SHAFT AT 10'-0" A.F.F. U.N.O. PER DETAIL C5 / AE530

RADIANT CEILING PANEL @ 10'- 0" A.F.F U.N.O.

SUSPENDED LIGHT FIXTURE

SUPPLY OR RETURN GRILLE. SEE MECHANICAL

LAY-IN MOUNTED LIGHT FIXUTRE. SEE ELECTRICAL

RECESSED LIGHT FIXTURE. SEE ELECTRICAL.

SURFACE MOUNTED LIGHT FIXTURE. SEE ELECTRICAL.

PROJECTOR SCREEN

SPEAKER

SMOKE DETECTOR

HORN STROBE

CEILING MOUNTED FAN COIL

PROJECTOR

MOTION SENSOR

CAMERA

CEILING ACCESS PANEL

STROBE

DROPCORD

FUME HOOD

UMBILICAL SERVICE CHASE

PHOTOCELL

KEY PLAN

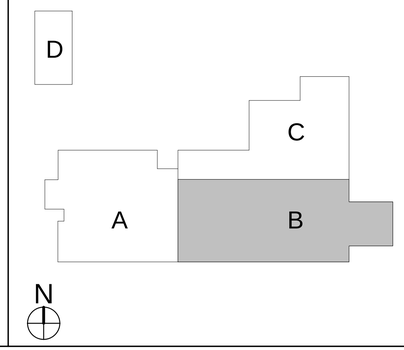

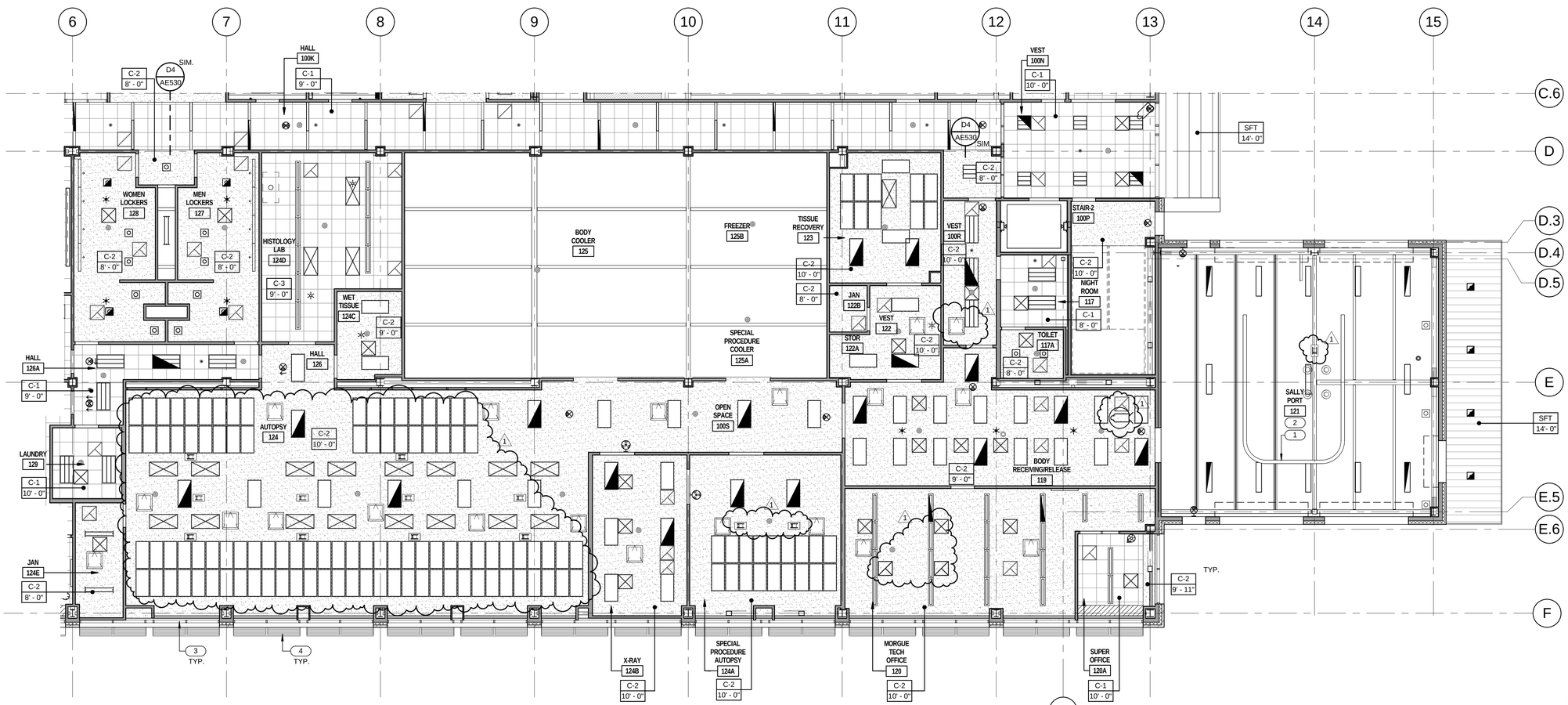

LEVEL 1 AREA B REFLECTED CEILING PLAN

A5 AE109B

1/8" = 1'-0"

CRSA

649 E. South Temple
Salt Lake City, UT 84102
801.355.5915

MWL

11798 N. Lakeridge Pkwy.
Ashland, VA 23005
804-228-7473

State of Utah
Department of Administrative Services

DFCM
Division of Facilities Construction & Management
4110 State Office Building
Salt Lake City, Utah 84114
Phone: (801) 538 - 3018
Fax: (801) 538 - 3267

DFCM APPROVAL STAMP

STATE OF UTAH #174098 MEHRDAD SAMII LICENSED ARCHITECT

04.28.2014

ARCHITECT-ENGINEER STAMP

Unified State Laboratory Module 2

4451 South 2700 West, Taylorsville, UT 84118

DFCM #:	13020300
Project #:	B13-024

DATE:	ISSUE TYPE:
APRIL 21, 2014	BID SET
MAY 8, 2015	ADD # 1

CHECKED BY	J. NIELSEN
DRAWN BY	F. PITORE

LEVEL 1 AREA B REFLECTED CEILING PLAN

AE109B

VOLUME 1

C:\Users\fernando\Documents_A_13024_Modl_2013_fernando.rvt
5/8/2015 2:20:35 PM

KEYED NOTES

1 EXPOSED STRUCTURE. PAINT.
2 EXPOSED STRUCTURE.
3 OVERHEAD ROLLING DOOR. SEE DOOR SCHEDULE.

GENERAL NOTES

- GENERAL CONTRACTOR SHALL FIELD VERIFY ALL CONDITIONS AND SHALL REPORT TO THE ARCHITECT ANY UNKNOWN CONDITIONS, ERRORS OR CONFLICTS IN THE DRAWINGS BEFORE BEGINNING WORK.
- DO NOT SCALE DRAWINGS.

METAL SOFFIT PANEL

ACOUSTICAL CEILING TILE 24" X 24"

GYPSUM BOARD. PAINT.

1HR FIRE RATED BOTTOM OF SHAFT AT 10'-0" A.F.F. U.N.O. PER DETAIL C5 / AE530

RADIANT CEILING PANEL @ 10'- 0" A.F.F U.N.O.

SUSPENDED LIGHT FIXTURE

SUPPLY OR RETURN GRILLE. SEE MECHANICAL

LAY-IN MOUNTED LIGHT FIXUTRE. SEE ELECTRICAL

RECESSED LIGHT FIXTURE. SEE ELECTRICAL.

SURFACE MOUNTED LIGHT FIXTURE. SEE ELECTRICAL.

PROJECTOR SCREEN

SPEAKER

SMOKE DETECTOR

HORN STROBE

CEILING MOUNTED FAN COIL

PROJECTOR

MOTION SENSOR

CAMERA

CEILING ACCESS PANEL

STROBE

DROPCORD

FUME HOOD

UMBILICAL SERVICE CHASE

PHOTOCELL

KEY PLAN

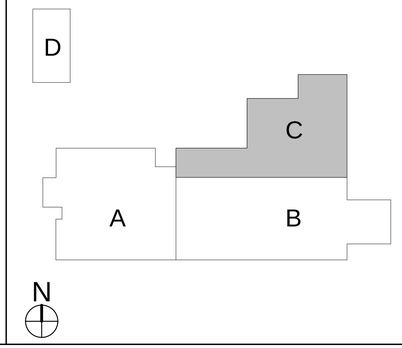

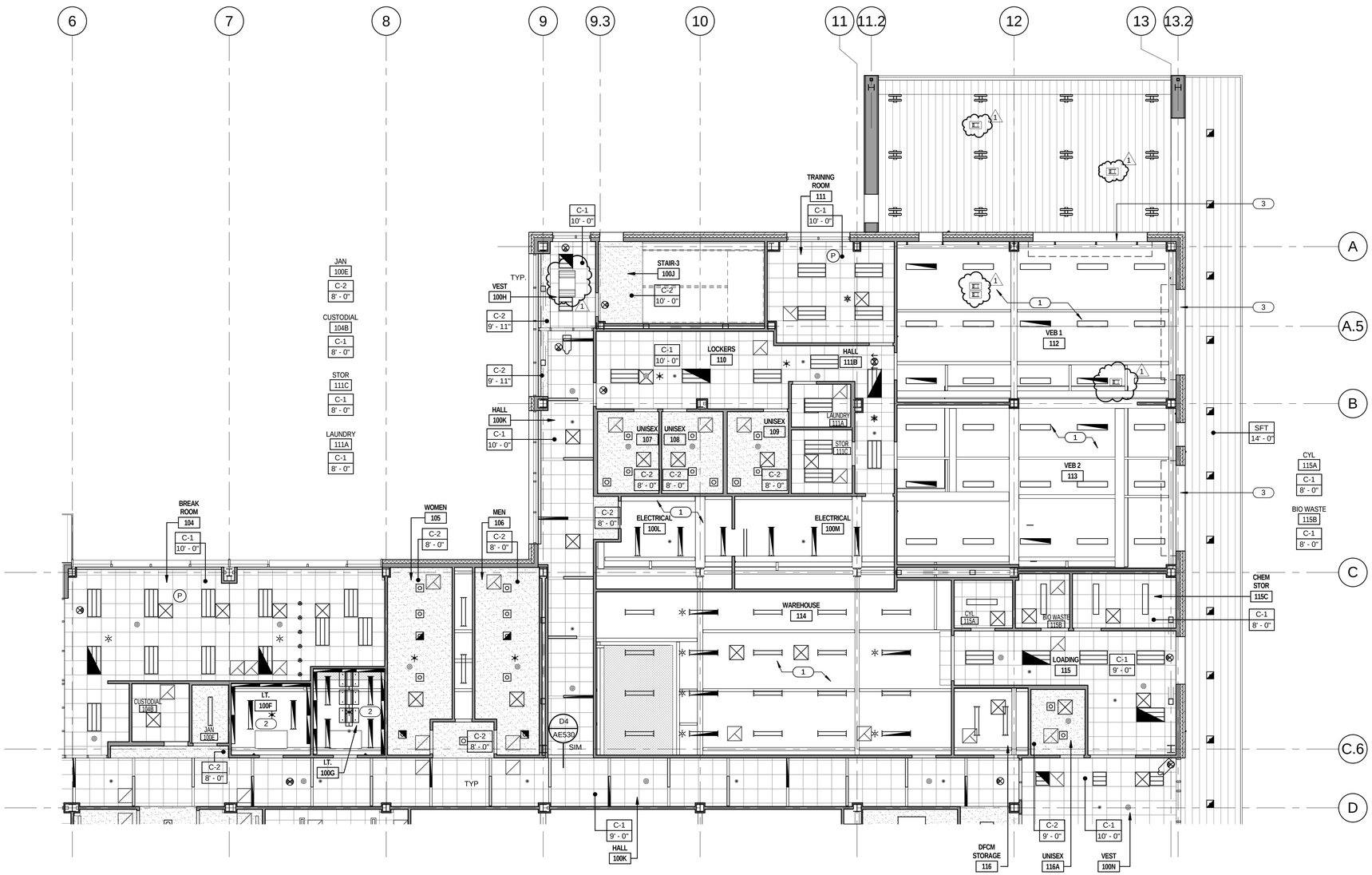

LEVEL 1 AREA C REFLECTED CEILING PLAN

1/8" = 1'-0"

A5 / AE109C

CRSA
649 E. South Temple
Salt Lake City, UT 84102
801.355.5915

MWL
11798 N. Lakeridge Pkwy.
Ashland, VA 23005
804-228-7473

State of Utah
Department of Administrative Services
Division of Facilities Construction & Management
DFCM
4110 State Office Building
Salt Lake City, Utah 84114
Phone: (801) 538 - 3018
Fax: (801) 538 - 3267

DFCM APPROVAL STAMP

STATE OF UTAH #134096 MEHRDAD SAMIE LICENSED ARCHITECT
04.28.2014
ARCHITECT-ENGINEER STAMP

Unified State Laboratory Module 2

4451 South 2700 West, Taylorsville, UT 84118

DFCM #: 13020300

Project #: B13-024

DATE:	ISSUE TYPE:
APRIL 21, 2014	BID SET
MAY 8, 2015	ADD # 1

CHECKED BY	J. NIELSEN
DRAWN BY	F. PITORE

LEVEL 1 AREA C REFLECTED CEILING PLAN

AE109C

VOLUME 1

C:\Users\fernando\Documents_A_13024_Modll_2013_fernando.rvt
5/8/2015 2:20:43 PM

KEYED NOTES

1. EXPOSED STRUCTURE.
2. SUNSHADE.
3. LIGHT TRACK.

GENERAL NOTES

- METAL SOFFIT PANEL
- ACOUSTICAL CEILING TILE 24" X 24"
- GYPSUM BOARD. PAINT.
- 1HR FIRE RATED BOTTOM OF SHAFT AT 10'-0" A.F.F. U.N.O. PER DETAIL C5 / AE530
- RADIANT CEILING PANEL @ 10'- 0" A.F.F U.N.O.
- SUSPENDED LIGHT FIXTURE
- SUPPLY OR RETURN GRILLE. SEE MECHANICAL
- LAY-IN MOUNTED LIGHT FIXUTRE. SEE ELECTRICAL
- RECESSED LIGHT FIXTURE. SEE ELECTRICAL.
- SURFACE MOUNTED LIGHT FIXTURE. SEE ELECTRICAL.
- PROJECTOR SCREEN
- SPEAKER
- SMOKE DETECTOR
- HORN STROBE
- CEILING MOUNTED FAN COIL
- PROJECTOR
- MOTION SENSOR
- CAMERA
- CEILING ACCESS PANEL
- STROBE
- DROPCORD
- FUME HOOD
- UMBILICAL SERVICE CHASE
- PHOTOCELL

KEY PLAN

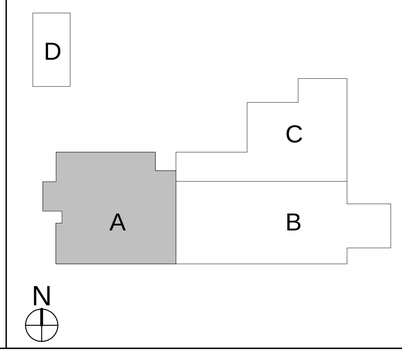

LEVEL 2 AREA A REFLECTED CEILING PLAN

1/8" = 1'-0"

A4 AE110A

N

CRSA
649 E. South Temple
Salt Lake City, UT 84102
801.355.5915

MWL
11798 N. Lakeridge Pkwy.
Ashland, VA 23005
804-228-7473

State of Utah
Department of Administrative Services
Division of Facilities Construction & Management
DFCM
4110 State Office Building
Salt Lake City, Utah 84114
Phone: (801) 538 - 3018
Fax: (801) 538 - 3267

DFCM APPROVAL STAMP

STATE OF UTAH #134096 MEHRDAD SAMIE LICENSED ARCHITECT
04.28.2014
ARCHITECT-ENGINEER STAMP

Unified State Laboratory Module 2

4451 South 2700 West, Taylorsville, UT 84118

DFCM #:	13020300
Project #:	B13-024

DATE:	ISSUE TYPE:
APRIL 21, 2014	BID SET
MAY 8, 2015	ADD # 1

CHECKED BY	J. NIELSEN
DRAWN BY	F. PITORE

LEVEL 2 AREA A REFLECTED CEILING PLAN

AE110A

VOLUME 1

C:\Users\fernando\Documents_A_13024_Mcdll_2013_fernando.rvt
5/8/2015 2:20:46 PM

KEYED NOTES

1. EXPOSED STRUCTURE. PAINT.
2. SUNSHADE.
3. ROLLER WINDOW SHADES TYP. ALL EXTERIOR WINDOWS. REFER TO ACCESSORY SCHEDULE & SPEC.
4. LIGHT TRACK.

GENERAL NOTES

- GENERAL CONTRACTOR SHALL FIELD VERIFY ALL CONDITIONS AND SHALL REPORT TO THE ARCHITECT ANY UNKNOWN CONDITIONS, ERRORS OR CONFLICTS IN THE DRAWINGS BEFORE BEGINNING WORK.
- DO NOT SCALE DRAWINGS.

METAL SOFFIT PANEL

ACOUSTICAL CEILING TILE 24" X 24"

GYPSUM BOARD. PAINT.

1HR FIRE RATED BOTTOM OF SHAFT AT 10'-0" A.F.F. U.N.O. PER DETAIL C5 / AE530

RADIANT CEILING PANEL @ 10'- 0" A.F.F U.N.O.

SUSPENDED LIGHT FIXTURE

SUPPLY OR RETURN GRILLE. SEE MECHANICAL

LAY-IN MOUNTED LIGHT FIXUTRE. SEE ELECTRICAL

RECESSED LIGHT FIXTURE. SEE ELECTRICAL.

SURFACE MOUNTED LIGHT FIXTURE. SEE ELECTRICAL.

PROJECTOR SCREEN

SPEAKER

SMOKE DETECTOR

HORN STROBE

CEILING MOUNTED FAN COIL

PROJECTOR

MOTION SENSOR

CAMERA

CEILING ACCESS PANEL

STROBE

DROPCORD

FUME HOOD

UMBILICAL SERVICE CHASE

PHOTOCELL

KEY PLAN

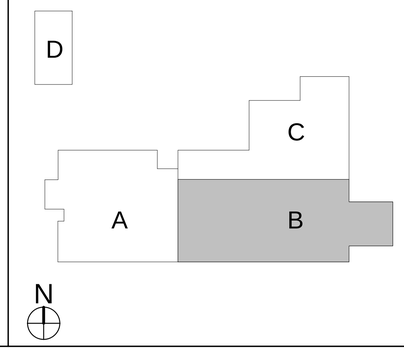

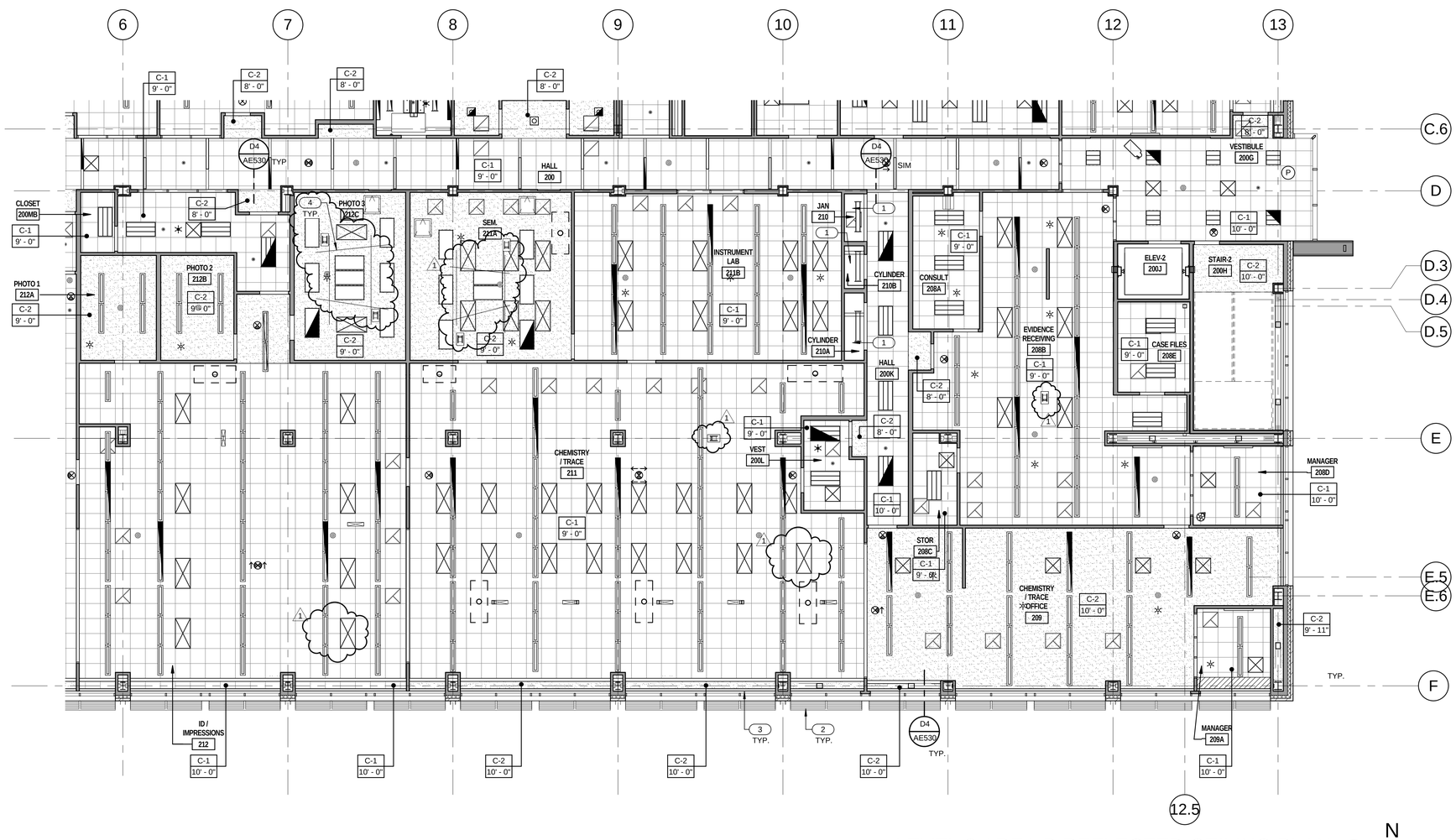

LEVEL 2 AREA B REFLECTED CEILING PLAN

1/8" = 1'-0" (A4 / AE110B)

CRSA
649 E. South Temple
Salt Lake City, UT 84102
801.355.5915

MWL
11798 N. Lakeridge Pkwy.
Ashland, VA 23005
804-228-7473

State of Utah
Department of Administrative Services
Division of Facilities Construction & Management
DFCM
4110 State Office Building
Salt Lake City, Utah 84114
Phone: (801) 538 - 3018
Fax: (801) 538 - 3267

DFCM APPROVAL STAMP

STATE OF UTAH #134098 MEHRDAD SAMIE LICENSED ARCHITECT
04.28.2014
ARCHITECT-ENGINEER STAMP

Unified State Laboratory Module 2

4451 South 2700 West, Taylorsville, UT 84118

DFCM #:	13020300
Project #:	B13-024

DATE:	ISSUE TYPE:
APRIL 21, 2014	BID SET
MAY 8, 2015	ADD # 1
CHECKED BY	J. NIELSEN
DRAWN BY	F. PITORE

LEVEL 2 AREA B REFLECTED CEILING PLAN

AE110B

VOLUME 1

C:\Users\fernando\Documents_A_13024_Modll_2013_fernando.rvt
5/8/2015 1:19:34 PM

KEYED NOTES

1. EXPOSED STRUCTURE. PAINT.
2. CUBICLE CURTAINS. SEE ACCESSORY SCHEDULE.
3. roller window shades typ. all exterior windows. refer to accessory schedule. see specs.
4. ROOF ACCESS LADDER. SEE DETAIL C3/AE550
5. ROOF HATCH. SEE DETAIL D2/AE501

GENERAL NOTES

- GENERAL CONTRACTOR SHALL FIELD VERIFY ALL CONDITIONS AND SHALL REPORT TO THE ARCHITECT ANY UNKNOWN CONDITIONS, ERRORS OR CONFLICTS IN THE DRAWINGS BEFORE BEGINNING WORK.
- DO NOT SCALE DRAWINGS.

METAL SOFFIT PANEL

ACOUSTICAL CEILING TILE 24" X 24"

GYPSUM BOARD. PAINT.

1HR FIRE RATED BOTTOM OF SHAFT AT 10'-0" A.F.F. U.N.O. PER DETAIL C5 / AE530

RADIANT CEILING PANEL @ 10'- 0" A.F.F U.N.O.

SUSPENDED LIGHT FIXTURE

SUPPLY OR RETURN GRILLE. SEE MECHANICAL

LAY-IN MOUNTED LIGHT FIXUTRE. SEE ELECTRICAL

RECESSED LIGHT FIXTURE. SEE ELECTRICAL.

SURFACE MOUNTED LIGHT FIXTURE. SEE ELECTRICAL.

PROJECTOR SCREEN

SPEAKER

SMOKE DETECTOR

HORN STROBE

CEILING MOUNTED FAN COIL

PROJECTOR

MOTION SENSOR

CAMERA

CEILING ACCESS PANEL

STROBE

DROPCORD

FUME HOOD

UMBILICAL SERVICE CHASE

PHOTOCELL

KEY PLAN

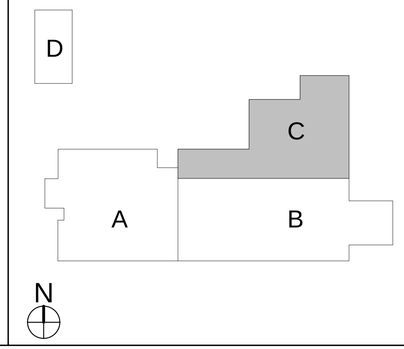

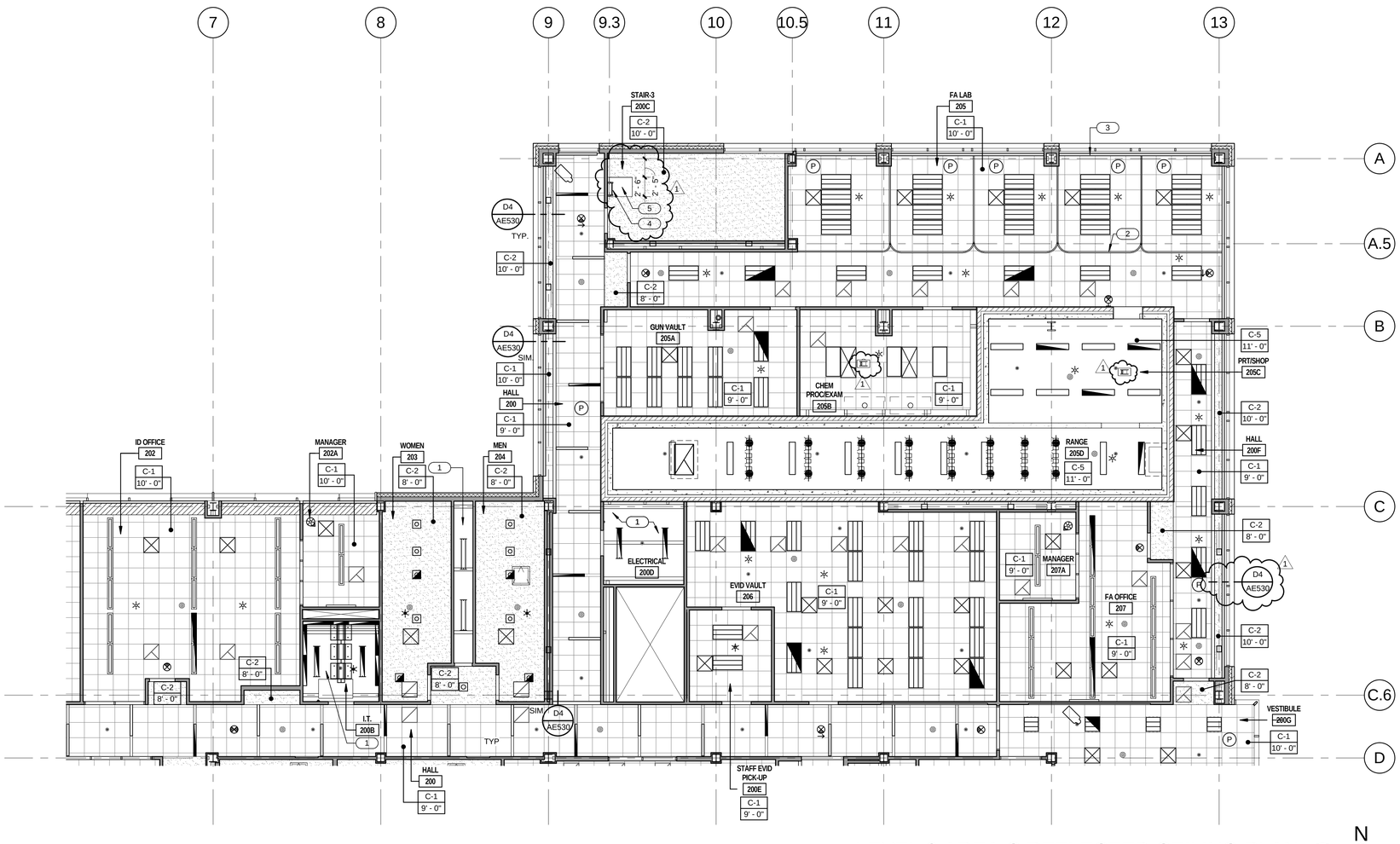

LEVEL 2 AREA C REFLECTED CEILING PLAN

1/8" = 1'-0"

A5 AE110C

N

C:\Users\fernando\Documents_A_13024_Modif_2013_fernando.rvt
5/8/2015 1:19:37 PM

CRSA

649 E. South Temple
Salt Lake City, UT 84102
801.355.5915

MWL

11798 N. Lakeridge Pkwy.
Ashland, VA 23005
804-228-7473

State of Utah
Department of Administrative Services

Division of Facilities Construction & Management
4110 State Office Building
Salt Lake City, Utah 84114
Phone: (801) 538 - 3018
Fax: (801) 538 - 3267

DFCM APPROVAL STAMP

STATE OF UTAH #134096 MEHRDAD SAMIE LICENSED ARCHITECT

04-28-2014

ARCHITECT-ENGINEER STAMP

Unified State Laboratory Module 2

4451 South 2700 West, Taylorsville, UT 84118

DFCM #:	13020300
Project #:	B13-024

DATE:	ISSUE TYPE:
APRIL 21, 2014	BID SET
MAY 8, 2015	ADD # 1

CHECKED BY	J. NIELSEN
DRAWN BY	F. PITORE

LEVEL 2 AREA C REFLECTED CEILING PLAN

AE110C

VOLUME 1

KEYED NOTES

1. STEEL COLUMN. SEE STRUCTURAL. PAINT WHERE EXPOSED.
2. ELEVATOR PIT.
3. ELEVATOR SUMP PIT.

GENERAL NOTES

- GENERAL CONTRACTOR SHALL FIELD VERIFY ALL CONDITIONS AND SHALL REPORT TO THE ARCHITECT ANY UNKNOWN CONDITIONS, ERRORS OR CONFLICTS IN THE DRAWINGS BEFORE BEGINNING WORK.
- DO NOT SCALE DRAWINGS.

RECESSED SLAB

SLAB PENETRATION

INSULATED SLAB. REFER TO LAB DETAILS IL506

KEY PLAN

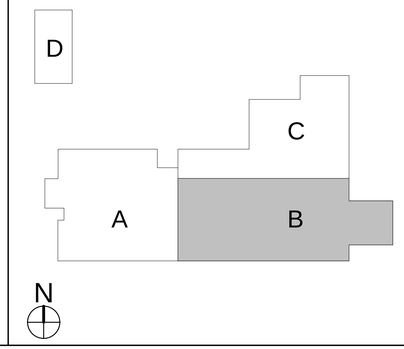

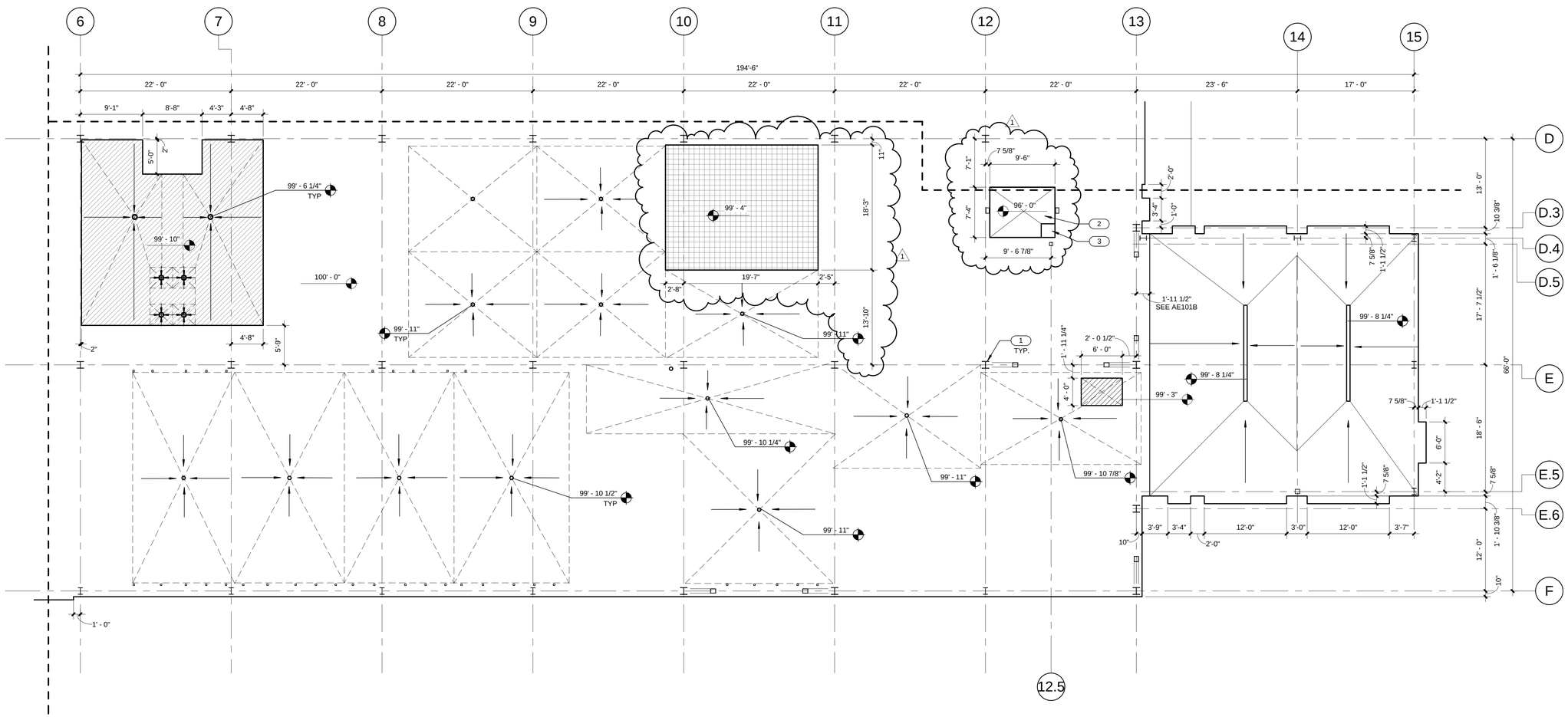

LEVEL 1 AREA B SLAB EDGE PLAN (A5 / AE112B)

1/8" = 1'-0"

CRSA

649 E. South Temple
Salt Lake City, UT 84102
801.355.5915

MWL

11798 N. Lakeridge Pkwy.
Ashland, VA 23005
804-228-7473

State of Utah
Department of Administrative Services

Division of Facilities Construction & Management
4110 State Office Building
Salt Lake City, Utah 84114
Phone: (801) 538 - 3018
Fax: (801) 538 - 3267

DFCM APPROVAL STAMP

STATE OF UTAH #134096 MEHRDAD SAMIE LICENSED ARCHITECT
04-28-2014
ARCHITECT-ENGINEER STAMP

Unified State Laboratory Module 2

4451 South 2700 West, Taylorsville, UT 84118

DFCM #:	13020300
Project #:	B13-024

DATE:	ISSUE TYPE:
APRIL 21, 2014	BID SET
MAY 8, 2015	ADD # 1

CHECKED BY	J. NIELSEN
DRAWN BY	F. PITORE

LEVEL 1 AREA B SLAB EDGE PLAN

AE112B

VOLUME 1

C:\Users\femando\Documents_A_13024_Modti_2013_femando.rvt
5/8/2015 1:19:37 PM

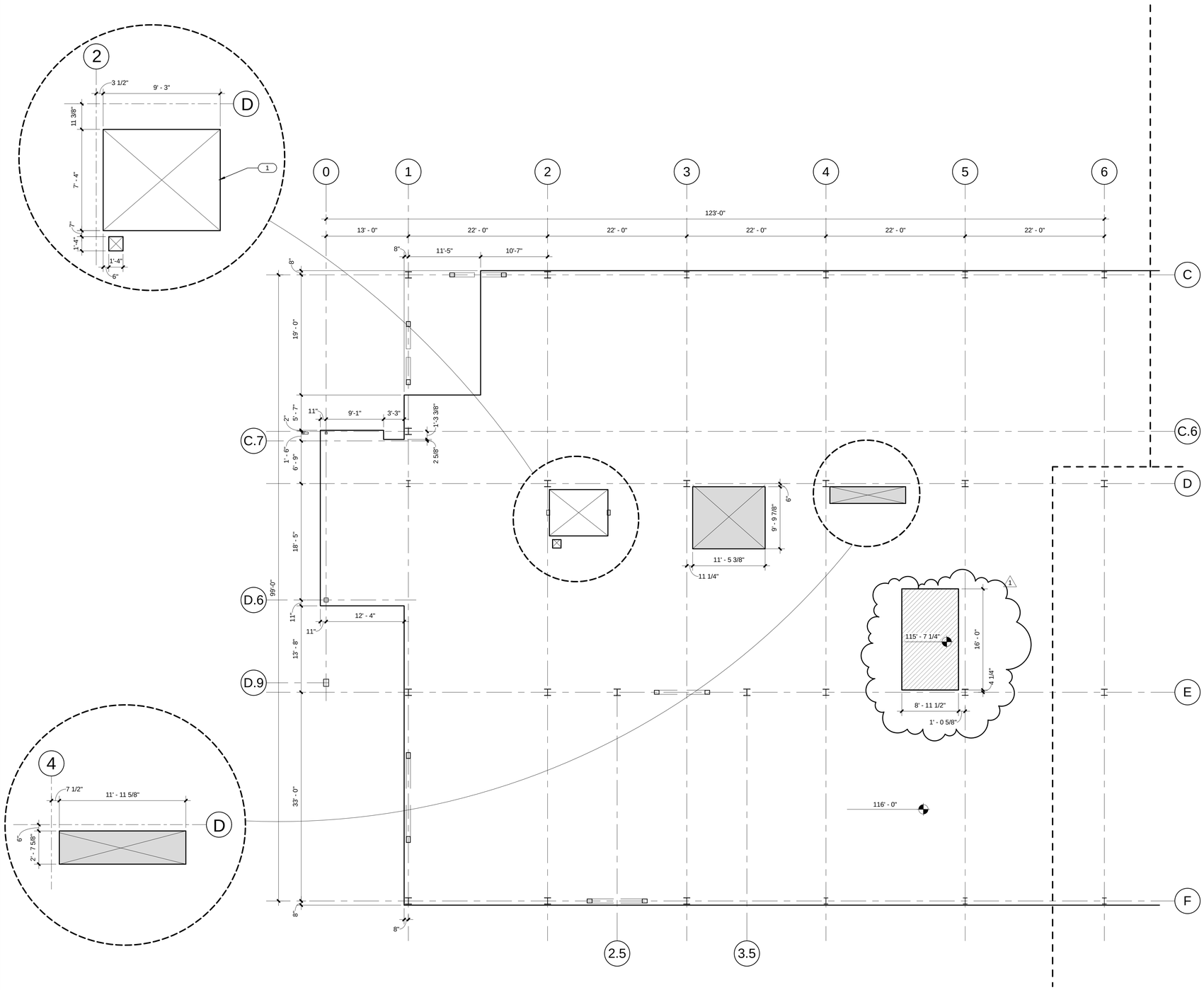

LEVEL 2 AREA A SLAB EDGE PLAN (A4 / AE113A)

1/8" = 1'-0"

GENERAL NOTES

- GENERAL CONTRACTOR SHALL FIELD VERIFY ALL CONDITIONS AND SHALL REPORT TO THE ARCHITECT ANY UNKNOWN CONDITIONS, ERRORS OR CONFLICTS IN THE DRAWINGS BEFORE BEGINNING WORK.
- DO NOT SCALE DRAWINGS.

RECESSED SLAB

SLAB PENETRATION

INSULATED SLAB. REFER TO LAB DETAILS IL506

KEYED NOTES

1 OPENING FOR ELEVATOR SHAFT.

KEY PLAN

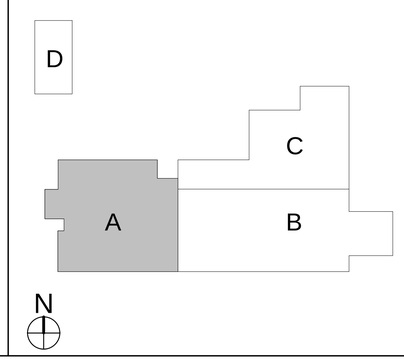

CRSA

649 E. South Temple
Salt Lake City, UT 84102
801.355.5915

MWL

11798 N. Lakeridge Pkwy.
Ashland, VA 23005
804-228-7473

State of Utah
Department of Administrative Services
Division of Facilities Construction & Management
4110 State Office Building
Salt Lake City, Utah 84114
Phone: (801) 538 - 3018
Fax: (801) 538 - 3267

DFCM APPROVAL STAMP

STATE OF UTAH #134096 MEHRDAD SAMIE LICENSED ARCHITECT

04-28-2014

ARCHITECT-ENGINEER STAMP

Unified State Laboratory Module 2

4451 South 2700 West, Taylorsville, UT 84118

DFCM #: 13020300

Project #: B13-024

DATE:	ISSUE TYPE:
APRIL 21, 2014	BID SET
MAY 8, 2015	ADD # 1

CHECKED BY	J. NIELSEN
DRAWN BY	F. PITORE

LEVEL 2 AREA A SLAB EDGE PLAN

AE113A

VOLUME 1

C:\Users\fernando\Documents_A_13024_Modli_2013_fernando.rvt
5/8/2015 1:19:40 PM

KEYED NOTES

1 OPENING FOR ELEVATOR SHAFT.

GENERAL NOTES

- GENERAL CONTRACTOR SHALL FIELD VERIFY ALL CONDITIONS AND SHALL REPORT TO THE ARCHITECT ANY UNKNOWN CONDITIONS, ERRORS OR CONFLICTS IN THE DRAWINGS BEFORE BEGINNING WORK.
- DO NOT SCALE DRAWINGS.

RECESSED SLAB

SLAB PENETRATION

INSULATED SLAB. REFER TO LAB DETAILS IL506

KEY PLAN

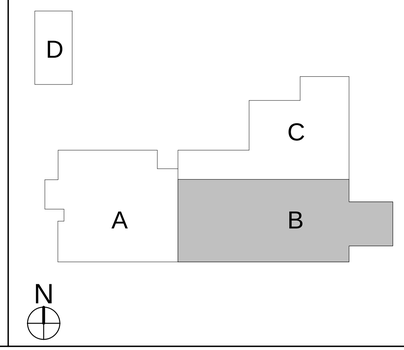

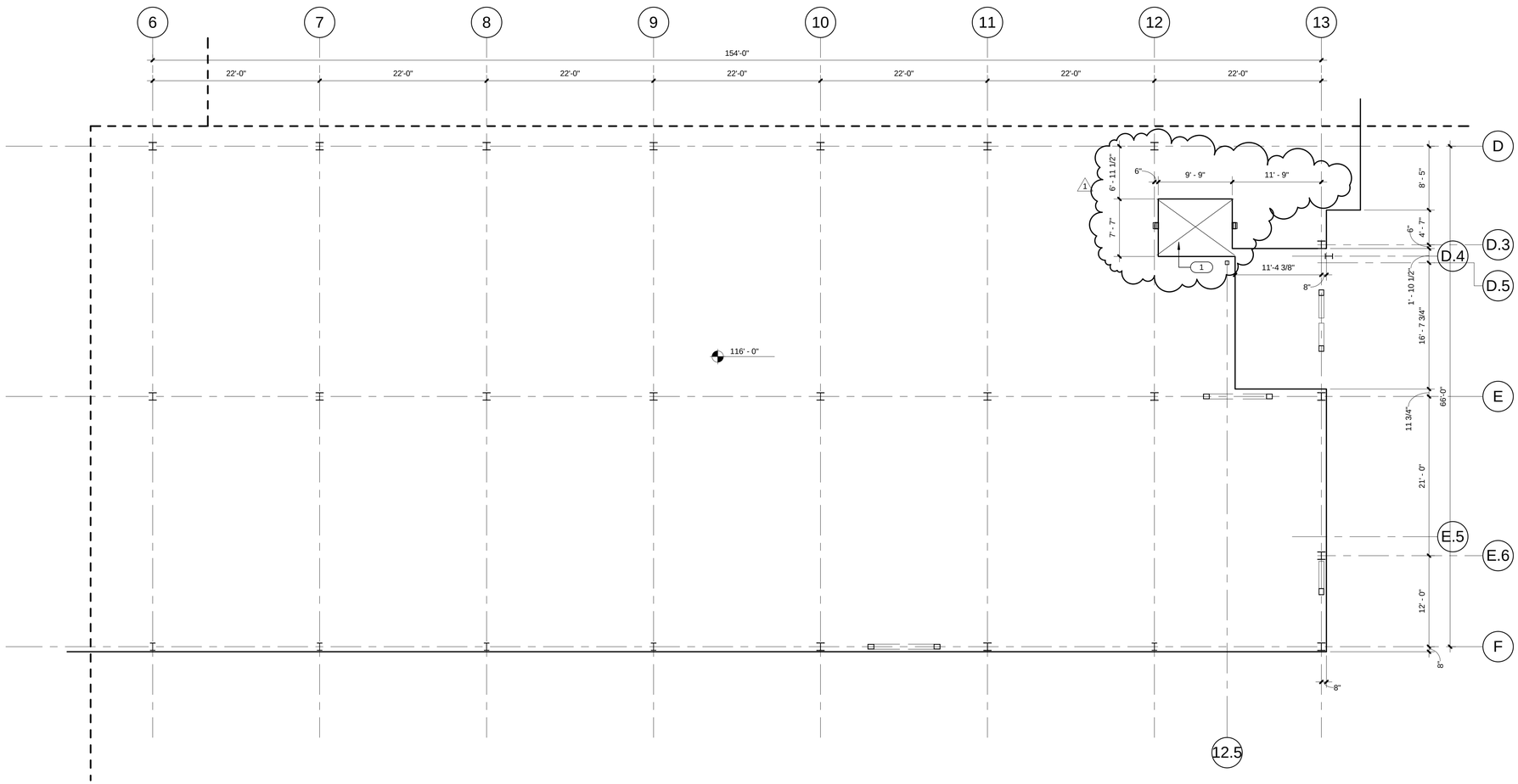

LEVEL 2 AREA B SLAB EDGE PLAN (A5 / AE113B)

1/8" = 1'-0"

CRSA

649 E. South Temple
Salt Lake City, UT 84102
801.355.5915

MWL

11798 N. Lakeridge Pkwy.
Ashland, VA 23005
804-228-7473

State of Utah
Department of Administrative Services

Division of Facilities Construction & Management
4110 State Office Building
Salt Lake City, Utah 84114
Phone: (801) 538 - 3018
Fax: (801) 538 - 3267

DFCM APPROVAL STAMP

STATE OF UTAH #134096 MEHRDAD SAMII LICENSED ARCHITECT

04.28.2014

ARCHITECT-ENGINEER STAMP

Unified State Laboratory Module 2

4451 South 2700 West, Taylorsville, UT 84118

DFCM #: 13020300

Project #: B13-024

DATE:	ISSUE TYPE:
APRIL 21, 2014	BID SET
MAY 8, 2015	ADD # 1

CHECKED BY	J. NIELSEN
DRAWN BY	F. PITORE

LEVEL 2 AREA B SLAB EDGE PLAN

AE113B

VOLUME 1

C:\Users\fernando\Documents_A_13024_Modll_2013_fernando.rvt
5/8/2015 1:19:43 PM

KEYED NOTES

1 STEEL COLUMN. SEE STRUCTURAL. PAINT WHERE EXPOSED.
2 BRACE FRAME. PAINT WHERE EXPOSED. SEE STRUCTURAL.

GENERAL NOTES

- GENERAL CONTRACTOR SHALL FIELD VERIFY ALL CONDITIONS AND SHALL REPORT TO THE ARCHITECT ANY UNKNOWN CONDITIONS, ERRORS OR CONFLICTS IN THE DRAWINGS BEFORE BEGINNING WORK.
- DO NOT SCALE DRAWINGS.

RECESSED SLAB

SLAB PENETRATION

INSULATED SLAB. REFER TO LAB DETAILS IL506

KEY PLAN

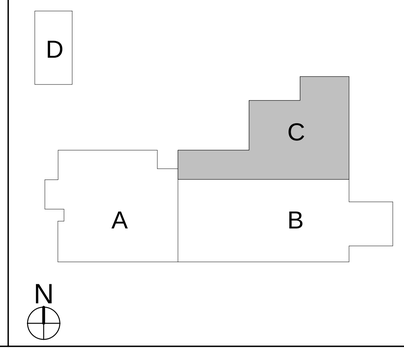

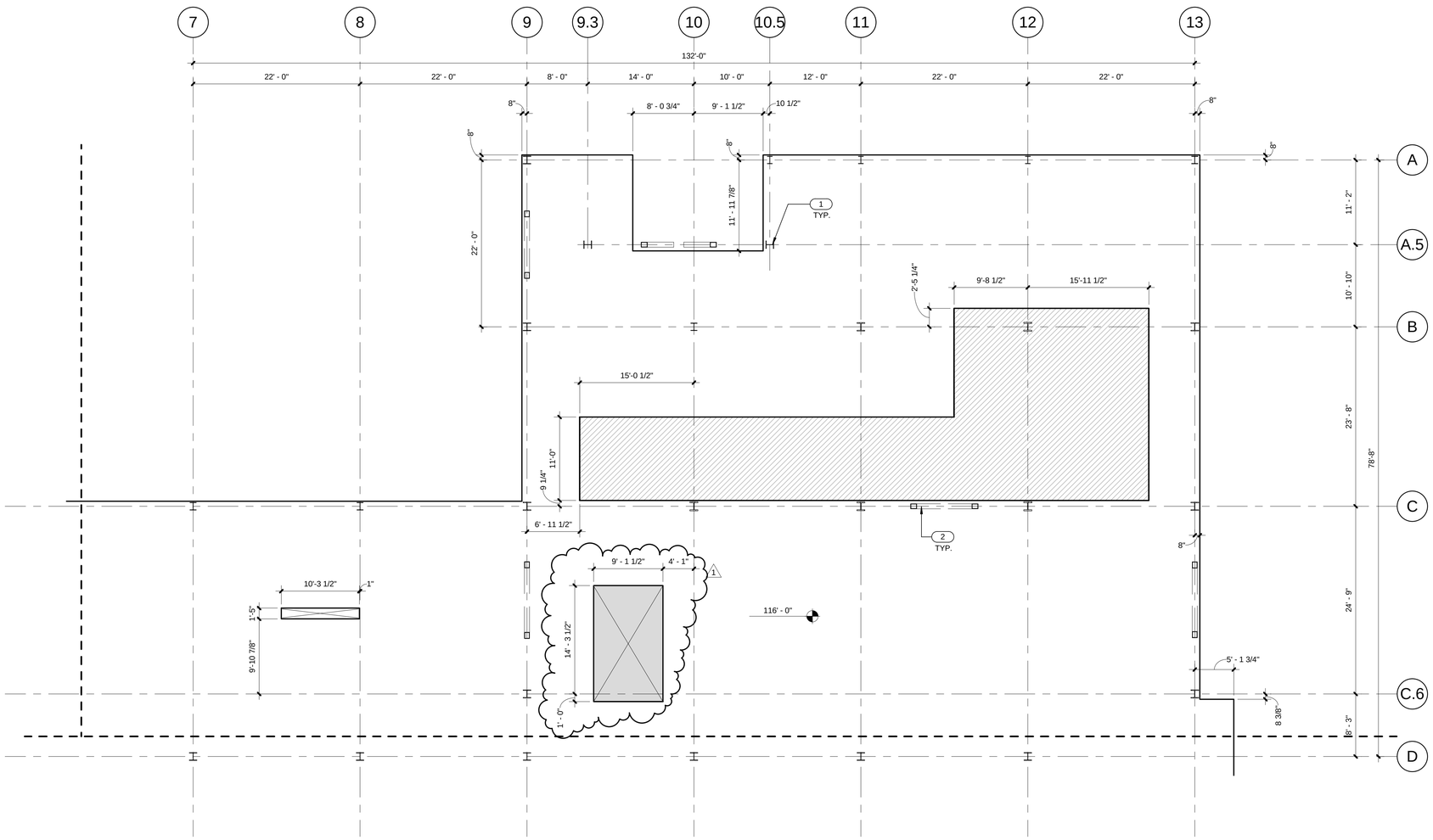

LEVEL 2 AREA C SLAB EDGE PLAN (A5 / AE113C)
1/8" = 1'-0"

CRSA
649 E. South Temple
Salt Lake City, UT 84102
801.355.5915

MWL
11798 N. Lakeridge Pkwy.
Ashland, VA 23005
804-228-7473

State of Utah
Department of Administrative Services
Division of Facilities Construction & Management
DFCM
4110 State Office Building
Salt Lake City, Utah 84114
Phone: (801) 538 - 3018
Fax: (801) 538 - 3267

DFCM APPROVAL STAMP

STATE OF UTAH #134096 MEHRDAD SAMIE LICENSED ARCHITECT
04-28-2014
ARCHITECT-ENGINEER STAMP

Unified State Laboratory Module 2

4451 South 2700 West, Taylorsville, UT 84118

DFCM #: 13020300
Project #: B13-024

DATE:	ISSUE TYPE:
APRIL 21, 2014	BID SET
MAY 8, 2015	ADD # 1

CHECKED BY	J. NIELSEN
DRAWN BY	F. PITORE

LEVEL 2 AREA C SLAB EDGE PLAN

AE113C

VOLUME 1

C:\Users\fernando\Documents_A_13024_Moafi_2013_fernando.rvt
5/8/2015 1:19:47 PM

KEYED NOTES

1. STEEL COLUMN. SEE STRUCTURAL. PAINT WHERE EXPOSED.
2. OPENING FOR ELEVATOR SHAFT.
3. BRACE FRAME. PAINT WHERE EXPOSED. SEE STRUCTURAL.

GENERAL NOTES

- GENERAL CONTRACTOR SHALL FIELD VERIFY ALL CONDITIONS AND SHALL REPORT TO THE ARCHITECT ANY UNKNOWN CONDITIONS, ERRORS OR CONFLICTS IN THE DRAWINGS BEFORE BEGINNING WORK.
- DO NOT SCALE DRAWINGS.

RECESSED SLAB

SLAB PENETRATION

INSULATED SLAB. REFER TO LAB DETAILS IL506

KEY PLAN

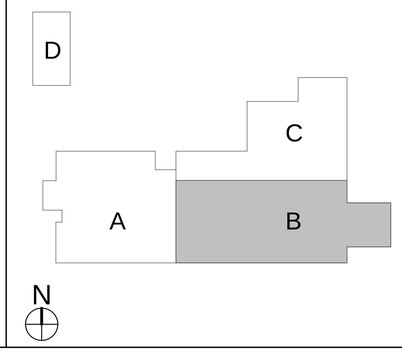

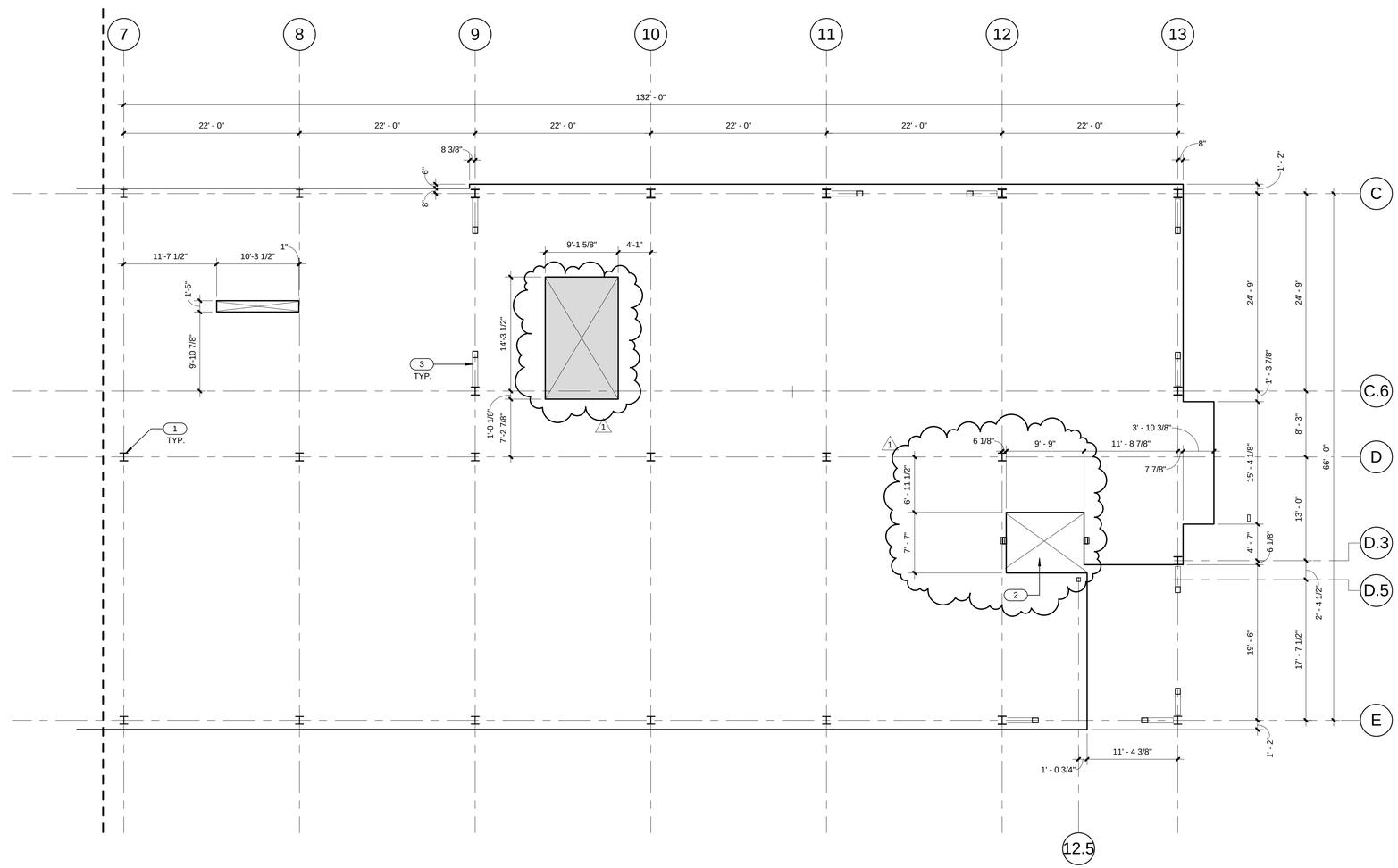

LEVEL 3 AREA B SLAB EDGE PLAN (A5 / AE114B)

1/8" = 1'-0"

CRSA

649 E. South Temple
Salt Lake City, UT 84102
801.355.5915

MWL

11798 N. Lakeridge Pkwy.
Ashland, VA 23005
804-228-7473

State of Utah
Department of Administrative Services

Division of Facilities Construction & Management
4110 State Office Building
Salt Lake City, Utah 84114
Phone: (801) 538 - 3018
Fax: (801) 538 - 3267

DFCM APPROVAL STAMP

STATE OF UTAH #134096 MEHRDAD SAMIE LICENSED ARCHITECT

04.28.2014

ARCHITECT-ENGINEER STAMP

Unified State Laboratory Module 2

4451 South 2700 West,
Taylorsville, UT 84118

DFCM #:	13020300
Project #:	B13-024

DATE:	ISSUE TYPE:
APRIL 21, 2014	BID SET
MAY 8, 2015	ADD # 1

CHECKED BY	J. NIELSEN
DRAWN BY	F. PITORE

LEVEL 3 AREA B SLAB EDGE PLAN

AE114B

VOLUME 1

C:\Users\fernando\Documents_A_13024_Modll_2013_fernando.rvt
5/8/2015 1:19:50 PM

KEYED NOTES

1. OPENING FOR ELEVATOR SHAFT.
2. BRACE FRAME. PAINT WHERE EXPOSED. SEE STRUCTURAL.
3. STEEL COLUMN. SEE STRUCTURAL. PAINT WHERE EXPOSED.
4. 6" CONCRETE HOUSEKEEPING PAD. COORDINATE SIZE & PLACEMENT WITH MECHANICAL EQUIPMENT. SEE FINISH SCHEDULE.

GENERAL NOTES

- GENERAL CONTRACTOR SHALL FIELD VERIFY ALL CONDITIONS AND SHALL REPORT TO THE ARCHITECT ANY UNKNOWN CONDITIONS, ERRORS OR CONFLICTS IN THE DRAWINGS BEFORE BEGINNING WORK.
- DO NOT SCALE DRAWINGS.

RECESSED SLAB

SLAB PENETRATION

INSULATED SLAB. REFER TO LAB DETAILS IL506

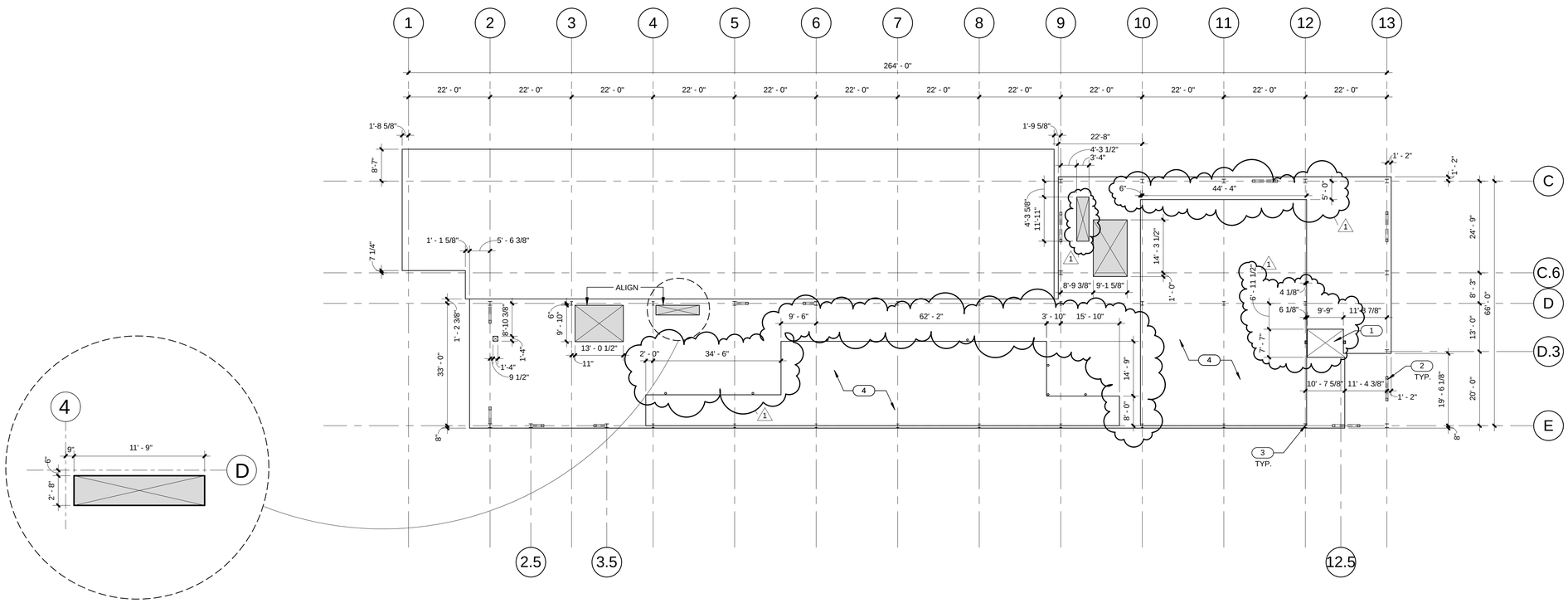

SLAB EDGE PLAN PENTHOUSE LEVEL

1/16" = 1'-0"

A5 / AE115

N

CRSA

649 E. South Temple
Salt Lake City, UT 84102
801.355.5915

MWL

11798 N. Lakeridge Pkwy.
Ashland, VA 23005
804-228-7473

State of Utah
Department of Administrative Services

Division of Facilities Construction & Management
4110 State Office Building
Salt Lake City, Utah 84114
Phone: (801) 538 - 3018
Fax: (801) 538 - 3267

DFCM APPROVAL STAMP

STATE OF UTAH #134096 MEHRDAD SAMIE LICENSED ARCHITECT

04-28-2014

ARCHITECT-ENGINEER STAMP

Unified State Laboratory Module 2

4451 South 2700 West, Taylorsville, UT 84118

DFCM #: 13020300

Project #: B13-024

DATE:	ISSUE TYPE:
APRIL 21, 2014	BID SET
MAY 8, 2015	ADD # 1

CHECKED BY	J. NIELSEN
DRAWN BY	F. PITORE

PENTHOUSE LEVEL SLAB EDGE PLAN

AE115

VOLUME 1

C:\Users\fernando\Documents_A_13024_Modil_2013_fernando.rvt
5/8/2015 1:19:53 PM

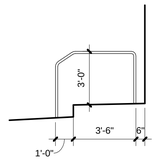

ROOF DETAIL D2 / AE120
1/4" = 1'-0"

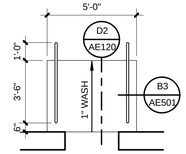

ROOF DETAIL D3 / AE120
1/4" = 1'-0"

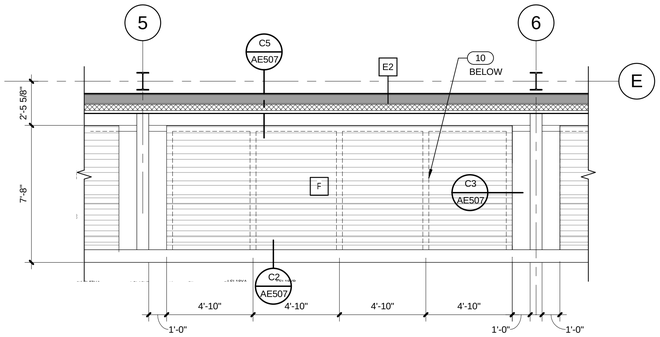

TRELLIS PLAN D4 / AE120
1/4" = 1'-0"

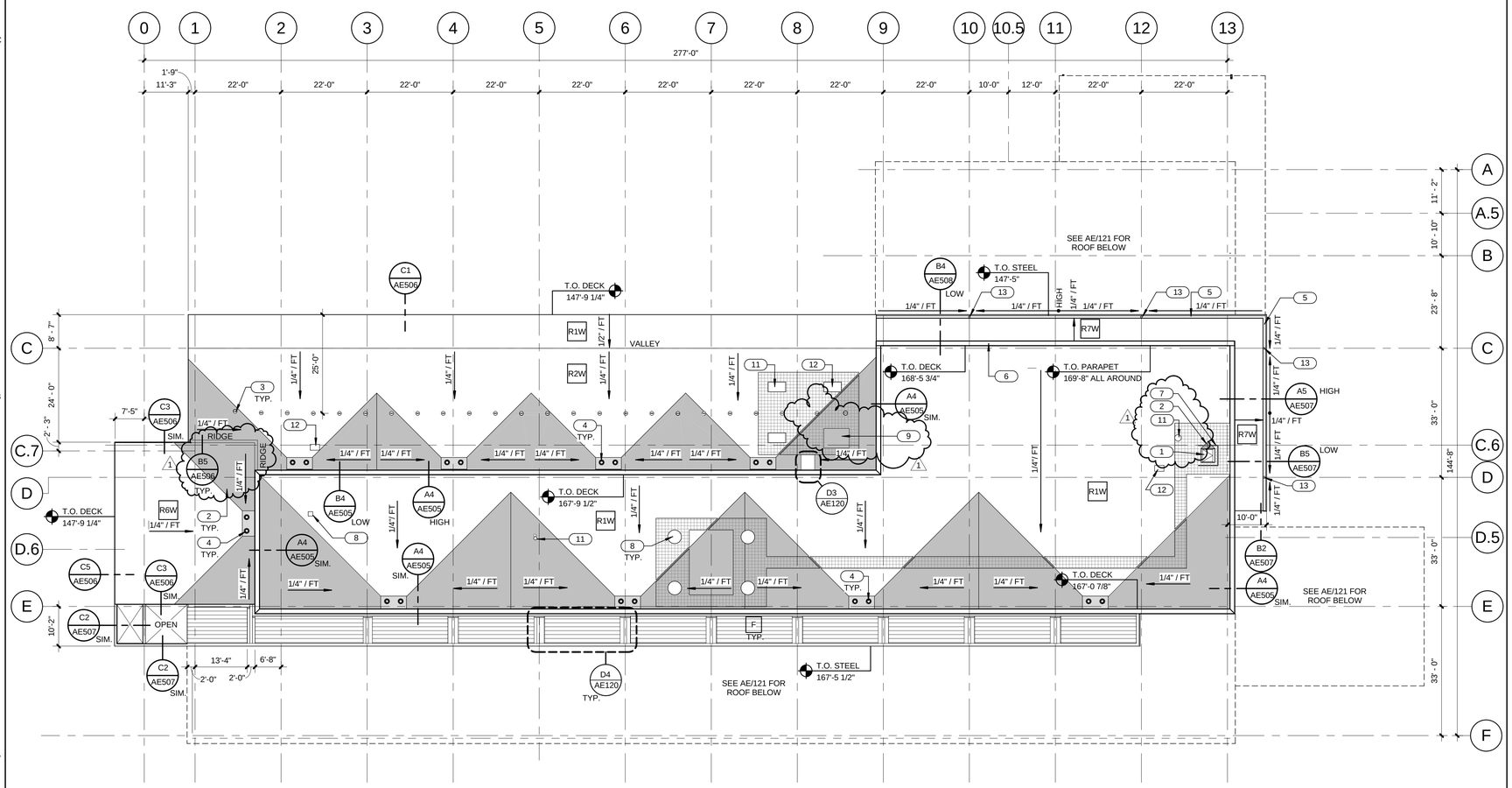

UPPER ROOF PLAN A4 / AE120
1/16" = 1'-0"

N

GENERAL NOTES

- GENERAL CONTRACTOR SHALL FIELD VERIFY ALL CONDITIONS AND SHALL REPORT TO THE ARCHITECT ANY UNKNOWN CONDITIONS, ERRORS OR CONFLICTS IN THE DRAWINGS BEFORE BEGINNING WORK.
- DO NOT SCALE DRAWINGS.

CRICKET

WALK PAD

KEYED NOTES

1 ROOF HATCH. SEE DETAIL D2/AE501
2 ROOF CRICKET.
3 ROOF ANCHOR @ 6'-8" O.C. FLASHING PER DETAIL C5/AE501.
4 ROOF DRAIN. SEE DETAIL A5/AE501
5 INTEGRAL GUTTER. SEE REFERENCED DETAIL.
6 PARAPET CAP FLASHING. SEE REFERENCED DETAIL.
7 SAFETY GUARDRAIL. SEE DETAIL C4/AE501.
8 EXHAUST FAN. SEE MECHANICAL DRAWINGS.
9 MECHANICAL EQUIPMENT. SEE MECHANICAL DRAWINGS.
10 STEEL BEAM. PAINT WHERE EXPOSED. SEE STRUCTURAL.
11 EXHAUST FAN. SEE MECHANICAL DRAWINGS.
12 CONDENSOR. SEE MECHANICAL DRAWINGS AND CONTROLLED TEMP. ROOM SPEC.
13 ROOF DRAIN. SEE PLUMBING DRAWINGS.

CRSA
649 E. South Temple
Salt Lake City, UT 84102
801.355.5915

MWL
11798 N. Lakeridge Pkwy.
Ashland, VA 23005
804-228-7473

State of Utah
Department of Administrative Services
Division of Facilities Construction & Management
4110 State Office Building
Salt Lake City, Utah 84114
Phone: (801) 538 - 3018
Fax: (801) 538 - 3267

DFCM APPROVAL STAMP

STATE OF UTAH #134096 MEHRDAD SAMIE LICENSED ARCHITECT
04.28.2014
ARCHITECT-ENGINEER STAMP

Unified State Laboratory Module 2

4451 South 2700 West, Taylorsville, UT 84118

DFCM #: 13020300

Project #: B13-024

DATE:	ISSUE TYPE:
APRIL 21, 2014	BID SET
MAY 8, 2015	ADD # 1

CHECKED BY	J. NIELSEN
DRAWN BY	F. PITORE

UPPER ROOF PLAN

AE120

VOLUME 1

C:\Users\fernando\Documents_A_13024_Modll_2013_fernando.rvt
5/8/2015 1:20:06 PM

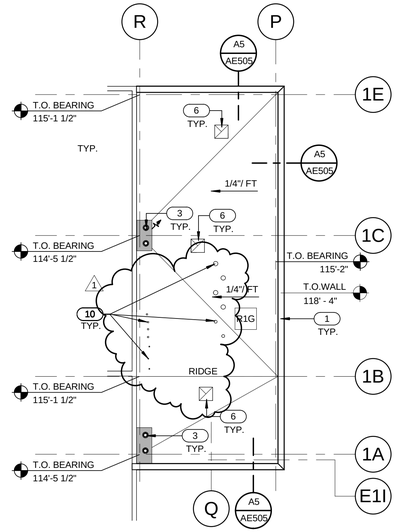

MECHANICAL ROOM ROOF PLAN C2 AE121
1/16" = 1'-0"

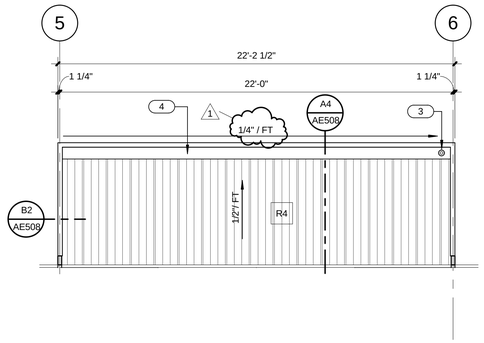

ENLARGED ROOF PLAN C3 AE121
1/4" = 1'-0"

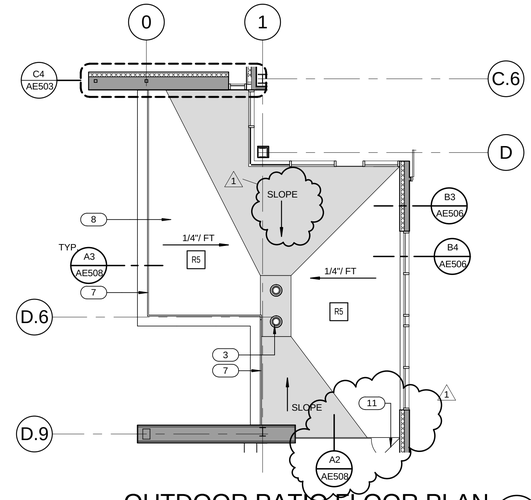

OUTDOOR PATIO FLOOR PLAN C4 AE121
1/8" = 1'-0"

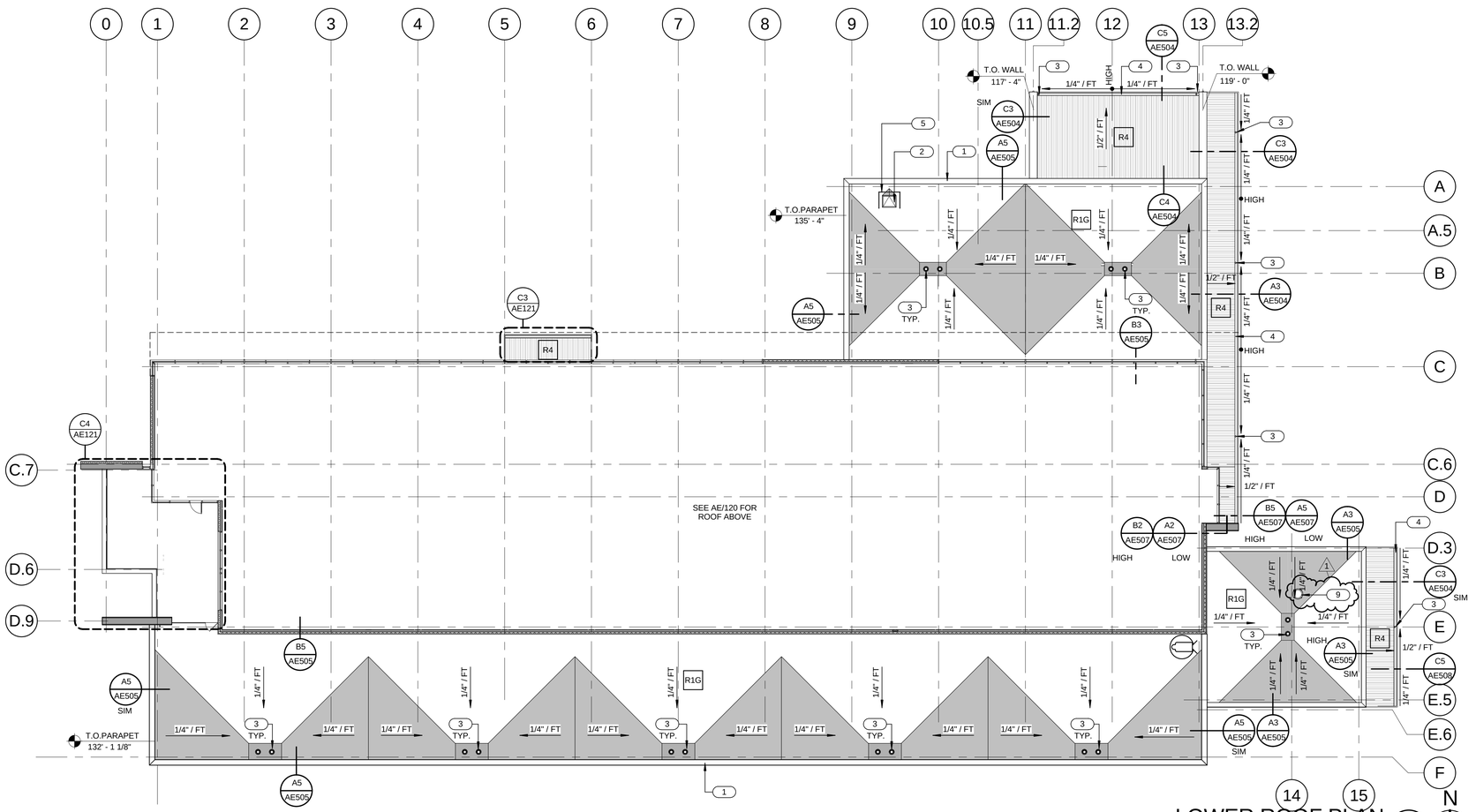

LOWER ROOF PLAN A5 AE121
1/16" = 1'-0"

GENERAL NOTES

- GENERAL CONTRACTOR SHALL FIELD VERIFY ALL CONDITIONS AND SHALL REPORT TO THE ARCHITECT ANY UNKNOWN CONDITIONS, ERRORS OR CONFLICTS IN THE DRAWINGS BEFORE BEGINNING WORK.
- DO NOT SCALE DRAWINGS.

CRICKET

WALK PAD

KEYED NOTES

1 PARAPET CAP FLASHING. SEE REFERENCED DETAIL.
2 ROOF HATCH. SEE DETAIL D2/AE501
3 ROOF DRAIN. SEE DETAIL A5/AE501
4 INTEGRAL GUTTER. SEE REFERENCED DETAIL.
5 SAFETY GUARDRAIL. SEE DETAIL C4/AE501.
6 MECHANICAL EQUIPMENT. SEE MECHANICAL DRAWINGS.
7 GUARDRAIL. SEE A3/AE508 AND A2/AE508.
8 PAVERS. SEE SHEET AE/121.
9 EXHAUST FAN. SEE MECHANICAL DRAWINGS.
10 EXHAUST HOOD. SEE MECHANICAL DRAWINGS.
11 GUARDRAIL GATE. SEE B3/AE508

CRSA
649 E. South Temple
Salt Lake City, UT 84102
801.355.5915

MWL
11798 N. Lakeridge Pkwy.
Ashland, VA 23005
804-228-7473

State of Utah
Department of Administrative Services
DFCM
Division of Facilities Construction & Management
4110 State Office Building
Salt Lake City, Utah 84114
Phone: (801) 538 - 3018
Fax: (801) 538 - 3267

DFCM APPROVAL STAMP

STATE OF UTAH #134096 MEHRDAD SAMIE LICENSED ARCHITECT
04.28.2014
ARCHITECT-ENGINEER STAMP

Unified State Laboratory Module 2

4451 South 2700 West, Taylorsville, UT 84118

DFCM #:	13020300
Project #:	B13-024

DATE:	ISSUE TYPE:
APRIL 21, 2014	BID SET
MAY 8, 2015	ADD # 1

CHECKED BY	J. NIELSEN
DRAWN BY	F. PITORE

LOWER ROOF PLAN

AE121

VOLUME 1

C:\Users\fernando\Documents_A_13024_Modll_2013_fernando.rvt
5/8/2015 1:20:16 PM

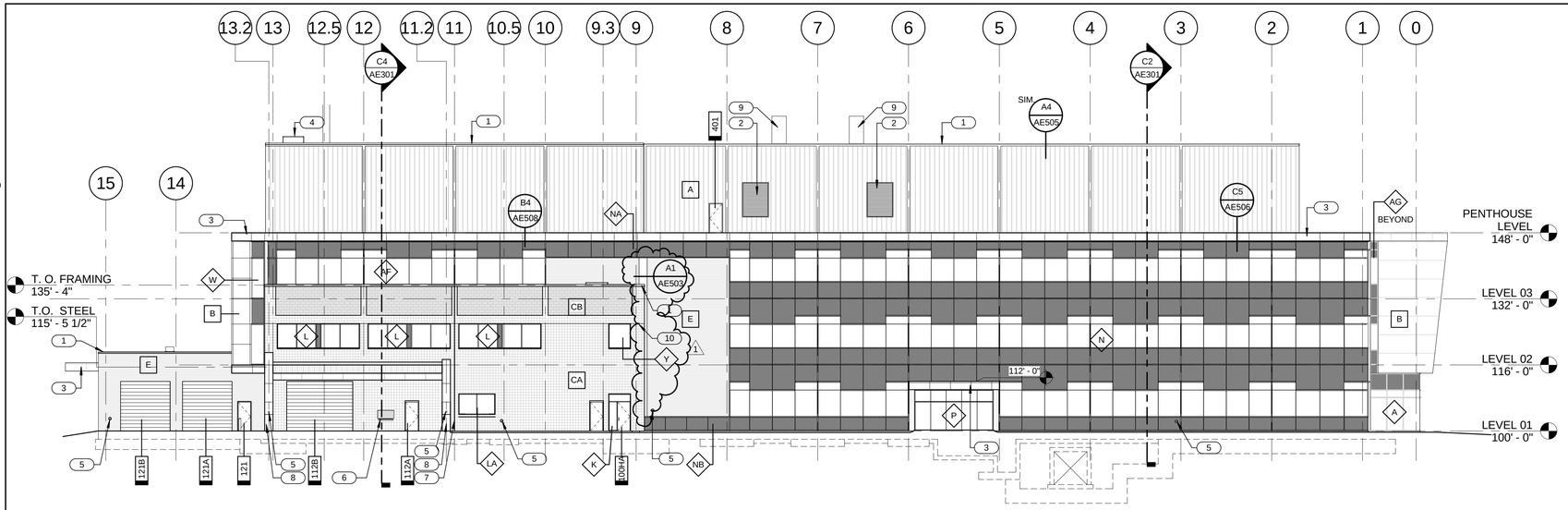

NORTH ELEVATION

1/16" = 1'-0" (C4 / AE201)

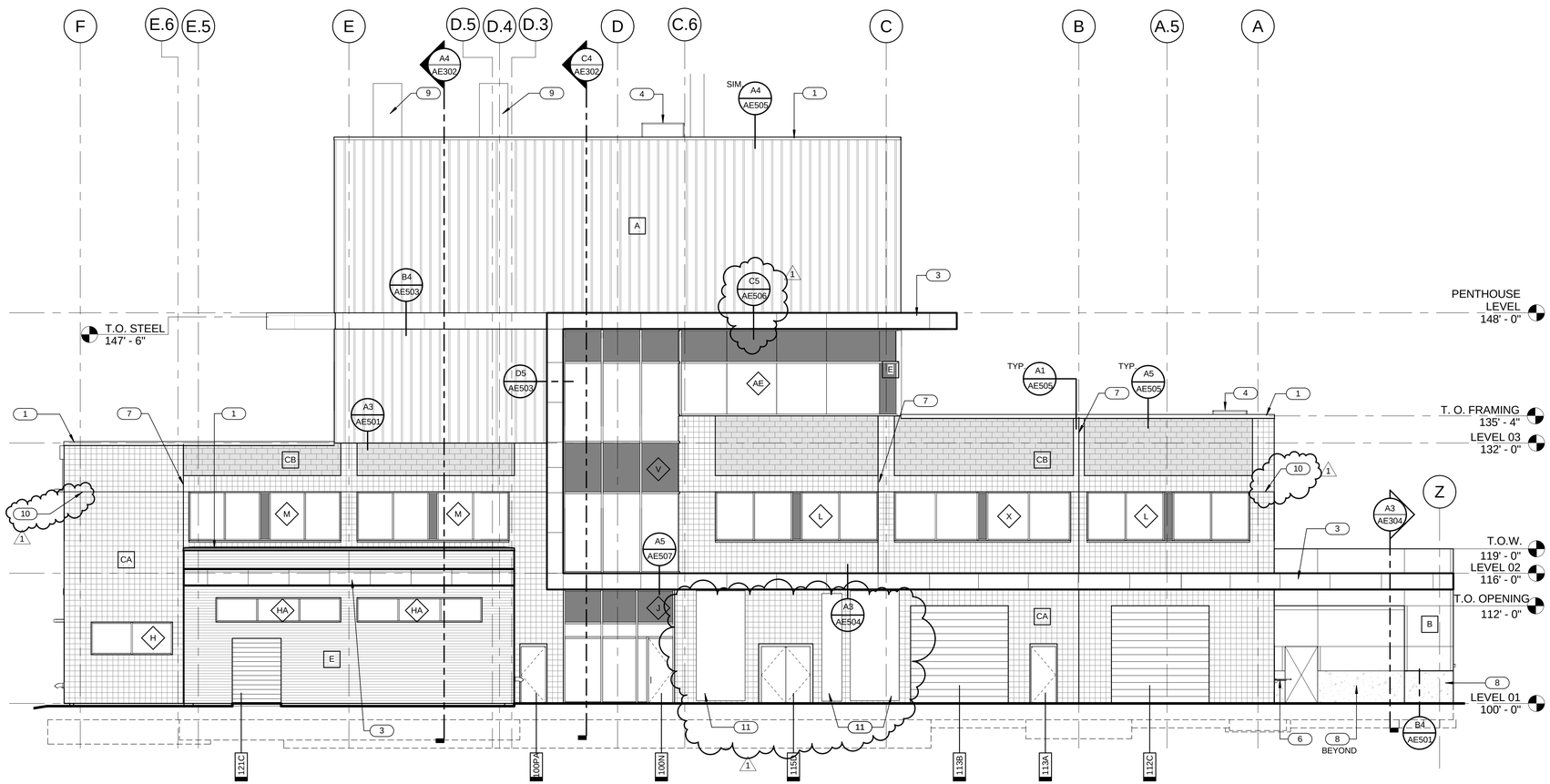

EAST ELEVATION

1/8" = 1'-0" (A4 / AE201)

GENERAL NOTES

- GENERAL CONTRACTOR SHALL FIELD VERIFY ALL CONDITIONS AND SHALL REPORT TO THE ARCHITECT ANY UNKNOWN CONDITIONS, ERRORS OR CONFLICTS IN THE DRAWINGS BEFORE BEGINNING WORK.
- DO NOT SCALE DRAWINGS.

METAL PANEL A	A		
METAL PANEL B	B		
METAL PANEL E	E		
CMU - A CA	CA		
CMU - B	CB	SET THIS PANEL 1" PROUD OF PANEL CA	
CMU - C	CC	GRAY TO MATCH EXISTING	
CMU - D	CD	TAN TO MATCH EXISTING	

KEYED NOTES

1. PARAPET CAP FLASHING. SEE REFERENCED DETAIL.
2. MECHANICAL LOUVER. SEE MECHANICAL DRAWINGS.
3. METAL FASCIA.
4. SAFETY GUARDRAIL. SEE DETAIL C4/AE501.
5. DOWNSPOUT NOZZLE. SEE PLUMBING DRAWINGS.
6. FOLD DOWN SURFACE. SEE IL DRAWINGS.
7. CONTROL JOINT.
8. ARCHITECTURAL CONCRETE WALL.
9. EXHAUST FLUE. SEE MECHANICAL DRAWINGS.
10. COPE BRICK @ LINTEL TO CREATE UNIFORM MORTAR JOINT SIZE.
11. ELECTRICAL PANEL. SEE ELECTRICAL DRAWINGS.

CRSA
649 E. South Temple
Salt Lake City, UT 84102
801.355.5915

MWL
11798 N. Lakeridge Pkwy.
Ashland, VA 23005
804-228-7473

State of Utah
Department of Administrative Services
Division of Facilities Construction & Management
4110 State Office Building
Salt Lake City, Utah 84114
Phone: (801) 538 - 3018
Fax: (801) 538 - 3267

DFCM APPROVAL STAMP

STATE OF UTAH #134096 MEHRDAD SAMIE LICENSED ARCHITECT
04.28.2014
ARCHITECT-ENGINEER STAMP

Unified State Laboratory Module 2

4451 South 2700 West, Taylorsville, UT 84118

DFCM #:	13020300
Project #:	B13-024

DATE:	ISSUE TYPE:
APRIL 21, 2014	BID SET
MAY 8, 2015	ADD # 1
CHECKED BY	J. NIELSEN
DRAWN BY	F. PITORE

EXTERIOR ELEVATIONS

AE201

VOLUME 1

C:\Users\fernando\Documents_A_13024_Modli_2013_fernando.rvt
5/8/2015 2:25:10 PM

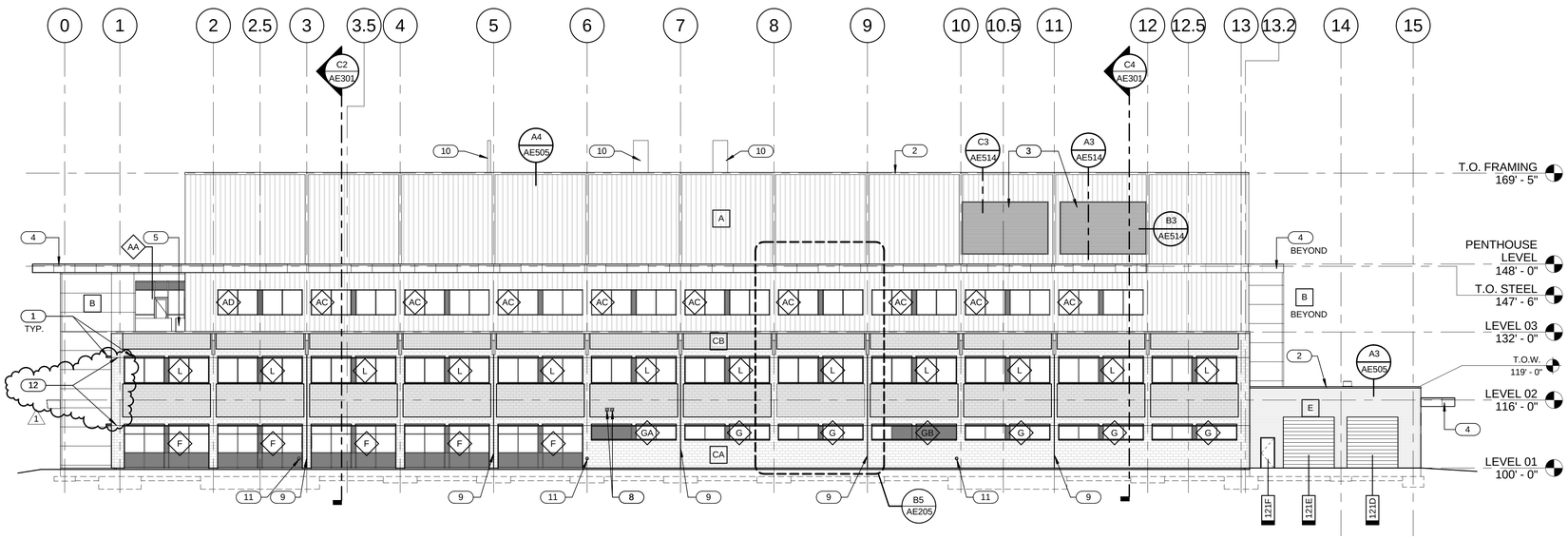

SOUTH ELEVATION C4 AE202
1/16" = 1'-0"

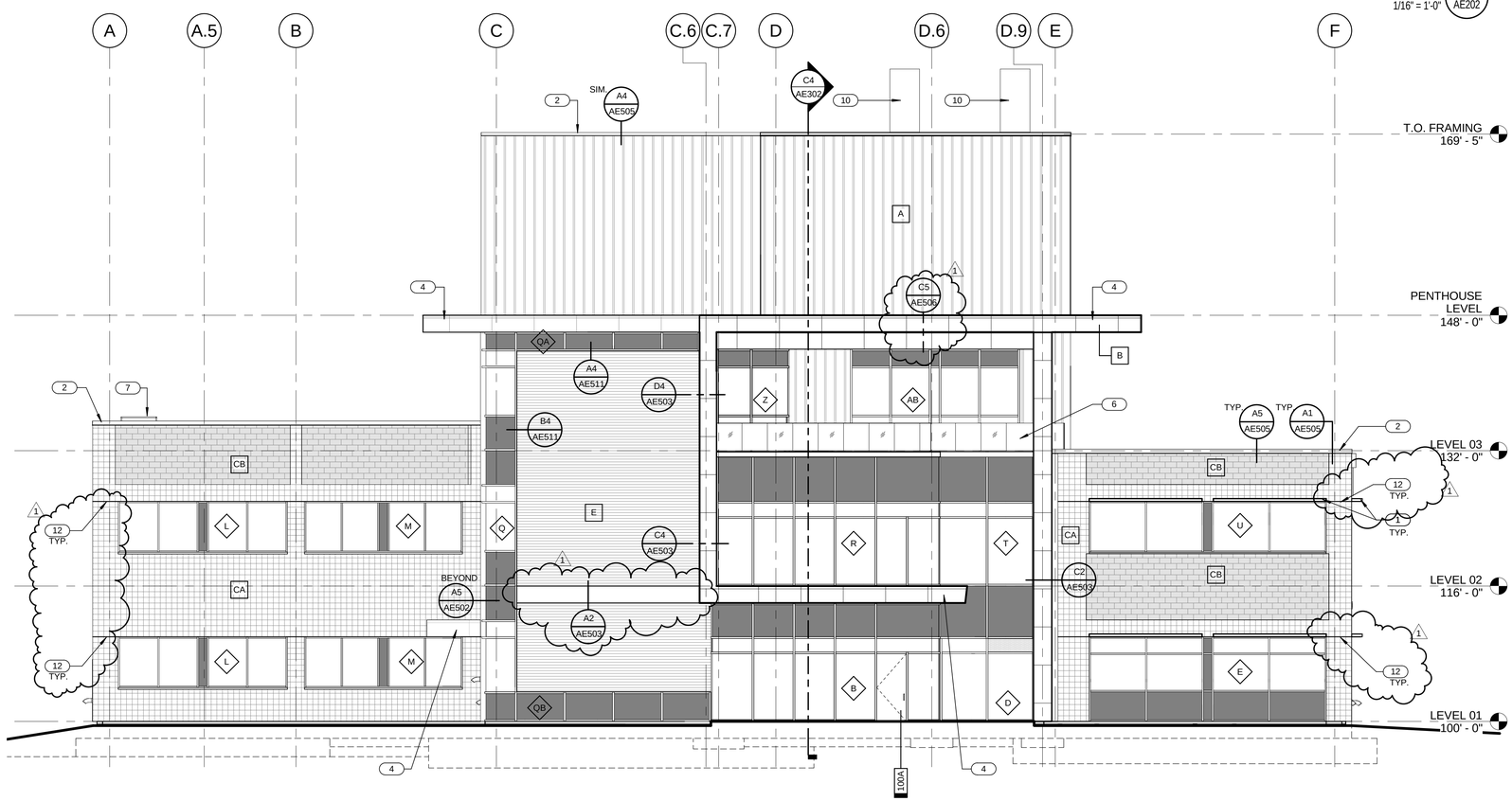

WEST ELEVATION A4 AE202
1/8" = 1'-0"

GENERAL NOTES

- GENERAL CONTRACTOR SHALL FIELD VERIFY ALL CONDITIONS AND SHALL REPORT TO THE ARCHITECT ANY UNKNOWN CONDITIONS, ERRORS OR CONFLICTS IN THE DRAWINGS BEFORE BEGINNING WORK.
- DO NOT SCALE DRAWINGS.

METAL PANEL A	A		
METAL PANEL B	B		
METAL PANEL E	E		
CMU - A CA	CA		
CMU - B	CB	SET THIS PANEL 1" PROUD OF PANEL CA	
CMU - C	CC	GRAY TO MATCH EXISTING	
CMU - D	CD	TAN TO MATCH EXISTING	

KEYED NOTES

1 SUNSHADE.
2 PARAPET CAP FLASHING. SEE REFERENCED DETAIL.
3 MECHANICAL LOUVER. SEE MECHANICAL DRAWINGS.
4 METAL FASCIA.
5 GUARDRAIL GATE. SEE B3/AE508
6 GUARDRAIL. SEE A3/AE508 AND A2/AE508.
7 SAFETY GUARDRAIL. SEE DETAIL C4/AE501.
8 DRYER VENT.
9 CONTROL JOINT.
10 EXHAUST FLUE. SEE MECHANICAL DRAWINGS.
11 DOWNSPOUT NOZZLE. SEE PLUMBING DRAWINGS.
12 COPE BRICK @ LINTEL TO CREATE UNIFORM MORTAR JOINT SIZE.

CRSA
649 E. South Temple
Salt Lake City, UT 84102
801.355.5915

MWL
11798 N. Lakeridge Pkwy.
Ashland, VA 23005
804-228-7473

State of Utah
Department of Administrative Services
Division of Facilities Construction & Management
4110 State Office Building
Salt Lake City, Utah 84114
Phone: (801) 538 - 3018
Fax: (801) 538 - 3267

DFCM APPROVAL STAMP

STATE OF UTAH #134096 MEHRDAD SAMIE LICENSED ARCHITECT
04.28.2014
ARCHITECT-ENGINEER STAMP

Unified State Laboratory Module 2
4451 South 2700 West, Taylorsville, UT 84118

DFCM #: 13020300
Project #: B13-024

DATE:	ISSUE TYPE:
APRIL 21, 2014	BID SET
MAY 8, 2015	ADD # 1

CHECKED BY	J. NIELSEN
DRAWN BY	F. PITORE

EXTERIOR ELEVATIONS

AE202
VOLUME 1

C:\Users\fernando\Documents_A_13024_Modli_2013_fernando.rvt
5/8/2015 2:25:14 PM

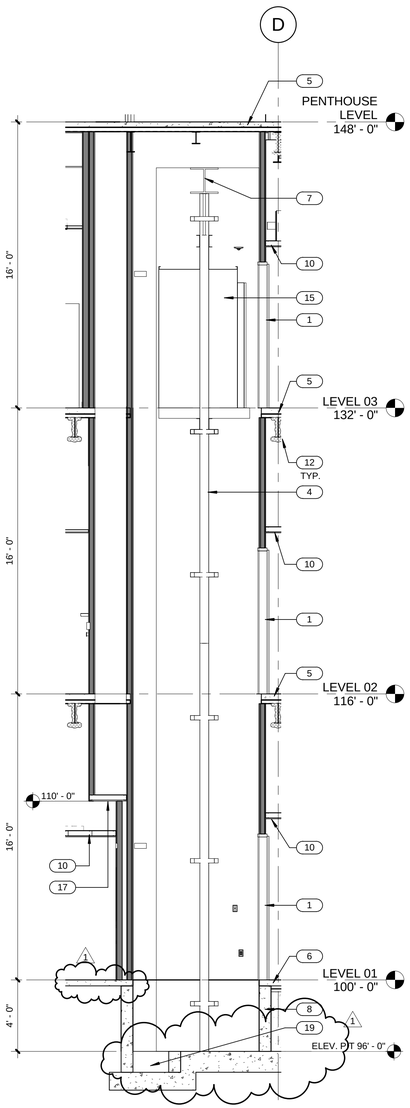

WEST ELEVATOR SECTION (A1 / AE433)
1/4" = 1'-0"

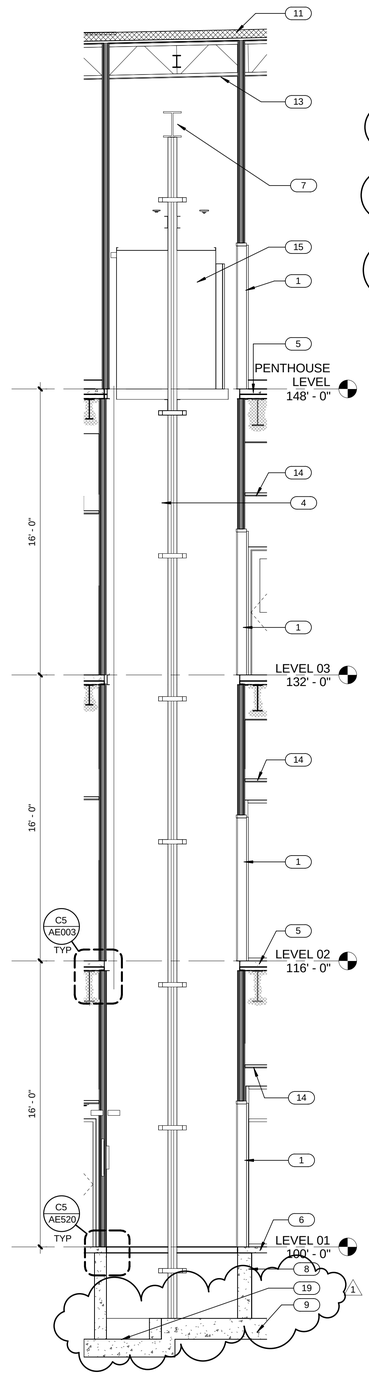

EAST ELEVATOR SECTION (A2 / AE433)
1/4" = 1'-0"

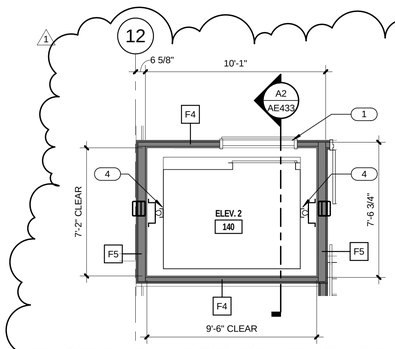

EAST ELEVATOR PENTHOUSE (D3 / AE433)
1/4" = 1'-0"

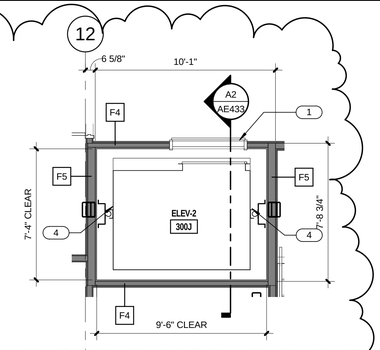

EAST ELEVATOR LEVEL 3 (D4 / AE433)
1/4" = 1'-0"

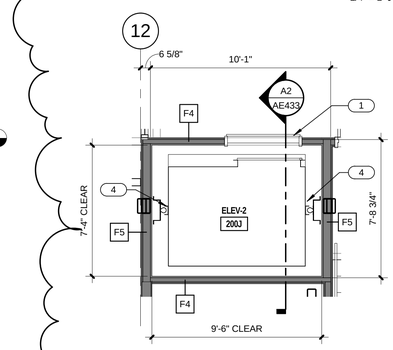

EAST ELEVATOR LEVEL 2 (C3 / AE433)
1/4" = 1'-0"

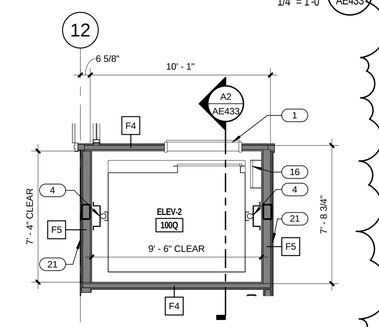

EAST ELEVATOR LEVEL 1 (C4 / AE433)
1/4" = 1'-0"

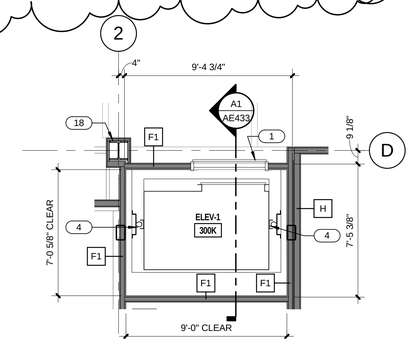

WEST ELEVATOR LEVEL 3 (B4 / AE433)
1/4" = 1'-0"

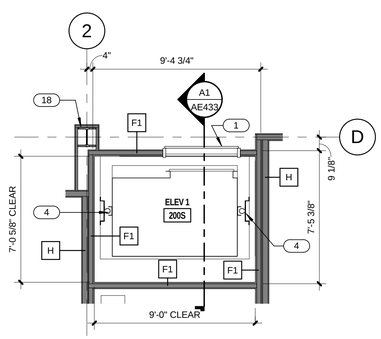

WEST ELEVATOR LEVEL 2 (A3 / AE433)
1/4" = 1'-0"

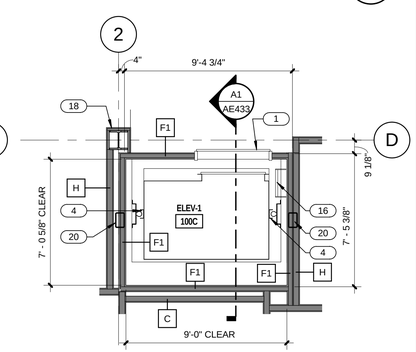

WEST ELEVATOR LEVEL 1 (A4 / AE433)
1/4" = 1'-0"

GENERAL NOTES

- GENERAL CONTRACTOR SHALL FIELD VERIFY ALL CONDITIONS AND SHALL REPORT TO THE ARCHITECT ANY UNKNOWN CONDITIONS, ERRORS OR CONFLICTS IN THE DRAWINGS BEFORE BEGINNING WORK.
- DO NOT SCALE DRAWINGS.
- ITEMS SHOWN BY HIDDEN LINE ARE SPECIFIED BY OTHER SECTIONS.

ALL WALLS TO BE TYPE "A" U.N.O. ON PLAN — A

FIRE EXTINGUISHER — FE

KEYED NOTES

1 ELEVATOR DOOR. SEE SPEC.
2 1-1/2" DIA. PIPE GUARDRAIL. PAINT.
3 HANDRAIL. SEE DETAIL A5/AE550.
4 ELEVATOR GUIDE RAILS PER MANUFACTURER.
5 CONCRETE SLAB ON DECK. SEE STRUCTURAL.
6 30" CLEAR AREA.
7 HOIST BEAM. SEE STRUCTURAL.
8 REINFORCED CONCRETE FOUNDATION WALL. SEE STRUCTURAL.
9 REINFORCED CONCRETE FOOTING. SEE STRUCTURAL.
10 GYP. BD. CEILING. SEE CEILING PLAN.
11 ROOF ASSEMBLY. SEE ROOF TYPES.
12 STEEL BEAM. SEE STRUCTURAL. FIREPROOF PER SPEC.
13 STEEL JOIST. PAINT WHERE EXPOSED. SEE STRUCTURAL.
14 LAY-IN CEILING . SEE CEILING PLANS.
15 ELEVATOR. SEE SPEC.
16 ACCESS LADDER. SEE ELEVATOR SECTION.
17 FIRE RATED BOTTOM OF SHAFT. SEE C5/AE530
18 PIPER WITH 1-1/2" METAL FRAMING. PROVIDE DETAIL SIMILAR TO COLUMN WRAP TYPE B. COORDINATE WITH MECHANICAL.
19 ELEVATOR SUMP PIT.
20 STEEL COLUMN. SEE STRUCTURAL. PAINT WHERE EXPOSED.
21 ADD (1) LAYER OF 5/8" TYPE "X" GYP. BD. ALONG THIS WALL. PAINT AND FINISH AS PER WALL FINISH.

CRSA
649 E. South Temple
Salt Lake City, UT 84102
801.355.5915

MWL
11798 N. Lakeridge Pkwy.
Ashland, VA 23005
804-228-7473

State of Utah
Department of Administrative Services
DFCM
Division of Facilities Construction & Management
4110 State Office Building
Salt Lake City, Utah 84114
Phone: (801) 538 - 3018
Fax: (801) 538 - 3267

DFCM APPROVAL STAMP

STATE OF UTAH #134096 MEHRDAD SAMII LICENSED ARCHITECT
04-28-2014
ARCHITECT-ENGINEER STAMP

Unified State Laboratory Module 2
4451 South 2700 West,
Taylorsville, UT 84118

DFCM #: 13020300
Project #: B13-024

DATE:	ISSUE TYPE:
APRIL 21, 2014	BID SET
MAY 8, 2015	ADD # 1

CHECKED BY	J. NIELSEN
DRAWN BY	F. PITORE

ELEVATOR ENLARGED PLANS & SECTIONS

AE433
VOLUME 1

C:\Users\fernando\Documents_A_13024_Modli_2013_fernando.rvt
5/8/2015 1:20:43 PM

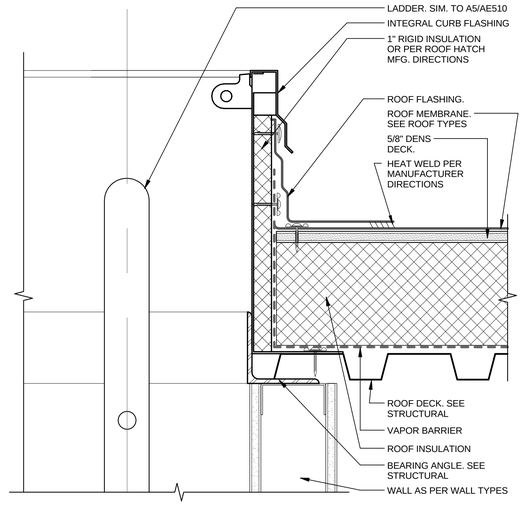

ROOF HATCH DETAIL D2 / AE501
3" = 1'-0"

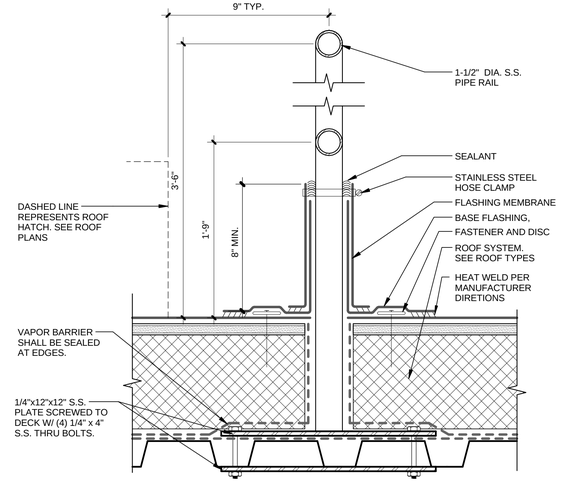

SAFETY GUARDRAIL DETAIL C4 / AE501
3" = 1'-0"

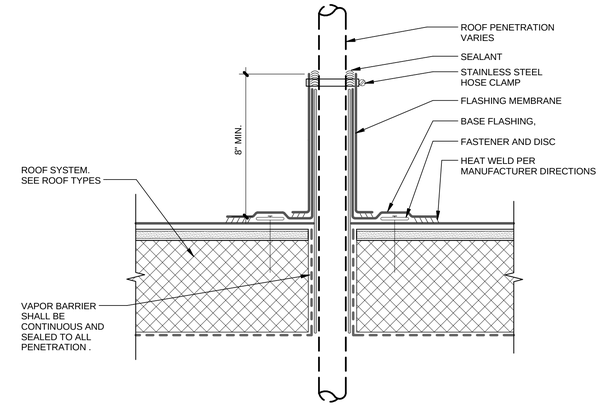

PENETRATION DETAIL C5 / AE501
3" = 1'-0"

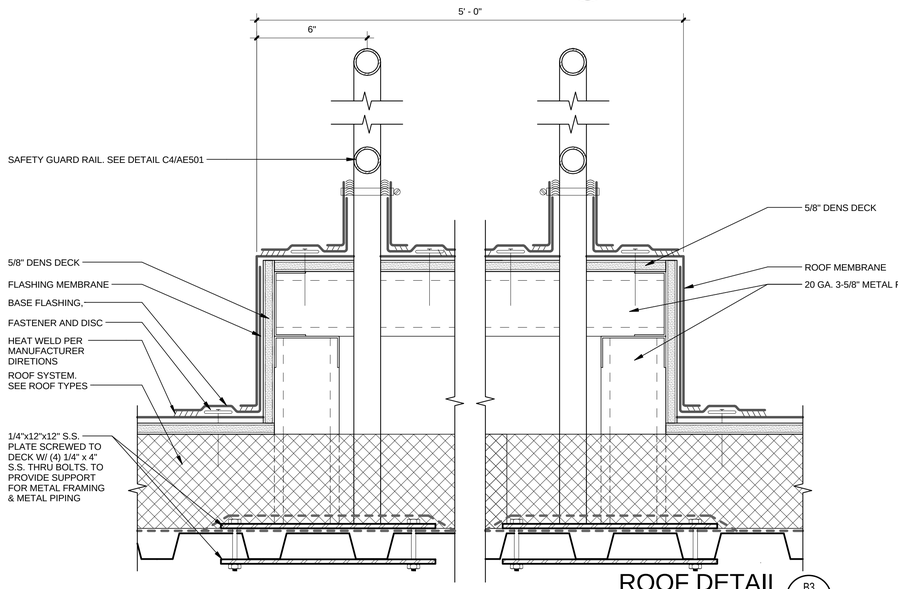

ROOF DETAIL B3 / AE501
3" = 1'-0"

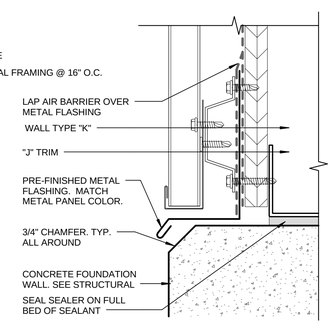

BASE DETAIL B4 / AE501
6" = 1'-0"

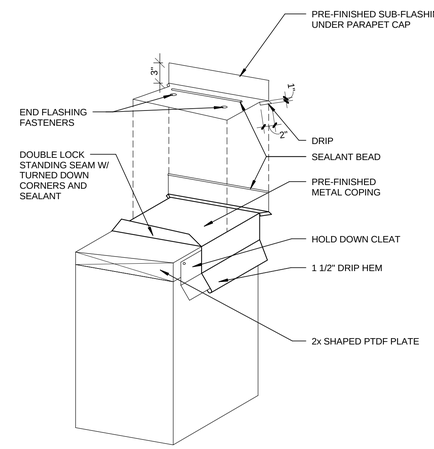

COPING B5 / AE501
N.T.S.

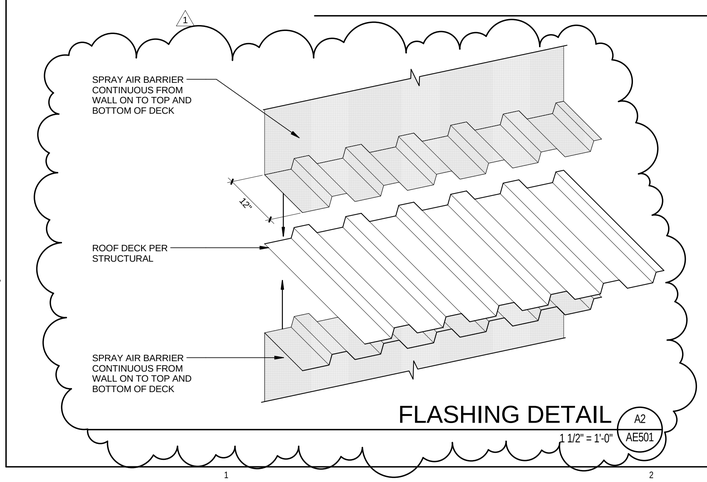

FLASHING DETAIL A2 / AE501
1 1/2" = 1'-0"

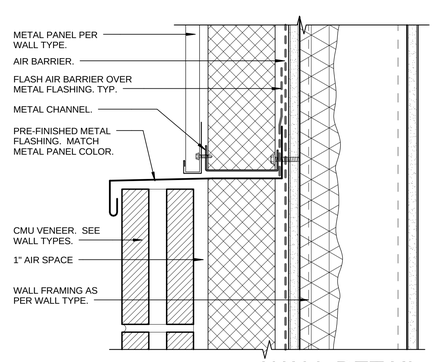

WALL DETAIL A3 / AE501
3" = 1'-0"

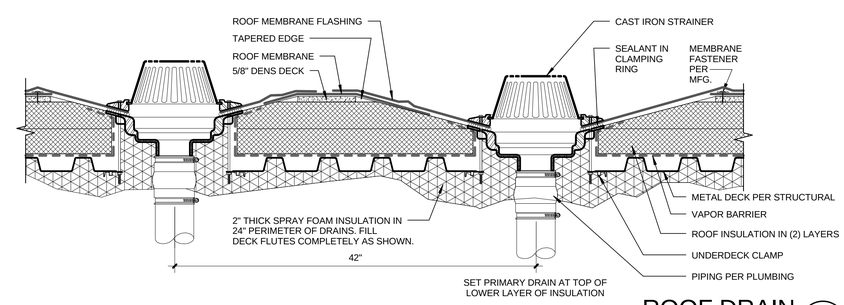

ROOF DRAIN A5 / AE501
1 1/2" = 1'-0"

CRSA
649 E. South Temple
Salt Lake City, UT 84102
801.355.5915

MWL
11798 N. Lakeridge Pkwy.
Ashland, VA 23005
804-228-7473

State of Utah
Department of Administrative Services
Division of Facilities Construction & Management
4110 State Office Building
Salt Lake City, Utah 84114
Phone: (801) 538 - 3018
Fax: (801) 538 - 3267

DFCM APPROVAL STAMP

STATE OF UTAH #134098 MEHRDAD SAMIE LICENSED ARCHITECT
04.28.2014
ARCHITECT-ENGINEER STAMP

Unified State Laboratory Module 2

4451 South 2700 West, Taylorsville, UT 84118

DFCM #: 13020300
Project #: B13-024

DATE:	ISSUE TYPE:
APRIL 21, 2014	BID SET
MAY 8, 2015	ADD # 1
CHECKED BY	J. NIELSEN
DRAWN BY	F. PITORE

DETAILS

AE501
VOLUME 1

C:\Users\fernando\Documents_A_13024_Modl_2013_fernando.rvt
5/8/2015 1:20:59 PM

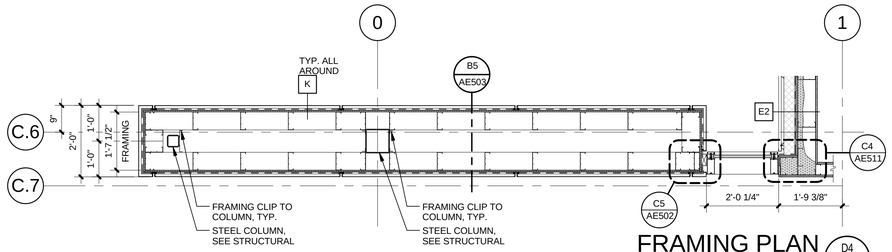

FRAMING PLAN D4 AE503
1/2" = 1'-0"

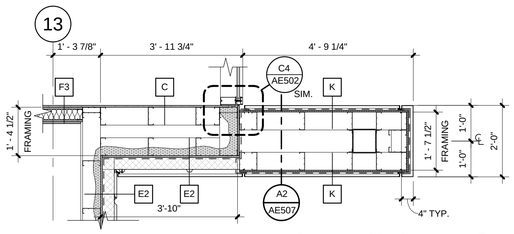

FRAMING PLAN D5 AE503
1/2" = 1'-0"

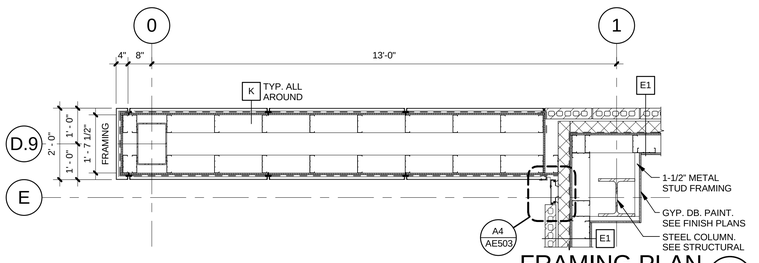

FRAMING PLAN C2 AE503
1/2" = 1'-0"

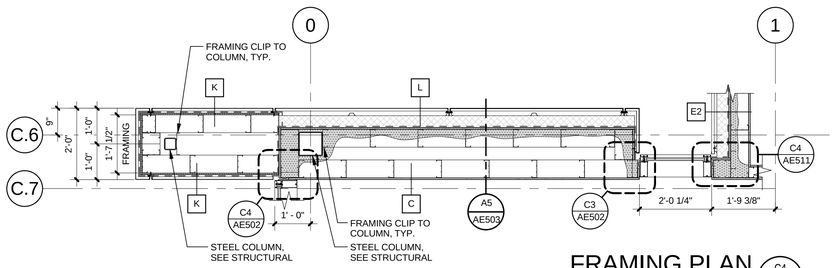

FRAMING PLAN C4 AE503
1/2" = 1'-0"

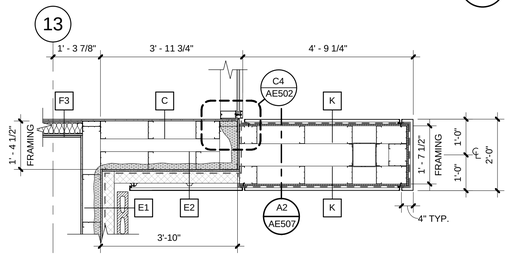

FRAMING PLAN C5 AE503
1/2" = 1'-0"

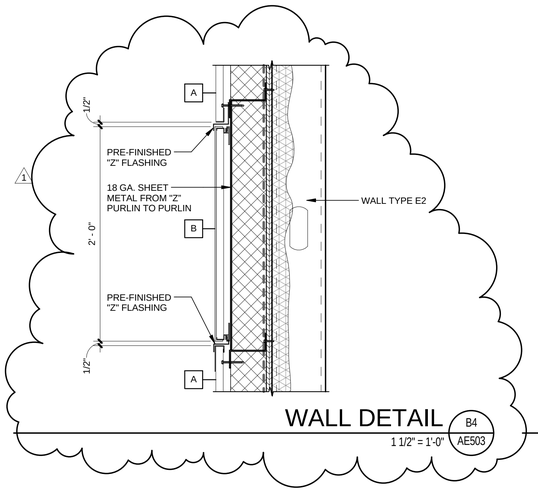

WALL DETAIL B4 AE503
1 1/2" = 1'-0"

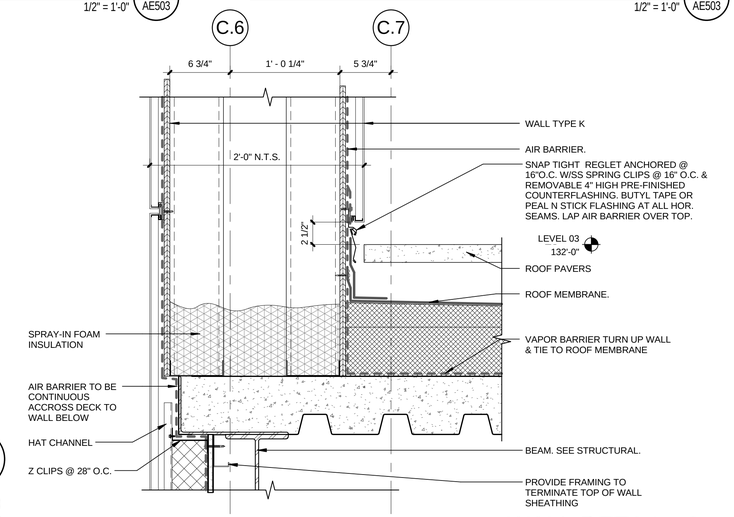

WALL DETAIL B5 AE503
1 1/2" = 1'-0"

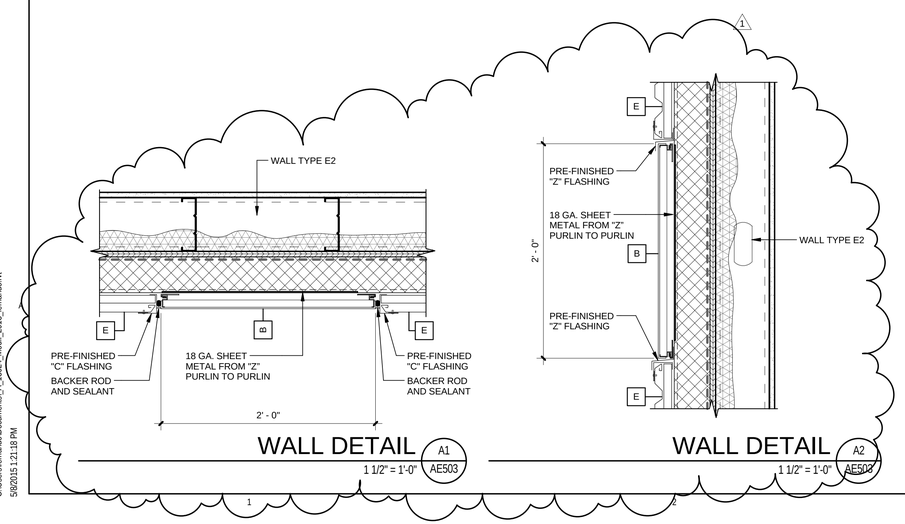

WALL DETAIL A1 AE503
1 1/2" = 1'-0"

WALL DETAIL A2 AE503
1 1/2" = 1'-0"

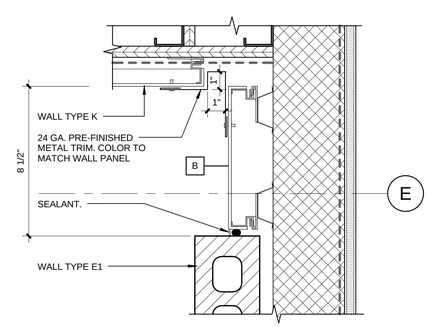

WALL DETAIL A4 AE503
3" = 1'-0"

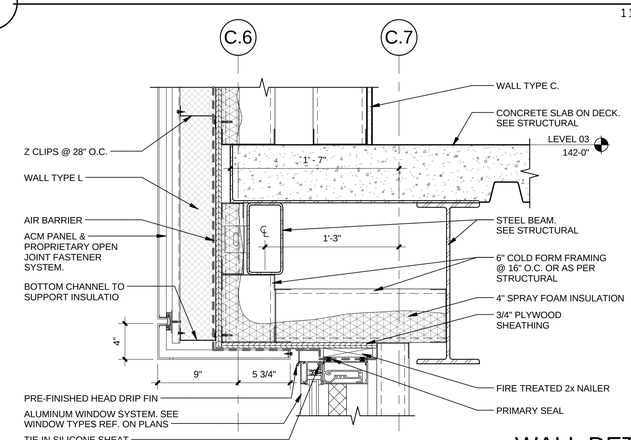

WALL DETAIL A5 AE503
1 1/2" = 1'-0"

CRSA
649 E. South Temple
Salt Lake City, UT 84102
801.355.5915

MWL
11798 N. Lakeridge Pkwy.
Ashland, VA 23005
804-228-7473

State of Utah
Department of Administrative Services
Division of Facilities Construction & Management
4110 State Office Building
Salt Lake City, Utah 84114
Phone: (801) 538 - 3018
Fax: (801) 538 - 3267

DFCM APPROVAL STAMP

STATE OF UTAH #134096 MEHRDAD SAMII LICENSED ARCHITECT
04-28-2014
ARCHITECT-ENGINEER STAMP

Unified State Laboratory Module 2

4451 South 2700 West, Taylorsville, UT 84118

DFCM #: 13020300

Project #: B13-024

DATE:	ISSUE TYPE:
APRIL 21, 2014	BID SET
MAY 8, 2015	ADD # 1

CHECKED BY	Checker
DRAWN BY	F. PITORE

DETAILS

AE503

VOLUME 1

C:\Users\fernando\Documents_A_13024_Modil_2013_fernando.rvt
5/8/2015 1:21:18 PM

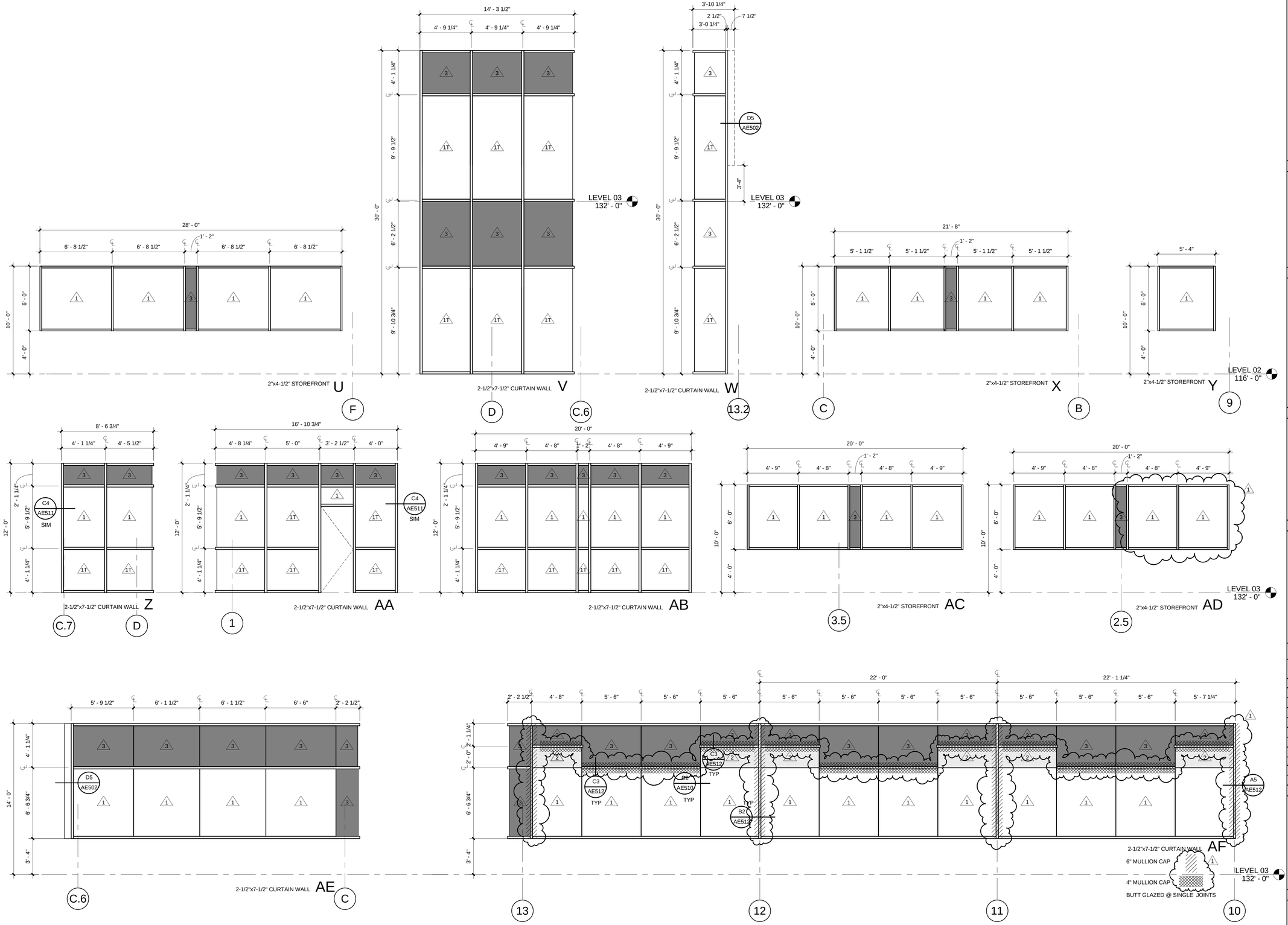

CRSA

649 E. South Temple
Salt Lake City, UT 84102
801.355.5915

M1WL

11798 N. Lakeridge Pkwy.
Ashland, VA 23005
804-228-7473

State of Utah
Department of Administrative Services

Division of Facilities Construction & Management
4110 State Office Building
Salt Lake City, Utah 84114
Phone: (801) 538 - 3018
Fax: (801) 538 - 3267

DFCM APPROVAL STAMP

STATE OF UTAH #134098 MEHRDAD SAMIE LICENSED ARCHITECT
04.28.2014
ARCHITECT-ENGINEER STAMP

Unified State Laboratory Module 2

4451 South 2700 West, Taylorsville, UT 84118

DFCM #: 13020300

Project #: B13-024

DATE:	ISSUE TYPE:
APRIL 21, 2014	BID SET
MAY 8, 2015	ADD # 1

CHECKED BY: J. NIELSEN

DRAWN BY: F. PITORE

WINDOW TYPES

AE606

VOLUME 1

C:\Users\fernando\Documents_A_13024_Mdill_2013_fernando.rvt
5/8/2015 1:21:26 PM

LAB SINK SCHEDULE "LS–x"

MARK	TYPE	MATERIAL	SIZE L x W x H	SERVICES: HOT & COLD H20	SERVICES: FOOT PEDAL	SERVICES: IR	NOTES
LS–1	SINGLE BOWL	EPOXY RESIN	25 x 15 x 5	X		X	
LS–1SS	SINGLE BOWL	ST. STL.	25 x 15 x 5	X		X	
LS–2	SINGLE BOWL	EPOXY RESIN	25 x 15 x 10	X	X		
LS–2SS	SINGLE BOWL	ST. STL.	25 x 15 x 10	X	X		
LS–3	DOUBLE BOWL	EPOXY RESIN	36 x 15 x 10	X	X		
LS–4SS	SINGLE BOWL	ST. STL.	72 x 18 x 6	X	X		
LS–5SS	SINGLE BOWL W/ DRAIN BOARD	ST. STL.	25 x 12 x 5	X	X		
LS–6	CUP SINK	EPOXY RESIN	7.5 x 4.5 x 3.75				DRAIN ONLY

GENERAL LAB SINK NOTES:
1. REFER TO TYPICAL LAB SINK PLAN ON LAB DETAIL SHEETS.
2. REFER TO FLOOR PLANS FOR LOCATIONS OF WATER POLISHERS AND PROVIDE 1/2" DIA. HOLE & TEMP CAP. ADJACENT AS SHOWN ON TYPICAL LAB SINK PLAN.
3. REFER TO FLOOR PLANS FOR LOCATIONS OF DECK MOUNTED DRENCH HOSE EYEWASHES (EW).
4. SS SUFFIX REFERS TO STAINLESS STEEL

FUME HOOD SCHEDULE "FHx–y"

SEE LAB PLANS FOR FUME HOOD AND BIOLOGICAL SAFETY CABINET LOCATIONS

MARK	LINER/WORK SURFACE	SIZE	SASH TYPE/ OPENING	PLUMBING SERVICES (ONE SIDE)	ELECTRICAL SERVICES, (BOTH SIDES)	NOTES
FH4–1	WHITE EPOXY/ RESIN	48" W X 31.25" D	VERTICAL 18" OPNG.	SEE LAB PLANS	DUPLEX POWER, OUTLET, GFI	
FH4–ADA	WHITE EPOXY/ RESIN	48" W X 31.25" D	COMBINATION	SEE LAB PLANS	DUPLEX POWER, OUTLET, GFI	
FH5–1	WHITE EPOXY/ RESIN	60" W X 31.25" D	VERTICAL 18" OPNG.	SEE LAB PLANS	DUPLEX POWER, OUTLET, GFI	
FH5–ADA	WHITE EPOXY/ RESIN	60" W X 31.25" D	COMBINATION	SEE LAB PLANS	DUPLEX POWER, OUTLET, GFI	
FH5–ADA–SS	ST. STL.	60" W X 31.25" D	COMBINATION	SEE LAB PLANS	DUPLEX POWER, OUTLET, GFI	ALL STAINLESS STEEL CONSTRUCTION
FH6–1	WHITE EPOXY/ RESIN	72" W X 31.25" D	VERTICAL 18" OPNG.	SEE LAB PLANS	DUPLEX POWER, OUTLET, GFI	
FH6–2						NOT USED
FH6–3	WHITE EPOXY/ RESIN	72" W X 31.25" D	VERTICAL 18" OPNG.	SEE LAB PLANS	DUPLEX POWER, OUTLET, GFI	1'–6"W X 10"D INTEGRAL EPOXY SINK DEDICATED ACID RESISTANT DIRECT EXHAUST– REFER TO MECHANICAL; CONSTANT VOLUME WITH BYPASS AND DEDICATED EXHAUST
FH6–ADA	WHITE EPOXY/ RESIN	72" W X 31.25" D	COMBINATION	SEE LAB PLANS	DUPLEX POWER, OUTLET, GFI	ADA COMPLIANT FUME HOOD
FH6–ADA–SS	ST. STL.	72" W X 31.25" D	COMBINATION	SEE LAB PLANS	DUPLEX POWER, OUTLET, GFI	ADA COMPLIANT FUME HOOD 26"X12"X5"D INTEGRAL SS SINK
FH8–1	WHITE EPOXY/ RESIN	96" W X 31.25" D	VERTICAL 18" OPNG.	SEE LAB PLANS	DUPLEX POWER, OUTLET, GFI	
FH8–1SS	ST. STL.	96" W X 31.25" D	VERTICAL 18" OPNG.	SEE LAB PLANS	DUPLEX POWER, OUTLET, GFI	INTEGRAL 72"W x 18" X 6"D SINK WITH COVER PLATES COVER PLATES: (2) 24" x 18" PERFORATED SS PLATES (3) 24" X 16" SOLID SS PLATES

BIOLOGICAL SAFETY CABINET SCHEDULE "BSCx–y"

MARK	TYPE	SIZE	CLASS	UTILITY SERVICES
BSC4– A2	A2 (30% THIMBLE EXHAUSTED, 70% RECIRCULATED)	55" W x 34" D 86.5 – 92.5" H	II	(2) PLUGGED PENETRATIONS FOR FUTURE PETCOCKS, DUPLEX POWER OUTLETS MOUNTED INSIDE OF HOOD CAVITY, GFI, RATED FOR 20 AMPS EACH OUTLET. ONLY (1) IF NG NOTED ON PLANS.
BSC6– A2	A2 (30% THIMBLE EXHAUSTED, 70% RECIRCULATED)	55" W x 34" D 86.5 – 92.5" H	II	(2) PLUGGED PENETRATIONS FOR FUTURE PETCOCKS, DUPLEX POWER OUTLETS MOUNTED INSIDE OF HOOD CAVITY, GFI, RATED FOR 20 AMPS EACH OUTLET. ONLY (1) IF NG NOTED ON PLANS.

GENERAL FUME HOOD AND BIOLOGICAL SAFETY CABINET NOTES:
1. AT FUME HOODS NOT SCHEDULED TO RECEIVE BASE CABINETS, SUPPORT HOOD WITH MANUFACTURER'S STANDARD 2" X 2" TUBULAR STEEL TABLE.
2. FUME HOOD AND BIOLOGICAL SAFETY CABINET MANUFACTURERS SHALL ADVISE WHAT SPECIAL STRUCTURE IS REQUIRED, CONCEALED IN WALLS, FOR SEISMIC ANCHORAGE OF FUME HOODS AND BIOLOGICAL SAFETY CABINETS, PER PREVAILING CODES.
3. ADA FUME HOODS SHALL BE ADA COMPLIANT IN APRON DEPTH AND MOUNTING HEIGHT.
4. ALL FUME HOODS SHALL HAVE A PERFORATED SCREEN AT THE BACK BAFFLE AREA. REFER TO THE FUME HOOD SPECIFICATION.
5. REFER TO FUME HOOD SCHEDULE FOR ALL FUME HOOD TYPES & THEIR SERVICES. REFER TO LAB PLANS FOR LOCATIONS OF FUME HOOD TYPES.

LAB MOBILE TABLE SCHEDULE "MTxy"

MARK	SIZE	TOP	NOTES
MT3048	30" W x 48" L	EPOXY RESIN	
MT3060	30" W x 60" L	EPOXY RESIN	
MT3672	36" W x 72" L	EPOXY RESIN	
MT4060–SS	40" W x 60" L	ST. STL.	
MT4072	40" W x 72" L	EPOXY RESIN	
MT4072–SS	40" W x 72" L	ST. STL.	

GENERAL LAB MOBILE TABLE NOTES:
1. PAPER ROLL DISPENSER WHERE SHOWN ON LAB PLANS – PRDx.
2. REFER TO TYPICAL MOBILE TABLE ELEVATION ON LAB DETAILS SHEETS, 1/IL502.
3. REFER TO LAB PLANS FOR SUSPENDED CABINETS.

CART SCHEDULE

MARK	MATERIAL	NOTES
CART	ST. STL	LABORATORY CART – SPEC 116000

LAB COUNTER SCHEDULE

MATERIAL	NOTES
EPOXY RESIN	ALL LABORATORY COUNTERTOPS UNLESS OTHERWISE NOTED
MAPLE	PRT/SHOP 205C (WHERE INDICATED ON LAB PLANS BY KEYNOTE 38)
STAINLESS STEEL	ALL LAB CASEWORK AND COUNTERTOPS IN THE AUTOPSY/MORGUE SUITE WILL BE SS– STAINLESS STEEL

NOTES:
1. REFER TO ARCHITECTURAL FINISH SCHEDULE FOR COLOR OF COUNTER TOPS AND METAL CASEWORK COLOR.

LABORATORY EQUIPMENT & LABORATORY FIXTURES

EQUIP.#	EQUIPMENT ITEM	SPEC. SECTION	OFOI	CFCI	MOUNTING
ESEW1	PULL DOWN EMERGENCY SHOWER/EYEWASH	123450		X	WALL
EW	DRENCH HOSE EYEWASH	123450		X	COUNTER
F1	LAB FREEZER (–30C)	116000	X		FLOOR
F2	LAB FREEZER (UNDERCOUNTER)	116000	X		FLOOR
F3	NOT USED				
F4	LAB FREEZER (FLAMMABLE –20C)	116000	X		FLOOR
GW	LAB GLASSWARE WASHER	116000	X		FLOOR
HG	HYDROGEN GENERATOR	116000		X	COUNTER
LE1	GAS CYLINDER RACK	116000		X	FLOOR/WALL
LE1A	GAS CYLINDER WALL BRACKET	116000		X	WALL
LE2	GAS CYLINDER RACK	116000		X	FLOOR/WALL
LE3	OVERHEAD PHOTO/LIGHT TRACK	114700		X	CEILING
LE4A	NOT USED				
LE4B	ARTICULATING TASK EXHAUST	116000		X	CEILING
LE4C	ARTICULATING TASK EXHAUST	116000		X	CEILING
LE4D	ARTICULATING TASK EXHAUST (LARGE)	116000		X	CEILING/WALL
OHCA	OVERHEAD COMPRESSED AIR REEL	DIV.26		X	CEILING
OHCR–1	RECESSED OVERHEAD CORD REEL	DIV.26		X	CEILING
OHCR–2	SURFACE MOUNTED OVERHEAD CORD REEL	DIV.26		X	CEILING
R1	LAB REFRIGERATOR (4C)	116000	X		FLOOR
R2	LAB REFRIGERATOR/FREEZER (4C/–20C)	116000	X		FLOOR
R3	LAB REFRIGERATOR (UNDERCOUNTER)	116000	X		FLOOR
R4	LAB REFRIGERATOR (FLAMMABLES)	116000	X		FLOOR
R5	DORM REFRIGERATOR	116000	X		FLOOR
R6	DOUBLE SLIDING GLASS DOOR REFRIGERATOR (4C)	116000	X		FLOOR
R7	DOUBLE SLIDING SOLID DOOR REFRIGERATOR (4C)	116000	X		FLOOR
R8	EXISTING FREEZER	OFCI	X		FLOOR
WP	WATER POLISHER (KN #81)	116000		X	FLOOR

AUTOPSY/MORGUE

EQUIP. #	EQUIPMENT ITEM	SPEC. SECTION	OFOI	CFCI	MOUNTING
ME1	BACKDRAFT AUTOPSY STATION	117810		x	FLOOR
ME2A	BODY CARRIER	117810		x	FLOOR
ME2B	STAINLESS STEEL BODY TRAY	117810		x	CARRIER
ME2C	PLASTIC BODY TRAY	117810		x	CARRIER
ME3	BARIATRIC BODY CARRIER WITH ATTACHED SS TRAY	117810		x	FLOOR
ME4	BODY RACKING SYSTEM	130800		x	FLOOR
ME5	RECESSED BODY SCALES W/ DIGITAL READOUT	117810		x	FLOOR/WALL
ME6	FUTURE EVIDENCE DRYING CABINET (DUCTED EXHAUST)	117810	x		FLOOR
ME7	MAIN BODY COOLER	130800		x	FLOOR/ROOF
ME8	DECOMP BODY COOLER	130800		x	FLOOR/ROOF
ME9	DECOMP BODY FREEZER	130800		x	FLOOR/ROOF
ME10	BODY LIFT (RELOCATED)	EXISTING	OFCI		HOIST BEAM
ME11	EVIDENCE DRYING CABINET	NIC	x		FLOOR
ME12	INCUBATOR	NIC	x		COUNTER
ME13	WASHER EXTRACTOR	NIC	x		FLOOR
ME14	COMMERCIAL DRYER	NIC	x		STACKED
ME15	TISSUE PROCESSOR	NIC	x		FLOOR
ME16	EMBEDDING CENTER	NIC	x		COUNTER
ME17	MICROTOME	NIC	x		COUNTER
ME18	DRYING OVEN	NIC	x		COUNTER
ME19	SLIDE STAINER	NIC	x		COUNTER
ME20	SLIDE COVERSLIPPER	NIC	x		COUNTER
ME21	NOT USED				
ME22	NOT USED				
ME23	NOT USED				
ME24	DENTAL X–RAY	NIC	x		WALL
ME25	LODOX STATSCAN	NIC	x		FLOOR/WALL
ME26	NOT USED				
ME27	NOT USED				
ME28	DOCUMENT CAMERA	NIC	x		CEILING
ME29	BODY FORK LIFT	117810		x	FLOOR

FIREARMS/TOOLMARKS (DPS)

EQUIP.#	EQUIPMENT ITEM	SPEC. SECTION	OFOI	CFCI	MOUNTING
FA1	COMPARISON SCOPE	NIC	x		FLOOR
FA2a	IBIS ACQUISITION/CONTROL UNITS	NIC	x		COUNTER
FA2b	IBIS DATA CONCENTRATOR STATION	NIC	x		COUNTER
FA3	BALLISTIC SAFETY CEILING	114900		x	CEILING
FA4	BALLISTIC BAFFLES	114900		x	CEILING
FA5	BALLISTIC RUBBER PANELS	114900		x	WALL
FA6	BULLET TRAP	114900		x	FLOOR
FA7	TARGET TROLLEY	114900		x	BAFFLES
FA8	PROJECTILE RECOVERY TANK	114900	x		FLOOR
FA9	DRILL PRESS	NIC	x		COUNTER
FA10	GRINDER	NIC	x		COUNTER
FA11	COPY STAND	NIC	x		COUNTER
FA12	STEREOSCOPE	NIC	x		COUNTER

CHEMISTRY/TRACE (DPS)

EQUIP.#	EQUIPMENT ITEM	SPEC. SECTION	OFOI	CFCI	MOUNTING
C1	GC–MS W/PYROLYZER	NIC	x		COUNTER
C2	GC–MS	NIC	x		COUNTER
C2A	GC–MS W/ CHEMICAL IONIZATION	NIC	x		COUNTER
C3	FTIR	NIC	x		COUNTER
C4	SEM W/ EDS	NIC	x		FLOOR
C5	MICROSPECTROPHOTOMETER	NIC	x		COUNTER
C6	LIBS SYSTEM	NIC	x		COUNTER
C7	NOT USED	NIC	x		COUNTER
C8	OVEN	NIC	x		COUNTER
C9	OVEN	NIC	x		COUNTER
C10	VACUUM OVEN	NIC	x		COUNTER

FORENSIC BIOLOGY/SEROLOGY (DPS)

EQUIP.#	EQUIPMENT ITEM	SPEC. SECTION	OFOI	CFCI	MOUNTING
B1	THERMAL CYCLER	NIC	X		COUNTER
B2	GENETIC ANALYZER (3500)	NIC	X		COUNTER
B3	REAL TIME PCR 7500	NIC	X		COUNTER
B4	EXTRACTION ROBOT (TECAN)	NIC	X		COUNTER
B5	EXTRACTION ROBOT (MAXWELL)	NIC	X		COUNTER
B6	UV CROSSLINKER	NIC	X		COUNTER
B7	AUTOCLAVE	NIC	X		COUNTER
B8	EXTRACTION WORKSTATION(BIOMEK 3000)	NIC	X		COUNTER
B9	WALK–IN FREEZER	130800		X	FLOOR/ROOF
B10	OVEN	NIC	X		COUNTER
B11	OVEN	NIC	X		COUNTER
B12	INCUBATOR	NIC	X		COUNTER
B13	CENTRIFUGE	NIC	X		COUNTER
B14	UV PASS–THRU	116000		X	WALL

ID/IMPRESSIONS (DPS)

EQUIP.#	EQUIPMENT ITEM	SPEC. SECTION	OFOI	CFCI	MOUNTING
ID1	NINHYDRIN CHAMBER	NIC	X		COUNTER
ID2	POWDER HOOD	NIC	X		FLOOR
ID3	SUPER GLUE CABINET	116000		X	COUNTER
ID4	SUPER GLUE CABINET	NIC	X		FLOOR
ID5	DRYING CHAMBER (32" W)	116000		X	FLOOR
ID6	DRYING CHAMBER (36" W)	NIC	X		FLOOR
ID7	COPY STAND	NIC	X		COUNTER
ID8	OVEN	NIC	X		COUNTER
ID9	DRYING CHAMBER (64" W)	116000		X	FLOOR

BACTERIOLOGY/PATHOGEN LAB (AG & FOOD)

EQUIP.#	EQUIPMENT ITEM	SPEC. SECTION	OFOI	CFCI	MOUNTING
BACTERIOLOGY LAB					
BA1	INCUBATOR	NIC	X		COUNTER
BA2	FLUOROPHOS/FLUOROMETER	NIC	X		COUNTER
BA3	FLUOROPHOS/HEAT BLK	NIC	X		COUNTER
BA4	INCUBATOR	NIC	X		COUNTER
BA5	SOMASCOPE	NIC	X		FLOOR
BA6	LACTOSCOPE	NIC	X		COUNTER
BA7	CRYOSCOPE	NIC	X		COUNTER
BA8	OVEN	NIC	X		COUNTER
BA9	AUTOCLAVE	NIC	X		FLOOR
BA10	HPLC (FUTURE)	NIC	X		COUNTER
BA11	ANAEROBIC CHAMBER (FUTURE)	NIC	X		COUNTER
BA12	SPECTROPHOTOMETER (FUTURE)	NIC	X		COUNTER
PATHOGEN LAB					
P1	INCUBATOR	NIC	X		COUNTER
P2	AUTOCLAVE	NIC	X		COUNTER
P3	BAX PCR	NIC	X		COUNTER
P4	STOMACHER	NIC	X		COUNTER
P5	STOMACHER	NIC	X		COUNTER

CHEMISTRY/PESTICIDES/MEAT (AG & FOOD)

EQUIP.#	EQUIPMENT ITEM	SPEC. SECTION	OFOI	CFCI	MOUNTING
PESTICIDES					
PC1	GC	NIC	X		COUNTER
PC2	GC	NIC	X		COUNTER
PC3	GC–MS	NIC	X		COUNTER
PC4	HPLC	NIC	X		COUNTER
PC5	HPLC	NIC	X		COUNTER
PC6	WATER POLISHER	NIC	X		COUNTER
PC7	FURNACE	NIC	X		COUNTER
PC8	ROTOVAP	NIC	X		COUNTER
PC9	OVEN	NIC	X		COUNTER
PC10	OVEN	NIC	X		FLOOR
PC11	TRIPLE QUAD LCMS (FUTURE)	NIC	X		COUNTER
PC12	GROUND SHAKER	NIC	X		FLOOR
PC13	SPE WORKSTATION	NIC	X		COUNTER
PC14	GC–MS W/HEADSPACE (FUTURE)	NIC	X		COUNTER
PC15	TRIPLE QUAD GC–MS (FUTURE)	NIC	X		COUNTER
PC16	ACCELERATED SOLVENT EXTRACTOR	NIC	X		COUNTER
MEAT					
MT1	KJELDAHL UNIT	NIC	X		COUNTER
MT2	OVEN	NIC	X		COUNTER
MT3	MEAT ANALYZER	NIC	X		COUNTER
MT4	BLIXER	NIC	X		COUNTER
MT5	FURNACE	NIC	X		COUNTER
CHEMISTRY					
CH1	ICP–OES	NIC	X		FLOOR
CH2	ICP–MS	NIC	X		COUNTER
CH3	WATER POLISHER	NIC	X		WALL
CH4	MICROWAVE DIGEST SYSTEM	NIC	X		COUNTER
CH5	NOT USED				
CH5a	FEED GRINDER (40" W)	NIC	X		COUNTER
CH5b	FEED GRINDER (17" W)	NIC	X		COUNTER
CH5c	FEED GRINDER	NIC	X		COUNTER
CH6	FURNACE	NIC	X		COUNTER
CH7	FAT EXTRACTOR	NIC	X		COUNTER
CH8	NOT USED				
CH9	NITROGEN ANALYZER (NEW)	NIC	X		COUNTER
CH10	SALT TITRATOR	NIC	X		COUNTER
CH11	OVEN	NIC	X		COUNTER
CH12	IC ANALYZER	NIC	X		COUNTER
CH13	EXIST. LABCONCO LAB GLASSWARE WASHER	NIC	X		FLOOR
CH14	FIBER ANALYZER– WITH WATER HEATER	NIC	X		COUNTER
CH15	OVEN	NIC	X		COUNTER
CH16	FEED ANALYZER (FUTURE)	NIC	X		COUNTER

CRIME SCENE

EQUIP.#	EQUIPMENT ITEM	SPEC. SECTION	OFOI	CFCI	MOUNTING
CS1	SUPERGLUE CABINET (CA9000D)	116000		X	FLOOR

CRSA
649 E. South Temple
Salt Lake City, UT 84102
801.355.5915

MWL
11798 N. Lakeridge Pkwy.
Ashland, VA 23005
804-228-7473

State of Utah
Department of Administrative Services
Division of Facilities Construction & Management
4110 State Office Building
Salt Lake City, Utah 84114
Phone: (801) 538 - 3018
Fax: (801) 538 - 3267

DFCM APPROVAL STAMP

STATE OF UTAH #134098 MEHRDAD SAMIE LICENSED ARCHITECT
04.28.2014
ARCHITECT-ENGINEER STAMP

Unified State Laboratory Module 2
4501 South 2700 West,
Taylorsville, UT 84118

KEY PLAN

DFCM #: 13020300
Project #: B13-024

DATE:	ISSUE TYPE:
APRIL 21, 2014	BID SET
MAY 8, 2015	ADD # 1

CHECKED BY: B. CARVER
DRAWN BY: B. WARRREN

LAB SCHEDULES

1

IL001
VOLUME 1

LAB ABBREVIATIONS

ACDx	ACID STORAGE CABINET – EXHAUSTED (x DENOTES CABINET WIDTH)
AFF	ABOVE FINISHED FLOOR
AR5	ARGON FITTING (99.999% PURITY)
BSCx–y	BIOLOGICAL SAFETY CABINET (x DENOTES HOOD WIDTH, y – REFER TO BIOLOGICAL SAFETY CABINET SCHEDULE)
Bx–y	BASE FIXED FLOOR MOUNTED CABINETRY (x DENOTES CABINET WIDTH, y DENOTES CABINET TYPE)
Bx–ySS	SAME AS Bx–y, EXCEPT ALL STAINLESS STEEL CONSTRUCTION
CA	COMPRESSED AIR (MEDICAL GRADE COMPRESSED AIR FITTING)
CARTx	LAB CART – (x DENOTES TYPE)
CFCI	CONTRACTOR FURNISHED, CONTRACTOR INSTALLED
CS	CUP SINK
CSCx	FLAMMABLE CHEMICAL STORAGE CABINET (x DENOTES CABINET WIDTH)
CT	COUNTERTOP
CW	COLD WATER
DBx–y	BASE FIXED DRAWER. FLOOR MOUNTED (x DENOTES CABINET WIDTH & y DENOTES CABINET TYPE)
DBx–ySS	SAME AS DBx–y, EXCEPT ALL STAINLESS STEEL CONSTRUCTION
ELX–y	EVIDENCE LOCKER (x DENOTES CABINET WIDTH; y DENOTES CABINET TYPE)
ER	EPOXY RESIN
ESEW1	RECESSED, SWING DOWN COMBINATION EMERGENCY EYEWASH & SHOWER UNIT
EW	ADA COMPLIANT – DRENCH HOSE EYEWASH FIXTURE – DECK MOUNTED
FFD	FLUSHING FLOOR DRAIN
FHx–y	FUME HOOD (x DENOTES HOOD WIDTH, y DENOTES TYPE REFER TO FUME HOOD SCHEDULE)
H5	HYDROGEN FITTING (99.999% PURITY)
HCW	HOT & COLD WATER
HE5	HELIUM FITTING (99.999% PURITY)
HW	HOT WATER
IR	INFRARED
KB/MT	KEYBOARD WITH SLIDING MOUSE TRAY
KS–SS	SAME AS KS, BUT ALL STAINLESS STEEL CONSTRUCTION
KSDx	KNEE SPACE W/ DRAWER AND STANDARD APRON, (x DENOTES WIDTH)
KSDx–SS	SAME AS KSDx, BUT ALL STAINLESS STEEL CONSTRUCTION
KSP–ML	KNEE SPACE W/ PENCIL DRAWER – MAXLAB
KSWBx	KNEE SPACE WITH WRITING BOARD (x DENOTES WIDTH)
KSx	KNEE SPACE (x DENOTES WIDTH)
L	LOCKING CABINET
LA5	LAB AIR FITTING (SCRUBBED MEDICAL GRADE COMPRESSED AIR – 99.999% PURITY)
LN	LIQUID NITROGEN
LSx	LAB SINK (x DENOTES SINK TYPE. REFER TO LAB SINK SCHEDULE)
MB	MARKER BOARD W/ HARDWOOD FRAME
MB/TB	MARKER BOARD / TACK BOARD W/ HARDWOOD FRAME
MCx–y	MOBILE CABINET (x DENOTES WIDTH AND y DENOTES TYPE)
MGU	MOBILE GUN UNIT
MTCxy	MOBILE TABLE CABINET (x DENOTES WIDTH AND y DENOTES TYPE)
MTxy	MOBILE TABLE (x INDICATES WIDTH AND y INDICATES LENGTH)
MTxy–SS	SAME AS MTx–y, BUT ALL STAILNESS STEEL CONSTRUCTION
N5	NITROGEN FITTING (99.999% PURITY)
NG	NATURAL GAS FITTING
NIC	NOT IN CONTRACT
OFCI	OWNER FURNISHED, CONTRACTOR INSTALLED
OFOI	OWNER FURNISHED, OWNER INSTALLED
OHCA	OVERHEAD CORD REEL (COMPRESSED AIR), BY DIV. 22
OHCR1	RECESSED OVERHEAD CORD REEL (POWER), BY DIV. 26
OHCR2	SURFACE MOUNTED OVERHEAD CORD REEL (POWER), BY DIV. 26
OHCW	OVERHEAD CORD REEL (COLD WATER), BY DIV. 22
PRDx	PAPER ROLL DISPENSER (x DENOTES WIDTH)
PTD	PAPER TOWEL DISPENSER (SURFACE MOUNTED)
PWBx	PULLOUT WRITING BOARD (x DENOTES WIDTH)
Px	DECK MOUNTED MULTIPLEX PEDESTAL OUTLET (x DENOTES NUMBER OF OUTLETS IN HOUSING)
RDx	ROLL DISPENSER WITHOUT PAPER (x DENOTES WIDTH)
RSx	WALL SHELF W/ ROLLOUT SHELVING (x DENOTES CABINET WIDTH)
RSx–y	REAGENT SHELF (x DENOTES LENGTH; y DENOTES TYPE)
SB–x	SINK BASE FIXED FLOOR MOUNTED CABINETRY (x DENOTES CABINET WIDTH)
SB–xSS	SAME AS SB–x EXCEPT ALL STAINLESS STEEL CONSTRUCTION
SBx	ANGLE SUPPORTED BRACKET AND KNEE SPACE
SBx–ADA	SINK BASE FIXED FLOOR MOUNTED CABINETRY (x DENOTES CABINET WIDTH) – ADA COMPLIANT
SHx–y	STAINLESS STEEL WIRE SHELVING (x DENOTES WIDTH, y DENOTES TYPE)
SP5	SPARE (99.999% PURITY)
ST.STL or SS	STAINLESS STEEL
TCx–y	TALL CABINET (x DENOTES CABINET WIDTH; y DENOTES CABINET TYPE)
TCx–ySS	SAME AS TCx–y, EXCEPT ALL STAINLESS STEEL CONSTRUCTION
TSx–y	TALL SHELF (x DENOTES CABINET WIDTH; y DENOTES CABINET TYPE)
TSx–ySS	SAME AS TSx–y, EXCEPT ALL STAINLESS STEEL CONSTRUCTION
TYP	TYPICAL
TYPE I	TYPE I PURIFIED WATER LOCATION (WATER POLISHER BY DIV. 22), 18 MEGAOHM
TYPE III	TYPE III PURIFIED WATER LOCATION (WATER POLISHER BY DIV. 22), 1 MEGAOHM
UHP	ULTRA HIGH PURITY
UNO	UNLESS NOTED OTHERWISE
VAC	VACUUM
WCx–y	WALL CABINET (x DENOTES CABINET WIDTH, y DENOTES CABINET TYPE)
WCx–ySS	SAME AS WCx–y, EXCEPT ALL STAINLESS STEEL CONSTRUCTION
WSR–x	WALL SHELF W/ ROLLOUT SHELVING (x DENOTES CABINET WIDTH)
WSx–y	WALL SHELF (x DENOTES CABINET WIDTH; y DENOTES CABINET TYPE)
WSx–YSS	SAME AS WSx–y, EXCEPT ALL STAINLESS STEEL CONSTRUCTION
WTxy	WORKSTATION TABLE (x DENOTES DEPTH, y DENOTES LENGTH)

LABORATORY CASEWORK GENERAL NOTES

1. CABINETS & COUNTERS
   - A. ALL SINKS SHALL BE CENTERED IN THEIR CABINETS UNLESS OTHERWISE SHOWN ON DRAWINGS.
   - B. PROVIDE REMOVABLE BACK ACCESS PANELS AT ALL CABINETS AND KNEE SPACES TO PROVIDE ACCESSIBILITY TO UTILITY CHASES BEHIND CABINETS.
   - C. CASEWORK MANUFACTURER AND INSTALLER SHALL PREPARE ALL LAB CASEWORK FOR SPECIAL APPLICATIONS, SUCH AS PRE DRILLING FOR INSTALLATION OF HANDS FREE DEVICES, CUTS IN BACKSPLASH AND COUNTERS FOR EXHAUST GRILLES, TUBING FROM DUCT PENETRATIONS, TASK EXHAUST UNITS, PURIFIED WATER COMPONENTS, WIRING, ETC.
   - D. ALL LABORATORY COUNTERTOPS AND BACKSPLASHES SHALL BE EPOXY RESIN, EXCEPT WHERE INDICATED OTHERWISE. COLOR SHALL BE SELECTED BY ARCHITECT FROM MANUFACTURER'S STANDARD LINE OF COLORS. ALL BACKSPLASHES SHALL MATCH COUNTERTOPS IN MATERIAL AND COLOR. BACK SPLASHES SHALL EXTEND UP TO THE UNDERSIDE OF THE COMPARTMENT RACEWAY.
   - E. ALL COUNTERTOP HEIGHTS SHALL BE 36" AFF UNLESS OTHERWISE NOTED.
   - F. ALL REAGENT LEDGES SHALL MATCH ADJACENT COUNTER TOPS.
   - G. PROVIDE REMOVABLE CLOSURE PANELS AT ENDS OF UTILITY CHASES AT KNEE SPACES, PENINSULAS, ISLANDS, ETC. EXCEPT WHERE NOTED OTHERWISE.
   - H. ALL SINGLE FIXED COUNTERTOPS AT FIXED CASEWORK ARE 30" DEEP UNLESS NOTED OTHERWISE.
   - I. PROVIDE HANGING FILE HARDWARE AT ALL FILE CABINETS.
   - J. PROVIDE LOCK HARDWARE ALL DRAWERS AND DOORS WHERE INDICATED ON LAB PLANS – (L).
   - K. PROVIDE SEISMIC LIPS ON ALL OPEN SHELVING, REAGENT LEDGES, BOOKSHELVES, ETC.
   - L. ALL KNEE SPACES AND WORK U'S SHALL BE CONSTRUCTED WITHOUT VERTICAL LEGS TO ENSURE FULL USE OF THE KNEE SPACES. CONSTRUCT THIS CASEWORK WITH SPANNING APRON PANELS WHICH EITHER SPAN FROM CABINET TO CABINET, CABINETRY TO WALL OR WALL TO WALL. PROVIDE BRACE UNDER COUNTER AS REQUIRED TO SUPPORT COUNTER SYSTEMS. IN NO CASE WILL THE BRACE SUPPORT BE PERMITTED WITHIN 14" OF THE LEADING EDGE OF THE COUNTER.
   - M. CABINET DOOR WIDTHS: SINGLE WIDTH DOORS LESS THEN 48" IN HEIGHT, SHALL NOT EXCEED 24". ALL 24" WIDTH DOORS SHALL BE 1" THICK CONSTRUCTION.
   - N. REFER TO SINK SCHEDULE ON SHEET IL001 FOR ALL SINK TYPES & THEIR SERVICES. REFER TO LAB PLANS FOR LOCATIONS OF SINK TYPES.
   - O. REFER TO FUME HOOD SCHEDULE ON SHEET IL001 FOR ALL FUME HOOD TYPES & THEIR SERVICES. REFER TO LAB PLANS FOR LOCATIONS OF FUME HOOD TYPES.
2. COORDINATION
   - A. ALL DIMENSIONS ARE NOMINAL. SPECIFIC DIMENSIONS MAY VARY AMONG DIFFERENT CASEWORK MANUFACTURERS.
   - B. ALL DIMENSIONS ARE TYPICAL UNLESS OTHERWISE NOTED ON DRAWINGS.
   - C. VERIFY ALL DIMENSIONS IN FIELD BEFORE CASEWORK SHOP DRAWING PROCESS BEGINS.
   - D. REFER TO DIVISION 22 & PLUMBING DRAWINGS FOR ENTIRE PURIFIED WATER SYSTEM. DIVISION 123450 SHALL FURNISH THE PURIFIED WATER FITTINGS IN ORIGINAL UNOPENED PACKAGES FOR INSTALLATION BY PURIFIED WATER CONTRACTOR. COMPONENTS PROVIDED BY DIVISION 22.
3. FLOOR TO CABINET TRANSITIONS, EXCEPT WHERE NOTED OTHERWISE
   - A. PROVIDE VINYL BASE AT TOE SPACE AT ALL FIXED CASEWORK.
   - B. CONTRACTOR SHALL PROVIDE SUITABLE PROTECTION OF ALL FINISHED FLOORING WORK.
   - C. PROVIDE BLOCKING AS REQUIRED FOR SUPPORT OF BASE, WHERE GAP BETWEEN FLOOR AND CABINET IS MORE THAN 3/4".
4. CABINET TO WALL TRANSITIONS
   - A. PROVIDE CONTINUOUS BLOCKING AT ALL WALL LOCATIONS WHERE THERE IS LAB CASEWORK AND ANY AND ALL WALL MOUNTED ACCESSORIES, INCLUDING WALL MOUNTED EQUIPMENT BY OTHERS.
   - B. PROVIDE SURFACE MOUNTED PAPER TOWEL DISPENSERS AT ALL LAB SINKS. LOCATE ALL EPOXY DRYING RACKS TO AVOID CONFLICT WITH DECK MOUNTED EYE WASH UNITS.
5. FUME HOODS
   - A. AT FUME HOODS NOT SCHEDULED TO RECEIVE BASE CABINETS, SUPPORT HOOD WITH MANUFACTURERS STANDARD 2" X 2" TUBULAR STEEL TABLE.
   - B. FUME HOOD AND BIOLOGICAL SAFETY CABINET MANUFACTURERS SHALL ADVISE WHAT SPECIAL STRUCTURE IS REQUIRED, CONCEALED IN WALLS, FOR SEISMIC ANCHORAGE OF FUME HOODS AND BIOLOGICAL SAFETY CABINETS, PER PREVAILING CODES.
   - C. ADA FUME HOODS SHALL BE ADA COMPLIANT IN APRON DEPTH, AND MOUNTING HEIGHT.
   - D. ALL FUME HOODS SHALL HAVE A PERFORATED SCREEN AT THE BACK BAFFLE AREA. REFER TO FUME HOOD SPECIFICATION.
   - E. REFER TO FUME HOOD SCHEDULE ON SHEET IL001 FOR ALL FUME HOOD TYPES & THEIR SERVICES. REFER TO LAB PLANS FOR FUME HOOD LOCATIONS.
6. SIGNAGE
   - A. PROVIDE AND INSTALL ALL NECESSARY AND REQUIRED SIGNAGE TO IDENTIFY AND LOCATE EMERGENCY EYEWASH AND SHOWER UNITS AS REQUIRED BY THE FEDERAL OCCUPATIONAL SAFETY AND HEALTH ADMINISTRATION.
   - B. SOLVENT STORAGE AND ACID CABINETS: PROVIDE LABEL IN ACCORDANCE WITH SPECIFICATIONS "FLAMMABLE KEEP AWAY" AND "ACID STORAGE".

LAB FLOOR PLAN SYMBOL LEGEND

ROOM NAME 101	ROOM NAME AND NUMBER
(15)	KEYNOTE NUMBER
(EW)	DECK MOUNTED DRENCH HOSE EYEWASH
(X)	COUNTERTOP HEIGHT IF DIFFERENT THAN 36" AFF
(XX)	EQUIPMENT NUMBER
-o	ULTRA HIGH PURITY LAB GAS FITTING (1 VALVE)
FD	FLOOR DRAIN
FFD	FLUSHING FLOOR DRAIN
HD	HUB DRAIN
(L)	ALL DOORS AND DRAWERS TO BE LOCKING
(M)	CONNECT MONITOR TO BUILDING MONITORING SYSTEM

CRSA
649 E. South Temple
Salt Lake City, UT 84102
801.355.5915

MWL
11798 N. Lakeridge Pkwy.
Ashland, VA 23005
804-228-7473

State of Utah
Department of Administrative Services
Division of Facilities Construction & Management
4110 State Office Building
Salt Lake City, Utah 84114
Phone: (801) 538 - 3018
Fax: (801) 538 - 3267

DFCM APPROVAL STAMP

STATE OF UTAH #134098 MEHRDAD SAMII LICENSED ARCHITECT
04.28.2014

ARCHITECT-ENGINEER STAMP

Unified State Laboratory Module 2
4501 South 2700 West,
Taylorsville, UT 84118

KEY PLAN

DFCM #: 13020300

Project #: B13-024

DATE:	ISSUE TYPE:
APRIL 21, 2014	BID SET
MAY 8, 2015	ADD # 1

CHECKED BY	B. CARVER
DRAWN BY	B. WARRREN

LAB CASEWORK LEGEND & GENERAL NOTES

1

IL002

VOLUME 1

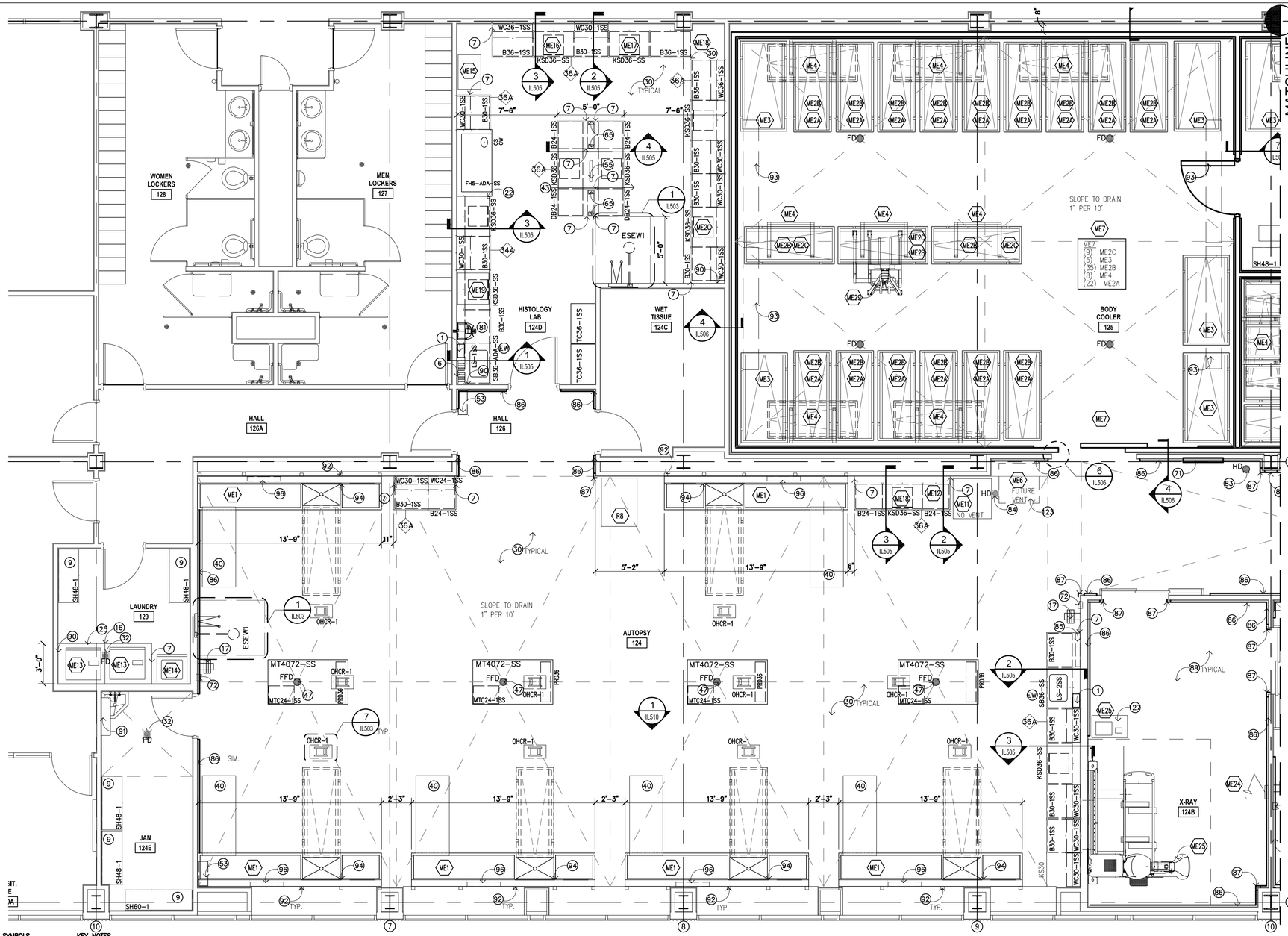

KEY SYMBOLS

- (L) LOCKING
- (M) MONITOR TO BMS
- (EW) DECK MOUNTED DRENCH HOSE EYEWASH FIXTURE
- (CA) COMPRESSED AIR
- (XXX) MARINE EDGE COUNTER ELEVATION IN INCHES
- (XX) NON-MARINE EDGE COUNTER ELEVATION IN INCHES
- (X) KEY NOTES
- (XX) EQUIPMENT
- XXX ROOM NUMBERS

KEY NOTES

1. PAPER TOWEL DISPENSER– SPEC. 116000
2. COAT HOOK STRIP MOUNTED @54" AFF–SPEC 116000 MOUNT SINGLE HOOK @ 48" CENTERED BELOW HOOK STRIP
3. SAFETY SUPPLY CABINET, REFER TO DETAIL 7/IL505 SPEC 116000
4. 1" DIA INLET PORT FOR HYDROGEN GENERATOR
5. OPEN TO FINISH WALL SURFACE
6. EPOXY DRYING RACK – 18"x36" – SPEC 123450
7. FILLER PANEL – MATCH CASEWORK MATERIAL REFER TO 4/IL510 FOR AUTOPSY END FILLER PANEL CONDITION
8. OMIT FRONT AND BACK APRON FOR 34" HIGH UNDER COUNTER EQUIPMENT.
9. SS SHELVING–SPEC 116000
10. 2 1/2" CORD GROMMET–SPEC 123450
11. CONTROL PANEL FOR FA7 (TARGET TROLLEY)
12. 2'X4' STAINLESS STEEL FOLD DOWN SURFACE – REFER TO DETAIL 8/IL507
13. COUNTERTOP MOUNTED COMPRESSED AIR (CA) TURRET
14. COLD WATER HOSE BIB @54" AFF– BY DIV. 22
15. HIGH DENSITY SHELVING– BY DIV. 10
16. KSSF SUPPORT FRAME– REFER TO DETAIL 9/IL500
17. HOT & COLD MIXING STATION–BY DIV. 22 (W/ 30' OF HOSE U.O.N)
18. MOBILE LIFT PARK
19. UTILITY SINK– BY DIV. 22
20. UNDER COUNTER KNEE WALL SUPPORT –REFER TO ARCHITECTURAL
21. SPILL CART–SPEC 116000
22. SUPPORT LEG–BY DIV. 12
23. COAT RACK & SHELF–SPEC 116000
24. WALL MOUNTED PAPER ROLL DISPENSER WITH PLASTIC LAMINATE COVERED PLYWOOD BACKBOARD. 36"HX12"H MOUNTED AT 48" AFF TO BOTTOM.
25. DOUBLE KSSF– REFER TO DETAIL 9/IL502
26. ELEVATION TRANSITION POINT
27. MILLWORK–BY DIV. 6
28. FORMALIN SPIGOT–SPEC 117810
29. UNDERCOUNTER TYPE I WATER POLISHER–BY DIV. 22
30. ALL STAINLESS STEEL CASEWORK IN AUTOPSY SUITES WILL HAVE MARINE EDGE COUNTER TOPS.
31. GAS MANIFOLD @66" A.F.F. (BOTTOM) –BY DIV. 22
32. FLOOR DRAIN– BY DIV. 22
33. DISSECTION TABLE SHELF BY MFR
34. STAINLESS STEEL SCRUB SINK– BY DIV. 22
35. LEVEL 4 BULLET RESISTANT DOOR/FRAME–SPEC 083950
36. 'IN USE' LIGHT–DETAIL–1/IL507–BY DIV. 26
37. PUMP CONTROL FOR FORMALIN DISPENSER
38. MAPLE COUNTER–2" THICK W/ 3/4" X 3 1/2" MAPLE BACK SPLASH W/ 4" LEADING EDGE OVERHANG– SPEC 123450
39. 8" DIA. EXHAUST DUCT FROM PROJECTILE RECOVERY TANK. DIV. 23 TO CONNECT EXHAUST
40. MOBILE DISSECTING WING–SPEC 117810
41. WALL MOUNTED LONG GUN RACK – REFER TO 7/IL507
42. PAINTED 3" NUMBER AND ARROW WHITE PAINT STENCILED ON RUBBER PANELS AT 1 YARD INCREMENTS MEASURED FROM THE ZERO POINT OF THE FIRING LINE. ACCURACY REQUIRED WITHIN 1/16".
43. OPEN ALL OF THE WAY THROUGH
44. GAS ANNUNCIATOR PANEL– BY DIV. 22
45. FORMALIN CONTAINER AND DISPENSING PUMP ON 18"D SHELF –SPEC 117810
46. PAINTED FIRING LINE– REFER TO DETAIL 3/IL507
47. FLUSHING FLOOR DRAIN–BY DIV. 22
48. CONTROLS FOR RANGE AIR HANDLING SYSTEM– DIV. 23
49. 36"L X 12" W X 1" THICK MAPLE WOOD SHELF MOUNT @ 48" AFF–SPEC 123450
50. CW CONNECTION @ 48" A.F.F.–REFER TO PLUMB. VERIFY LOCATION BASED ON APPROVED SHOP DRAWINGS OF PRT
51. MANUAL OPERATED BLACKOUT SHADE–SPEC 122413
52. LOW ELEVATION EXHAUST– REFER TO MECHANICAL
53. BUG ZAPPER MOUNTED @ +84" A.F.F.–BY DIV 26 –SPEC 116000
54. HAMPER– NIC
55. 2–1/2" X 18" CORD SLOT
56. EXHAUST VENTS BY DISSECTING STATION MFR. (VERIFY 8"X24") –COORDINATE DUCTWORK WITH DIV. 23
57. ACID VENT PIPE– REFER TO DETAIL 2/IL500 AND MECHANICAL
58. ADJUSTABLE TOOL RACK–SPEC 114900 REFER TO DETAIL 5/IL507
59. 12"X12"X12" FLOOR SINK–BY DIV. 22
60. PRESSURE DIFFERENTIAL INDICATOR @ 54" AFF– BY DIV. 23
61. U.L. 4 BULLET RESISTANT WINDOW & FRAME– SPEC 085653
62. DIRECT CONNECT EXHAUST– BY DIV. 23
63. DIGITAL READOUT FOR SCALE–SPEC 117810
64. ACID VENT DUCT– REFER TO TACDx ELEVATION ON IL004– BY DIV. 23
65. BELOW COUNTER RECEPTACLE RECESSED INTO SERVICE CLOSURE PANEL– REFER TO ELECTRICAL DRAWINGS.
66. TRENCH DRAIN– BY DIV. 22
67. USER CONTROLLED AIR FLOW SWITCH–BY DIV. 23
68. BULLET TRAP/RANGE SIGN MOUNTED AT 60" AFF TO BOTTOM–SPEC. 114900
69. PRT SIGN MOUNTED AT 60" AFF TO BOTTOM. –SPEC. 114900
70. WALL MOUNTED FLAT PANEL MONITOR–BY DIV. 27
71. COOLER CONTROL PANEL
72. IN–WALL FLUSH VALVE FOR FLUSHING FLOOR DRAINS – BY DIV. 22
73. EXISTING AMMO STORAGE SHELVING SYSTEM TO BE RELOCATED TO NEW FACILITY BY CONTRACTOR
74. BACKDRAFT EXHAUST GRILLE– BY DIV. 23 REFER TO MECH. FOR SIZE, MOUNT ABOVE COUNTERTOP BACKSPLASH
75. ADA COMPLIANT S.S. SINK–BY DIV. 22
76. REMOVABLE EVIDENCE RACK MOUNTED TO MOBILE TABLE–REFER TO DETAIL 2/IL502–SPEC 123450
77. UMBILICAL SERVICE CHASE–SPEC 123450
78. DIRECT CONNECT PRT TO CW
79. COMPRESSED AIR– BY DIV. 23
80. TYPE 3 RO WATER FAUCET –BY DIV. 22 –COUNTER MOUNTED
81. TYPE 1 DI WATER POLISHER SPEC 116000 – WALL MOUNTED U.O.N. (BLOCKING REQUIRED)
82. GLASS WALL PANEL–REFER TO ARCH.
83. HUB DRAIN FOR BODY FREEZER CONDENSATE BY DIV. 22
84. HUB DRAIN– BY DIV. 22
85. MONITOR AND INTERCOM TO OUTSIDE PEDESTAL – BY DIV. 26
86. S.S. WALL GUARD – REFER TO DET. 6/IL505. IN ROOMS 125, 125A AND 125B S.S. WALL GUARDS ARE TO BE BY COOLER MFR.
87. S.S. CORNER GUARD – REFER TO DET. 6/IL505
88. ADJUSTABLE DOCK LIGHT– BY DIV. 26
89. X–RAY ROOM TO BE R.F. SHIELDED PER QUALIFIED PHYSICIST CONSULTANT PRIOR TO CONSTRUCTION. INTEGRAL COUNTERTOP SIDE SPLASH
90. MOP AND BROOM HOLDER RACK–SPEC. 116000
91. STEEL STRUCTURE TO SUPPORT DISSECTING STATION –BY STRUCTURAL ENGINEER
92. APPROXIMATE LOCATION OF EVAPORATING UNITS IN COLD ROOMS MOUNTED NEAR CEILING
93. SCALE POLE BRACKET–SPEC 117810
94. SPRAY HOSE ASSEMBLY – SPEC. 117800
95. MONITOR MOUNTED ON ARTICULATING SWIVEL ARM BRACKET–BY DIV. 27, WALL BLOCKING AS REQ'D
96. HYDRO ASPIRATOR – SPEC. 117810
97. STUB FOR FUTURE DIRECT EXHAUST AND SNORKEL CONNECTION– BY DIV. 23
98. 3' H X 4' W MARKER BOARD–SPEC. 101100
99. ARTICULATING MARKER BOARD–SPEC 116000
100. S.S. SHELF – 12"L x 10"D
101. S.S. SHELF – 11"D, PROVIDE HOLE IN SHELF FOR SCALE POST AND ALIGN WITH SCALE POST BRACKET
102. MATCHING BACK DRAFT WALL VENTS SUPPLIED BY DISSECTION TABLE MFR SPEC 117810 – DIV. 23 WILL CONNECT THE EXHAUST.
103. 6" INTEGRAL WALL BASE– REFER TO FINISH SCHEDULE
104. INSTRUMENT DRAWER–SPEC. 117810
105. DISPOSAL SWITCH
106. GFCI OUTLET W/ WEATHERPROOF COVER
107. 2 HP DISPOSAL– SPEC. 117810
108. END RINSE CONTROL VALVE
109. HW & CW MIXING FAUCET
110. EXHAUST VENTS BY DISSECTING STATION MFR. (8"X30") –COORDINATE DUCTWORK WITH DIV. 23
111. UV PASS–THRU CABINET WITH VISION DOORS SPEC 116000– REFER TO DETAIL 5/IL504
112. ABOVE COUNTER RECEPTACLE RECESSED INTO SERVICE CLOSURE PANEL OR CHASE– REFER TO ELECTRICAL DRAWINGS.
113. STAINLESS STEEL CANOPY–BY DIV. 23
114. CURTAIN AND TRACK– BY DIV. 10
115. MARBLE TABLE – SPEC. 116000
116. TASK LIGHT– BY DIV. 26
117. LIQUID NITROGEN DEWAR, NIC
118. 1" DIA. HOLE W/CAP FOR DI WATER DELIVERY DEVICE
119. (2) PADLOCK RACK MOUNTED ON WALL @54" AFF AND 48" AFF
120. EXHAUST VENTS TO BE HAVE OPPOSED BLADE DAMPER ACCESSIBLE TROUGH THE FACE OF THE GRILL FOR AIR BALANCING –BY DISSECTING TABLE MFR
121. POWER FROM BELOW– BY DIV. 26
122. STUB OUT HVAC FOR FUTURE ME6
123. CURTAIN–BY DIV. 10
124. HEIGHT DETERMINED BY ME13
125. STOP REAGENT SHELF FOR TALL CABINETS
126. CONTROL FOR ME25 POWER AND DATA BY DIV. 26

CRSA
649 E. South Temple
Salt Lake City, UT 84102
801.355.5915

MWL
11798 N. Lakeridge Pkwy.
Ashland, VA 23005
804-228-7473

State of Utah
Department of Administrative Services
Division of Facilities Construction & Management
4110 State Office Building
Salt Lake City, Utah 84114
Phone: (801) 538 - 3018
Fax: (801) 538 - 3267

DFCM APPROVAL STAMP

STATE OF UTAH #134098 MEHRDAD SAMII LICENSED ARCHITECT
04.28.2014
ARCHITECT-ENGINEER STAMP

Unified State Laboratory Module 2
4501 South 2700 West,
Taylorsville, UT 84118

KEY PLAN

DFCM #: 13020300
Project #: B13-024

DATE:	ISSUE TYPE:
APRIL 21, 2014	BID SET
MAY 8, 2015	ADD # 1
CHECKED BY	B. CARVER
DRAWN BY	B. WARRREN

1ST FLOOR ENLARGED LAB PLANS

1

IL100
VOLUME 1

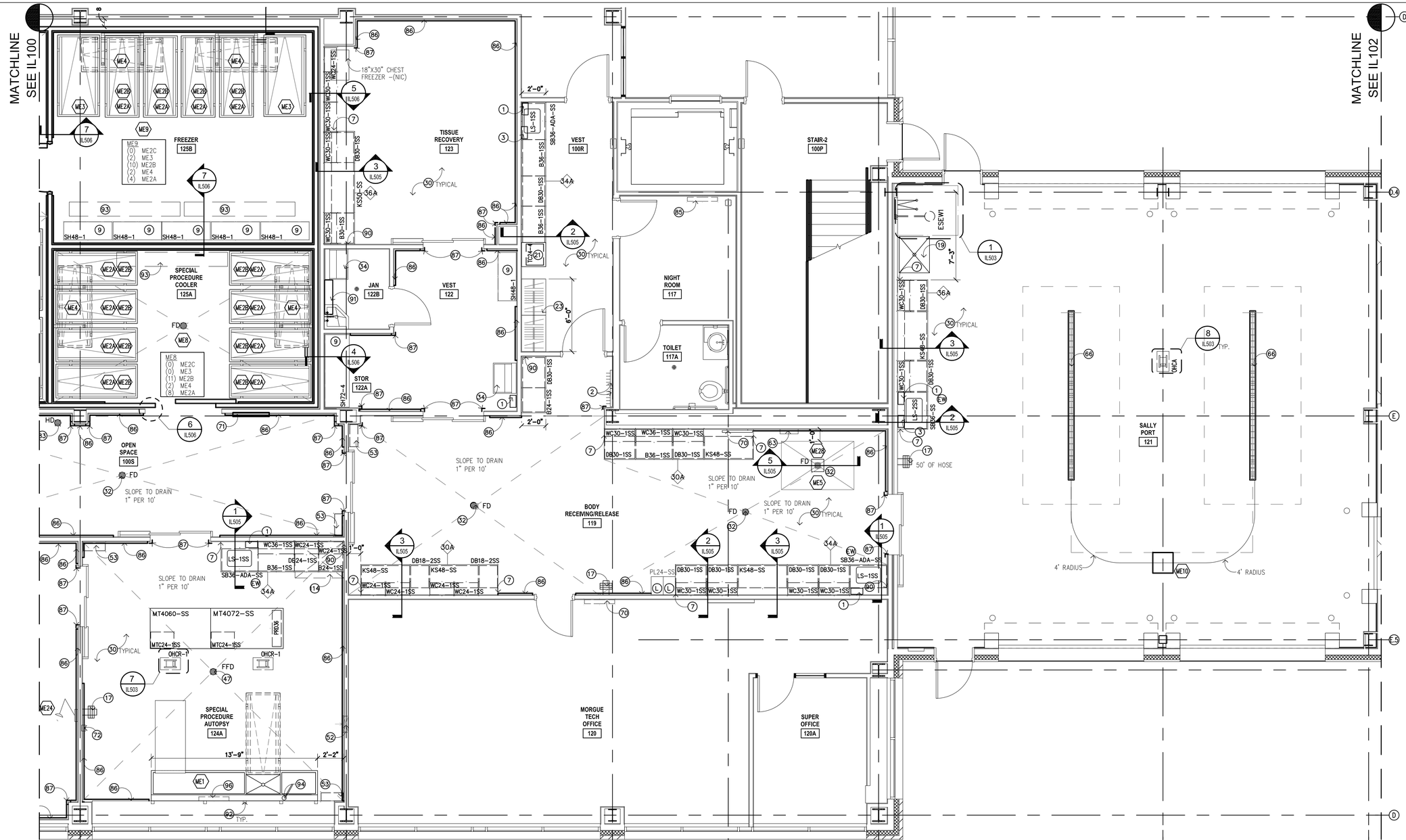

KEY SYMBOLS

- (L) LOCKING
- (M) MONITOR TO BMS
- (EW) DECK MOUNTED DRENCH HOSE EYEWASH FIXTURE
- (CA) COMPRESSED AIR
- XXX MARINE EDGE COUNTER ELEVATION IN INCHES
- XX NON-MARINE EDGE COUNTER ELEVATION IN INCHES
- (X) KEY NOTES
- (XX) EQUIPMENT
- XXX ROOM NUMBERS

KEY NOTES

1. PAPER TOWEL DISPENSER- SPEC. 116000
2. COAT HOOK STRIP MOUNTED @54" AFF-SPEC 116000 MOUNT SINGLE HOOK @ 48" CENTERED BELOW HOOK STRIP -REFER TO ARCHITECTURAL
3. SAFETY SUPPLY CABINET, REFER TO DETAIL 7/IL505 SPEC 116000
4. 1" DIA INLET PORT FOR HYDROGEN GENERATOR
5. OPEN TO FINISH WALL SURFACE
6. EPOXY DRYING RACK – 18"x36" – SPEC 123450
7. FILLER PANEL – MATCH CASEWORK MATERIAL REFER TO 4/IL510 FOR AUTOPSY END FILLER PANEL CONDITION
8. OMIT FRONT AND BACK APRON FOR 34" HIGH UNDER COUNTER EQUIPMENT.
9. SS SHELVING-SPEC 116000
10. 2 1/2" CORD GROMMET-SPEC 123450
11. CONTROL PANEL FOR FA7 (TARGET TROLLEY)
12. 2'X4' STAINLESS STEEL FOLD DOWN SURFACE – REFER TO DETAIL 8/IL507
13. COUNTERTOP MOUNTED COMPRESSED AIR (CA) TURRET
14. COLD WATER HOSE BIB @54" AFF- BY DIV. 22
15. HIGH DENSITY SHELVING- BY DIV. 10
16. KSSF SUPPORT FRAME- REFER TO DETAIL 9/IL500
17. HOT & COLD MIXING STATION-BY DIV. 22 (W/ 30' OF HOSE U.O.N)
18. MOBILE LIFT PARK
19. UTILITY SINK- BY DIV. 22
20. UNDER COUNTER KNEE WALL SUPPORT -REFER TO ARCHITECTURAL
21. SPILL CART-SPEC 116000
22. SUPPORT LEG-BY DIV. 12
23. COAT RACK & SHELF-SPEC 116000
24. WALL MOUNTED PAPER ROLL DISPENSER WITH PLASTIC LAMINATE COVERED PLYWOOD BACKBOARD. 36"HX12"H MOUNTED AT 48" AFF TO BOTTOM.
25. DOUBLE KSSF- REFER TO DETAIL 9/IL502
26. ELEVATION TRANSITION POINT
27. MILLWORK-BY DIV. 6
28. FORMALIN SPIGOT-SPEC 117810
29. UNDERCOUNTER TYPE I WATER POLISHER-BY DIV. 22
30. ALL STAINLESS STEEL CASEWORK IN AUTOPSY SUITES WILL HAVE MARINE EDGE COUNTER TOPS.
31. GAS MANIFOLD @66" A.F.F. (BOTTOM) –BY DIV. 22
32. FLOOR DRAIN- BY DIV. 22
33. DISSECTION TABLE SHELF BY MFR
34. STAINLESS STEEL SCRUB SINK- BY DIV. 22
35. LEVEL 4 BULLET RESISTANT DOOR/FRAME-SPEC 083950
36. 'IN USE' LIGHT-DETAIL-1/IL507-BY DIV. 26
37. PUMP CONTROL FOR FORMALIN DISPENSER
38. MAPLE COUNTER-2" THICK W/ 3/4" X 3 1/2" MAPLE BACK SPLASH W/ 4" LEADING EDGE OVERHANG- SPEC 123450
39. 8" DIA. EXHAUST DUCT FROM PROJECTILE RECOVERY TANK. DIV. 23 TO CONNECT EXHAUST
40. MOBILE DISSECTING WING-SPEC 117810
41. WALL MOUNTED LONG GUN RACK – REFER TO 7/IL507
42. PAINTED 3" NUMBER AND ARROW WHITE PAINT STENCILED ON RUBBER PANELS AT 1 YARD INCREMENTS MEASURED FROM THE ZERO POINT OF THE FIRING LINE. ACCURACY REQUIRED WITHIN 1/16".
43. OPEN ALL OF THE WAY THROUGH
44. GAS ANNUNCIATOR PANEL- BY DIV. 22
45. FORMALIN CONTAINER AND DISPENSING PUMP ON 18"D SHELF -SPEC 117810
46. PAINTED FIRING LINE- REFER TO DETAIL 3/IL507
47. FLUSHING FLOOR DRAIN-BY DIV. 22
48. CONTROLS FOR RANGE AIR HANDLING SYSTEM- DIV. 23
49. 36"L X 12" W X 1" THICK MAPLE WOOD SHELF MOUNT & 48" AFF-SPEC 123450
50. CW CONNECTION @ 48" A.F.F.-REFER TO PLUMB. VERIFY LOCATION BASED ON APPROVED SHOP DRAWINGS OF PRT
51. MANUAL OPERATED BLACKOUT SHADE-SPEC 122413
52. LOW ELEVATION EXHAUST- REFER TO MECHANICAL
53. BUG ZAPPER MOUNTED @ +84" A.F.F.-BY DIV 26 -SPEC 116000
54. HAMPER- NIC
55. 2-1/2" X 18" CORD SLOT
56. EXHAUST VENTS BY DISSECTING STATION MFR. (VERIFY 8"X24") -COORDINATE DUCTWORK WITH DIV. 23
57. ACID VENT PIPE- REFER TO DETAIL 2/IL500 AND MECHANICAL
58. ADJUSTABLE TOOL RACK-SPEC 114900 REFER TO DETAIL 5/IL507
59. 12"X12"X12" FLOOR SINK-BY DIV. 22
60. PRESSURE DIFFERENTIAL INDICATOR @ 54" AFF- BY DIV. 23
61. U.L. 4 BULLET RESISTANT WINDOW & FRAME- SPEC 085653
62. DIRECT CONNECT EXHAUST- BY DIV. 23
63. DIGITAL READOUT FOR SCALE-SPEC 117810
64. ACID VENT DUCT- REFER TO TACDx ELEVATION ON IL004- BY DIV. 23
65. BELOW COUNTER RECEPTACLE RECESSED INTO SERVICE CLOSURE PANEL- REFER TO ELECTRICAL DRAWINGS.
66. TRENCH DRAIN- BY DIV. 22
67. USER CONTROLLED AIR FLOW SWITCH-BY DIV. 23
68. BULLET TRAP/RANGE SIGN MOUNTED AT 60" AFF TO BOTTOM-SPEC. 114900
69. PRT SIGN MOUNTED AT 60" AFF TO BOTTOM. -SPEC. 114900
70. WALL MOUNTED FLAT PANEL MONITOR-BY DIV. 27
71. COOLER CONTROL PANEL
72. IN-WALL FLUSH VALVE FOR FLUSHING FLOOR DRAINS – BY DIV. 22
73. EXISTING AMMO STORAGE SHELVING SYSTEM TO BE RELOCATED TO NEW FACILITY BY CONTRACTOR
74. BACKDRAFT EXHAUST GRILLE- BY DIV. 23 REFER TO MECH. FOR SIZE, MOUNT ABOVE COUNTERTOP BACKSPLASH
75. ADA COMPLIANT S.S. SINK-BY DIV. 22
76. REMOVABLE EVIDENCE RACK MOUNTED TO MOBILE TABLE-REFER TO DETAIL 2/IL502-SPEC 123450
77. UMBILICAL SERVICE CHASE-SPEC 123450
78. DIRECT CONNECT PRT TO CW
79. COMPRESSED AIR- BY DIV. 23
80. TYPE 3 RO WATER FAUCET –BY DIV. 22 -COUNTER MOUNTED
81. TYPE 1 DI WATER POLISHER SPEC 116000 – WALL MOUNTED U.O.N. (BLOCKING REQUIRED)
82. GLASS WALL PANEL-REFER TO ARCH.
83. HUB DRAIN FOR BODY FREEZER CONDENSATE BY DIV. 22
84. HUB DRAIN- BY DIV. 22
85. MONITOR AND INTERCOM TO OUTSIDE PEDESTAL – BY DIV. 26
86. S.S. WALL GUARD – REFER TO DET. 6/IL505. IN ROOMS 125, 125A AND 125B S.S. WALL GUARDS ARE TO BE BY COOLER MFR.
87. S.S. CORNER GUARD – REFER TO DET. 6/IL505
88. ADJUSTABLE DOCK LIGHT- BY DIV. 26
89. X-RAY ROOM TO BE R.F. SHIELDED PER QUALIFIED PHYSICIST CONSULTANT PRIOR TO CONSTRUCTION.
90. INTEGRAL COUNTERTOP SIDE SPLASH
91. MOP AND BROOM HOLDER RACK-SPEC. 116000
92. STEEL STRUCTURE TO SUPPORT DISSECTING STATION –BY STRUCTURAL ENGINEER
93. APPROXIMATE LOCATION OF EVAPORATING UNITS IN COLD ROOMS MOUNTED NEAR CEILING
94. SCALE POLE BRACKET-SPEC 117810
95. SPRAY HOSE ASSEMBLY – SPEC. 117800
96. MONITOR MOUNTED ON ARTICULATING SWIVEL ARM BRACKET-BY DIV. 27, WALL BLOCKING AS REQ'D
97. HYDRO ASPIRATOR – SPEC. 117810
98. STUB FOR FUTURE DIRECT EXHAUST AND SNORKEL CONNECTION- BY DIV. 23
99. 3" H X 4" W MARKER BOARD-SPEC. 101100
100. ARTICULATING MARKER BOARD-SPEC 116000
101. S.S. SHELF – 12"L x 10"D
102. S.S. SHELF – 11"D, PROVIDE HOLE IN SHELF FOR SCALE POST AND ALIGN WITH SCALE POST BRACKET
103. MATCHING BACK DRAFT WALL VENTS SUPPLIED BY DISSECTION TABLE MFR SPEC 117810 – DIV. 23 WILL CONNECT THE EXHAUST.
104. 6" INTEGRAL WALL BASE- REFER TO FINISH SCHEDULE
105. INSTRUMENT DRAWER-SPEC. 117810
106. DISPOSAL SWITCH
107. GFCI OUTLET W/ WEATHERPROOF COVER
108. 2 HP DISPOSAL- SPEC. 117810
109. END RINSE CONTROL VALVE
110. HW & CW MIXING FAUCET
111. EXHAUST VENTS BY DISSECTING STATION MFR. (8"X30") -COORDINATE DUCTWORK WITH DIV. 23
112. UV PASS-THRU CABINET WITH VISION DOORS SPEC 116000- REFER TO DETAIL 5/IL504
113. ABOVE COUNTER RECEPTACLE RECESSED INTO SERVICE CLOSURE PANEL OR CHASE- REFER TO ELECTRICAL DRAWINGS.
114. STAINLESS STEEL CANOPY-BY DIV. 23
115. CURTAIN AND TRACK- BY DIV. 10
116. MARBLE TABLE – SPEC. 116000
117. TASK LIGHT- BY DIV. 26
118. LIQUID NITROGEN DEWAR, NIC
119. 1" DIA. HOLE W/CAP FOR DI WATER DELIVERY DEVICE.
120. (2) PADLOCK RACK MOUNTED ON WALL @54" AFF AND 48" AFF
121. EXHAUST VENTS TO BE HAVE OPPOSED BLADE DAMPER ACCESSIBLE TROUGH THE FACE OF THE GRILL FOR AIR BALANCING –BY DISSECTING TABLE MFR
122. POWER FROM BELOW- BY DIV. 26
123. STUB OUT HVAC FOR FUTURE ME6
124. CURTAIN-BY DIV. 10
125. HEIGHT DETERMINED BY ME13
126. STOP REAGENT SHELF FOR TALL CABINETS
127. CONTROL FOR ME25 POWER AND DATA BY DIV. 26

CRSA
649 E. South Temple
Salt Lake City, UT 84102
801.355.5915

MWL
11798 N. Lakeridge Pkwy.
Ashland, VA 23005
804-228-7473

State of Utah
Department of Administrative Services
Division of Facilities Construction & Management
4110 State Office Building
Salt Lake City, Utah 84114
Phone: (801) 538 - 3018
Fax: (801) 538 - 3267

DFCM APPROVAL STAMP

STATE OF UTAH #134088 MEHRDAD SAMII LICENSED ARCHITECT
04.28.2014

ARCHITECT-ENGINEER STAMP

Unified State Laboratory Module 2

4501 South 2700 West,
Taylorsville, UT 84118

KEY PLAN

DFCM #:	13020300
Project #:	B13-024

DATE:	ISSUE TYPE:
APRIL 21, 2014	BID SET
MAY 8, 2015	ADD # 1
CHECKED BY	B. CARVER
DRAWN BY	B. WARRREN

1ST FLOOR ENLARGED LAB PLANS

1

IL101

VOLUME 1

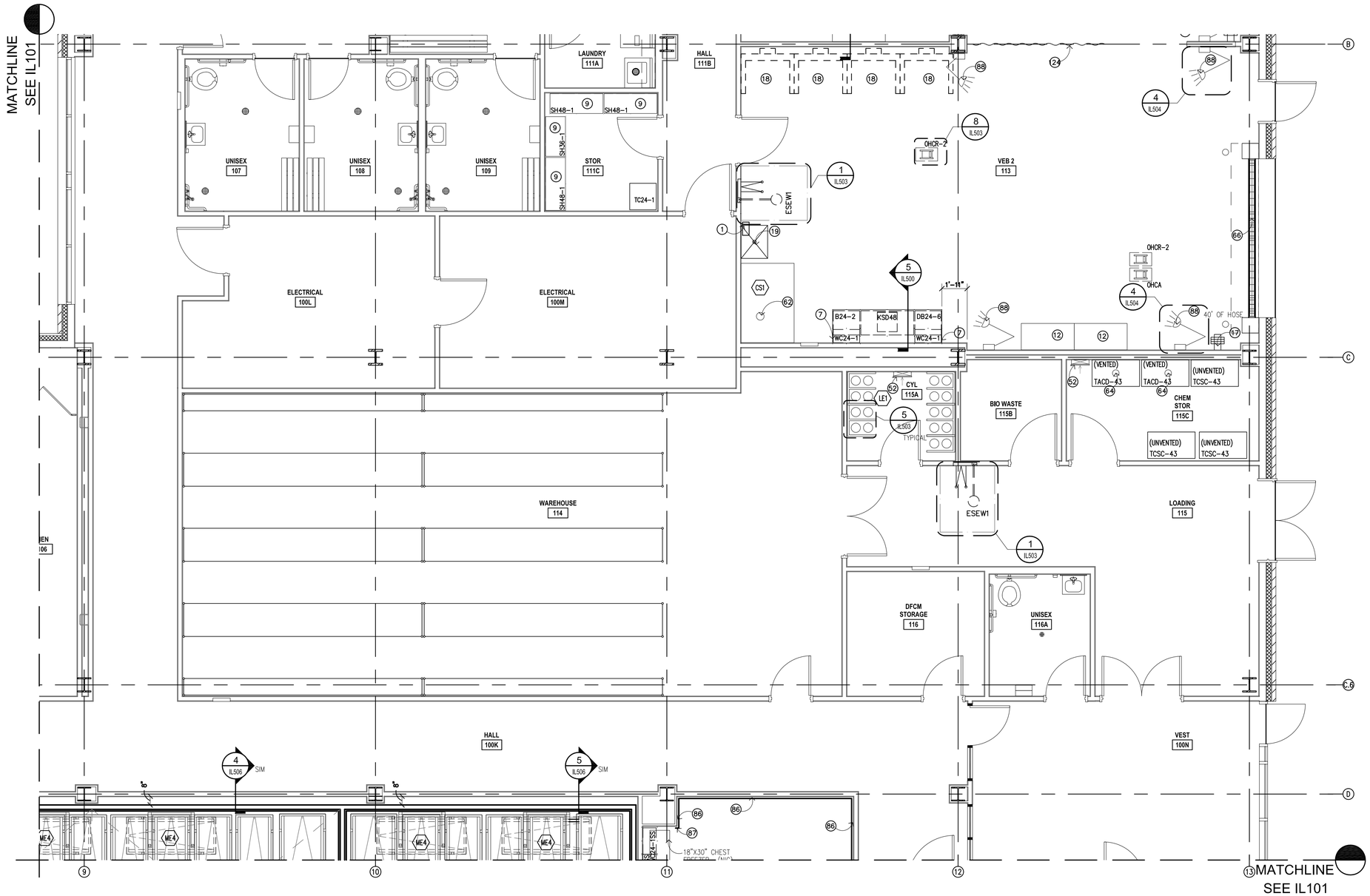

KEY SYMBOLS

- (L) LOCKING
- (M) MONITOR TO BMS
- (EW) DECK MOUNTED DRENCH HOSE EYEWASH FIXTURE
- (CA) COMPRESSED AIR
- (XX)— MARINE EDGE COUNTER ELEVATION IN INCHES
- (XX)— NON-MARINE EDGE COUNTER ELEVATION IN INCHES
- (X) KEY NOTES
- (XX) EQUIPMENT
- XXX ROOM NUMBERS

KEY NOTES

1. PAPER TOWEL DISPENSER- SPEC. 116000
2. COAT HOOK STRIP MOUNTED @54" AFF-SPEC 116000 MOUNT SINGLE HOOK @ 48" CENTERED BELOW HOOK STRIP
3. SAFETY SUPPLY CABINET, REFER TO DETAIL 7/IL505 SPEC 116000
4. 1" DIA INLET PORT FOR HYDROGEN GENERATOR
5. OPEN TO FINISH WALL SURFACE
6. EPOXY DRYING RACK – 18"x36" – SPEC 123450
7. FILLER PANEL – MATCH CASEWORK MATERIAL REFER TO 4/IL510 FOR AUTOPSY END FILLER PANEL CONDITION
8. OMIT FRONT AND BACK APRON FOR 34" HIGH UNDER COUNTER EQUIPMENT.
9. SS SHELVING-SPEC 116000
10. 2 1/2" CORD GROMMET-SPEC 123450
11. CONTROL PANEL FOR FA7 (TARGET TROLLEY)
12. 2'X4' STAINLESS STEEL FOLD DOWN SURFACE – REFER TO DETAIL 8/IL507
13. COUNTERTOP MOUNTED COMPRESSED AIR (CA) TURRET
14. COLD WATER HOSE BIB @54" AFF- BY DIV. 22
15. HIGH DENSITY SHELVING- BY DIV. 10
16. KSSF SUPPORT FRAME- REFER TO DETAIL 9/IL500
17. HOT & COLD MIXING STATION-BY DIV. 22 (W/ 30' OF HOSE U.O.N)
18. MOBILE LIFT PARK
19. UTILITY SINK- BY DIV. 22
20. UNDER COUNTER KNEE WALL SUPPORT -REFER TO ARCHITECTURAL
21. SPILL CART-SPEC 116000
22. SUPPORT LEG-BY DIV. 12
23. COAT RACK & SHELF-SPEC 116000
24. WALL MOUNTED PAPER ROLL DISPENSER WITH PLASTIC LAMINATE COVERED PLYWOOD BACKBOARD. 36"HX12"H MOUNTED AT 48" AFF TO BOTTOM.
25. DOUBLE KSSF- REFER TO DETAIL 9/IL502
26. ELEVATION TRANSITION POINT
27. MILLWORK-BY DIV. 6
28. FORMALIN SPIGOT-SPEC 117810
29. UNDERCOUNTER TYPE I WATER POLISHER-BY DIV. 22
30. ALL STAINLESS STEEL CASEWORK IN AUTOPSY SUITES WILL HAVE MARINE EDGE COUNTER TOPS.
31. GAS MANIFOLD @66" A.F.F. (BOTTOM) -BY DIV. 22
32. FLOOR DRAIN- BY DIV. 22
33. DISSECTION TABLE SHELF BY MFR
34. STAINLESS STEEL SCRUB SINK- BY DIV. 22
35. LEVEL 4 BULLET RESISTANT DOOR/FRAME-SPEC 083950
36. 'IN USE' LIGHT-DETAIL-1/IL507-BY DIV. 26
37. PUMP CONTROL FOR FORMALIN DISPENSER
38. MAPLE COUNTER-2" THICK W/ 3/4" X 3 1/2" MAPLE BACK SPLASH W/ 4" LEADING EDGE OVERHANG- SPEC 123450
39. 8" DIA. EXHAUST DUCT FROM PROJECTILE RECOVERY TANK. DIV. 23 TO CONNECT EXHAUST
40. MOBILE DISSECTING WING-SPEC 117810
41. WALL MOUNTED LONG GUN RACK – REFER TO 7/IL507
42. PAINTED 3" NUMBER AND ARROW WHITE PAINT STENCILED ON RUBBER PANELS AT 1 YARD INCREMENTS MEASURED FROM THE ZERO POINT OF THE FIRING LINE. ACCURACY REQUIRED WITHIN 1/16".
43. OPEN ALL OF THE WAY THROUGH
44. GAS ANNUNCIATOR PANEL- BY DIV. 22
45. FORMALIN CONTAINER AND DISPENSING PUMP ON 18"D SHELF -SPEC 117810
46. PAINTED FIRING LINE- REFER TO DETAIL 3/IL507
47. FLUSHING FLOOR DRAIN-BY DIV. 22
48. CONTROLS FOR RANGE AIR HANDLING SYSTEM- DIV. 23
49. 36"L X 12" W X 1" THICK MAPLE WOOD SHELF MOUNT & 48" AFF-SPEC 123450
50. CW CONNECTION @ 48" A.F.F.-REFER TO PLUMB. VERIFY LOCATION BASED ON APPROVED SHOP DRAWINGS OF PRT
51. MANUAL OPERATED BLACKOUT SHADE-SPEC 122413
52. LOW ELEVATION EXHAUST- REFER TO MECHANICAL
53. BUG ZAPPER MOUNTED @ +84" A.F.F.-BY DIV 26 -SPEC 116000
54. HAMPER- NIC
55. 2-1/2" X 18" CORD SLOT
56. EXHAUST VENTS BY DISSECTING STATION MFR. (VERIFY 8"X24") -COORDINATE DUCTWORK WITH DIV. 23
57. ACID VENT PIPE- REFER TO DETAIL 2/IL500 AND MECHANICAL
58. ADJUSTABLE TOOL RACK-SPEC 114900 REFER TO DETAIL 5/IL507
59. 12"X12"X12" FLOOR SINK-BY DIV. 22
60. PRESSURE DIFFERENTIAL INDICATOR @ 54" AFF- BY DIV. 23
61. U.L. 4 BULLET RESISTANT WINDOW & FRAME- SPEC 085653
62. DIRECT CONNECT EXHAUST- BY DIV. 23
63. DIGITAL READOUT FOR SCALE-SPEC 117810
64. ACID VENT DUCT- REFER TO TACDx ELEVATION ON IL004- BY DIV. 23
65. BELOW COUNTER RECEPTACLE RECESSED INTO SERVICE CLOSURE PANEL- REFER TO ELECTRICAL DRAWINGS.
66. TRENCH DRAIN- BY DIV. 22
67. USER CONTROLLED AIR FLOW SWITCH-BY DIV. 23
68. BULLET TRAP/RANGE SIGN MOUNTED AT 60" AFF TO BOTTOM-SPEC. 114900
69. PRT SIGN MOUNTED AT 60" AFF TO BOTTOM. -SPEC. 114900
70. WALL MOUNTED FLAT PANEL MONITOR-BY DIV. 27
71. COOLER CONTROL PANEL
72. IN-WALL FLUSH VALVE FOR FLUSHING FLOOR DRAINS – BY DIV. 22
73. EXISTING AMMO STORAGE SHELVING SYSTEM TO BE RELOCATED TO NEW FACILITY BY CONTRACTOR
74. BACKDRAFT EXHAUST GRILLE- BY DIV. 23 REFER TO MECH. FOR SIZE, MOUNT ABOVE COUNTERTOP BACKSPLASH
75. ADA COMPLIANT S.S. SINK-BY DIV. 22
76. REMOVABLE EVIDENCE RACK MOUNTED TO MOBILE TABLE-REFER TO DETAIL 2/IL502-SPEC 123450
77. UMBILICAL SERVICE CHASE-SPEC 123450
78. DIRECT CONNECT PRT TO CW
79. COMPRESSED AIR- BY DIV. 23
80. TYPE 3 RO WATER FAUCET -BY DIV. 22 -COUNTER MOUNTED
81. TYPE 1 DI WATER POLISHER SPEC 116000 – WALL MOUNTED U.O.N. (BLOCKING REQUIRED)
82. GLASS WALL PANEL-REFER TO ARCH.
83. HUB DRAIN FOR BODY FREEZER CONDENSATE BY DIV. 22
84. HUB DRAIN- BY DIV. 22
85. MONITOR AND INTERCOM TO OUTSIDE PEDESTAL – BY DIV. 26
86. S.S. WALL GUARD – REFER TO DET. 6/IL505. IN ROOMS 125, 125A AND 125B S.S. WALL GUARDS ARE TO BE BY COOLER MFR.
87. S.S. CORNER GUARD – REFER TO DET. 6/IL505
88. ADJUSTABLE DOCK LIGHT- BY DIV. 26
89. X-RAY ROOM TO BE R.F. SHIELDED PER QUALIFIED PHYSICIST CONSULTANT PRIOR TO CONSTRUCTION.
90. INTEGRAL COUNTERTOP SIDE SPLASH
91. MOP AND BROOM HOLDER RACK-SPEC. 116000
92. STEEL STRUCTURE TO SUPPORT DISSECTING STATION –BY STRUCTURAL ENGINEER
93. APPROXIMATE LOCATION OF EVAPORATING UNITS IN COLD ROOMS MOUNTED NEAR CEILING
94. SCALE POLE BRACKET-SPEC 117810
95. SPRAY HOSE ASSEMBLY – SPEC. 117800
96. MONITOR MOUNTED ON ARTICULATING SWIVEL ARM BRACKET-BY DIV. 27, WALL BLOCKING AS REQ'D
97. HYDRO ASPIRATOR – SPEC. 117810
98. STUB FOR FUTURE DIRECT EXHAUST AND SNORKEL CONNECTION- BY DIV. 23
99. 3' H X 4' W MARKER BOARD-SPEC. 101100
00. ARTICULATING MARKER BOARD-SPEC 116000
01. S.S. SHELF – 12"L x 10"D
02. S.S. SHELF – 11"D, PROVIDE HOLE IN SHELF FOR SCALE POST AND ALIGN WITH SCALE POST BRACKET
03. MATCHING BACK DRAFT WALL VENTS SUPPLIED BY DISSECTION TABLE MFR SPEC 117810 – DIV. 23 WILL CONNECT THE EXHAUST.
04. 6" INTEGRAL WALL BASE- REFER TO FINISH SCHEDULE
05. INSTRUMENT DRAWER-SPEC. 117810
06. DISPOSAL SWITCH
07. GFCI OUTLET W/ WEATHERPROOF COVER
08. 2 HP DISPOSAL- SPEC. 117810
09. END RINSE CONTROL VALVE
10. HW & CW MIXING FAUCET
11. EXHAUST VENTS BY DISSECTING STATION MFR. (8"X30") -COORDINATE DUCTWORK WITH DIV. 23
12. UV PASS-THRU CABINET WITH VISION DOORS SPEC 116000- REFER TO DETAIL 5/IL504
13. ABOVE COUNTER RECEPTACLE RECESSED INTO SERVICE CLOSURE PANEL OR CHASE- REFER TO ELECTRICAL DRAWINGS.
14. STAINLESS STEEL CANOPY-BY DIV. 23
15. CURTAIN AND TRACK- BY DIV. 10
16. MARBLE TABLE – SPEC. 116000
17. TASK LIGHT- BY DIV. 26
18. LIQUID NITROGEN DEWAR, NIC
19. 1" DIA. HOLE W/CAP FOR DI WATER DELIVERY DEVICE.
20. (2) PADLOCK RACK MOUNTED ON WALL @54" AFF AND 48" AFF
21. EXHAUST VENTS TO BE HAVE OPPOSED BLADE DAMPER ACCESSIBLE THROUGH THE FACE OF THE GRILL FOR AIR BALANCING –BY DISSECTING TABLE MFR
22. POWER FROM BELOW- BY DIV. 26
23. STUB OUT HVAC FOR FUTURE ME6
24. CURTAIN-BY DIV. 10
25. HEIGHT DETERMINED BY ME13
26. STOP REAGENT SHELF FOR TALL CABINETS
27. CONTROL FOR ME25 POWER AND DATA BY DIV. 26

CRSA
649 E. South Temple
Salt Lake City, UT 84102
801.355.5915

MWL
11798 N. Lakeridge Pkwy.
Ashland, VA 23005
804-228-7473

State of Utah
Department of Administrative Services
Division of Facilities Construction & Management
4110 State Office Building
Salt Lake City, Utah 84114
Phone: (801) 538 - 3018
Fax: (801) 538 - 3267

DFCM APPROVAL STAMP

STATE OF UTAH #134098 MEHRDAD SAMII LICENSED ARCHITECT
04.28.2014
ARCHITECT-ENGINEER STAMP

Unified State Laboratory Module 2
4501 South 2700 West,
Taylorsville, UT 84118

KEY PLAN

DFCM #: 13020300
Project #: B13-024

DATE:	ISSUE TYPE:
APRIL 21, 2014	BID SET
MAY 8, 2015	ADD # 1
CHECKED BY	B. CARVER
DRAWN BY	B. WARRREN

1ST FLOOR ENLARGED LAB PLANS

1

IL102

VOLUME 1

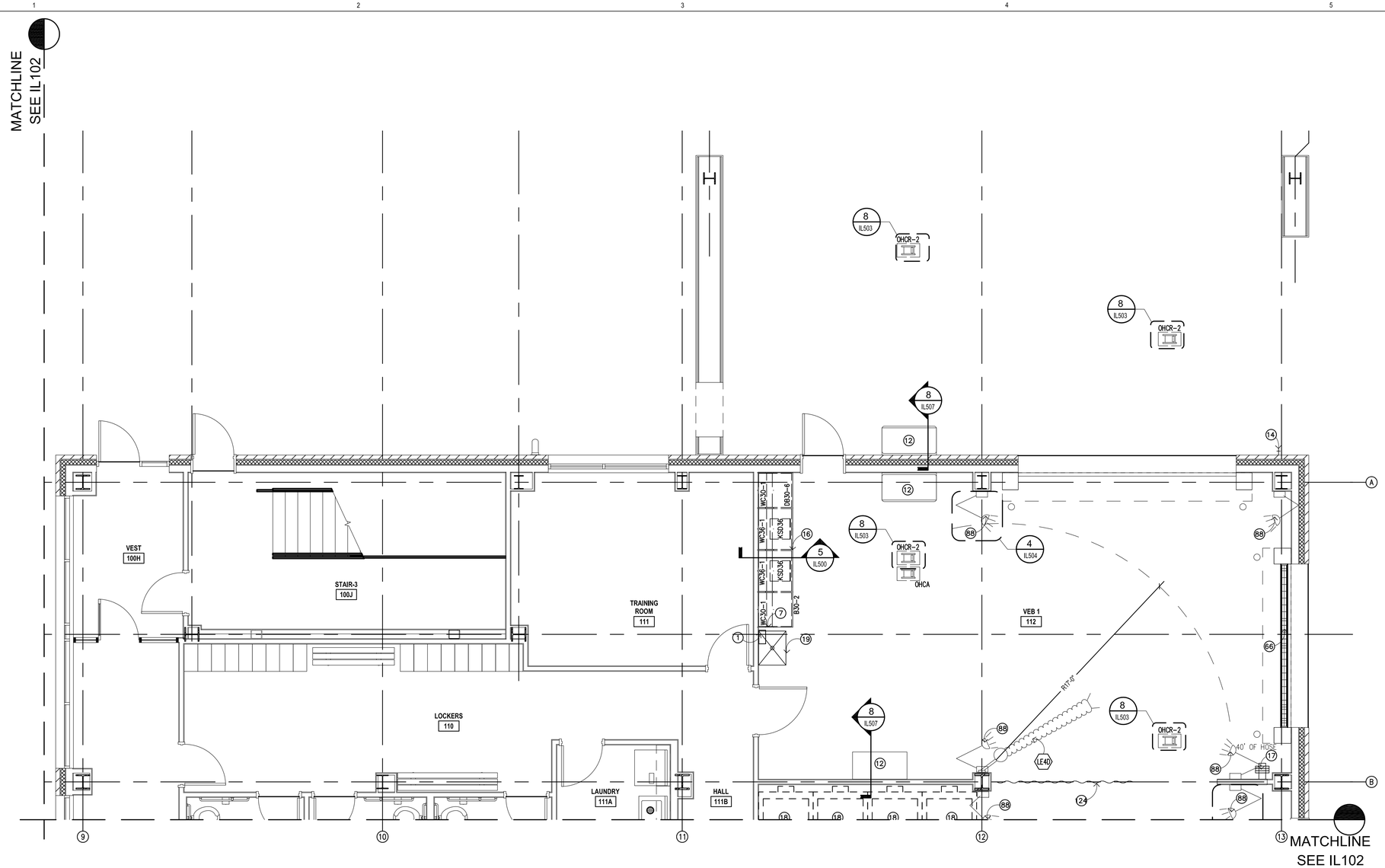

KEY SYMBOLS

- (L) LOCKING
- (M) MONITOR TO BMS
- (EW) DECK MOUNTED DRENCH HOSE EYEWASH FIXTURE
- (CA) COMPRESSED AIR
- (XX) MARINE EDGE COUNTER ELEVATION IN INCHES
- (XX) NON-MARINE EDGE COUNTER ELEVATION IN INCHES
- (X) KEY NOTES
- (XX) EQUIPMENT
- XXX ROOM NUMBERS

KEY NOTES

1. PAPER TOWEL DISPENSER- SPEC. 116000
2. COAT HOOK STRIP MOUNTED @54" AFF-SPEC 116000 MOUNT SINGLE HOOK @ 48" CENTERED BELOW HOOK STRIP
3. SAFETY SUPPLY CABINET, REFER TO DETAIL 7/IL505 SPEC 116000
4. 1" DIA INLET PORT FOR HYDROGEN GENERATOR
5. OPEN TO FINISH WALL SURFACE
6. EPOXY DRYING RACK – 18"x36" – SPEC 123450
7. FILLER PANEL – MATCH CASEWORK MATERIAL REFER TO 4/IL510 FOR AUTOPSY END FILLER PANEL CONDITION
8. OMIT FRONT AND BACK APRON FOR 34" HIGH UNDER COUNTER EQUIPMENT.
9. SS SHELVING-SPEC 116000
10. 2 1/2" CORD GROMMET-SPEC 123450
11. CONTROL PANEL FOR FA7 (TARGET TROLLEY)
12. 2'X4' STAINLESS STEEL FOLD DOWN SURFACE – REFER TO DETAIL 8/IL507
13. COUNTERTOP MOUNTED COMPRESSED AIR (CA) TURRET
14. COLD WATER HOSE BIB @54" AFF- BY DIV. 22
15. HIGH DENSITY SHELVING- BY DIV. 10
16. KSSF SUPPORT FRAME- REFER TO DETAIL 9/IL500
17. HOT & COLD MIXING STATION-BY DIV. 22 (W/ 30' OF HOSE U.O.N)
18. MOBILE LIFT PARK
19. UTILITY SINK- BY DIV. 22
20. UNDER COUNTER KNEE WALL SUPPORT –REFER TO ARCHITECTURAL
21. SPILL CART-SPEC 116000
22. SUPPORT LEG-BY DIV. 12
23. COAT RACK & SHELF-SPEC 116000
24. WALL MOUNTED PAPER ROLL DISPENSER WITH PLASTIC LAMINATE COVERED PLYWOOD BACKBOARD. 36"HX12"H MOUNTED AT 48" AFF TO BOTTOM.
25. DOUBLE KSSF- REFER TO DETAIL 9/IL502
26. ELEVATION TRANSITION POINT
27. MILLWORK-BY DIV. 6
28. FORMALIN SPIGOT-SPEC 117810
29. UNDERCOUNTER TYPE I WATER POLISHER-BY DIV. 22
30. ALL STAINLESS STEEL CASEWORK IN AUTOPSY SUITES WILL HAVE MARINE EDGE COUNTER TOPS.
31. GAS MANIFOLD @66" A.F.F. (BOTTOM) –BY DIV. 22
32. FLOOR DRAIN- BY DIV. 22
33. DISSECTION TABLE SHELF BY MFR
34. STAINLESS STEEL SCRUB SINK- BY DIV. 22
35. LEVEL 4 BULLET RESISTANT DOOR/FRAME-SPEC 083950
36. 'IN USE' LIGHT-DETAIL-1/IL507-BY DIV. 26
37. PUMP CONTROL FOR FORMALIN DISPENSER
38. MAPLE COUNTER-2" THICK W/ 3/4" X 3 1/2" MAPLE BACK SPLASH W/ 4" LEADING EDGE OVERHANG- SPEC 123450
39. 8" DIA. EXHAUST DUCT FROM PROJECTILE RECOVERY TANK. DIV. 23 TO CONNECT EXHAUST
40. MOBILE DISSECTING WING-SPEC 117810
41. WALL MOUNTED LONG GUN RACK – REFER TO 7/IL507
42. PAINTED 3" NUMBER AND ARROW WHITE PAINT STENCILED ON RUBBER PANELS AT 1 YARD INCREMENTS MEASURED FROM THE ZERO POINT OF THE FIRING LINE. ACCURACY REQUIRED WITHIN 1/16".
43. OPEN ALL OF THE WAY THROUGH
44. GAS ANNUNCIATOR PANEL- BY DIV. 22
45. FORMALIN CONTAINER AND DISPENSING PUMP ON 18"D SHELF –SPEC 117810
46. PAINTED FIRING LINE- REFER TO DETAIL 3/IL507
47. FLUSHING FLOOR DRAIN-BY DIV. 22
48. CONTROLS FOR RANGE AIR HANDLING SYSTEM- DIV. 23
49. 36"L X 12" W X 1" THICK MAPLE WOOD SHELF MOUNT & 48" AFF-SPEC 123450
50. CW CONNECTION @ 48" A.F.F.-REFER TO PLUMB. VERIFY LOCATION BASED ON APPROVED SHOP DRAWINGS OF PRT
51. MANUAL OPERATED BLACKOUT SHADE-SPEC 122413
52. LOW ELEVATION EXHAUST- REFER TO MECHANICAL
53. BUG ZAPPER MOUNTED @ +84" A.F.F.-BY DIV 26 –SPEC 116000
54. HAMPER- NIC
55. 2-1/2" X 18" CORD SLOT
56. EXHAUST VENTS BY DISSECTING STATION MFR. (VERIFY 8"X24") –COORDINATE DUCTWORK WITH DIV. 23
57. ACID VENT PIPE- REFER TO DETAIL 2/IL500 AND MECHANICAL
58. ADJUSTABLE TOOL RACK-SPEC 114900 REFER TO DETAIL 5/IL507
59. 12"X12"X12" FLOOR SINK-BY DIV. 22
60. PRESSURE DIFFERENTIAL INDICATOR @ 54" AFF- BY DIV. 23
61. U.L. 4 BULLET RESISTANT WINDOW & FRAME- SPEC 085653
62. DIRECT CONNECT EXHAUST- BY DIV. 23
63. DIGITAL READOUT FOR SCALE-SPEC 117810
64. ACID VENT DUCT- REFER TO TACDx ELEVATION ON IL004- BY DIV. 23
65. BELOW COUNTER RECEPTACLE RECESSED INTO SERVICE CLOSURE PANEL- REFER TO ELECTRICAL DRAWINGS.
66. TRENCH DRAIN- BY DIV. 22
67. USER CONTROLLED AIR FLOW SWITCH-BY DIV. 23
68. BULLET TRAP/RANGE SIGN MOUNTED AT 60" AFF TO BOTTOM-SPEC. 114900
69. PRT SIGN MOUNTED AT 60" AFF TO BOTTOM. –SPEC. 114900
70. WALL MOUNTED FLAT PANEL MONITOR-BY DIV. 27
71. COOLER CONTROL PANEL
72. IN-WALL FLUSH VALVE FOR FLUSHING FLOOR DRAINS – BY DIV. 22
73. EXISTING AMMO STORAGE SHELVING SYSTEM TO BE RELOCATED TO NEW FACILITY BY CONTRACTOR
74. BACKDRAFT EXHAUST GRILLE- BY DIV. 23 REFER TO MECH. FOR SIZE, MOUNT ABOVE COUNTERTOP BACKSPLASH
75. ADA COMPLIANT S.S. SINK-BY DIV. 22
76. REMOVABLE EVIDENCE RACK MOUNTED TO MOBILE TABLE-REFER TO DETAIL 2/IL502-SPEC 123450
77. UMBILICAL SERVICE CHASE-SPEC 123450
78. DIRECT CONNECT PRT TO CW
79. COMPRESSED AIR- BY DIV. 23
80. TYPE 3 RO WATER FAUCET –BY DIV. 22 –COUNTER MOUNTED
81. TYPE 1 DI WATER POLISHER SPEC 116000 – WALL MOUNTED U.O.N. (BLOCKING REQUIRED)
82. GLASS WALL PANEL-REFER TO ARCH.
83. HUB DRAIN FOR BODY FREEZER CONDENSATE BY DIV. 22
84. HUB DRAIN- BY DIV. 22
85. MONITOR AND INTERCOM TO OUTSIDE PEDESTAL – BY DIV. 26
86. S.S. WALL GUARD – REFER TO DET. 6/IL505. IN ROOMS 125, 125A AND 125B S.S. WALL GUARDS ARE TO BE BY COOLER MFR.
87. S.S. CORNER GUARD – REFER TO DET. 6/IL505
88. ADJUSTABLE DOCK LIGHT- BY DIV. 26
89. X-RAY ROOM TO BE R.F. SHIELDED PER QUALIFIED PHYSICIST CONSULTANT PRIOR TO CONSTRUCTION.
90. INTEGRAL COUNTERTOP SIDE SPLASH
91. MOP AND BROOM HOLDER RACK-SPEC. 116000
92. STEEL STRUCTURE TO SUPPORT DISSECTING STATION –BY STRUCTURAL ENGINEER
93. APPROXIMATE LOCATION OF EVAPORATING UNITS IN COLD ROOMS MOUNTED NEAR CEILING
94. SCALE POLE BRACKET-SPEC 117810
95. SPRAY HOSE ASSEMBLY – SPEC. 117800
96. MONITOR MOUNTED ON ARTICULATING SWIVEL ARM BRACKET-BY DIV. 27, WALL BLOCKING AS REQ'D
97. HYDRO ASPIRATOR – SPEC. 117810
98. STUB FOR FUTURE DIRECT EXHAUST AND SNORKEL CONNECTION- BY DIV. 23
99. 3' H X 4' W MARKER BOARD-SPEC. 101100
100. ARTICULATING MARKER BOARD-SPEC 116000
101. S.S. SHELF – 12"L x 10"D
102. S.S. SHELF – 11"D, PROVIDE HOLE IN SHELF FOR SCALE POST AND ALIGN WITH SCALE POST BRACKET
103. MATCHING BACK DRAFT WALL VENTS SUPPLIED BY DISSECTION TABLE MFR SPEC 117810 – DIV. 23 WILL CONNECT THE EXHAUST.
104. 6" INTEGRAL WALL BASE- REFER TO FINISH SCHEDULE
105. INSTRUMENT DRAWER-SPEC. 117810
106. DISPOSAL SWITCH
107. GFCI OUTLET W/ WEATHERPROOF COVER
108. 2 HP DISPOSAL- SPEC. 117810
109. END RINSE CONTROL VALVE
110. HW & CW MIXING FAUCET
111. EXHAUST VENTS BY DISSECTING STATION MFR. (8"X30") –COORDINATE DUCTWORK WITH DIV. 23
112. UV PASS-THRU CABINET WITH VISION DOORS SPEC 116000- REFER TO DETAIL 5/IL504
113. ABOVE COUNTER RECEPTACLE RECESSED INTO SERVICE CLOSURE PANEL OR CHASE- REFER TO ELECTRICAL DRAWINGS.
114. STAINLESS STEEL CANOPY-BY DIV. 23
115. CURTAIN AND TRACK- BY DIV. 10
116. MARBLE TABLE – SPEC. 116000
117. TASK LIGHT- BY DIV. 26
118. LIQUID NITROGEN DEWAR, NIC
119. 1" DIA. HOLE W/CAP FOR DI WATER DELIVERY DEVICE.
120. (2) PADLOCK RACK MOUNTED ON WALL @54" AFF AND 48" AFF
121. EXHAUST VENTS TO BE HAVE OPPOSED BLADE DAMPER ACCESSIBLE TROUGH THE FACE OF THE GRILL FOR AIR BALANCING –BY DISSECTING TABLE MFR
122. POWER FROM BELOW- BY DIV. 26
123. STUB OUT HVAC FOR FUTURE ME6
124. CURTAIN-BY DIV. 10
125. HEIGHT DETERMINED BY ME13
126. STOP REAGENT SHELF FOR TALL CABINETS
127. CONTROL FOR ME25 POWER AND DATA BY DIV. 26

CRSA
649 E. South Temple
Salt Lake City, UT 84102
801.355.5915

MWL
11798 N. Lakeridge Pkwy.
Ashland, VA 23005
804-228-7473

State of Utah
Department of Administrative Services
Division of Facilities Construction & Management
4110 State Office Building
Salt Lake City, Utah 84114
Phone: (801) 538 - 3018
Fax: (801) 538 - 3267

DFCM APPROVAL STAMP

STATE OF UTAH #134098 MEHRDAD SAMIE LICENSED ARCHITECT
04.28.2014
ARCHITECT-ENGINEER STAMP

Unified State Laboratory Module 2
4501 South 2700 West,
Taylorsville, UT 84118

KEY PLAN

DFCM #: 13020300
Project #: B13-024

DATE:	ISSUE TYPE:
APRIL 21, 2014	BID SET
MAY 8, 2015	ADD # 1

CHECKED BY	B. CARVER
DRAWN BY	B. WARRREN

1ST FLOOR ENLARGED LAB PLANS

1

IL103

VOLUME 1

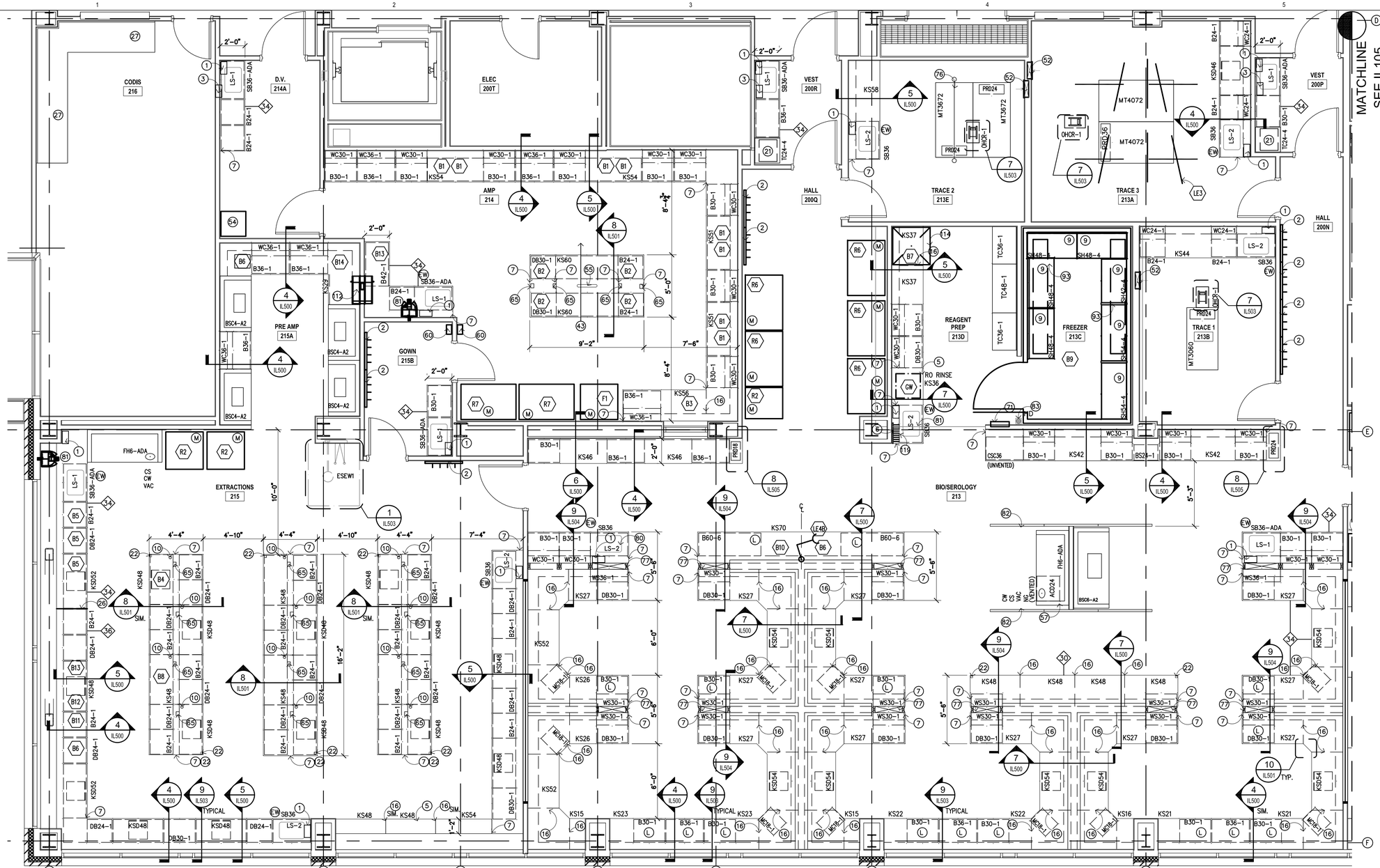

KEY SYMBOLS

- (L) LOCKING
- (M) MONITOR TO BMS
- (EW) DECK MOUNTED DRENCH HOSE EYEWASH FIXTURE
- (CA) COMPRESSED AIR
- XX MARINE EDGE COUNTER ELEVATION IN INCHES
- XX NON-MARINE EDGE COUNTER ELEVATION IN INCHES
- (X) KEY NOTES
- XX EQUIPMENT
- XXX ROOM NUMBERS

KEY NOTES

1. PAPER TOWEL DISPENSER– SPEC. 116000
2. COAT HOOK STRIP MOUNTED @54" AFF–SPEC 116000 MOUNT SINGLE HOOK @ 48" CENTERED BELOW HOOK STRIP
3. SAFETY SUPPLY CABINET, REFER TO DETAIL 7/IL505 SPEC 116000
4. 1" DIA INLET PORT FOR HYDROGEN GENERATOR
5. OPEN TO FINISH WALL SURFACE
6. EPOXY DRYING RACK – 18"x36" – SPEC 123450
7. FILLER PANEL – MATCH CASEWORK MATERIAL REFER TO 4/IL510 FOR AUTOPSY END FILLER PANEL CONDITION
8. OMIT FRONT AND BACK APRON FOR 34" HIGH UNDER COUNTER EQUIPMENT.
9. SS SHELVING–SPEC 116000
10. 2 1/2" CORD GROMMET–SPEC 123450
11. CONTROL PANEL FOR FA7 (TARGET TROLLEY)
12. 2'X4' STAINLESS STEEL FOLD DOWN SURFACE – REFER TO DETAIL 8/IL507
13. COUNTERTOP MOUNTED COMPRESSED AIR (CA) TURRET
14. COLD WATER HOSE BIB @54" AFF– BY DIV. 22
15. HIGH DENSITY SHELVING– BY DIV. 10
16. KSSF SUPPORT FRAME– REFER TO DETAIL 9/IL500
17. HOT & COLD MIXING STATION–BY DIV. 22 (W/ 30' OF HOSE U.O.N)
18. MOBILE LIFT PARK
19. UTILITY SINK– BY DIV. 22
20. UNDER COUNTER KNEE WALL SUPPORT –REFER TO ARCHITECTURAL
21. SPILL CART–SPEC 116000
22. SUPPORT LEG–BY DIV. 12
23. COAT RACK & SHELF–SPEC 116000
24. WALL MOUNTED PAPER ROLL DISPENSER WITH PLASTIC LAMINATE COVERED PLYWOOD BACKBOARD. 36"HX12"H MOUNTED AT 48" AFF TO BOTTOM.
25. DOUBLE KSSF– REFER TO DETAIL 9/IL502
26. ELEVATION TRANSITION POINT
27. MILLWORK–BY DIV. 6
28. FORMALIN SPIGOT–SPEC 117810
29. UNDERCOUNTER TYPE I WATER POLISHER–BY DIV. 22
30. ALL STAINLESS STEEL CASEWORK IN AUTOPSY SUITES WILL HAVE MARINE EDGE COUNTER TOPS.
31. GAS MANIFOLD @66" A.F.F. (BOTTOM) –BY DIV. 22
32. FLOOR DRAIN– BY DIV. 22
33. DISSECTION TABLE SHELF BY MFR
34. STAINLESS STEEL SCRUB SINK– BY DIV. 22
35. LEVEL 4 BULLET RESISTANT DOOR/FRAME–SPEC 083950
36. 'IN USE' LIGHT–DETAIL–1/IL507–BY DIV. 26
37. PUMP CONTROL FOR FORMALIN DISPENSER
38. MAPLE COUNTER–2" THICK W/ 3/4" X 3 1/2" MAPLE BACK SPLASH W/ 4" LEADING EDGE OVERHANG– SPEC 123450
39. 8" DIA. EXHAUST DUCT FROM PROJECTILE RECOVERY TANK. DIV. 23 TO CONNECT EXHAUST
40. MOBILE DISSECTING WING–SPEC 117810
41. WALL MOUNTED LONG GUN RACK – REFER TO 7/IL507
42. PAINTED 3" NUMBER AND ARROW WHITE PAINT STENCILED ON RUBBER PANELS AT 1 YARD INCREMENTS MEASURED FROM THE ZERO POINT OF THE FIRING LINE. ACCURACY REQUIRED WITHIN 1/16".
43. OPEN ALL OF THE WAY THROUGH
44. GAS ANNUNCIATOR PANEL– BY DIV. 22
45. FORMALIN CONTAINER AND DISPENSING PUMP ON 18"D SHELF –SPEC 117810
46. PAINTED FIRING LINE– REFER TO DETAIL 3/IL507
47. FLUSHING FLOOR DRAIN–BY DIV. 22
48. CONTROLS FOR RANGE AIR HANDLING SYSTEM– DIV. 23
49. 36"L X 12" W X 1" THICK MAPLE WOOD SHELF MOUNT & 48" AFF–SPEC 123450
50. CW CONNECTION @ 48" A.F.F.–REFER TO PLUMB. VERIFY LOCATION BASED ON APPROVED SHOP DRAWINGS OF PRT
51. MANUAL OPERATED BLACKOUT SHADE–SPEC 122413
52. LOW ELEVATION EXHAUST– REFER TO MECHANICAL –SPEC. 114900
53. BUG ZAPPER MOUNTED @ +84" A.F.F.–BY DIV 26 –SPEC 116000
54. HAMPER– NIC
55. 2-1/2" X 18" CORD SLOT
56. EXHAUST VENTS BY DISSECTING STATION MFR. (VERIFY 8"X24") –COORDINATE DUCTWORK WITH DIV. 23
57. ACID VENT PIPE– REFER TO DETAIL 2/IL500 AND MECHANICAL
58. ADJUSTABLE TOOL RACK–SPEC 114900 REFER TO DETAIL 5/IL507
59. 12"X12"X12" FLOOR SINK–BY DIV. 22
60. PRESSURE DIFFERENTIAL INDICATOR @ 54" AFF– BY DIV. 23
61. U.L. 4 BULLET RESISTANT WINDOW & FRAME– SPEC 085653
62. DIRECT CONNECT EXHAUST– BY DIV. 23
63. DIGITAL READOUT FOR SCALE–SPEC 117810
64. ACID VENT DUCT– REFER TO TACDx ELEVATION ON IL004– BY DIV. 23
65. BELOW COUNTER RECEPTACLE RECESSED INTO SERVICE CLOSURE PANEL– REFER TO ELECTRICAL DRAWINGS.
66. TRENCH DRAIN– BY DIV. 22
67. USER CONTROLLED AIR FLOW SWITCH–BY DIV. 23
68. BULLET TRAP/RANGE SIGN MOUNTED AT 60" AFF TO BOTTOM–SPEC. 114900
69. PRT SIGN MOUNTED AT 60" AFF TO BOTTOM. –SPEC. 114900
70. WALL MOUNTED FLAT PANEL MONITOR–BY DIV. 27
71. COOLER CONTROL PANEL
72. IN-WALL FLUSH VALVE FOR FLUSHING FLOOR DRAINS – BY DIV. 22
73. EXISTING AMMO STORAGE SHELVING SYSTEM TO BE RELOCATED TO NEW FACILITY BY CONTRACTOR
74. BACKDRAFT EXHAUST GRILLE– BY DIV. 23 REFER TO MECH. FOR SIZE. MOUNT ABOVE COUNTERTOP BACKSPLASH
75. ADA COMPLIANT S.S. SINK–BY DIV. 22
76. REMOVABLE EVIDENCE RACK MOUNTED TO MOBILE TABLE–REFER TO DETAIL 2/IL502–SPEC 123450
77. UMBILICAL SERVICE CHASE–SPEC 123450
78. DIRECT CONNECT PRT TO CW
79. COMPRESSED AIR– BY DIV. 23
80. TYPE 3 RO WATER FAUCET –BY DIV. 22 –COUNTER MOUNTED
81. TYPE 1 DI WATER POLISHER SPEC 116000 – WALL MOUNTED U.O.N. (BLOCKING REQUIRED)
82. GLASS WALL PANEL–REFER TO ARCH.
83. HUB DRAIN FOR BODY FREEZER CONDENSATE BY DIV. 22
84. HUB DRAIN– BY DIV. 22
85. MONITOR AND INTERCOM TO OUTSIDE PEDESTAL – BY DIV. 26
86. S.S. WALL GUARD – REFER TO DET. 6/IL505. IN ROOMS 125, 125A AND 125B S.S. WALL GUARDS ARE TO BE BY COOLER MFR.
87. S.S. CORNER GUARD – REFER TO DET. 6/IL505
88. ADJUSTABLE DOCK LIGHT– BY DIV. 26
89. X-RAY ROOM TO BE R.F. SHIELDED PER QUALIFIED PHYSICIST CONSULTANT PRIOR TO CONSTRUCTION.
90. INTEGRAL COUNTERTOP SIDE SPLASH
91. MOP AND BROOM HOLDER RACK–SPEC. 116000
92. STEEL STRUCTURE TO SUPPORT DISSECTING STATION –BY STRUCTURAL ENGINEER
93. APPROXIMATE LOCATION OF EVAPORATING UNITS IN COLD ROOMS MOUNTED NEAR CEILING
94. SCALE POLE BRACKET–SPEC 117810
95. SPRAY HOSE ASSEMBLY – SPEC. 117800
96. MONITOR MOUNTED ON ARTICULATING SWIVEL ARM BRACKET–BY DIV. 27, WALL BLOCKING AS REQ'D
97. HYDRO ASPIRATOR – SPEC. 117810
98. STUB FOR FUTURE DIRECT EXHAUST AND SNORKEL CONNECTION– BY DIV. 23
99. 3' H X 4' W MARKER BOARD–SPEC. 101100
100. ARTICULATING MARKER BOARD–SPEC 116000
101. S.S. SHELF – 12"L x 10"D
102. S.S. SHELF – 11"D, PROVIDE HOLE IN SHELF FOR SCALE POST AND ALIGN WITH SCALE POST BRACKET
103. MATCHING BACK DRAFT WALL VENTS SUPPLIED BY DISSECTION TABLE MFR SPEC 117810 – DIV. 23 WILL CONNECT THE EXHAUST.
104. 6" INTEGRAL WALL BASE– REFER TO FINISH SCHEDULE
105. INSTRUMENT DRAWER–SPEC. 117810
106. DISPOSAL SWITCH
107. GFCI OUTLET W/ WEATHERPROOF COVER
108. 2 HP DISPOSAL– SPEC. 117810
109. END RINSE CONTROL VALVE
110. HW & CW MIXING FAUCET
111. EXHAUST VENTS BY DISSECTING STATION MFR. (8"X30") –COORDINATE DUCTWORK WITH DIV. 23
112. UV PASS–THRU CABINET WITH VISION DOORS SPEC 116000– REFER TO DETAIL 5/IL504
113. ABOVE COUNTER RECEPTACLE RECESSED INTO SERVICE CLOSURE PANEL OR CHASE– REFER TO ELECTRICAL DRAWINGS.
114. STAINLESS STEEL CANOPY–BY DIV. 23
115. CURTAIN AND TRACK– BY DIV. 10
116. MARBLE TABLE – SPEC. 116000
117. TASK LIGHT– BY DIV. 26
118. LIQUID NITROGEN DEWAR, NIC
119. 1" DIA. HOLE W/CAP FOR DI WATER DELIVERY DEVICE
120. (2) PADLOCK RACK MOUNTED ON WALL @54" AFF AND 48" AFF
121. EXHAUST VENTS TO BE HAVE OPPOSED BLADE DAMPER ACCESSIBLE TROUGH THE FACE OF THE GRILL FOR AIR BALANCING –BY DISSECTING TABLE MFR
122. POWER FROM BELOW– BY DIV. 26
123. STUB OUT HVAC FOR FUTURE ME6
124. CURTAIN–BY DIV. 10
125. HEIGHT DETERMINED BY ME13
126. STOP REAGENT SHELF FOR TALL CABINETS
127. CONTROL FOR ME25 POWER AND DATA BY DIV. 26

CRSA
649 E. South Temple
Salt Lake City, UT 84102
801.355.5915

MWL
11798 N. Lakeridge Pkwy.
Ashland, VA 23005
804-228-7473

State of Utah
Department of Administrative Services
Division of Facilities Construction & Management
4110 State Office Building
Salt Lake City, Utah 84114
Phone: (801) 538 - 3018
Fax: (801) 538 - 3267

DFCM APPROVAL STAMP

STATE OF UTAH #134098 MEHRDAD SAMIE LICENSED ARCHITECT
04-28-2014

ARCHITECT-ENGINEER STAMP

Unified State Laboratory Module 2
4501 South 2700 West,
Taylorsville, UT 84118

KEY PLAN

DFCM #: 13020300

Project #: B13-024

DATE:	ISSUE TYPE:
APRIL 21, 2014	BID SET
MAY 8, 2015	ADD # 1

CHECKED BY: B. CARVER

DRAWN BY: B. WARRREN

2ND FLOOR ENLARGED LAB PLANS

1

IL104

VOLUME 1

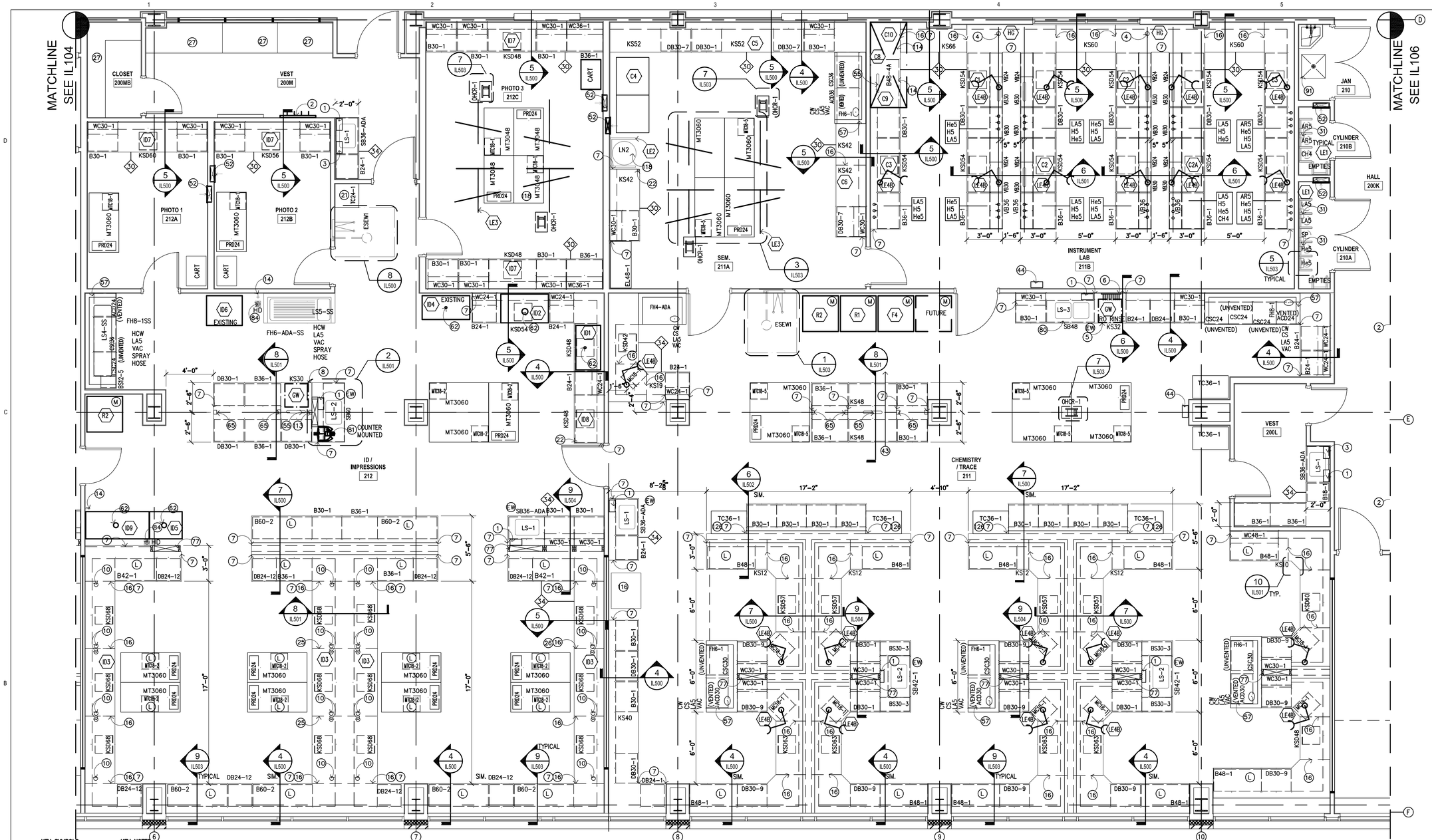

KEY SYMBOLS

- (L) LOCKING
- (M) MONITOR TO BMS
- (EW) DECK MOUNTED DRENCH HOSE EYEWASH FIXTURE
- (CA) COMPRESSED AIR
- XX.X MARINE EDGE COUNTER ELEVATION IN INCHES
- XX NON-MARINE EDGE COUNTER ELEVATION IN INCHES
- (X) KEY NOTES
- (XX) EQUIPMENT
- XXX ROOM NUMBERS

KEY NOTES

1. PAPER TOWEL DISPENSER– SPEC. 116000
2. COAT HOOK STRIP MOUNTED @54" AFF–SPEC 116000 MOUNT SINGLE HOOK @ 48" CENTERED BELOW HOOK STRIP
3. SAFETY SUPPLY CABINET, REFER TO DETAIL 7/IL505 SPEC 116000
4. 1" DIA INLET PORT FOR HYDROGEN GENERATOR
5. OPEN TO FINISH WALL SURFACE
6. EPOXY DRYING RACK – 18"x36" – SPEC 123450
7. FILLER PANEL – MATCH CASEWORK MATERIAL REFER TO 4/IL510 FOR AUTOPSY END FILLER PANEL CONDITION
8. OMIT FRONT AND BACK APRON FOR 34" HIGH UNDER COUNTER EQUIPMENT.
9. SS SHELVING–SPEC 116000
10. 2 1/2" CORD GROMMET–SPEC 123450
11. CONTROL PANEL FOR FA7 (TARGET TROLLEY)
12. 2'X4' STAINLESS STEEL FOLD DOWN SURFACE – REFER TO DETAIL 8/IL507
13. COUNTERTOP MOUNTED COMPRESSED AIR (CA) TURRET
14. COLD WATER HOSE BIB @54" AFF– BY DIV. 22
15. HIGH DENSITY SHELVING– BY DIV. 10
16. KSSF SUPPORT FRAME– REFER TO DETAIL 9/IL500
17. HOT & COLD MIXING STATION–BY DIV. 22 (W/ 30' OF HOSE U.O.N)
18. MOBILE LIFT PARK
19. UTILITY SINK– BY DIV. 22
20. UNDER COUNTER KNEE WALL SUPPORT –REFER TO ARCHITECTURAL
21. SPILL CART–SPEC 116000
22. SUPPORT LEG–BY DIV. 12
23. COAT RACK & SHELF–SPEC 116000
24. WALL MOUNTED PAPER ROLL DISPENSER WITH PLASTIC LAMINATE COVERED PLYWOOD BACKBOARD. 36"HX12"H MOUNTED AT 48" AFF TO BOTTOM.
25. DOUBLE KSSF– REFER TO DETAIL 9/IL502
26. ELEVATION TRANSITION POINT
27. MILLWORK–BY DIV. 6
28. FORMALIN SPIGOT–SPEC 117810
29. UNDERCOUNTER TYPE I WATER POLISHER–BY DIV. 22
30. ALL STAINLESS STEEL CASEWORK IN AUTOPSY SUITES WILL HAVE MARINE EDGE COUNTER TOPS.
31. GAS MANIFOLD @66" A.F.F. (BOTTOM) –BY DIV. 22
32. FLOOR DRAIN– BY DIV. 22
33. DISSECTION TABLE SHELF BY MFR
34. STAINLESS STEEL SCRUB SINK– BY DIV. 22
35. LEVEL 4 BULLET RESISTANT DOOR/FRAME–SPEC 083950
36. 'IN USE' LIGHT–DETAIL–1/IL507–BY DIV. 26
37. PUMP CONTROL FOR FORMALIN DISPENSER
38. MAPLE COUNTER–2" THICK W/ 3/4" X 3 1/2" MAPLE BACK SPLASH W/ 4" LEADING EDGE OVERHANG– SPEC 123450
39. 8" DIA. EXHAUST DUCT FROM PROJECTILE RECOVERY TANK. DIV. 23 TO CONNECT EXHAUST
40. MOBILE DISSECTING WING–SPEC 117810
41. WALL MOUNTED LONG GUN RACK – REFER TO 7/IL507
42. PAINTED 3" NUMBER AND ARROW WHITE PAINT STENCILED ON RUBBER PANELS AT 1 YARD INCREMENTS MEASURED FROM THE ZERO POINT OF THE FIRING LINE. ACCURACY REQUIRED WITHIN 1/16".
43. OPEN ALL OF THE WAY THROUGH
44. GAS ANNUNCIATOR PANEL– BY DIV. 22
45. FORMALIN CONTAINER AND DISPENSING PUMP ON 18"D SHELF –SPEC 117810
46. PAINTED FIRING LINE– REFER TO DETAIL 3/IL507
47. FLUSHING FLOOR DRAIN–BY DIV. 22
48. CONTROLS FOR RANGE AIR HANDLING SYSTEM– DIV. 23
49. 36"L X 12" W X 1" THICK MAPLE WOOD SHELF MOUNT & 48" AFF–SPEC 123450
50. CW CONNECTION @ 48" A.F.F.–REFER TO PLUMB. VERIFY LOCATION BASED ON APPROVED SHOP DRAWINGS OF PRT
51. MANUAL OPERATED BLACKOUT SHADE–SPEC 122413
52. LOW ELEVATION EXHAUST– REFER TO MECHANICAL –SPEC. 114900
53. BUG ZAPPER MOUNTED @ +84" A.F.F.–BY DIV 26 –SPEC 116000
54. HAMPER– NIC
55. 2–1/2" X 18" CORD SLOT
56. EXHAUST VENTS BY DISSECTING STATION MFR. (VERIFY 8"X24") –COORDINATE DUCTWORK WITH DIV. 23
57. ACID VENT PIPE– REFER TO DETAIL 2/IL500 AND MECHANICAL
58. ADJUSTABLE TOOL RACK–SPEC 114900 REFER TO DETAIL 5/IL507
59. 12"X12"X12" FLOOR SINK–BY DIV. 22
60. PRESSURE DIFFERENTIAL INDICATOR @ 54" AFF– BY DIV. 23
61. U.L. 4 BULLET RESISTANT WINDOW & FRAME– SPEC 085653
62. DIRECT CONNECT EXHAUST– BY DIV. 23
63. DIGITAL READOUT FOR SCALE–SPEC 117810
64. ACID VENT DUCT– REFER TO TACDx ELEVATION ON IL004– BY DIV. 23
65. BELOW COUNTER RECEPTACLE RECESSED INTO SERVICE CLOSURE PANEL– REFER TO ELECTRICAL DRAWINGS.
66. TRENCH DRAIN– BY DIV. 22
67. USER CONTROLLED AIR FLOW SWITCH–BY DIV. 23
68. BULLET TRAP/RANGE SIGN MOUNTED AT 60" AFF TO BOTTOM–SPEC. 114900
69. PRT SIGN MOUNTED AT 60" AFF TO BOTTOM. –SPEC. 114900
70. WALL MOUNTED FLAT PANEL MONITOR–BY DIV. 27
71. COOLER CONTROL PANEL
72. IN–WALL FLUSH VALVE FOR FLUSHING FLOOR DRAINS – BY DIV. 22
73. EXISTING AMMO STORAGE SHELVING SYSTEM TO BE RELOCATED TO NEW FACILITY BY CONTRACTOR
74. BACKDRAFT EXHAUST GRILLE– BY DIV. 23 REFER TO MECH. FOR SIZE, MOUNT ABOVE COUNTERTOP BACKSPLASH
75. ADA COMPLIANT S.S. SINK–BY DIV. 22
76. REMOVABLE EVIDENCE RACK MOUNTED TO MOBILE TABLE–REFER TO DETAIL 2/IL502–SPEC 123450
77. UMBILICAL SERVICE CHASE–SPEC 123450
78. DIRECT CONNECT PRT TO CW
79. COMPRESSED AIR– BY DIV. 23
80. TYPE 3 RO WATER FAUCET –BY DIV. 22 –COUNTER MOUNTED
81. TYPE 1 DI WATER POLISHER SPEC 116000 – WALL MOUNTED U.O.N. (BLOCKING REQUIRED)
82. GLASS WALL PANEL–REFER TO ARCH.
83. HUB DRAIN FOR BODY FREEZER CONDENSATE BY DIV. 22
84. HUB DRAIN– BY DIV. 22
85. MONITOR AND INTERCOM TO OUTSIDE PEDESTAL – BY DIV. 26
86. S.S. WALL GUARD – REFER TO DET. 6/IL505. IN ROOMS 125, 125A AND 125B S.S. WALL GUARDS ARE TO BE BY COOLER MFR.
87. S.S. CORNER GUARD – REFER TO DET. 6/IL505
88. ADJUSTABLE DOCK LIGHT– BY DIV. 26
89. X–RAY ROOM TO BE R.F. SHIELDED PER QUALIFIED PHYSICIST CONSULTANT PRIOR TO CONSTRUCTION.
90. INTEGRAL COUNTERTOP SIDE SPLASH
91. MOP AND BROOM HOLDER RACK–SPEC. 116000
92. STEEL STRUCTURE TO SUPPORT DISSECTING STATION –BY STRUCTURAL ENGINEER
93. APPROXIMATE LOCATION OF EVAPORATING UNITS IN COLD ROOMS MOUNTED NEAR CEILING
94. SCALE POLE BRACKET–SPEC 117810
95. SPRAY HOSE ASSEMBLY – SPEC. 117800
96. MONITOR MOUNTED ON ARTICULATING SWIVEL ARM BRACKET–BY DIV. 27, WALL BLOCKING AS REQ'D
97. HYDRO ASPIRATOR – SPEC. 117810
98. STUB FOR FUTURE DIRECT EXHAUST AND SNORKEL CONNECTION– BY DIV. 23
99. 3" H X 4' W MARKER BOARD–SPEC. 101100
100. ARTICULATING MARKER BOARD–SPEC 116000
101. S.S. SHELF – 12"L x 10"D
102. S.S. SHELF – 11"D, PROVIDE HOLE IN SHELF FOR SCALE POST AND ALIGN WITH SCALE POST BRACKET
103. MATCHING BACK DRAFT WALL VENTS SUPPLIED BY DISSECTION TABLE MFR SPEC 117810 – DIV. 23 WILL CONNECT THE EXHAUST.
104. 6" INTEGRAL WALL BASE– REFER TO FINISH SCHEDULE
105. INSTRUMENT DRAWER–SPEC. 117810
106. DISPOSAL SWITCH
107. GFCI OUTLET W/ WEATHERPROOF COVER
108. 2 HP DISPOSAL– SPEC. 117810
109. END RINSE CONTROL VALVE
110. HW & CW MIXING FAUCET
111. EXHAUST VENTS BY DISSECTING STATION MFR. (8"X30") –COORDINATE DUCTWORK WITH DIV. 23
112. UV PASS–THRU CABINET WITH VISION DOORS SPEC 116000– REFER TO DETAIL 5/IL504
113. ABOVE COUNTER RECEPTACLE RECESSED INTO SERVICE CLOSURE PANEL OR CHASE– REFER TO ELECTRICAL DRAWINGS.
114. STAINLESS STEEL CANOPY–BY DIV. 23
115. CURTAIN AND TRACK– BY DIV. 10
116. MARBLE TABLE – SPEC. 116000
117. TASK LIGHT– BY DIV. 26
118. LIQUID NITROGEN DEWAR, NIC
119. 1" DIA. HOLE W/CAP FOR DI WATER DELIVERY DEVICE.
120. (2) PADLOCK RACK MOUNTED ON WALL @54" AFF AND 48" AFF
121. EXHAUST VENTS TO BE HAVE OPPOSED BLADE DAMPER ACCESSIBLE TROUGH THE FACE OF THE GRILL FOR AIR BALANCING –BY DISSECTING TABLE MFR
122. POWER FROM BELOW– BY DIV. 26
123. STUB OUT HVAC FOR FUTURE ME6
124. CURTAIN–BY DIV. 10
125. HEIGHT DETERMINED BY ME13
126. STOP REAGENT SHELF FOR TALL CABINETS
127. CONTROL FOR ME25 POWER AND DATA BY DIV. 26

CRSA
649 E. South Temple
Salt Lake City, UT 84102
801.355.5915

MWL
11798 N. Lakeridge Pkwy.
Ashland, VA 23005
804-228-7473

State of Utah
Department of Administrative Services
Division of Facilities Construction & Management
4110 State Office Building
Salt Lake City, Utah 84114
Phone: (801) 538 - 3018
Fax: (801) 538 - 3267

DFCM APPROVAL STAMP

STATE OF UTAH #134098 MEHRDAD SAMIE LICENSED ARCHITECT
04.28.2014

ARCHITECT-ENGINEER STAMP

Unified State Laboratory Module 2
4501 South 2700 West,
Taylorsville, UT 84118

KEY PLAN

DFCM #: 13020300

Project #: B13-024

DATE:	ISSUE TYPE:
APRIL 21, 2014	BID SET
MAY 8, 2015	ADD # 1

CHECKED BY	B. CARVER
DRAWN BY	B. WARRREN

2ND FLOOR ENLARGED LAB PLANS

1

IL105

VOLUME 1

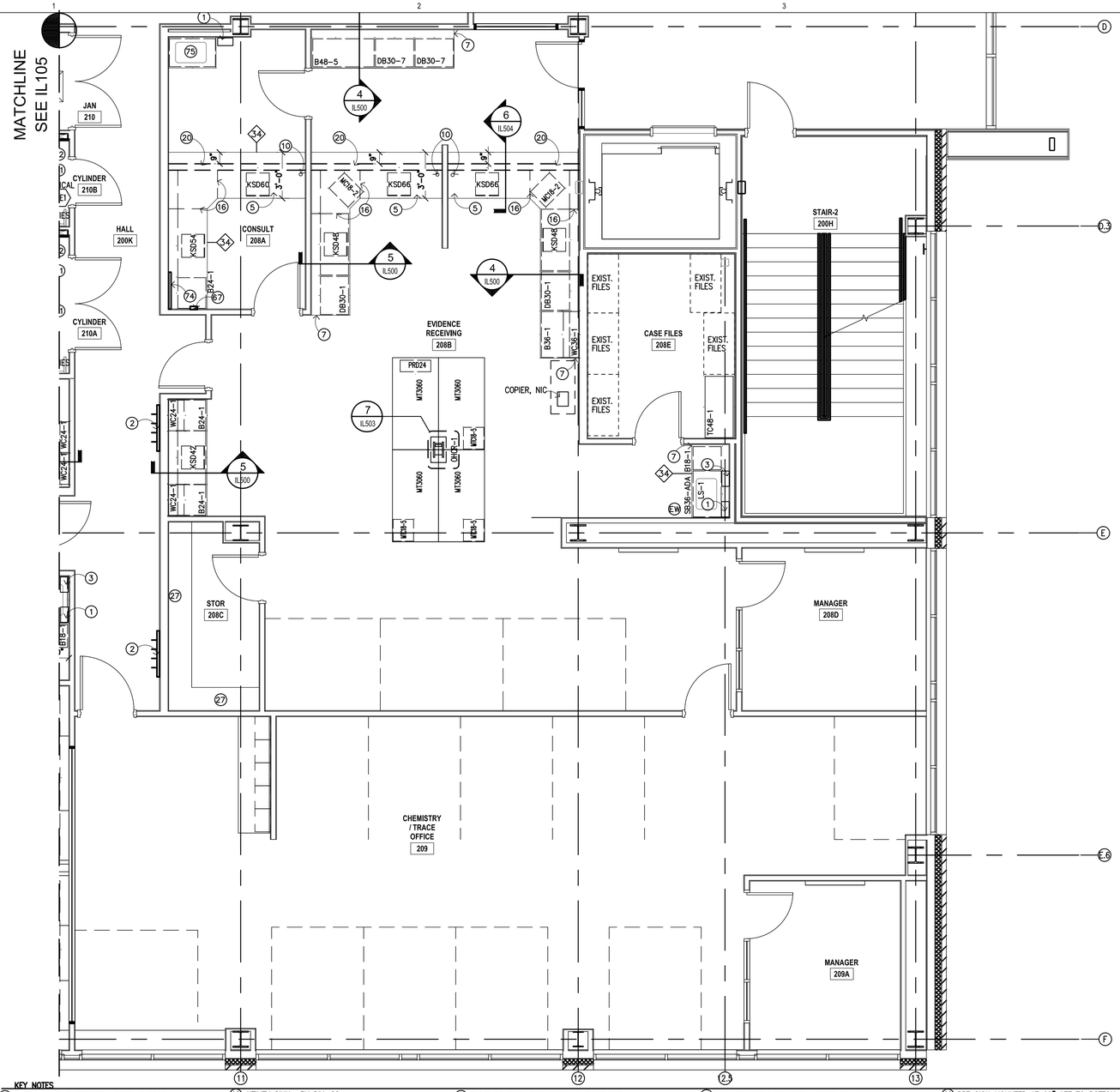

KEY SYMBOLS

- (L) LOCKING
- (M) MONITOR TO BMS
- (EW) DECK MOUNTED DRENCH HOSE EYEWASH FIXTURE
- (CA) COMPRESSED AIR
- (XX)— MARINE EDGE COUNTER ELEVATION IN INCHES
- (XX)— NON-MARINE EDGE COUNTER ELEVATION IN INCHES
- (X) KEY NOTES
- (XX) EQUIPMENT
- XXX ROOM NUMBERS

KEY NOTES

1. PAPER TOWEL DISPENSER– SPEC. 116000
2. COAT HOOK STRIP MOUNTED @54" AFF–SPEC 116000 MOUNT SINGLE HOOK @ 48" CENTERED BELOW HOOK STRIP
3. SAFETY SUPPLY CABINET, REFER TO DETAIL 7/IL505
4. 1" DIA INLET PORT FOR HYDROGEN GENERATOR SPEC 116000
5. OPEN TO FINISH WALL SURFACE
6. EPOXY DRYING RACK – 18"x36" – SPEC 123450
7. FILLER PANEL – MATCH CASEWORK MATERIAL REFER TO 4/IL510 FOR AUTOPSY END FILLER PANEL CONDITION
8. OMIT FRONT AND BACK APRON FOR 34" HIGH UNDER COUNTER EQUIPMENT.
9. SS SHELVING–SPEC 116000
10. 2 1/2" CORD GROMMET–SPEC 123450
11. CONTROL PANEL FOR FA7 (TARGET TROLLEY)
12. 2'X4' STAINLESS STEEL FOLD DOWN SURFACE – REFER TO DETAIL 8/IL507
13. COUNTERTOP MOUNTED COMPRESSED AIR (CA) TURRET
14. COLD WATER HOSE BIB @54" AFF– BY DIV. 22
15. HIGH DENSITY SHELVING– BY DIV. 10
16. KSSF SUPPORT FRAME– REFER TO DETAIL 9/IL500
17. HOT & COLD MIXING STATION–BY DIV. 22 (W/ 30' OF HOSE U.O.N)
18. MOBILE LIFT PARK
19. UTILITY SINK– BY DIV. 22
20. UNDER COUNTER KNEE WALL SUPPORT –REFER TO ARCHITECTURAL
21. SPILL CART–SPEC 116000
22. SUPPORT LEG–BY DIV. 12
23. COAT RACK & SHELF–SPEC 116000
24. WALL MOUNTED PAPER ROLL DISPENSER WITH PLASTIC LAMINATE COVERED PLYWOOD BACKBOARD. 36"HX12"H MOUNTED AT 48" AFF TO BOTTOM.
25. DOUBLE KSSF– REFER TO DETAIL 9/IL502
26. ELEVATION TRANSITION POINT
27. MILLWORK–BY DIV. 6
28. FORMALIN SPIGOT–SPEC 117810
29. UNDERCOUNTER TYPE I WATER POLISHER–BY DIV. 22
30. ALL STAINLESS STEEL CASEWORK IN AUTOPSY SUITES WILL HAVE MARINE EDGE COUNTER TOPS.
31. GAS MANIFOLD @66" A.F.F. (BOTTOM) –BY DIV. 22
32. FLOOR DRAIN– BY DIV. 22
33. DISSECTION TABLE SHELF BY MFR
34. STAINLESS STEEL SCRUB SINK– BY DIV. 22
35. LEVEL 4 BULLET RESISTANT DOOR/FRAME–SPEC 083950
36. 'IN USE' LIGHT–DETAIL–1/IL507–BY DIV. 26
37. PUMP CONTROL FOR FORMALIN DISPENSER
38. MAPLE COUNTER–2" THICK W/ 3/4" X 3 1/2" MAPLE BACK SPLASH W/ 4" LEADING EDGE OVERHANG– SPEC 123450
39. 8" DIA. EXHAUST DUCT FROM PROJECTILE RECOVERY TANK. DIV. 23 TO CONNECT EXHAUST
40. MOBILE DISSECTING WING–SPEC 117810
41. WALL MOUNTED LONG GUN RACK – REFER TO 7/IL507
42. PAINTED 3" NUMBER AND ARROW WHITE PAINT STENCILED ON RUBBER PANELS AT 1 YARD INCREMENTS MEASURED FROM THE ZERO POINT OF THE FIRING LINE. ACCURACY REQUIRED WITHIN 1/16".
43. OPEN ALL OF THE WAY THROUGH
44. GAS ANNUNCIATOR PANEL– BY DIV. 22
45. FORMALIN CONTAINER AND DISPENSING PUMP ON 18"D SHELF –SPEC 117810
46. PAINTED FIRING LINE– REFER TO DETAIL 3/IL507
47. FLUSHING FLOOR DRAIN–BY DIV. 22
48. CONTROLS FOR RANGE AIR HANDLING SYSTEM– DIV. 23
49. 36"L X 12" W X 1" THICK MAPLE WOOD SHELF MOUNT & 48" AFF–SPEC 123450
50. CW CONNECTION @ 48" A.F.F.–REFER TO PLUMB. VERIFY LOCATION BASED ON APPROVED SHOP DRAWINGS OF PRT
51. MANUAL OPERATED BLACKOUT SHADE–SPEC 122413
52. LOW ELEVATION EXHAUST– REFER TO MECHANICAL
53. BUG ZAPPER MOUNTED @ +84" A.F.F.–BY DIV 26 –SPEC 116000
54. HAMPER– NIC
55. 2–1/2" X 18" CORD SLOT
56. EXHAUST VENTS BY DISSECTING STATION MFR. (VERIFY 8"X24") –COORDINATE DUCTWORK WITH DIV. 23
57. ACID VENT PIPE– REFER TO DETAIL 2/IL500 AND MECHANICAL
58. ADJUSTABLE TOOL RACK–SPEC 114900 REFER TO DETAIL 5/IL507
59. 12"X12"X12" FLOOR SINK–BY DIV. 22
60. PRESSURE DIFFERENTIAL INDICATOR @ 54" AFF– BY DIV. 23
61. U.L. 4 BULLET RESISTANT WINDOW & FRAME– SPEC 085653
62. DIRECT CONNECT EXHAUST– BY DIV. 23
63. DIGITAL READOUT FOR SCALE–SPEC 117810
64. ACID VENT DUCT– REFER TO TACDx ELEVATION ON IL004– BY DIV. 23
65. BELOW COUNTER RECEPTACLE RECESSED INTO SERVICE CLOSURE PANEL– REFER TO ELECTRICAL DRAWINGS.
66. TRENCH DRAIN– BY DIV. 22
67. USER CONTROLLED AIR FLOW SWITCH–BY DIV. 23
68. BULLET TRAP/RANGE SIGN MOUNTED AT 60" AFF TO BOTTOM–SPEC. 114900
69. PRT SIGN MOUNTED AT 60" AFF TO BOTTOM. –SPEC. 114900
70. WALL MOUNTED FLAT PANEL MONITOR–BY DIV. 27
71. COOLER CONTROL PANEL
72. IN–WALL FLUSH VALVE FOR FLUSHING FLOOR DRAINS – BY DIV. 22
73. EXISTING AMMO STORAGE SHELVING SYSTEM TO BE RELOCATED TO NEW FACILITY BY CONTRACTOR
74. BACKDRAFT EXHAUST GRILLE– BY DIV. 23 REFER TO MECH. FOR SIZE, MOUNT ABOVE COUNTERTOP BACKSPLASH
75. ADA COMPLIANT S.S. SINK–BY DIV. 22
76. REMOVABLE EVIDENCE RACK MOUNTED TO MOBILE TABLE–REFER TO DETAIL 2/IL502–SPEC 123450
77. UMBILICAL SERVICE CHASE–SPEC 123450
78. DIRECT CONNECT PRT TO CW
79. COMPRESSED AIR– BY DIV. 23
80. TYPE 3 RO WATER FAUCET –BY DIV. 22 –COUNTER MOUNTED
81. TYPE 1 DI WATER POLISHER SPEC 116000 – WALL MOUNTED U.O.N. (BLOCKING REQUIRED)
82. GLASS WALL PANEL–REFER TO ARCH.
83. HUB DRAIN FOR BODY FREEZER CONDENSATE –BY DIV. 22
84. HUB DRAIN– BY DIV. 22
85. MONITOR AND INTERCOM TO OUTSIDE PEDESTAL – BY DIV. 26
86. S.S. WALL GUARD – REFER TO DET. 6/IL505. IN ROOMS 125, 125A AND 125B S.S. WALL GUARDS ARE TO BE BY COOLER MFR.
87. S.S. CORNER GUARD – REFER TO DET. 6/IL505
88. ADJUSTABLE DOCK LIGHT– BY DIV. 26
89. X–RAY ROOM TO BE R.F. SHIELDED PER QUALIFIED PHYSICIST CONSULTANT PRIOR TO CONSTRUCTION.
90. INTEGRAL COUNTERTOP SIDE SPLASH
91. MOP AND BROOM HOLDER RACK–SPEC. 116000
92. STEEL STRUCTURE TO SUPPORT DISSECTING STATION –BY STRUCTURAL ENGINEER
93. APPROXIMATE LOCATION OF EVAPORATING UNITS IN COLD ROOMS MOUNTED NEAR CEILING
94. SCALE POLE BRACKET–SPEC 117810
95. SPRAY HOSE ASSEMBLY – SPEC. 117800
96. MONITOR MOUNTED ON ARTICULATING SWIVEL ARM BRACKET–BY DIV. 27, WALL BLOCKING AS REQ'D
97. HYDRO ASPIRATOR – SPEC. 117810
98. STUB FOR FUTURE DIRECT EXHAUST AND SNORKEL CONNECTION– BY DIV. 23
99. 3' H X 4' W MARKER BOARD–SPEC. 101100
100. ARTICULATING MARKER BOARD–SPEC 116000
101. S.S. SHELF – 12"L x 10"D
102. S.S. SHELF – 11"D, PROVIDE HOLE IN SHELF FOR SCALE POST AND ALIGN WITH SCALE POST BRACKET
103. MATCHING BACK DRAFT WALL VENTS SUPPLIED BY DISSECTION TABLE MFR SPEC 117810 – DIV. 23 WILL CONNECT THE EXHAUST.
104. 6" INTEGRAL WALL BASE– REFER TO FINISH SCHEDULE
105. INSTRUMENT DRAWER–SPEC. 117810
106. DISPOSAL SWITCH
107. GFCI OUTLET W/ WEATHERPROOF COVER
108. 2 HP DISPOSAL– SPEC. 117810
109. END RINSE CONTROL VALVE
110. HW & CW MIXING FAUCET
111. EXHAUST VENTS BY DISSECTING STATION MFR. (8"X30") –COORDINATE DUCTWORK WITH DIV. 23
112. UV PASS–THRU CABINET WITH VISION DOORS SPEC 116000– REFER TO DETAIL 5/IL504
113. ABOVE COUNTER RECEPTACLE RECESSED INTO SERVICE CLOSURE PANEL OR CHASE– REFER TO ELECTRICAL DRAWINGS.
114. STAINLESS STEEL CANOPY–BY DIV. 23
115. CURTAIN AND TRACK– BY DIV. 10
116. MARBLE TABLE – SPEC. 116000
117. TASK LIGHT– BY DIV. 26
118. LIQUID NITROGEN DEWAR, NIC
119. 1" DIA. HOLE W/CAP FOR DI WATER DELIVERY DEVICE.
120. (2) PADLOCK RACK MOUNTED ON WALL @54" AFF AND 48" AFF
121. EXHAUST VENTS TO BE HAVE OPPOSED BLADE DAMPER ACCESSIBLE TROUGH THE FACE OF THE GRILL FOR AIR BALANCING –BY DISSECTING TABLE MFR
122. POWER FROM BELOW– BY DIV. 26
123. STUB OUT HVAC FOR FUTURE ME6
124. CURTAIN–BY DIV. 10
125. HEIGHT DETERMINED BY ME13
126. STOP REAGENT SHELF FOR TALL CABINETS
127. CONTROL FOR ME25 POWER AND DATA BY DIV. 26

CRSA
649 E. South Temple
Salt Lake City, UT 84102
801.355.5915

MWL
11798 N. Lakeridge Pkwy.
Ashland, VA 23005
804-228-7473

State of Utah
Department of Administrative Services
Division of Facilities Construction & Management
4110 State Office Building
Salt Lake City, Utah 84114
Phone: (801) 538 - 3018
Fax: (801) 538 - 3267

DFCM APPROVAL STAMP

STATE OF UTAH #134098 MEHRDAD SAMIE LICENSED ARCHITECT
04.28.2014
ARCHITECT-ENGINEER STAMP

Unified State Laboratory Module 2
4501 South 2700 West,
Taylorsville, UT 84118

KEY PLAN

DFCM #: 13020300
Project #: B13-024

DATE:	ISSUE TYPE:
APRIL 21, 2014	BID SET
MAY 8, 2015	ADD # 1

CHECKED BY: B. CARVER
DRAWN BY: B. WARRREN

2ND FLOOR ENLARGED LAB PLANS

IL106

VOLUME 1

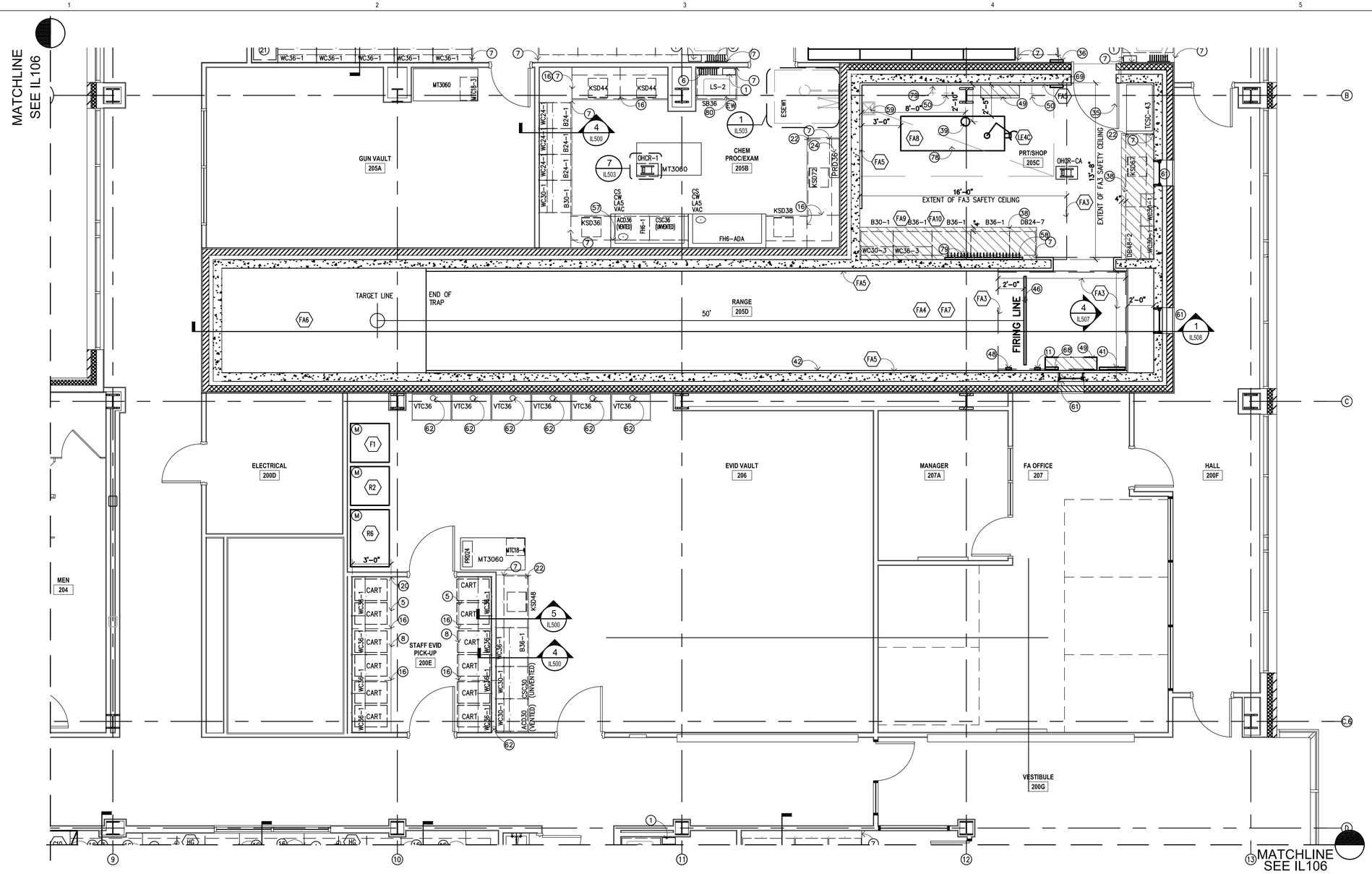

KEY SYMBOLS

- (L) LOCKING
- (M) MONITOR TO BMS
- (DM) DECK MOUNTED DRENCH HOSE EYEWASH FIXTURE
- (CA) COMPRESSED AIR
- (XX) MARINE EDGE COUNTER ELEVATION IN INCHES
- (XX) NON-MARINE EDGE COUNTER ELEVATION IN INCHES
- (X) KEY NOTES
- (XX) EQUIPMENT
- XXX ROOM NUMBERS

KEY NOTES

1. PAPER TOWEL DISPENSER– SPEC. 116000
2. COAT HOOK STRIP MOUNTED @54" AFF–SPEC 116000 MOUNT SINGLE HOOK @ 48" CENTERED BELOW HOOK STRIP
3. SAFETY SUPPLY CABINET, REFER TO DETAIL 7/IL505 SPEC 116000
4. 1" DIA INLET PORT FOR HYDROGEN GENERATOR
5. OPEN TO FINISH WALL SURFACE
6. EPOXY DRYING RACK – 18"x36" – SPEC 123450
7. FILLER PANEL – MATCH CASEWORK MATERIAL REFER TO 4/IL510 FOR AUTOPSY END FILLER PANEL CONDITION
8. OMIT FRONT AND BACK APRON FOR 34" HIGH UNDER COUNTER EQUIPMENT.
9. SS SHELVING–SPEC 116000
10. 2 1/2" CORD GROMMET–SPEC 123450
11. CONTROL PANEL FOR FA7 (TARGET TROLLEY)
12. 2'X4' STAINLESS STEEL FOLD DOWN SURFACE – REFER TO DETAIL 8/IL507
13. COUNTERTOP MOUNTED COMPRESSED AIR (CA) TURRET
14. COLD WATER HOSE BIB @54" AFF– BY DIV. 22
15. HIGH DENSITY SHELVING– BY DIV. 10
16. KSSF SUPPORT FRAME– REFER TO DETAIL 9/IL500
17. HOT & COLD MIXING STATION–BY DIV. 22 (W/ 30' OF HOSE U.O.N)
18. MOBILE LIFT PARK
19. UTILITY SINK– BY DIV. 22
20. UNDER COUNTER KNEE WALL SUPPORT –REFER TO ARCHITECTURAL
21. SPILL CART–SPEC 116000
22. SUPPORT LEG–BY DIV. 12
23. COAT RACK & SHELF–SPEC 116000
24. WALL MOUNTED PAPER ROLL DISPENSER WITH PLASTIC LAMINATE COVERED PLYWOOD BACKBOARD. 36"HX12"H MOUNTED AT 48" AFF TO BOTTOM.
25. DOUBLE KSSF– REFER TO DETAIL 9/IL502
26. ELEVATION TRANSITION POINT
27. MILLWORK–BY DIV. 6
28. FORMALIN SPIGOT–SPEC 117810
29. UNDERCOUNTER TYPE I WATER POLISHER–BY DIV. 22
30. ALL STAINLESS STEEL CASEWORK IN AUTOPSY SUITES WILL HAVE MARINE EDGE COUNTER TOPS.
31. GAS MANIFOLD @66" A.F.F. (BOTTOM) –BY DIV. 22
32. FLOOR DRAIN– BY DIV. 22
33. DISSECTION TABLE SHELF BY MFR
34. STAINLESS STEEL SCRUB SINK– BY DIV. 22
35. LEVEL 4 BULLET RESISTANT DOOR/FRAME–SPEC 083950
36. 'IN USE' LIGHT–DETAIL–1/IL507–BY DIV. 26
37. PUMP CONTROL FOR FORMALIN DISPENSER
38. MAPLE COUNTER–2" THICK W/ 3/4" X 3 1/2" MAPLE BACK SPLASH W/ 4" LEADING EDGE OVERHANG– SPEC 123450
39. 8" DIA. EXHAUST DUCT FROM PROJECTILE RECOVERY TANK. DIV. 23 TO CONNECT EXHAUST
40. MOBILE DISSECTING WING–SPEC 117810
41. WALL MOUNTED LONG GUN RACK – REFER TO 7/IL507
42. PAINTED 3" NUMBER AND ARROW WHITE PAINT STENCILED ON RUBBER PANELS AT 1 YARD INCREMENTS MEASURED FROM THE ZERO POINT OF THE FIRING LINE. ACCURACY REQUIRED WITHIN 1/16".
43. OPEN ALL OF THE WAY THROUGH
44. GAS ANNUNCIATOR PANEL– BY DIV. 22
45. FORMALIN CONTAINER AND DISPENSING PUMP ON 18"D SHELF –SPEC 117810
46. PAINTED FIRING LINE– REFER TO DETAIL 3/IL507
47. FLUSHING FLOOR DRAIN–BY DIV. 22
48. CONTROLS FOR RANGE AIR HANDLING SYSTEM– DIV. 23
49. 36"L X 12" W X 1" THICK MAPLE WOOD SHELF MOUNT @ 48" AFF–SPEC 123450
50. CW CONNECTION @ 48" A.F.F.–REFER TO PLUMB. VERIFY LOCATION BASED ON APPROVED SHOP DRAWINGS OF PRT
51. MANUAL OPERATED BLACKOUT SHADE–SPEC 122413
52. LOW ELEVATION EXHAUST– REFER TO MECHANICAL
53. BUG ZAPPER MOUNTED @ +84" A.F.F.–BY DIV 26 –SPEC 116000
54. HAMPER– NIC
55. 2–1/2" X 18" CORD SLOT
56. EXHAUST VENTS BY DISSECTING STATION MFR. (VERIFY 8"X24") –COORDINATE DUCTWORK WITH DIV. 23
57. ACID VENT PIPE– REFER TO DETAIL 2/IL500 AND MECHANICAL
58. ADJUSTABLE TOOL RACK–SPEC 114900 REFER TO DETAIL 5/IL507
59. 12"X12"X12" FLOOR SINK–BY DIV. 22
60. PRESSURE DIFFERENTIAL INDICATOR @ 54" AFF– BY DIV. 23
61. U.L. 4 BULLET RESISTANT WINDOW & FRAME– SPEC 085653
62. DIRECT CONNECT EXHAUST– BY DIV. 23
63. DIGITAL READOUT FOR SCALE–SPEC 117810
64. ACID VENT DUCT– REFER TO TACDx ELEVATION ON IL004– BY DIV. 23
65. BELOW COUNTER RECEPTACLE RECESSED INTO SERVICE CLOSURE PANEL– REFER TO ELECTRICAL DRAWINGS.
66. TRENCH DRAIN– BY DIV. 22
67. USER CONTROLLED AIR FLOW SWITCH–BY DIV. 23
68. BULLET TRAP/RANGE SIGN MOUNTED AT 60" AFF TO BOTTOM–SPEC. 114900
69. PRT SIGN MOUNTED AT 60" AFF TO BOTTOM. –SPEC. 114900
70. WALL MOUNTED FLAT PANEL MONITOR–BY DIV. 27
71. COOLER CONTROL PANEL
72. IN–WALL FLUSH VALVE FOR FLUSHING FLOOR DRAINS – BY DIV. 22
73. EXISTING AMMO STORAGE SHELVING SYSTEM TO BE RELOCATED TO NEW FACILITY BY CONTRACTOR
74. BACKDRAFT EXHAUST GRILLE– BY DIV. 23 REFER TO MECH. FOR SIZE, MOUNT ABOVE COUNTERTOP BACKSPLASH
75. ADA COMPLIANT S.S. SINK–BY DIV. 22
76. REMOVABLE EVIDENCE RACK MOUNTED TO MOBILE TABLE–REFER TO DETAIL 2/IL502–SPEC 123450
77. UMBILICAL SERVICE CHASE–SPEC 123450
78. DIRECT CONNECT PRT TO CW
79. COMPRESSED AIR– BY DIV. 23
80. TYPE 3 RO WATER FAUCET –BY DIV. 22 –COUNTER MOUNTED
81. TYPE 1 DI WATER POLISHER SPEC 116000 – WALL MOUNTED U.O.N. (BLOCKING REQUIRED)
82. GLASS WALL PANEL–REFER TO ARCH.
83. HUB DRAIN FOR BODY FREEZER CONDENSATE BY DIV. 22
84. HUB DRAIN– BY DIV. 22
85. MONITOR AND INTERCOM TO OUTSIDE PEDESTAL – BY DIV. 26
86. S.S. WALL GUARD – REFER TO DET. 6/IL505. IN ROOMS 125, 125A AND 125B S.S. WALL GUARDS ARE TO BE BY COOLER MFR.
87. S.S. CORNER GUARD – REFER TO DET. 6/IL505
88. ADJUSTABLE DOCK LIGHT– BY DIV. 26
89. X–RAY ROOM TO BE R.F. SHIELDED PER QUALIFIED PHYSICIST CONSULTANT PRIOR TO CONSTRUCTION. INTEGRAL COUNTERTOP SIDE SPLASH
90. MOP AND BROOM HOLDER RACK–SPEC. 116000
91. STEEL STRUCTURE TO SUPPORT DISSECTING STATION –BY STRUCTURAL ENGINEER
92. APPROXIMATE LOCATION OF EVAPORATING UNITS IN COLD ROOMS MOUNTED NEAR CEILING
93. SCALE POLE BRACKET–SPEC 117810
94. SPRAY HOSE ASSEMBLY – SPEC. 117800
95. MONITOR MOUNTED ON ARTICULATING SWIVEL ARM BRACKET–BY DIV. 27, WALL BLOCKING AS REQ'D
96. HYDRO ASPIRATOR – SPEC. 117810
97. STUB FOR FUTURE DIRECT EXHAUST AND SNORKEL CONNECTION– BY DIV. 23
98. 3" H X 4" W MARKER BOARD–SPEC. 101100
99. ARTICULATING MARKER BOARD–SPEC 116000
100. S.S. SHELF – 12"L x 10"D
101. S.S. SHELF – 11"D, PROVIDE HOLE IN SHELF FOR SCALE POST AND ALIGN WITH SCALE POST BRACKET
102. MATCHING BACK DRAFT WALL VENTS SUPPLIED BY DISSECTION TABLE MFR SPEC 117810 – DIV. 23 WILL CONNECT THE EXHAUST.
103. 6" INTEGRAL WALL BASE– REFER TO FINISH SCHEDULE
104. INSTRUMENT DRAWER–SPEC. 117810
105. DISPOSAL SWITCH
106. GFCI OUTLET W/ WEATHERPROOF COVER
107. 2 HP DISPOSAL– SPEC. 117810
108. END RINSE CONTROL VALVE
109. HW & CW MIXING FAUCET
110. EXHAUST VENTS BY DISSECTING STATION MFR. (8"X30") –COORDINATE DUCTWORK WITH DIV. 23
111. UV PASS–THRU CABINET WITH VISION DOORS SPEC 116000– REFER TO DETAIL 5/IL504
112. ABOVE COUNTER RECEPTACLE RECESSED INTO SERVICE CLOSURE PANEL OR CHASE– REFER TO ELECTRICAL DRAWINGS.
113. STAINLESS STEEL CANOPY–BY DIV. 23
114. CURTAIN AND TRACK– BY DIV. 10
115. MARBLE TABLE – SPEC. 116000
116. TASK LIGHT– BY DIV. 26
117. LIQUID NITROGEN DEWAR, NIC
118. 1" DIA. HOLE W/CAP FOR DI WATER DELIVERY DEVICE.
119. (2) PADLOCK RACK MOUNTED ON WALL @54" AFF AND 48" AFF
120. EXHAUST VENTS TO BE HAVE OPPOSED BLADE DAMPER ACCESSIBLE TROUGH THE FACE OF THE GRILL FOR AIR BALANCING –BY DISSECTING TABLE MFR
121. POWER FROM BELOW– BY DIV. 26
122. STUB OUT HVAC FOR FUTURE ME6
123. CURTAIN–BY DIV. 10
124. HEIGHT DETERMINED BY ME13
125. STOP REAGENT SHELF FOR TALL CABINETS
126. CONTROL FOR ME25 POWER AND DATA BY DIV. 26

CRSA
649 E. South Temple
Salt Lake City, UT 84102
801.355.5915

MWL
11798 N. Lakeridge Pkwy.
Ashland, VA 23005
804-228-7473

State of Utah
Department of Administrative Services
Division of Facilities Construction & Management
4110 State Office Building
Salt Lake City, Utah 84114
Phone: (801) 538 - 3018
Fax: (801) 538 - 3267

DFCM APPROVAL STAMP

STATE OF UTAH #134098 MEHRDAD SAMII LICENSED ARCHITECT
04.28.2014
ARCHITECT-ENGINEER STAMP

Unified State Laboratory Module 2
4501 South 2700 West,
Taylorsville, UT 84118

KEY PLAN

DFCM #: 13020300
Project #: B13-024

DATE:	ISSUE TYPE:
APRIL 21, 2014	BID SET
MAY 8, 2015	ADD # 1

CHECKED BY: B. CARVER
DRAWN BY: B. WARRREN

2ND FLOOR ENLARGED LAB PLANS

IL107

VOLUME 1

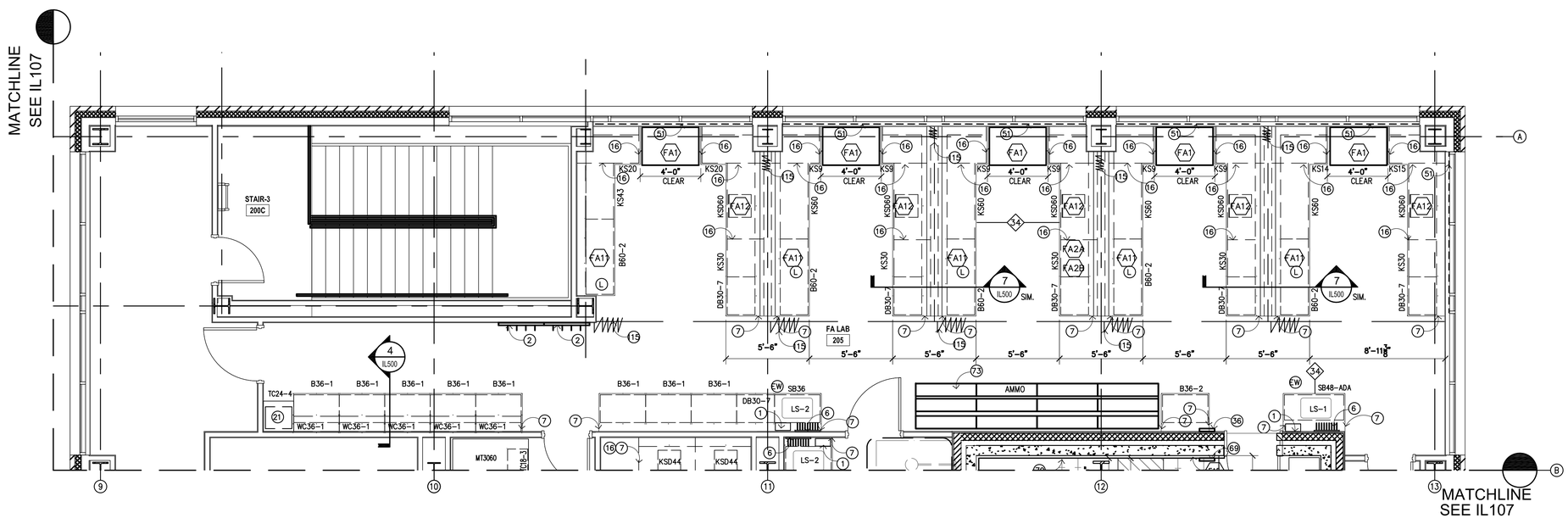

KEY SYMBOLS

- (L) LOCKING
- (M) MONITOR TO BMS
- (EW) DECK MOUNTED DRENCH HOSE EYEWASH FIXTURE
- (CA) COMPRESSED AIR
- (XXX) MARINE EDGE COUNTER ELEVATION IN INCHES
- (XX) NON-MARINE EDGE COUNTER ELEVATION IN INCHES
- (X) KEY NOTES
- (XX) EQUIPMENT
- XXX ROOM NUMBERS

KEY NOTES

1. PAPER TOWEL DISPENSER- SPEC. 116000
2. COAT HOOK STRIP MOUNTED @54" AFF-SPEC 116000 MOUNT SINGLE HOOK @ 48" CENTERED BELOW HOOK STRIP
3. SAFETY SUPPLY CABINET, REFER TO DETAIL 7/IL505 SPEC 116000
4. 1" DIA INLET PORT FOR HYDROGEN GENERATOR
5. OPEN TO FINISH WALL SURFACE
6. EPOXY DRYING RACK – 18"x36" – SPEC 123450
7. FILLER PANEL – MATCH CASEWORK MATERIAL REFER TO 4/IL510 FOR AUTOPSY END FILLER PANEL CONDITION
8. OMIT FRONT AND BACK APRON FOR 34" HIGH UNDER COUNTER EQUIPMENT.
9. SS SHELVING-SPEC 116000
10. 2 1/2" CORD GROMMET-SPEC 123450
11. CONTROL PANEL FOR FA7 (TARGET TROLLEY)
12. 2'X4' STAINLESS STEEL FOLD DOWN SURFACE – REFER TO DETAIL 8/IL507
13. COUNTERTOP MOUNTED COMPRESSED AIR (CA) TURRET
14. COLD WATER HOSE BIB @54" AFF- BY DIV. 22
15. HIGH DENSITY SHELVING- BY DIV. 10
16. KSSF SUPPORT FRAME- REFER TO DETAIL 9/IL500
17. HOT & COLD MIXING STATION-BY DIV. 22 (W/ 30' OF HOSE U.O.N)
18. MOBILE LIFT PARK
19. UTILITY SINK- BY DIV. 22
20. UNDER COUNTER KNEE WALL SUPPORT –REFER TO ARCHITECTURAL
21. SPILL CART-SPEC 116000
22. SUPPORT LEG-BY DIV. 12
23. COAT RACK & SHELF-SPEC 116000
24. WALL MOUNTED PAPER ROLL DISPENSER WITH PLASTIC LAMINATE COVERED PLYWOOD BACKBOARD. 36"HX12"H MOUNTED AT 48" AFF TO BOTTOM.
25. DOUBLE KSSF- REFER TO DETAIL 9/IL502
26. ELEVATION TRANSITION POINT
27. MILLWORK-BY DIV. 6
28. FORMALIN SPIGOT-SPEC 117810
29. UNDERCOUNTER TYPE I WATER POLISHER-BY DIV. 22
30. ALL STAINLESS STEEL CASEWORK IN AUTOPSY SUITES WILL HAVE MARINE EDGE COUNTER TOPS.
31. GAS MANIFOLD @66" A.F.F. (BOTTOM) –BY DIV. 22
32. FLOOR DRAIN- BY DIV. 22
33. DISSECTION TABLE SHELF BY MFR
34. STAINLESS STEEL SCRUB SINK- BY DIV. 22
35. LEVEL 4 BULLET RESISTANT DOOR/FRAME-SPEC 083950
36. 'IN USE' LIGHT-DETAIL-1/IL507-BY DIV. 26
37. PUMP CONTROL FOR FORMALIN DISPENSER
38. MAPLE COUNTER-2" THICK W/ 3/4" X 3 1/2" MAPLE BACK SPLASH W/ 4" LEADING EDGE OVERHANG- SPEC 123450
39. 8" DIA. EXHAUST DUCT FROM PROJECTILE RECOVERY TANK. DIV. 23 TO CONNECT EXHAUST
40. MOBILE DISSECTING WING-SPEC 117810
41. WALL MOUNTED LONG GUN RACK – REFER TO 7/IL507
42. PAINTED 3" NUMBER AND ARROW WHITE PAINT STENCILED ON RUBBER PANELS AT 1 YARD INCREMENTS MEASURED FROM THE ZERO POINT OF THE FIRING LINE. ACCURACY REQUIRED WITHIN 1/16".
43. OPEN ALL OF THE WAY THROUGH
44. GAS ANNUNCIATOR PANEL- BY DIV. 22
45. FORMALIN CONTAINER AND DISPENSING PUMP ON 18"D SHELF –SPEC 117810
46. PAINTED FIRING LINE- REFER TO DETAIL 3/IL507
47. FLUSHING FLOOR DRAIN-BY DIV. 22
48. CONTROLS FOR RANGE AIR HANDLING SYSTEM- DIV. 23
49. 36"L X 12" W X 1" THICK MAPLE WOOD SHELF MOUNT & 48" AFF-SPEC 123450
50. CW CONNECTION @ 48" A.F.F.-REFER TO PLUMB. VERIFY LOCATION BASED ON APPROVED SHOP DRAWINGS OF PRT
51. MANUAL OPERATED BLACKOUT SHADE-SPEC 122413
52. LOW ELEVATION EXHAUST- REFER TO MECHANICAL
53. BUG ZAPPER MOUNTED @ +84" A.F.F.-BY DIV 26 –SPEC 116000
54. HAMPER- NIC
55. 2-1/2" X 18" CORD SLOT
56. EXHAUST VENTS BY DISSECTING STATION MFR. (VERIFY 8"X24") –COORDINATE DUCTWORK WITH DIV. 23
57. ACID VENT PIPE- REFER TO DETAIL 2/IL500 AND MECHANICAL
58. ADJUSTABLE TOOL RACK-SPEC 114900 REFER TO DETAIL 5/IL507
59. 12"X12"X12" FLOOR SINK-BY DIV. 22
60. PRESSURE DIFFERENTIAL INDICATOR @ 54" AFF- BY DIV. 23
61. U.L. 4 BULLET RESISTANT WINDOW & FRAME- SPEC 085653
62. DIRECT CONNECT EXHAUST- BY DIV. 23
63. DIGITAL READOUT FOR SCALE-SPEC 117810
64. ACID VENT DUCT- REFER TO TACDx ELEVATION ON IL004- BY DIV. 23
65. BELOW COUNTER RECEPTACLE RECESSED INTO SERVICE CLOSURE PANEL- REFER TO ELECTRICAL DRAWINGS.
66. TRENCH DRAIN- BY DIV. 22
67. USER CONTROLLED AIR FLOW SWITCH-BY DIV. 23
68. BULLET TRAP/RANGE SIGN MOUNTED AT 60" AFF TO BOTTOM-SPEC. 114900
69. PRT SIGN MOUNTED AT 60" AFF TO BOTTOM. –SPEC. 114900
70. WALL MOUNTED FLAT PANEL MONITOR-BY DIV. 27
71. COOLER CONTROL PANEL
72. IN-WALL FLUSH VALVE FOR FLUSHING FLOOR DRAINS – BY DIV. 22
73. EXISTING AMMO STORAGE SHELVING SYSTEM TO BE RELOCATED TO NEW FACILITY BY CONTRACTOR
74. BACKDRAFT EXHAUST GRILLE– BY DIV. 23 REFER TO MECH. FOR SIZE, MOUNT ABOVE COUNTERTOP BACKSPLASH
75. ADA COMPLIANT S.S. SINK-BY DIV. 22
76. REMOVABLE EVIDENCE RACK MOUNTED TO MOBILE TABLE-REFER TO DETAIL 2/IL502-SPEC 123450
77. UMBILICAL SERVICE CHASE-SPEC 123450
78. DIRECT CONNECT PRT TO CW
79. COMPRESSED AIR– BY DIV. 23
80. TYPE 3 RO WATER FAUCET –BY DIV. 22 –COUNTER MOUNTED
81. TYPE 1 DI WATER POLISHER SPEC 116000 – WALL MOUNTED U.O.N. (BLOCKING REQUIRED)
82. GLASS WALL PANEL-REFER TO ARCH.
83. HUB DRAIN FOR BODY FREEZER CONDENSATE BY DIV. 22
84. HUB DRAIN– BY DIV. 22
85. MONITOR AND INTERCOM TO OUTSIDE PEDESTAL – BY DIV. 26
86. S.S. WALL GUARD – REFER TO DET. 6/IL505. IN ROOMS 125, 125A AND 125B S.S. WALL GUARDS ARE TO BE BY COOLER MFR.
87. S.S. CORNER GUARD – REFER TO DET. 6/IL505
88. ADJUSTABLE DOCK LIGHT- BY DIV. 26
89. X-RAY ROOM TO BE R.F. SHIELDED PER QUALIFIED PHYSICIST CONSULTANT PRIOR TO CONSTRUCTION.
90. INTEGRAL COUNTERTOP SIDE SPLASH
91. MOP AND BROOM HOLDER RACK-SPEC. 116000
92. STEEL STRUCTURE TO SUPPORT DISSECTING STATION –BY STRUCTURAL ENGINEER
93. APPROXIMATE LOCATION OF EVAPORATING UNITS IN COLD ROOMS MOUNTED NEAR CEILING
94. SCALE POLE BRACKET-SPEC 117810
95. SPRAY HOSE ASSEMBLY – SPEC. 117800
96. MONITOR MOUNTED ON ARTICULATING SWIVEL ARM BRACKET-BY DIV. 27, WALL BLOCKING AS REQ'D
97. HYDRO ASPIRATOR – SPEC. 117810
98. STUB FOR FUTURE DIRECT EXHAUST AND SNORKEL CONNECTION– BY DIV. 23
99. 3' H X 4' W MARKER BOARD-SPEC. 101100
100. ARTICULATING MARKER BOARD-SPEC 116000
101. S.S. SHELF – 12"L x 10"D
102. S.S. SHELF – 11"D, PROVIDE HOLE IN SHELF FOR SCALE POST AND ALIGN WITH SCALE POST BRACKET
103. MATCHING BACK DRAFT WALL VENTS SUPPLIED BY DISSECTION TABLE MFR SPEC 117810 – DIV. 23 WILL CONNECT THE EXHAUST.
104. 6" INTEGRAL WALL BASE- REFER TO FINISH SCHEDULE
105. INSTRUMENT DRAWER-SPEC. 117810
106. DISPOSAL SWITCH
107. GFCI OUTLET W/ WEATHERPROOF COVER
108. 2 HP DISPOSAL- SPEC. 117810
109. END RINSE CONTROL VALVE
110. HW & CW MIXING FAUCET
111. EXHAUST VENTS BY DISSECTING STATION MFR. (8"X30") –COORDINATE DUCTWORK WITH DIV. 23
112. UV PASS-THRU CABINET WITH VISION DOORS SPEC 116000– REFER TO DETAIL 5/IL504
113. ABOVE COUNTER RECEPTACLE RECESSED INTO SERVICE CLOSURE PANEL OR CHASE- REFER TO ELECTRICAL DRAWINGS.
114. STAINLESS STEEL CANOPY-BY DIV. 23
115. CURTAIN AND TRACK- BY DIV. 10
116. MARBLE TABLE – SPEC. 116000
117. TASK LIGHT- BY DIV. 26
118. LIQUID NITROGEN DEWAR, NIC
119. 1" DIA. HOLE W/CAP FOR DI WATER DELIVERY DEVICE.
120. (2) PADLOCK RACK MOUNTED ON WALL @54" AFF AND 48" AFF.
121. EXHAUST VENTS TO BE HAVE OPPOSED BLADE DAMPER ACCESSIBLE TROUGH THE FACE OF THE GRILL FOR AIR BALANCING –BY DISSECTING TABLE MFR
122. POWER FROM BELOW- BY DIV. 26
123. STUB OUT HVAC FOR FUTURE ME6
124. CURTAIN-BY DIV. 10
125. HEIGHT DETERMINED BY ME13
126. STOP REAGENT SHELF FOR TALL CABINETS
127. CONTROL FOR ME25 POWER AND DATA BY DIV. 26

CRSA
649 E. South Temple
Salt Lake City, UT 84102
801.355.5915

MWL
11798 N. Lakeridge Pkwy.
Ashland, VA 23005
804-228-7473

State of Utah
Department of Administrative Services
Division of Facilities Construction & Management
4110 State Office Building
Salt Lake City, Utah 84114
Phone: (801) 538 - 3018
Fax: (801) 538 - 3267

DFCM APPROVAL STAMP

STATE OF UTAH #134098 MEHRDAD SAMIE LICENSED ARCHITECT
04.28.2014

ARCHITECT-ENGINEER STAMP

Unified State Laboratory Module 2
4501 South 2700 West,
Taylorsville, UT 84118

KEY PLAN

DFCM #: 13020300

Project #: B13-024

DATE:	ISSUE TYPE:
APRIL 21, 2014	BID SET
MAY 8, 2015	ADD # 1

CHECKED BY: B. CARVER

DRAWN BY: B. WARRREN

2ND FLOOR ENLARGED LAB PLANS

1

IL108

VOLUME 1

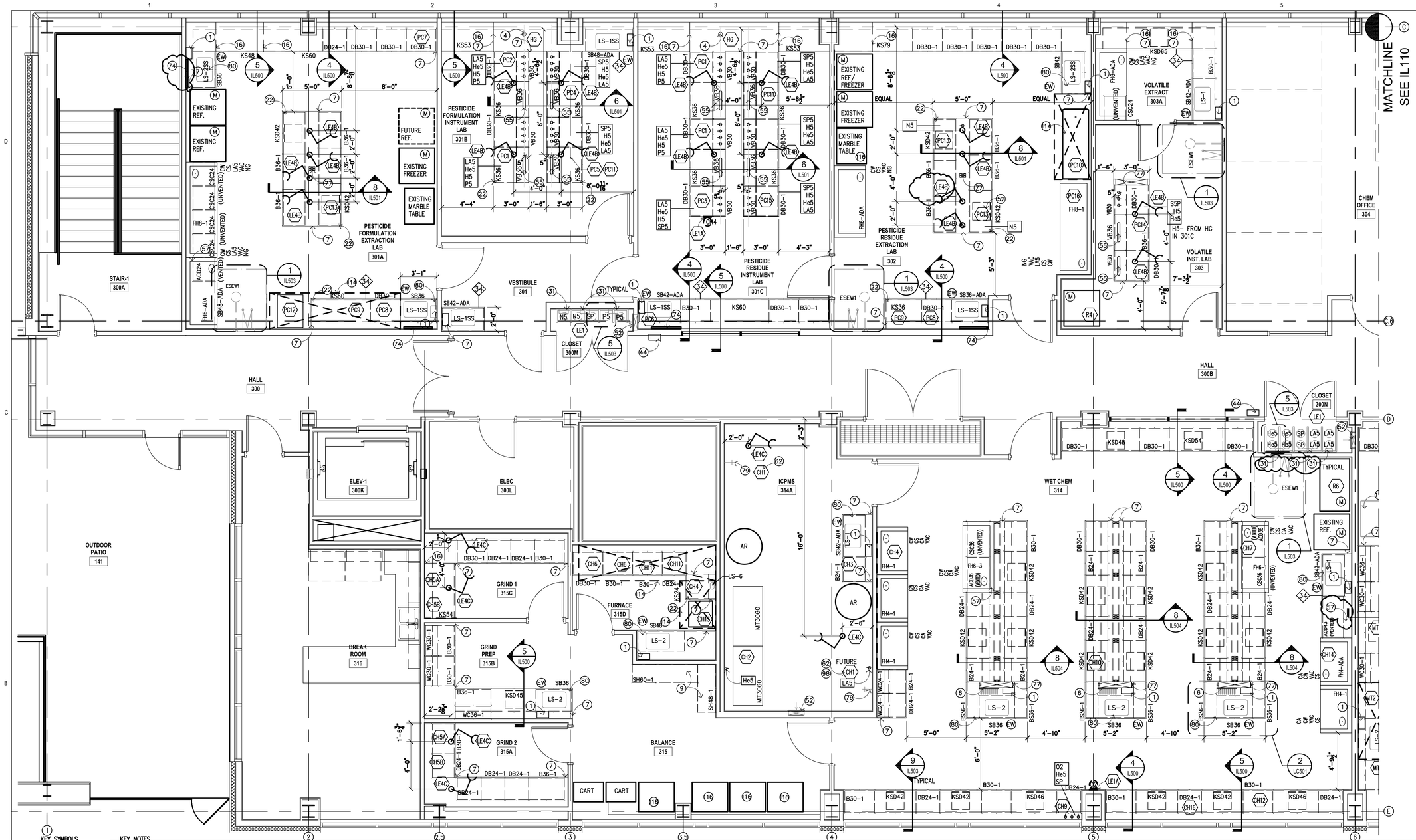

KEY SYMBOLS

- (L) LOCKING
- (M) MONITOR TO BMS
- (EW) DECK MOUNTED DRENCH HOSE EYEWASH FIXTURE
- (CA) COMPRESSED AIR
- (XXA) MARINE EDGE COUNTER ELEVATION IN INCHES
- (XX) NON-MARINE EDGE COUNTER ELEVATION IN INCHES
- (X) KEY NOTES
- (XX) EQUIPMENT
- XXX ROOM NUMBERS

KEY NOTES

1. PAPER TOWEL DISPENSER– SPEC. 116000
2. COAT HOOK STRIP MOUNTED @54" AFF–SPEC 116000 MOUNT SINGLE HOOK @ 48" CENTERED BELOW HOOK STRIP
3. SAFETY SUPPLY CABINET, REFER TO DETAIL 7/IL505 SPEC 116000
4. 1" DIA INLET PORT FOR HYDROGEN GENERATOR
5. OPEN TO FINISH WALL SURFACE
6. EPOXY DRYING RACK – 18"x36" – SPEC 123450
7. FILLER PANEL – MATCH CASEWORK MATERIAL REFER TO 4/IL510 FOR AUTOPSY END FILLER PANEL CONDITION
8. OMIT FRONT AND BACK APRON FOR 34" HIGH UNDER COUNTER EQUIPMENT.
9. SS SHELVING–SPEC 116000
10. 2 1/2" CORD GROMMET–SPEC 123450
11. CONTROL PANEL FOR FA7 (TARGET TROLLEY)
12. 2'X4' STAINLESS STEEL FOLD DOWN SURFACE – REFER TO DETAIL 8/IL507
13. COUNTERTOP MOUNTED COMPRESSED AIR (CA) TURRET
14. COLD WATER HOSE BIB @54" AFF– BY DIV. 22
15. HIGH DENSITY SHELVING– BY DIV. 10
16. KSSF SUPPORT FRAME– REFER TO DETAIL 9/IL500
17. HOT & COLD MIXING STATION–BY DIV. 22 (W/ 30" OF HOSE U.O.N)
18. MOBILE LIFT PARK
19. UTILITY SINK– BY DIV. 22
20. UNDER COUNTER KNEE WALL SUPPORT –REFER TO ARCHITECTURAL
21. SPILL CART–SPEC 116000
22. SUPPORT LEG–BY DIV. 12
23. COAT RACK & SHELF–SPEC 116000
24. WALL MOUNTED PAPER ROLL DISPENSER WITH PLASTIC LAMINATE COVERED PLYWOOD BACKBOARD. 36"HX12"H MOUNTED AT 48" AFF TO BOTTOM.
25. DOUBLE KSSF– REFER TO DETAIL 9/IL502
26. ELEVATION TRANSITION POINT
27. MILLWORK–BY DIV. 6
28. FORMALIN SPIGOT–SPEC 117810
29. UNDERCOUNTER TYPE I WATER POLISHER–BY DIV. 22
30. ALL STAINLESS STEEL CASEWORK IN AUTOPSY SUITES WILL HAVE MARINE EDGE COUNTER TOPS.
31. GAS MANIFOLD @66" A.F.F. (BOTTOM) –BY DIV. 22
32. FLOOR DRAIN– BY DIV. 22
33. DISSECTION TABLE SHELF BY MFR
34. STAINLESS STEEL SCRUB SINK– BY DIV. 22
35. LEVEL 4 BULLET RESISTANT DOOR/FRAME–SPEC 083950
36. 'IN USE' LIGHT–DETAIL–1/IL507–BY DIV. 26
37. PUMP CONTROL FOR FORMALIN DISPENSER
38. MAPLE COUNTER–2" THICK W/ 3/4" X 3 1/2" MAPLE BACK SPLASH W/ 4" LEADING EDGE OVERHANG– SPEC 123450
39. 8" DIA. EXHAUST DUCT FROM PROJECTILE RECOVERY TANK. DIV. 23 TO CONNECT EXHAUST
40. MOBILE DISSECTING WING–SPEC 117810
41. WALL MOUNTED LONG GUN RACK – REFER TO 7/IL507
42. PAINTED 3" NUMBER AND ARROW WHITE PAINT STENCILED ON RUBBER PANELS AT 1 YARD INCREMENTS MEASURED FROM THE ZERO POINT OF THE FIRING LINE. ACCURACY REQUIRED WITHIN 1/16".
43. OPEN ALL OF THE WAY THROUGH
44. GAS ANNUNCIATOR PANEL– BY DIV. 22
45. FORMALIN CONTAINER AND DISPENSING PUMP ON 18"D SHELF –SPEC 117810
46. PAINTED FIRING LINE– REFER TO DETAIL 3/IL507
47. FLUSHING FLOOR DRAIN–BY DIV. 22
48. CONTROLS FOR RANGE AIR HANDLING SYSTEM– DIV. 23
49. 36"L X 12" W X 1" THICK MAPLE WOOD SHELF MOUNT & 48" AFF–SPEC 123450
50. CW CONNECTION @ 48" A.F.F.–REFER TO PLUMB. VERIFY LOCATION BASED ON APPROVED SHOP DRAWINGS OF PRT
51. MANUAL OPERATED BLACKOUT SHADE–SPEC 122413
52. LOW ELEVATION EXHAUST– REFER TO MECHANICAL
53. BUG ZAPPER MOUNTED @ +84" A.F.F.–BY DIV 26 –SPEC 116000
54. HAMPER– NIC
55. 2–1/2" X 18" CORD SLOT
56. EXHAUST VENTS BY DISSECTING STATION MFR. (VERIFY 8"X24") –COORDINATE DUCTWORK WITH DIV. 23
57. ACID VENT PIPE– REFER TO DETAIL 2/IL500 AND MECHANICAL
58. ADJUSTABLE TOOL RACK–SPEC 114900 REFER TO DETAIL 5/IL507
59. 12"X12"X12" FLOOR SINK–BY DIV. 22
60. PRESSURE DIFFERENTIAL INDICATOR @ 54" AFF– BY DIV. 23
61. U.L. 4 BULLET RESISTANT WINDOW & FRAME– SPEC 085653
62. DIRECT CONNECT EXHAUST– BY DIV. 23
63. DIGITAL READOUT FOR SCALE–SPEC 117810
64. ACID VENT DUCT– REFER TO TACDx ELEVATION ON IL004– BY DIV. 23
65. BELOW COUNTER RECEPTACLE RECESSED INTO SERVICE CLOSURE PANEL– REFER TO ELECTRICAL DRAWINGS.
66. TRENCH DRAIN– BY DIV. 22
67. USER CONTROLLED AIR FLOW SWITCH–BY DIV. 23
68. BULLET TRAP/RANGE SIGN MOUNTED AT 60" AFF TO BOTTOM–SPEC. 114900
69. PRT SIGN MOUNTED AT 60" AFF TO BOTTOM. –SPEC. 114900
70. WALL MOUNTED FLAT PANEL MONITOR–BY DIV. 27
71. COOLER CONTROL PANEL
72. IN–WALL FLUSH VALVE FOR FLUSHING FLOOR DRAINS – BY DIV. 22
73. EXISTING AMMO STORAGE SHELVING SYSTEM TO BE RELOCATED TO NEW FACILITY BY CONTRACTOR
74. BACKDRAFT EXHAUST GRILLE– BY DIV. 23 REFER TO MECH. FOR SIZE, MOUNT ABOVE COUNTERTOP BACKSPLASH
75. ADA COMPLIANT S.S. SINK–BY DIV. 22
76. REMOVABLE EVIDENCE RACK MOUNTED TO MOBILE TABLE–REFER TO DETAIL 2/IL502–SPEC 123450
77. UMBILICAL SERVICE CHASE–SPEC 123450
78. DIRECT CONNECT PRT TO CW
79. COMPRESSED AIR– BY DIV. 23
80. TYPE 3 RO WATER FAUCET –BY DIV. 22 –COUNTER MOUNTED
81. TYPE 1 DI WATER POLISHER SPEC 116000 – WALL MOUNTED U.O.N. (BLOCKING REQUIRED)
82. GLASS WALL PANEL–REFER TO ARCH.
83. HUB DRAIN FOR BODY FREEZER CONDENSATE BY DIV. 22
84. HUB DRAIN– BY DIV. 22
85. MONITOR AND INTERCOM TO OUTSIDE PEDESTAL – BY DIV. 26
86. S.S. WALL GUARD – REFER TO DET. 6/IL505. IN ROOMS 125, 125A AND 125B S.S. WALL GUARDS ARE TO BE BY COOLER MFR.
87. S.S. CORNER GUARD – REFER TO DET. 6/IL505
88. ADJUSTABLE DOCK LIGHT– BY DIV. 26
89. X–RAY ROOM TO BE R.F. SHIELDED PER QUALIFIED PHYSICIST CONSULTANT PRIOR TO CONSTRUCTION.
90. INTEGRAL COUNTERTOP SIDE SPLASH
91. MOP AND BROOM HOLDER RACK–SPEC. 116000
92. STEEL STRUCTURE TO SUPPORT DISSECTING STATION –BY STRUCTURAL ENGINEER
93. APPROXIMATE LOCATION OF EVAPORATING UNITS IN COLD ROOMS MOUNTED NEAR CEILING
94. SCALE POLE BRACKET–SPEC 117810
95. SPRAY HOSE ASSEMBLY – SPEC. 117800
96. MONITOR MOUNTED ON ARTICULATING SWIVEL ARM BRACKET–BY DIV. 27, WALL BLOCKING AS REQ'D
97. HYDRO ASPIRATOR – SPEC. 117810
98. STUB FOR FUTURE DIRECT EXHAUST AND SNORKEL CONNECTION– BY DIV. 23
99. 3' H X 4' W MARKER BOARD–SPEC. 101100
100. ARTICULATING MARKER BOARD–SPEC 116000
101. S.S. SHELF – 12"L x 10"D
102. S.S. SHELF – 11"D, PROVIDE HOLE IN SHELF FOR SCALE POST AND ALIGN WITH SCALE POST BRACKET
103. MATCHING BACK DRAFT WALL VENTS SUPPLIED BY DISSECTION TABLE MFR SPEC 117810 – DIV. 23 WILL CONNECT THE EXHAUST.
104. 6" INTEGRAL WALL BASE– REFER TO FINISH SCHEDULE
105. INSTRUMENT DRAWER–SPEC. 117810
106. DISPOSAL SWITCH
107. GFCI OUTLET W/ WEATHERPROOF COVER
108. 2 HP DISPOSAL– SPEC. 117810
109. END RINSE CONTROL VALVE
110. HW & CW MIXING FAUCET
111. EXHAUST VENTS BY DISSECTING STATION MFR. (8"X30") –COORDINATE DUCTWORK WITH DIV. 23
112. UV PASS–THRU CABINET WITH VISION DOORS SPEC 116000– REFER TO DETAIL 5/IL504
113. ABOVE COUNTER RECEPTACLE RECESSED INTO SERVICE CLOSURE PANEL OR CHASE– REFER TO ELECTRICAL DRAWINGS.
114. STAINLESS STEEL CANOPY–BY DIV. 23
115. CURTAIN AND TRACK– BY DIV. 10
116. MARBLE TABLE – SPEC. 116000
117. TASK LIGHT– BY DIV. 26
118. LIQUID NITROGEN DEWAR, NIC
119. 1" DIA. HOLE W/CAP FOR DI WATER DELIVERY DEVICE.
120. (2) PADLOCK RACK MOUNTED ON WALL @54" AFF AND 48" AFF
121. EXHAUST VENTS TO BE HAVE OPPOSED BLADE DAMPER ACCESSIBLE TROUGH THE FACE OF THE GRILL FOR AIR BALANCING –BY DISSECTING TABLE MFR
122. POWER FROM BELOW– BY DIV. 26
123. STUB OUT HVAC FOR FUTURE ME6
124. CURTAIN–BY DIV. 10
125. HEIGHT DETERMINED BY ME13
126. STOP REAGENT SHELF FOR TALL CABINETS
127. CONTROL FOR ME25 POWER AND DATA BY DIV. 26

CRSA
649 E. South Temple
Salt Lake City, UT 84102
801.355.5915

MWL
11798 N. Lakeridge Pkwy.
Ashland, VA 23005
804-228-7473

State of Utah
Department of Administrative Services
Division of Facilities Construction & Management
4110 State Office Building
Salt Lake City, Utah 84114
Phone: (801) 538 - 3018
Fax: (801) 538 - 3267

DFCM APPROVAL STAMP

STATE OF UTAH #134086 MEHRDAD SAMIE LICENSED ARCHITECT
04.28.2014

ARCHITECT-ENGINEER STAMP

Unified State Laboratory Module 2

4501 South 2700 West, Taylorsville, UT 84118

KEY PLAN

DFCM #: 13020300

Project #: B13-024

DATE:	ISSUE TYPE:
APRIL 21, 2014	BID SET
MAY 8, 2015	ADD # 1

CHECKED BY: B. CARVER

DRAWN BY: B. WARRREN

3RD FLOOR ENLARGED LAB PLANS

1

IL109

VOLUME 1

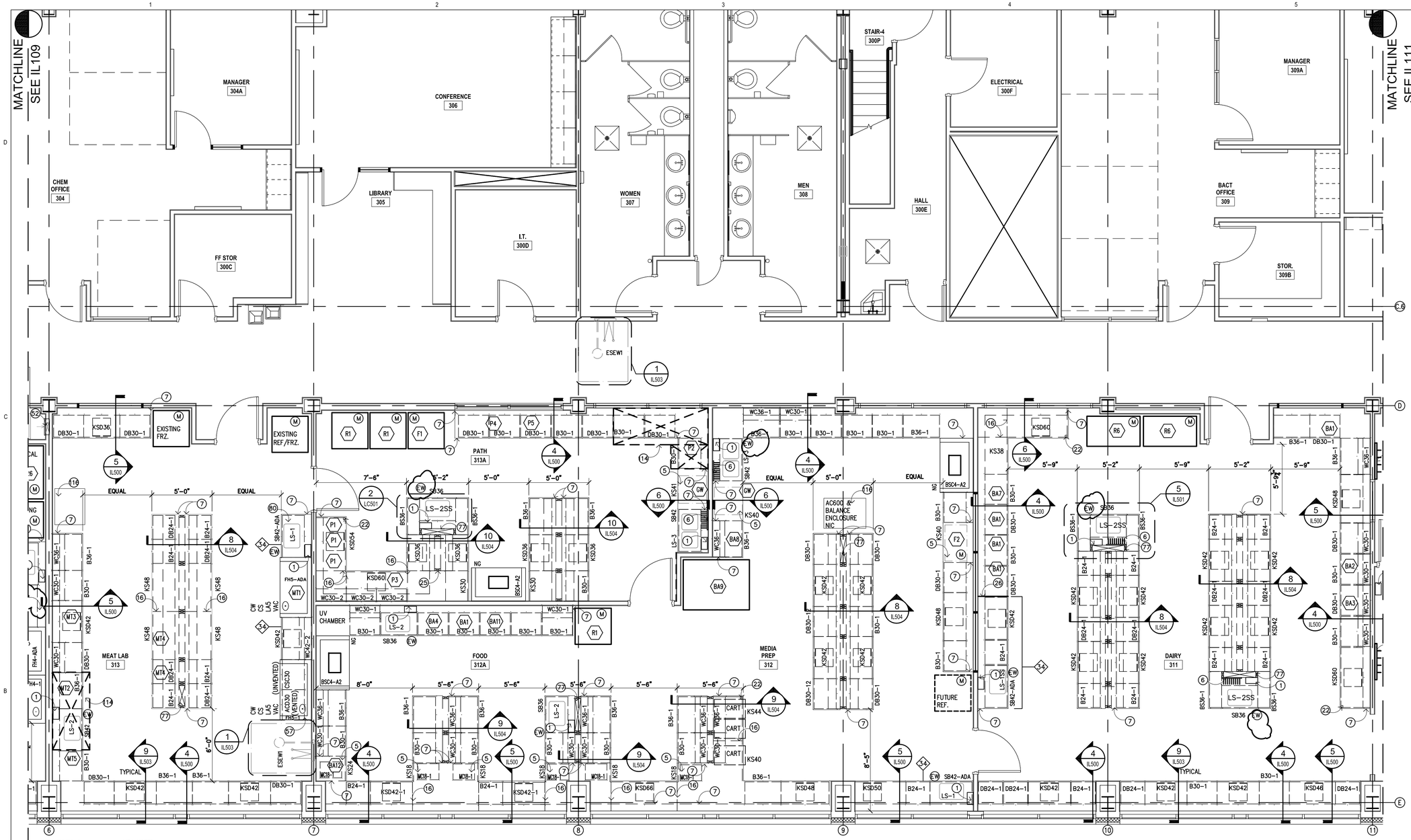

KEY SYMBOLS

- (L) LOCKING
- (M) MONITOR TO BMS
- (EW) DECK MOUNTED DRENCH HOSE EYEWASH FIXTURE
- (CA) COMPRESSED AIR
- (XX) MARINE EDGE COUNTER ELEVATION IN INCHES
- (XX) NON-MARINE EDGE COUNTER ELEVATION IN INCHES
- (X) KEY NOTES
- (XX) EQUIPMENT
- XXX ROOM NUMBERS

KEY NOTES

1. PAPER TOWEL DISPENSER– SPEC. 116000
2. COAT HOOK STRIP MOUNTED @54" AFF–SPEC 116000 MOUNT SINGLE HOOK @ 48" CENTERED BELOW HOOK STRIP
3. SAFETY SUPPLY CABINET, REFER TO DETAIL 7/IL505 SPEC 116000
4. 1" DIA INLET PORT FOR HYDROGEN GENERATOR
5. OPEN TO FINISH WALL SURFACE
6. EPOXY DRYING RACK – 18"x36" – SPEC 123450
7. FILLER PANEL – MATCH CASEWORK MATERIAL REFER TO 4/IL510 FOR AUTOPSY END FILLER PANEL CONDITION
8. OMIT FRONT AND BACK APRON FOR 34" HIGH UNDER COUNTER EQUIPMENT.
9. SS SHELVING–SPEC 116000
10. 2 1/2" CORD GROMMET–SPEC 123450
11. CONTROL PANEL FOR FA7 (TARGET TROLLEY)
12. 2'X4' STAINLESS STEEL FOLD DOWN SURFACE – REFER TO DETAIL 8/IL507
13. COUNTERTOP MOUNTED COMPRESSED AIR (CA) TURRET
14. COLD WATER HOSE BIB @54" AFF– BY DIV. 22
15. HIGH DENSITY SHELVING– BY DIV. 10
16. KSSF SUPPORT FRAME– REFER TO DETAIL 9/IL500
17. HOT & COLD MIXING STATION–BY DIV. 22 (W/ 30' OF HOSE U.O.N)
18. MOBILE LIFT PARK
19. UTILITY SINK– BY DIV. 22
20. UNDER COUNTER KNEE WALL SUPPORT –REFER TO ARCHITECTURAL.
21. SPILL CART–SPEC 116000
22. SUPPORT LEG–BY DIV. 12
23. COAT RACK & SHELF–SPEC 116000
24. WALL MOUNTED PAPER ROLL DISPENSER WITH PLASTIC LAMINATE COVERED PLYWOOD BACKBOARD. 36"HX12"H MOUNTED AT 48" AFF TO BOTTOM.
25. DOUBLE KSSF– REFER TO DETAIL 9/IL502
26. ELEVATION TRANSITION POINT
27. MILLWORK–BY DIV. 6
28. FORMALIN SPIGOT–SPEC 117810
29. UNDERCOUNTER TYPE I WATER POLISHER–BY DIV. 22
30. ALL STAINLESS STEEL CASEWORK IN AUTOPSY SUITES WILL HAVE MARINE EDGE COUNTER TOPS.
31. GAS MANIFOLD @66" A.F.F. (BOTTOM) –BY DIV. 22
32. FLOOR DRAIN– BY DIV. 22
33. DISSECTION TABLE SHELF BY MFR
34. STAINLESS STEEL SCRUB SINK– BY DIV. 22
35. LEVEL 4 BULLET RESISTANT DOOR/FRAME–SPEC 083950
36. "IN USE" LIGHT–DETAIL–1/IL507–BY DIV. 26
37. PUMP CONTROL FOR FORMALIN DISPENSER
38. MAPLE COUNTER–2" THICK W/ 3/4" X 3 1/2" MAPLE BACK SPLASH W/ 4" LEADING EDGE OVERHANG– SPEC 123450
39. 8" DIA. EXHAUST DUCT FROM PROJECTILE RECOVERY TANK. DIV. 23 TO CONNECT EXHAUST
40. MOBILE DISSECTING WING–SPEC 117810
41. WALL MOUNTED LONG GUN RACK – REFER TO 7/IL507
42. PAINTED 3" NUMBER AND ARROW WHITE PAINT STENCILED ON RUBBER PANELS AT 1 YARD INCREMENTS MEASURED FROM THE ZERO POINT OF THE FIRING LINE. ACCURACY REQUIRED WITHIN 1/16".
43. OPEN ALL OF THE WAY THROUGH
44. GAS ANNUNCIATOR PANEL– BY DIV. 22
45. FORMALIN CONTAINER AND DISPENSING PUMP ON 18"D SHELF –SPEC 117810
46. PAINTED FIRING LINE– REFER TO DETAIL 3/IL507
47. FLUSHING FLOOR DRAIN–BY DIV. 22
48. CONTROLS FOR RANGE AIR HANDLING SYSTEM– DIV. 23
49. 36"L X 12" W X 1" THICK MAPLE WOOD SHELF MOUNT & 48" AFF–SPEC 123450
50. CW CONNECTION @ 48" A.F.F.–REFER TO PLUMB. VERIFY LOCATION BASED ON APPROVED SHOP DRAWINGS OF PRT
51. MANUAL OPERATED BLACKOUT SHADE–SPEC 122413
52. LOW ELEVATION EXHAUST– REFER TO MECHANICAL
53. BUG ZAPPER MOUNTED @ +84" A.F.F.–BY DIV 26 –SPEC 116000
54. HAMPER– NIC
55. 2–1/2" X 18" CORD SLOT
56. EXHAUST VENTS BY DISSECTING STATION MFR. (VERIFY 8"X24") –COORDINATE DUCTWORK WITH DIV. 23
57. ACID VENT PIPE– REFER TO DETAIL 2/IL500 AND MECHANICAL
58. ADJUSTABLE TOOL RACK–SPEC 114900 REFER TO DETAIL 5/IL507
59. 12"X12"X12" FLOOR SINK–BY DIV. 22
60. PRESSURE DIFFERENTIAL INDICATOR @ 54" AFF– BY DIV. 23
61. U.L. 4 BULLET RESISTANT WINDOW & FRAME– SPEC 085653
62. DIRECT CONNECT EXHAUST– BY DIV. 23
63. DIGITAL READOUT FOR SCALE–SPEC 117810
64. ACID VENT DUCT– REFER TO TACDx ELEVATION ON IL004– BY DIV. 23
65. BELOW COUNTER RECEPTACLE RECESSED INTO SERVICE CLOSURE PANEL– REFER TO ELECTRICAL DRAWINGS.
66. TRENCH DRAIN– BY DIV. 22
67. USER CONTROLLED AIR FLOW SWITCH–BY DIV. 23
68. BULLET TRAP/RANGE SIGN MOUNTED AT 60" AFF TO BOTTOM–SPEC. 114900
69. PRT SIGN MOUNTED AT 60" AFF TO BOTTOM. –SPEC. 114900
70. WALL MOUNTED FLAT PANEL MONITOR–BY DIV. 27
71. COOLER CONTROL PANEL
72. IN–WALL FLUSH VALVE FOR FLUSHING FLOOR DRAINS – BY DIV. 22
73. EXISTING AMMO STORAGE SHELVING SYSTEM TO BE RELOCATED TO NEW FACILITY BY CONTRACTOR
74. BACKDRAFT EXHAUST GRILLE– BY DIV. 23 REFER TO MECH. FOR SIZE, MOUNT ABOVE COUNTERTOP BACKSPLASH
75. ADA COMPLIANT S.S. SINK–BY DIV. 22
76. REMOVABLE EVIDENCE RACK MOUNTED TO MOBILE TABLE–REFER TO DETAIL 2/IL502–SPEC 123450
77. UMBILICAL SERVICE CHASE–SPEC 123450
78. DIRECT CONNECT PRT TO CW
79. COMPRESSED AIR– BY DIV. 23
80. TYPE 3 RO WATER FAUCET –BY DIV. 22 –COUNTER MOUNTED
81. TYPE 1 DI WATER POLISHER SPEC 116000 – WALL MOUNTED U.O.N. (BLOCKING REQUIRED)
82. GLASS WALL PANEL–REFER TO ARCH.
83. HUB DRAIN FOR BODY FREEZER CONDENSATE BY DIV. 22
84. HUB DRAIN– BY DIV. 22
85. MONITOR AND INTERCOM TO OUTSIDE PEDESTAL – BY DIV. 26
86. S.S. WALL GUARD – REFER TO DET. 6/IL505. IN ROOMS 125, 125A AND 125B S.S. WALL GUARDS ARE TO BE BY COOLER MFR.
87. S.S. CORNER GUARD – REFER TO DET. 6/IL505
88. ADJUSTABLE DOCK LIGHT– BY DIV. 26
89. X–RAY ROOM TO BE R.F. SHIELDED PER QUALIFIED PHYSICIST CONSULTANT PRIOR TO CONSTRUCTION.
90. INTEGRAL COUNTERTOP SIDE SPLASH
91. MOP AND BROOM HOLDER RACK–SPEC. 116000
92. STEEL STRUCTURE TO SUPPORT DISSECTING STATION –BY STRUCTURAL ENGINEER
93. APPROXIMATE LOCATION OF EVAPORATING UNITS IN COLD ROOMS MOUNTED NEAR CEILING
94. SCALE POLE BRACKET–SPEC 117810
95. SPRAY HOSE ASSEMBLY – SPEC. 117800
96. MONITOR MOUNTED ON ARTICULATING SWIVEL ARM BRACKET–BY DIV. 27, WALL BLOCKING AS REQ'D
97. HYDRO ASPIRATOR – SPEC. 117810
98. STUB FOR FUTURE DIRECT EXHAUST AND SNORKEL CONNECTION– BY DIV. 23
99. 3" H X 4' W MARKER BOARD–SPEC. 101100
100. ARTICULATING MARKER BOARD–SPEC 116000
101. S.S. SHELF – 12"L x 10"D
102. S.S. SHELF – 11"D, PROVIDE HOLE IN SHELF FOR SCALE POST AND ALIGN WITH SCALE POST BRACKET
103. MATCHING BACK DRAFT WALL VENTS SUPPLIED BY DISSECTION TABLE MFR SPEC 117810 – DIV. 23 WILL CONNECT THE EXHAUST.
104. 6" INTEGRAL WALL BASE– REFER TO FINISH SCHEDULE
105. INSTRUMENT DRAWER–SPEC. 117810
106. DISPOSAL SWITCH
107. GFCI OUTLET W/ WEATHERPROOF COVER
108. 2 HP DISPOSAL– SPEC. 117810
109. END RINSE CONTROL VALVE
110. HW & CW MIXING FAUCET
111. EXHAUST VENTS BY DISSECTING STATION MFR. (8"X30") –COORDINATE DUCTWORK WITH DIV. 23
112. UV PASS–THRU CABINET WITH VISION DOORS SPEC 116000– REFER TO DETAIL 5/IL504
113. ABOVE COUNTER RECEPTACLE RECESSED INTO SERVICE CLOSURE PANEL OR CHASE– REFER TO ELECTRICAL DRAWINGS.
114. STAINLESS STEEL CANOPY–BY DIV. 23
115. CURTAIN AND TRACK– BY DIV. 10
116. MARBLE TABLE – SPEC. 116000
117. TASK LIGHT– BY DIV. 26
118. LIQUID NITROGEN DEWAR, NIC
119. 1" DIA. HOLE W/CAP FOR DI WATER DELIVERY DEVICE.
120. (2) PADLOCK RACK MOUNTED ON WALL @54" AFF AND 48" AFF
121. EXHAUST VENTS TO BE HAVE OPPOSED BLADE DAMPER ACCESSIBLE TROUGH THE FACE OF THE GRILL FOR AIR BALANCING –BY DISSECTING TABLE MFR
122. POWER FROM BELOW– BY DIV. 26
123. STUB OUT HVAC FOR FUTURE ME6
124. CURTAIN–BY DIV. 10
125. HEIGHT DETERMINED BY ME13
126. STOP REAGENT SHELF FOR TALL CABINETS
127. CONTROL FOR ME25 POWER AND DATA BY DIV. 26

CRSA
649 E. South Temple
Salt Lake City, UT 84102
801.355.5915

MWL
11798 N. Lakeridge Pkwy.
Ashland, VA 23005
804-228-7473

State of Utah
Department of Administrative Services
Division of Facilities Construction & Management
4110 State Office Building
Salt Lake City, Utah 84114
Phone: (801) 538 - 3018
Fax: (801) 538 - 3267

DFCM APPROVAL STAMP

STATE OF UTAH #134098 MEHRDAD SAMIE LICENSED ARCHITECT
04.28.2014
ARCHITECT-ENGINEER STAMP

Unified State Laboratory Module 2
4501 South 2700 West,
Taylorsville, UT 84118

KEY PLAN

DFCM #: 13020300
Project #: B13-024

DATE:	ISSUE TYPE:
APRIL 21, 2014	BID SET
MAY 8, 2015	ADD # 1

CHECKED BY: B. CARVER
DRAWN BY: B. WARRREN

3RD FLOOR ENLARGED LAB PLANS

IL110

VOLUME 1

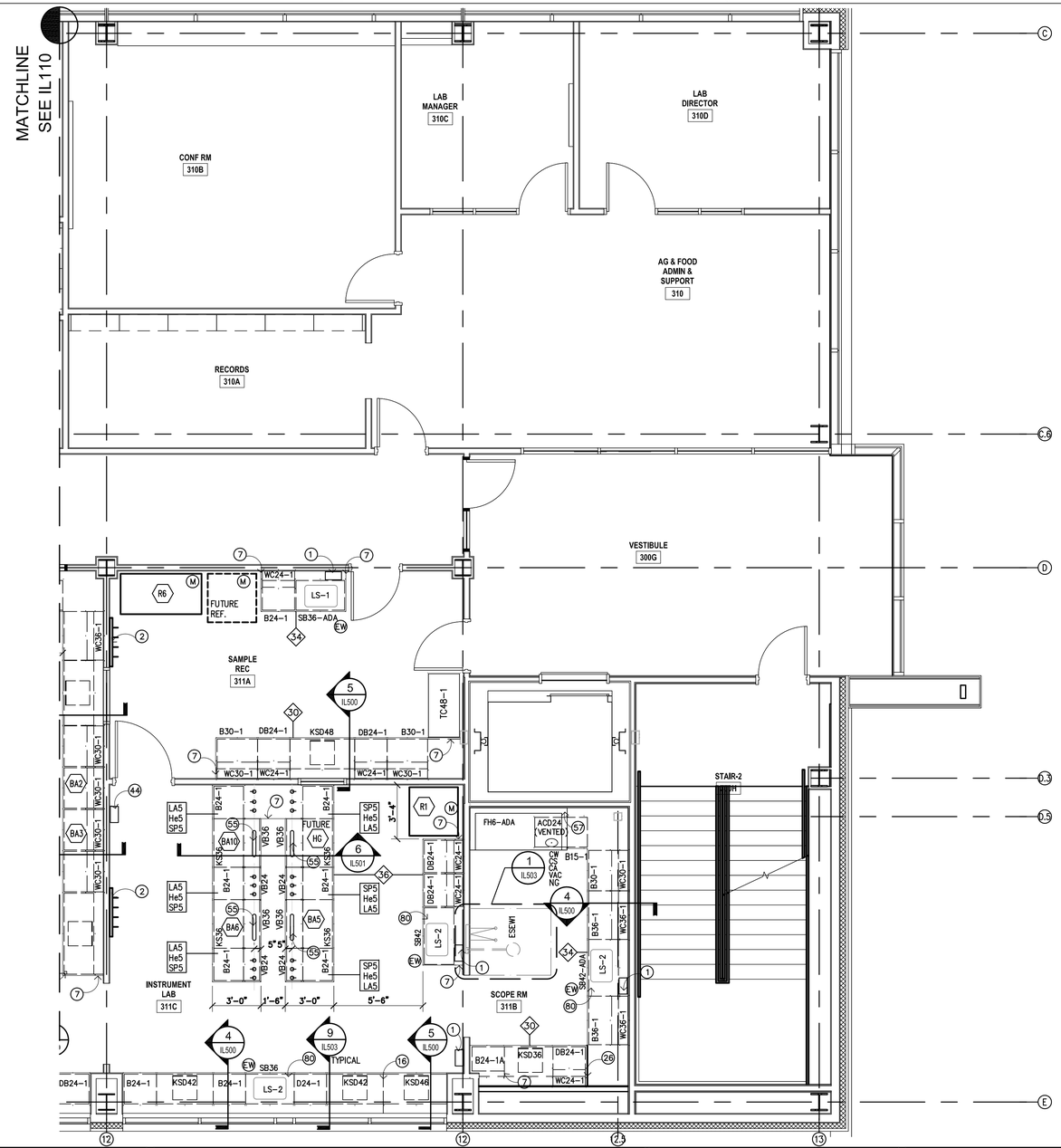

KEY SYMBOLS

- (L) LOCKING
- (M) MONITOR TO BMS
- (EW) DECK MOUNTED DRENCH HOSE EYEWASH FIXTURE
- (CA) COMPRESSED AIR
- (XX) MARINE EDGE COUNTER ELEVATION IN INCHES
- (XX) NON-MARINE EDGE COUNTER ELEVATION IN INCHES
- (X) KEY NOTES
- (XX) EQUIPMENT
- (XXX) ROOM NUMBERS

KEY NOTES

1. PAPER TOWEL DISPENSER– SPEC. 116000
2. COAT HOOK STRIP MOUNTED @54" AFF–SPEC 116000 MOUNT SINGLE HOOK @ 48" CENTERED BELOW HOOK STRIP
3. SAFETY SUPPLY CABINET, REFER TO DETAIL 7/IL505 SPEC 116000
4. 1" DIA INLET PORT FOR HYDROGEN GENERATOR
5. OPEN TO FINISH WALL SURFACE
6. EPOXY DRYING RACK – 18"x36" – SPEC 123450
7. FILLER PANEL – MATCH CASEWORK MATERIAL REFER TO 4/IL510 FOR AUTOPSY END FILLER PANEL CONDITION
8. OMIT FRONT AND BACK APRON FOR 34" HIGH UNDER COUNTER EQUIPMENT.
9. SS SHELVING–SPEC 116000
10. 2 1/2" CORD GROMMET–SPEC 123450
11. CONTROL PANEL FOR FA7 (TARGET TROLLEY)
12. 2'X4' STAINLESS STEEL FOLD DOWN SURFACE – REFER TO DETAIL 8/IL507
13. COUNTERTOP MOUNTED COMPRESSED AIR (CA) TURRET
14. COLD WATER HOSE BIB @54" AFF– BY DIV. 22
15. HIGH DENSITY SHELVING– BY DIV. 10
16. KSSF SUPPORT FRAME– REFER TO DETAIL 9/IL500
17. HOT & COLD MIXING STATION–BY DIV. 22 (W/ 30' OF HOSE U.O.N)
18. MOBILE LIFT PARK
19. UTILITY SINK– BY DIV. 22
20. UNDER COUNTER KNEE WALL SUPPORT –REFER TO ARCHITECTURAL
21. SPILL CART–SPEC 116000
22. SUPPORT LEG–BY DIV. 12
23. COAT RACK & SHELF–SPEC 116000
24. WALL MOUNTED PAPER ROLL DISPENSER WITH PLASTIC LAMINATE COVERED PLYWOOD BACKBOARD. 36"HX12"H MOUNTED AT 48" AFF TO BOTTOM.
25. DOUBLE KSSF– REFER TO DETAIL 9/IL502
26. ELEVATION TRANSITION POINT
27. MILLWORK–BY DIV. 6
28. FORMALIN SPIGOT–SPEC 117810
29. UNDERCOUNTER TYPE I WATER POLISHER–BY DIV. 22
30. ALL STAINLESS STEEL CASEWORK IN AUTOPSY SUITES WILL HAVE MARINE EDGE COUNTER TOPS.
31. GAS MANIFOLD @66" A.F.F. (BOTTOM) –BY DIV. 22
32. FLOOR DRAIN– BY DIV. 22
33. DISSECTION TABLE SHELF BY MFR
34. STAINLESS STEEL SCRUB SINK– BY DIV. 22
35. LEVEL 4 BULLET RESISTANT DOOR/FRAME–SPEC 083950
36. 'IN USE' LIGHT–DETAIL–1/IL507–BY DIV. 26
37. PUMP CONTROL FOR FORMALIN DISPENSER
38. MAPLE COUNTER–2" THICK W/ 3/4" X 3 1/2" MAPLE BACK SPLASH W/ 4" LEADING EDGE OVERHANG– SPEC 123450
39. 8" DIA. EXHAUST DUCT FROM PROJECTILE RECOVERY TANK. DIV. 23 TO CONNECT EXHAUST
40. MOBILE DISSECTING WING–SPEC 117810
41. WALL MOUNTED LONG GUN RACK – REFER TO 7/IL507
42. PAINTED 3" NUMBER AND ARROW WHITE PAINT STENCILED ON RUBBER PANELS AT 1 YARD INCREMENTS MEASURED FROM THE ZERO POINT OF THE FIRING LINE. ACCURACY REQUIRED WITHIN 1/16".
43. OPEN ALL OF THE WAY THROUGH
44. GAS ANNUNCIATOR PANEL– BY DIV. 22
45. FORMALIN CONTAINER AND DISPENSING PUMP ON 18"D SHELF –SPEC 117810
46. PAINTED FIRING LINE– REFER TO DETAIL 3/IL507
47. FLUSHING FLOOR DRAIN–BY DIV. 22
48. CONTROLS FOR RANGE AIR HANDLING SYSTEM– DIV. 23
49. 36"L X 12" W X 1" THICK MAPLE WOOD SHELF MOUNT & 48" AFF–SPEC 123450
50. CW CONNECTION @ 48" A.F.F.–REFER TO PLUMB. VERIFY LOCATION BASED ON APPROVED SHOP DRAWINGS OF PRT
51. MANUAL OPERATED BLACKOUT SHADE–SPEC 122413
52. LOW ELEVATION EXHAUST– REFER TO MECHANICAL
53. BUG ZAPPER MOUNTED @ +84" A.F.F.–BY DIV 26 –SPEC 116000
54. HAMPER– NIC
55. 2–1/2" X 18" CORD SLOT
56. EXHAUST VENTS BY DISSECTING STATION MFR. (VERIFY 8"X24") –COORDINATE DUCTWORK WITH DIV. 23
57. ACID VENT PIPE– REFER TO DETAIL 2/IL500 AND MECHANICAL
58. ADJUSTABLE TOOL RACK–SPEC 114900 REFER TO DETAIL 5/IL507
59. 12"X12"X12" FLOOR SINK–BY DIV. 22
60. PRESSURE DIFFERENTIAL INDICATOR @ 54" AFF– BY DIV. 23
61. U.L. 4 BULLET RESISTANT WINDOW & FRAME– SPEC 085653
62. DIRECT CONNECT EXHAUST– BY DIV. 23
63. DIGITAL READOUT FOR SCALE–SPEC 117810
64. ACID VENT DUCT– REFER TO TACDx ELEVATION ON IL004– BY DIV. 23
65. BELOW COUNTER RECEPTACLE RECESSED INTO SERVICE CLOSURE PANEL– REFER TO ELECTRICAL DRAWINGS.
66. TRENCH DRAIN– BY DIV. 22
67. USER CONTROLLED AIR FLOW SWITCH–BY DIV. 23
68. BULLET TRAP/RANGE SIGN MOUNTED AT 60" AFF TO BOTTOM–SPEC. 114900
69. PRT SIGN MOUNTED AT 60" AFF TO BOTTOM. –SPEC. 114900
70. WALL MOUNTED FLAT PANEL MONITOR–BY DIV. 27
71. COOLER CONTROL PANEL
72. IN–WALL FLUSH VALVE FOR FLUSHING FLOOR DRAINS – BY DIV. 22
73. EXISTING AMMO STORAGE SHELVING SYSTEM TO BE RELOCATED TO NEW FACILITY BY CONTRACTOR
74. BACKDRAFT EXHAUST GRILLE– BY DIV. 23 REFER TO MECH. FOR SIZE, MOUNT ABOVE COUNTERTOP BACKSPLASH
75. ADA COMPLIANT S.S. SINK–BY DIV. 22
76. REMOVABLE EVIDENCE RACK MOUNTED TO MOBILE TABLE–REFER TO DETAIL 2/IL502–SPEC 123450
77. UMBILICAL SERVICE CHASE–SPEC 123450
78. DIRECT CONNECT PRT TO CW
79. COMPRESSED AIR– BY DIV. 23
80. TYPE 3 RO WATER FAUCET –BY DIV. 22 –COUNTER MOUNTED
81. TYPE 1 DI WATER POLISHER SPEC 116000 – WALL MOUNTED U.O.N. (BLOCKING REQUIRED)
82. GLASS WALL PANEL–REFER TO ARCH.
83. HUB DRAIN FOR BODY FREEZER CONDENSATE BY DIV. 22
84. HUB DRAIN– BY DIV. 22
85. MONITOR AND INTERCOM TO OUTSIDE PEDESTAL – BY DIV. 26
86. S.S. WALL GUARD – REFER TO DET. 6/IL505. IN ROOMS 125, 125A AND 125B S.S. WALL GUARDS
87. S.S. CORNER GUARD – REFER TO DET. 6/IL505
88. ADJUSTABLE DOCK LIGHT– BY DIV. 26
89. X–RAY ROOM TO BE R.F. SHIELDED PER QUALIFIED PHYSICIST CONSULTANT PRIOR TO CONSTRUCTION.
90. INTEGRAL COUNTERTOP SIDE SPLASH
91. MOP AND BROOM HOLDER RACK–SPEC. 116000
92. STEEL STRUCTURE TO SUPPORT DISSECTING STATION –BY STRUCTURAL ENGINEER
93. APPROXIMATE LOCATION OF EVAPORATING UNITS IN COLD ROOMS MOUNTED NEAR CEILING
94. SCALE POLE BRACKET–SPEC 117810
95. SPRAY HOSE ASSEMBLY – SPEC. 117800
96. MONITOR MOUNTED ON ARTICULATING SWIVEL ARM BRACKET–BY DIV. 27, WALL BLOCKING AS REQ'D
97. HYDRO ASPIRATOR – SPEC. 117810
98. STUB FOR FUTURE DIRECT EXHAUST AND SNORKEL CONNECTION– BY DIV. 23
99. 3' H X 4' W MARKER BOARD–SPEC. 101100
100. ARTICULATING MARKER BOARD–SPEC 116000
101. S.S. SHELF – 12"L x 10"D
102. S.S. SHELF – 11"D, PROVIDE HOLE IN SHELF FOR SCALE POST AND ALIGN WITH SCALE POST BRACKET
103. MATCHING BACK DRAFT WALL VENTS SUPPLIED BY DISSECTION TABLE MFR SPEC 117810 – DIV. 23 WILL CONNECT THE EXHAUST.
104. 6" INTEGRAL WALL BASE– REFER TO FINISH SCHEDULE
105. INSTRUMENT DRAWER–SPEC. 117810
106. DISPOSAL SWITCH
107. GFCI OUTLET W/ WEATHERPROOF COVER
108. 2 HP DISPOSAL– SPEC. 117810
109. END RINSE CONTROL VALVE
110. HW & CW MIXING FAUCET
111. EXHAUST VENTS BY DISSECTING STATION MFR. (8"X30") –COORDINATE DUCTWORK WITH DIV. 23
112. UV PASS–THRU CABINET WITH VISION DOORS SPEC 116000– REFER TO DETAIL 5/IL504
113. ABOVE COUNTER RECEPTACLE RECESSED INTO SERVICE CLOSURE PANEL OR CHASE– REFER TO ELECTRICAL DRAWINGS.
114. STAINLESS STEEL CANOPY–BY DIV. 23
115. CURTAIN AND TRACK– BY DIV. 10
116. MARBLE TABLE – SPEC. 116000
117. TASK LIGHT– BY DIV. 26
118. LIQUID NITROGEN DEWAR, NIC
119. 1" DIA. HOLE W/CAP FOR DI WATER DELIVERY DEVICE.
120. (2) PADLOCK RACK MOUNTED ON WALL @54" AFF AND 48" AFF
121. EXHAUST VENTS TO BE HAVE OPPOSED BLADE DAMPER ACCESSIBLE TROUGH THE FACE OF THE GRILL FOR AIR BALANCING –BY DISSECTING TABLE MFR
122. POWER FROM BELOW– BY DIV. 26
124. CURTAIN–BY DIV. 10
125. HEIGHT DETERMINED BY ME13
126. STOP REAGENT SHELF FOR TALL CABINETS
127. CONTROL FOR ME25 POWER AND DATA BY DIV. 26

CRSA
649 E. South Temple
Salt Lake City, UT 84102
801.355.5915

MWL
11798 N. Lakeridge Pkwy.
Ashland, VA 23005
804-228-7473

State of Utah
Department of Administrative Services
Division of Facilities Construction & Management
4110 State Office Building
Salt Lake City, Utah 84114
Phone: (801) 538 - 3018
Fax: (801) 538 - 3267

DFCM APPROVAL STAMP

STATE OF UTAH #134086 MEHRDAD SAMII LICENSED ARCHITECT
04.28.2014

ARCHITECT-ENGINEER STAMP

Unified State Laboratory Module 2

4501 South 2700 West,
Taylorsville, UT 84118

KEY PLAN

DFCM #: 13020300

Project #: B13-024

DATE:	ISSUE TYPE:
APRIL 21, 2014	BID SET
MAY 8, 2015	ADD # 1

CHECKED BY	B. CARVER
DRAWN BY	B. WARRREN

3RD FLOOR ENLARGED LAB PLANS

1

IL111

VOLUME 1

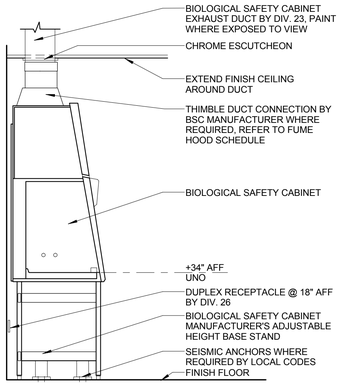

1 IL500 TYPICAL BIOLOGICAL SAFETY CABINET SECTION
1/2" = 1'-0"

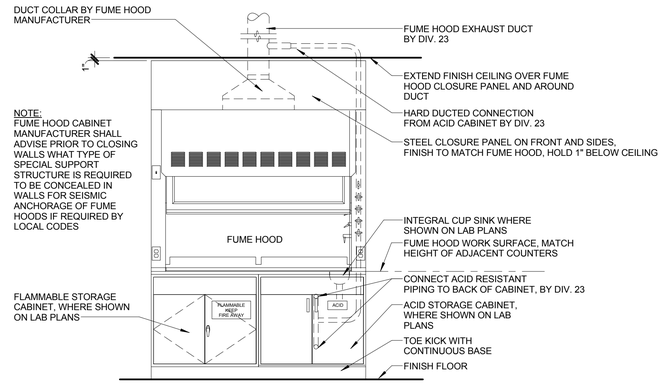

2 IL500 FUME HOOD ELEVATION
1/2" = 1'-0"

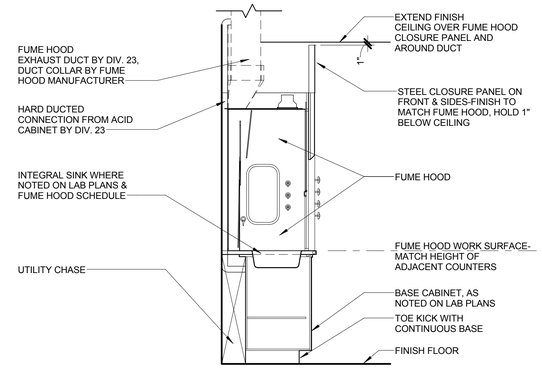

3 IL500 FUME HOOD SECTION
1/2" = 1'-0"

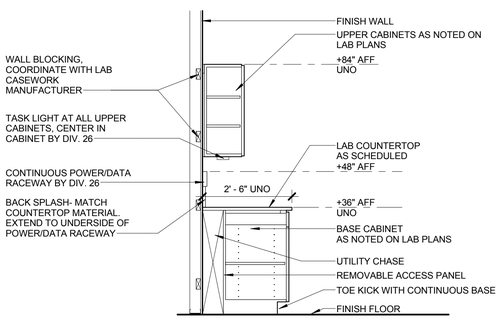

4 IL500 TYPICAL SECTION @ FIXED WALL CASEWORK
1/2" = 1'-0"

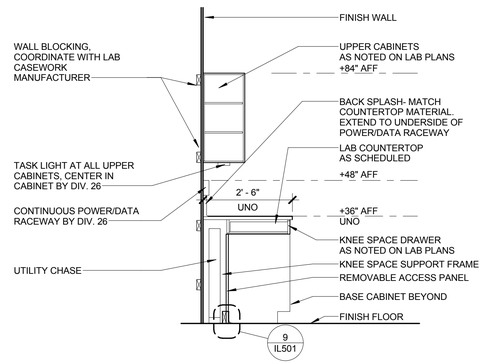

5 IL500 TYPICAL KNEE SPACE SECTION
1/2" = 1'-0"

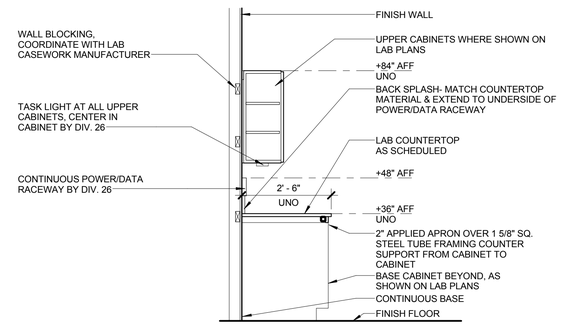

6 IL500 TYPICAL KNEE SPACE SECTION @ 2" APRON
1/2" = 1'-0"

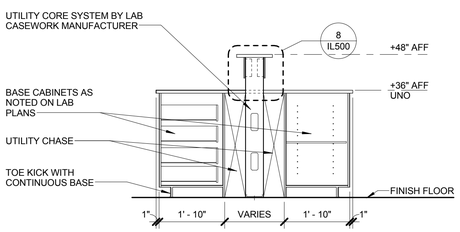

7 IL500 UTILITY CORE SECTION @ FIXED CASEWORK
1/2" = 1'-0"

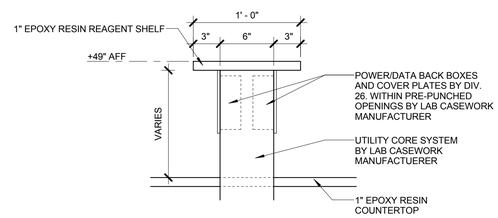

8 IL500 REAGENT SHELF SECTION
1 1/2" = 1'-0"

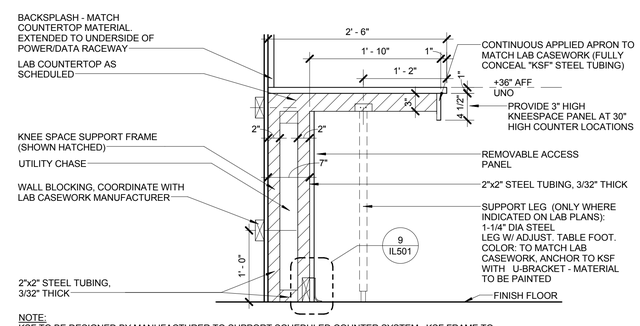

NOTE:
KSF TO BE DESIGNED BY MANUFACTURER TO SUPPORT SCHEDULED COUNTER SYSTEM. KSF FRAME TO BE FULLY CONCEALED BY CLOSURE PANELS. ANCHOR TO WALL BLOCKING AT TOP AND BOTTOM.

9 IL500 TYPICAL KNEE SPACE SUPPORT FRAME (KSSF)
1" = 1'-0"

CRSA
649 E. South Temple
Salt Lake City, UT 84102
801.355.5915

MWL
11798 N. Lakeridge Pkwy.
Ashland, VA 23005
804-228-7473

State of Utah
Department of Administrative Services
Division of Facilities Construction & Management
4110 State Office Building
Salt Lake City, Utah 84114
Phone: (801) 538 - 3018
Fax: (801) 538 - 3267

DFCM APPROVAL STAMP

STATE OF UTAH #134036 MEHRDAD SAMIE LICENSED ARCHITECT
04-28-2014
ARCHITECT-ENGINEER STAMP

Unified State Laboratory Module 2

4501 South 2700 West,
Taylorsville, UT 84118

DFCM #: 13020300
Project #: B13-024

DATE:	ISSUE TYPE:
APRIL 21, 2014	BID SET
MAY 8, 2015	ADD # 1
CHECKED BY	B. CARVER
DRAWN BY	B. WARRREN

1
LAB DETAILS

IL500
VOLUME 1

C:\Users\Anne.Vig\Desktop\Revit Local Files\LAB-Casework Utah_AnneVig.rvt
5/7/2015 8:46:30 AM

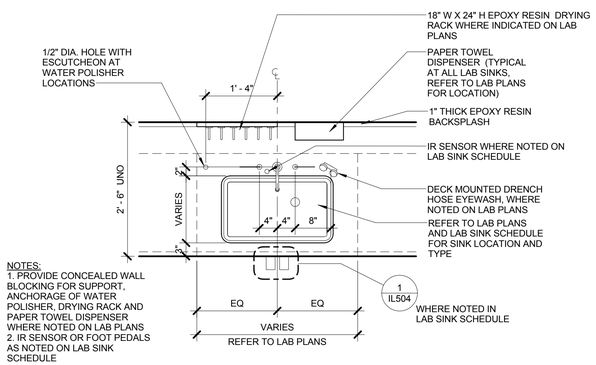

1 IL501 TYPICAL LAB SINK PLAN
3/4" = 1'-0"

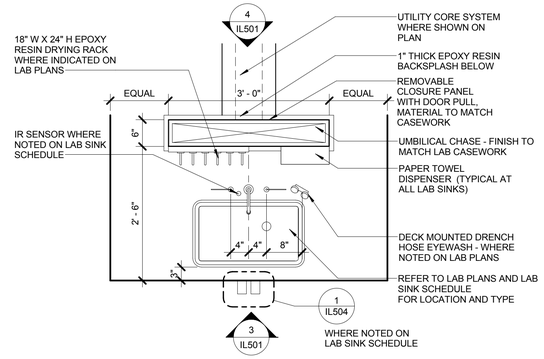

2 IL501 LAB SINK PLAN WITH UMBILICAL CHASE
3/4" = 1'-0"

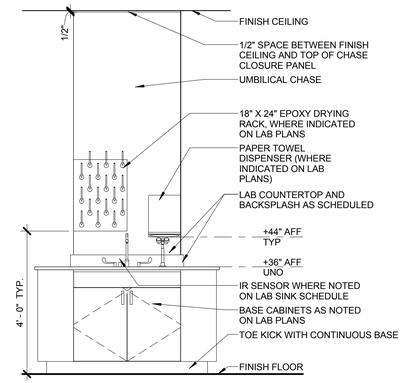

3 IL501 TYPICAL ELEVATION @ UMBILICAL CHASES
1/2" = 1'-0"

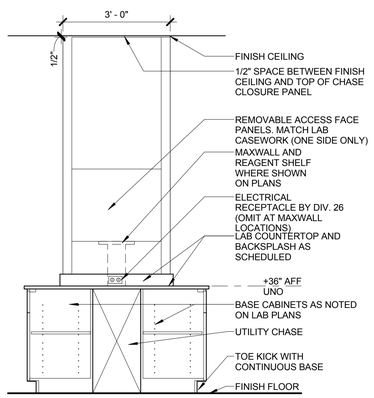

4 IL501 TYPICAL UMBILICAL CHASE REAR ELEVATION
1/2" = 1'-0"

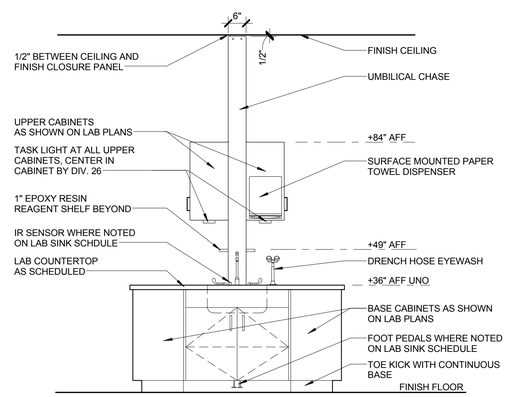

5 IL501 UMBILICAL CHASE SIDE ELEVATION
1/2" = 1'-0"

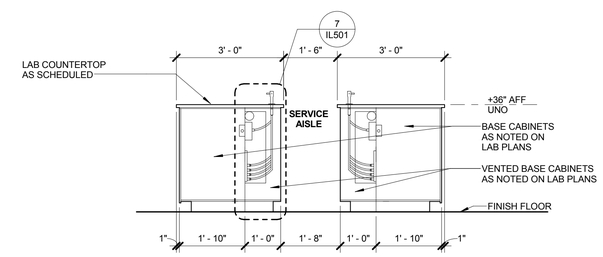

6 IL501 TYPICAL SECTION @ INSTRUMENT BENCHES
1/2" = 1'-0"

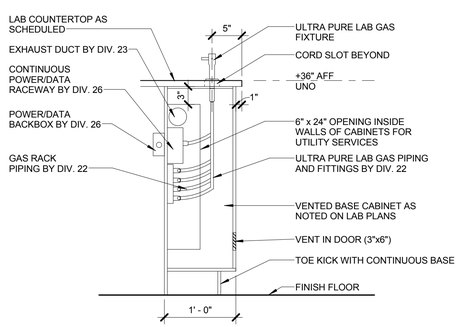

7 IL501 INSTRUMENT BENCH SECTION DETAIL
1" = 1'-0"

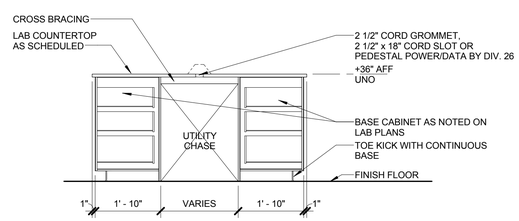

8 IL501 TYPICAL SECTION @ FIXED ISLAND CASEWORK
1/2" = 1'-0"

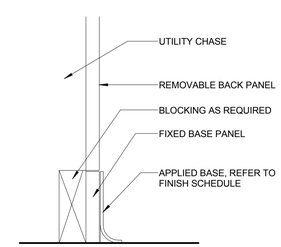

9 IL501 FIXED BASE PANEL DETAIL @ UTILITY CHASE
3" = 1'-0"

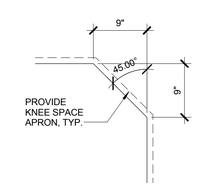

10 CORNER DESK DETAIL
1" = 1'-0"

CRSA
649 E. South Temple
Salt Lake City, UT 84102
801.355.5915

MWL
11798 N. Lakeridge Pkwy.
Ashland, VA 23005
804-228-7473

State of Utah
Department of Administrative Services
Division of Facilities Construction & Management
4110 State Office Building
Salt Lake City, Utah 84114
Phone: (801) 538 - 3018
Fax: (801) 538 - 3267

DFCM APPROVAL STAMP

STATE OF UTAH #134098 MEHRDAD SAMIE LICENSED ARCHITECT
04.28.2014
ARCHITECT-ENGINEER STAMP

Unified State Laboratory Module 2

4501 South 2700 West,
Taylorsville, UT 84118

DFCM #: 13020300
Project #: B13-024

DATE:	ISSUE TYPE:
APRIL 21, 2014	BID SET
MAY 8, 2015	ADD # 1
CHECKED BY	Checker
DRAWN BY	B. WARRREN

LAB DETAILS

IL501
VOLUME 1

C:\Users\Anne\Vig\Desktop\Revit Local Files\LAB-Casework Utah_Anne\Vig.rvt
5/7/2015 8:46:44 AM

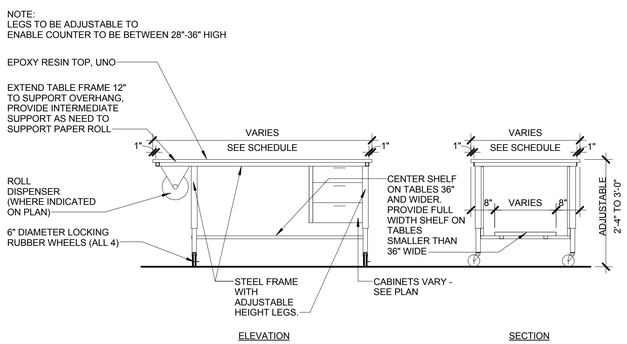

1 IL502 TYPICAL MOBILE TABLE ELEVATION

1/2" = 1'-0"

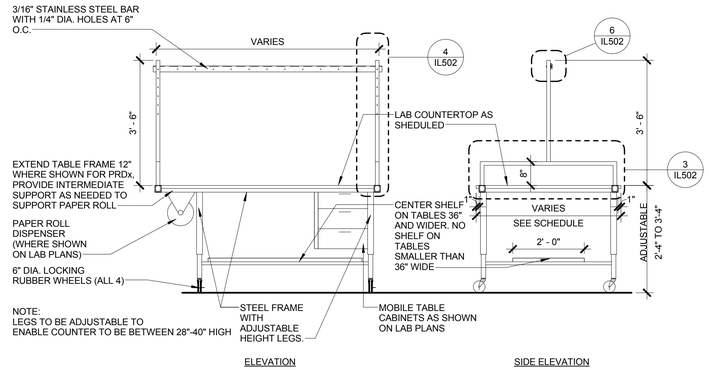

2 IL502 MOBILE TABLE ELEVATION WITH EVIDENCE RACK

1/2" = 1'-0"

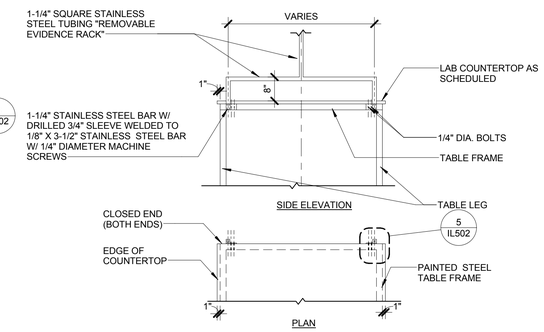

3 IL502 MOBILE TABLE EVIDENCE RACK PLAN/ELEV.

1/2" = 1'-0"

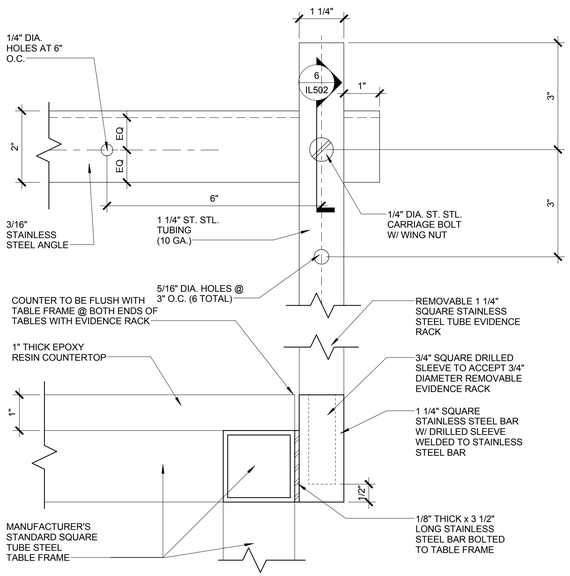

4 IL502 MOBILE TABLE EVIDENCE RACK DETAIL 1

6" = 1'-0"

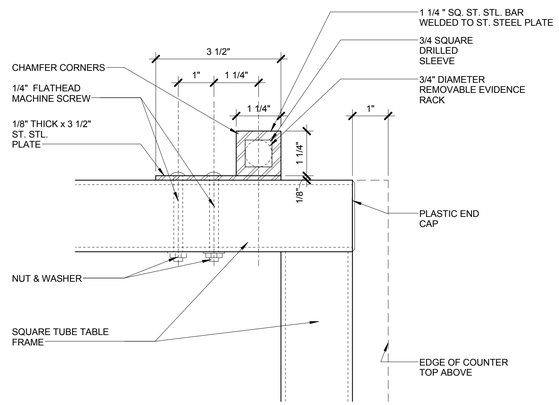

5 IL502 MOBILE TABLE EVIDENCE RACK DETAIL 2

6" = 1'-0"

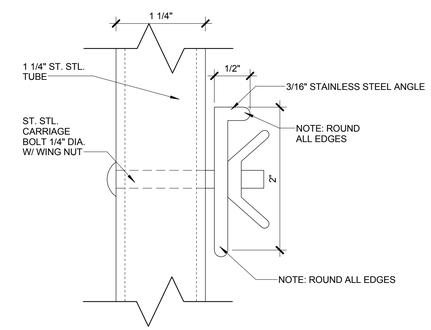

6 IL502 MOBILE TABLE EVIDENCE RACK DETAIL 3

12" = 1'-0"

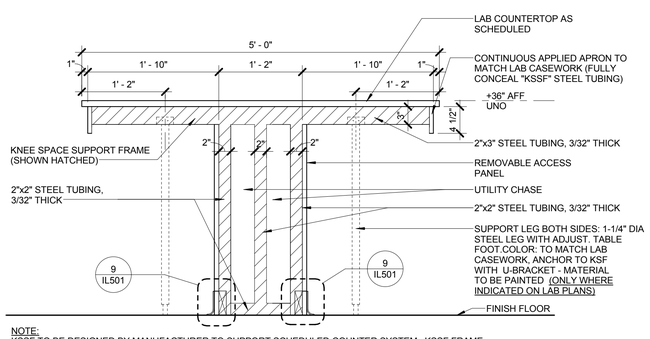

NOTE:
KSSF TO BE DESIGNED BY MANUFACTURER TO SUPPORT SCHEDULED COUNTER SYSTEM. KSSF FRAME TO BE FULLY CONCEALED BY CLOSURE PANELS. ANCHOR TO WALL BLOCKING AT TOP AND BOTTOM.

7 IL502 DOUBLE KSSF DETAIL

1" = 1'-0"

CRSA
649 E. South Temple
Salt Lake City, UT 84102
801.355.5915

MWL
11798 N. Lakeridge Pkwy.
Ashland, VA 23005
804-228-7473

State of Utah
Department of Administrative Services
Division of Facilities
Construction & Management
DFCM
4110 State Office Building
Salt Lake City, Utah 84114
Phone: (801) 538 - 3018
Fax: (801) 538 - 3267

DFCM APPROVAL STAMP

STATE OF UTAH #13403B MEHRDAD SAMIE LICENSED ARCHITECT
04-28-2014

ARCHITECT-ENGINEER STAMP

Unified State Laboratory Module 2

4501 South 2700 West,
Taylorsville, UT 84118

DFCM #: 13020300

Project #: B13-024

DATE:	ISSUE TYPE:
APRIL 21, 2014	BID SET
MAY 8, 2015	ADD # 1
CHECKED BY	Checker
DRAWN BY	B. WARRREN

LAB DETAILS

IL502

VOLUME 1

C:\Users\Amee\Vig\Desktop\Revit Local Files\LAB-Casework Utah_AmeeVig.rvt
5/7/2015 8:46:52 AM

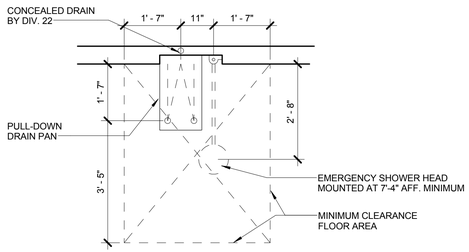

1 IL503 TYPICAL PULL DOWN EMERGENCY EYEWASH/SHOWER
1/2" = 1'-0"

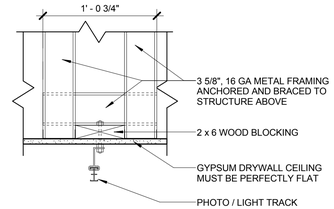

2 IL503 TYPICAL PHOTO LIGHT TRACK SECTION
1 1/2" = 1'-0"

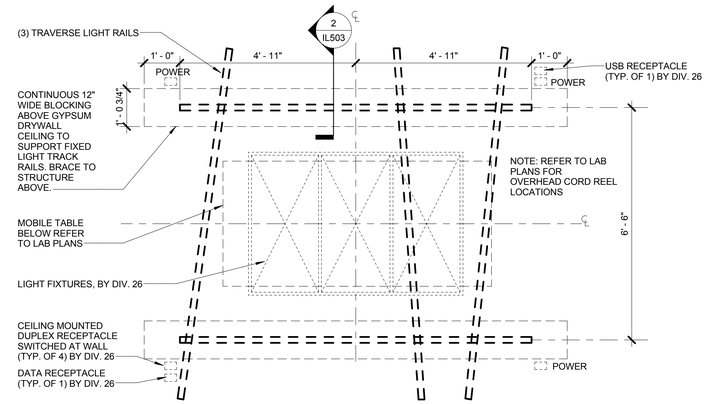

3 IL503 OVERHEAD PHOTO LIGHT TRACK
1/2" = 1'-0"

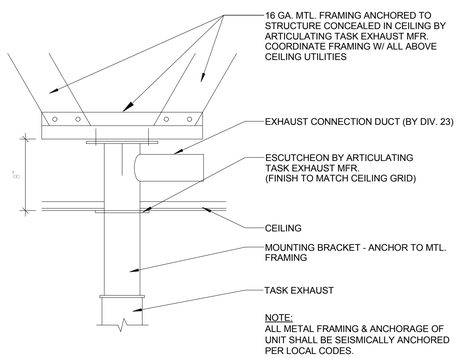

4 IL503 TYPICAL TASK EXHAUST MOUNTING DETAIL
1/2" = 1'-0"

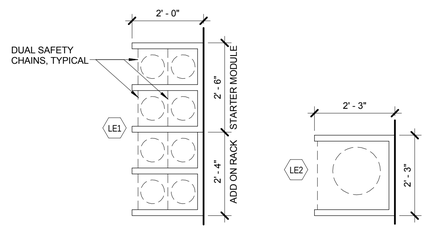

5 IL503 GAS CYLINDER RACK SYSTEM
1/2" = 1'-0"

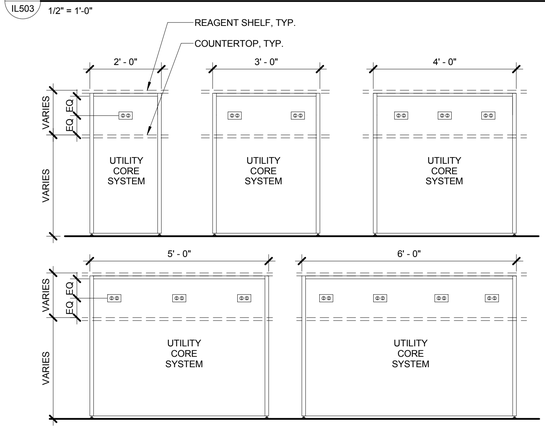

6 IL503 RECEPTACLE LOCATIONS IN UTILITY CORE SYSTEM
1/2" = 1'-0"

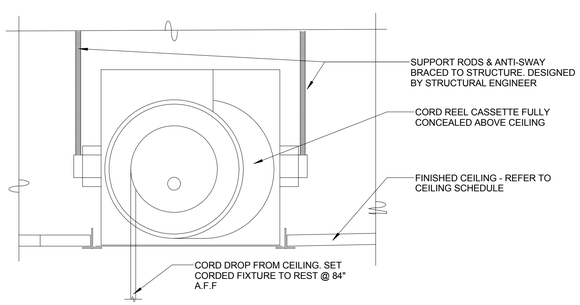

7 IL503 RECESSED OVERHEAD CORD REEL SECTION
1/2" = 1'-0"

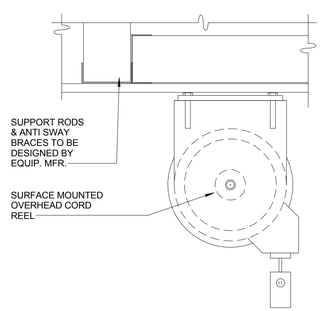

8 IL503 SURFACE MOUNTED OVERHEAD CORD REEL SECTION
1 1/2" = 1'-0"

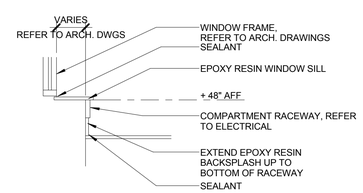

9 IL503 TYPICAL SECTION @ WINDOW SILL
1/2" = 1'-0"

CRSA
649 E. South Temple
Salt Lake City, UT 84102
801.355.5915

MWL
11798 N. Lakeridge Pkwy.
Ashland, VA 23005
804-228-7473

State of Utah
Department of Administrative Services
Division of Facilities
Construction & Management
4110 State Office Building
Salt Lake City, Utah 84114
Phone: (801) 538 - 3018
Fax: (801) 538 - 3267

DFCM APPROVAL STAMP

STATE OF UTAH #134098 MEHRDAD SAMIE LICENSED ARCHITECT
04.28.2014
ARCHITECT-ENGINEER STAMP

Unified State Laboratory Module 2

4501 South 2700 West,
Taylorsville, UT 84118

DFCM #: 13020300
Project #: B13-024

DATE:	ISSUE TYPE:
APRIL 21, 2014	BID SET
MAY 8, 2015	ADD # 1
CHECKED BY	Checker
DRAWN BY	B. WARRREN

1
LAB DETAILS

IL503
VOLUME 1

C:\Users\Annie\Vig\Desktop\Revit Local Files\LAB-Casework Utah_AnneVig.rvt
5/7/2015 8:47:00 AM

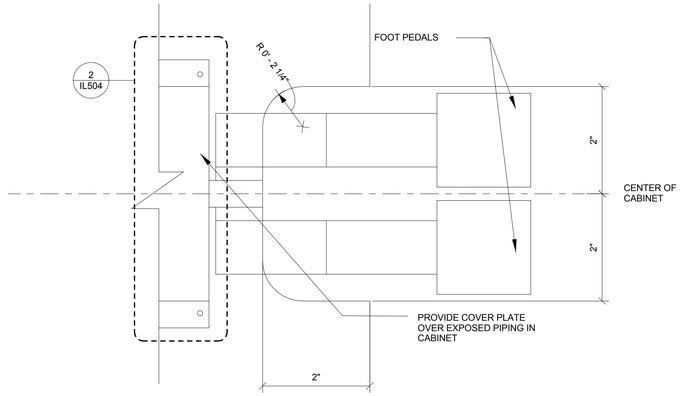

1 IL504 BASE CABINET NOTCH FOR FOOT PEDALS
3" = 1'-0"

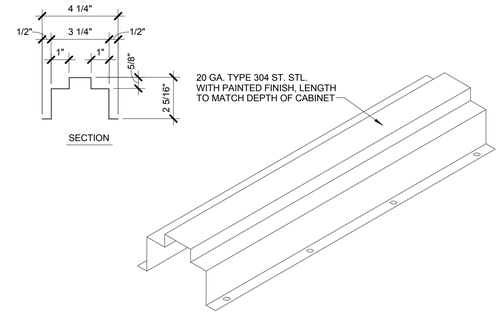

2 IL504 COVER PLATE FOR PEDAL PIPING
3" = 1'-0"

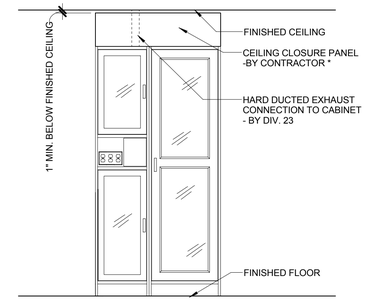

NOTES:
* NEW CEILING CLOSURE PANEL PROVIDED BY CONTRACTOR TO MATCH EXISTING CABINET MATERIAL AND FINISH

3 IL504 SUPERGLUE CABINET ENCLOSURE DETAIL
1/2" = 1'-0"

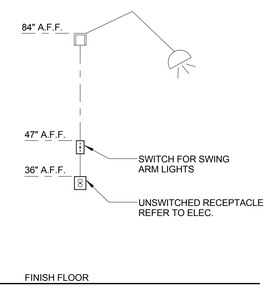

4 IL504 VEHICLE BAY DOCK LIGHT ELEVATION
1/2" = 1'-0"

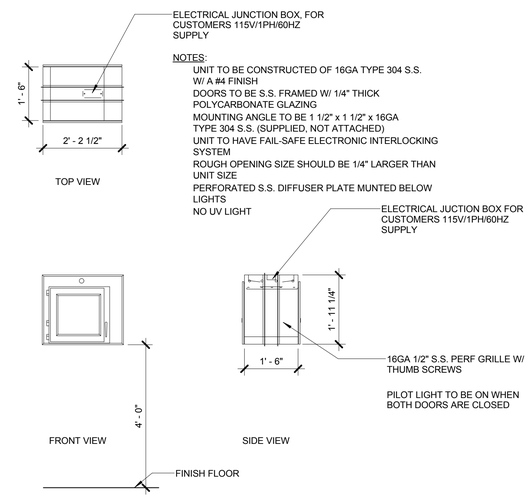

NOTES:
UNIT TO BE CONSTRUCTED OF 16GA TYPE 304 S.S. W/ A #4 FINISH
DOORS TO BE S.S. FRAMED W/ 1/4" THICK POLYCARBONATE GLAZING
MOUNTING ANGLE TO BE 1 1/2" x 1 1/2" x 16GA TYPE 304 S.S. (SUPPLIED, NOT ATTACHED)
UNIT TO HAVE FAIL-SAFE ELECTRONIC INTERLOCKING SYSTEM
ROUGH OPENING SIZE SHOULD BE 1/4" LARGER THAN UNIT SIZE
PERFORATED S.S. DIFFUSER PLATE MUNTED BELOW LIGHTS
NO UV LIGHT

5 IL504 PASS-THRU CABINET
1/2" = 1'-0"

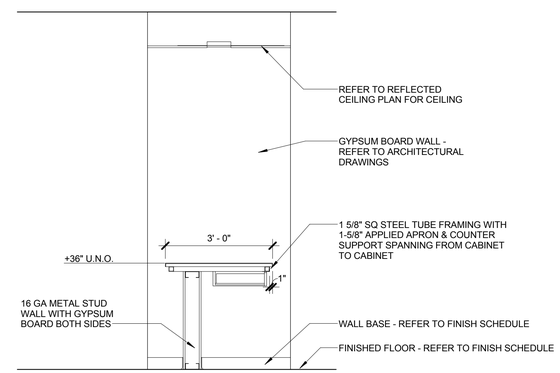

6 IL504 EVIDENCE INTAKE COUNTER SECTION
1/2" = 1'-0"

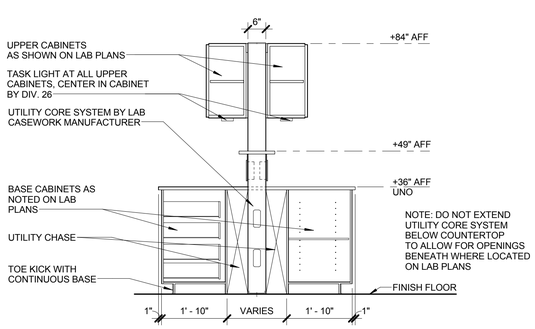

7 IL504 UTILITY CORE SECTION AT UPPER CABINETS
1/2" = 1'-0"

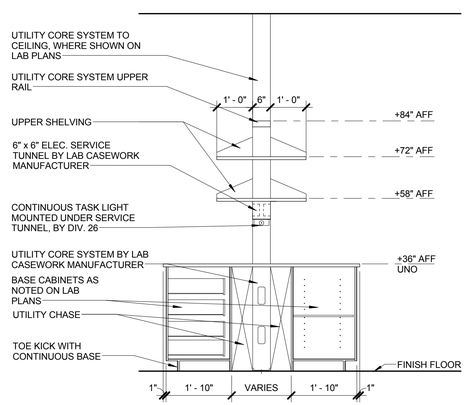

8 IL504 FULL HEIGHT UTILITY CORE SYSTEM @ SHELVING
1/2" = 1'-0"

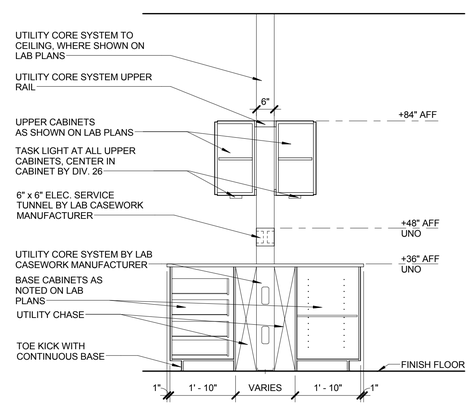

9 IL504 FULL HEIGHT UTILITY CORE SYSTEM AT WALL
1/2" = 1'-0"

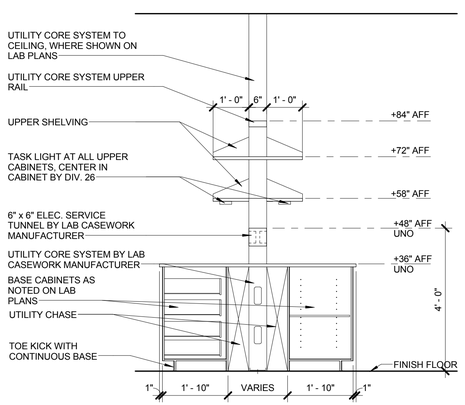

10 IL504 UTILITY CORE STYSEM @ SHELVING
1/2" = 1'-0"

CRSA
649 E. South Temple
Salt Lake City, UT 84102
801.355.5915

MWL
11798 N. Lakeridge Pkwy.
Ashland, VA 23005
804-228-7473

State of Utah
Department of Administrative Services
Division of Facilities Construction & Management
4110 State Office Building
Salt Lake City, Utah 84114
Phone: (801) 538 - 3018
Fax: (801) 538 - 3267

DFCM APPROVAL STAMP

STATE OF UTAH #134098 MEHRDAD SAMIE LICENSED ARCHITECT
04.28.2014
ARCHITECT-ENGINEER STAMP

Unified State Laboratory Module 2

4501 South 2700 West,
Taylorsville, UT 84118

DFCM #: 13020300
Project #: B13-024

DATE:	ISSUE TYPE:
APRIL 21, 2014	BID SET
MAY 8, 2015	ADD # 1
CHECKED BY	Checker
DRAWN BY	B. WARRREN

1
LAB DETAILS

IL504
VOLUME 1

C:\Users\Amre\Vig\Desktop\Revit Local Files\LAB-Casework Utah_Amre\Vig.rvt
5/7/2015 8:47:13 AM

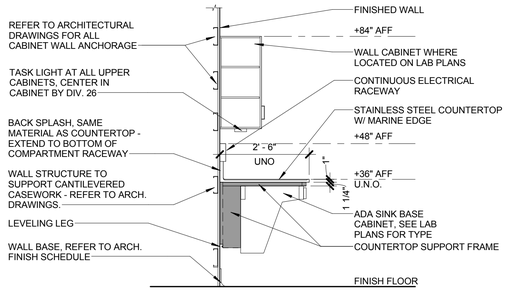

1 IL505 STAINLESS STEEL SUSPENDED ADA SINK BASE SECTION

1/2" = 1'-0"

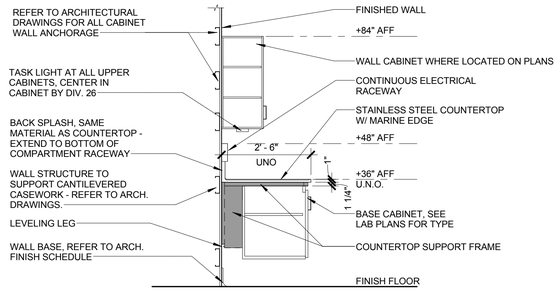

2 IL505 STAINLESS STEEL SUSPENDED BASE CABINET SECTION

1/2" = 1'-0"

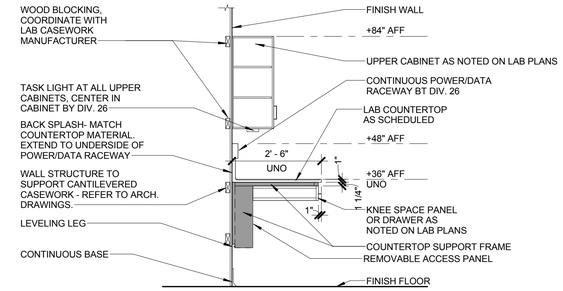

3 IL505 STAINLESS STEEL SUSPENDED COUNTER - KNEE SPACE

1/2" = 1'-0"

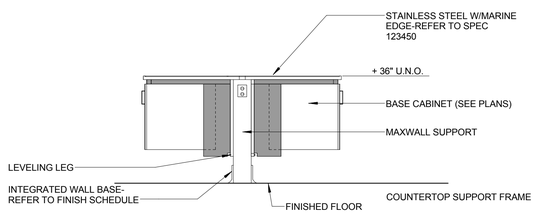

4A IL505 CANTILEVER WALL CABINETRY

1/2" = 1'-0"

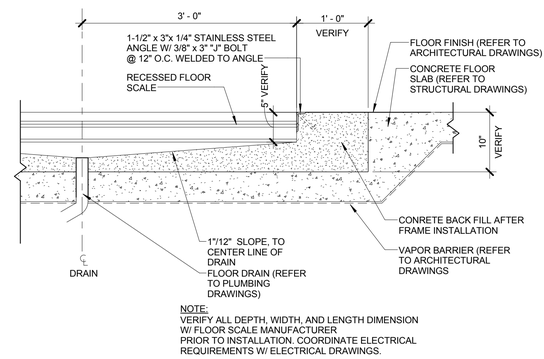

NOTE:
VERIFY ALL DEPTH, WIDTH, AND LENGTH DIMENSION W/ FLOOR SCALE MANUFACTURER PRIOR TO INSTALLATION. COORDINATE ELECTRICAL REQUIREMENTS W/ ELECTRICAL DRAWINGS.

5 IL505 RECESSED SCALE DETAIL

1" = 1'-0"

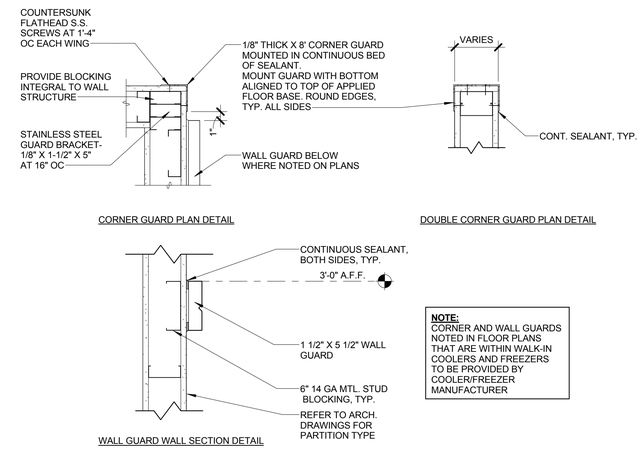

NOTE:
CORNER AND WALL GUARDS NOTED IN FLOOR PLANS THAT ARE WITHIN WALK-IN COOLERS AND FREEZERS TO BE PROVIDED BY COOLER/FREEZER MANUFACTURER

6 IL505 TYP. CORNER AND WALL GUARD DETAILS

1 1/2" = 1'-0"

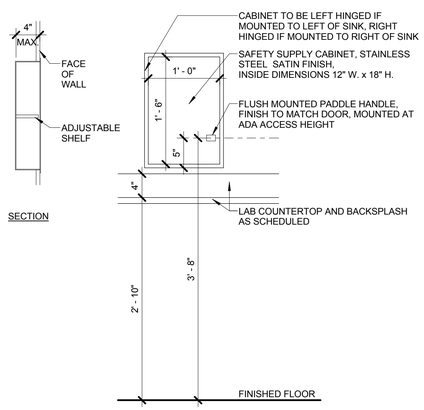

7 IL505 TYPICAL SAFETY SUPPLY CABINET

1" = 1'-0"

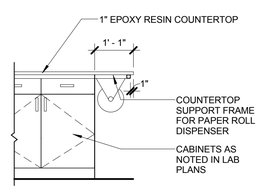

8 IL505 PAPER ROLL DETAIL AT FIXED CASEWORK

1/2" = 1'-0"

CRSA

649 E. South Temple
Salt Lake City, UT 84102
801.355.5915

MWL

11798 N. Lakeridge Pkwy.
Ashland, VA 23005
804-228-7473

State of Utah
Department of Administrative Services

Division of Facilities Construction & Management
4110 State Office Building
Salt Lake City, Utah 84114
Phone: (801) 538 - 3018
Fax: (801) 538 - 3267

DFCM APPROVAL STAMP

STATE OF UTAH #134098 MEHRDAD SAMIE LICENSED ARCHITECT

4-28-2014

ARCHITECT-ENGINEER STAMP

Unified State Laboratory Module 2

4501 South 2700 West, Taylorsville, UT 84118

DFCM #: 13020300

Project #: B13-024

DATE:	ISSUE TYPE:
APRIL 21, 2014	BID SET
MAY 8, 2015	ADD # 1
CHECKED BY	Checker
DRAWN BY	B. WARRREN

1

LAB DETAILS

IL505

VOLUME 1

C:\Users\Anne\Vg\Desktop\Revit Local Files\LAB-Casework Utah_Anne\Vg.rvt
5/7/2015 8:47:24 AM

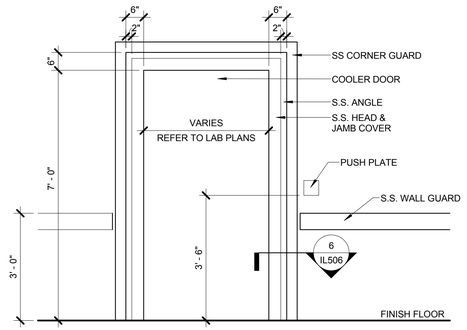

1 IL506 COOLER DOOR ELEVATION
1/2" = 1'-0"

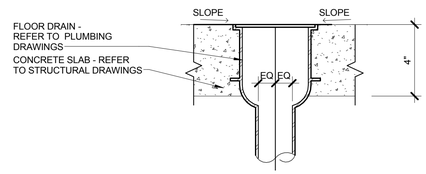

2 IL506 COOLER FLOOR DRAIN
3" = 1'-0"

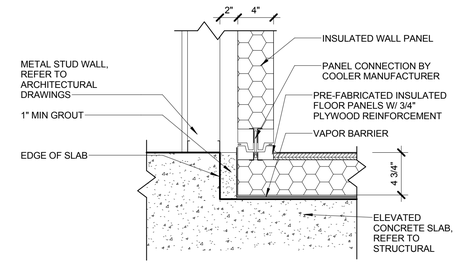

3 IL506 ELEVATED COOLER FLOOR TO WALL DETAIL
1 1/2" = 1'-0"

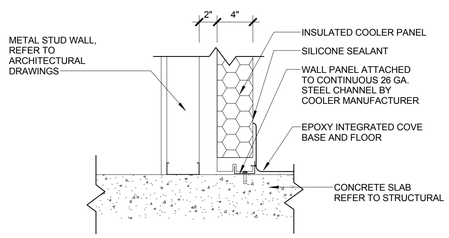

4 IL506 SLAB ON GRADE COOLER FLOOR TO WALL DETAIL
1 1/2" = 1'-0"

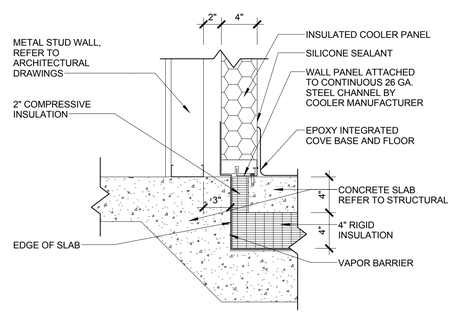

5 IL506 FREEZER FLOOR TO WALL DETAIL
1 1/2" = 1'-0"

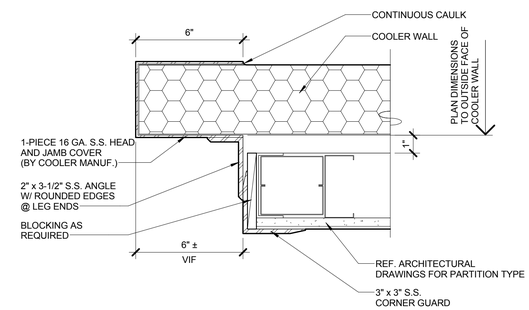

6 IL506 COOLER DOOR JAMB DETAIL
3" = 1'-0"

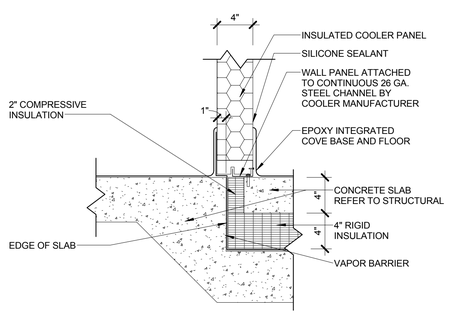

7 IL506 FREEZER TO COOLER DETAIL
1 1/2" = 1'-0"

CRSA
649 E. South Temple
Salt Lake City, UT 84102
801.355.5915

MWL
11798 N. Lakeridge Pkwy.
Ashland, VA 23005
804-228-7473

State of Utah
Department of Administrative Services
DFCM
Division of Facilities
Construction & Management
4110 State Office Building
Salt Lake City, Utah 84114
Phone: (801) 538 - 3018
Fax: (801) 538 - 3267

DFCM APPROVAL STAMP

STATE OF UTAH #134098 MEHRDAD SAMIE LICENSED ARCHITECT
04.28.2014
ARCHITECT-ENGINEER STAMP

Unified State Laboratory Module 2

4501 South 2700 West,
Taylorsville, UT 84118

DFCM #:	13020300
Project #:	B13-024

DATE:	ISSUE TYPE:
APRIL 21, 2014	BID SET
MAY 8, 2015	ADD # 1
CHECKED BY	Checker
DRAWN BY	B. WARRREN

LAB DETAILS

IL506
VOLUME 1

C:\Users\Anne\Vg\Desktop\Revit Local Files\LAB-Casework Utah_Anne\Vg.rvt
5/7/2015 8:47:38 AM

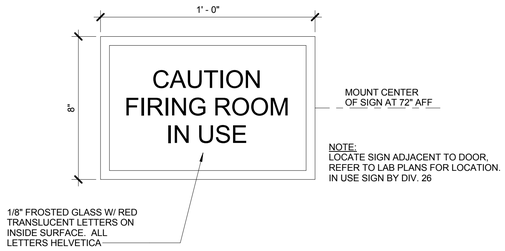

1 IL507 IN USE LIGHT ELEVATION
3" = 1'-0"

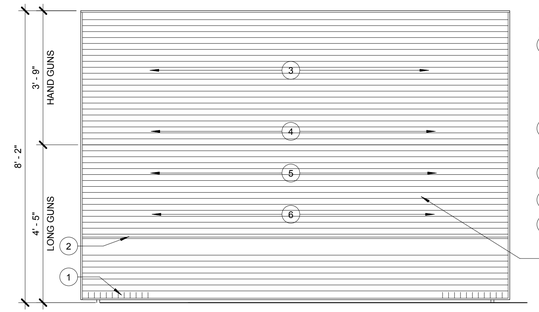

FOR EACH SIDE PROVIDE
THE FOLLOWING
COMPONENTS TO BE:

ATTACHED TO SLOT WALL SYSTEM:

1. GUN STOCK SHELF INSERTS W/ DIVIDERS (11 PER EA. 3 L.F. SECTION)
2. U-SHAPED BARREL BRACKETS W/ RESTS (11 PER EA. 3 L.F. SECTION)
3. OFFSET ANGLED PISTOL HOOKS (3 PER L.F. LONG / 2 PER L.F. SHORT)
4. 1 PER L.F. 2-WAY PISTOL HOOKS
5. 1 PER L.F. RIFLE HOOKS
6. 1 PER 6 L.F. WIRE BASKETS

BASIS OF DESIGN TO BE
SPACESAVER MOBILE UNITS
W/ 2" METAL DYNAMICS
SLAT WALL SYSTEM @ BOTH
SIDES OF EACH A-TYPE
CAROUSEL

2 IL507 MOBILE GUN STORAGE SYSTEM ELEVATION
1/2" = 1'-0"

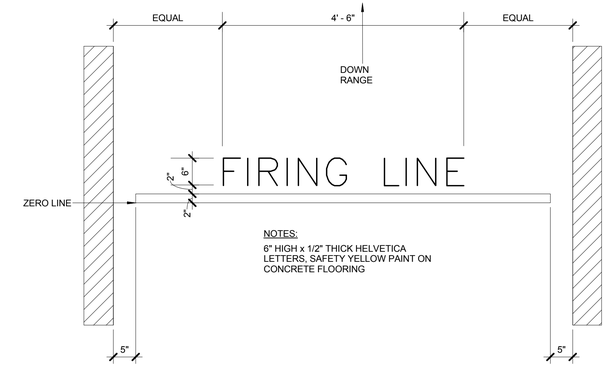

3 IL507 FIRING LINE DETAIL
3/4" = 1'-0"

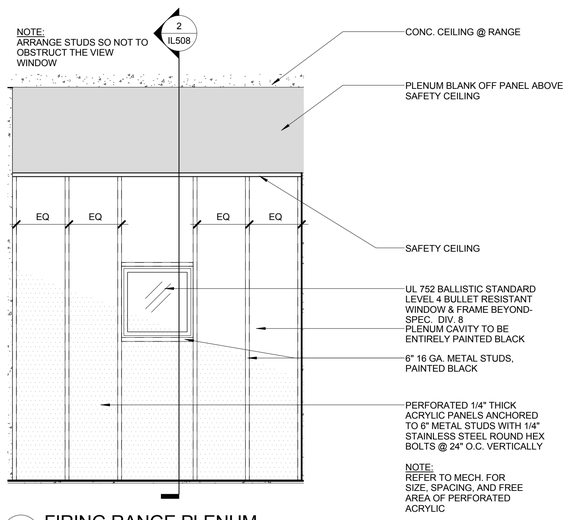

4 IL507 FIRING RANGE PLENUM
1/2" = 1'-0"

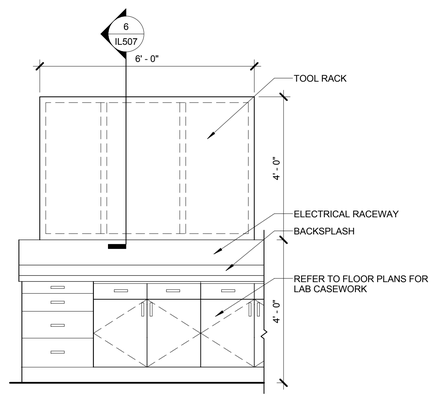

5 IL507 TOOL RACK ELEVATION
1/2" = 1'-0"

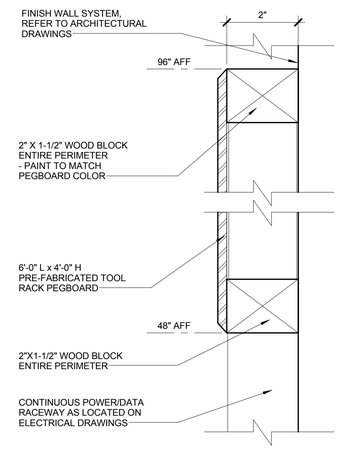

6 IL507 TOOL RACK SECTION
6" = 1'-0"

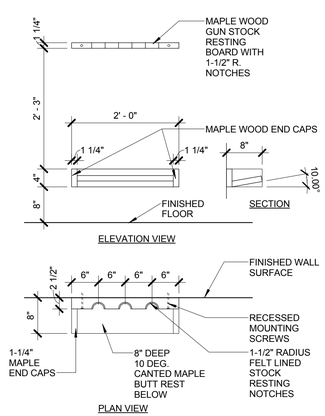

7 IL507 LONG GUN RACK DETAIL
3/4" = 1'-0"

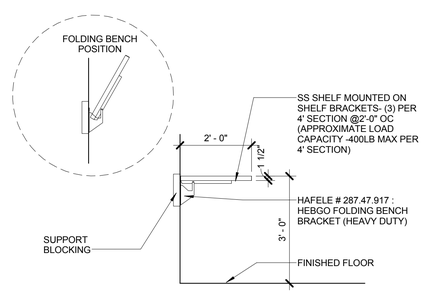

8 IL507 HEAVY DUTY FOLDING SHELF DETAIL
1/2" = 1'-0"

CRSA
649 E. South Temple
Salt Lake City, UT 84102
801.355.5915

MWL
11798 N. Lakeridge Pkwy.
Ashland, VA 23005
804-228-7473

State of Utah
Department of Administrative Services
Division of Facilities
Construction & Management
DFCM
4110 State Office Building
Salt Lake City, Utah 84114
Phone: (801) 538 - 3018
Fax: (801) 538 - 3267

DFCM APPROVAL STAMP

STATE OF UTAH
#134098
MEHRDAD
SAMIE
LICENSED ARCHITECT
04.28.2014

ARCHITECT-ENGINEER STAMP

Unified State Laboratory Module 2

4501 South 2700 West,
Taylorsville, UT 84118

DFCM #: 13020300

Project #: B13-024

DATE:	ISSUE TYPE:
APRIL 21, 2014	BID SET
MAY 8, 2015	ADD # 1
CHECKED BY	Checker
DRAWN BY	B. WARRREN

LAB DETAILS

IL507

VOLUME 1

C:\Users\AnneVig\Desktop\Revit Local Files\LAB-Casework Utah_AnneVig.rvt
5/7/2015 8:47:49 AM

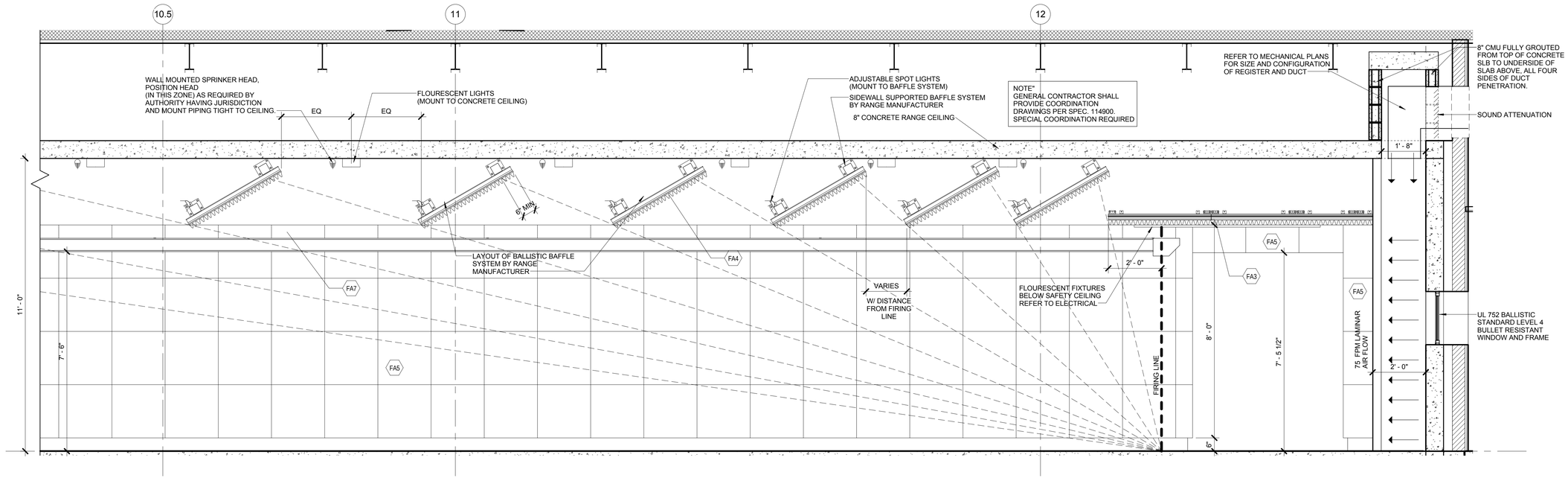

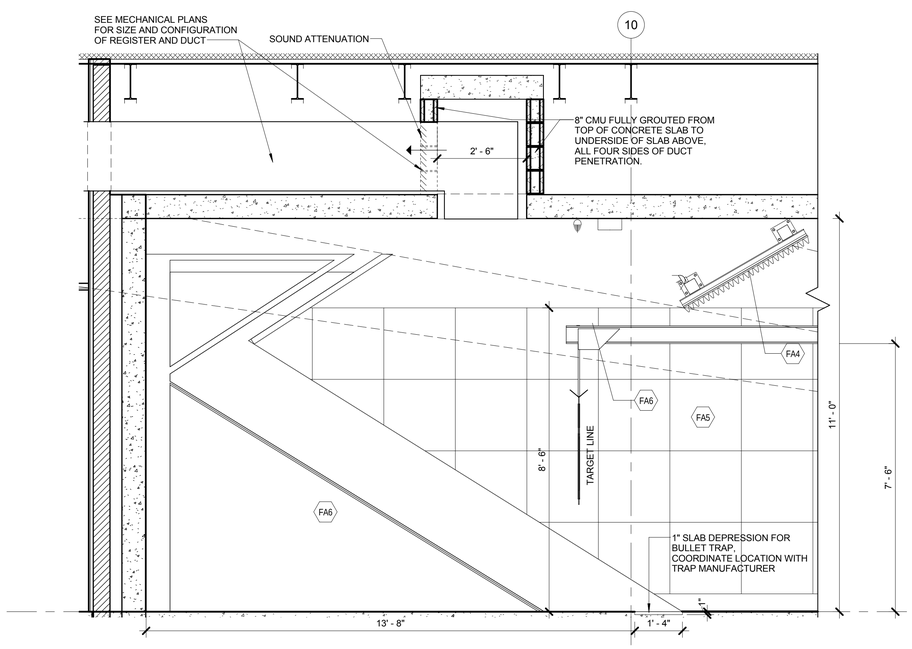

1 / IL508 RANGE SECTION
1/2" = 1'-0"

C:\Users\Amre\Vig\Desktop\Revit Local Files\LAB-Casework Utah_Amre\Vig.rvt
5/7/2015 8:48:02 AM

CRSA
649 E. South Temple
Salt Lake City, UT 84102
801.355.5915

MWL
11798 N. Lakeridge Pkwy.
Ashland, VA 23005
804-228-7473

State of Utah
Department of Administrative Services
Division of Facilities Construction & Management
4110 State Office Building
Salt Lake City, Utah 84114
Phone: (801) 538 - 3018
Fax: (801) 538 - 3267

DFCM APPROVAL STAMP

STATE OF UTAH #13-4038 MEHRDAD SAMIE LICENSED ARCHITECT
04.28.2014
ARCHITECT-ENGINEER STAMP

Unified State Laboratory Module 2

4501 South 2700 West, Taylorsville, UT 84118

DFCM #: 13020300
Project #: B13-024

DATE:	ISSUE TYPE:
APRIL 21, 2014	BID SET
MAY 8, 2015	ADD # 1
CHECKED BY	Checker
DRAWN BY	B. WARRREN

1
LAB DETAILS

IL508
VOLUME 1

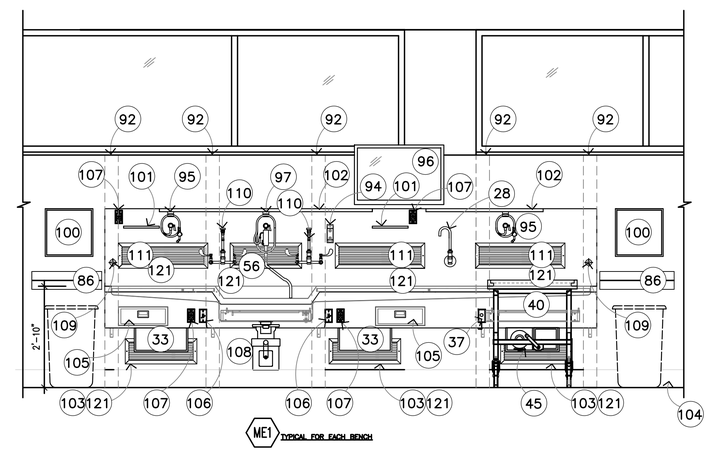

1 AUTOPSY DISSECTION STATION

SCALE 3/4"=1'-0"

CRSA

649 E. South Temple
Salt Lake City, UT 84102
801.355.5915

MWL

11798 N. Lakeridge Pkwy.
Ashland, VA 23005
804-228-7473

State of Utah
Department of Administrative Services
Division of Facilities Construction & Management
4110 State Office Building
Salt Lake City, Utah 84114
Phone: (801) 538 - 3018
Fax: (801) 538 - 3267

DFCM APPROVAL STAMP

STATE OF UTAH #134098 MEHRDAD SAMII LICENSED ARCHITECT

04.28.2014

ARCHITECT-ENGINEER STAMP

Unified State Laboratory Module 2
4501 South 2700 West,
Taylorsville, UT 84118

KEY PLAN

DFCM #: 13020300

Project #: B13-024

DATE:	ISSUE TYPE:
APRIL 21, 2014	BID SET
MAY 8, 2015	ADD # 1

CHECKED BY	B. CARVER
DRAWN BY	B. WARRREN

LAB DETAILS 1

IL509
VOLUME 1

KEY SYMBOLS

- (L) LOCKING
- (M) MONITOR TO BMS
- (EW) DECK MOUNTED DRENCH HOSE EYEWASH FIXTURE
- (CA) COMPRESSED AIR
- (XX) MARINE EDGE COUNTER ELEVATION IN INCHES
- (XX) NON-MARINE EDGE COUNTER ELEVATION IN INCHES
- (X) KEY NOTES
- (XX) EQUIPMENT
- [XXX] ROOM NUMBERS

KEY NOTES

1. PAPER TOWEL DISPENSER- SPEC. 116000
2. COAT HOOK STRIP MOUNTED @54" AFF-SPEC 116000 MOUNT SINGLE HOOK @ 48" CENTERED BELOW HOOK STRIP
3. SAFETY SUPPLY CABINET, REFER TO DETAIL 7/IL505 SPEC 116000
4. 1" DIA INLET PORT FOR HYDROGEN GENERATOR
5. OPEN TO FINISH WALL SURFACE
6. EPOXY DRYING RACK – 18"x36" – SPEC 123450
7. FILLER PANEL – MATCH CASEWORK MATERIAL REFER TO 4/IL510 FOR AUTOPSY END FILLER PANEL CONDITION
8. OMIT FRONT AND BACK APRON FOR 34" HIGH UNDER COUNTER EQUIPMENT.
9. SS SHELVING-SPEC 116000
10. 2 1/2" CORD GROMMET-SPEC 123450
11. CONTROL PANEL FOR FA7 (TARGET TROLLEY)
12. 2'X4' STAINLESS STEEL FOLD DOWN SURFACE – REFER TO DETAIL 8/IL507
13. COUNTERTOP MOUNTED COMPRESSED AIR (CA) TURRET
14. COLD WATER HOSE BIB @54" AFF- BY DIV. 22
15. HIGH DENSITY SHELVING- BY DIV. 10
16. KSSF SUPPORT FRAME- REFER TO DETAIL 9/IL500
17. HOT & COLD MIXING STATION-BY DIV. 22 (W/ 30' OF HOSE U.O.N)
18. MOBILE LIFT PARK
19. UTILITY SINK- BY DIV. 22
20. UNDER COUNTER KNEE WALL SUPPORT –REFER TO ARCHITECTURAL.
21. SPILL CART-SPEC 116000
22. SUPPORT LEG-BY DIV. 12
23. COAT RACK & SHELF-SPEC 116000
24. WALL MOUNTED PAPER ROLL DISPENSER WITH PLASTIC LAMINATE COVERED PLYWOOD BACKBOARD. 36"HX12"H MOUNTED AT 48" AFF TO BOTTOM.
25. DOUBLE KSSF- REFER TO DETAIL 9/IL502
26. ELEVATION TRANSITION POINT
27. MILLWORK-BY DIV. 6
28. FORMALIN SPIGOT-SPEC 117810
29. UNDERCOUNTER TYPE I WATER POLISHER-BY DIV. 22
30. ALL STAINLESS STEEL CASEWORK IN AUTOPSY SUITES WILL HAVE MARINE EDGE COUNTER TOPS.
31. GAS MANIFOLD @66" A.F.F. (BOTTOM) –BY DIV. 22
32. FLOOR DRAIN- BY DIV. 22
33. DISSECTION TABLE SHELF BY MFR
34. STAINLESS STEEL SCRUB SINK- BY DIV. 22
35. LEVEL 4 BULLET RESISTANT DOOR/FRAME-SPEC 083950
36. 'IN USE' LIGHT-DETAIL-1/IL507-BY DIV. 26
37. PUMP CONTROL FOR FORMALIN DISPENSER
38. MAPLE COUNTER-2" THICK W/ 3/4" X 3 1/2" MAPLE BACK SPLASH W/ 4" LEADING EDGE OVERHANG- SPEC 123450
39. 8" DIA. EXHAUST DUCT FROM PROJECTILE RECOVERY TANK. DIV. 23 TO CONNECT EXHAUST
40. MOBILE DISSECTING WING-SPEC 117810
41. WALL MOUNTED LONG GUN RACK – REFER TO 7/IL507
42. PAINTED 3" NUMBER AND ARROW WHITE PAINT STENCILED ON RUBBER PANELS AT 1 YARD INCREMENTS MEASURED FROM THE ZERO POINT OF THE FIRING LINE. ACCURACY REQUIRED WITHIN 1/16".
43. OPEN ALL OF THE WAY THROUGH
44. GAS ANNUNCIATOR PANEL- BY DIV. 22
45. FORMALIN CONTAINER AND DISPENSING PUMP ON 18"D SHELF –SPEC 117810
46. PAINTED FIRING LINE- REFER TO DETAIL 3/IL507
47. FLUSHING FLOOR DRAIN-BY DIV. 22
48. CONTROLS FOR RANGE AIR HANDLING SYSTEM- DIV. 23
49. 36"L X 12" W X 1" THICK MAPLE WOOD SHELF MOUNT & 48" AFF-SPEC 123450
50. CW CONNECTION @ 48" A.F.F.-REFER TO PLUMB. VERIFY LOCATION BASED ON APPROVED SHOP DRAWINGS OF PRT
51. MANUAL OPERATED BLACKOUT SHADE-SPEC 122413
52. LOW ELEVATION EXHAUST- REFER TO MECHANICAL
53. BUG ZAPPER MOUNTED @ +84" A.F.F.-BY DIV 26 –SPEC 116000
54. HAMPER- NIC
55. 2-1/2" X 18" CORD SLOT
56. EXHAUST VENTS BY DISSECTING STATION MFR. (VERIFY 8"X24") –COORDINATE DUCTWORK WITH DIV. 23
57. ACID VENT PIPE- REFER TO DETAIL 2/IL500 AND MECHANICAL
58. ADJUSTABLE TOOL RACK-SPEC 114900 REFER TO DETAIL 5/IL507
59. 12"X12"X12" FLOOR SINK-BY DIV. 22
60. PRESSURE DIFFERENTIAL INDICATOR @ 54" AFF- BY DIV. 23
61. U.L. 4 BULLET RESISTANT WINDOW & FRAME- SPEC 085653
62. DIRECT CONNECT EXHAUST- BY DIV. 23
63. DIGITAL READOUT FOR SCALE-SPEC 117810
64. ACID VENT DUCT- REFER TO TACDx ELEVATION ON IL004- BY DIV. 23
65. BELOW COUNTER RECEPTACLE RECESSED INTO SERVICE CLOSURE PANEL- REFER TO ELECTRICAL DRAWINGS.
66. TRENCH DRAIN- BY DIV. 22
67. USER CONTROLLED AIR FLOW SWITCH-BY DIV. 23
68. BULLET TRAP/RANGE SIGN MOUNTED AT 60" AFF TO BOTTOM-SPEC. 114900
69. PRT SIGN MOUNTED AT 60" AFF TO BOTTOM. –SPEC. 114900
70. WALL MOUNTED FLAT PANEL MONITOR-BY DIV. 27
71. COOLER CONTROL PANEL
72. IN-WALL FLUSH VALVE FOR FLUSHING FLOOR DRAINS – BY DIV. 22
73. EXISTING AMMO STORAGE SHELVING SYSTEM TO BE RELOCATED TO NEW FACILITY BY CONTRACTOR
74. BACKDRAFT EXHAUST GRILLE– BY DIV. 23 REFER TO MECH. FOR SIZE, MOUNT ABOVE COUNTERTOP BACKSPLASH
75. ADA COMPLIANT S.S. SINK-BY DIV. 22
76. REMOVABLE EVIDENCE RACK MOUNTED TO MOBILE TABLE-REFER TO DETAIL 2/IL502-SPEC 123450
77. UMBILICAL SERVICE CHASE-SPEC 123450
78. DIRECT CONNECT PRT TO CW
79. COMPRESSED AIR- BY DIV. 23
80. TYPE 3 RO WATER FAUCET –BY DIV. 22 –COUNTER MOUNTED
81. TYPE 1 DI WATER POLISHER SPEC 116000 – WALL MOUNTED U.O.N. (BLOCKING REQUIRED)
82. GLASS WALL PANEL-REFER TO ARCH.
83. HUB DRAIN FOR BODY FREEZER CONDENSATE BY DIV. 22
84. HUB DRAIN- BY DIV. 22
85. MONITOR AND INTERCOM TO OUTSIDE PEDESTAL – BY DIV. 26
86. S.S. WALL GUARD – REFER TO DET. 6/IL505. IN ROOMS 125, 125A AND 125B S.S. WALL GUARDS ARE TO BE BY COOLER MFR.
87. S.S. CORNER GUARD – REFER TO DET. 6/IL505
88. ADJUSTABLE DOCK LIGHT- BY DIV. 26
89. X-RAY ROOM TO BE R.F. SHIELDED PER QUALIFIED PHYSICIST CONSULTANT PRIOR TO CONSTRUCTION.
90. INTEGRAL COUNTERTOP SIDE SPLASH
91. MOP AND BROOM HOLDER RACK-SPEC. 116000
92. STEEL STRUCTURE TO SUPPORT DISSECTING STATION –BY STRUCTURAL ENGINEER
93. APPROXIMATE LOCATION OF EVAPORATING UNITS IN COLD ROOMS MOUNTED NEAR CEILING
94. SCALE POLE BRACKET-SPEC 117810
95. SPRAY HOSE ASSEMBLY – SPEC. 117800
96. MONITOR MOUNTED ON ARTICULATING SWIVEL ARM BRACKET-BY DIV. 27, WALL BLOCKING AS REQ'D
97. HYDRO ASPIRATOR – SPEC. 117810
98. STUB FOR FUTURE DIRECT EXHAUST AND SNORKEL CONNECTION- BY DIV. 23
99. 3' H X 4' W MARKER BOARD-SPEC. 101100
100. ARTICULATING MARKER BOARD-SPEC 116000
101. S.S. SHELF – 12"L x 10"D
102. S.S. SHELF – 11"D, PROVIDE HOLE IN SHELF FOR SCALE POST AND ALIGN WITH SCALE POST BRACKET
103. MATCHING BACK DRAFT WALL VENTS SUPPLIED BY DISSECTION TABLE MFR SPEC 117810 – DIV. 23 WILL CONNECT THE EXHAUST.
104. 6" INTEGRAL WALL BASE- REFER TO FINISH SCHEDULE
105. INSTRUMENT DRAWER-SPEC. 117810
106. DISPOSAL SWITCH
107. GFCI OUTLET W/ WEATHERPROOF COVER
108. 2 HP DISPOSAL- SPEC. 117810
109. END RINSE CONTROL VALVE
110. HW & CW MIXING FAUCET
111. EXHAUST VENTS BY DISSECTING STATION MFR. (8"X30") –COORDINATE DUCTWORK WITH DIV. 23
112. UV PASS-THRU CABINET WITH VISION DOORS SPEC 116000- REFER TO DETAIL 5/IL504
113. ABOVE COUNTER RECEPTACLE RECESSED INTO SERVICE CLOSURE PANEL OR CHASE- REFER TO ELECTRICAL DRAWINGS.
114. STAINLESS STEEL CANOPY-BY DIV. 23
115. CURTAIN AND TRACK- BY DIV. 10
116. MARBLE TABLE – SPEC. 116000
117. TASK LIGHT- BY DIV. 26
118. LIQUID NITROGEN DEWAR, NIC
119. 1" DIA. HOLE W/CAP FOR DI WATER DELIVERY DEVICE.
120. (2) PADLOCK RACK MOUNTED ON WALL @54" AFF AND 48" AFF
121. EXHAUST VENTS TO BE HAVE OPPOSED BLADE DAMPER ACCESSIBLE THROUGH THE FACE OF THE GRILL FOR AIR BALANCING –BY DISSECTING TABLE MFR
122. POWER FROM BELOW- BY DIV. 26
123. STUB OUT HVAC FOR FUTURE ME6
124. CURTAIN-BY DIV. 10
125. HEIGHT DETERMINED BY ME13
126. STOP REAGENT SHELF FOR TALL CABINETS
127. CONTROL FOR ME25 POWER AND DATA BY DIV. 26

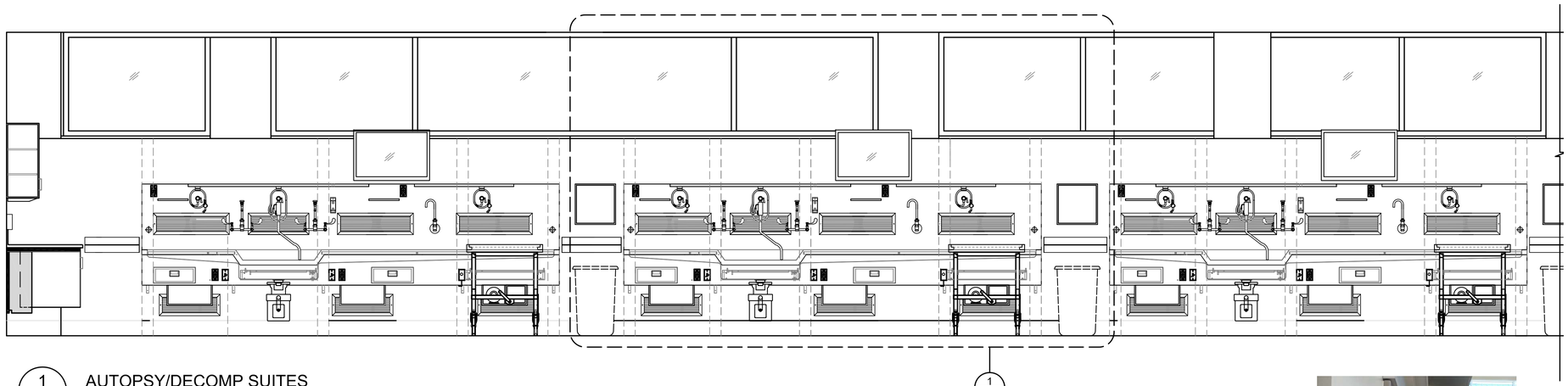

1 IL510 AUTOPSY/DECOMP SUITES
SCALE: 1/2" = 1'-0"

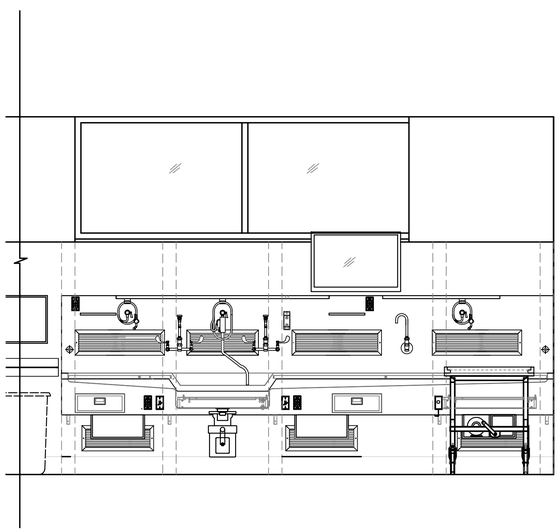

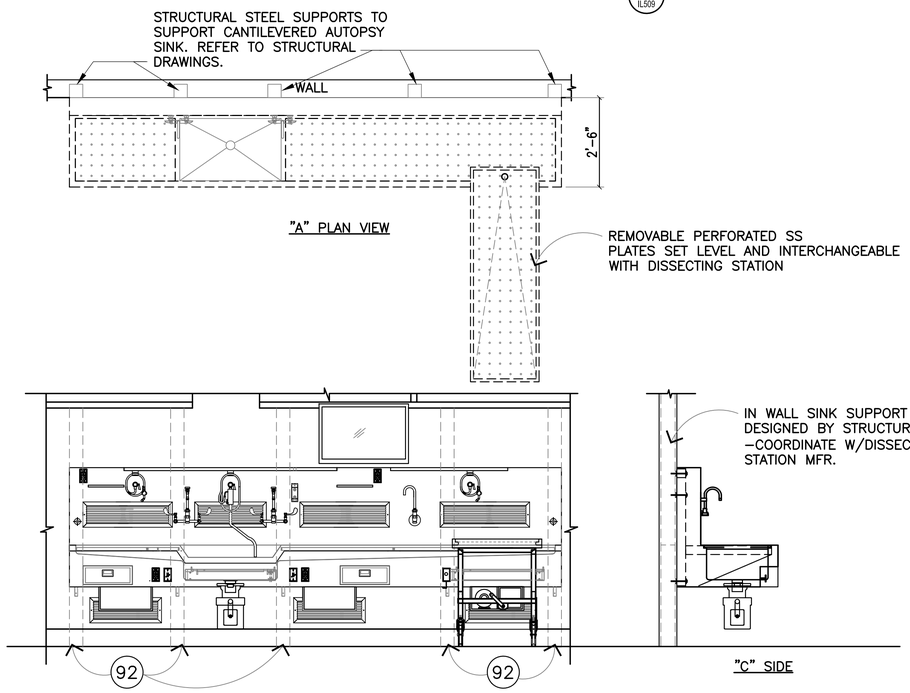

2 IL510 AUTOPSY STATION SUPPORTS
SCALE: 1/2" = 1'-0"

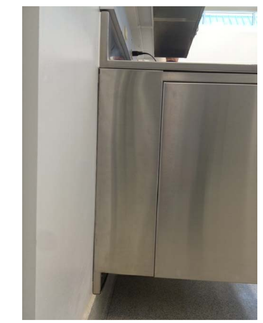

4 IL510 FILLER PANEL AT AUTOPSY SS CASEWORK
SCALE: 1/2" = 1'-0"

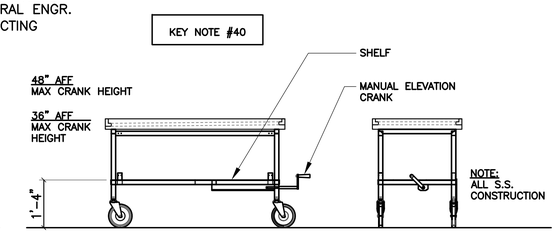

3 IL510 MOBILE DISSECTION WING
SCALE: 1/2" = 1'-0"

KEY SYMBOLS

- (L) LOCKING
- (M) MONITOR TO BMS
- (EW) DECK MOUNTED DRENCH HOSE EYEWASH FIXTURE
- (CA) COMPRESSED AIR
- (XX) MARINE EDGE COUNTER ELEVATION IN INCHES
- (XX) NON-MARINE EDGE COUNTER ELEVATION IN INCHES
- (X) KEY NOTES
- (XX) EQUIPMENT
- XXX ROOM NUMBERS

KEY NOTES

1. PAPER TOWEL DISPENSER– SPEC. 116000
2. COAT HOOK STRIP MOUNTED @54" AFF–SPEC 116000 MOUNT SINGLE HOOK @ 48" CENTERED BELOW HOOK STRIP
3. SAFETY SUPPLY CABINET, REFER TO DETAIL 7/IL505 SPEC 116000
4. 1" DIA INLET PORT FOR HYDROGEN GENERATOR
5. OPEN TO FINISH WALL SURFACE
6. EPOXY DRYING RACK – 18"x36" – SPEC 123450
7. FILLER PANEL – MATCH CASEWORK MATERIAL REFER TO 4/IL510 FOR AUTOPSY END FILLER PANEL CONDITION
8. OMIT FRONT AND BACK APRON FOR 34" HIGH UNDER COUNTER EQUIPMENT.
9. SS SHELVING–SPEC 116000
10. 2 1/2" CORD GROMMET–SPEC 123450
11. CONTROL PANEL FOR FA7 (TARGET TROLLEY)
12. 2'X4' STAINLESS STEEL FOLD DOWN SURFACE – REFER TO DETAIL 8/IL507
13. COUNTERTOP MOUNTED COMPRESSED AIR (CA) TURRET
14. COLD WATER HOSE BIB @54" AFF– BY DIV. 22
15. HIGH DENSITY SHELVING– BY DIV. 10
16. KSSF SUPPORT FRAME– REFER TO DETAIL 9/IL500
17. HOT & COLD MIXING STATION–BY DIV. 22 (W/ 30' OF HOSE U.O.N)
18. MOBILE LIFT PARK
19. UTILITY SINK– BY DIV. 22
20. UNDER COUNTER KNEE WALL SUPPORT –REFER TO ARCHITECTURAL
21. SPILL CART–SPEC 116000
22. SUPPORT LEG–BY DIV. 12
23. COAT RACK & SHELF–SPEC 116000
24. WALL MOUNTED PAPER ROLL DISPENSER WITH PLASTIC LAMINATE COVERED PLYWOOD BACKBOARD. 36"HX12"H MOUNTED AT 48" AFF TO BOTTOM.
25. DOUBLE KSSF– REFER TO DETAIL 9/IL502
26. ELEVATION TRANSITION POINT
27. MILLWORK–BY DIV. 6
28. FORMALIN SPIGOT–SPEC 117810
29. UNDERCOUNTER TYPE I WATER POLISHER–BY DIV. 22
30. ALL STAINLESS STEEL CASEWORK IN AUTOPSY SUITES WILL HAVE MARINE EDGE COUNTER TOPS.
31. GAS MANIFOLD @66" A.F.F. (BOTTOM) –BY DIV. 22
32. FLOOR DRAIN– BY DIV. 22
33. DISSECTION TABLE SHELF BY MFR
34. STAINLESS STEEL SCRUB SINK– BY DIV. 22
35. LEVEL 4 BULLET RESISTANT DOOR/FRAME–SPEC 083950
36. 'IN USE' LIGHT–DETAIL–1/IL507–BY DIV. 26
37. PUMP CONTROL FOR FORMALIN DISPENSER
38. MAPLE COUNTER–2" THICK W/ 3/4" X 3 1/2" MAPLE BACK SPLASH W/ 4" LEADING EDGE OVERHANG– SPEC 123450
39. 8" DIA. EXHAUST DUCT FROM PROJECTILE RECOVERY TANK. DIV. 23 TO CONNECT EXHAUST
40. MOBILE DISSECTING WING–SPEC 117810
41. WALL MOUNTED LONG GUN RACK – REFER TO 7/IL507
42. PAINTED 3" NUMBER AND ARROW WHITE PAINT STENCILED ON RUBBER PANELS AT 1 YARD INCREMENTS MEASURED FROM THE ZERO POINT OF THE FIRING LINE. ACCURACY REQUIRED WITHIN 1/16".
43. OPEN ALL OF THE WAY THROUGH
44. GAS ANNUNCIATOR PANEL– BY DIV. 22
45. FORMALIN CONTAINER AND DISPENSING PUMP ON 18"D SHELF –SPEC 117810
46. PAINTED FIRING LINE– REFER TO DETAIL 3/IL507
47. FLUSHING FLOOR DRAIN–BY DIV. 22
48. CONTROLS FOR RANGE AIR HANDLING SYSTEM– DIV. 23
49. 36"L X 12" W X 1" THICK MAPLE WOOD SHELF MOUNT & 48" AFF–SPEC 123450
50. CW CONNECTION @ 48" A.F.F.–REFER TO PLUMB. VERIFY LOCATION BASED ON APPROVED SHOP DRAWINGS OF PRT
51. MANUAL OPERATED BLACKOUT SHADE–SPEC 122413
52. LOW ELEVATION EXHAUST– REFER TO MECHANICAL
53. BUG ZAPPER MOUNTED @ +84" A.F.F.–BY DIV 26 –SPEC 116000
54. HAMPER– NIC
55. 2-1/2" X 18" CORD SLOT
56. EXHAUST VENTS BY DISSECTING STATION MFR. (VERIFY 8"X24") –COORDINATE DUCTWORK WITH DIV. 23
57. ACID VENT PIPE– REFER TO DETAIL 2/IL500 AND MECHANICAL
58. ADJUSTABLE TOOL RACK–SPEC 114900 REFER TO DETAIL 5/IL507
59. 12"X12"X12" FLOOR SINK–BY DIV. 22
60. PRESSURE DIFFERENTIAL INDICATOR @ 54" AFF– BY DIV. 23
61. U.L. 4 BULLET RESISTANT WINDOW & FRAME– SPEC 085653
62. DIRECT CONNECT EXHAUST– BY DIV. 23
63. DIGITAL READOUT FOR SCALE–SPEC 117810
64. ACID VENT DUCT– REFER TO TACDx ELEVATION ON IL004– BY DIV. 23
65. BELOW COUNTER RECEPTACLE RECESSED INTO SERVICE CLOSURE PANEL– REFER TO ELECTRICAL DRAWINGS.
66. TRENCH DRAIN– BY DIV. 22
67. USER CONTROLLED AIR FLOW SWITCH–BY DIV. 23
68. BULLET TRAP/RANGE SIGN MOUNTED AT 60" AFF TO BOTTOM–SPEC. 114900
69. PRT SIGN MOUNTED AT 60" AFF TO BOTTOM. –SPEC. 114900
70. WALL MOUNTED FLAT PANEL MONITOR–BY DIV. 27
71. COOLER CONTROL PANEL
72. IN-WALL FLUSH VALVE FOR FLUSHING FLOOR DRAINS – BY DIV. 22
73. EXISTING AMMO STORAGE SHELVING SYSTEM TO BE RELOCATED TO NEW FACILITY BY CONTRACTOR
74. BACKDRAFT EXHAUST GRILLE– BY DIV. 23 REFER TO MECH. FOR SIZE, MOUNT ABOVE COUNTERTOP BACKSPLASH
75. ADA COMPLIANT S.S. SINK–BY DIV. 22
76. REMOVABLE EVIDENCE RACK MOUNTED TO MOBILE TABLE–REFER TO DETAIL 2/IL502–SPEC 123450
77. UMBILICAL SERVICE CHASE–SPEC 123450
78. DIRECT CONNECT PRT TO CW
79. COMPRESSED AIR– BY DIV. 23
80. TYPE 3 RO WATER FAUCET –BY DIV. 22 –COUNTER MOUNTED
81. TYPE 1 DI WATER POLISHER SPEC 116000 – WALL MOUNTED U.O.N. (BLOCKING REQUIRED)
82. GLASS WALL PANEL–REFER TO ARCH.
83. HUB DRAIN FOR BODY FREEZER CONDENSATE BY DIV. 22
84. HUB DRAIN– BY DIV. 22
85. MONITOR AND INTERCOM TO OUTSIDE PEDESTAL – BY DIV. 26
86. S.S. WALL GUARD – REFER TO DET. 6/IL505. IN ROOMS 125, 125A AND 125B S.S. WALL GUARDS ARE TO BE BY COOLER MFR.
87. S.S. CORNER GUARD – REFER TO DET. 6/IL505
88. ADJUSTABLE DOCK LIGHT– BY DIV. 26
89. X-RAY ROOM TO BE R.F. SHIELDED PER QUALIFIED PHYSICIST CONSULTANT PRIOR TO CONSTRUCTION.
90. INTEGRAL COUNTERTOP SIDE SPLASH
91. MOP AND BROOM HOLDER RACK–SPEC. 116000
92. STEEL STRUCTURE TO SUPPORT DISSECTING STATION –BY STRUCTURAL ENGINEER
93. APPROXIMATE LOCATION OF EVAPORATING UNITS IN COLD ROOMS MOUNTED NEAR CEILING
94. SCALE POLE BRACKET–SPEC 117810
95. SPRAY HOSE ASSEMBLY – SPEC. 117800
96. MONITOR MOUNTED ON ARTICULATING SWIVEL ARM BRACKET–BY DIV. 27, WALL BLOCKING AS REQ'D
97. HYDRO ASPIRATOR – SPEC. 117810
98. STUB FOR FUTURE DIRECT EXHAUST AND SNORKEL CONNECTION– BY DIV. 23
99. 3' H X 4' W MARKER BOARD–SPEC. 101100
100. ARTICULATING MARKER BOARD–SPEC 116000
101. S.S. SHELF – 12"L x 10"D
102. S.S. SHELF – 11"D, PROVIDE HOLE IN SHELF FOR SCALE POST AND ALIGN WITH SCALE POST BRACKET
103. MATCHING BACK DRAFT WALL VENTS SUPPLIED BY DISSECTION TABLE MFR SPEC 117810 – DIV. 23 WILL CONNECT THE EXHAUST.
104. 6" INTEGRAL WALL BASE– REFER TO FINISH SCHEDULE
105. INSTRUMENT DRAWER–SPEC. 117810
106. DISPOSAL SWITCH
107. GFCI OUTLET W/ WEATHERPROOF COVER
108. 2 HP DISPOSAL– SPEC. 117810
109. END RINSE CONTROL VALVE
110. HW & CW MIXING FAUCET
111. EXHAUST VENTS BY DISSECTING STATION MFR. (8"X30") –COORDINATE DUCTWORK WITH DIV. 23
112. UV PASS–THRU CABINET WITH VISION DOORS SPEC 116000– REFER TO DETAIL 5/IL504
113. ABOVE COUNTER RECEPTACLE RECESSED INTO SERVICE CLOSURE PANEL OR CHASE– REFER TO ELECTRICAL DRAWINGS.
114. STAINLESS STEEL CANOPY–BY DIV. 23
115. CURTAIN AND TRACK– BY DIV. 10
116. MARBLE TABLE – SPEC. 116000
117. TASK LIGHT– BY DIV. 26
118. LIQUID NITROGEN DEWAR, NIC
119. 1" DIA. HOLE W/CAP FOR DI WATER DELIVERY DEVICE.
120. (2) PADLOCK RACK MOUNTED ON WALL – @54" AFF AND 48" AFF
121. EXHAUST VENTS TO BE HAVE OPPOSED BLADE DAMPER ACCESSIBLE TROUGH THE FACE OF THE GRILL FOR AIR BALANCING –BY DISSECTING TABLE MFR
122. POWER FROM BELOW– BY DIV. 26
123. STUB OUT HVAC FOR FUTURE MFR
124. CURTAIN–BY DIV. 10
125. HEIGHT DETERMINED BY ME13
126. STOP REAGENT SHELF FOR TALL CABINETS
127. CONTROL FOR ME25 POWER AND DATA BY DIV. 26

CRSA
649 E. South Temple
Salt Lake City, UT 84102
801.355.5915

MWL
11798 N. Lakeridge Pkwy.
Ashland, VA 23005
804-228-7473

State of Utah
Department of Administrative Services
Division of Facilities Construction & Management
4110 State Office Building
Salt Lake City, Utah 84114
Phone: (801) 538 - 3018
Fax: (801) 538 - 3267

DFCM APPROVAL STAMP

STATE OF UTAH #13-14098 MEHDI NAMI LICENSED ARCHITECT
04.28.2014
ARCHITECT-ENGINEER STAMP

Unified State Laboratory Module 2
4501 South 2700 West,
Taylorsville, UT 84118

KEY PLAN

DFCM #: 13020300
Project #: B13-024

DATE:	ISSUE TYPE:
APRIL 21, 2014	BID SET
MAY 8, 2015	ADD # 1

CHECKED BY	B. CARVER
DRAWN BY	B. WARRREN

LAB DETAILS 1

IL510
VOLUME 1

VAN BOERUM
& FRANK ASSOCIATES, INC.
CONSULTING ENGINEERS

ADDENDUM #1

DATE: May 8, 2015

PROJECT NO: 13245

PROJECT: Unified State Laboratory Module 2

DIVISION – 22 & 23

DRAWINGS

SHEET - MH102B
1. Remove (Qty.2) 2"Ø exhaust connections to laboratory drying cabinets.

SHEET - MH103A
1. Revise the location of canopy exhaust hood EH-2 and add sidewall exhaust grill behind laboratory sink in Pesticide Formulation Extraction Lab 301A.

SHEET - MH105B
1. Revised plan to show condensing unit called out by note 4.

SHEET - MP101A
1. Add keyed note callouts to identify wall mounted CO2 sensors. (Qty. 6) callouts added.

SHEET - MP101B
1. Add keyed note callout to identify wall mounted CO sensor in Sallyport.

SHEET - PE101B
1. Add OCHA in Sally Port 121 and associated SA piping extended from VEB 2 113 on Sheet PE101C.
2. Add HB-1 in Sally Port 121.

SHEET - PE101C
1. Add ¾" SA piping and extend to OCHA in Sally Port 121 on Sheet PE101B.

SHEET - PE102A
1. Add EW-1 at LS-1 in Bio/Serology 213
2. Add natural gas connection to fume hood FH6-ADA, extend ¾" NG from corridor to fume hood and add emergency shut-off switch and solenoid valve on new NG piping. New Keyed Notes 9 & 10 added.

SHEET - PE102B
1. Changed fume hood FH8-1 in ID/Impressions 212 lab to FH8-1SS.
2. Add RG-1 pure water fixture at LS-2 in ID/Impressions 212 lab.
3. Add LS-1 sink callout to sink in Chemistry/Trace 211.

SHEET - PE102C
1. Add EW-1 at LS-2 lab sink in Chem Proc/Exam 205B.
2. Add EW-1 at LS-2 lab sink in FA Lab 205.

SHEET - PW102A

1. Add FD-3 floor drain at the emergency shower station in Extractions 215.

SHEET - PW102B

1. Add waste connection to fume hood FH8-1SS in ID/Impressions 212 lab.
2. Add FD-3 floor drain at emergency shower station in ID/Impressions 212 lab.

SHEET - PW102C

1. Add FD-3 floor drain at emergency shower station in Chem Proc/Exam 205B.

End of Addendum

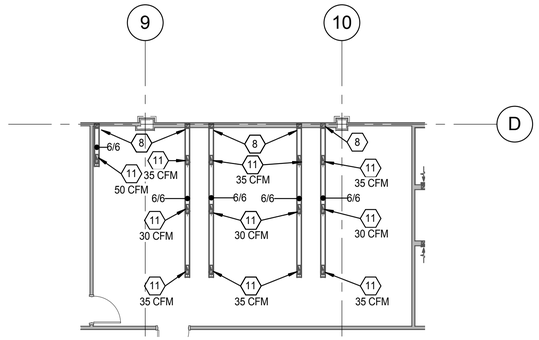

INSTRUMENT LAB 211B CABINET DUCT PLAN (2 / MH102B)

1/8" = 1'-0"

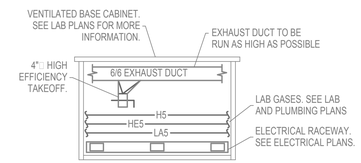

VENTILATED BASE CABINET DETAIL (3 / MH102B)

NOT TO SCALE

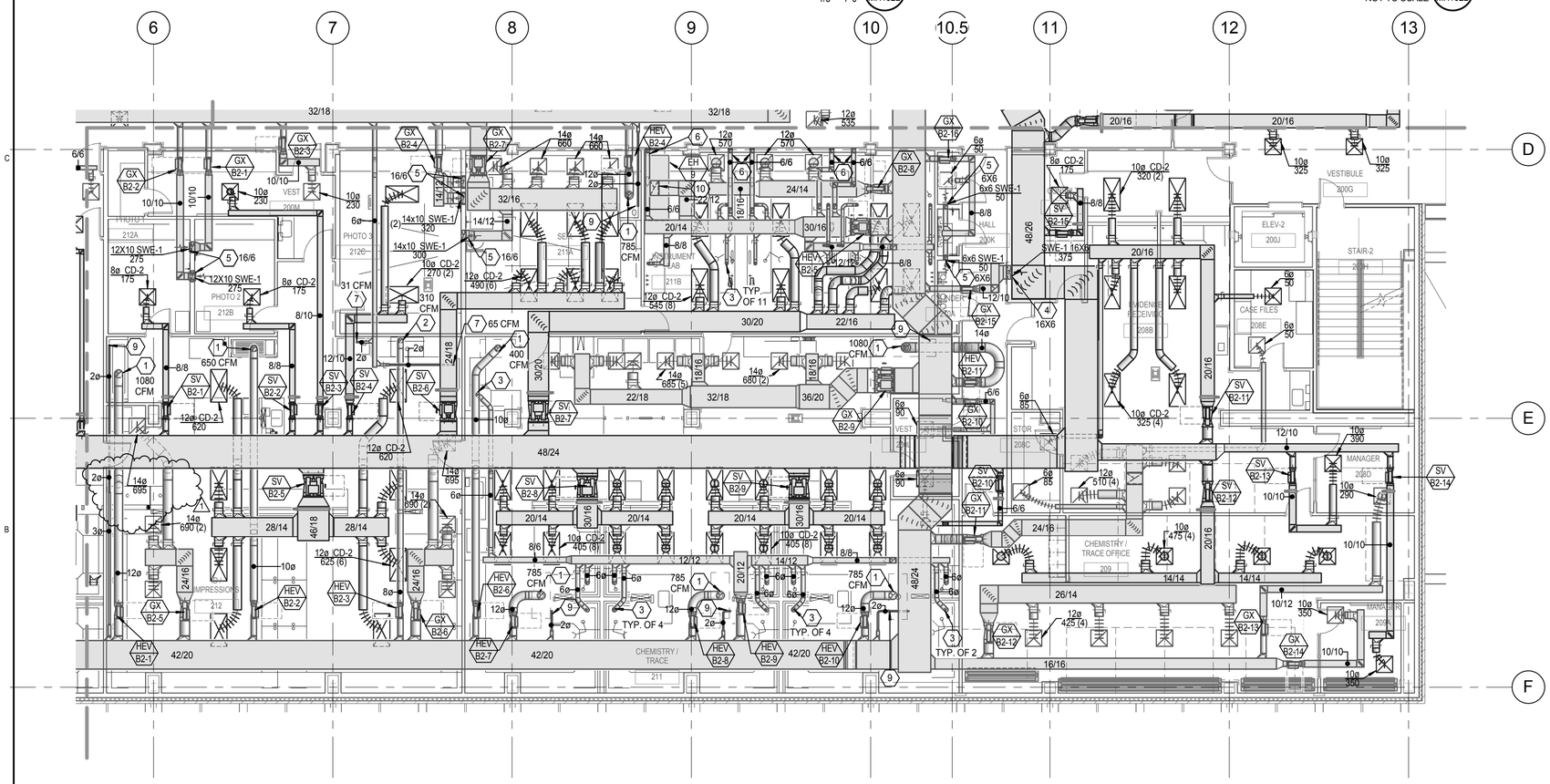

LEVEL 2 MECHANICAL PLAN AREA B (1 / MH102B)

1/8" = 1'-0"

N

KEYED NOTES

1. CONNECT EXHAUST DUCT TO FUME HOOD. INSTALL SASH STOP AT 18". BALANCE TO 100 FPM FACE VELOCITY AT 18" SASH HEIGHT. EXHAUST DUCT SHALL BE WELDED 304 STAINLESS STEEL FROM HOOD CONNECTION TO MEDIUM PRESSURE MAIN. APPROXIMATE EXHAUST AIRFLOW NOTED.
2. CONNECT EXHAUST DUCT TO POWDER HOOD VENTILATION STATION. BALANCE EXHAUST FLOW TO 100 FPM FACE VELOCITY AT SASH WORKING HEIGHT. EXHAUST DUCT SHALL BE WELDED 304 STAINLESS STEEL FROM HOOD CONNECTION TO MEDIUM PRESSURE MAIN. APPROXIMATE AIRFLOW NOTED.
3. CONNECT EXHAUST DUCT TO SNORKEL WITH 4" DIA. DUCT. BALANCE TO 100 CFM. COORDINATE ACTUAL SIZE AND EXHAUST AIRFLOW RATE WITH EQUIPMENT SUPPLIER.
4. EXHAUST DUCT TO DROP DOWN IN 6" WALL CAVITY TO SIDEWALL EXHAUST GRILL. EXHAUST DUCT IN WALL SHALL BE OF THE SIZE NOTED. MOUNT SIDEWALL EXHAUST GRILL AT COUNTER TOP HEIGHT. COORDINATE EXACT HEIGHT WITH CASEWORK SUBMITTAL.
5. EXHAUST DUCT TO DROP DOWN IN 6" WALL CAVITY TO LOW SIDEWALL EXHAUST GRILL. EXHAUST DROP IN WALL SHALL BE OF THE SIZE NOTED. MOUNT LOW SIDEWALL EXHAUST GRILL AT 1'-0" AFF.
6. EXHAUST DUCT TO DROP DOWN IN WALL CAVITY TO SERVE THE VENTILATED BASE CABINETS. SEE 2/MH102B FOR CONTINUATION.
7. CONNECT TO EQUIPMENT EXHAUST CONNECTION WITH 2" DIAMETER SCHEDULE 80 PVC. PVC EXHAUST PIPE SHALL BE CONNECTED TO EXHAUST SYSTEM AS SHOWN. PROVIDE AND INSTALL BUTTERFLY VALVE FOR BALANCING. LOCATE IN VERTICAL RISER FOR ACCESSIBILITY. BALANCE TO AIRFLOW NOTED. CONFIRM EXHAUST REQUIREMENTS WITH EQUIPMENT MANUFACTURER.
8. EXHAUST DUCT TO DROP DOWN IN WALL FROM ABOVE. RUN HORIZONTALLY CONCEALED WITHIN THE VENTILATED BASE CABINETS. RUN DUCTWORK AS HIGH POSSIBLE WITHIN BASE CABINET. SEE DETAIL 3/MH102B.
9. CONNECT TO VENTED ACID STORAGE BASE CABINET WITH 2" DIAMETER SCHEDULE 80 PVC. PVC SHALL BE CONNECTED TO EXHAUST DUCT AS SHOWN. PROVIDE AND INSTALL BUTTERFLY VALVE FOR BALANCING AND BALANCE TO 25 CFM. SEE LABORATORY PLANS FOR INSTALLATION DETAILS.
10. CONNECT EXHAUST DUCT TO EXHAUST COLLAR ON CANOPY EXHAUST HOOD. BALANCE TO AIRFLOW NOTED IN EXHAUST HOOD SCHEDULE.
11. PROVIDE AND INSTALL 4" DIAMETER HIGH EFFICIENCY TAKEOFF WITH MANUAL BALANCING DAMPER ORIENTED DOWN, BALANCE TO AIRFLOW NOTED.

KEY PLAN

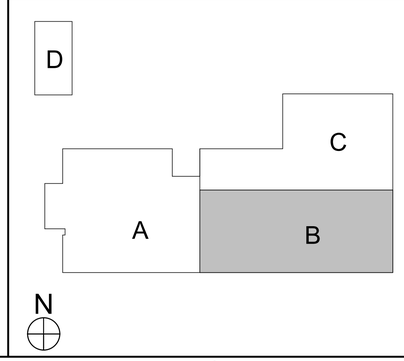

CRSA
649 E. South Temple
Salt Lake City, UT 84102
801.355.5915

MWL
11798 N. Lakeridge Pkwy.
Ashland, VA 23005
804-228-7473

State of Utah
Department of Administrative Services
Division of Facilities Construction & Management
4110 State Office Building
Salt Lake City, Utah 84114
Phone: (801) 538 - 3018
Fax: (801) 538 - 3267

DFCM APPROVAL STAMP

LICENSED PROFESSIONAL ENGINEER No. 178893 DONALD K. BRADSHAW STATE OF UTAH

ARCHITECT-ENGINEER STAMP

Unified State Laboratory Module 2

4451 South 2700 West, Taylorsville, UT 84118

DFCM #:	13020300
Project #:	B13-024

DATE:	ISSUE TYPE:
April 21, 2014	BID SET
May 8, 2015	ADD # 1

CHECKED BY	S. Muir
DRAWN BY	DL

LEVEL 2 MECHANICAL PLAN AREA B

MH102B

VOLUME 2

D:_BIM\Local Files\13245-Unified Lab Mod II\V13-Mechanical-Central_DLineback.rvt
5/7/2015 4:54:34 PM

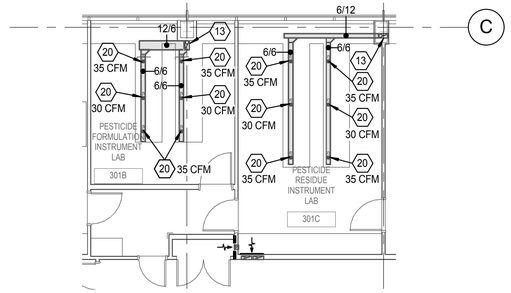

PESTICIDE LABS 301 B & C CABINET DUCT PLAN (2 / MH103A)
1/8" = 1'-0"

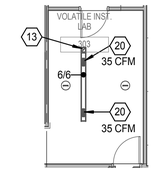

VOLATILE INST. LAB 303 DUCT PLAN (3 / MH103A)
1/8" = 1'-0"

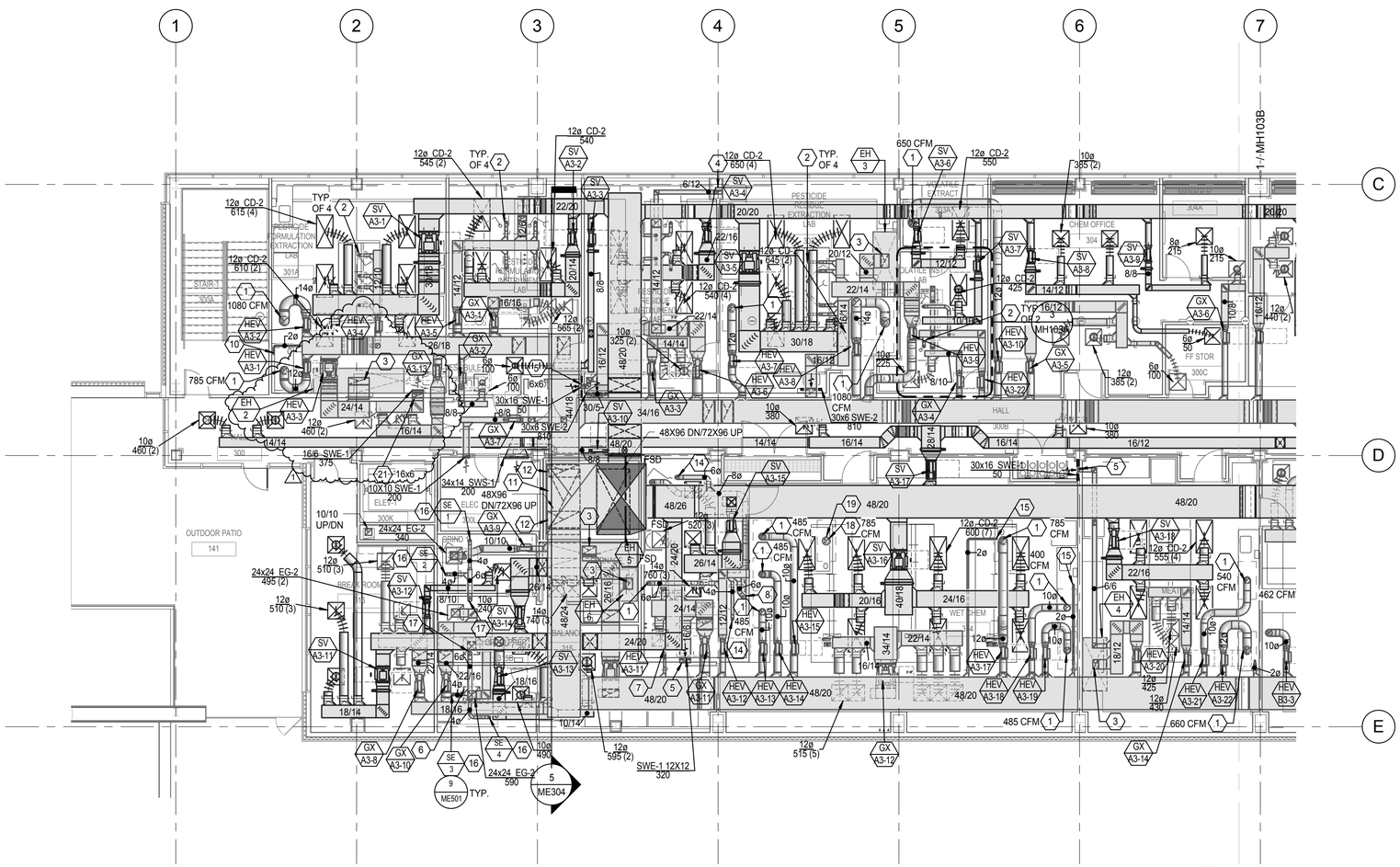

LEVEL 3 MECHANICAL PLAN AREA A (1 / MH103A)
1/8" = 1'-0"

N

KEYED NOTES CONT.

21 EXHAUST DUCT TO DROP DOWN IN 6" WALL CAVITY TO SIDEWALL EXHAUST GRILL. EXHAUST DUCT IN WALL SHALL BE OF THE SIZE NOTED. MOUNT SIDEWALL EXHAUST GRILL AT COUNTER TOP HEIGHT. COORDINATE EXACT HEIGHT WITH CASEWORK SUBMITTAL.

KEYED NOTES

1 CONNECT EXHAUST DUCT TO FUME HOOD. INSTALL SASH STOP AT 18". BALANCE TO 100 FPM FACE VELOCITY AT 18" SASH HEIGHT. EXHAUST DUCT SHALL BE WELDED 304 STAINLESS STEEL FROM HOOD CONNECTION TO MEDIUM PRESSURE MAIN. APPROXIMATE EXHAUST AIRFLOW NOTED.

2 CONNECT EXHAUST DUCT TO SNORKEL WITH 4" DIA. DUCT. BALANCE TO 100 CFM. COORDINATE ACTUAL SIZE AND EXHAUST AIRFLOW RATE WITH EQUIPMENT SUPPLIER.

3 CONNECT EXHAUST DUCT TO EXHAUST COLLAR ON CANOPY EXHAUST HOOD. BALANCE TO AIRFLOW NOTED IN EXHAUST HOOD SCHEDULE.

4 EXHAUST DUCT TO DROP DOWN IN WALL CAVITY TO SERVE THE VENTILATED BASE CABINETS. SEE 2/MH103A FOR CONTINUATION.

5 EXHAUST DUCT TO DROP DOWN IN 6" WALL CAVITY TO LOW SIDEWALL EXHAUST. EXHAUST DROP IN WALL SHALL BE OF THE SIZE NOTED. MOUNT LOW SIDEWALL EXHAUST GRILL AT 1'-0" AFF.

6 PROVIDE AND INSTALL REPLACEMENT FILTERS IN THE EXHAUST AND SUPPLY GRILLES LOCATED IN THE GRINDING AREAS.

7 CONNECT TO EQUIPMENT EXHAUST CONNECTION WITH 2" DIA. BLACK IRON PIPING. PIPING SHALL BE CONNECTED TO EXHAUST SYSTEM AS SHOWN. PROVIDE AND INSTALL BUTTERFLY VALVE FOR AIRFLOW BALANCING.

8 CONNECT EXHAUST DUCT TO SNORKEL WITH 6" DIA. DUCT. BALANCE TO 200 CFM. COORDINATE EXACT SIZE AND EXHAUST AIRFLOW RATE WITH EQUIPMENT SUPPLIER.

9 CONNECT EXHAUST DUCT TO THIMBLE CONNECTION OF BIO SAFETY CABINET. BALANCE EXHAUST FLOW TO 105 FPM FACE VELOCITY AT 10" SASH HEIGHT. EXHAUST DUCT SHALL BE WELDED 316 STAINLESS STEEL FROM THIMBLE CONNECTION TO EXHAUST CONTROL VALVE. APPROXIMATE EXHAUST AIRFLOW NOTED.

10 CONNECT TO VENTED ACID STORAGE BASE CABINET WITH 2" DIAMETER SCHEDULE 80 PVC. PVC EXHAUST SHALL BE CONNECTED TO EXHAUST DUCT AS SHOWN. PROVIDE AND INSTALL BUTTERFLY VALVE FOR BALANCING AND BALANCE TO 25 CFM. SEE LABORATORY PLANS FOR INSTALLATION DETAILS.

11 WRAP EXHAUST DUCT IN SHAFT WITH TWO LAYERS OF 1 1/2" THICK FIRE RESISTIVE DUCT WRAP WITH A TWO HOUR RATING.

12 EXHAUST DUCT TO PENETRATE EXHAUST RISER AND RISE UP 22" IN RISER.

13 EXHAUST DUCT TO DROP DOWN IN WALL FROM ABOVE. RUN HORIZONTALLY CONCEALED WITHIN THE VENTILATED BASE CABINETS. RUN DUCTWORK AS HIGH POSSIBLE WITHIN BASE CABINET. SEE DETAIL 3/MH102B.

14 PROVIDE 6" DIA. STAINLESS STEEL FLEXIBLE HOSE EQUIPMENT CONNECTION. BALANCE TO 50 CFM. PROVIDE ESCUTCHEON AT CEILING PENETRATION. EXHAUST DUCT ABOVE THE CEILING SHALL BE HARD DUCTED.

15 CONNECT TO VENTED ACID STORAGE BASE CABINET WITH 2" DIAMETER SCHEDULE 80 PVC. PVC SHALL BE CONNECTED TO EXHAUST DUCT AS SHOWN. PROVIDE AND INSTALL BUTTERFLY VALVE FOR BALANCING AND BALANCE TO 25 CFM. SEE LABORATORY PLANS FOR INSTALLATION DETAILS.

16 CONNECT EXHAUST DUCT TO SNORKEL WITH 4" DIA. DUCT. BALANCE TO 300 CFM.

17 6" DIA. EXHAUST DUCT UP TO PENTHOUSE MECHANICAL ROOM. PROVIDE DUCT CLEANOUT AT BOTTOM OF VERTICAL RISER. SEE PENTHOUSE MECHANICAL PLAN FOR CONTINUATION.

18 CONNECT EXHAUST DUCT TO PURE ACID FUME HOOD. INSTALL SASH STOP AT 18". BALANCE TO 100 FPM FACE VELICITY AT 18" SASH HEIGHT. EXHAUST DUCT SHALL BE FIBERGLASS AND SHALL BE NON-FERROUS IN ITS ENTIRETY (INCLUDING SCREWS AND FASTENERS). APPROXIMATE EXHAUST NOTED. SEE SPECIFICATIONS FOR MORE INFROMATION.

19 PURE ACID FUME HOOD EXHAUST DUCT UP. SEE PENTHOUSE MECHANICAL PLAN FOR CONTINUATION.

20 PROVIDE AND INSTALL 4" DIAMETER HIGH EFFICIENCY TAKEOFF WITH MANUAL BALANCING DAMPER ORIENTED DOWN. BALANCE TO AIRFLOW NOTED.

KEY PLAN

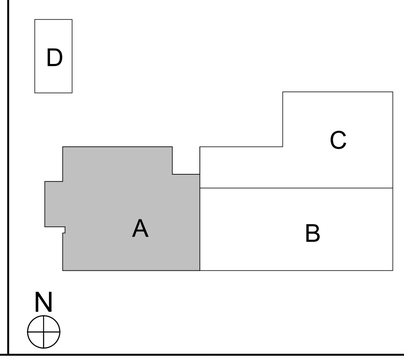

CRSA
649 E. South Temple
Salt Lake City, UT 84102
801.355.5915

MWL
11798 N. Lakeridge Pkwy.
Ashland, VA 23005
804-228-7473

State of Utah
Department of Administrative Services
Division of Facilities Construction & Management
4110 State Office Building
Salt Lake City, Utah 84114
Phone: (801) 538 - 3018
Fax: (801) 538 - 3267

DFCM APPROVAL STAMP

LICENSED PROFESSIONAL ENGINEER No. 178893 DONALD K. BRADSHAW STATE OF UTAH

ARCHITECT-ENGINEER STAMP

Unified State Laboratory Module 2

4451 South 2700 West, Taylorsville, UT 84118

DFCM #: 13020300

Project #: B13-024

DATE:	ISSUE TYPE:
April 21, 2014	BID SET
May 8, 2015	ADD # 1

CHECKED BY	S. Muir
DRAWN BY	DL

LEVEL 3 MECHANICAL PLAN AREA A

MH103A

VOLUME 2

D:_BIM\Local Files\13245-Unified Lab Mod II\V13-Mechanical-Central_DLineback.rvt
5/7/2015 4:54:42 PM

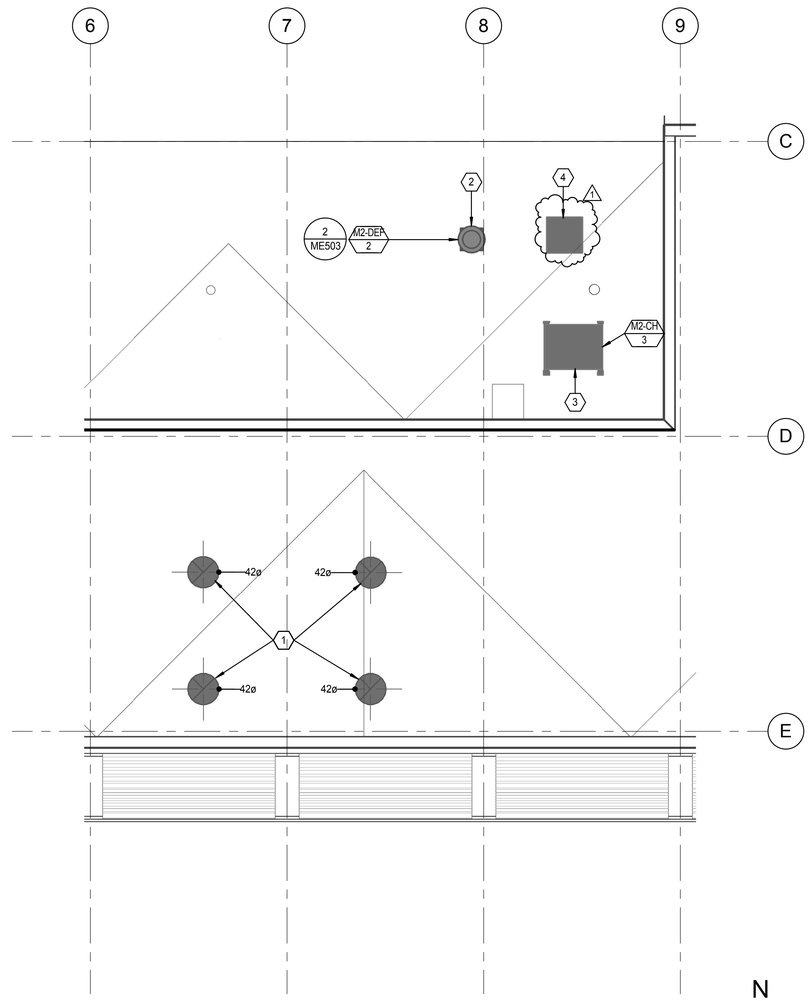

ROOF LEVEL MECHANICAL PLAN AREA B

1/8" = 1'-0" (1 / MH105B)

N

KEYED NOTES

1. EXHAUST STACK. EXTEND STACK TO 10' ABOVE ROOF LINE. STACK TO BE SUPPORTED OFF OF AIR HANDLER ROOF. CONNECT STACK TO EXHAUST FANS IN AIR HANDLER. STACK TO BE PAINTED PER COLOR DETERMINED BY ARCHITECT. PROVIDE EPOXY PAINT. SEE SPECIFICATIONS.
2. TOILET ROOM EXHAUST FAN. PROVIDE 18" HIGH CURB.
3. AIR COOLED CHILLER. PROVIDE THY-CURB MOUNTING CURBS 18" TALL UNDER CHILLER.
4. CONDENSING UNITS FOR COLD ROOMS. COORDINATE MOUNTING LOCATION WITH MECHANICAL EQUIPMENT.

KEY PLAN

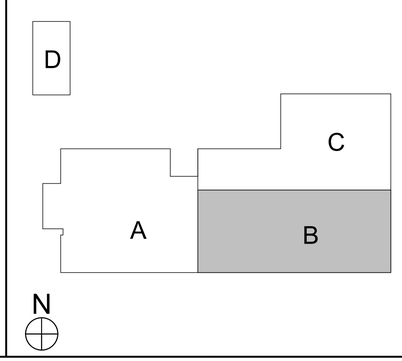

CRSA

649 E. South Temple
Salt Lake City, UT 84102
801.355.5915

MWL

11798 N. Lakeridge Pkwy.
Ashland, VA 23005
804-228-7473

State of Utah
Department of Administrative Services
Division of Facilities Construction & Management
DFCM
4110 State Office Building
Salt Lake City, Utah 84114
Phone: (801) 538 - 3018
Fax: (801) 538 - 3267

DFCM APPROVAL STAMP

LICENSED PROFESSIONAL ENGINEER
No. 178893
DONALD K. BRADSHAW
STATE OF UTAH

ARCHITECT-ENGINEER STAMP

Unified State Laboratory Module 2

4451 South 2700 West, Taylorsville, UT 84118

DFCM #:	13020300
Project #:	B13-024

DATE:	ISSUE TYPE:
April 21, 2014	BID SET
May 8, 2015	ADD # 1

CHECKED BY	S. Muir
DRAWN BY	DL

ROOF LEVEL MECHANICAL PLAN AREA B

MH105B

VOLUME 2

D:_BIM\Local Files\13245-Unified Lab Mod II\V13-Mechanical-Central_DL\meback.rvt
5/7/2015 4:54:44 PM

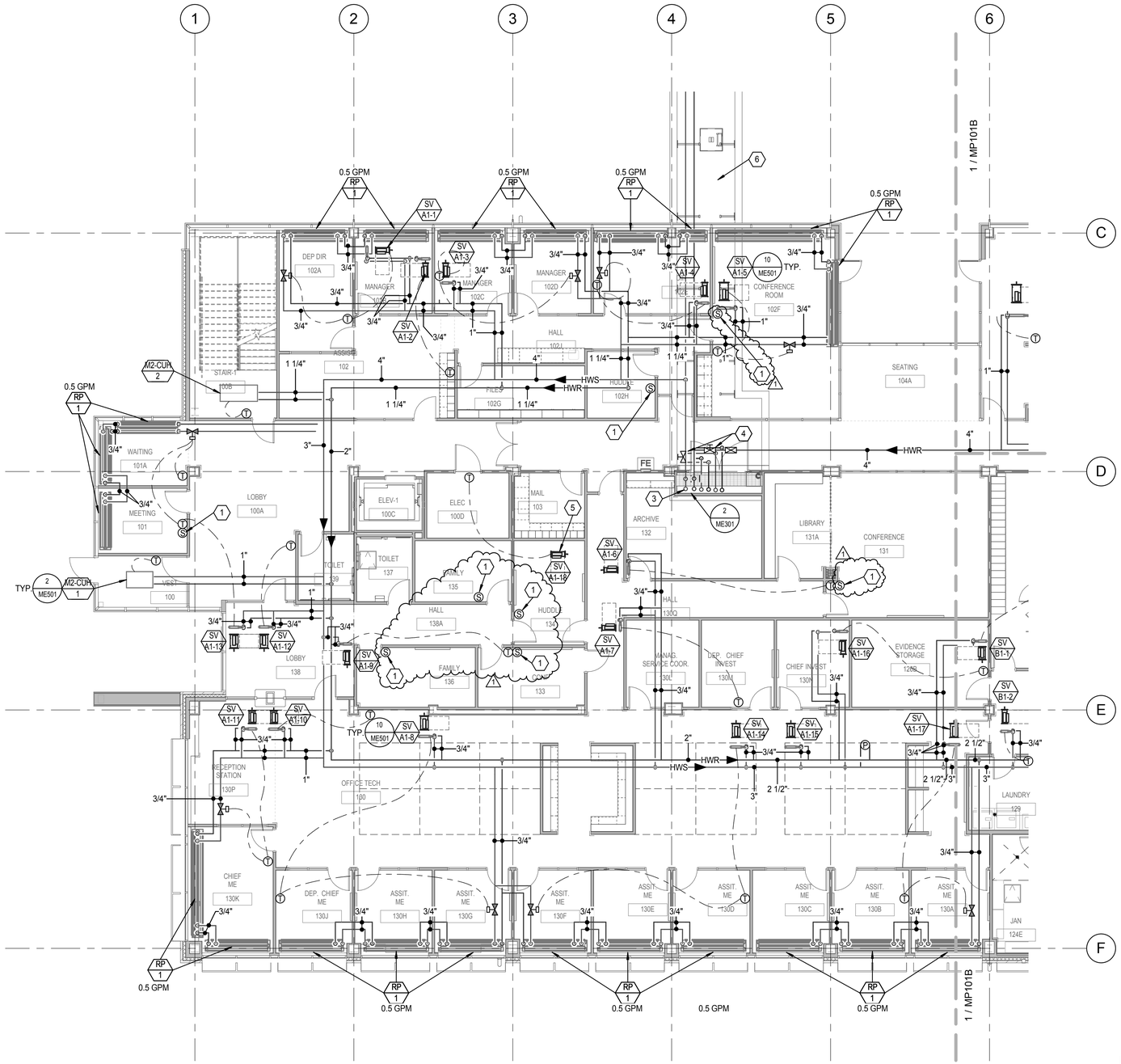

LEVEL 1 MECHANICAL PIPING PLAN AREA A

1/8" = 1'-0" (1 / MP101A)

N

KEYED NOTES

1. INSTALL CO2 SENSOR BETWEEN 3'-0" AND 6'-0" AFF.
2. PROVIDE DIFFERENTIAL PRESSURE SENSOR TO CONTROL VARIABLE VOLUME PUMPING SYSTEM. SEE SEQUENCE OF OPERATIONS.
3. 8" HOT WATER SUPPLY AND RETURN PIPING DOWN IN SHAFT TO UNDERGROUND TUNNEL AND 8" PIPING UP IN SHAFT. SEE TUNNEL AND LEVE 2 MECHANICAL PIPING PLANS FOR CONTINUATION.
4. PROVIDE TAKE-OFF RISER IN PIPE CHASE WITH ISOLATION VALVE AND CIRCUIT SETTER INSTALLED IN AN ACCESSIBLE HEIGHT AND LOCATION. BALANCE TO SUM OF FLOWS FOR THIS LEVEL. SEE MECHANICAL SCHEDULES FOR FLOW RATES. VALVES TO BE INSTALLED IN VERTICAL TAKE-OFF, SHOWN IN HORIZONTAL PIPING FOR CLARITY. SEE PIPING SHAFT PLAN AND ISOMETRIC.
5. SUPPLY VALVE IS COOLING ONLY.
6. BELOW GRADE UTILITY TUNNEL CONTAINING HEATING HOT WATER, CHILLED WATER, CONDENSER WATER AND OTHER SERVICE PIPING FROM PHASE 1 MECHANICAL ROOM. SEE MECHANICAL SITE PLAN FOR MORE INFORMATION.

KEY PLAN

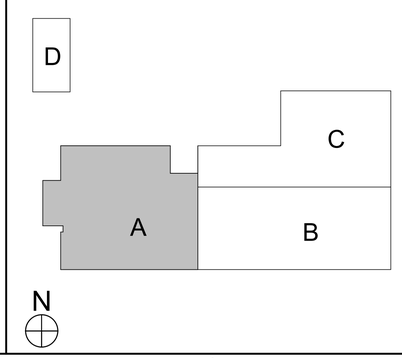

CRSA
649 E. South Temple
Salt Lake City, UT 84102
801.355.5915

MWL
11798 N. Lakeridge Pkwy.
Ashland, VA 23005
804-228-7473

State of Utah
Department of Administrative Services
Division of Facilities Construction & Management
4110 State Office Building
Salt Lake City, Utah 84114
Phone: (801) 538 - 3018
Fax: (801) 538 - 3267

DFCM APPROVAL STAMP

LICENSED PROFESSIONAL ENGINEER No. 178893 DONALD K. BRADSHAW STATE OF UTAH

ARCHITECT-ENGINEER STAMP

Unified State Laboratory Module 2

4451 South 2700 West, Taylorsville, UT 84118

DFCM #:	13020300
Project #:	B13-024

DATE:	ISSUE TYPE:
April 21, 2014	BID SET
May 8, 2015	ADD # 1

CHECKED BY	S. Muir
DRAWN BY	DL

LEVEL 1 MECHANICAL PIPING PLAN AREA A

MP101A

VOLUME 2

D:_BIM\Local Files\13245-Unified Lab Mod II-V13-Mechanical-Central_DLinebaugh.rvt
5/7/2015 4:54:48 PM

KEYED NOTES

1. PROVIDE THREE WAY VALVE.
2. WALL MOUNTED CO SENSOR TO CONTROL VENTILATION RATE AND EXHAUST AIRFLOW RATE IN SALLYPORT. INSTALL BETWEEN 3'-0" AND 6'-0" AFF. SEE SEQUENCE OF OPERATIONS.
3. PROVIDE AND INSTALL OCCUPANCY SENSOR TO CONTROL ROOM AIRLFOW IN OCCUPIED/UNOCCUPIED MODE. SEE SEQUENCE OF OPERATIONS.

KEY PLAN

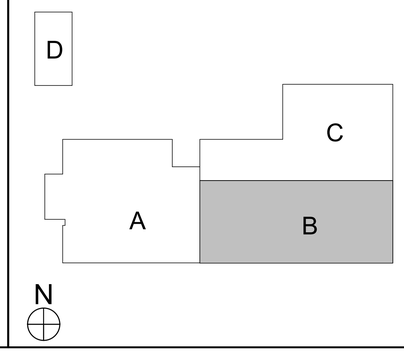

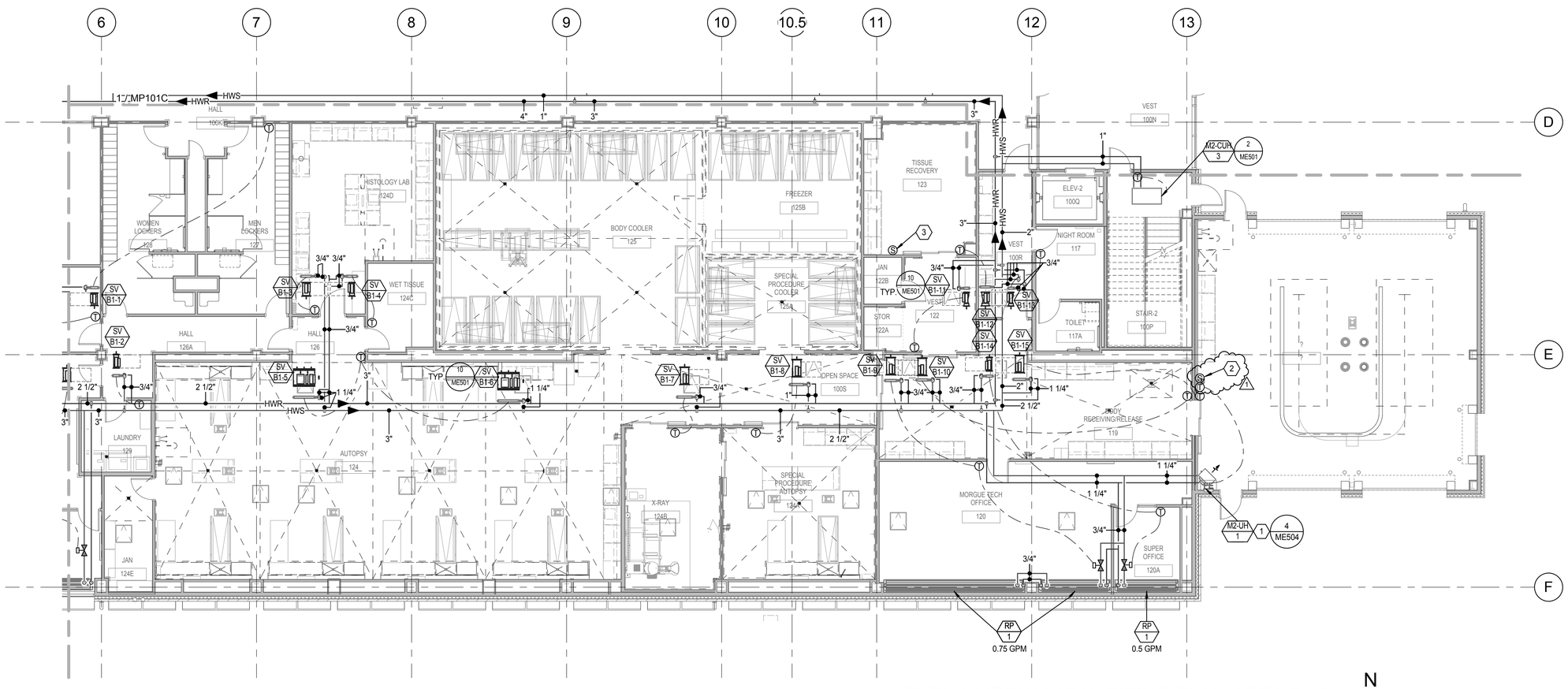

LEVEL 1 MECHANICAL PIPING PLAN AREA B (1 / MP101B)

1/8" = 1'-0"

CRSA

649 E. South Temple
Salt Lake City, UT 84102
801.355.5915

MWL

11798 N. Lakeridge Pkwy.
Ashland, VA 23005
804-228-7473

State of Utah
Department of Administrative Services

Division of Facilities Construction & Management
4110 State Office Building
Salt Lake City, Utah 84114
Phone: (801) 538 - 3018
Fax: (801) 538 - 3267

DFCM APPROVAL STAMP

LICENSED PROFESSIONAL ENGINEER
No. 178893
DONALD K. BRADSHAW
STATE OF UTAH

ARCHITECT-ENGINEER STAMP

Unified State Laboratory Module 2

4451 South 2700 West, Taylorsville, UT 84118

DFCM #:	13020300
Project #:	B13-024

DATE:	ISSUE TYPE:
April 21, 2014	BID SET
May 8, 2015	ADD # 1

CHECKED BY	S. Muir
DRAWN BY	DL

LEVEL 1 MECHANICAL PIPING PLAN AREA B

MP101B

VOLUME 2

D:_BIM\Local Files\13245-Unified Lab Mod I-V\13-Mechanical\Central_DLineback.rvt
5/7/2015 4:54:52 PM

KEYED NOTES

1. EXTEND PIPING THRU WALL CAVITY TO PLUMBING FIXTURE.
2. COMBINED MANUAL-WET STANDPIPE WITH 2 1/2" X 1 1/2" REDUCING CAPS.
3. FLOOR CONTROL VALVE ASSEMBLY SEE FIRE PROTECTION DETAILS.
4. WET FIRE SUPPRESSION PIPE TO CONTINUE TO SERVE FIRE SPRINKLER SYSTEM.
5. AREA TO HAVE FLAT PLATE CONCEALED SPRINKLERS.
6. AREA TO BE PROTECTED BY DRY PENDANT SPRINKLERS, LOCATE BRANCH-LINE IN HEATED SPACE.
7. CALIBRATED CIRCUIT SETTER BALANCING VALVE. BALANCE TO FLOW INDICATED.
8. VALVE AND CAP PIPING FOR FUTURE.

KEY PLAN

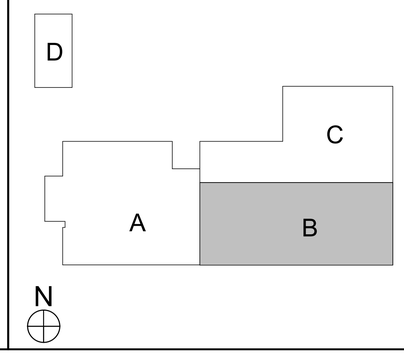

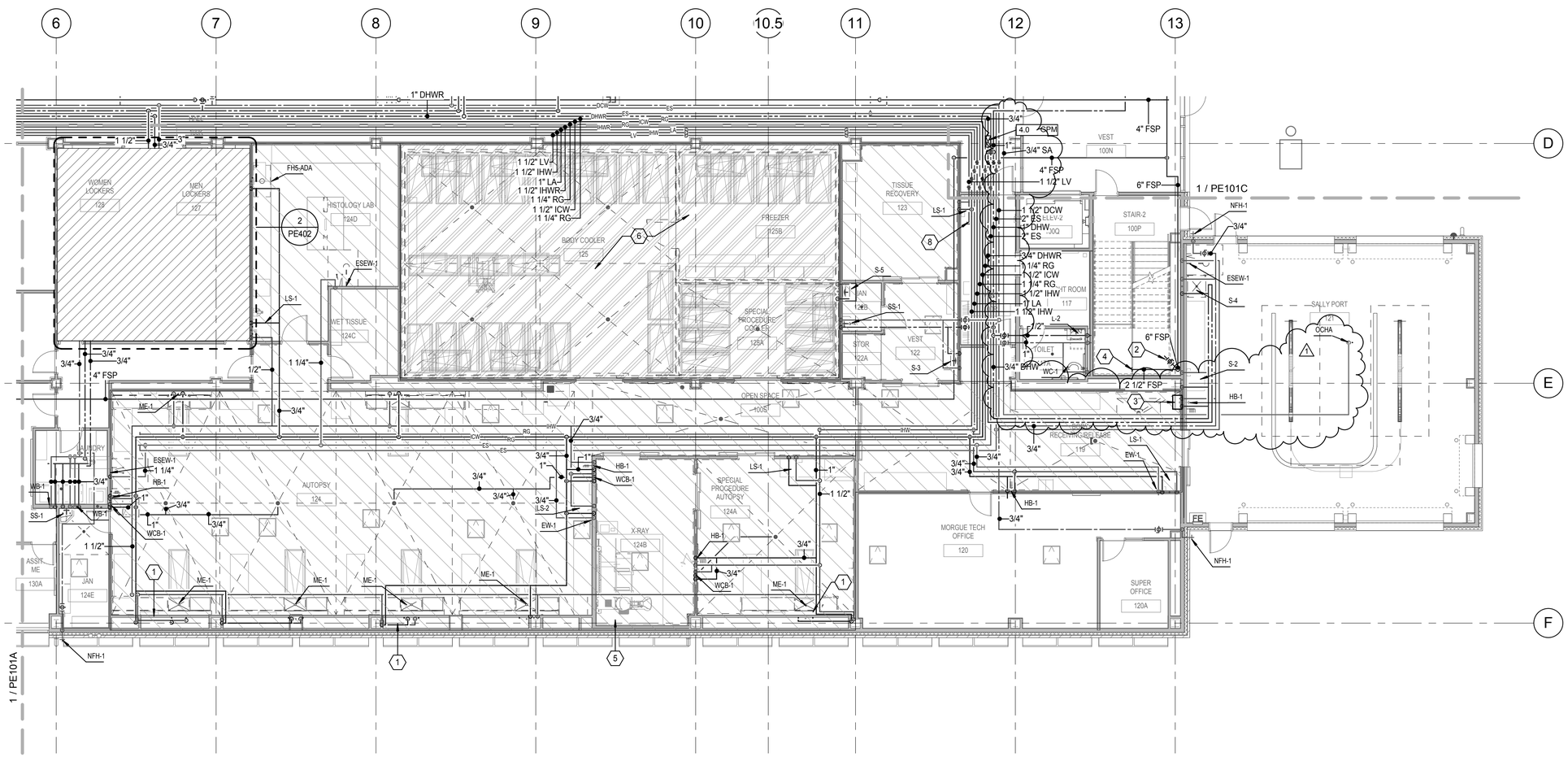

LEVEL 1 PLUMBING PLAN AREA B

1/8" = 1'-0" (1 / PE101B)

N

CRSA
649 E. South Temple
Salt Lake City, UT 84102
801.355.5915

MWL
11798 N. Lakeridge Pkwy.
Ashland, VA 23005
804-228-7473

State of Utah
Department of Administrative Services
Division of Facilities Construction & Management
4110 State Office Building
Salt Lake City, Utah 84114
Phone: (801) 538 - 3018
Fax: (801) 538 - 3267

DFCM APPROVAL STAMP

LICENSED PROFESSIONAL ENGINEER No. 178893 DONALD K. BRADSHAW STATE OF UTAH

ARCHITECT-ENGINEER STAMP

Unified State Laboratory Module 2

4451 South 2700 West, Taylorsville, UT 84118

DFCM #:	13020300
Project #:	B13-024

DATE:	ISSUE TYPE:
April 21, 2014	BID SET
May 8, 2015	ADD # 1

CHECKED BY	J. Maeser
DRAWN BY	DL

LEVEL 1 PLUMBING PLAN AREA B

PE101B

VOLUME 2

D:_BIM\Local Files\13245-Unified Lab Mod III\13-Mechanical-Central_DL.rvt
5/7/2015 4:54:57 PM

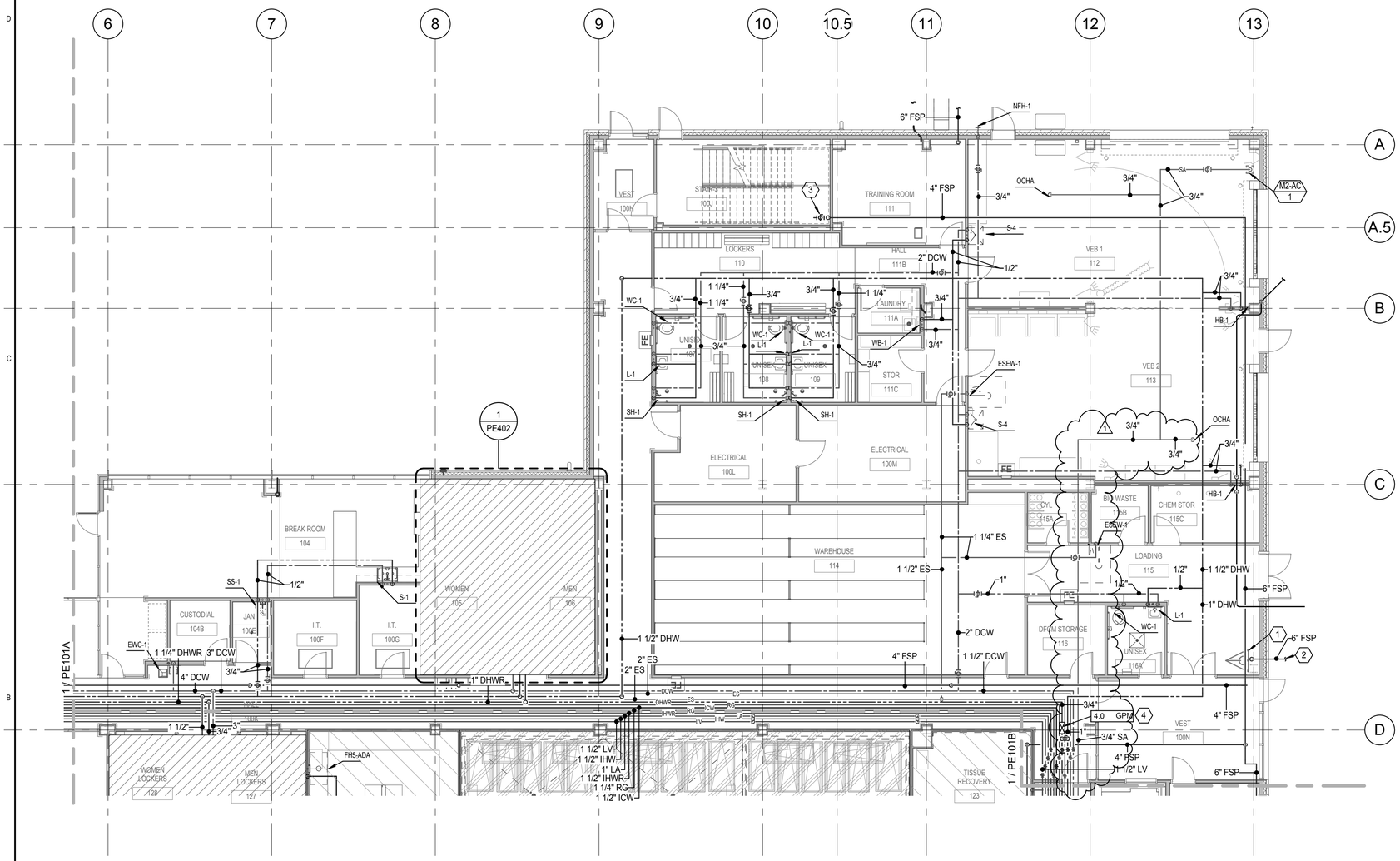

LEVEL 1 PLUMBING PLAN AREA C

1/8" = 1'-0" (1 / PE101C)

N

KEYED NOTES

1. FIRE RISER, SEE DETAIL.
2. SEE CIVIL PLANS FOR CONTINUATION.
3. CLASS 1 MANUAL WET STANDPIPE WITH 2 1/2" X 1 1/2" REDUCING CAPS.
4. CALIBRATED CIRCUIT SETTER BALANCING VALVE. BALANCE TO FLOW INDICATED.

KEY PLAN

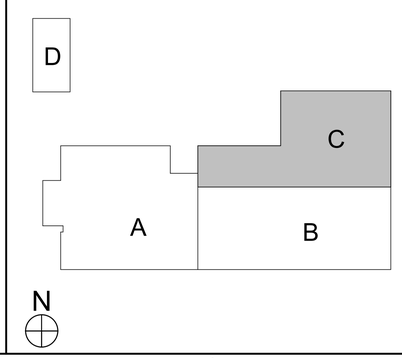

CRSA
649 E. South Temple
Salt Lake City, UT 84102
801.355.5915

MWL
11798 N. Lakeridge Pkwy.
Ashland, VA 23005
804-228-7473

State of Utah
Department of Administrative Services
Division of Facilities Construction & Management
4110 State Office Building
Salt Lake City, Utah 84114
Phone: (801) 538 - 3018
Fax: (801) 538 - 3267

DFCM APPROVAL STAMP

LICENSED PROFESSIONAL ENGINEER No. 178893 DONALD K. BRADSHAW STATE OF UTAH

ARCHITECT-ENGINEER STAMP

Unified State Laboratory Module 2

4451 South 2700 West, Taylorsville, UT 84118

DFCM #: 13020300

Project #: B13-024

DATE:	ISSUE TYPE:
April 21, 2014	BID SET
May 8, 2015	ADD # 1

CHECKED BY	J. Maeser
DRAWN BY	DL

LEVEL 1 PLUMBING PLAN AREA C

PE101C

VOLUME 2

D:_BIM\Local Files\13245-Unified Lab Mod II-V13-Mechanical-Central_DLineback.rvt
5/7/2015 4:54:59 PM

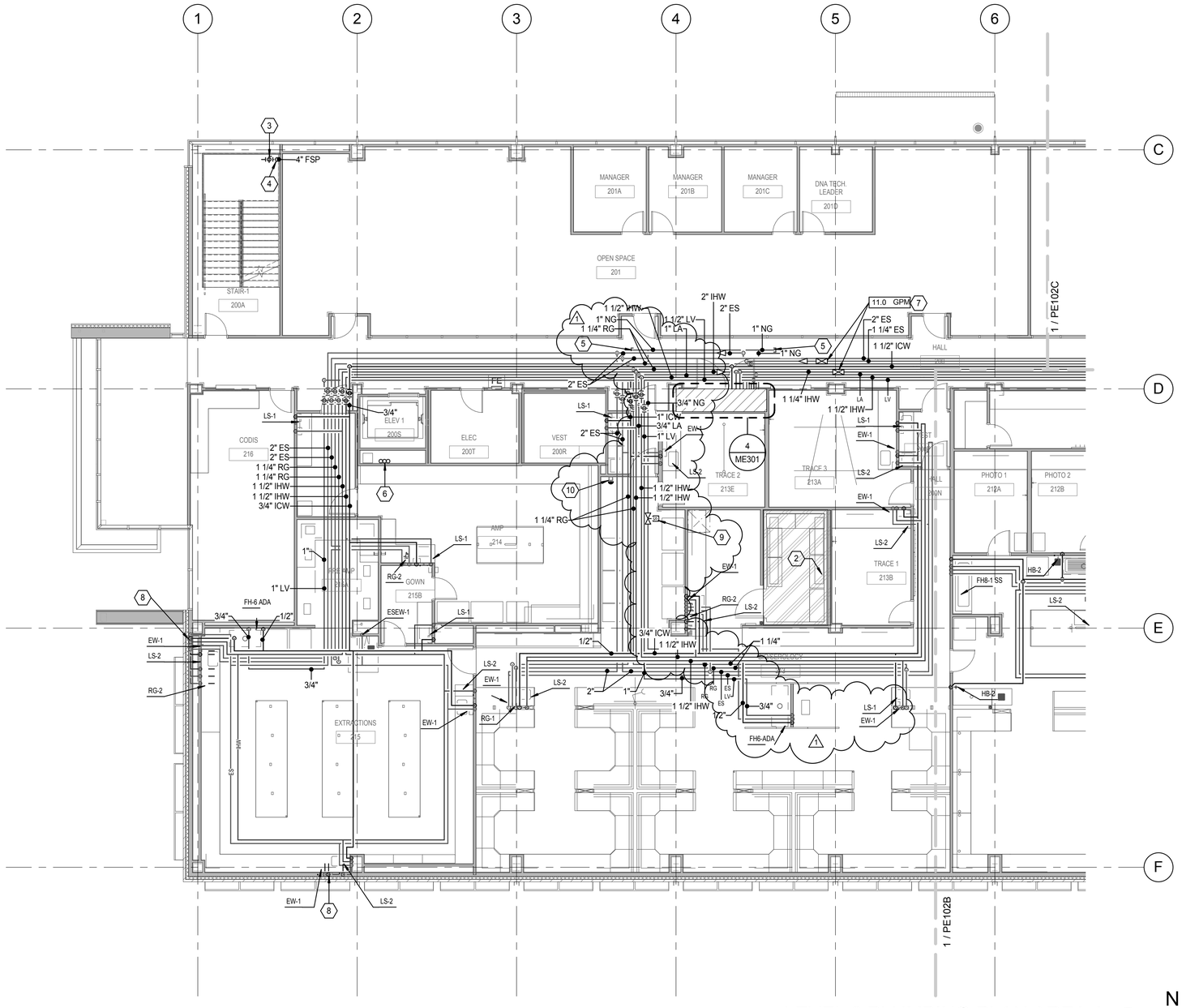

LEVEL 2 PLUMBING PLAN AREA A

1/8" = 1'-0" (1 / PE102A)

N

KEYED NOTES

1. FROM UMBILICAL CHASE EXTEND 3/4" RG, 3/4" IHW AND 3/4" ICW THRU CABINETRY TO GLASS WASHER. PROVIDE VALVE WITH 3/4" HOSE THREAD OUTLET FOR EACH UTILITY.
2. AREA TO BE PROTECTED BY DRY PENDANT SPRINKLERS, LOCATE BRANCH-LINE IN HEATED SPACE.
3. CLASS 1 MANUAL WET STANDPIPE WITH 2 1/2" X 1 1/2" REDUCING CAPS.
4. FSP TO RISE TO HOSE VALVE ON ROOF, INCLUDE SHUTOFF VALVE IN HEATED SPACE ACCESSIBLE FROM ROOF. LOCATE ALL VALVES AN OUTLETS A MINIMUM OF 10-FEET AWAY FROM EDGE OF ROOF.
5. VALVE AND CAP PIPING FOR FUTURE.
6. 1-1/4" DHW (TWO LINES), 3/4" DCW UP/DN.
7. CALIBRATED CIRCUIT SETTER BALANCING VALVE AT THE END OF IHW AND ES CIRCULATION LOOP. BALANCE TO FLOW INDICATED.
8. EXTEND PIPING TO SINK THRU WALL.
9. SOLENOID VALVE FOR NATURAL GAS EMERGENY SHUT-OFF.
10. EMERGENCY SHUT-OFF BUTTON FOR NATURAL GAS.

KEY PLAN

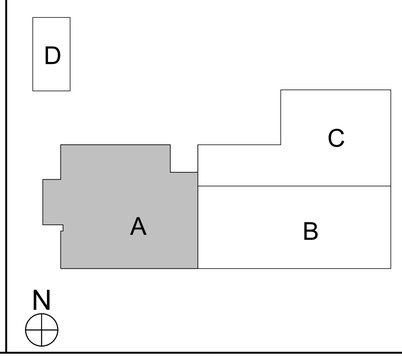

CRSA

649 E. South Temple
Salt Lake City, UT 84102
801.355.5915

MWL

11798 N. Lakeridge Pkwy.
Ashland, VA 23005
804-228-7473

State of Utah
Department of Administrative Services
Division of Facilities Construction & Management
4110 State Office Building
Salt Lake City, Utah 84114
Phone: (801) 538 - 3018
Fax: (801) 538 - 3267

DFCM APPROVAL STAMP

LICENSED PROFESSIONAL ENGINEER No. 178893 DONALD K. BRADSHAW STATE OF UTAH

ARCHITECT-ENGINEER STAMP

Unified State Laboratory Module 2

4451 South 2700 West, Taylorsville, UT 84118

DFCM #:	13020300
Project #:	B13-024

DATE:	ISSUE TYPE:
April 21, 2014	BID SET
May 8, 2015	ADD # 1

CHECKED BY	J. Maeser
DRAWN BY	DL

LEVEL 2 PLUMBING PLAN AREA A

PE102A

VOLUME 2

D:_BIM\Local Files\13245-Unified Lab Mod II-V13-Mechanical-Central_DLineback.rvt
5/7/2015 4:55:00 PM

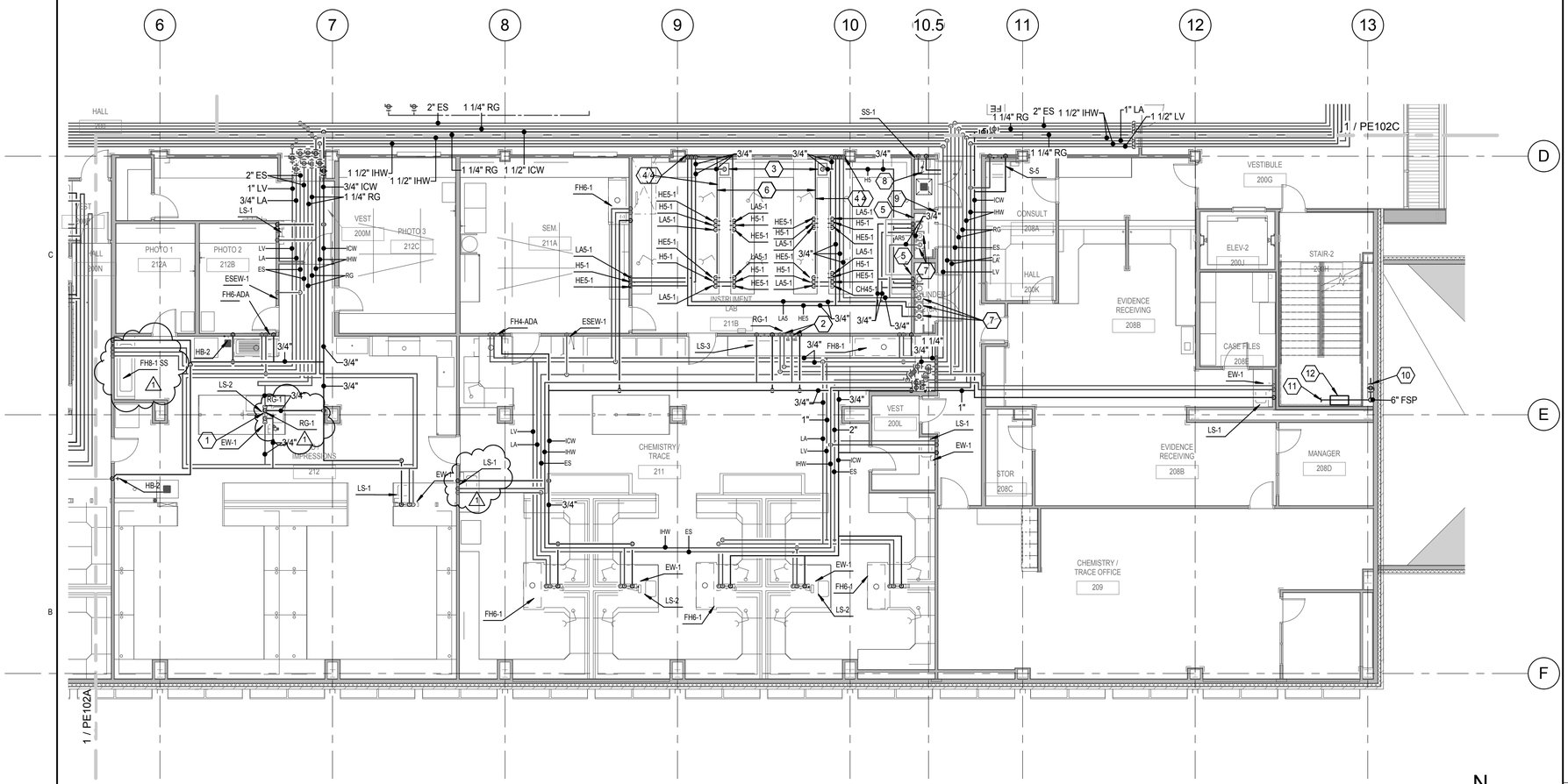

LEVEL 2 PLUMBING PLAN AREA B

1/8" = 1'-0" (1 / PE102B)

N

KEYED NOTES

1. FROM UMBILICAL CHASE EXTEND 3/4" RG, 3/4" IHW AND 3/4" ICW THRU CABINETRY TO GLASS WASHER. PROVIDE VALVE WITH 3/4" HOSE THREAD OUTLET FOR EACH UTILITY.
2. EXTEND 3/4" RG, 3/4" IHW AND 3/4" ICW TO GLASS WASHER. PROVIDE VALVE WITH 3/4" HOSE THREAD OUTLET FOR EACH UTILITY.
3. HYDROGEN GENERATOR. COORDINATE WITH LAB PLANS.
4. DROP PIPING THRU WALL, EXTEND THRU CABINETRY TO WORK BENCH RACEWAY AND OUT TO BENCH TOP OUTLETS.
5. GAS OUTLETS: AR5-1, HE5-1, H5-1, LA5-1.
6. EACH PIPE IN RACEWAY TO BE SIZED AT 3/4".
7. PROVIDE MAINFOLD AT CYLINDER.
8. LOCATE PRE-ACTION VALVE ON WALL IN JANITOR CLOSET. RISER-MOUNTED AIR COMPRESSOR.
9. LOCATE PRE-ACTION RELEASING PANEL.
10. COMBINED MANUAL-WET STANDPIPE WITH 2 1/2" X 1 1/2" REDUCING CAPS.
11. WET FIRE SUPPRESSION PIPE TO CONTINUE TO SERVE FIRE SPRINKLER SYSTEM.
12. FLOOR CONTROL VALVE ASSEMBLY SEE FIRE PROTECTION DETAILS.

KEY PLAN

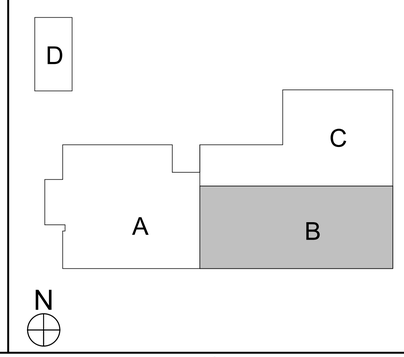

CRSA
649 E. South Temple
Salt Lake City, UT 84102
801.355.5915

MWL
11798 N. Lakeridge Pkwy.
Ashland, VA 23005
804-228-7473

State of Utah
Department of Administrative Services
Division of Facilities Construction & Management
4110 State Office Building
Salt Lake City, Utah 84114
Phone: (801) 538 - 3018
Fax: (801) 538 - 3267

DFCM APPROVAL STAMP

LICENSED PROFESSIONAL ENGINEER No. 178893 DONALD K. BRADSHAW STATE OF UTAH

ARCHITECT-ENGINEER STAMP

Unified State Laboratory Module 2

4451 South 2700 West, Taylorsville, UT 84118

DFCM #:	13020300
Project #:	B13-024

DATE:	ISSUE TYPE:
April 21, 2014	BID SET
May 8, 2015	ADD # 1

CHECKED BY	J. Maeser
DRAWN BY	DL

LEVEL 2 PLUMBING PLAN AREA B

PE102B

VOLUME 2

D:_BIM\Local Files\13245-Unified Lab Mod II\V13-Mechanical-Central_DL\reback.rvt
5/7/2015 4:55:03 PM

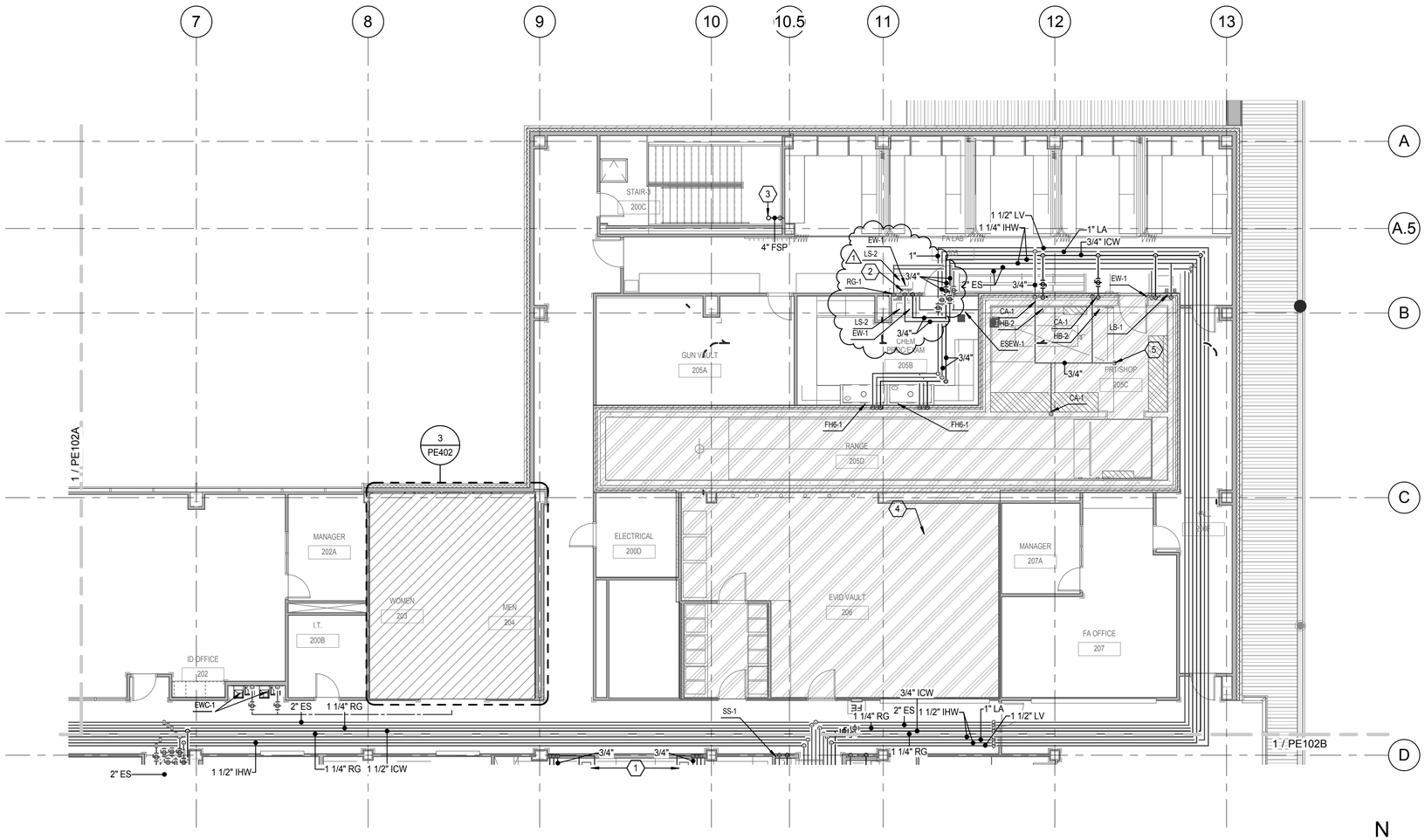

LEVEL 2 PLUMBING PLAN AREA C (1 / PE102C)

1/8" = 1'-0"

N

KEYED NOTES

1. HYDROGEN GENERATOR. COORDINATE WITH LAB PLANS.
2. SERVE BACK-TO-BACK LS-2'S WITH SAME PIPING.
3. FSP TO RISE TO HOSE VALVE ON ROOF, INCLUDE SHUTOFF VALVE IN HEATED SPACE ACCESSIBLE FROM ROOF. LOCATE ALL VALVES AN OUTLETS A MINIMUM OF 10-FEET AWAY FROM EDGE OF ROOF.
4. AREA TO BE PROTECTED BY DOUBLE-INTERLOCK PRE-ACTION SYSTEM. ONLY ONE PIPE PENETRATION IS ALLOWED INTO THE RANGE/PRT SHOP ROOM. DRY PIPING IS TO BE GALVANIZED.
5. LA CONNECTION TO OVER HEAD SERVICE CARRIER: 1/2".

KEY PLAN

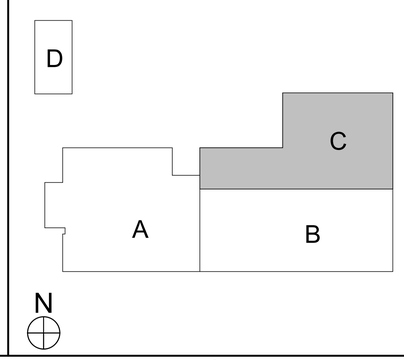

CRSA

649 E. South Temple
Salt Lake City, UT 84102
801.355.5915

MWL

11798 N. Lakeridge Pkwy.
Ashland, VA 23005
804-228-7473

State of Utah
Department of Administrative Services

Division of Facilities Construction & Management
4110 State Office Building
Salt Lake City, Utah 84114
Phone: (801) 538 - 3018
Fax: (801) 538 - 3267

DFCM APPROVAL STAMP

LICENSED PROFESSIONAL ENGINEER
No. 178893
DONALD K. BRADSHAW
STATE OF UTAH

ARCHITECT-ENGINEER STAMP

Unified State Laboratory Module 2

4451 South 2700 West, Taylorsville, UT 84118

DFCM #:	13020300
Project #:	B13-024

DATE:	ISSUE TYPE:
April 21, 2014	BID SET
May 8, 2015	ADD # 1

CHECKED BY	J. Maeser
DRAWN BY	Author

LEVEL 2 PLUMBING PLAN AREA C

PE102C

VOLUME 2

D:_BIM\Local Files\13245-Unified Lab Mod II\V13-Mechanical-Central_DLineback.rvt
5/7/2015 4:55:04 PM

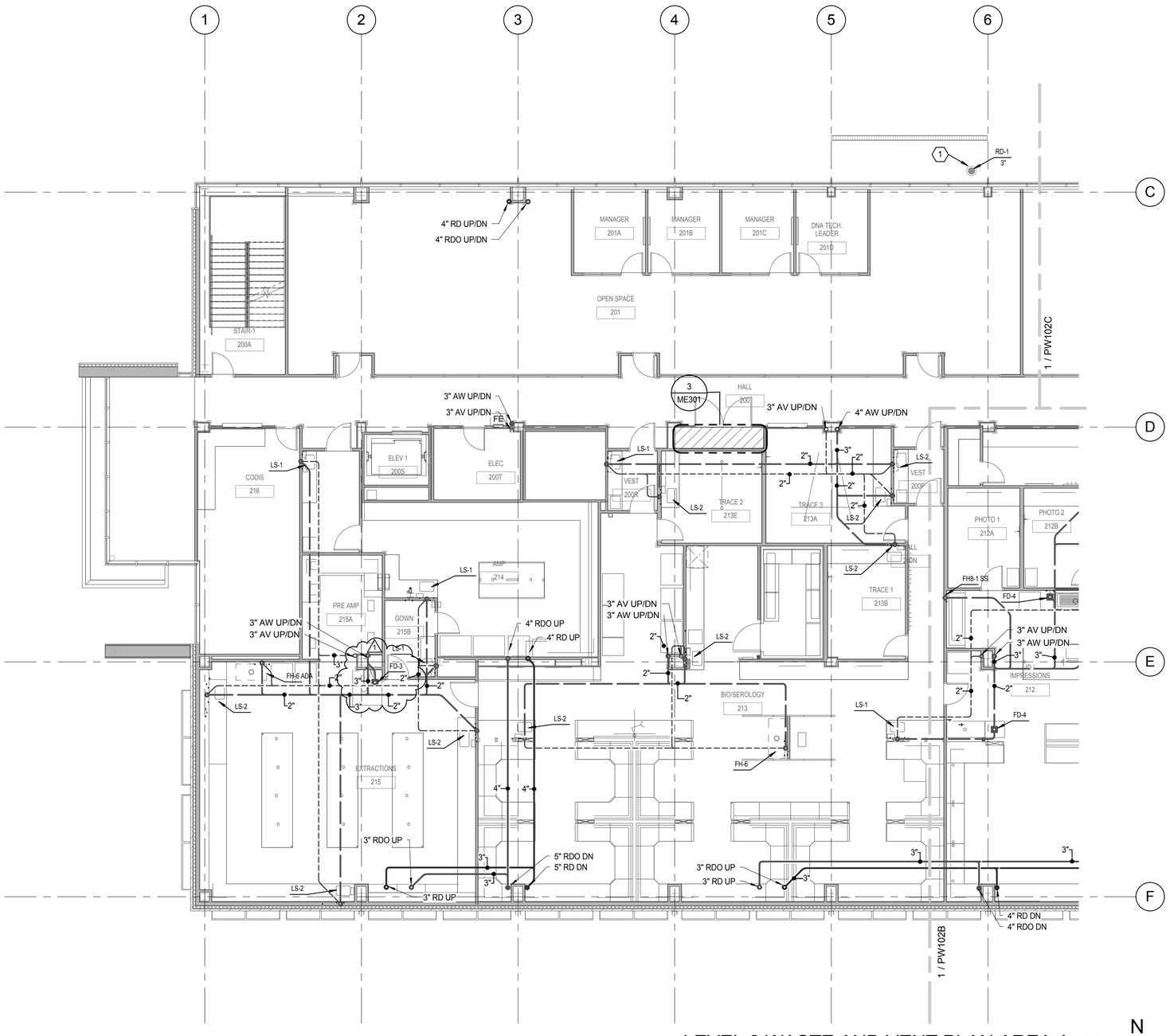

LEVEL 2 WASTE AND VENT PLAN AREA A (1 / PW102A)

1/8" = 1'-0"

N

KEYED NOTES

1 PROVIDE FREEZE PROTECTION CABLE IN EXTERIOR ROOF DRAINAGE PIPING.

KEY PLAN

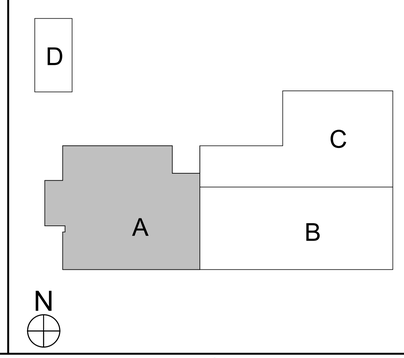

CRSA

649 E. South Temple
Salt Lake City, UT 84102
801.355.5915

MWL

11798 N. Lakeridge Pkwy.
Ashland, VA 23005
804-228-7473

State of Utah
Department of Administrative Services
Division of Facilities Construction & Management
4110 State Office Building
Salt Lake City, Utah 84114
Phone: (801) 538 - 3018
Fax: (801) 538 - 3267

DFCM APPROVAL STAMP

LICENSED PROFESSIONAL ENGINEER No. 178893 DONALD K. BRADSHAW STATE OF UTAH

ARCHITECT-ENGINEER STAMP

Unified State Laboratory Module 2

4451 South 2700 West, Taylorsville, UT 84118

DFCM #: 13020300

Project #: B13-024

DATE:	ISSUE TYPE:
April 21, 2014	BID SET
May 8, 2015	ADD # 1

CHECKED BY	Checker
DRAWN BY	DL

LEVEL 2 WASTE AND VENT PLAN AREA A

PW102A

VOLUME 2

D:_BIM\Local Files\13245-Unified Lab Mod I-V\13-Mechanical\-Central_DL\rineback.rvt
5/7/2015 4:55:07 PM

KEYED NOTES

1 CONDENSATE DRAIN FROM IT FAN COIL UNIT.

KEY PLAN

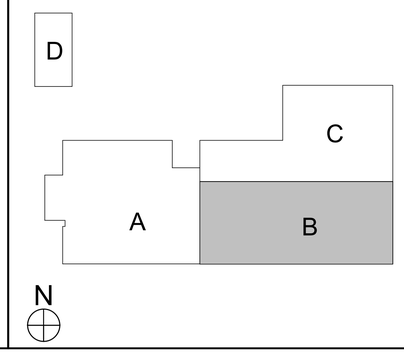

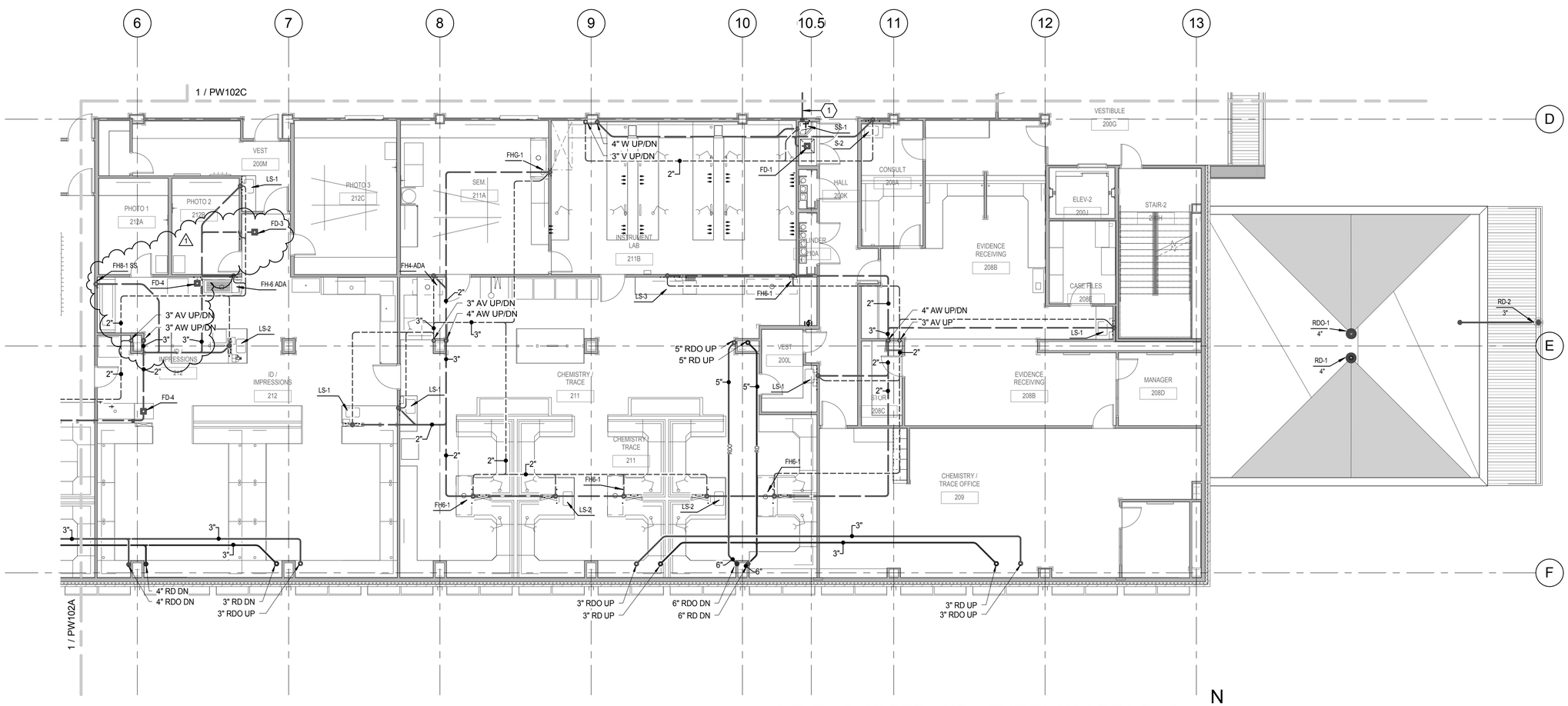

LEVEL 2 WASTE AND VENT PLAN AREA B

1/8" = 1'-0" (1 / PW102B)

N

CRSA
649 E. South Temple
Salt Lake City, UT 84102
801.355.5915

MWL
11798 N. Lakeridge Pkwy.
Ashland, VA 23005
804-228-7473

State of Utah
Department of Administrative Services

Division of Facilities Construction & Management
4110 State Office Building
Salt Lake City, Utah 84114
Phone: (801) 538 - 3018
Fax: (801) 538 - 3267

DFCM APPROVAL STAMP

LICENSED PROFESSIONAL ENGINEER No. 178893 DONALD K. BRADSHAW STATE OF UTAH

ARCHITECT-ENGINEER STAMP

Unified State Laboratory Module 2

4451 South 2700 West, Taylorsville, UT 84118

DFCM #: 13020300

Project #: B13-024

DATE:	ISSUE TYPE:
April 21, 2014	BID SET
May 8, 2015	ADD # 1

CHECKED BY	Checker
DRAWN BY	DL

LEVEL 2 WASTE AND VENT PLAN AREA B

PW102B

VOLUME 2

D:_BIM\Local Files\13245-Unified Lab Mod II-V13-Mechanical-Central_DLineback.rvt
5/7/2015 4:55:10 PM

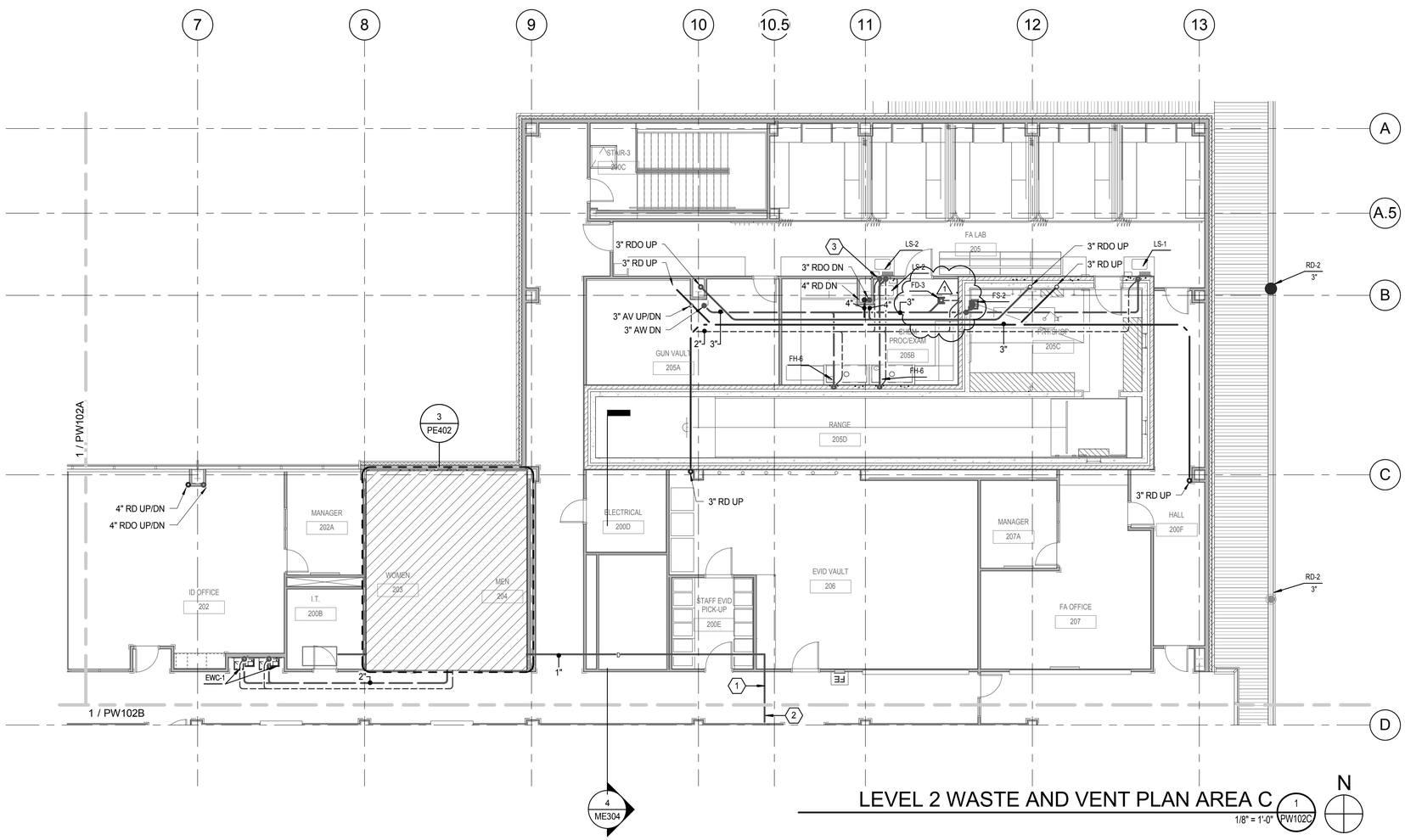

LEVEL 2 WASTE AND VENT PLAN AREA C

1/8" = 1'-0" (1 / PW102C)

N

KEYED NOTES

1 EXTEND CONDENSATE DRAIN LINE AND SLOPE TO JANITOR SINK.

2 CONDENSATE DRAIN FROM IT FAN COIL UNIT.

3 BACK TO BACK SINKS SERVED FROM THE SAME WASTE AND VENT LINES.

KEY PLAN

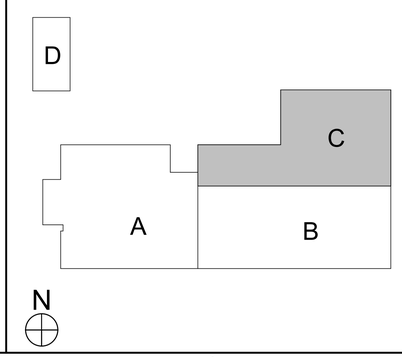

CRSA

649 E. South Temple
Salt Lake City, UT 84102
801.355.5915

MWL

11798 N. Lakeridge Pkwy.
Ashland, VA 23005
804-228-7473

State of Utah
Department of Administrative Services
Division of Facilities Construction & Management
DFCM
4110 State Office Building
Salt Lake City, Utah 84114
Phone: (801) 538 - 3018
Fax: (801) 538 - 3267

DFCM APPROVAL STAMP

LICENSED PROFESSIONAL ENGINEER
No. 178893
DONALD K. BRADSHAW
STATE OF UTAH

ARCHITECT-ENGINEER STAMP

Unified State Laboratory Module 2

4451 South 2700 West, Taylorsville, UT 84118

DFCM #:	13020300
Project #:	B13-024

DATE:	ISSUE TYPE:
April 21, 2014	BID SET
May 8, 2015	ADD # 1

CHECKED BY	Checker
DRAWN BY	DL

LEVEL 2 WASTE AND VENT PLAN AREA C

PW102C

VOLUME 2

D:_BIM\Local Files\13245-Unified Lab Mod II-V13-Mechanical-Central_DLineback.rvt
5/7/2015 4:55:11 PM

ELECTRICAL ADDENDEUM

Unified State Laboratory Module 2 May 8, 2015
Addendum #1

ELECTRICAL – DIV 26, 27, 28

SPECIFICATIONS

Section 260533 Raceways and Boxes for Electrical Systems:

1. Paragraph 2.4.B.1.b: Change the series of surface metal raceway of Mono-Systems Inc. to "**SMA**" series (designating aluminum raceway in lieu of steel raceway).

Section 260573 Overcurrent Protective Device Coordination Study:

1. The specification section is added to the specifications for this project and is attached to this addendum

Section 260923 Lighting Control Devices:

1. Para. 2.4.A and 2.4.b.3, Clarification:

   "Ceiling Mounted Switching Controls" also applies when the switching controls are fixture mounted. Lighting fixtures in the daylight controlled zones shall be wired for staged ½ level switching by the circuiting of multiple ballasts in each luminaire. Each of these ballast circuits shall be controlled by an individually programmable switching control. These switching controls shall be located within pendant luminaires (Generally Types CM-xxx"p" designations) or when used with recessed luminaires (generally Type G luminaires) they are located in the ceiling, located to respond to the workplane, and immune to an imbalanced influence by the artificial or the natural lighting in the space. These details are indicated in the description of the luminaires in the lighting fixture schedule (Sheet EL-601 and EL 602) and on the relevant lighting plans (EL Sheets).

Section 260943 Network Lighting Controls:

1. Para. 2.1.A :

   Products by Leviton have been reviewed and have been found to be acceptable for use on this project, subject to complete conformance with the requirements of the contract documents.

DRAWINGS

Sheet EE001:

1. Refer to attached revised sheet for the following:
   a. Revisions to Symbol Legend, Electrical Sheet Index, Abbreviations and Site Coordiation.

Sheet EE501:

1. Detail D2 refers to type (OL-1) flood light.

Sheets EE503 and EE504:

1. Refer to attached revised sheets for the following:
   a. Revised dimensions for the Rocky Mountain Power transformer pad and clearances.

Sheet EE601:

1. Refer to attached revised sheets for the following:
    a. TV outlet symbol clarified on Telecomm Raceway Riser Diagram.

Sheet ES101:

1. Refer to attached revised sheet for the following:
    a. Note clarifying 6" conduits for RMP service, plus the addition of a pull box for RMP 6" conduits.
    b. Addition of pole lights.

Sheet ES102:

1. Refer to attached revised sheet for the following:
    a. Addition of pole lights.
    b. New site background showing landscape and walkway features.
    c. Modification to (OL-1) fixture locations.
    d. Review to RMP transformer and meter cabinet layout.
    e. Additional information for call-in pedestal.
    f. Addition of (OC-32) wall lights in place of (HG-1) ceiling lights at southeast parking stalls.
    g. Other changes as indicated.

Sheet EP100:

1. Change quantity of conduits leading to cable tray in tunnel to (4) 4" CND in lieu of (2) 4" CND.
2. Delete General Notes #3, 4 and 5. They are not applicable to this sheet.

Sheet EP101a

1. Refer to attached revised sheet for the following:
    a. Miscellaneous clarifications, modifications and additions to devices, locations and circuits.

Sheet EP101b

1. Refer to attached revised sheet for the following:
    a. Miscellaneous clarifications, modifications and additions to devices, locations and circuits.
    b. Panel "1LB2" made to be 2-section, to match one-line.

Sheet EP101c

1. Refer to attached revised sheet for the following:
    a. Miscellaneous clarifications, modifications and additions to devices, locations and circuits.
    b. Addition of main circuit breaker/disconnects on outside of building for normal, emergency and standby service and feeders (also shown on revised one-line).
    c. Revised equipment layout in main electrical rooms 100L and 100M.

Sheet EP101d

1. Refer to attached revised sheet for the following:
    a. Miscellaneous clarifications, modifications and additions to devices, locations and circuits.
    b. Mechanical equipment and VFD modifications.
    c. Relocation of MCC's.
    d. Addition of distribution panel "1HDP-MCC" (also shown on revised one-line).

Sheet EP102a

1. Refer to attached revised sheet for the following:
    a. Miscellaneous clarifications, modifications and additions to devices, locations and circuits.

Sheet EP102b

1. Refer to attached revised sheet for the following:
    a. Miscellaneous clarifications, modifications and additions to devices, locations and circuits.
    b. Panel "2CLB3" made to be 2-section, to match one-line.

Sheet EP102d

1. This sheet has been added to the set, showing roof power requirements of central plant expansion.

Sheet EP103a

1. Refer to attached revised sheet for the following:
    a. Miscellaneous clarifications, modifications and additions to devices, locations and circuits.
    b. Panel "3LA3" made to be 2-section, to match one-line.
    c. Panel "3LA4" relocated.
    d.

Sheet EP103b

1. Refer to attached revised sheet for the following:
    a. Miscellaneous clarifications, modifications and additions to devices, locations and circuits.

Sheet EP104

1. Refer to attached revised sheet for the following:
    a. Miscellaneous clarifications, modifications and additions to devices, locations and circuits.
    b. Mechanical equipment modifications.

Sheet EP105

1. Refer to attached revised sheet for the following:
    a. Branch circuit wiring increase in size for heat trace circuits.
    b. Clarification note for connections to heat trace.

Sheet EP402

1. Refer to attached revised sheet for the following:
    a. Miscellaneous clarifications, modifications and additions to devices, locations and circuits.

Sheets EP601 – EP605, EP608, EP609:

1. Refer to attached revised sheet for the following:
    a. Various clarifications, modifications and additions to one-line diagrams.

Sheet EP610

1. Refer to attached revised sheet for the following:
    a. Various revisions to Lab Equipment Schedule.

Sheets EP611 – EP613

1. Refer to attached revised sheet for the following:
    a. Various revisions to Equipment Schedules.

Sheets EP614, EP615, EP619, EP626, EP629:

1. Refer to attached revised sheet for the following:
    a. Various revisions to Panel Schedules.

Sheets EL101a – EL103B, EL601 and EL602:

1. Clarification regarding photocell daylighting controls:

    "Ceiling Mounted Switching Controls" also applies when the switching controls are fixture mounted. Lighting fixtures in the daylight controlled zones shall be wired for staged ½ level switching by the circuiting of multiple ballasts in each luminaire. Each of these ballast circuits shall be controlled by an individually programmable switching control. These switching controls shall be located within pendant luminaires (Generally Types CM-xxx"p" designations) or when used with recessed luminaires (generally Type G luminaires) they are located in the ceiling, located to respond to the workplane, and immune to an imbalanced influence by the artificial or the natural lighting in the space. These details are indicated in the description of the luminaires in the lighting fixture schedule (Sheet EL-601 and EL 602) and on the relevant lighting plans (EL Sheets).

Sheet EL101d:

1. Refer to attached revised sheet for the following:
    a. Addition of (OC-32) wall lights at central plant expansion.

Sheets EY101a, EY101b, EY101c, EY102b:

1. Refer to attached revised sheet for the following:
    a. Various revisions to security system.

Sheet EY501:

2. Refer to attached revised sheet for the following:
    a. Revision to Card Access Door Type Schedule items.

Sheet EJ101a:

1. Refer to attached revised sheet for the following:
    a. Previous Keynote #2 regarding monitor mounting height removed and Keynote #4 regarding monitor mount added
    b. Keynote numbering adjusted.
    c. Keynote #4 added to lobby monitor
    d. Monitor moved to north wall in Huddle room 134.

Sheet EJ101b:

1. Refer to attached revised sheet for the following:
    a. Keynote #1 modified; Keynote #3 regarding monitor height added.
    b. Keynote #3 added at Night Room 117 monitor.

Sheet EJ102a:

1. Refer to attached revised sheet for the following:
    a. Size of touch monitors in hallway changed to 48”.

Sheet EJ102b:

1. Refer to attached revised sheet for the following:
    a. Size of touch monitors in hallway changed to 48”.
    b. Monitor near intersection of gridlines D and 11 removed.

Sheet EJ103b:

1. Refer to attached revised sheet for the following:
    a. Keynote #3 regarding CP2 added.
    b. TV drop, PTAV and CP2 added in Conference Rooms 306 and 310B.

Sheet EJ301:

1. Refer to attached revised sheet for the following:
    a. Height of monitor back boxes changed to 5’-6” to center of box in several locations.
    b. Size of monitors changed to 46” in several locations.

Sheet EJ302:

1. Refer to attached revised sheet for the following:
    a. Height of monitor back boxes changed to 5’-6” to center of box in several locations.
    b. Size of monitors changed to 46” in several locations.
    c. The screen height and amount of black drop on the projection screens was adjusted.
    d. Detail C5 (Huddle 134) detail modified to reflect TV wall change.

Sheet EJ501:

1. Refer to attached revised sheet for the following:
    a. On Detail A4, division of labor for projector mount noted.

Sheet EJ601:

1. Refer to attached revised sheet for the following:
    a. Changes made to Display Device Schedule
    b. Manufacturer of intercom pedestal changed from “EPS” to “Engineered Parking Systems”
    c. Monitor back boxes model changed to 526FCW

Sheet EJ602:

1. Refer to attached revised sheet for the following:
    a. Minor changes made to conduit riser diagrams

Sheet EK501:

1. Refer to attached revised sheet for the following:
    a. Minor revisions in detail callout notes.

Sheet FA101A:

1. Removed ceiling mounted speaker/strobe at gridlines D & 4.

Sheet FA101B:

1. Added Keynote #4 to provide low frequency sounder in Night Room 117.

Sheet FA102B:

1. Added FTR to IT 200B.
2. Added control module at gridlines D & 11 and Keynote #7 to provide control to pre-action panel if necessary.

Sheet FA103A:

1. Added duct smoke detector, control module, and relay at gridlines D & 4 to match mechanical plans.

Sheet FA103B:

1. Added FTR to IT 300D.

Sheet FA104:

1. Added FTR and FPS at gridlines C.6 & 13.
2. Added floor control assembly monitoring points to Stair 2.
3. Added elevator interface equipment at top of Elev. 2 shaft.

Sheet FA601:

1. Added control module and interconnection for pre-action panel/fire alarm panel interface to Fire Alarm Riser detail A1.

Sheet TA001:

1. Refer to attached revised sheet for the following:
    a. Changes made to Display Device Schedule
    b. Note 16, small typographical error fixed.

Sheet TA002:

1. Refer to attached revised sheet for the following:
    a. Symbol for PoE injector changed to “PoEI”
    b. Model numbers for “DPS”, “FBAV”, “PTAV” changed.
    c. Changes made to all monitors, including model numbers and mounting.

Sheet TA501:

1. Refer to attached revised sheet for the following:
    a. Changes made to riser diagram details B1 and C1

Sheet TA601:

1. Refer to attached revised sheet for the following:
    a. Symbol for projector changed to match floor plans
    b. Drawer added in equipment racks.

END OF ELECTRICAL ADDENDUM

Attachments:

Section 260573 Overcurrent Protective Device Coordination Study – (5 pages)

Full-Size Drawing Sheets – (63 pages)

SECTION 260573 - OVERCURRENT PROTECTIVE DEVICE COORDINATION STUDY

PART 1 - GENERAL

1.1 RELATED DOCUMENTS

A. Drawings and general provisions of the Contract, including General and Supplementary Conditions and Division 01 Specification Sections, apply to this Section.

1.2 SUMMARY

A. This Section includes computer-based, fault-current, arc flash and overcurrent protective device coordination studies. Protective devices shall be set based on results of the protective device coordination study.

B. Related Sections include the following:
   1. Division 16 Section "Commissioning for Electrical"

1.3 SUBMITTALS

A. Product Data: For computer software program to be used for studies.

B. Product Certificates: For coordination-study and fault-current-study computer software programs, certifying compliance with IEEE 399.

C. Qualification Data: For coordination-study specialist.

D. Other Action Submittals: The following submittals shall be made after the approval process for system protective devices has been completed. Submittals shall be in digital form.
   1. Coordination-study input data, including completed computer program input data sheets.
   2. Study and Equipment Evaluation Reports.
   3. Coordination-Study Report.

1.4 QUALITY ASSURANCE

A. Studies shall use computer programs that are distributed nationally and are in wide use. Software algorithms shall comply with requirements of standards and guides specified in this Section. Manual calculations are not acceptable.

B. Coordination-Study Specialist Qualifications: An entity experienced in the application of computer software used for studies, having performed successful studies of similar magnitude on electrical distribution systems using similar devices.
   1. Professional engineer, licensed in the state where Project is located, shall be responsible for the study. All elements of the study shall be performed under the direct supervision and control of engineer.

C. Comply with IEEE 242 for short-circuit currents and coordination time intervals.

D. Comply with IEEE 399 for general study procedures.

PART 2 - PRODUCTS

2.1 COMPUTER SOFTWARE DEVELOPERS

A. Basis-of-Design Product: Subject to compliance with requirements, provide the following, or a comparable product:
   1. SKM Systems Analysis, Inc.

2.2 COMPUTER SOFTWARE PROGRAM REQUIREMENTS

A. Comply with IEEE 399.

B. Analytical features of fault-current-study computer software program shall include "mandatory," "very desirable," and "desirable" features as listed in IEEE 399.

C. Computer software program shall be capable of plotting and diagramming time-current-characteristic curves as part of its output. Computer software program shall report device settings and ratings of all overcurrent protective devices and shall demonstrate selective coordination by computer-generated, time-current coordination plots.
   1. Optional Features:
      a. Arcing faults.
      b. Simultaneous faults.
      c. Explicit negative sequence.
      d. Mutual coupling in zero sequence.

PART 3 - EXECUTION

3.1 GENERAL

A. Complete the overcurrent protective device coordination study prior to shipment of the electrical distribution gear.

3.2 EXAMINATION

A. Examine Project overcurrent protective device submittals for compliance with electrical distribution system coordination requirements and other conditions affecting performance.
   1. Proceed with coordination study only after relevant equipment submittals have been assembled. Overcurrent protective devices that have not been submitted and approved prior to coordination study may not be used in study.

B. Devices to be Coordinated:
   1. Low Voltage System: Beginning with the utility transformer, all overcurrent devices on the secondary side of the distribution system.

3.3 POWEPR SYSTEM DATA

A. Gather and tabulate the following input data to support coordination study:
   1. Product Data for overcurrent protective devices specified in other Division 26 Sections and involved in overcurrent protective device coordination studies. Use equipment designation tags that are consistent with electrical distribution system diagrams, overcurrent protective device submittals, input and output data, and recommended device settings.
   2. Impedance of utility service entrance.
   3. Electrical Distribution System Diagram: In hard-copy and electronic-copy formats, showing the following:

a. Circuit-breaker and fuse-current ratings and types.
b. Relays and associated power and current transformer ratings and ratios.
c. Transformer kilovolt amperes, primary and secondary voltages, connection type, impedance, and X/R ratios.
d. Generator kilovolt amperes, size, voltage, and source impedance.
e. Cables: Indicate conduit material, sizes of conductors, conductor material, insulation, and length.
f. Busway ampacity and impedance.
g. Motor horsepower and code letter designation according to NEMA MG 1.

4. Data sheets to supplement electrical distribution system diagram, cross-referenced with tag numbers on diagram, showing the following:
   a. Special load considerations, including starting inrush currents and frequent starting and stopping.
   b. Transformer characteristics, including primary protective device, magnetic inrush current, and overload capability.
   c. Motor full-load current, locked rotor current, service factor, starting time, type of start, and thermal-damage curve.
   d. Generator thermal-damage curve.
   e. Ratings, types, and settings of utility company's overcurrent protective devices.
   f. Special overcurrent protective device settings or types stipulated by utility company.
   g. Time-current-characteristic curves of devices indicated to be coordinated.
   h. Manufacturer, frame size, interrupting rating in amperes rms symmetrical, ampere or current sensor rating, long-time adjustment range, short-time adjustment range, and instantaneous adjustment range for circuit breakers.
   i. Manufacturer and type, ampere-tap adjustment range, time-delay adjustment range, instantaneous attachment adjustment range, and current transformer ratio for overcurrent relays.
   j. Panelboards, switchboards, motor-control center ampacity, and interrupting rating in amperes rms symmetrical.

3.4 FAULT-CURRENT STUDY

A. Calculate the maximum available short-circuit current in amperes rms symmetrical at circuit-breaker positions of the electrical power distribution system. The calculation shall be for a current immediately after initiation and for a three-phase bolted short circuit at each of the following:
   1. Switchgear and switchboard bus.
   2. Distribution panelboards.
   3. Branch panelboads.
   4. Motor control centers.
   5. Disconnect switches.
   6. Automatic transfer switches.

B. Study electrical distribution system from normal and alternate power sources throughout electrical distribution system for Project. Include studies of system-switching configurations and alternate operations that could result in maximum fault conditions.

C. Calculate momentary and interrupting duties on the basis of maximum available fault current.

D. Calculations to verify interrupting ratings of overcurrent protective devices shall comply with IEEE 241 and IEEE 242.
   1. Transformers:
      a. ANSI C57.12.10.
      b. ANSI C57.12.22.
      c. ANSI C57.12.40.

d. IEEE C57.12.00.
e. IEEE C57.96.
2. Medium-Voltage Circuit Breakers: IEEE C37.010.
3. Low-Voltage Circuit Breakers: IEEE 1015 and IEEE C37.20.1.
4. Low-Voltage Fuses: IEEE C37.46.

E. Study Report:
1. Show calculated X/R ratios and equipment interrupting rating (1/2-cycle) fault currents on electrical distribution system diagram.
2. Show interrupting (5-cycle) and time-delayed currents (6 cycles and above) on medium-voltage breakers as needed to set relays and assess the sensitivity of overcurrent relays.

F. Equipment Evaluation Report:
1. For 600-V overcurrent protective devices, ensure that interrupting ratings are equal to or higher than calculated 1/2-cycle symmetrical fault current.
2. For devices and equipment rated for asymmetrical fault current, apply multiplication factors listed in the standards to 1/2-cycle symmetrical fault current.
3. Verify adequacy of phase conductors at maximum three-phase bolted fault currents; verify adequacy of equipment grounding conductors and grounding electrode conductors at maximum ground-fault currents. Ensure that short-circuit withstand ratings are equal to or higher than calculated 1/2-cycle symmetrical fault current.

3.5 COORDINATION STUDY

A. Perform coordination study using approved computer software program. Prepare a written report using results of fault-current study. Comply with IEEE 399.
1. Calculate the maximum and minimum 1/2-cycle short-circuit currents.
2. Calculate the maximum and minimum interrupting duty (5 cycles to 2 seconds) short-circuit currents.
3. Calculate the maximum and minimum ground-fault currents.

B. Comply with IEEE 241 and IEEE 242 recommendations for fault currents and time intervals.

C. Transformer Primary Overcurrent Protective Devices:
1. Device shall not operate in response to the following:
a. Inrush current when first energized.
b. Self-cooled, full-load current or forced-air-cooled, full-load current, whichever is specified for that transformer.
c. Permissible transformer overloads according to IEEE C57.96 if required by unusual loading or emergency conditions.
2. Device settings shall protect transformers according to IEEE C57.12.00, for fault currents.

D. Motors served by voltages more than 600 V shall be protected according to IEEE 620.

E. Conductor Protection: Protect cables against damage from fault currents according to ICEA P-32-382, ICEA P-45-482, and conductor melting curves in IEEE 242. Demonstrate that equipment withstands the maximum short-circuit current for a time equivalent to the tripping time of the primary relay protection or total clearing time of the fuse. To determine temperatures that damage insulation, use curves from cable manufacturers or from listed standards indicating conductor size and short-circuit current.

F. Coordination-Study Report: Prepare a written report indicating the following results of coordination study:
1. Tabular Format of Settings Selected for Overcurrent Protective Devices:
a. Device tag.

b. Relay-current transformer ratios; and tap, time-dial, and instantaneous-pickup values.
c. Circuit-breaker sensor rating; and long-time, short-time, and instantaneous settings.
d. Fuse-current rating and type.
e. Ground-fault relay-pickup and time-delay settings.

2. Coordination Curves: Prepared to determine settings of overcurrent protective devices to achieve selective coordination. Graphically illustrate that adequate time separation exists between devices installed in series, including power utility company's upstream devices. Prepare separate sets of curves for the switching schemes and for emergency periods where the power source is local generation. Show the following information:
   a. Device tag.
   b. Voltage and current ratio for curves.
   c. Three-phase and single-phase damage points for each transformer.
   d. No damage, melting, and clearing curves for fuses.
   e. Cable damage curves.
   f. Transformer inrush points.
   g. Maximum fault-current cutoff point.

G. Completed data sheets for setting of overcurrent protective devices.

H. Set adjustable devices prior to energizing equipment.

3.6 ARC FLASH STUDY

A. Perform arc flash study using approved computer software program. Prepare a written report using results of the study. Comply with NFPA 70E.
   1. Provide and apply arc flash labels for each and every item of distribution equipment included in the study.

END OF SECTION 260573

SYMBOLS LEGEND

SYMBOL	DESCRIPTION
REFERENCE AND LINE SYMBOLS	
A5 / E-501	DETAIL INDICATOR: A5 INDICATES DETAIL NUMBER, E-501 INDICATES DRAWING SHEET WHERE DETAIL IS SHOWN.
A5 / E-201	ELEVATION OR SECTION INDICATOR, EXTERIOR: A5 INDICATES ELEVATION OR SECTION NUMBER, E-201 INDICATES DRAWING SHEET WHERE ELEVATION OR SECTION IS SHOWN.
A5 / E-201	ELEVATION OR SECTION INDICATOR, INTERIOR: A5 INDICATES ELEVATION OR SECTION NUMBER, E-201 INDICATES DRAWING SHEET WHERE ELEVATION OR SECTION IS SHOWN.
ROOM NAME 100	ROOM IDENTIFIER WITH ROOM NAME AND NUMBER.
1	KEYNOTE INDICATOR.
1	REVISION INDICATOR.
CU-1	EQUIPMENT INDICATOR.
X-X / XMDP	MECHANICAL EQUIPMENT INDICATOR. "X-X" INDICATES EQUIPMENT MARK SHOWN ON EQUIPMENT SCHEDULE. "XMDP" IDENTIFIES PANEL EQUIPMENT IS CIRCUITED TO. PROVIDE CONDUIT AND WIRING AND ALL OTHER EQUIPMENT PER EQUIPMENT SCHEDULE.
X-X / XLB	LAB EQUIPMENT INDICATOR. "X-X" INDICATES EQUIPMENT MARK SHOWN ON EQUIPMENT SCHEDULE. "XLB" IDENTIFIES PANEL EQUIPMENT IS CIRCUITED TO. PROVIDE CONDUIT AND WIRING AND ALL OTHER EQUIPMENT PER EQUIPMENT SCHEDULE.
	BREAK, STRAIGHT: TO BREAK PARTS OF DRAWING
	BREAK, ROUND
MATCH LINE SEE XX/X-XXX	MATCH LINE INDICATOR: CENTER, EXTRA WIDE LINE.
WIRING METHODS	
	WIRING.
	WIRING TURNED UP OR TOWARDS OBSERVER.
	WIRING TURNED DOWN OR AWAY FROM OBSERVER.
A-1,3,5	BRANCH CIRCUIT HOME RUN TO PANELBOARD: NUMBER OF ARROWS INDICATES NUMBER OF CIRCUITS. LETTER AND NUMBER NOTATIONS IDENTIFY PANEL AND CIRCUIT NUMBERS. USE #12 CONDUCTORS, EXCEPT #10 CONDUCTORS SHALL BE INSTALLED IF DISTANCES EXCEED THOSE SPECIFIED IN THE ELECTRICAL SPECIFICATIONS.
1 A-1,3,5 EQ	BRANCH CIRCUIT HOME RUN TO PANELBOARD: NUMBER OF ARROWS INDICATES NUMBER OF CIRCUITS. LETTER AND NUMBER NOTATIONS IDENTIFY PANEL AND CIRCUIT NUMBERS. NUMBER IN BOX REFERS TO THE CONDUCTOR AND CONDUIT SCHEDULE. REFER TO EQUIPMENT SCHEDULE FOR CONDUIT AND WIRE SIZE.
— X —	WIRING AND/OR RACEWAY: THIN LINE. WHERE "X" = : CCTV = CLOSED CIRCUIT TELEVISION; P = POWER; S = SOUND; FA = FIRE ALARM; T = TELEPHONE; H = HEAT TRACE; I = INTERCOM; TV = TELEVISION OTHERS AS NOTED IN OTHER SCHEDULES. RACEWAYS AND WIRING SHALL BE SIZED AS SHOWN AND/OR SPECIFIED.
	~~LOW VOLTAGE WIRING, DIVIDE, MEDIUM LINE~~
	CONDUIT STUB. DIMENSION RECORD DRAWINGS AND MARK.
1	CONDUCTOR & CONDUIT ("CC") SCHEDULE INDICATOR. REFER TO ONE-LINE DIAGRAM.
1	CONDUCTOR RUN IDENTIFICATION.
	JUNCTION BOX.
SC	JUNCTION BOX, SYSTEMS FURNITURE COMMUNICATION CONNECTION.
SP	JUNCTION BOX, SYSTEMS FURNITURE POWER CONNECTION.
PB	PULL BOX.
C C	CABLE TRAY ABOVE ACCESSIBLE CEILING.
	EARTH GROUND (ONE-LINE DIAGRAM).
C	JUNCTION BOX, CEILING.
	LADDER RACK.

SYMBOLS LEGEND

SYMBOL	DESCRIPTION
WIRING DEVICES	
	RECEPTACLE, DUPLEX: NEMA 5-20R.
A	RECEPTACLE, DUPLEX, ABOVE COUNTER: NEMA 5-20R.
C	RECEPTACLE, DUPLEX, CEILING: NEMA 5-20R.
DF	RECEPTACLE, DUPLEX WITH GROUND FAULT CIRCUIT INTERRUPTER, DRINKING FOUNTAIN. CONCEAL WATER COOLER RECEPTACLE BEHIND WATER COOLER. SEE MECHANICAL/PLUMBING SHOP DRAWINGS FOR INSTALLATION REQUIREMENTS.
IG	RECEPTACLE, DUPLEX, ISOLATED GROUND: NEMA 5-20R.
W	RECEPTACLE, DUPLEX WITH GROUND FAULT CIRCUIT INTERRUPTER, WET LABEL, "WEATHERPROOF IN USE": NEMA 5-20R.
	RECEPTACLE, DUPLEX ON EMERGENCY POWER: NEMA 5-20R.
	RECEPTACLE, DUPLEX WITH GROUND FAULT CIRCUIT INTERRUPTER: NEMA 5-20R.
WP	RECEPTACLE, DUPLEX WITH GROUND FAULT CIRCUIT INTERRUPTER, WEATHERPROOF: NEMA 5-20R.
	RECEPTACLE, QUADRAPLEX: NEMA 5-20R.
	RECEPTACLE, QUADRAPLEX ON EMERGENCY POWER: NEMA 5-20R.
	RECEPTACLE, SPECIAL PURPOSE. PROVIDE RECEPTACLE TO MATCH EQUIPMENT PLUG.
	RECEPTACLE, SPECIAL PURPOSE ON EMERGENCY POWER. PROVIDE RECEPTACLE TO MATCH EQUIPMENT PLUG.
	MULTI-OUTLET SURFACE RACEWAY ASSEMBLY: OUTLETS AS INDICATED.
D	SINGLE DROP CORD ASSEMBLY WITH NEMA 5-20 QUAD. SEE SPECIFICATIONS.
D D	DOUBLE DROP CORD ASSEMBLY WITH (2) NEMA 5-20 QUAD. SEE SPECIFICATIONS.
FB#	FLUSH FLOOR BOX. "#" SHOWN ON DRAWINGS. REFER TO WIRING DEVICE SCHEDULE IN THE ELECTRICAL SPECIFICATIONS FOR CONFIGURATION AND DEVICES.
PT#	FLUSH FIRE RATED POKE THRU. "#" SHOWN ON DRAWINGS. REFER TO WIRING DEVICE SCHEDULE IN THE ELECTRICAL SPECIFICATIONS FOR CONFIGURATION AND DEVICES.
	SWITCH, DIMMER.
X $	SWITCH, SINGLE POLE ("x" INDICATES FIXTURES CONTROLLED).
X $2	SWITCH, DOUBLE POLE ("x" INDICATES FIXTURES CONTROLLED).
X $3	SWITCH, THREE-WAY ("x" INDICATES FIXTURES CONTROLLED).
X $4	SWITCH, FOUR-WAY ("x" INDICATES FIXTURES CONTROLLED).
$K	SWITCH, KEY OPERATED.
$P	SWITCH, PILOT LIGHT.
$T	SWITCH, TIMER OPERATED.
$WP	SWITCH, WEATHERPROOF.
SITE ELECTRICAL AND COMMUNICATIONS UTILITIES	
—3ØUP—	ELECTRIC LINE: THIN LINE. 1Ø = SINGLE PHASE, 2Ø = 2-PHASE, 3Ø = 3-PHASE, O = OVERHEAD, UG = UNDERGROUND, P = PRIMARY, S = SECONDARY
—O—	UTILITY POLE.
C	UTILITY, COMMUNICATIONS MANHOLE.
E	UTILITY, ELECTRICAL MANHOLE.
T	UTILITY, TELEPHONE MANHOLE.

ELECTRICAL SHEET INDEX

EE001	SHEET INDEX, ABBREVIATIONS, AND GENERAL NOTES
EE002	SYMBOLS LEGEND
EE501	DETAILS
EE502	DETAILS
EE503	DETAILS
EE504	DETAILS
EE601	TELECOMM RACEWAY RISER DIAGRAM
EE602	GROUNDING RISER DIAGRAM
EE701	TYPICAL MOUNTING HEIGHT DETAILS
ES101	OVERALL SITE ELECTRICAL PLAN
ES102	SITE ELECTRICAL PLAN
EP100	TUNNEL LEVEL POWER PLAN
EP101a	FIRST LEVEL POWER PLAN - AREA A
EP101b	FIRST LEVEL POWER PLAN - AREA B
EP101c	FIRST LEVEL POWER PLAN - AREA C
EP101d	FIRST LEVEL POWER PLAN - AREA D
EP102a	SECOND LEVEL POWER PLAN - AREA A
~~EP102b~~	~~SECOND LEVEL POWER PLAN - AREA B~~
EP102d	SECOND LEVEL POWER PLAN - AREA D
~~EP103a~~	~~THIRD LEVEL POWER PLAN - AREA A~~
EP103b	THIRD LEVEL POWER PLAN - AREA B
EP104	PENTHOUSE LEVEL POWER PLAN
EP105	ROOF POWER PLAN
EP401	ENLARGED POWER PLANS
EP402	ENLARGED LAB POWER PLANS
EP601	POWER ONE-LINE DIAGRAM - MODULE 2 (a)
EP602	POWER ONE-LINE DIAGRAM - MODULE 2 (b)
EP603	POWER ONE-LINE DIAGRAM - MODULE 2 (c)
EP604	POWER ONE-LINE DIAGRAM - MODULE 2 (d)
EP605	POWER ONE-LINE DIAGRAM - MODULE 2 (e)
EP606	EXISTING POWER ONE-LINE DIAGRAM - MODULE 1 (a)
EP607	EXISTING POWER ONE-LINE DIAGRAM - MODULE 1 (b)
EP608	EXISTING POWER ONE-LINE DIAGRAM - MODULE 1 (c)
EP609	EXISTING POWER ONE-LINE DIAGRAM - MODULE 1 (d)
EP610	LAB EQUIPMENT SCHEDULE
EP611	MECHANICAL EQUIPMENT SCHEDULE - MOD 2 BLDG (a)
EP612	MECHANICAL EQUIPMENT SCHEDULE - MOD 2 BLDG (b)
EP613	MECHANICAL EQUIPMENT SCHEDULE - MOD 1 ADDITION
EP614	PANEL SCHEDULES
EP615	PANEL SCHEDULES
EP616	PANEL SCHEDULES
EP617	PANEL SCHEDULES
EP618	PANEL SCHEDULES
EP619	PANEL SCHEDULES
EP620	PANEL SCHEDULES
EP621	PANEL SCHEDULES
EP622	PANEL SCHEDULES
EP623	PANEL SCHEDULES
EP624	PANEL SCHEDULES
EP625	PANEL SCHEDULES
EP626	PANEL SCHEDULES
EP627	PANEL SCHEDULES
EP628	PANEL SCHEDULES
EP629	PANEL SCHEDULES
EL100	TUNNEL LEVEL LIGHTING PLAN
EL101a	FIRST LEVEL LIGHTING PLAN - AREA A
EL101b	FIRST LEVEL LIGHTING PLAN - AREA B
EL101c	FIRST LEVEL LIGHTING PLAN - AREA C
EL101d	FIRST LEVEL LIGHTING PLAN - AREA D
EL102a	SECOND LEVEL LIGHTING PLAN - AREA A
EL102b	SECOND LEVEL LIGHTING PLAN - AREA B
EL103a	THIRD LEVEL LIGHTING PLAN - AREA A
EL103b	THIRD LEVEL LIGHTING PLAN - AREA B
EL104	PENTHOUSE LEVEL LIGHTING PLAN
EL501	LIGHTING DETAILS AND DIAGRAMS
EL502	LIGHTING DETAILS AND DIAGRAMS
EL503	LIGHTING CONTROL DIAGRAMS
EL504	LIGHTING CONTROL DIAGRAMS
EL505	RELAY PANEL SCHEDULES
EL601	LIGHTING FIXTURE SCHEDULE
EL602	LIGHTING FIXTURE SCHEDULE (CONT.)
EY101a	FIRST LEVEL AUXILIARY PLAN - AREA A
EY101b	FIRST LEVEL AUXILIARY PLAN - AREA B
EY101c	FIRST LEVEL AUXILIARY PLAN - AREA C
EY102a	SECOND LEVEL AUXILIARY PLAN - AREA A
EY102b	SECOND LEVEL AUXILIARY PLAN - AREA B
EY103a	THIRD LEVEL AUXILIARY PLAN - AREA A
EY103b	THIRD LEVEL AUXILIARY PLAN - AREA B
EY104	PENTHOUSE LEVEL AUXILIARY PLAN
EY501	AUXILIARY DETAILS
EY601	AUXILIARY DIAGRAMS
EJ101a	FIRST LEVEL PLAN AUDIO VISUAL ROUGH-IN PLAN - AREA A
EJ101b	FIRST LEVEL PLAN AUDIO VISUAL ROUGH-IN PLAN - AREA B
EJ101c	FIRST LEVEL PLAN AUDIO VISUAL ROUGH-IN PLAN - AREA C
EJ102a	SECOND LEVEL AUDIO VISUAL ROUGH-IN PLAN - AREA A
EJ102b	SECOND LEVEL AUDIO VISUAL ROUGH-IN PLAN - AREA B
EJ103b	THIRD LEVEL AUDIO VISUAL ROUGH-IN PLAN - AREA B
EJ301	AUDIO VISUAL ROUGH-IN SECTION DETAILS
EJ302	AUDIO VISUAL ROUGH-IN SECTION DETAILS
EJ501	AUDIO VISUAL DETAILS
EJ601	AUDIO VISUAL SCHEDULES
EJ602	AV ROUGH IN RISER DIAGRAMS
EK101	LIGHTNING PROTECTION PLAN
EK501	LIGHTNING PROTECTION DETAILS
FA101a	FIRST LEVEL FIRE ALARM PLAN - AREA A
FA101b	FIRST LEVEL FIRE ALARM PLAN - AREA B
FA101c	FIRST LEVEL FIRE ALARM PLAN - AREA C
FA101d	FIRST LEVEL FIRE ALARM PLAN - AREA D
FA102a	SECOND LEVEL FIRE ALARM PLAN - AREA A
FA102b	SECOND LEVEL FIRE ALARM PLAN - AREA B
FA103a	THIRD LEVEL FIRE ALARM PLAN - AREA A
FA103b	THIRD LEVEL FIRE ALARM PLAN - AREA B
FA104	PENTHOUSE LEVEL FIRE ALARM PLAN
FA601	FIRE ALARM RISER

ABBREVIATIONS

NOTE: ALL ABBREVIATIONS MAY NOT BE USED.

1P	SINGLE POLE	LFMC	LIQUID TIGHT FLEXIBLE METAL CONDUIT
1PH	SINGLE-PHASE	LRA	LOCKED ROTOR AMPS
3/C	THREE-CONDUCTOR	LTG	LIGHTING
4W	FOUR-WIRE	LV	LOW VOLTAGE
A	ABOVE COUNTER	MAX	MAXIMUM
ADA	AMERICANS WITH DISABILITIES ACT	MC	METAL CLAD
ADJ	ADJACENT	MCA	MINIMUM CIRCUIT AMPS
AFF	ABOVE FINISHED FLOOR	MCB	MAIN CIRCUIT BREAKER
AFG	ABOVE FINISHED GRADE	MCC	MOTOR CONTROL CENTER
AIC	AMPERE INTERRUPTING CAPACITY	MCP	MOTOR CIRCUIT PROTECTION
		MDP	MAIN DISTRIBUTION PANEL
ALUM	ALUMINUM	MH	MANHOLE
AMP	AMPERE	MIN	MINIMUM
ANN	ANNUNCIATOR	MLO	MAIN LUGS ONLY
AP	ACCESS POINT (WIRELESS DATA)	MOCP	MAXIMUM OVERCURRENT PROTECTION
AR	AS REQUIRED	NA	NOT APPLICABLE
ASC	AMPS SHORT CIRCUIT	NC	NORMALLY CLOSED
ATS	AUTOMATIC TRANSFER SWITCH	NEC	NATIONAL ELECTRICAL CODE
AV	AUDIO VISUAL	NEMA	NATIONAL ELECTRICAL MANUFACTURERS ASSOCIATION
AWG	AMERICAN WIRE GAGE		
C	CEILING MOUNTED		
CB	CIRCUIT BREAKER	NFC	NATIONAL FIRE CODE
CCBA	CUSTOM COLOR AS SELECTED BY ARCHITECT	NFPA	NATIONAL FIRE PROTECTION ASSOCIATION
CCTV	CLOSED CIRCUIT TELEVISION	NIC	NOT IN CONTRACT
CF/CI	CONTRACTOR FURNISHED/ CONTRACTOR INSTALLED	NL	NIGHT LIGHT
		NO	NORMALLY OPEN
CF/OI	CONTRACTOR FURNISHED/ OWNER INSTALLED	NTS	NOT TO SCALE
		OC	ON CENTER
CFBA	CUSTOM FINISH AS SELECTED BY ARCHITECT	OCP	OVER CURRENT PROTECTION
		OF/CI	OWNER FURNISHED/ CONTRACTOR INSTALLED
CKT	CIRCUIT		
CND	CONDUIT	OF/OI	OWNER FURNISHED/ OWNER INSTALLED
CO	CONVENIENCE OUTLET		
CP	CONTROL PANEL	OFP	OBTAIN FROM PLANS
CT	CURRENT TRANSFORMER	OH DR	OVERHEAD (COILING) DOOR
CTV	CABLE TELEVISION	OL	OVERLOAD
CU	COPPER	PB	PUSHBUTTON
dBA	UNIT OF SOUND LEVEL	PF	POWER FACTOR
DPDT	DOUBLE POLE DOUBLE THROW	PH	PHASE
EA	EACH	PNL	PANEL
EM	EMERGENCY	PT	POTENTIAL TRANSFORMER
EMT	ELECTRICAL METALLIC TUBING	PTZ	PAN/TILT/ZOOM
ENT	ELECTRIC NONMETALLIC TUBING	QTY	QUANTITY
		RCP	REFLECTED CEILING PLAN
EPO	EMERGENCY POWER OFF	RMC	~~HIGH METAL CONDUIT~~
EQUIP	EQUIPMENT	RMP	ROCKY MOUNTAIN POWER
EX	EXISTING	RNC	~~HIGH NONMETALLIC CONDUIT~~
F	FURNITURE MOUNTED	RPM	REVOLUTIONS PER MINUTE
FA	FIRE ALARM	S/S	START/STOP
FCP	FIRE ALARM CONTROL PANEL	SCA	SHORT CIRCUIT AMPS
FLA	FULL LOAD AMPS	SCBA	STANDARD COLOR AS SELECTED BY ARCHITECT
FMC	FLEXIBLE METAL CONDUIT		
FOB	FREIGHT ON BOARD	SF	SQUARE FOOT (FEET)
FVNR	FULL VOLTAGE NON-REVERSING	SFBA	STANDARD FINISH AS SELECTED BY ARCHITECT
FVR	FULL VOLTAGE REVERSING	SPD	SURGE PROTECTIVE DEVICE
G	GROUND	SPDT	~~SINGLE POLE, DOUBLE THROW~~
GEN	GENERATOR	SPEC	SPECIFICATION
GFCI	GROUND FAULT INTERRUPTER	SPST	SINGLE POLE, SINGLE THROW
GFP	GROUND FAULT PROTECTION	ST	SINGLE THROW
HD	HEAVY DUTY	SWBD	SWITCHBOARD
HID	HIGH INTENSITY DISCHARGE	SWGR	SWITCHGEAR
HOA	HAND-OFF-AUTOMATIC	TL	TWIST LOCK
HP	HORSE POWER	TP	TWISTED PAIR
HPF	HIGH POWER FACTOR	TTB	TELEPHONE TERMINAL BOARD
HPS	HIGH PRESSURE SODIUM	TV	TELEVISION
HV	HIGH VOLTAGE	TVSS	TRANSIENT VOLTAGE SURGE SUPPRESSER
HZ	HERTZ		
I/O	INPUT/ OUTPUT	TYP	TYPICAL
IG	ISOLATED GROUND	UF	UNDERFLOOR
IMC	INTERMEDIATE METAL CONDUIT	UG	UNDERGROUND
		UPS	UNINTERRUPTIBLE POWER SUPPLY
IN/IS	INSULATED/ ISOLATED		
IR	INFRARED	V	VOLTS
J-BOX	JUNCTION BOX	VA	VOLT AMPERE
kV	KILOVOLT	VFC/VFD	VARIABLE FREQUENCY MOTOR CONTROLLER
kVA	KILOVOLT AMPERE		
kVAR	KILOVOLT AMPERE REACTIVE	W/	WITH
kW	KILOWATT	W/O	WITHOUT
kWh	KILOWATT HOUR	WP	WEATHERPROOF
LED	LIGHT EMITTING DIODE	XFMR	TRANSFORMER

GENERAL ELECTRICAL NOTES

1. CLARIFICATION METHODS: AT THE TIME OF BIDDING, BIDDERS SHALL FAMILIARIZE THEMSELVES WITH THE DRAWINGS AND SPECIFICATIONS. ANY QUESTIONS, MISUNDERSTANDINGS, CONFLICTS, DELETIONS, DISCONTINUED PRODUCTS, CATALOG NUMBER DISCREPANCIES, DISCREPANCIES BETWEEN THE EQUIPMENT SUPPLIED AND THE INTENT OR FUNCTION OF THE EQUIPMENT, ETC, SHALL BE SUBMITTED TO THE ARCHITECT/ENGINEER IN WRITING FOR CLARIFICATION PRIOR TO ISSUANCE OF THE FINAL ADDENDUM AND BIDDING OF THE PROJECT. WHERE DISCREPANCIES OR MULTIPLE INTERPRETATIONS OCCUR, THE MOST STRINGENT (WHICH IS GENERALLY RECOGNIZED AS THE MOST COSTLY) THAT MEETS THE INTENT OF THE DOCUMENTS SHALL BE ENFORCED.

2. OWNER FURNISHED ITEMS: THE OWNER WILL FURNISH MATERIAL AND EQUIPMENT AS INDICATED IN THE CONTRACT DOCUMENTS TO BE INCORPORATED INTO THE WORK. THESE ITEMS ARE ASSIGNED TO THE INSTALLER AND COSTS FOR RECEIVING, HANDLING, STORAGE, IF REQUIRED, AND INSTALLATION ARE INCLUDED IN THE CONTRACT SUM.

   A. THE INSTALLER'S RESPONSIBILITIES ARE THE SAME AS IF THE INSTALLER FURNISHED THE MATERIALS OR EQUIPMENT.

   B. THE OWNER WILL ARRANGE AND PAY FOR DELIVERY OF OWNER FURNISHED ITEMS FREIGHT ON BOARD JOB SITE AND THE INSTALLER WILL INSPECT DELIVERIES FOR DAMAGE. IF OWNER FURNISHED ITEMS ARE DAMAGED, DEFECTIVE OR MISSING, DOCUMENT DAMAGED ITEMS WITH THE TRANSPORT COMPANY AND THE OWNER WILL ARRANGE FOR REPLACEMENT. THE OWNER WILL ALSO ARRANGE FOR MANUFACTURER'S FIELD SERVICES, AND THE DELIVERY OF MANUFACTURER'S WARRANTIES AND BONDS TO THE INSTALLER.

   C. THE INSTALLER IS RESPONSIBLE FOR DESIGNATING THE DELIVERY DATES OF OWNER FURNISHED ITEMS AND FOR RECEIVING, UNLOADING AND HANDLING OWNER FURNISHED ITEMS AT THE SITE.THE INSTALLER IS RESPONSIBLE FOR PROTECTING OWNER FURNISHED ITEMS FROM DAMAGE, INCLUDING DAMAGE FROM EXPOSURE TO THE ELEMENTS, AND TO REPAIR OR REPLACE ITEMS DAMAGED AS A RESULT OF HIS OPERATIONS.

3. EXPOSED STRUCTURE AREAS (EXCLUDING MECHANICAL, ELECTRICAL, AND COMMUNICATION SPACES): INSTALL RACEWAYS BETWEEN DECK AND STRUCTURE WHEREVER POSSIBLE IN EXPOSED STRUCTURE CEILING AREAS. ROUTE RACEWAYS IN CONCEALED AREAS WHEREVER POSSIBLE. REFER ALL CONDITIONS WHERE RACEWAYS MUST BE INSTALLED WHICH CANNOT COMPLY WITH THESE REQUIREMENTS TO THE ARCHITECT.

4. SUBMITTALS: PROVIDE ORIGINAL ELECTRONIC PDF FORMAT, BOUND, BOOKMARKED (EACH SECTION AND PRODUCT), AND HIGHLIGHTED. JOB NAME AND SUBCONTRACTOR SHALL BE ON THE FRONT COVER. PREPARE INDEX OF EQUIPMENT SUBMITTED IN EACH TAB.

5. REFLECTED CEILING PLANS: COORDINATE THE LOCATION OF LIGHT FIXTURES WITH THE ARCHITECTURAL REFLECTED CEILING PLANS. REFER ALL DISCREPANCIES TO THE ARCHITECT AND ENGINEER.

6 ALL WORK SHALL BE DONE ACCORDING TO THE CURRENT NATIONAL ELECTRIC CODE (NEC), IBC, NFPA, AND IFC. COMPLIANCE AND FINAL APPROVAL IS SUBJECT TO THE ON SITE FIELD INSPECTION OF THE AHJ.

DEFINITIONS

NOTE: ALL DEFINITIONS MAY NOT BE USED.

INDICATED: THE TERM "INDICATED" REFERS TO GRAPHIC REPRESENTATIONS, NOTES, OR SCHEDULES ON THE DRAWINGS, OTHER PARAGRAPHS OR SCHEDULES IN THE SPECIFICATIONS, AND SIMILAR REQUIREMENTS IN THE CONTRACT DOCUMENTS. WHERE TERMS SUCH AS "SHOWN", "NOTED", "SCHEDULED", AND "SPECIFIED" ARE USED, IT IS TO HELP THE READER LOCATE THE REFERENCE, NO LIMITATION ON LOCATION IS INTENDED.

DIRECTED: TERMS SUCH AS "DIRECTED", "REQUESTED", AUTHORIZED", "SELECTED", "APPROVED", "REQUIRED", AND "PERMITTED" MEAN "DIRECTED BY THE ENGINEER", "REQUESTED BY THE ENGINEER", AND SIMILAR PHRASES.

APPROVED: THE TERM "APPROVED", WHERE USED IN CONJUNCTION WITH THE ENGINEER'S ACTION ON THE CONTRACTOR'S SUBMITTALS, APPLICATIONS, AND REQUESTS, IS LIMITED TO THE ENGINEER'S DUTIES AND RESPONSIBILITIES AS STATED IN GENERAL AND SUPPLEMENTARY CONDITIONS.

FURNISH: THE TERM "FURNISH" IS USED TO MEAN "SUPPLY AND DELIVER TO THE PROJECT SITE, READY FOR UNLOADING, UNPACKING, ASSEMBLY, INSTALLATION, AND SIMILAR OPERATIONS."

INSTALL: THE TERM "INSTALL" IS USED TO DESCRIBE OPERATIONS AT PROJECT SITE INCLUDING THE ACTUAL "UNLOADING, UNPACKING, ASSEMBLY, ERECTION, PLACING, ANCHORING, APPLYING, WORKING TO DIMENSION, FINISHING, CURING, PROTECTING, CLEANING, AND SIMILAR OPERATIONS."

PROVIDE: THE TERM "PROVIDE" MEANS "TO FURNISH AND INSTALL, COMPLETE AND READY FOR THE INTENDED USE."

INSTALLER: AN "INSTALLER" IS THE CONTRACTOR OR AN ENTITY ENGAGED BY THE CONTRACTOR, EITHER AS AN EMPLOYEE, SUBCONTRACTOR, OR SUB-SUBCONTRACTOR, FOR PERFORMANCE OF A PARTICULAR CONSTRUCTION ACTIVITY, INCLUDING INSTALLATION, ERECTION, APPLICATION, AND SIMILAR OPERATIONS. INSTALLERS ARE REQUIRED TO BE EXPERIENCED IN THE OPERATIONS THEY ARE ENGAGED TO PERFORM.

TECHNOLOGY SYSTEMS: THE TERM "TECHNOLOGY SYSTEMS" IS USED TO DESCRIBE ALL LOW VOLTAGE SYSTEMS GENERALLY REFERRED TO AS "SPECIAL SYSTEMS". THESE SYSTEMS INCLUDE BUT ARE NOT NECESSARILY LIMITED TO ALL SYSTEMS WHICH UTILIZE VOLTAGES OF LESS THAN 71 VOLTS SUCH AS SOUND SYSTEMS, VIDEO SYSTEMS, TV SYSTEMS, SECURITY SYSTEMS, VOICE AND DATA CABLING SYSTEMS, ETC...

SITE COORDINATION

THE LOCATION, CAPACITY, AND VOLTAGE OF THE LINES ARE ALL IN ACCORDANCE WITH DATA GIVEN THIS OFFICE BY THE UTILITY COMPANY. COORDINATE WITH THE LOCAL UTILITY COMPANY FOR THE INSTALLATION OF THE ELECTRICAL SERVICE. COMPLY WITH UTILITY REGULATIONS. REPORT DISCREPANCIES TO THE ENGINEER.

ELECTRIC UTILITY

ROCKY MOUNTAIN POWER
1569 W. NORTH TEMPLE
SALT LAKE CITY, UT. 84116

PERSON CONTACTED: RYAN COOK
DATE: 01-01-2015
PHONE NUMBER: (801) 220-7217
EMAIL:Ryan.Cook@rockymountainpower.net

CRSA
649 E. South Temple
Salt Lake City, UT 84102
801.355.5915

MWL
11798 N. Lakeridge Pkwy.
Ashland, VA 23005
804-228-7473

State of Utah
Department of Administrative Services
Division of Facilities Construction & Management
4110 State Office Building
Salt Lake City, Utah 84114
Phone: (801) 538 - 3018
Fax: (801) 538 - 3267

DFCM APPROVAL STAMP

LICENSED PROFESSIONAL ENGINEER
No. 181563
DAVID E. WESEMANN
04-21-2014
STATE OF UTAH

ARCHITECT-ENGINEER STAMP

Unified State Laboratory Module 2

4451 South 2700 West, Taylorsville, UT 84118

DFCM #: 13020300

Project #: B13-024

DATE:	ISSUE TYPE:
April 21, 2014	BID SET

MARK	DATE	DESCRIPTION
1	May 8, 2015	ADDENDUM #1

CHECKED BY	D. WESEMANN
DRAWN BY	DLM

SHEET INDEX, ABBREVIATIONS, AND GENERAL NOTES

EE001

VOLUME 2

C:\Users\dlm\Documents\20130362Elec Central_DLM (8432).rvt
5/7/2015 5:22:05 PM

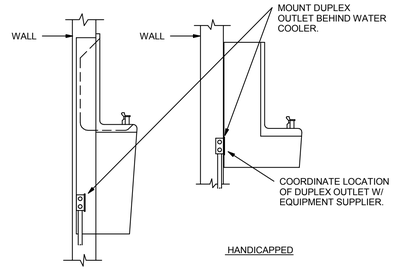

A2 ELECTRIC WATER COOLER DETAIL

SCALE: NTS

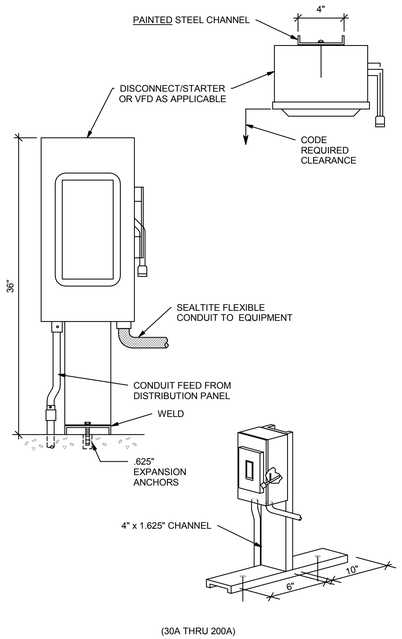

A3 REMOTE DISCONNECT/STARTER

SCALE: NTS

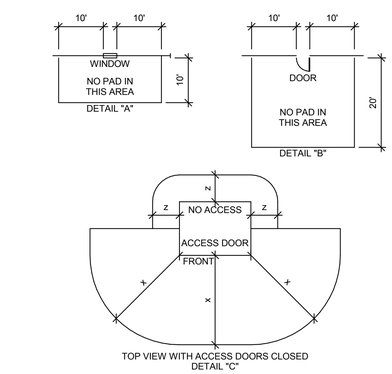

CLEARANCE GENERAL NOTES:

1. CLEARANCES: THE FRONT OF THE PAD SHOULD ALWAYS FACE AWAY FROM ADJACENT STRUCTURES AND BE FREE OF OBSTRUCTIONS. AT LEAST 3 FEET MUST SEPARATE THE EDGES OF THE PAD FROM ANY ADJACENT STRUCTURE. THE EDGES OF THE PAD MUST BE AT LEAST 10 FEET FROM ANY COMBUSTIBLE STRUCTURE. IF AN ADJACENT STRUCTURE HAS ANY OVERHANG OR EAVE WITHIN 27 VERTICAL FEET OF THE TOP OF THE PAD, CLEARANCES MUST BE MEASURED FROM THE OUTSIDE OF THE OVERHANG. THE PAD MUST NOT BE PLACED IN AN AREA 10 FEET IN LINE WITH OR 10 FEET TO EITHER SIDE OF ANY WINDOW IN AN ADJACENT STRUCTURE (SEE DETAIL "A"). CLEARANCE FOR A DOOR MUST BE 20 FEET IN LINE WITH IT AND 10 FEET ON THE SIDES (SEE DETAIL "B"). PADS MUST NOT BE PLACED WITHIN 15 FEET OF ANY VALVE OR WITHIN 25 FEET OF ANY PLUMBING OR STORAGE FACILITY CONTAINING FLAMMABLE MATERIAL. NO WALLS, FENCES, OR ANY OTHER OBSTRUCTIONS WILL BE PLACED WITHIN 3 FEET OF THE SIDES OR BACK OF THE PAD, OR WITHIN 10 FEET OF THE FRONT OF THE PAD (SEE DETAIL "C"). THE AREA IN FRONT OF THE PAD MUST HAVE 10 FEET OF CLEAR, LEVEL WORKING AREA FOR MAINTENANCE OF THE TRANSFORMER. THE PAD MAY NOT BE PLACED IN LINE WITH AN AIR INTAKE WITHIN 32 VERTICAL FEET OF THE SURFACE PAD. ALSO VERTICALLY, IT MUST NOT BE PLACED WITHIN 12 FEET OF A DOOR OR WINDOW. VAULTS SHALL BE LOCATED WITHIN 15 FEET OF A GRAVELED OR PAVED SURFACE SUITABLE FOR INCIDENTAL HEAVY TRUCK ACCESS.

2. BARRIERS: IF THE TRANSFORMER PAD IS TO BE LOCATED IN AREAS SUBJECT TO VEHICULAR TRAFFIC, (PARKING LOTS, DRIVEWAYS, ETC) CONTACT ROCKY MOUNTAIN POWER FOR PROTECTIVE BARRIER REQUIREMENTS.

3. IF THE TRANSFORMER WILL NOT COVER THE CABLE OPENINGS ON THESE STANDARD PADS, SEAL THE SIDES OF THE CABLE OPENING TO FIT THE TRANSFORMER USING SACKRETE OR COMPARABLE.

MINIMUM DISTANCE REQUIRED FROM PAD:

x = 10 FT. CLEAR AREA IN FRONT OF, ANY EQUIPMENT ACCESS DOOR OR OPENING TO ALLOW THE USE OF HOT STICKS. (SEE DIMENSIONS IN DETAIL "C". LOCATE PADMOUNTED EQUIPMENT WITH ACCESS DOORS AWAY FROM BUILDING WALLS OR OTHER BARRIERS TO ALLOW SAFE WORKING PRACTICES. IF THE EQUIPMENT ACCESS SIDE MUST FACE A WALL, ALLOW 10 FEET FOR WORKING CLEARANCE. NO VEGETATION OR TRIP HAZARDS IN THIS WORK SPACE ARE PERMITTED.)

y = 8 FT FROM ANY STRUCTURE OR ROOF OVERHANG CONSISTING OF COMBUSTIBLE MATERIAL. 3 FT TO NON-COMBUSTIBLE STRUCTURES HAVING NO OPENINGS CLOSER THAN 10 FT. 6' FROM ANY METALLIC OBJECT INCLUDING METERING EQUIPMENT.

z = 3 FT CLEAR AREA ON NON-ACCESS SIDES OF THE EQUIPMENT TO ALLOW WORK SPACE. (SEE DIMENSIONS IN DETAILS "C".); INCREASE TO 6' FOR ANY METALLIC OBJECT.

1

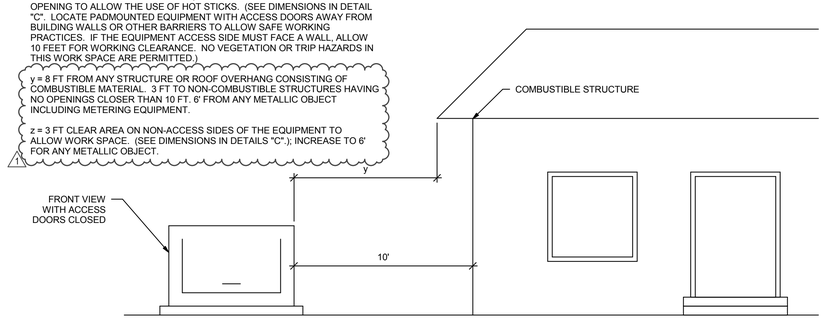

A4 TRANSFORMER CLEARANCE DETAIL

SCALE: NTS

CRSA
649 E. South Temple
Salt Lake City, UT 84102
801.355.5915

MWL
11798 N. Lakeridge Pkwy.
Ashland, VA 23005
804-228-7473

State of Utah
Department of Administrative Services
Division of Facilities Construction & Management
4110 State Office Building
Salt Lake City, Utah 84114
Phone: (801) 538 - 3018
Fax: (801) 538 - 3267

DFCM APPROVAL STAMP

LICENSED PROFESSIONAL ENGINEER
No. 181563
DAVID E. WESEMANN
04-21-2014
STATE OF UTAH

ARCHITECT-ENGINEER STAMP

Unified State Laboratory Module 2

4451 South 2700 West, Taylorsville, UT 84118

DFCM #: 13020300

Project #: B13-024

DATE:	ISSUE TYPE:
April 21, 2014	BID SET

MARK	DATE	DESCRIPTION
1	May 8, 2015	ADDENDUM #1

CHECKED BY: D. WESEMANN

DRAWN BY: DLM

DETAILS

EE503

VOLUME 2

C:\Users\dlm\Documents\20130362Elec Central_DLM (8432).rvt
5/7/2015 5:22:10 PM

2.4 - 25kV, 3-PHASE TRANSFORMER PADVAULT WITH ACCESS, STOCK ITEM 7992600-STOCK ITEM 1790023
35kV, 3-PHASE TRANSFORMER PADVAULT WITH ACCESS, STOCK ITEM 7992602-STOCK ITEM 1008977

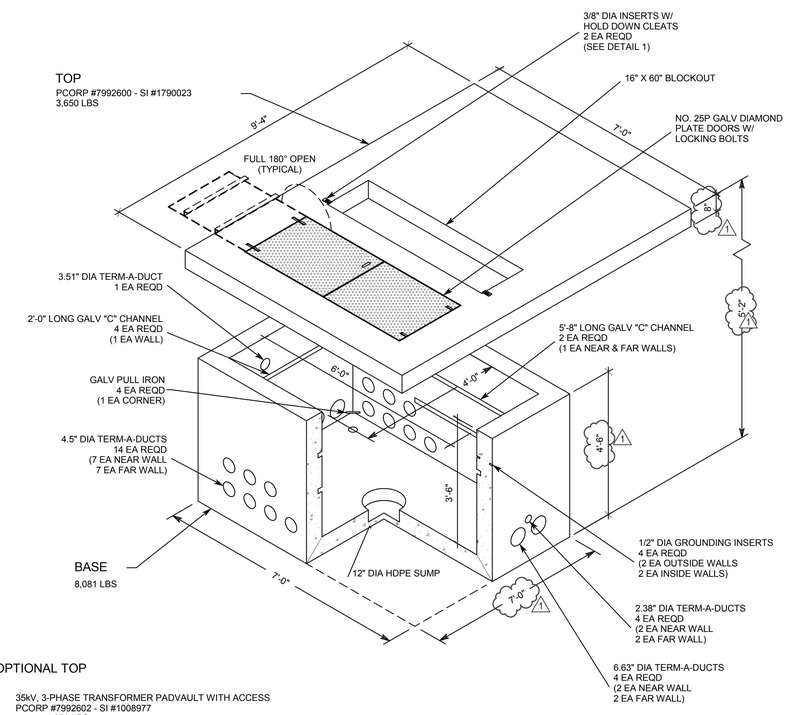

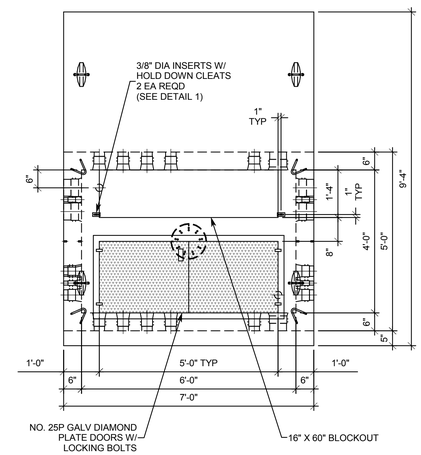

PLAN VIEW

2.4-25 kV, 3-PHASE TRANSFORMER PADVAULT WITH ACCESS
PCORP #7992600 - SI #1790023

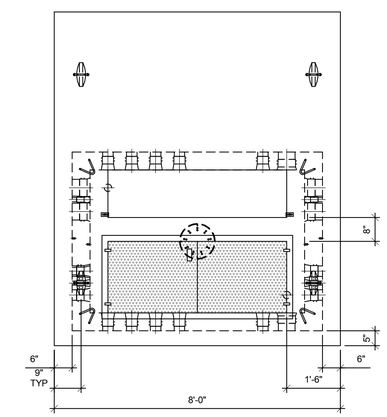

PLAN VIEW

35 kV, 3-PHASE TRANSFORMER PADVAULT WITH ACCESS
PCORP #7992602 - SI #1008977

OPTIONAL TOP

35kV, 3-PHASE TRANSFORMER PADVAULT WITH ACCESS
PCORP #7992602 - SI #1008977
4,350 LBS

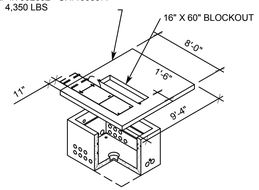

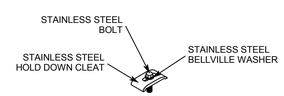

HOLD DOWN CLEAT
DETAIL 1

1 1/4" X 2 1/2" STAINLESS STEEL HOLD-DOWN CLEAT - 2 REQD
3/8" X 1 1/4" STAINLESS STEEL BOLT - 2 REQD
3/8" STAINLESS STEEL BELLVILLE WASHER - 2 REQD

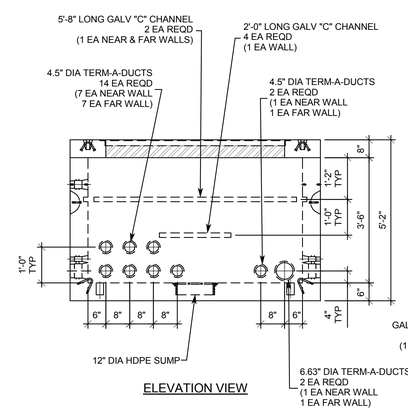

ELEVATION VIEW

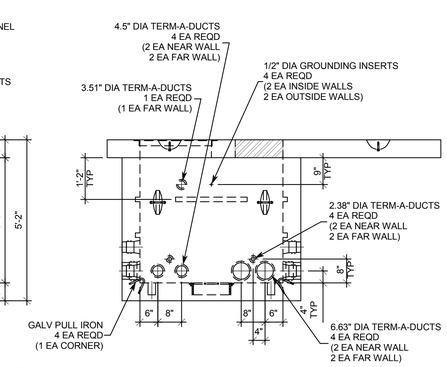

END VIEW

*LIFTING DEVICE TYPE & LOCATION
MAY CHANGE WITHOUT NOTICE.

NOTE: PRIOR TO ORDERING AND INSTALLING THE PADVAULT, SUBMIT PADVAULT TO ROCKY MOUNTAIN POWER FOR APPROVAL AND VERIFICATION, AND COORDINATE EXACT SIZE AND LOCATION OF DUCT OPENINGS WITH ROCKY MOUNTAIN POWER.

A2 THREE-PHASE TRANSFORMER PADVAULT (ROCKY MOUNTAIN POWER STANDARD)
SCALE: NTS

CRSA
649 E. South Temple
Salt Lake City, UT 84102
801.355.5915

MWL
11798 N. Lakeridge Pkwy.
Ashland, VA 23005
804-228-7473

State of Utah
Department of Administrative Services
Division of Facilities Construction & Management
4110 State Office Building
Salt Lake City, Utah 84114
Phone: (801) 538 - 3018
Fax: (801) 538 - 3267

DFCM APPROVAL STAMP

LICENSED PROFESSIONAL ENGINEER
No. 181563
DAVID E. WESEMANN
04-21-2014
STATE OF UTAH

ARCHITECT-ENGINEER STAMP

Unified State Laboratory Module 2
4451 South 2700 West,
Taylorsville, UT 84118

DFCM #:	13020300
Project #:	B13-024

DATE:	ISSUE TYPE:
April 21, 2014	BID SET

MARK	DATE	DESCRIPTION
1	May 8, 2015	ADDENDUM #1

CHECKED BY	D. WESEMANN
DRAWN BY	DLM

DETAILS

EE504
VOLUME 2

C:\Users\dlm\Documents\2013\3502\Elec-Central_DLM (8432).rvt
5/7/2015 5:22:12 PM

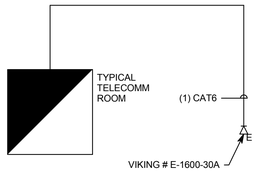

D1 ELEVATOR LOBBY EMERGENCY PHONE SINGLE-LINE

SCALE: N.T.S.

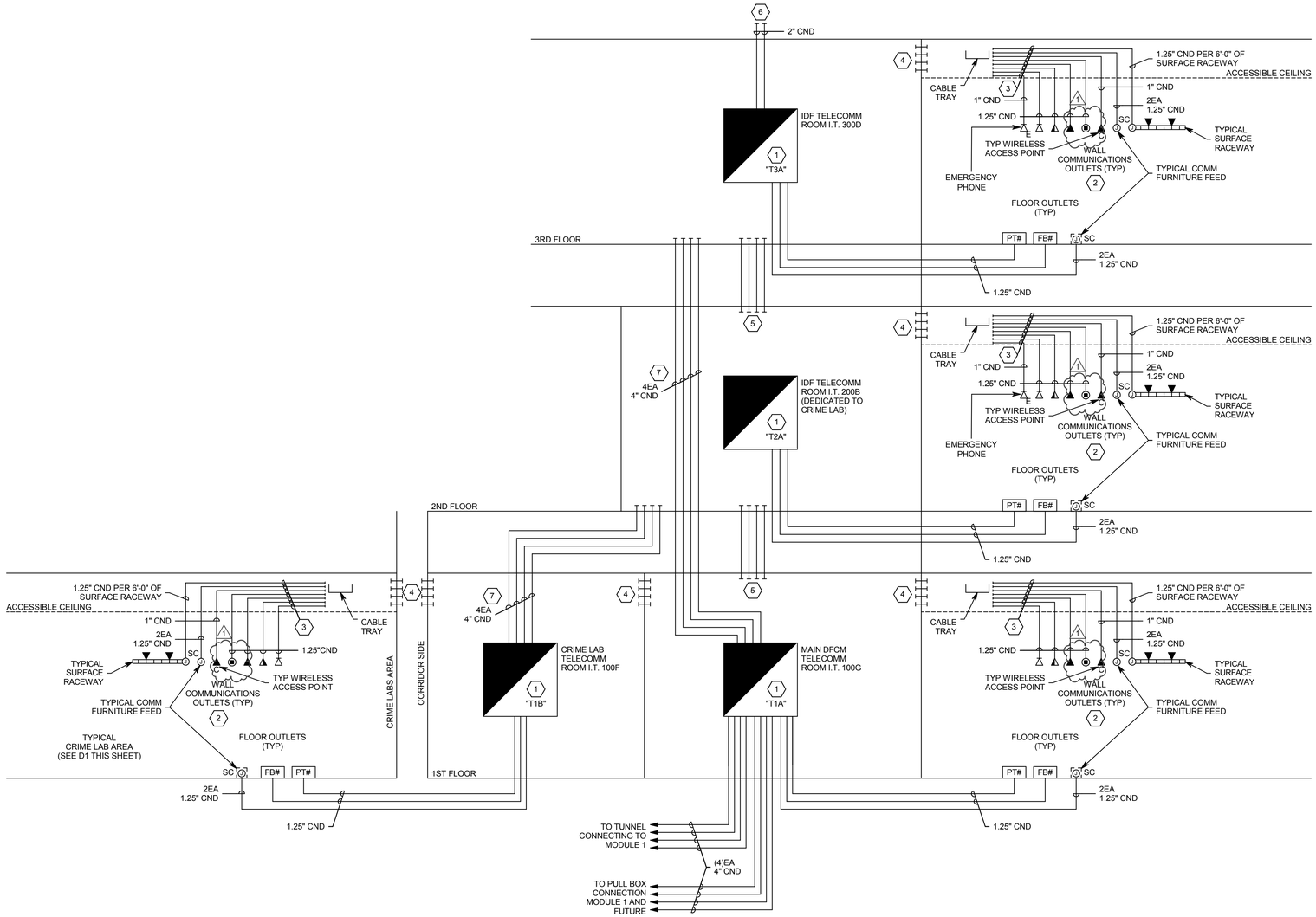

A2 TELECOMM RACEWAY RISER DIAGRAM

SCALE: NTS

GENERAL SHEET NOTES

1. LOCATE CABLE TRAYS ABOVE ACCESSIBLE CEILINGS, BELOW DUCT WORK AND PIPING. ALLOW SUFFICIENT SPACE ABOVE CEILING GRID AND BELOW THE CABLE TRAY TO ALLOW REMOVAL OF CEILING TILES TO ACCESS CABLE TRAY.
2. MAINTAIN 12" SEPARATION BETWEEN CABLE TRAY AND LIGHTING FIXTURES, AND 6" SEPARATION BETWEEN CABLE TRAY AND POWER RACEWAYS AND CABLES.
3. ROUTE EMPTY RACEWAYS FOR TELECOMM CABLING SUCH THAT WHEN CABLING IS RUN FROM OUTLET TO I.T. CLOSET THE CABLE DISTANCE WILL NOT EXCEED 250' LINEAR FEET.
4. GROUND CABLE TRAY SECTIONS.

SHEET KEYNOTES

1. PROVIDE 0.75" THICK X 8' HIGH FIRE-HEATED, PAINTED PLYWOOD ON ALL WALLS OF COMMUNICATIONS ROOMS.
2. PROVIDE DEEP 4" SQUARE BOX WITH SINGLE GANG MUD RING AND COVER PLATE.
3. STUB CONDUITS ALL THE WAY TO CABLE TRAY. PROVIDE INSULATED THROATS.
4. STUB 4EA 4" CND SLEEVES THROUGH WALL ABOVE CEILING INTO COMMUNICATIONS ROOM. FIRE STOP AFTER CABLING INSTALLATION IS COMPLETE.
5. PROVIDE 4" CND SLEEVES BETWEEN FLOORS. FIRE STOP AFTER CABLING INSTALLATION IS COMPLETE.
6. STUB CONDUITS TO ROOF. PROVIDE FLASHING AND CAP.
7. PROVIDE CONTINUOUS CONDUIT BETWEEN ROOMS AS INDICATED TO KEEP SEPARATION OF CRIME LAB TELECOMM SPACES.

CRSA
649 E. South Temple
Salt Lake City, UT 84102
801.355.5915

MWL
11798 N. Lakeridge Pkwy.
Ashland, VA 23005
804-228-7473

State of Utah
Department of Administrative Services
Division of Facilities Construction & Management
4110 State Office Building
Salt Lake City, Utah 84114
Phone: (801) 538 - 3018
Fax: (801) 538 - 3267

DFCM APPROVAL STAMP

LICENSED PROFESSIONAL ENGINEER
No. 181563
DAVID E. WESEMANN
04-21-2014
STATE OF UTAH

ARCHITECT-ENGINEER STAMP

Unified State Laboratory Module 2

4451 South 2700 West, Taylorsville, UT 84118

DFCM #:	13020300
Project #:	B13-024

DATE:	ISSUE TYPE:
April 21, 2014	BID SET

MARK	DATE	DESCRIPTION
1	May 8, 2015	ADDENDUM #1

CHECKED BY	D. WESEMANN
DRAWN BY	DLM

TELECOMM RACEWAY RISER DIAGRAM

EE601

VOLUME 2

C:\Users\dlm\Documents\2013\3502\Elec-Central_DLM (8432).rvt
5/7/2015 5:22:15 PM

GENERAL SHEET NOTES

SHEET KEYNOTES

1. EXISTING 6" CND PROVIDED IN PREVIOUS PROJECT FOR USE OF RMP PRIMARY POWER. FIELD VERIFY EXACT LOCATION.
2. EXISTING CONDUITS STUBBED OUT FROM MODULE 1 FOR FUTURE USE (NOT ANTICIPATED TO BE USED FOR MODULE 2). LOCATE AND MARK ON RECORD DRAWINGS.
3. LOCATE AND PROTECT EXISTING CONDUIT STUBOUTS DURING CONSTRUCTION OF NEW ADDITION. EXTEND CONDUITS AND STUB BEYOND THE EXTENTS OF THE NEW ADDITION.
4. EXISTING TELECOMM CONDUITS STUBBED OUT OF MODULE 1. FIELD VERIFY LOCATION TO CONNECT AND EXTEND AS INDICATED.
5. EXTEND TELECOMM CONDUITS. PROVIDE 4'X4'X4' CONCRETE PULL BOX WITH HINGED METAL LID, THEN PROVIDE NEW (4) 4" CONDUITS FROM PULL BOX INTO NEW BUILDING MAIN TELECOMM ROOM.
6. PROVIDE 1 EA, 1" C FOR GATE CONTROL BACK TO ACS1 IN COMM ROOM 100G.
7. CIRCUIT TO 120/208 V GENERATOR AUXILIARY PANEL.
8. RECEPTACLE OUTLET FOR IRRIGATION CONTROLLER. PROVIDE 2" CND FROM DFCM STORAGE ROOM #116 TO APPROXIMATE LOCATION SHOWN ON ES102.
9. MOUNT CARD READER ON PEDESTAL INDICATED. PROVIDE CONDUITS FROM PEDESTALS TO LOCATION AT GATE CONTROLLER. SEE KEYNOTE 6.
10. PROVIDE PULL-BOX PER RMP REQUIREMENTS. COORDINATE WITH RMP. (1)
11. PROVIDE (2) 6" CND TO RMP SERVICE POINT. VERIFY EXACT LOCATION WITH RMP.

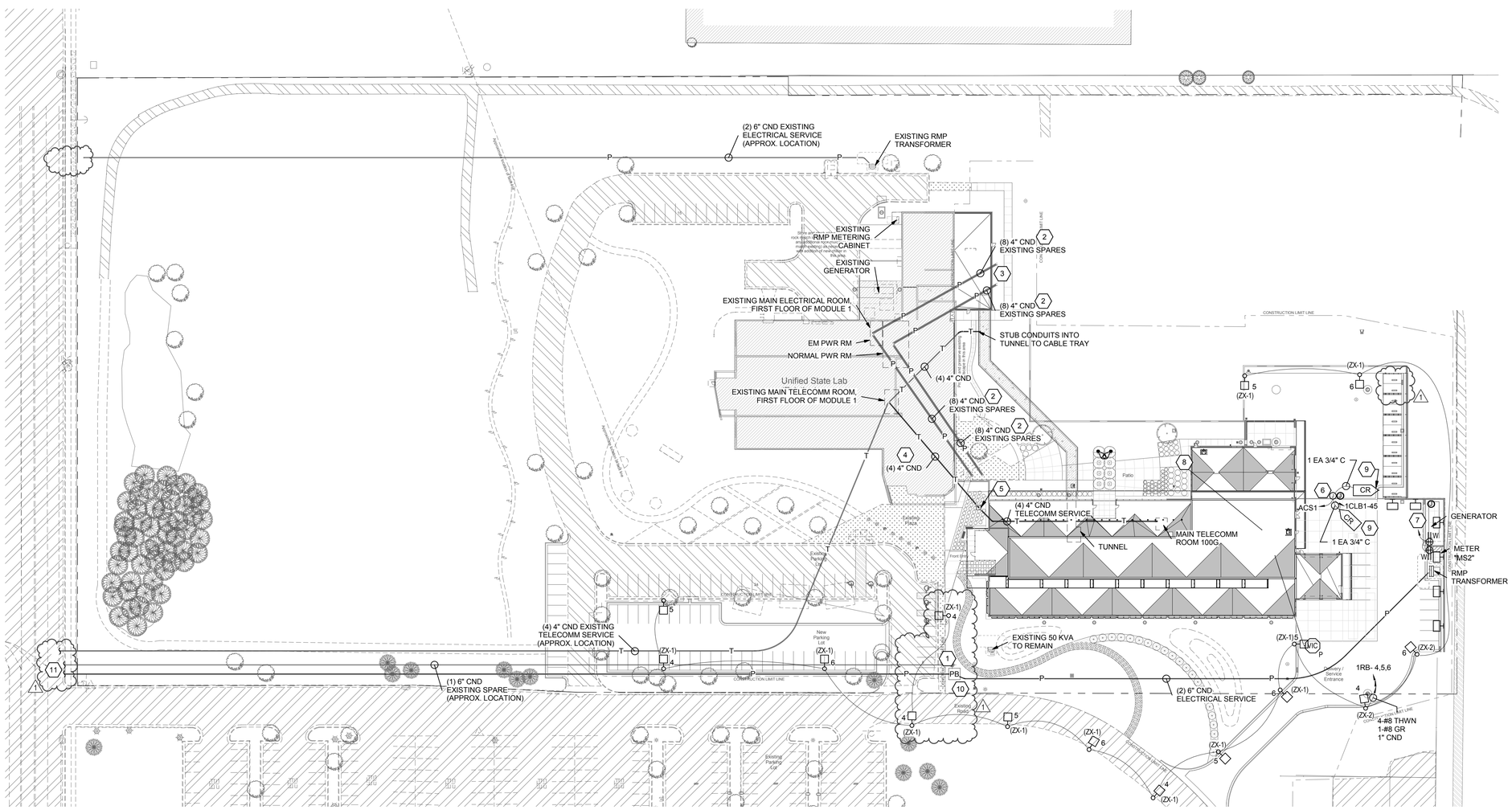

A1 OVERALL ELECTRICAL SITE PLAN

SCALE: 1" = 50'-0"

CRSA
649 E. South Temple
Salt Lake City, UT 84102
801.355.5915

MWL
11798 N. Lakeridge Pkwy.
Ashland, VA 23005
804-228-7473

State of Utah
Department of Administrative Services
Division of Facilities Construction & Management
4110 State Office Building
Salt Lake City, Utah 84114
Phone: (801) 538 - 3018
Fax: (801) 538 - 3267

DFCM APPROVAL STAMP

LICENSED PROFESSIONAL ENGINEER No. 181563 DAVID E. WESEMANN 04-21-2014 STATE OF UTAH

ARCHITECT-ENGINEER STAMP

Unified State Laboratory Module 2

4451 South 2700 West, Taylorsville, UT 84118

DFCM #:	13020300
Project #:	B13-024

DATE:	ISSUE TYPE:
April 21, 2014	BID SET

MARK	DATE	DESCRIPTION
1	May 8, 2015	ADDENDUM #1

CHECKED BY	D. WESEMANN
DRAWN BY	DLM

OVERALL SITE ELECTRICAL PLAN

ES101

VOLUME 2

C:\Users\dlm\Documents\2013\3362Elec Central_DLM_(8432).rvt
5/7/2015 5:28:16 PM

GENERAL SHEET NOTES

SHEET KEYNOTES

1. EXISTING 6" CND PROVIDED IN PREVIOUS PROJECT FOR USE OF RMP PRIMARY POWER. FIELD VERIFY EXACT LOCATION.
2. EXISTING CONDUITS STUBBED OUT FROM MODULE 1 FOR FUTURE USE (NOT ANTICIPATED TO BE USED FOR MODULE 2). LOCATE AND MARK ON RECORD DRAWINGS.
3. LOCATE AND PROTECT EXISTING CONDUIT STUBOUTS DURING CONSTRUCTION OF NEW ADDITION. EXTEND CONDUITS AND STUB BEYOND THE EXTENTS OF THE NEW ADDITION.
4. EXISTING TELECOMM CONDUITS STUBBED OUT OF MODULE 1. FIELD VERIFY LOCATION TO CONNECT AND EXTEND AS INDICATED.
5. EXTEND TELECOMM CONDUITS. PROVIDE 4'X4'X4' CONCRETE PULL BOX WITH HINGED METAL LID, THEN PROVIDE NEW (4) 4" CONDUITS FROM PULL BOX INTO NEW BUILDING MAIN TELECOMM ROOM.
6. PROVIDE 1 EA, 1" C FOR GATE CONTROL BACK TO ACS1 IN COMM ROOM 100G.
7. CIRCUIT TO 120/208 V GENERATOR AUXILIARY PANEL.
8. IRRIGATION CONTROLLER LOCATION. PROVIDE 2" CONDUIT FROM DFCM STORAGE ROOM #116 TO APPROXIMATE LOCATION 4' FROM EDGE OF BUILDING FOOTPRINT.
9. CONNECTION FOR GENERATOR AUXILIARY PANEL. FED FROM PANEL "1EL". SEE EP602 FOR WIRE AND CONDUIT REQUIREMENTS. COORDINATE EXACT LOCATION WITH GENERATOR MANUFACTURER.
10. REMOTE POWER SUPPLY FOR (OL-1) LIGHTS TO BE LOCATED IN ELECTRICAL ROOM 100L. COORDINATE LOCATION WITH ELECTRICAL GEAR AND REQUIRED CLEARANCES.

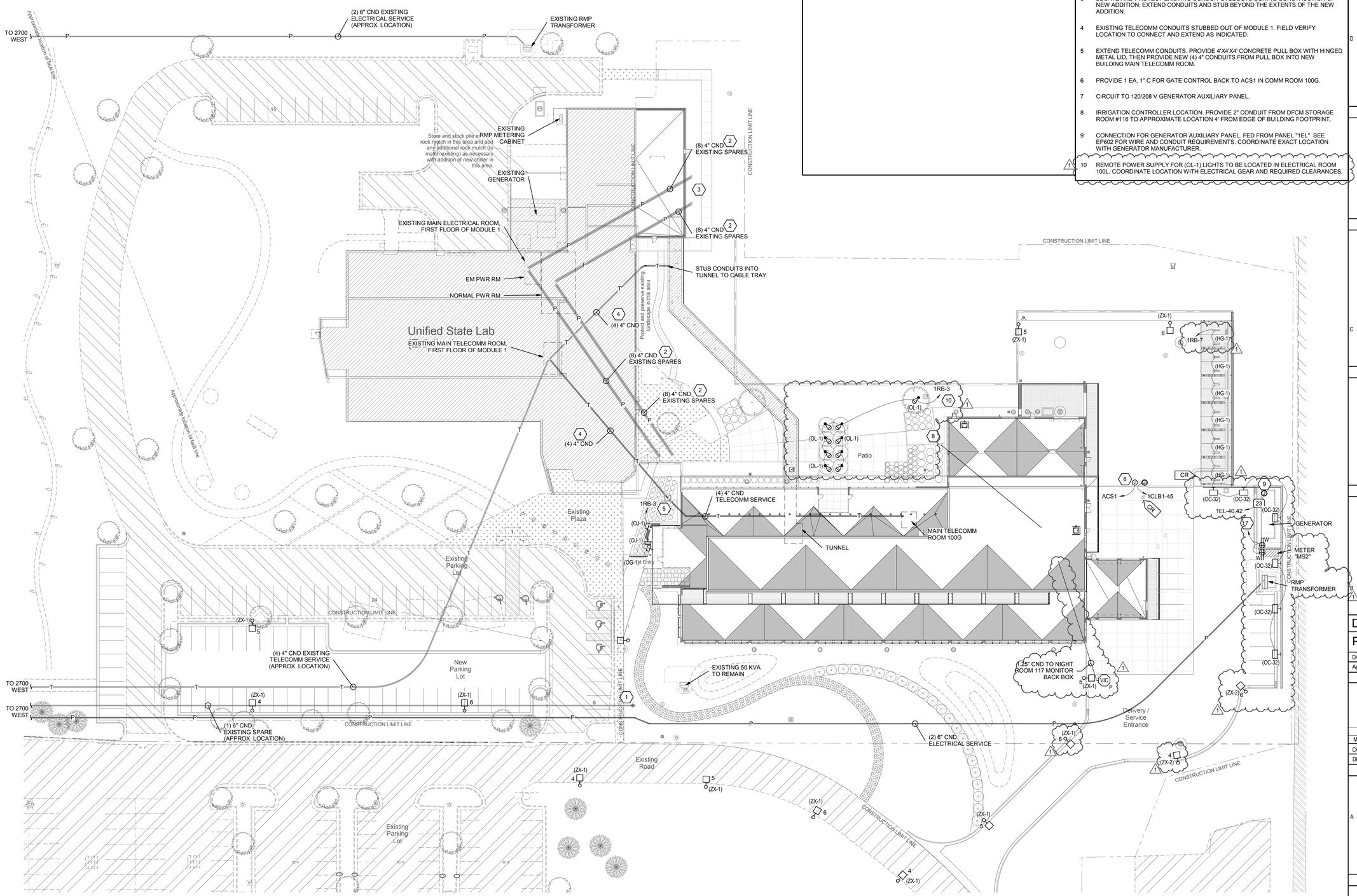

A1 ELECTRICAL SITE PLAN

SCALE: 1" = 30'-0"

CRSA
649 E. South Temple
Salt Lake City, UT 84102
801.355.5915

MWL
11798 N. Lakeridge Pkwy.
Ashland, VA 23005
804-228-7473

State of Utah
Department of Administrative Services
Division of Facilities Construction & Management
DFCM
4110 State Office Building
Salt Lake City, Utah 84114
Phone: (801) 538 - 3018
Fax: (801) 538 - 3267

DFCM APPROVAL STAMP

LICENSED PROFESSIONAL ENGINEER
No. 181563
DAVID E. WESEMANN
04-21-2014
STATE OF UTAH

ARCHITECT-ENGINEER STAMP

Unified State Laboratory Module 2

4451 South 2700 West, Taylorsville, UT 84118

DFCM #: 13020300

Project #: B13-024

DATE:	ISSUE TYPE:
April 21, 2014	BID SET

MARK	DATE	DESCRIPTION
1	May 8, 2015	ADDENDUM #1

CHECKED BY	D. WESEMANN
DRAWN BY	DLM

SITE ELECTRICAL PLAN

ES102

VOLUME 2

C:\Users\dlm\Documents\20130362Elec Central_DLM (84324).rvt
5/7/2015 5:28:36 PM

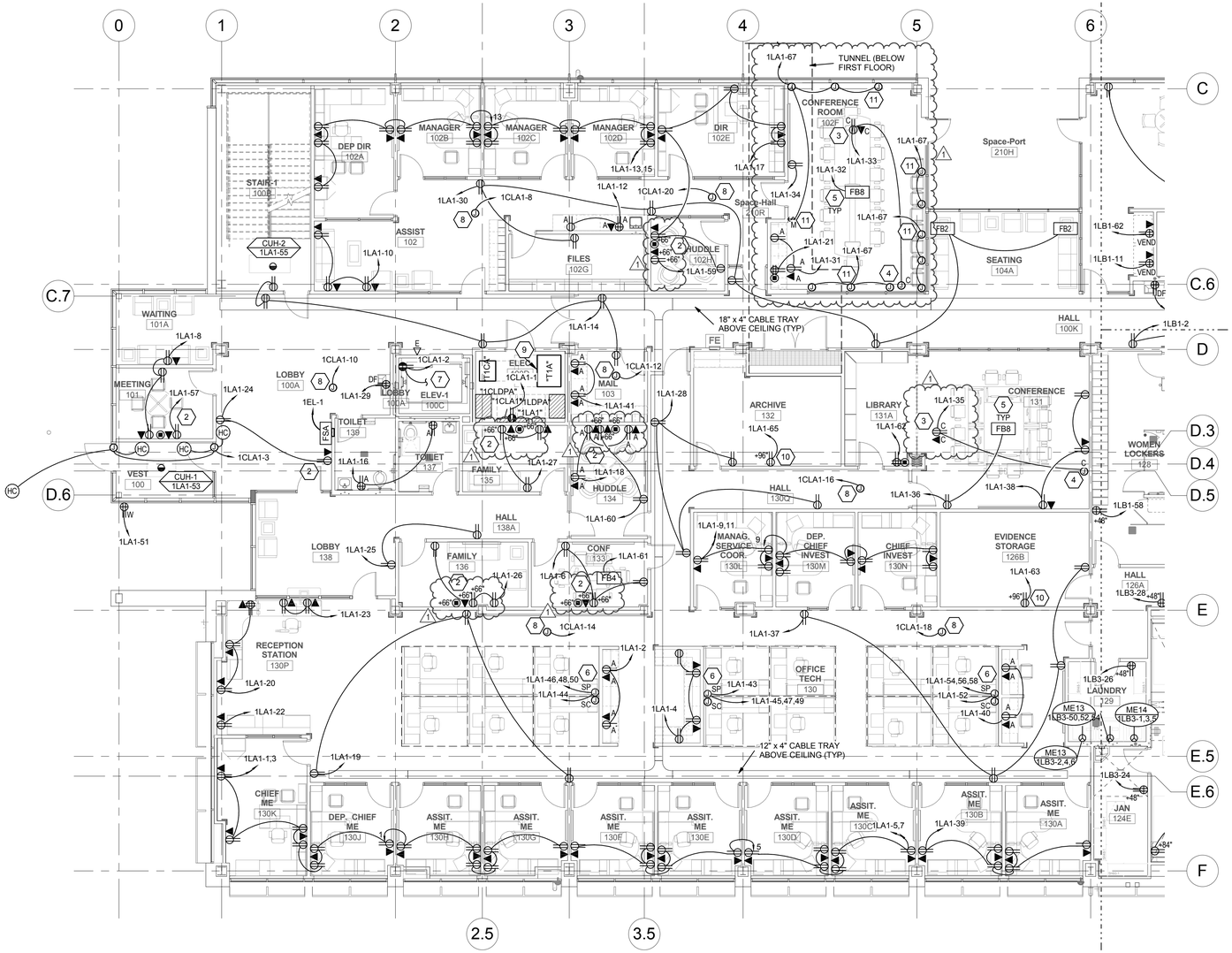

A1 FIRST LEVEL POWER PLAN - AREA A

SCALE: 1/8" = 1'-0"

GENERAL SHEET NOTES

1. LOCATIONS OF MECHANICAL EQUIPMENT SHOWN IS APPROXIMATE. FIELD COORDINATE EXACT LOCATIONS OF EQUIPMENT PRIOR TO ROUGH-IN.
2. SEE FIRE ALARM PLANS (FA) FOR ELECTRICAL CONNECTIONS TO FIRE ALARM EQUIPMENT/DEVICES.
3. PROVIDE WIRING FROM ALL REFRIGERATORS TO BMS SYSTEM TO MONITOR DRY CONTACTS ALARMS IN REFRIGERATOR.
4. MINIMUM BRANCH CIRCUIT CONDUCTOR SIZE FOR 20A, 120V OR 208V CIRCUITS SHALL BE #10 AWG, UNLESS A LARGER SIZE IS INDICATED OR REQUIRED TO MINIMIZE VOLTAGE DROP.
5. CONTRACTOR TO PROVIDE AT TIME OF OWNER MOVE-IN/OCCUPATION OF BUILDING, (20) NEMA PLUG CONVERSION/REVISIONS TO ACCOMMODATE DIFFERENT EQUIPMENT PLUGS. THIS QUANTITY IS A TOTAL FOR THE BUILDING AND NOT PER DRAWING SHEET.

SHEET KEYNOTES

1. INSTALL GFCI IN PROVIDED SINGLE GANG BOX AND RACEWAY IN AUTOPSY BACKDRAFT STATION.
2. POWER AND DATA FOR WALL MOUNTED T.V. COORDINATE WITH A/V ROUGH-IN DETAILS.
3. POWER AND DATA FOR CEILING MOUNTED PROJECTOR. PROVIDE ALL ELECTRICAL AND CONTROL CONDUIT AND WIRING PER MANUFACTURER'S INSTRUCTIONS. INSTALL CONTROL SWITCH IN LOCATION APPROVED BY ARCHITECT. ALSO COORDINATE WITH AV INSTALLER AND INTERFACE WITH AV CONTROLS.
4. POWER FOR MOTORIZED SCREEN. PROVIDE ALL ELECTRICAL & CONTROL CONDUIT AND WIRING PER MANUFACTURER'S WRITTEN INSTRUCTIONS. INSTALL CONTROL SWITCH IN LOCATION APPROVED BY ARCHITECT. ALSO COORDINATE WITH AV INSTALLER AND INTERFACE WITH AV CONTROLS.
5. COORDINATE LOCATION OF FLOOR BOX WITH FURNITURE LAYOUT SHOWN ON ARCHITECTURAL DRAWINGS PRIOR TO ROUGH-IN.
6. PROVIDE ELECTRICAL CONNECTIONS TO SYSTEMS FURNITURE. DESIGN IS BASED ON 4 CIRCUIT/8 WIRE SYSTEM (3 CIRCUITS, SHARED OVERSIZED NEUTRAL AND GROUND, PLUS 1 CIRCUIT WITH DEDICATED NEUTRAL AND GROUND). VERIFY WIRING CONFIGURATION AND FEED POINT WITH SYSTEMS FURNITURE INSTALLER PRIOR TO INSTALLATION. COORDINATE WITH FURNITURE INSTALLER SUCH THAT CIRCUITS ARE UNIFORMLY DISTRIBUTED TO NO MORE THAN 4 WORKSTATIONS PER CIRCUIT AND EACH WORKSTATION ONLY HAVING AVAILABLE IT'S ASSIGNED CIRCUIT. COPIER OR PRINTERS LOCATED IN A GROUP OF WORKSTATIONS SHALL RECEIVE A DEDICATED CIRCUIT.
7. CIRCUIT ELEVATOR PIT LIGHT TO SAME CIRCUIT AS THE ELEVATOR PIT RECEPTACLE.
8. PROVIDE J-BOX FOR MECHANICAL CONTROL CIRCUITS. COORDINATE EXACT LOCATION WITH CONTROL CONTRACTOR PRIOR TO ROUGH-IN.
9. RELOCATE/REUSE EXISTING 300 KVA TRANSFORMER FROM A PREVIOUS PROJECT. RELABEL TRANSFORMER AS "T1A". SEE A2/EP101D.
10. PROVIDE OUTLET FOR SPACESAVER. FINAL OUTLET LOCATION TO BE COORDINATED WITH ARCHITECT.
11. J-BOX FOR MOTORIZED SHADES POWER CONNECTIONS. PROVIDE POWER AND CONTROL WIRING PER MANUFACTURER WRITTEN INSTRUCTIONS. PROVIDE 2-GANG BOX WITH SINGLE MUD RING FOR SHADE CONTROL SWITCH. COORDINATE POWER AND SWITCH LOCATION WITH SHADE INSTALLER AND ARCHITECT PRIOR TO ROUGH-IN.

KEY PLAN

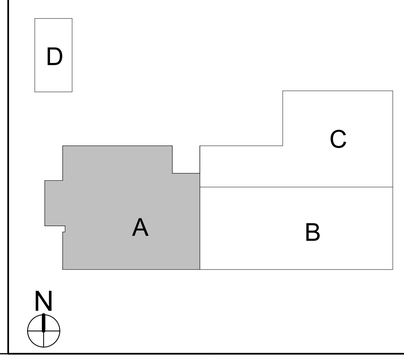

CRSA
649 E. South Temple
Salt Lake City, UT 84102
801.355.5915

MWL
11798 N. Lakeridge Pkwy.
Ashland, VA 23005
804-228-7473

State of Utah
Department of Administrative Services
Division of Facilities Construction & Management
4110 State Office Building
Salt Lake City, Utah 84114
Phone: (801) 538 - 3018
Fax: (801) 538 - 3267

DFCM APPROVAL STAMP

LICENSED PROFESSIONAL ENGINEER
No. 181563
DAVID E. WESEMANN
04-21-2014
STATE OF UTAH

ARCHITECT-ENGINEER STAMP

Unified State Laboratory Module 2

4451 South 2700 West, Taylorsville, UT 84118

DFCM #:	13020300
Project #:	B13-024

DATE:	ISSUE TYPE:
April 21, 2014	BID SET

MARK	DATE	DESCRIPTION
1	May 8, 2015	ADDENDUM #1

CHECKED BY	D. WESEMANN
DRAWN BY	DLM

FIRST LEVEL POWER PLAN - AREA A

EP101a

VOLUME 2

C:\Users\dlm\Documents\2013\3362\Elec-Central_DLM (84432).rvt
5/7/2015 5:24:47 PM

GENERAL SHEET NOTES

1. LOCATIONS OF MECHANICAL EQUIPMENT SHOWN IS APPROXIMATE. FIELD COORDINATE EXACT LOCATIONS OF EQUIPMENT PRIOR TO ROUGH-IN.
2. SEE FIRE ALARM PLANS (FA) FOR ELECTRICAL CONNECTIONS TO FIRE ALARM EQUIPMENT/DEVICES.
3. PROVIDE WIRING FROM ALL REFRIGERATORS TO BMS SYSTEM TO MONITOR DRY CONTACTS ALARMS IN REFRIGERATOR.
4. MINIMUM BRANCH CIRCUIT CONDUCTOR SIZE FOR 20A, 120V OR 208V CIRCUITS SHALL BE #10 AWG, UNLESS A LARGER SIZE IS INDICATED OR REQUIRED TO MINIMIZE VOLTAGE DROP.
5. CONTRACTOR TO PROVIDE AT TIME OF OWNER MOVE-IN/OCCUPATION OF BUILDING, (20) NEMA PLUG CONVERSION/REVISIONS TO ACCOMMODATE DIFFERENT EQUIPMENT PLUGS. THIS QUANTITY IS A TOTAL FOR THE BUILDING AND NOT PER DRAWING SHEET.

SHEET KEYNOTES

1. INSTALL GFCI IN PROVIDED SINGLE GANG BOX AND RACEWAY IN AUTOPSY BACKDRAFT STATION.
2. PROVIDE POWER FOR AUTOMATIC SLIDING DOOR. COORDINATE WITH ARCHITECT EXACT LOCATION OF J-BOX AND POWER CONNECTION, FOR SLIDING DOOR, PRIOR TO ROUGH-IN.
3. POWER AND DATA FOR WALL MOUNTED T.V. COORDINATE WITH A/V ROUGH-IN DETAILS.
4. POWER FOR MOTORIZED SCREEN. PROVIDE ALL ELECTRICAL & CONTROL CONDUIT AND WIRING PER MANUFACTURER'S WRITTEN INSTRUCTIONS. INSTALL CONTROL SWITCH IN LOCATION APPROVED BY ARCHITECT. ALSO COORDINATE WITH AV INSTALLER AND INTERFACE WITH AV CONTROLS.
5. PROVIDE 3/4" CND IN WALL FROM SCALE INDICATOR J-BOX THROUGH SCALE PIT METAL FRAME FOR LOAD CELL CABLE.
6. RECEPTACLE OUTLET FOR IRRIGATION CONTROLLER. PROVIDE 2" CND FROM DFCM STORAGE ROOM #116 TO APPROXIMATE LOCATION SHOWN ON ES102.
7. CIRCUIT ELEVATOR PIT LIGHT TO SAME CIRCUIT AS THE ELEVATOR PIT RECEPTACLE.
8. PROVIDE J-BOX FOR MECHANICAL CONTROL CIRCUITS. COORDINATE EXACT LOCATION WITH CONTROL CONTRACTOR PRIOR TO ROUGH-IN.
9. CEILING DATA OUTLET FOR PTZ DOCUMENT CAMERA. COORDINATE EXACT LOCATION WITH AV INSTALLER/OWNER/ARCHITECT PRIOR TO ROUGH-IN.

SHEET KEYNOTES

10. PROVIDE OUTLET FOR SPACESAVER. FINAL OUTLET LOCATION TO BE COORDINATED WITH ARCHITECT.

KEY PLAN

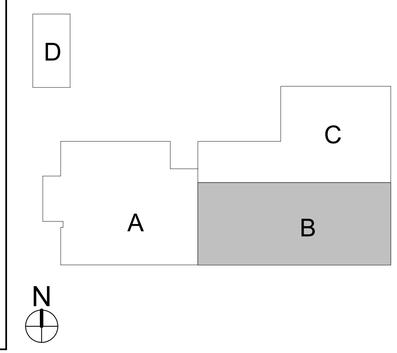

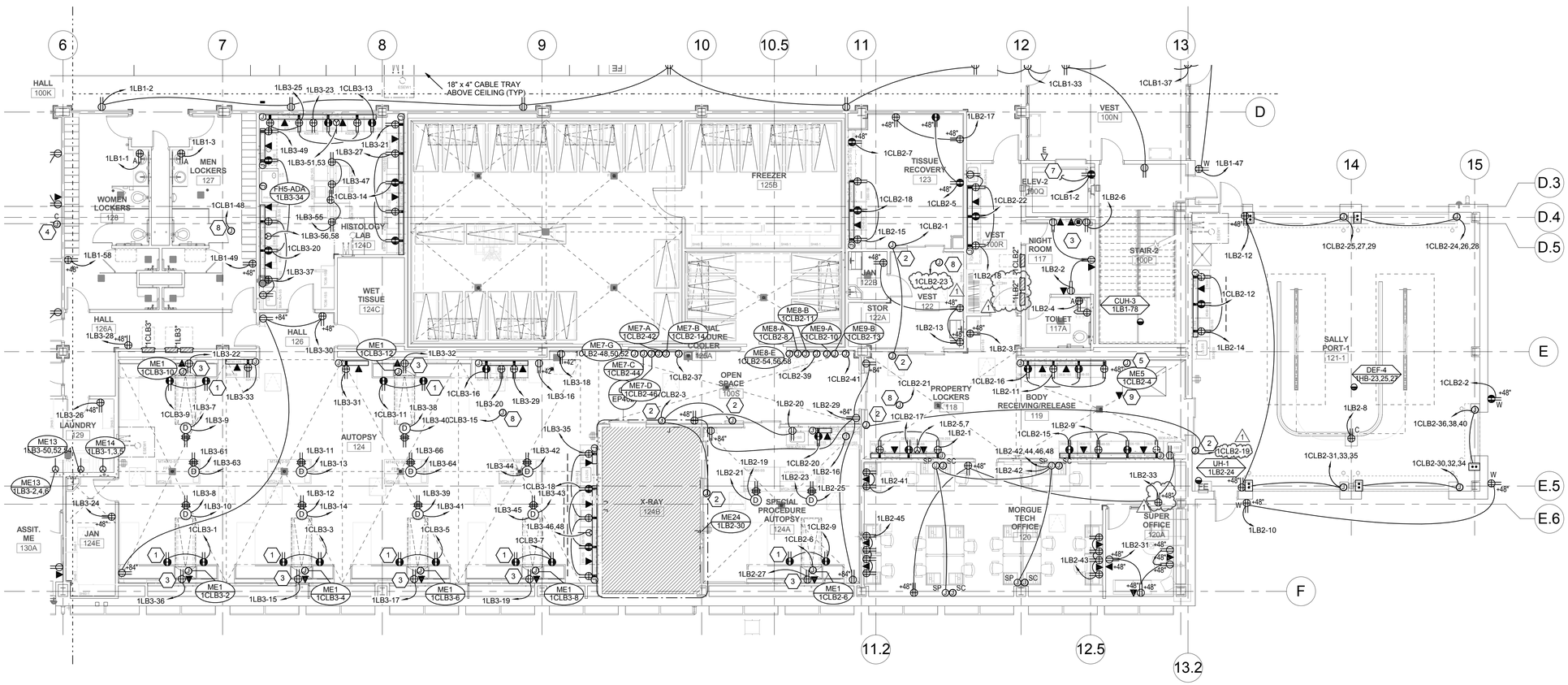

A1 FIRST LEVEL POWER PLAN - AREA B

SCALE: 1/8" = 1'-0"

C:\Users\dlm\Documents\2013\3502\Elec-Central_DLM (8432).rvt
5/7/2015 5:24:57 PM

CRSA
649 E. South Temple
Salt Lake City, UT 84102
801.355.5915

MWL
11798 N. Lakeridge Pkwy.
Ashland, VA 23005
804-228-7473

State of Utah
Department of Administrative Services
Division of Facilities Construction & Management
4110 State Office Building
Salt Lake City, Utah 84114
Phone: (801) 538 - 3018
Fax: (801) 538 - 3267

DFCM APPROVAL STAMP

LICENSED PROFESSIONAL ENGINEER No. 181563 DAVID E. WESEMANN 04-21-2014 STATE OF UTAH

ARCHITECT-ENGINEER STAMP

Unified State Laboratory Module 2

4451 South 2700 West, Taylorsville, UT 84118

DFCM #:	13020300
Project #:	B13-024

DATE:	ISSUE TYPE:
April 21, 2014	BID SET

MARK	DATE	DESCRIPTION
1	May 8, 2015	ADDENDUM #1

CHECKED BY	D. WESEMANN
DRAWN BY	DLM

FIRST LEVEL POWER PLAN - AREA B

EP101b

VOLUME 2

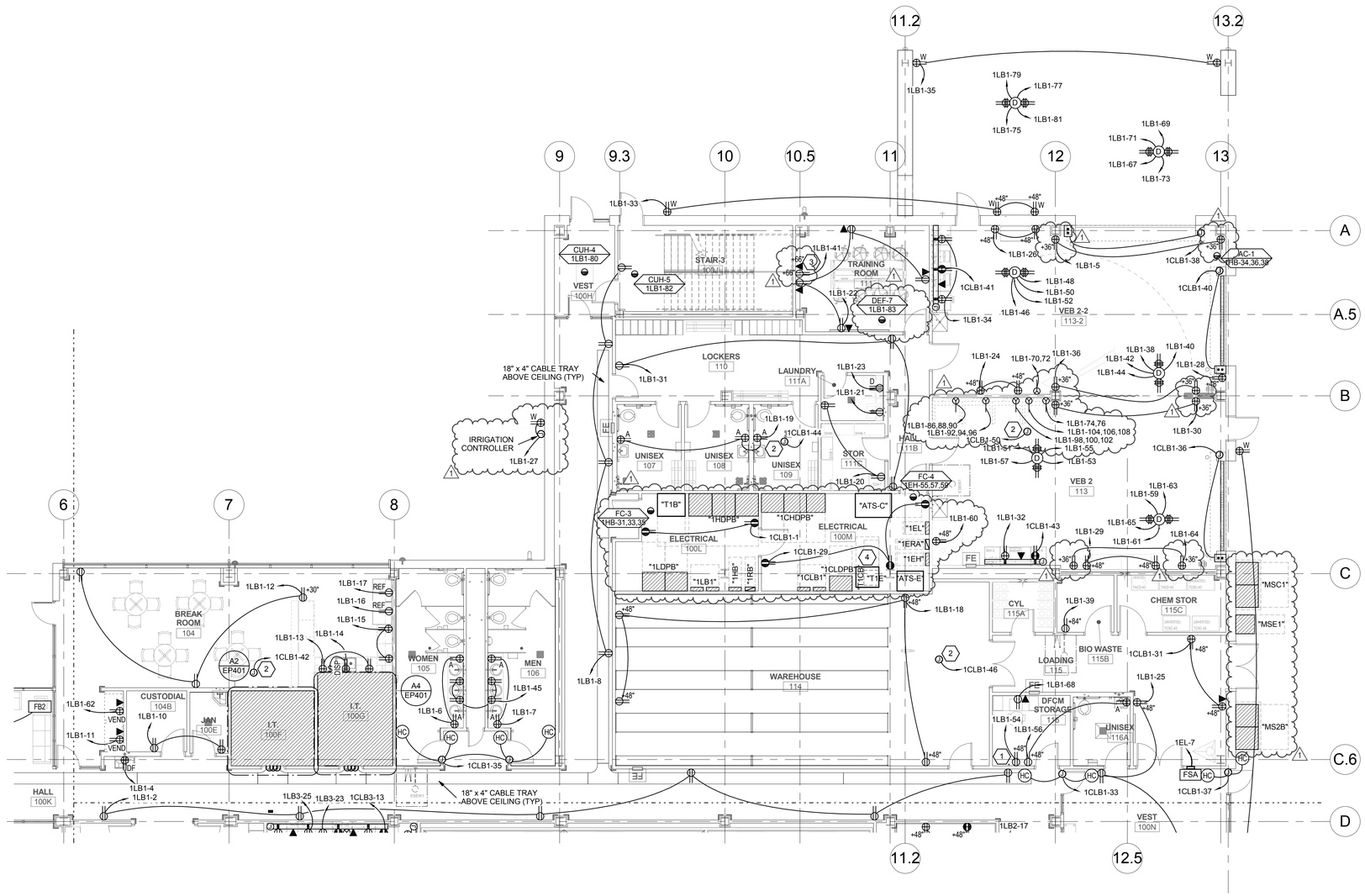

A1 FIRST LEVEL POWER PLAN - AREA C

SCALE: 1/8" = 1'-0"

GENERAL SHEET NOTES

1. LOCATIONS OF MECHANICAL EQUIPMENT SHOWN IS APPROXIMATE. FIELD COORDINATE EXACT LOCATIONS OF EQUIPMENT PRIOR TO ROUGH-IN.
2. SEE FIRE ALARM PLANS (FA) FOR ELECTRICAL CONNECTIONS TO FIRE ALARM EQUIPMENT/DEVICES.
3. PROVIDE WIRING FROM ALL REFRIGERATORS TO BMS SYSTEM TO MONITOR DRY CONTACTS ALARMS IN REFRIGERATOR.
4. MINIMUM BRANCH CIRCUIT CONDUCTOR SIZE FOR 20A, 120V OR 208V CIRCUITS SHALL BE #10 AWG, UNLESS A LARGER SIZE IS INDICATED OR REQUIRED TO MINIMIZE VOLTAGE DROP.
5. CONTRACTOR TO PROVIDE AT TIME OF OWNER MOVE-IN/OCCUPATION OF BUILDING, (20) NEMA PLUG CONVERSION/REVISIONS TO ACCOMMODATE DIFFERENT EQUIPMENT PLUGS. THIS QUANTITY IS A TOTAL FOR THE BUILDING AND NOT PER DRAWING SHEET.

SHEET KEYNOTES

1. RECEPTACLE OUTLET FOR IRRIGATION CONTROLLER. PROVIDE 2" CND FROM DFCM STORAGE ROOM #116 TO APPROXIMATE LOCATION SHOWN ON ES102.
2. PROVIDE J-BOX FOR MECHANICAL CONTROL CIRCUITS. COORDINATE EXACT LOCATION WITH CONTROL CONTRACTOR PRIOR TO ROUGH-IN.
3. POWER AND DATA FOR WALL MOUNTED T.V. COORDINATE WITH A/V ROUGH-IN DETAILS.
4. SUPPORT AND HANG TRANSFORMER "T1E" FROM BUILDING STRUCTURE.

KEY PLAN

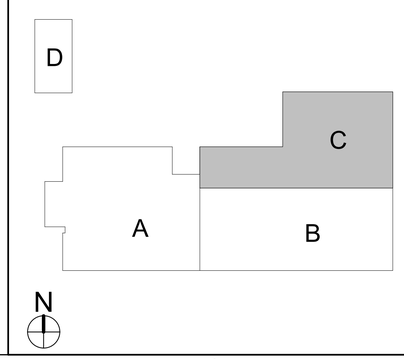

CRSA

649 E. South Temple
Salt Lake City, UT 84102
801.355.5915

MWL

11798 N. Lakeridge Pkwy.
Ashland, VA 23005
804-228-7473

State of Utah
Department of Administrative Services

Division of Facilities Construction & Management
4110 State Office Building
Salt Lake City, Utah 84114
Phone: (801) 538 - 3018
Fax: (801) 538 - 3267

DFCM APPROVAL STAMP

No. 181563
DAVID E. WESEMANN
04-21-2014
STATE OF UTAH
LICENSED PROFESSIONAL ENGINEER

ARCHITECT-ENGINEER STAMP

Unified State Laboratory Module 2

4451 South 2700 West, Taylorsville, UT 84118

DFCM #:	13020300
Project #:	B13-024

DATE:	ISSUE TYPE:
April 21, 2014	BID SET

MARK	DATE	DESCRIPTION
1	May 8, 2015	ADDENDUM #1

CHECKED BY	D. WESEMANN
DRAWN BY	DLM

FIRST LEVEL POWER PLAN - AREA C

EP101c

VOLUME 2

C:\Users\dlm\Documents\2013362Elec-Central_DLM (8432).rvt
5/7/2015 5:25:06 PM

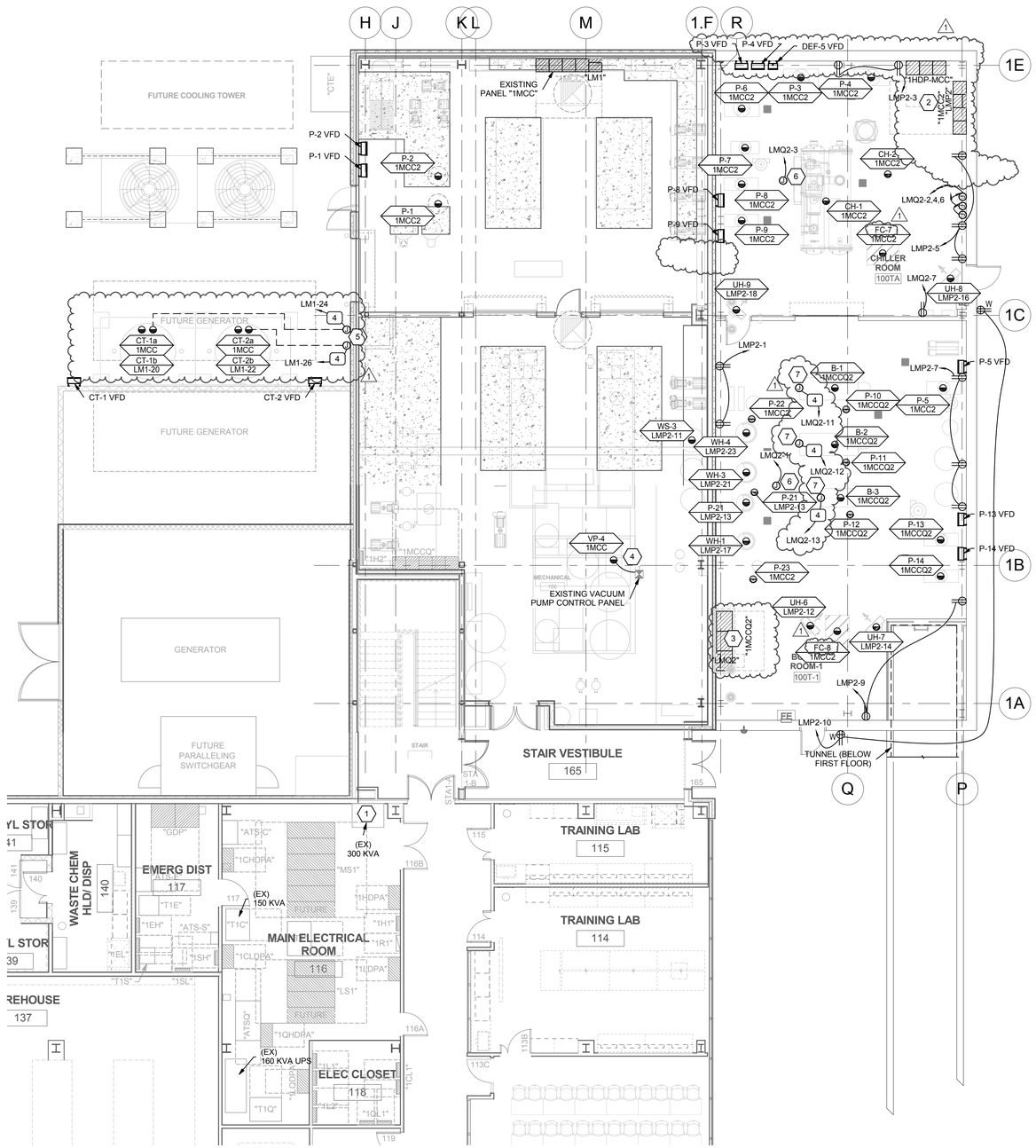

A2 FIRST LEVEL POWER PLAN - AREA D

SCALE: 1/8" = 1'-0"

GENERAL SHEET NOTES

1. LOCATIONS OF MECHANICAL EQUIPMENT SHOWN IS APPROXIMATE. FIELD COORDINATE EXACT LOCATIONS OF EQUIPMENT PRIOR TO ROUGH-IN.
2. SEE FIRE ALARM PLANS (FA) FOR ELECTRICAL CONNECTIONS TO FIRE ALARM EQUIPMENT/DEVICES.
3. PROVIDE WIRING FROM ALL REFRIGERATORS TO BMS SYSTEM TO MONITOR DRY CONTACTS ALARMS IN REFRIGERATOR.
4. MINIMUM BRANCH CIRCUIT CONDUCTOR SIZE FOR 20A, 120V OR 208V CIRCUITS SHALL BE #10 AWG, UNLESS A LARGER SIZE IS INDICATED OR REQUIRED TO MINIMIZE VOLTAGE DROP.
5. CONTRACTOR TO PROVIDE AT TIME OF OWNER MOVE-IN/OCCUPATION OF BUILDING, (20) NEMA PLUG CONVERSION/REVISIONS TO ACCOMMODATE DIFFERENT EQUIPMENT PLUGS. THIS QUANTITY IS A TOTAL FOR THE BUILDING AND NOT PER DRAWING SHEET.

SHEET KEYNOTES

1. EXISTING 300 KVA TRANSFORMER WAS REMOVED AND STORED IN THIS LOCATION FROM A PREVIOUS PROJECT. RELOCATE/REUSE TRANSFORMER AS INDICATED IN DRAWINGS. RELABEL TRANSFORMER AS "T1A". SEE A1/EP101A AND A1/EP601.
2. TRANSFORMER MCCT2 AND PANEL LM2 LOCATED INSIDE OF 1MCC2.
3. TRANSFORMER MCCQ2T AND PANEL LMQ2 LOCATED INSIDE OF 1MCCQ2.
4. PROVIDE CONNECTION TO VP-4 FROM EXISTING MOTOR CONTROL CENTER "1MCC" THROUGH EXISTING VACUUM PUMP CONTROL PANEL. SEE ONE-LINE AND MECHANICAL EQUIPMENT SCHEDULE FOR ADDITONAL INFORMATION.
5. PROVIDE HEAT TRACE FOR COOLING TOWER PIPES.
6. PROVIDE J-BOX FOR MECHANICAL CONTROL CIRCUITS. COORDINATE EXACT LOCATION WITH CONTROL CONTRACTOR PRIOR TO ROUGH-IN.
7. BOILER CONTROL CIRCUIT.

KEY PLAN

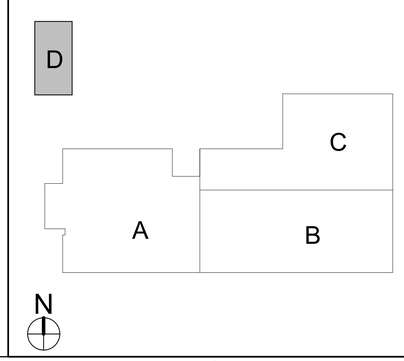

CRSA

649 E. South Temple
Salt Lake City, UT 84102
801.355.5915

MWL

11798 N. Lakeridge Pkwy.
Ashland, VA 23005
804-228-7473

State of Utah
Department of Administrative Services
Division of Facilities Construction & Management
4110 State Office Building
Salt Lake City, Utah 84114
Phone: (801) 538 - 3018
Fax: (801) 538 - 3267

DFCM APPROVAL STAMP

ARCHITECT-ENGINEER STAMP

No. 181563
DAVID E. WESEMANN
04-21-2014
LICENSED PROFESSIONAL ENGINEER
STATE OF UTAH

Unified State Laboratory Module 2

4451 South 2700 West, Taylorsville, UT 84118

DFCM #:	13020300
Project #:	B13-024
DATE: April 21, 2014	ISSUE TYPE: BID SET

MARK	DATE	DESCRIPTION
1	May 8, 2015	ADDENDUM #1

CHECKED BY	D. WESEMANN
DRAWN BY	DLM

FIRST LEVEL POWER PLAN - AREA D

EP101d

VOLUME 2

C:\Users\dlm\Documents\2013032\Elec Central_DLM (84320).rvt
5/7/2015 5:25:15 PM

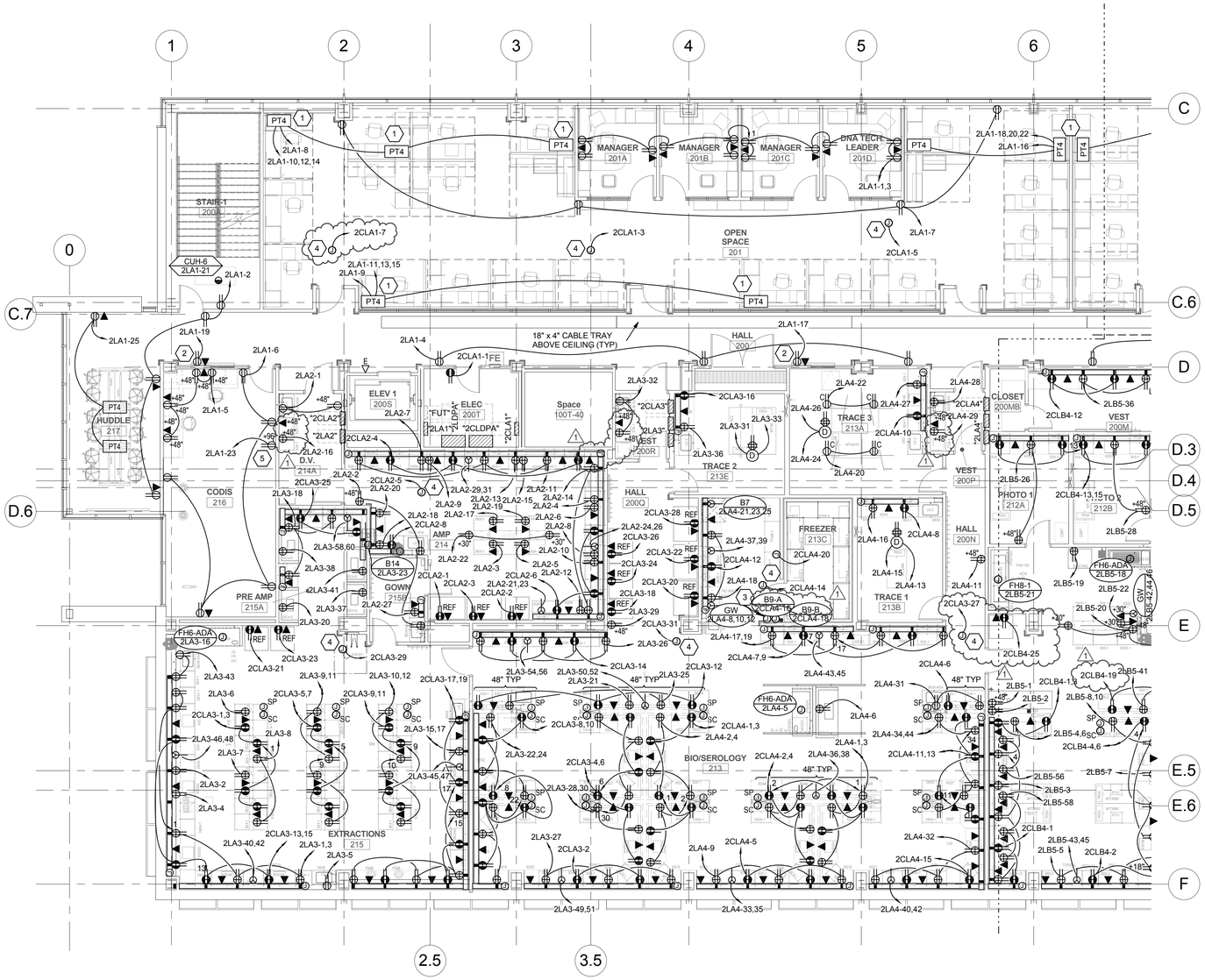

A1 SECOND LEVEL POWER PLAN - AREA A

SCALE: 1/8" = 1'-0"

GENERAL SHEET NOTES

1. LOCATIONS OF MECHANICAL EQUIPMENT SHOWN IS APPROXIMATE. FIELD COORDINATE EXACT LOCATIONS OF EQUIPMENT PRIOR TO ROUGH-IN.
2. SEE FIRE ALARM PLANS (FA) FOR ELECTRICAL CONNECTIONS TO FIRE ALARM EQUIPMENT/DEVICES.
3. PROVIDE WIRING FROM ALL REFRIGERATORS TO BMS SYSTEM TO MONITOR DRY CONTACTS ALARMS IN REFRIGERATOR.
4. MINIMUM BRANCH CIRCUIT CONDUCTOR SIZE FOR 20A, 120V OR 208V CIRCUITS SHALL BE #10 AWG, UNLESS A LARGER SIZE IS INDICATED OR REQUIRED TO MINIMIZE VOLTAGE DROP.
5. CONTRACTOR TO PROVIDE AT TIME OF OWNER MOVE-IN/OCCUPATION OF BUILDING, (20) NEMA PLUG CONVERSION/REVISIONS TO ACCOMMODATE DIFFERENT EQUIPMENT PLUGS. THIS QUANTITY IS A TOTAL FOR THE BUILDING AND NOT PER DRAWING SHEET.

SHEET KEYNOTES

1. PROVIDE ELECTRICAL CONNECTIONS TO SYSTEMS FURNITURE. DESIGN IS BASED ON 4 CIRCUIT/8 WIRE SYSTEM (3 CIRCUITS, SHARED OVERSIZED NEUTRAL AND GROUND, PLUS 1 CIRCUIT WITH DEDICATED NEUTRAL AND GROUND). VERIFY WIRING CONFIGURATION AND FEED POINT WITH SYSTEMS FURNITURE INSTALLER PRIOR TO INSTALLATION. COORDINATE WITH FURNITURE INSTALLER SUCH THAT CIRCUITS ARE UNIFORMLY DISTRIBUTED TO NO MORE THAN 4 WORKSTATIONS PER CIRCUIT AND EACH WORKSTATION ONLY HAVING AVAILABLE IT'S ASSIGNED CIRCUIT. COPIER OR PRINTERS LOCATED IN A GROUP OF WORKSTATIONS SHALL RECEIVE A DEDICATED CIRCUIT.
2. POWER AND DATA FOR WALL MOUNTED T.V. COORDINATE WITH A/V ROUGH-IN DETAILS.
3. PROVIDE POWER TO FREEZER ROOM SINGLE POINT OF CONNECTION. REFER TO LAB EQUIPMENT SCHEDULE FOR CONDUIT AND CONDUCTOR REQUIREMENTS. COORDINATE EXACT LOCATION WITH FREEZER ROOM CONTRACTOR.
4. PROVIDE J-BOX FOR MECHANICAL CONTROL CIRCUITS. COORDINATE EXACT LOCATION WITH CONTROL CONTRACTOR PRIOR TO ROUGH-IN.
5. PROVIDE OUTLET FOR SPACESAVER. FINAL OUTLET LOCATION TO BE COORDINATED WITH ARCHITECT.

KEY PLAN

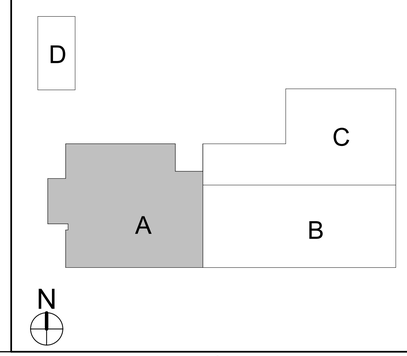

CRSA
649 E. South Temple
Salt Lake City, UT 84102
801.355.5915

MWL
11798 N. Lakeridge Pkwy.
Ashland, VA 23005
804-228-7473

State of Utah
Department of Administrative Services
Division of Facilities Construction & Management
4110 State Office Building
Salt Lake City, Utah 84114
Phone: (801) 538 - 3018
Fax: (801) 538 - 3267

DFCM APPROVAL STAMP

ARCHITECT-ENGINEER STAMP
No. 181563
DAVID E. WESEMANN
04-21-2014
STATE OF UTAH

Unified State Laboratory Module 2

4451 South 2700 West, Taylorsville, UT 84118

DFCM #:	13020300
Project #:	B13-024
DATE: April 21, 2014	ISSUE TYPE: BID SET

MARK	DATE	DESCRIPTION
1	May 8, 2015	ADDENDUM #1

CHECKED BY	D. WESEMANN
DRAWN BY	DLM

SECOND LEVEL POWER PLAN - AREA A

EP102a

VOLUME 2

C:\Users\dlm\Documents\2013\3622Elec-Central_DLM (8432).rvt
5/7/2015 5:25:25 PM

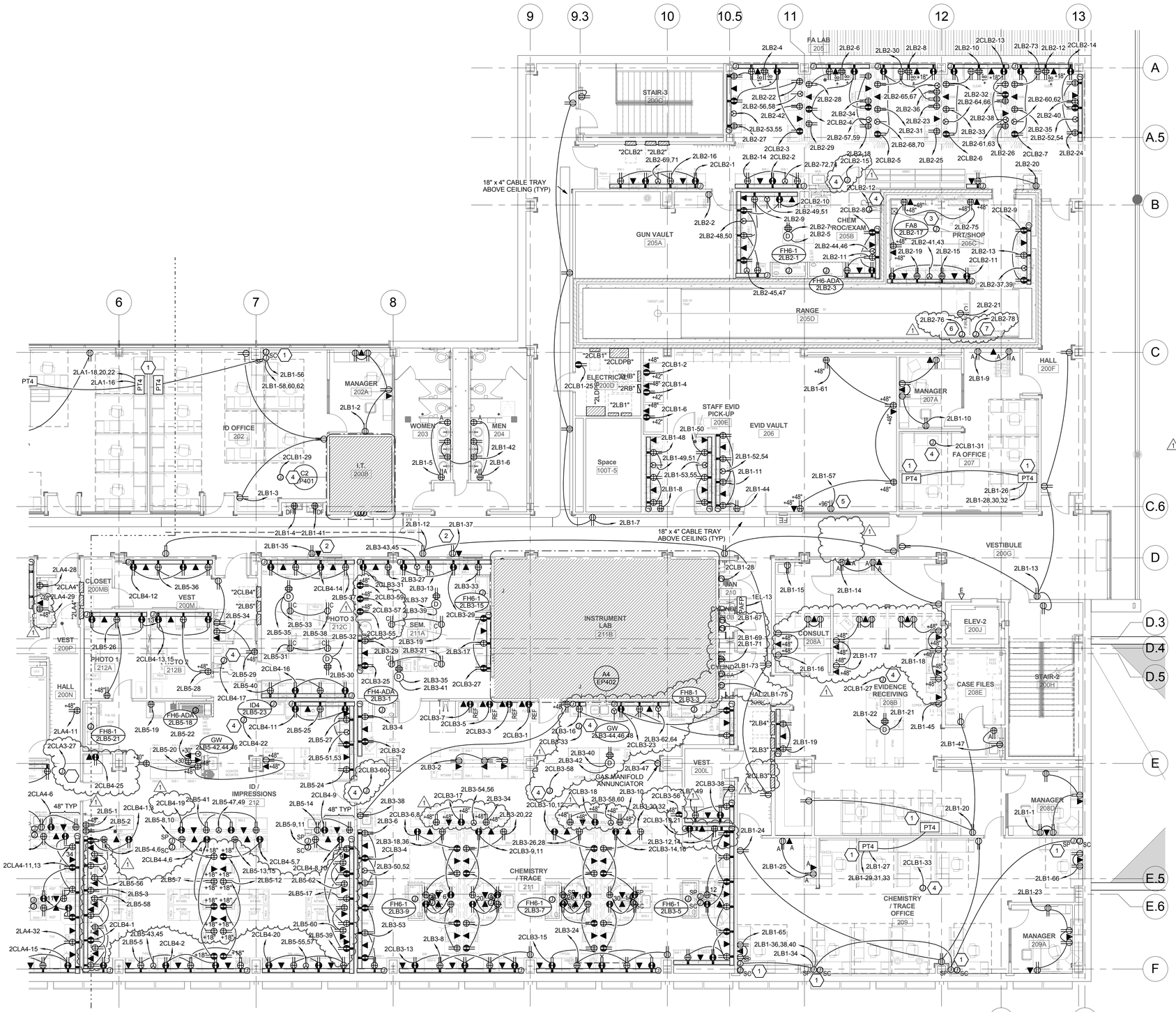

A1 SECOND LEVEL POWER PLAN - AREA B

SCALE: 1/8" = 1'-0"

GENERAL SHEET NOTES

1. LOCATIONS OF MECHANICAL EQUIPMENT SHOWN IS APPROXIMATE. FIELD COORDINATE EXACT LOCATIONS OF EQUIPMENT PRIOR TO ROUGH-IN.
2. SEE FIRE ALARM PLANS (FA) FOR ELECTRICAL CONNECTIONS TO FIRE ALARM EQUIPMENT/DEVICES.
3. PROVIDE WIRING FROM ALL REFRIGERATORS TO BMS SYSTEM TO MONITOR DRY CONTACTS ALARMS IN REFRIGERATOR.
4. MINIMUM BRANCH CIRCUIT CONDUCTOR SIZE FOR 20A, 120V OR 208V CIRCUITS SHALL BE #10 AWG, UNLESS A LARGER SIZE IS INDICATED OR REQUIRED TO MINIMIZE VOLTAGE DROP.
5. CONTRACTOR TO PROVIDE AT TIME OF OWNER MOVE-IN/OCCUPATION OF BUILDING, (20) NEMA PLUG CONVERSION/REVISIONS TO ACCOMMODATE DIFFERENT EQUIPMENT PLUGS. THIS QUANTITY IS A TOTAL FOR THE BUILDING AND NOT PER DRAWING SHEET.

SHEET KEYNOTES

1. PROVIDE ELECTRICAL CONNECTIONS TO SYSTEMS FURNITURE. DESIGN IS BASED ON 4 CIRCUIT/8 WIRE SYSTEM (3 CIRCUITS, SHARED OVERSIZED NEUTRAL AND GROUND, PLUS 1 CIRCUIT WITH DEDICATED NEUTRAL AND GROUND). VERIFY WIRING CONFIGURATION AND FEED POINT WITH SYSTEMS FURNITURE INSTALLER PRIOR TO INSTALLATION. COORDINATE WITH FURNITURE INSTALLER SUCH THAT CIRCUITS ARE UNIFORMLY DISTRIBUTED TO NO MORE THAN 4 WORKSTATIONS PER CIRCUIT AND EACH WORKSTATION ONLY HAVING AVAILABLE IT'S ASSIGNED CIRCUIT. COPIER OR PRINTERS LOCATED IN A GROUP OF WORKSTATIONS SHALL RECEIVE A DEDICATED CIRCUIT.
2. POWER AND DATA FOR WALL MOUNTED T.V. COORDINATE WITH A/V ROUGH-IN DETAILS.
3. DISCONNECT SHALL BE MOUNTED ON WALL ADJACENT TO THE SYSTEM ELECTRICAL PANEL AT BACK OF TANK.
4. PROVIDE J-BOX FOR MECHANICAL CONTROL CIRCUITS. COORDINATE EXACT LOCATION WITH CONTROL CONTRACTOR PRIOR TO ROUGH-IN.
5. PROVIDE OUTLET FOR SPACESAVER. FINAL OUTLET LOCATION TO BE COORDINATED WITH ARCHITECT.
6. PROVIDE POWER FOR FIRING RANGE HVAC CONTROLS. COORDINATE EXACT LOCATION AND REQUIREMENTS WITH FIRING RANGE HVAC INSTALLER PRIOR TO ROUGH-IN.
7. PROVIDE POWER FOR FIRING RANGE TARGET TROLLEY CONTROLS. COORDINATE EXACT LOCATION AND REQUIREMENTS WITH TARGET TROLLEY INSTALLER PRIOR TO ROUGH-IN.

KEY PLAN

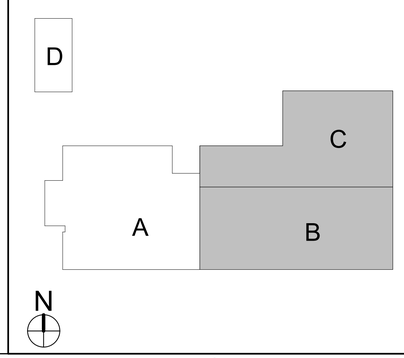

CRSA
649 E. South Temple
Salt Lake City, UT 84102
801.355.5915

MWL
11798 N. Lakeridge Pkwy.
Ashland, VA 23005
804-228-7473

State of Utah
Department of Administrative Services
Division of Facilities Construction & Management
4110 State Office Building
Salt Lake City, Utah 84114
Phone: (801) 538 - 3018
Fax: (801) 538 - 3267

DFCM APPROVAL STAMP

ARCHITECT-ENGINEER STAMP

No. 181563
DAVID E. WESEMANN
04-21-2014
STATE OF UTAH

Unified State Laboratory Module 2

4451 South 2700 West, Taylorsville, UT 84118

DFCM #:	13020300
Project #:	B13-024
DATE: April 21, 2014	ISSUE TYPE: BID SET

MARK	DATE	DESCRIPTION
1	May 8, 2015	ADDENDUM #1

CHECKED BY	D. WESEMANN
DRAWN BY	DLM

SECOND LEVEL POWER PLAN - AREA B

EP102b

VOLUME 2

C:\Users\dlm\Documents\2013\3502Elec Central_DLM (84432).rvt
5/7/2015 5:25:38 PM

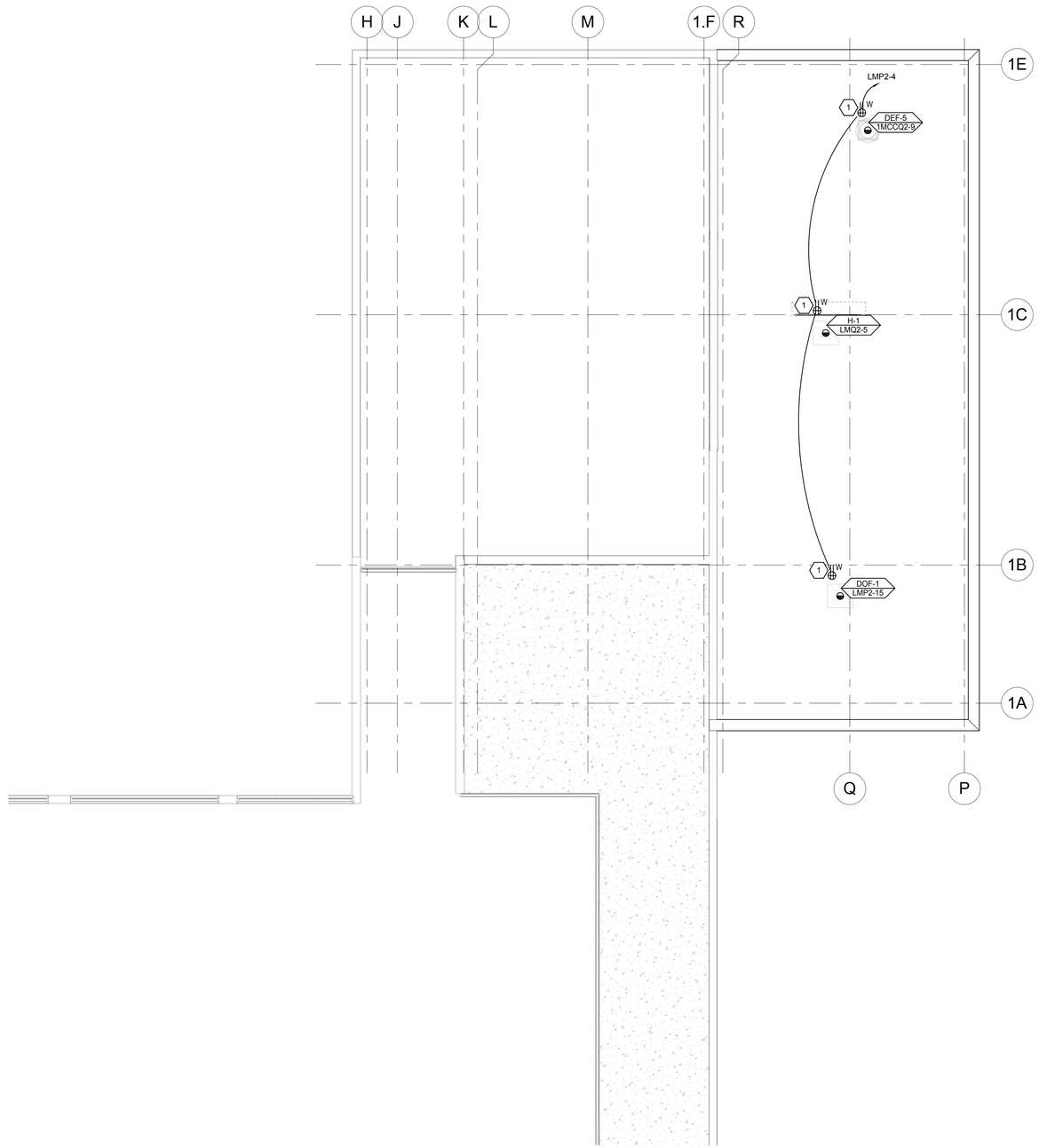

A2 SECOND LEVEL POWER PLAN - AREA D

SCALE: 1/8" = 1'-0"

GENERAL SHEET NOTES

1. LOCATIONS OF MECHANICAL EQUIPMENT SHOWN IS APPROXIMATE. FIELD COORDINATE EXACT LOCATIONS OF EQUIPMENT PRIOR TO ROUGH-IN.
2. SEE FIRE ALARM PLANS (FA) FOR ELECTRICAL CONNECTIONS TO FIRE ALARM EQUIPMENT/DEVICES.
3. PROVIDE WIRING FROM ALL REFRIGERATORS TO BMS SYSTEM TO MONITOR DRY CONTACTS ALARMS IN REFRIGERATOR.
4. MINIMUM BRANCH CIRCUIT CONDUCTOR SIZE FOR 20A, 120V OR 208V CIRCUITS SHALL BE #10 AWG, UNLESS A LARGER SIZE IS INDICATED OR REQUIRED TO MINIMIZE VOLTAGE DROP.
5. CONTRACTOR TO PROVIDE AT TIME OF OWNER MOVE-IN/OCCUPATION OF BUILDING, (20) NEMA PLUG CONVERSION/REVISIONS TO ACCOMMODATE DIFFERENT EQUIPMENT PLUGS. THIS QUANTITY IS A TOTAL FOR THE BUILDING AND NOT PER DRAWING SHEET.

SHEET KEYNOTES

1. ROOF MOUNTED OUTLET. PROVIDE INDEPENDENT UNISTRUT SUPPORT OR GRC CONDUIT FOR SUPPORT AND MOUNTING OF OUTLET.

KEY PLAN

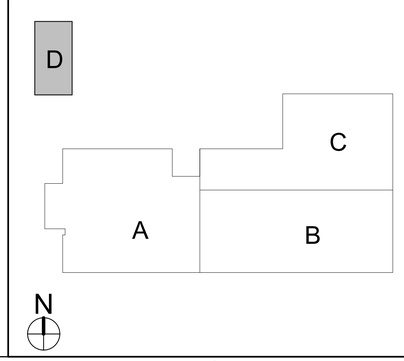

CRSA

649 E. South Temple
Salt Lake City, UT 84102
801.355.5915

MWL

11798 N. Lakeridge Pkwy.
Ashland, VA 23005
804-228-7473

State of Utah
Department of Administrative Services
Division of Facilities Construction & Management
DFCM
4110 State Office Building
Salt Lake City, Utah 84114
Phone: (801) 538 - 3018
Fax: (801) 538 - 3267

DFCM APPROVAL STAMP

LICENSED PROFESSIONAL ENGINEER
No. 181563
DAVID E. WESEMANN
04-21-2014
STATE OF UTAH

ARCHITECT-ENGINEER STAMP

Unified State Laboratory Module 2

4451 South 2700 West, Taylorsville, UT 84118

DFCM #:	13020300
Project #:	B13-024

DATE:	ISSUE TYPE:
April 21, 2014	BID SET

MARK	DATE	DESCRIPTION
1	May 8, 2015	ADDENDUM #1

CHECKED BY	D. WESEMANN
DRAWN BY	DLM

SECOND LEVEL POWER PLAN - AREA D

EP102d

VOLUME 2

C:\Users\dlm\Documents\2013035\Elec-Central_DLM (8432).rvt
5/7/2015 5:25:43 PM

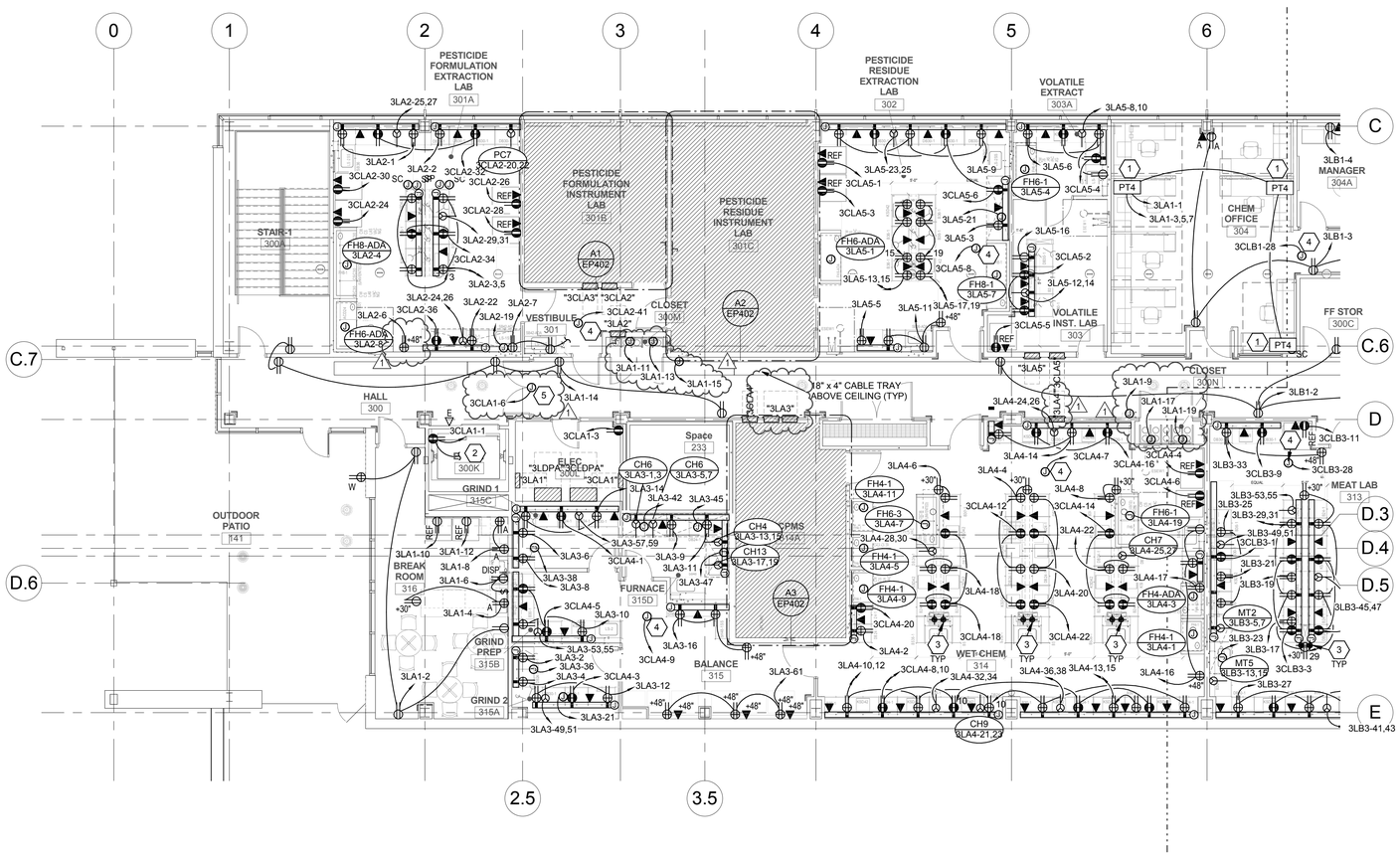

A1 THIRD LEVEL POWER PLAN - AREA A

SCALE: 1/8" = 1'-0"

GENERAL SHEET NOTES

1. LOCATIONS OF MECHANICAL EQUIPMENT SHOWN IS APPROXIMATE. FIELD COORDINATE EXACT LOCATIONS OF EQUIPMENT PRIOR TO ROUGH-IN.
2. SEE FIRE ALARM PLANS (FA) FOR ELECTRICAL CONNECTIONS TO FIRE ALARM EQUIPMENT/DEVICES.
3. PROVIDE WIRING FROM ALL REFRIGERATORS TO BMS SYSTEM TO MONITOR DRY CONTACTS ALARMS IN REFRIGERATOR.
4. MINIMUM BRANCH CIRCUIT CONDUCTOR SIZE FOR 20A, 120V OR 208V CIRCUITS SHALL BE #10 AWG, UNLESS A LARGER SIZE IS INDICATED OR REQUIRED TO MINIMIZE VOLTAGE DROP.
5. CONTRACTOR TO PROVIDE AT TIME OF OWNER MOVE-IN/OCCUPATION OF BUILDING, (20) NEMA PLUG CONVERSION/REVISIONS TO ACCOMMODATE DIFFERENT EQUIPMENT PLUGS. THIS QUANTITY IS A TOTAL FOR THE BUILDING AND NOT PER DRAWING SHEET.

SHEET KEYNOTES

1. PROVIDE ELECTRICAL CONNECTIONS TO SYSTEMS FURNITURE. DESIGN IS BASED ON 4 CIRCUIT/8 WIRE SYSTEM (3 CIRCUITS, SHARED OVERSIZED NEUTRAL AND GROUND, PLUS 1 CIRCUIT WITH DEDICATED NEUTRAL AND GROUND). VERIFY WIRING CONFIGURATION AND FEED POINT WITH SYSTEMS FURNITURE INSTALLER PRIOR TO INSTALLATION. COORDINATE WITH FURNITURE INSTALLER SUCH THAT CIRCUITS ARE UNIFORMLY DISTRIBUTED TO NO MORE THAN 4 WORKSTATIONS PER CIRCUIT AND EACH WORKSTATION ONLY HAVING AVAILABLE IT'S ASSIGNED CIRCUIT. COPIER OR PRINTERS LOCATED IN A GROUP OF WORKSTATIONS SHALL RECEIVE A DEDICATED CIRCUIT.
2. CIRCUIT ELEVATOR HOISTWAY LIGHT TO SAME CIRCUIT AS THE ELEVATOR HOISTWAY RECEPTACLE.
3. 1" CND STUBBED THROUGH SLAB TO NORMAL AND EMERGENCY POWER PANELS FEEDING THIS ROOM. 1.25" CND STUBBED THROUGH SLAB TO NEAREST I.T./TELECOMM ROOM ON THIS FLOOR.
4. PROVIDE J-BOX FOR MECHANICAL CONTROL CIRCUITS. COORDINATE EXACT LOCATION WITH CONTROL CONTRACTOR PRIOR TO ROUGH-IN.
5. CIRCUIT FOR 120V DOOR POWER SUPPLY. COORDINATE EXACT CONNECTION LOCATION WITH DOOR HARDWARE INSTALLER.

KEY PLAN

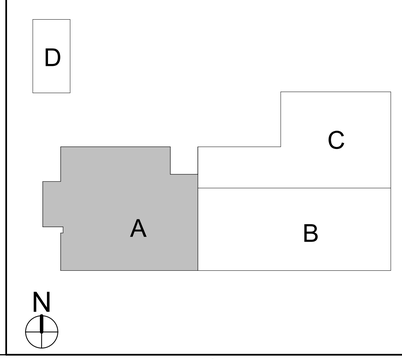

CRSA
649 E. South Temple
Salt Lake City, UT 84102
801.355.5915

MWL
11798 N. Lakeridge Pkwy.
Ashland, VA 23005
804-228-7473

State of Utah
Department of Administrative Services
Division of Facilities Construction & Management
4110 State Office Building
Salt Lake City, Utah 84114
Phone: (801) 538 - 3018
Fax: (801) 538 - 3267

DFCM APPROVAL STAMP

LICENSED PROFESSIONAL ENGINEER No. 181563 DAVID E. WESEMANN 04-21-2014 STATE OF UTAH

ARCHITECT-ENGINEER STAMP

Unified State Laboratory Module 2

4451 South 2700 West, Taylorsville, UT 84118

DFCM #: 13020300

Project #: B13-024

DATE:	ISSUE TYPE:
April 21, 2014	BID SET

MARK	DATE	DESCRIPTION
1	May 8, 2015	ADDENDUM #1

CHECKED BY: D. WESEMANN

DRAWN BY: DLM

THIRD LEVEL POWER PLAN - AREA A

EP103a

VOLUME 2

C:\Users\dlm\Documents\2013032\Elec Central_DLM (8452).rvt
5/7/2015 5:25:52 PM

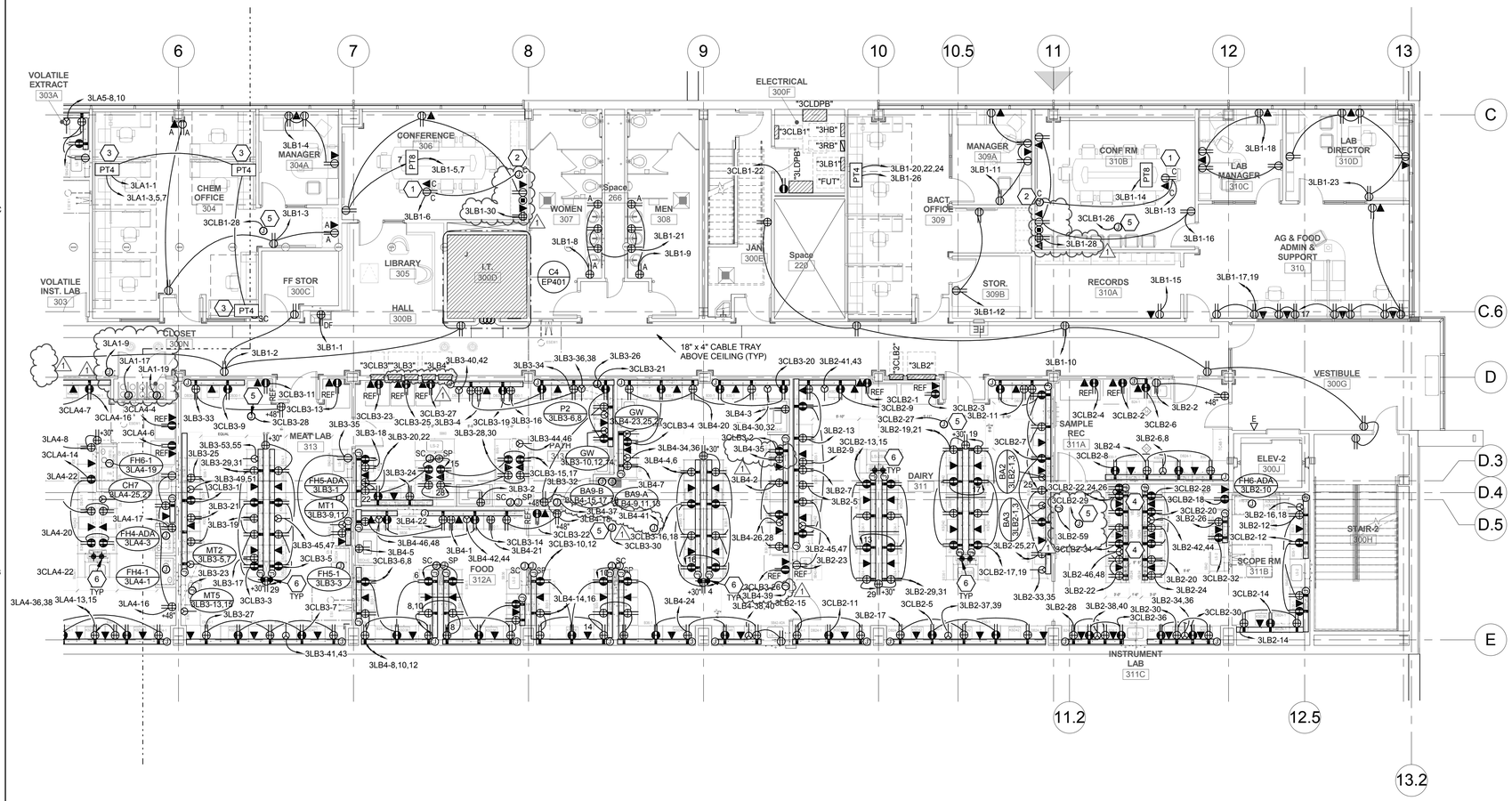

A1 THIRD LEVEL POWER PLAN - AREA B

SCALE: 1/8" = 1'-0"

GENERAL SHEET NOTES

1. LOCATIONS OF MECHANICAL EQUIPMENT SHOWN IS APPROXIMATE. FIELD COORDINATE EXACT LOCATIONS OF EQUIPMENT PRIOR TO ROUGH-IN.
2. SEE FIRE ALARM PLANS (FA) FOR ELECTRICAL CONNECTIONS TO FIRE ALARM EQUIPMENT/DEVICES.
3. PROVIDE WIRING FROM ALL REFRIGERATORS TO BMS SYSTEM TO MONITOR DRY CONTACTS ALARMS IN REFRIGERATOR.
4. MINIMUM BRANCH CIRCUIT CONDUCTOR SIZE FOR 20A, 120V OR 208V CIRCUITS SHALL BE #10 AWG, UNLESS A LARGER SIZE IS INDICATED OR REQUIRED TO MINIMIZE VOLTAGE DROP.
5. CONTRACTOR TO PROVIDE AT TIME OF OWNER MOVE-IN/OCCUPATION OF BUILDING, (20) NEMA PLUG CONVERSION/REVISIONS TO ACCOMMODATE DIFFERENT EQUIPMENT PLUGS. THIS QUANTITY IS A TOTAL FOR THE BUILDING AND NOT PER DRAWING SHEET.

SHEET KEYNOTES

1. POWER AND DATA FOR CEILING MOUNTED PROJECTOR. PROVIDE ALL ELECTRICAL AND CONTROL CONDUIT AND WIRING PER MANUFACTURER'S INSTRUCTIONS. INSTALL CONTROL SWITCH IN LOCATION APPROVED BY ARCHITECT. ALSO COORDINATE WITH AV INSTALLER AND INTERFACE WITH AV CONTROLS.
2. POWER FOR MOTORIZED SCREEN. PROVIDE ALL ELECTRICAL & CONTROL CONDUIT AND WIRING PER MANUFACTURER'S WRITTEN INSTRUCTIONS. INSTALL CONTROL SWITCH IN LOCATION APPROVED BY ARCHITECT. ALSO COORDINATE WITH AV INSTALLER AND INTERFACE WITH AV CONTROLS.
3. PROVIDE ELECTRICAL CONNECTIONS TO SYSTEMS FURNITURE. DESIGN IS BASED ON 4 CIRCUIT/8 WIRE SYSTEM (3 CIRCUITS, SHARED OVERSIZED NEUTRAL AND GROUND, PLUS 1 CIRCUIT WITH DEDICATED NEUTRAL AND GROUND). VERIFY WIRING CONFIGURATION AND FEED POINT WITH SYSTEMS FURNITURE INSTALLER PRIOR TO INSTALLATION. COORDINATE WITH FURNITURE INSTALLER SUCH THAT CIRCUITS ARE UNIFORMLY DISTRIBUTED TO NO MORE THAN 4 WORKSTATIONS PER CIRCUIT AND EACH WORKSTATION ONLY HAVING AVAILABLE IT'S ASSIGNED CIRCUIT. COPIER OR PRINTERS LOCATED IN A GROUP OF WORKSTATIONS SHALL RECEIVE A DEDICATED CIRCUIT.
4. COORDINATE PLACEMENT OF THIS RACEWAY AND ASSOCIATED ELECTRICAL RECEPTACLES AND CONNECTIONS WITH LAB EQUIPMENT INSTALLER, TO BE PLACED UNDERNEATH BACKSIDE OF LAB FURNITURE.
5. PROVIDE J-BOX FOR MECHANICAL CONTROL CIRCUITS. COORDINATE EXACT LOCATION WITH CONTROL CONTRACTOR PRIOR TO ROUGH-IN.
6. 1" CND STUBBED THROUGH SLAB TO NORMAL AND EMERGENCY POWER PANELS FEEDING THIS ROOM. 1.25" CND STUBBED THROUGH SLAB TO NEAREST I.T./TELECOMM ROOM ON THIS FLOOR.

KEY PLAN

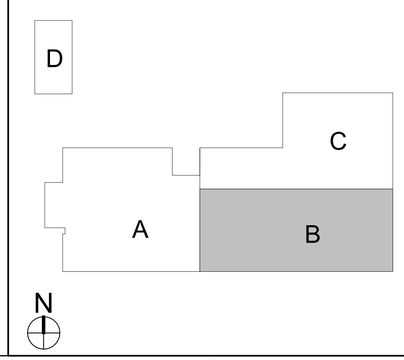

CRSA
649 E. South Temple
Salt Lake City, UT 84102
801.355.5915

MWL
11798 N. Lakeridge Pkwy.
Ashland, VA 23005
804-228-7473

State of Utah
Department of Administrative Services
Division of Facilities Construction & Management
4110 State Office Building
Salt Lake City, Utah 84114
Phone: (801) 538 - 3018
Fax: (801) 538 - 3267

DFCM APPROVAL STAMP

LICENSED PROFESSIONAL ENGINEER No. 181563 DAVID E. WESEMANN 04-21-2014 STATE OF UTAH

ARCHITECT-ENGINEER STAMP

Unified State Laboratory Module 2

4451 South 2700 West, Taylorsville, UT 84118

DFCM #: 13020300

Project #: B13-024

DATE:	ISSUE TYPE:
April 21, 2014	BID SET

MARK	DATE	DESCRIPTION
1	May 8, 2015	ADDENDUM #1

CHECKED BY: D. WESEMANN

DRAWN BY: DLM

THIRD LEVEL POWER PLAN - AREA B

EP103b

VOLUME 2

C:\Users\dlm\Documents\2013\3362\Elec Central_DLM (8432).rvt
5/7/2015 5:36:03 PM

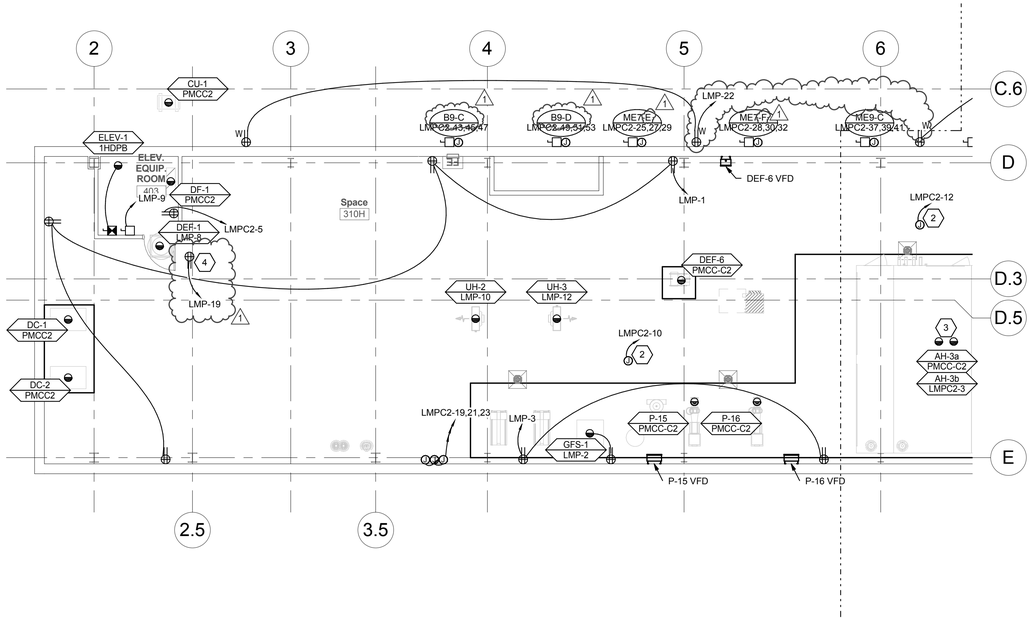

C1 PENTHOUSE LEVEL POWER PLAN - AREA A

SCALE: 1/8" = 1'-0"

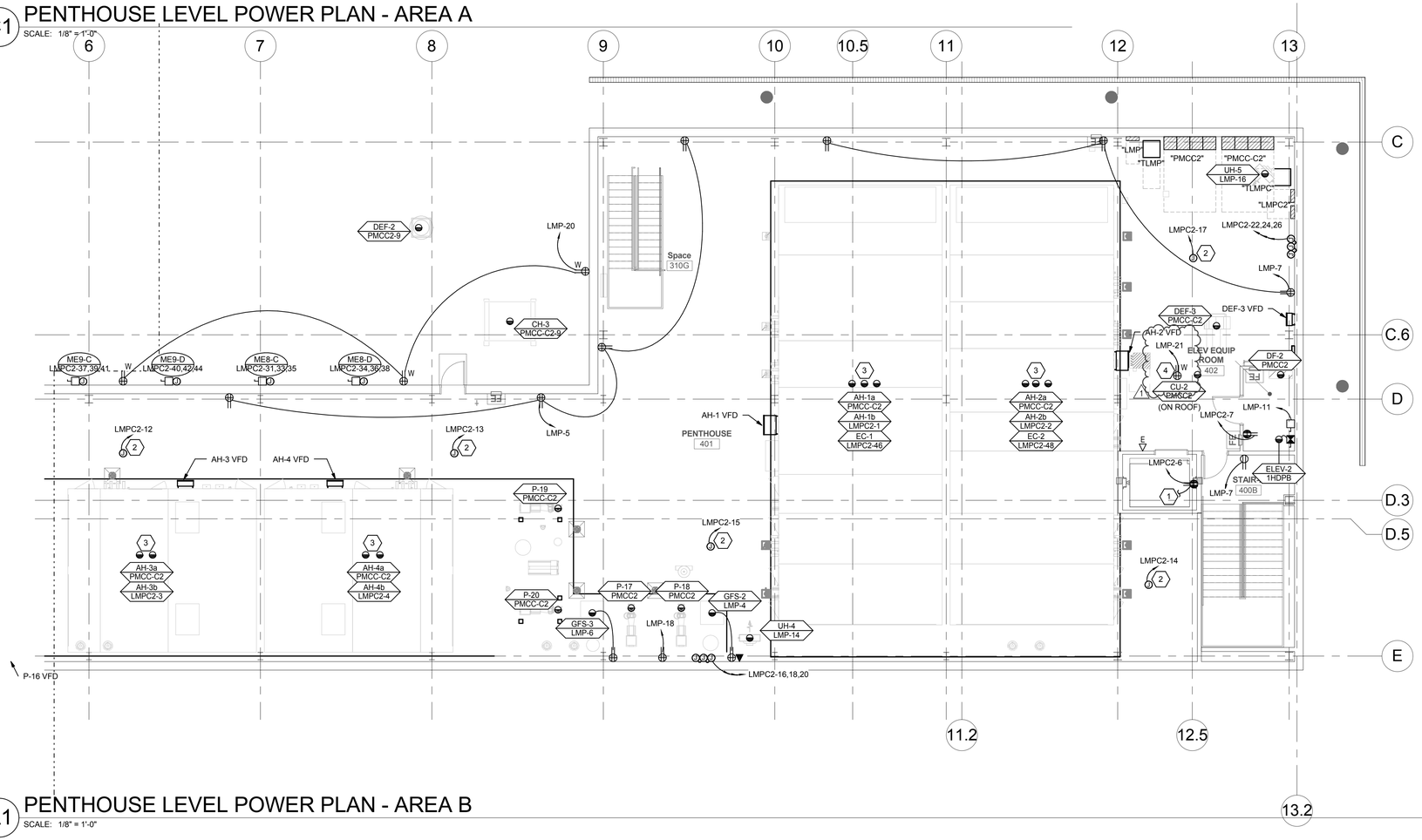

A1 PENTHOUSE LEVEL POWER PLAN - AREA B

SCALE: 1/8" = 1'-0"

GENERAL SHEET NOTES

1. LOCATIONS OF MECHANICAL EQUIPMENT SHOWN IS APPROXIMATE. FIELD COORDINATE EXACT LOCATIONS OF EQUIPMENT PRIOR TO ROUGH-IN.
2. SEE FIRE ALARM PLANS (FA) FOR ELECTRICAL CONNECTIONS TO FIRE ALARM EQUIPMENT/DEVICES.
3. PROVIDE WIRING FROM ALL REFRIGERATORS TO BMS SYSTEM TO MONITOR DRY CONTACTS ALARMS IN REFRIGERATOR.
4. MINIMUM BRANCH CIRCUIT CONDUCTOR SIZE FOR 20A, 120V OR 208V CIRCUITS SHALL BE #10 AWG, UNLESS A LARGER SIZE IS INDICATED OR REQUIRED TO MINIMIZE VOLTAGE DROP.
5. CONTRACTOR TO PROVIDE AT TIME OF OWNER MOVE-IN/OCCUPATION OF BUILDING, (20) NEMA PLUG CONVERSION/REVISIONS TO ACCOMMODATE DIFFERENT EQUIPMENT PLUGS. THIS QUANTITY IS A TOTAL FOR THE BUILDING AND NOT PER DRAWING SHEET.

SHEET KEYNOTES

1. CIRCUIT ELEVATOR HOISTWAY LIGHT TO SAME CIRCUIT AS THE ELEVATOR HOISTWAY RECEPTACLE.
2. PROVIDE J-BOX FOR MECHANICAL CONTROL CIRCUITS. COORDINATE EXACT LOCATION WITH CONTROL CONTRACTOR PRIOR TO ROUGH-IN.
3. COORDINATE EXACT LOCATIONS AND REQUIREMENTS OF VARIOUS ELECTRICAL CONNECTIONS FOR AIR HANDLER UNIT WITH HVAC CONTRACTOR.
4. ROOF MOUNTED OUTLET. PROVIDE INDEPENDENT UNISTRUT SUPPORT OR GRC CONDUIT FOR SUPPORT AND MOUNTING OF OUTLET.

KEY PLAN

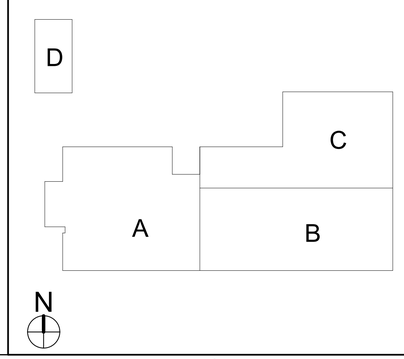

CRSA
649 E. South Temple
Salt Lake City, UT 84102
801.355.5915

MWL
11798 N. Lakeridge Pkwy.
Ashland, VA 23005
804-228-7473

State of Utah
Department of Administrative Services
Division of Facilities Construction & Management
4110 State Office Building
Salt Lake City, Utah 84114
Phone: (801) 538 - 3018
Fax: (801) 538 - 3267

DFCM APPROVAL STAMP

LICENSED PROFESSIONAL ENGINEER
No. 181563
DAVID E. WESEMANN
04-21-2014
STATE OF UTAH

ARCHITECT-ENGINEER STAMP

Unified State Laboratory Module 2

4451 South 2700 West, Taylorsville, UT 84118

DFCM #:	13020300
Project #:	B13-024

DATE:	ISSUE TYPE:
April 21, 2014	BID SET

MARK	DATE	DESCRIPTION
1	May 8, 2015	ADDENDUM #1

CHECKED BY	D. WESEMANN
DRAWN BY	DLM

PENTHOUSE LEVEL POWER PLAN

EP104

VOLUME 2

C:\Users\dlm\Documents\2013\3362\Elec-Central_DLM (84432).rvt
5/7/2015 5:26:13 PM

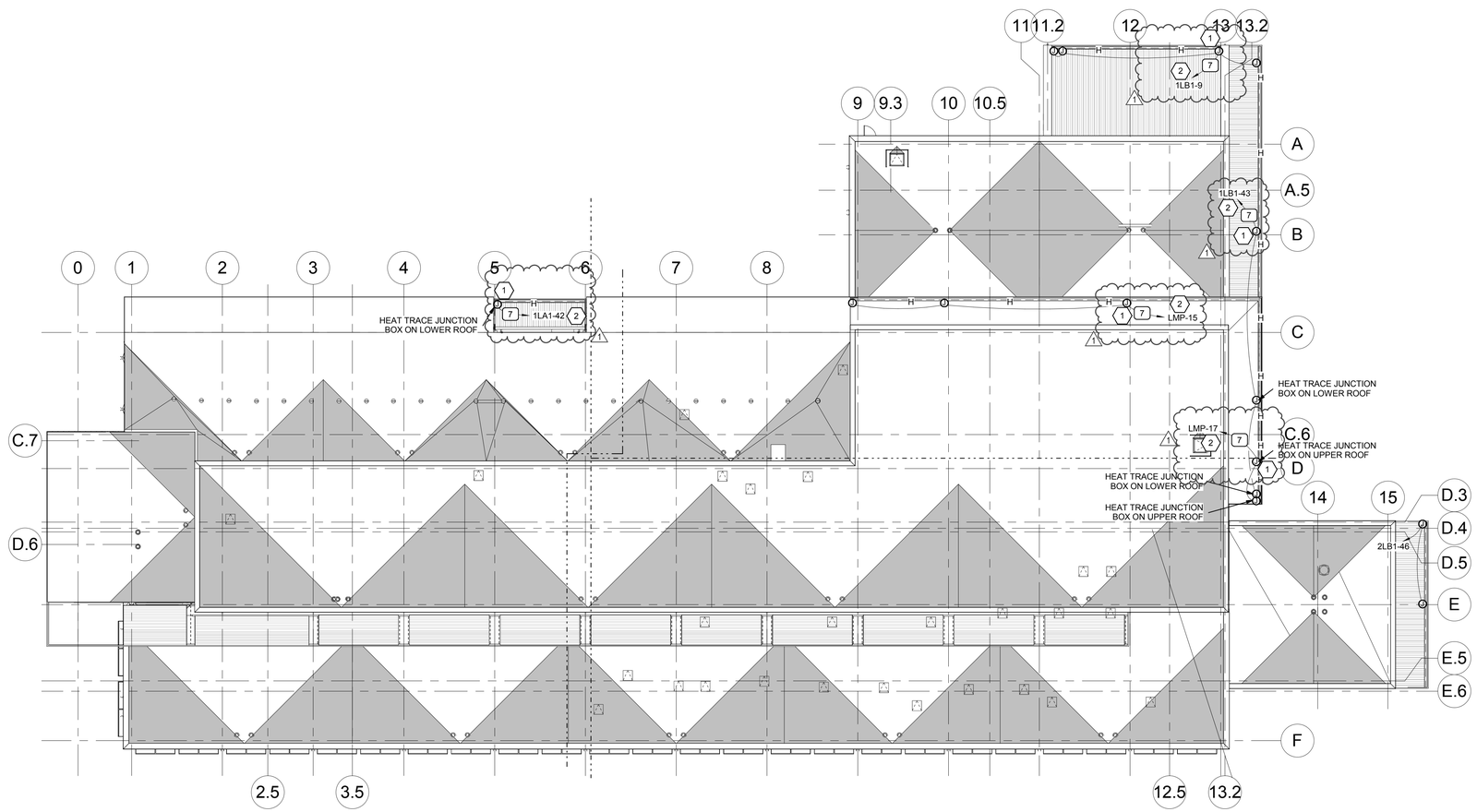

A1 ROOF POWER PLAN
SCALE: 1/16" = 1'-0"

GENERAL SHEET NOTES

1. LOCATIONS OF MECHANICAL EQUIPMENT SHOWN IS APPROXIMATE. FIELD COORDINATE EXACT LOCATIONS OF EQUIPMENT PRIOR TO ROUGH-IN.
2. SEE FIRE ALARM PLANS (FA) FOR ELECTRICAL CONNECTIONS TO FIRE ALARM EQUIPMENT/DEVICES.
3. PROVIDE WIRING FROM ALL REFRIGERATORS TO BMS SYSTEM TO MONITOR DRY CONTACTS ALARMS IN REFRIGERATOR.
4. MINIMUM BRANCH CIRCUIT CONDUCTOR SIZE FOR 20A, 120V OR 208V CIRCUITS SHALL BE #10 AWG, UNLESS A LARGER SIZE IS INDICATED OR REQUIRED TO MINIMIZE VOLTAGE DROP.
5. CONTRACTOR TO PROVIDE AT TIME OF OWNER MOVE-IN/OCCUPATION OF BUILDING, (20) NEMA PLUG CONVERSION/REVISIONS TO ACCOMMODATE DIFFERENT EQUIPMENT PLUGS. THIS QUANTITY IS A TOTAL FOR THE BUILDING AND NOT PER DRAWING SHEET.

SHEET KEYNOTES

1. PROVIDE ELECTRICAL CONNECTIONS TO GUTTER AND DOWNSPOUT HEAT TRACE PER MANUFACTURER'S WRITTEN INSTRUCTIONS. COORDINATE ALL LOCATIONS AND REQUIREMENTS WITH THE MECHANICAL DIVISION.
2. PROVIDE CIRCUITS BREAKERS IN PANELBOARD WITH 30 MA GFI TRIP, FOR ALL HEAT TRACE CIRCUITS.

CRSA
649 E. South Temple
Salt Lake City, UT 84102
801.355.5915

MWL
11798 N. Lakeridge Pkwy.
Ashland, VA 23005
804-228-7473

State of Utah
Department of Administrative Services
Division of Facilities Construction & Management
4110 State Office Building
Salt Lake City, Utah 84114
Phone: (801) 538 - 3018
Fax: (801) 538 - 3267

DFCM APPROVAL STAMP

LICENSED PROFESSIONAL ENGINEER
No. 181563
DAVID E. WESEMANN
04-21-2014
STATE OF UTAH

ARCHITECT-ENGINEER STAMP

Unified State Laboratory Module 2

4451 South 2700 West, Taylorsville, UT 84118

DFCM #:	13020300
Project #:	B13-024

DATE:	ISSUE TYPE:
April 21, 2014	BID SET

MARK	DATE	DESCRIPTION
1	May 8, 2015	ADDENDUM #1

CHECKED BY	D. WESEMANN
DRAWN BY	DLM

ROOF POWER PLAN

EP105

VOLUME 2

C:\Users\dlm\Documents\2013035ElecCentral_DLM (8432).rvt
5/7/2015 5:26:30 PM

SHEET KEYNOTES

1. COORDINATE EXACT XRAY EQUIPMENT LOCATION AND LAYOUT IN THIS SPACE WITH OWNER, ARCHITECT, AND LAB CONSULTANT PRIOR TO ROUGH-IN. PROVIDE COMPLETE ROUGH-IN AND CONNECTIONS PER EQUIPMENT SHOP DRAWINGS.
2. PROVIDE J-BOX FOR MECHANICAL CONTROL CIRCUITS. COORDINATE EXACT LOCATION WITH CONTROL CONTRACTOR PRIOR TO ROUGH-IN.
3. COORDINATE PLACEMENT OF THIS RACEWAY AND ASSOCIATED ELECTRICAL RECEPTACLES AND CONNECTIONS WITH LAB EQUIPMENT INSTALLER, TO BE PLACED UNDERNEATH BACKSIDE OF LAB FURNITURE.
4. PROVIDE NEMA 1, 480V,3-PHASE FRONT OPERATED, CIRCUIT BREAKER ENCLOSURE WITH GROUND ACCESSORRIES FOR ME25-A MAIN CIRCUIT BREAKER. ENCLOSURE SHALL CONTAIN 75A, 3-POLE CB WITH SHUNT TRIP DEVICE. FLUSH MOUNT IN WALL WHERE SHOWN. LOCATE TOP OF ENCLOSURE 6' AFF. ENCLOSURE LUGS SHALL BE ABLE TO FACILITATE #250 MCM SIZE WIRE.
5. PROVIDE 4"X2"X2" DEEP SWITCH BOX. FLUSH MOUNT IN WALL WHERE SHOWN. LOCATE BOX CENTER LINE AT 6' AFF. EC SHALL PROVIDE ONE NORMALLY OPEN SWITCH WITH RED MUSHROOM HEAD AND AN "EMERGENCY OFF" NAME PLATE. SWITCH WILL BE USED FOR ME25-A MAIN CIRCUIT BREAKER SHUNT TRIP DEVICE. COORDINATE EXACT REQUIREMENTS AND LOCATION WITH EQUIPMENT INSTALLERS PRIOR TO ROUGH-IN.
6. 12" X 12" X 4" DEEP J-BOX. LOCATE ENCLOSURE CENTER LINE AT 12" A.F.F..

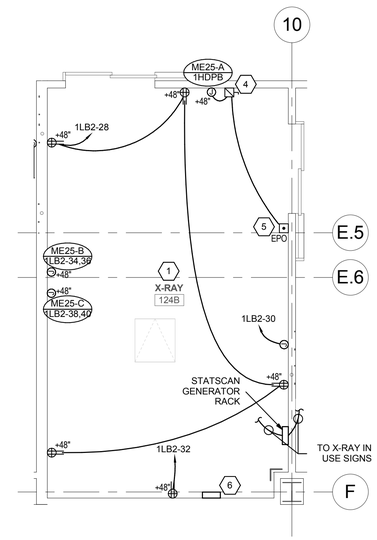

ENLARGED POWER PLAN
X-RAY 124B
C4 SCALE: 1/4" = 1'-0"

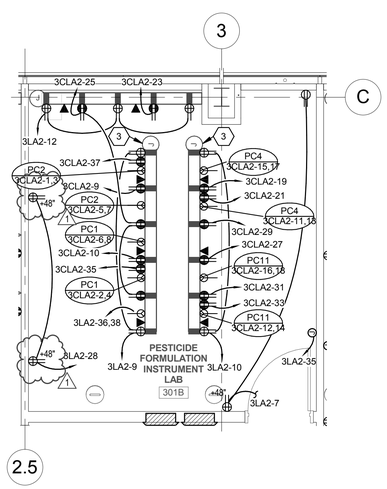

ENLARGED POWER PLAN
PESTICIDE FORMULATION
INSTRUMENT LAB 301B
A1 SCALE: 1/4" = 1'-0"

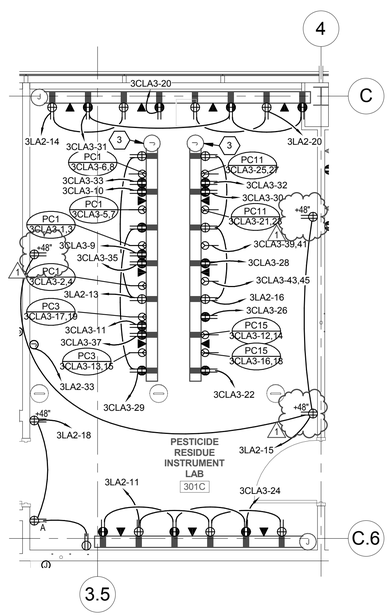

ENLARGED POWER PLAN
PESTICIDE RESIDUE
INSTRUMENT LAB 301C
A2 SCALE: 1/4" = 1'-0"

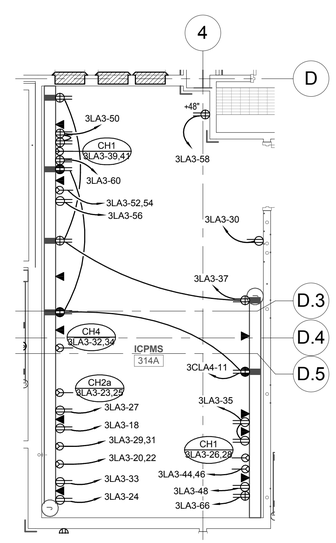

ENLARGED POWER PLAN
ICPMS 314A
A3 SCALE: 1/4" = 1'-0"

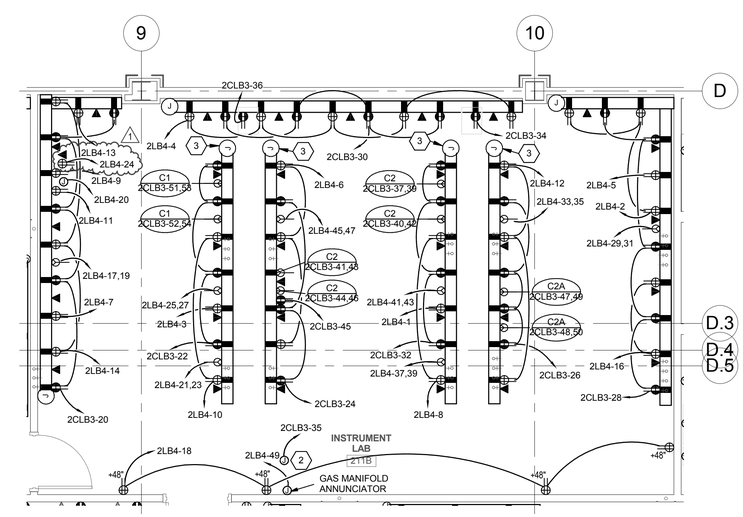

ENLARGED POWER PLAN INSTRUMENT LAB 211B
A4 SCALE: 1/4" = 1'-0"

CRSA
649 E. South Temple
Salt Lake City, UT 84102
801.355.5915

MWL
11798 N. Lakeridge Pkwy.
Ashland, VA 23005
804-228-7473

State of Utah
Department of Administrative Services
Division of Facilities Construction & Management
DFCM
4110 State Office Building
Salt Lake City, Utah 84114
Phone: (801) 538 - 3018
Fax: (801) 538 - 3267

DFCM APPROVAL STAMP

LICENSED PROFESSIONAL ENGINEER
No. 181563
DAVID E. WESEMANN
04-21-2014
STATE OF UTAH

ARCHITECT-ENGINEER STAMP

Unified State Laboratory Module 2

4451 South 2700 West, Taylorsville, UT 84118

DFCM #:	13020300
Project #:	B13-024

DATE:	ISSUE TYPE:
April 21, 2014	BID SET

MARK	DATE	DESCRIPTION
1	May 8, 2015	ADDENDUM #1

CHECKED BY	D. WESEMANN
DRAWN BY	DLM

ENLARGED LAB POWER PLANS

EP402

VOLUME 2

C:\Users\dlm\Documents\2013035ElecCentral_DLM (8432).rvt
5/7/2015 5:26:40 PM

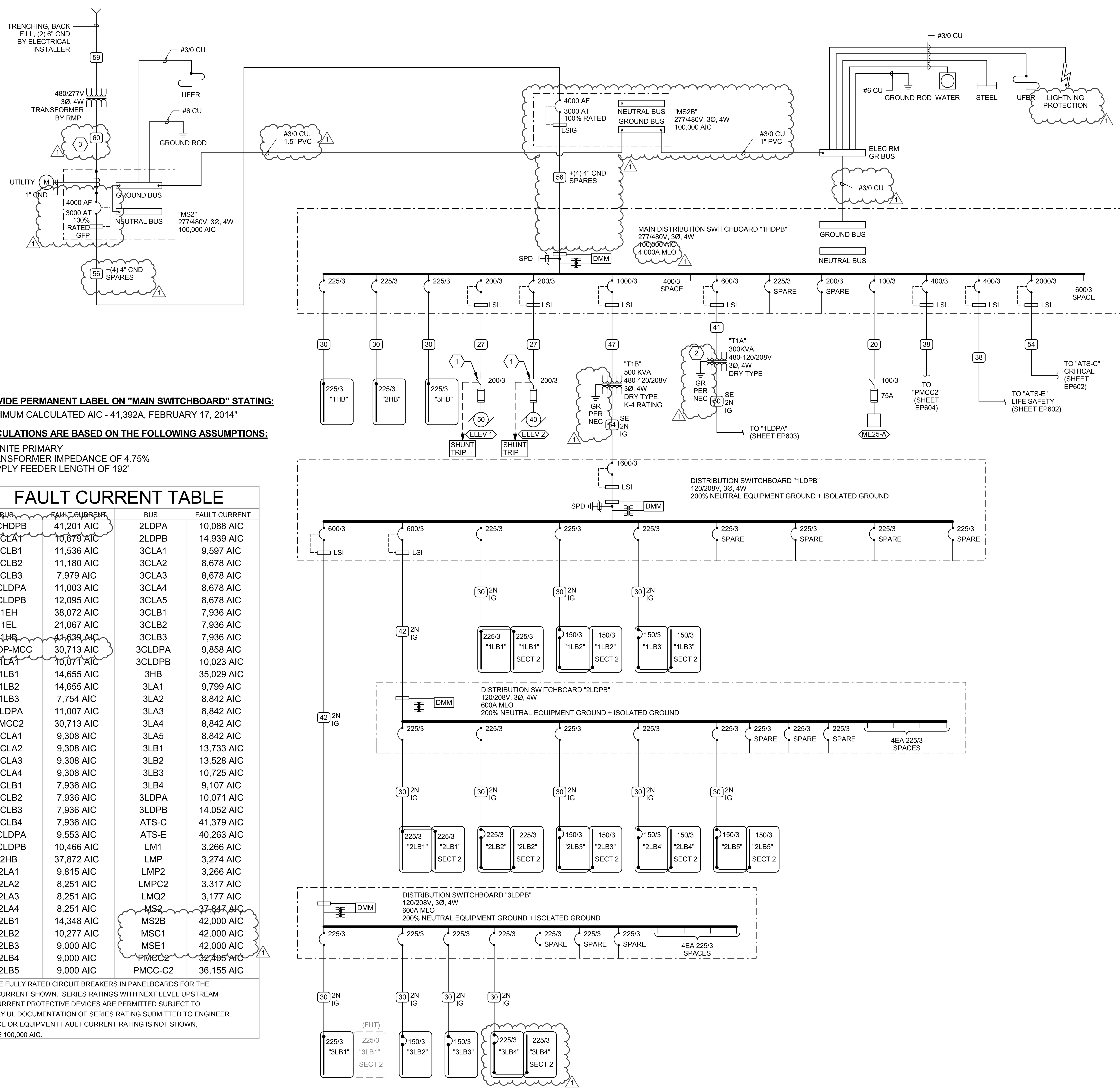

PROVIDE PERMANENT LABEL ON "MAIN SWITCHBOARD" STATING:

"MAXIMUM CALCULATED AIC - 41,392A, FEBRUARY 17, 2014"

CALCULATIONS ARE BASED ON THE FOLLOWING ASSUMPTIONS:

- INFINITE PRIMARY
- TRANSFORMER IMPEDANCE OF 4.75%
- SUPPLY FEEDER LENGTH OF 192'

FAULT CURRENT TABLE

BUS	FAULT CURRENT	BUS	FAULT CURRENT
1CHDPB	41,201 AIC	2LDPA	10,088 AIC
1CLA1	10,679 AIC	2LDPB	14,939 AIC
1CLB1	11,536 AIC	3CLA1	9,597 AIC
1CLB2	11,180 AIC	3CLA2	8,678 AIC
1CLB3	7,979 AIC	3CLA3	8,678 AIC
1CLDPA	11,003 AIC	3CLA4	8,678 AIC
1CLDPB	12,095 AIC	3CLA5	8,678 AIC
1EH	38,072 AIC	3CLB1	7,936 AIC
1EL	21,067 AIC	3CLB2	7,936 AIC
1HB	41,639 AIC	3CLB3	7,936 AIC
1HDP-MCC	30,713 AIC	3CLDPA	9,858 AIC
1LA1	10,071 AIC	3CLDPB	10,023 AIC
1LB1	14,655 AIC	3HB	35,029 AIC
1LB2	14,655 AIC	3LA1	9,799 AIC
1LB3	7,754 AIC	3LA2	8,842 AIC
1LDPA	11,007 AIC	3LA3	8,842 AIC
1MCC2	30,713 AIC	3LA4	8,842 AIC
2CLA1	9,308 AIC	3LA5	8,842 AIC
2CLA2	9,308 AIC	3LB1	13,733 AIC
2CLA3	9,308 AIC	3LB2	13,528 AIC
2CLA4	9,308 AIC	3LB3	10,725 AIC
2CLB1	7,936 AIC	3LB4	9,107 AIC
2CLB2	7,936 AIC	3LDPA	10,071 AIC
2CLB3	7,936 AIC	3LDPB	14.052 AIC
2CLB4	7,936 AIC	ATS-C	41,379 AIC
2CLDPA	9,553 AIC	ATS-E	40,263 AIC
2CLDPB	10,466 AIC	LM1	3,266 AIC
2HB	37,872 AIC	LMP	3,274 AIC
2LA1	9,815 AIC	LMP2	3,266 AIC
2LA2	8,251 AIC	LMPC2	3,317 AIC
2LA3	8,251 AIC	LMQ2	3,177 AIC
2LA4	8,251 AIC	MS2	37,847 AIC
2LB1	14,348 AIC	MS2B	42,000 AIC
2LB2	10,277 AIC	MSC1	42,000 AIC
2LB3	9,000 AIC	MSE1	42,000 AIC
2LB4	9,000 AIC	PMCC2	32,405 AIC
2LB5	9,000 AIC	PMCC-C2	36,155 AIC

PROVIDE FULLY RATED CIRCUIT BREAKERS IN PANELBOARDS FOR THE FAULT CURRENT SHOWN. SERIES RATINGS WITH NEXT LEVEL UPSTREAM OVERCURRENT PROTECTIVE DEVICES ARE PERMITTED SUBJECT TO FACTORY UL DOCUMENTATION OF SERIES RATING SUBMITTED TO ENGINEER. IF DEVICE OR EQUIPMENT FAULT CURRENT RATING IS NOT SHOWN, ASSUME 100,000 AIC.

C:\Users\dlm\Documents\20130362Elec Central_DLM (8432).rvt
5/7/2015 5:26:47 PM

A1 POWER ONE-LINE DIAGRAM - MODULE 2 (a)

SCALE: NTS

GENERAL SHEET NOTES

1. PROVIDE NEMA 3R ENCLOSURES FOR EQUIPMENT LOCATED OUTDOORS. REFER TO PLANS FOR EQUIPMENT LOCATIONS.
2. REFER TO PLANS FOR CONSTRAINTS ON PHYSICAL DIMENSIONS AND CLEARANCE REQUIREMENTS OF EQUIPMENT. PROVIDE EQUIPMENT DIMENSIONS THAT FALL WITHIN THE CONSTRAINTS OF EACH SPECIFIC LOCATION.
3. ALL EQUIPMENT SHALL BE CONSTRUCTED AND BRACED FOR THE SEISMIC CONDITIONS OF THE PROJECT. REFER TO SPECIFICATIONS SECTION 16071 FOR REQUIREMENTS.
4. ALL 120/208V PANELBOARDS SHALL BE PROVIDED WITH 200% NEUTRAL CAPACITY AND AN ISOLATED GROUND BUS IN ADDITION TO THE EQUIPMENT GROUNDING BUS.
5. PROVIDE PERFORMANCE TESTING FOR GROUND-FAULT PROTECTION SYSTEMS ON SITE WITH A WRITTEN RECORD OF THIS TEST SUBMITTED TO THE AUTHORITY HAVING JURISDICTION PER 2011 NEC 230.95(C).

SHEET KEYNOTES

1. PROVIDE SHUNT TRIP FUSIBLE SWITCH WITH FUSE SIZE BASED ON MANUFACTURER'S WRITTEN INSTRUCTIONS AND ACTUAL MOTOR NAMEPLATE.
2. RELOCATE/REUSE EXISTING 300 KVA TRANSFORMER FROM A PREVIOUS PROJECT. RELABEL TRANSFORMER AS "T1A". SEE A2/EP101D.
3. VERIFY CONDUIT REQUIREMENTS WITH RMP PRIOR TO INSTALLATION.

CONDUCTOR AND CONDUIT "CC" SCHEDULE

** — SCHEDULE NUMBER
* — SUBSCRIPT (NOTE 5)
(E.G.) 5 IG

SYM	AMP	CONDUIT SIZE	CONDUCTOR (NOTE 1) QTY	SIZE	G	IG	SE	NOTES
1	20	.75	2	12	12	12	8	2
2	20	.75	3	12	12	12	8	2,3
3	20	.75	4	12	12	12	8	2,3
4	30	.75	2	10	10	10	8	2
5	30	.75	3	10	10	10	8	2
6	30	.75	4	10	10	10	8	2
7	40	1	2	8	10	8	6	2
8	40	1	3	8	10	8	6	2
9	40	1	4	8	10	8	6	2
10	55	1	2	6	10	8	4	2
11	55	1	3	6	10	8	4	2
12	55	1.25	4	6	10	8	4	2
13	70	1	2	4	8	4	2	2
14	70	1.25	3	4	8	4	2	2
15	70	1.25	4	4	8	4	2	2
16	85	1.25	2	3	8	3	2	2
17	85	1.25	3	3	8	3	2	2
18	85	1.25	4	3	8	3	2	2
19	95	1.25	3	2	8	2	2	2
20	95	1.50	4	2	8	2	2	2
21	130	1.50	3	1	6	2	2	2
22	130	1.50	4	1	6	2	2	2
23	150	2	3	1/0	6	2	1/0	2
24	150	2	4	1/0	6	2	1/0	2
25	175	2	3	2/0	6	2	2/0	2
26	175	2	4	2/0	6	2	2/0	2
27	200	2	3	3/0	6	2	2/0	2
28	200	2.50	4	3/0	6	2	2/0	2
29	230	2.50	3	4/0	4	2	2/0	2
30	230	2.50	4	4/0	4	2	2/0	2
31	255	2.50	3	250	4	1	2/0	2
32	255	2.50	4	250	4	1	2/0	2
33	310	3	3	350	3	1/0	3/0	2
34	310	3	4	350	3	1/0	3/0	2
35	380	3.50	3	500	3	3/0	3/0	2
36	380	4	4	500	3	3/0	3/0	2
37	400	2 EA 2	3	3/0	3	3/0	3/0	2
38	400	2 EA 2.50	4	3/0	3	3/0	3/0	2
39	510	2 EA 2.50	3	250	1	4/0	3/0	2
40	510	2 EA 3	4	250	1	4/0	3/0	2
41	620	2 EA 3	3	350	1/0	4/0	3/0	2,4
42	620	2 EA 3.50	4	350	1/0	4/0	3/0	2,4
43	780	2 EA 3.50	3	500	1/0	4/0	3/0	2,4
44	780	2 EA 4	4	500	1/0	4/0	3/0	2,4
45	855	3 EA 3	3	300	2/0	4/0	3/0	2,4
46	855	3 EA 3	4	300	2/0	4/0	3/0	2,4
47	1000	3 EA 3.50	3	400	2/0	4/0	3/0	4
48	1000	3 EA 3.50	4	400	2/0	4/0	3/0	4
49	1140	3 EA 4	3	500	3/0	4/0	3/0	4
50	1140	3 EA 4	4	500	3/0	4/0	3/0	4
51	1240	4 EA 3	3	350	3/0	4/0	3/0	4
52	1240	4 EA 3	4	350	3/0	4/0	3/0	4
53	1675	5 EA 4	4	400	4/0	4/0	4/0	4
54	2010	6 EA 4	4	400	250	250	250	4
55	2660	7 EA 4	4	500	350	350	350	4
56	3040	8 EA 4	4	500	500	500	500	4
57	4180	11 EA 4	4	500	500	500	500	4
58		5 EA 4						6
59		2 EA 6						6
60		12 EA 6						6

CONDUIT AND CONDUCTOR SCHEDULE NOTES

1. CONDUCTORS SHOWN ARE SHOWN FOR EACH CONDUIT WITH MODIFICATIONS AS NOTED IN NOTE 5. ALL CONDUCTORS SHOWN ARE THWN UNLESS OTHERWISE NOTED.
2. PROVIDE EQUIPMENT GROUND CONDUCTORS PER TABLE 250-122 WHEN CIRCUIT BREAKERS ARE SIZED GREATER THAN AMPERE RATING SHOWN IN TABLE.
3. PROVIDE #10 NEUTRALS FOR MULTIWIRE BRANCH CIRCUITS SERVING COMPUTERS.
4. GROUND (G) CONDUCTOR MAY BE DELETED ON SERVICE ENTRANCE CONDUCTORS.
5. SYMBOL SUBSCRIPTS:

   "IG": INCLUDE IG (INSULATED/ISOLATED GROUND CONDUCTOR) SCHEDULED ALONG WITH THE GROUND OF EQUIPMENT GROUND CONDUCTOR.

   "SE": SUBSTITUTE "SE" CONDUCTOR FOR "G" CONDUCTOR SHOWN, WHICH IS SIZED FOR THE GROUNDING OF THE SECONDARY OF THE SEPARATELY DERIVED SYSTEM.

   "2N": INCLUDE TWO NEUTRAL CONDUCTORS, SIZED AS SCHEDULED FOR PHASED AND NEUTRAL CONDUCTORS.
6. RACEWAY ONLY. CONDUCTORS PROVIDED BY UTILITY.

CRSA

649 E. South Temple
Salt Lake City, UT 84102
801.355.5915

MWL

11798 N. Lakeridge Pkwy.
Ashland, VA 23005
804-228-7473

State of Utah
Department of Administrative Services
Division of Facilities Construction & Management
DFCM
4110 State Office Building
Salt Lake City, Utah 84114
Phone: (801) 538 - 3018
Fax: (801) 538 - 3267

DFCM APPROVAL STAMP

LICENSED PROFESSIONAL ENGINEER No. 181563 DAVID E. WESEMANN 04-21-2014 STATE OF UTAH

ARCHITECT-ENGINEER STAMP

Unified State Laboratory Module 2

4451 South 2700 West,
Taylorsville, UT 84118

DFCM #: 13020300

Project #: B13-024

DATE:	ISSUE TYPE:
April 21, 2014	BID SET

MARK	DATE	DESCRIPTION
1	May 8, 2015	ADDENDUM #1

CHECKED BY: D. WESEMANN

DRAWN BY: DLM

POWER ONE-LINE DIAGRAM - MODULE 2 (a)

EP601

VOLUME 2

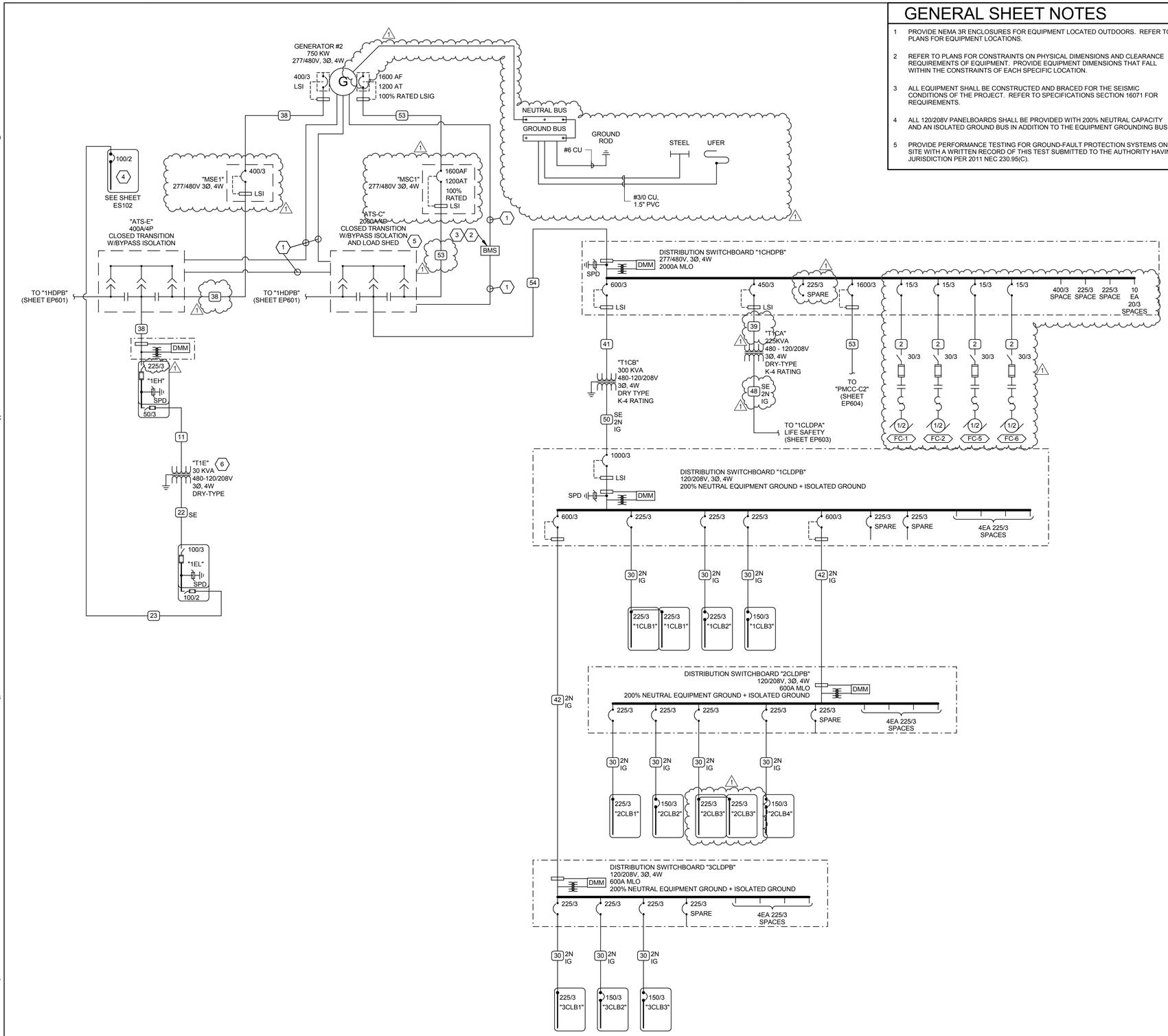

GENERAL SHEET NOTES

1. PROVIDE NEMA 3R ENCLOSURES FOR EQUIPMENT LOCATED OUTDOORS. REFER TO PLANS FOR EQUIPMENT LOCATIONS.
2. REFER TO PLANS FOR CONSTRAINTS ON PHYSICAL DIMENSIONS AND CLEARANCE REQUIREMENTS OF EQUIPMENT. PROVIDE EQUIPMENT DIMENSIONS THAT FALL WITHIN THE CONSTRAINTS OF EACH SPECIFIC LOCATION.
3. ALL EQUIPMENT SHALL BE CONSTRUCTED AND BRACED FOR THE SEISMIC CONDITIONS OF THE PROJECT. REFER TO SPECIFICATIONS SECTION 16071 FOR REQUIREMENTS.
4. ALL 120/208V PANELBOARDS SHALL BE PROVIDED WITH 200% NEUTRAL CAPACITY AND AN ISOLATED GROUND BUS IN ADDITION TO THE EQUIPMENT GROUNDING BUS.
5. PROVIDE PERFORMANCE TESTING FOR GROUND-FAULT PROTECTION SYSTEMS ON SITE WITH A WRITTEN RECORD OF THIS TEST SUBMITTED TO THE AUTHORITY HAVING JURISDICTION PER 2011 NEC 230.95(C).

SHEET KEYNOTES

1. 1.5" CND WITH WIRING PER MANUFACTURERS WRITTEN INSTRUCTIONS.
2. COORDINATE CONNECTION AND MONITORING OF GENERATOR AND EACH TRANSFER SWITCH WITH BMS INSTALLER.
3. WHEN CONNECTED TO GENERATOR, BMS SHALL INITIATE A LOAD-SHED SEQUENCE SUCH THAT LIMITS TOTAL FAN LOAD TO 50% OF LESS.
4. GENERATOR ENCLOSURE LOAD CENTER, PREWIRED TO GENERATOR AUXILIARY LOADS SHALL BE PROVIDED WITH GENERATOR SET: 120/208V 1-PHASE, 3-WIRE. APPROXIMATE TOTAL LOAD: 15 KW.
5. PROGRAM ATS-C TO TRANSFER TO GENERATOR WITH A 20 SECOND DELAY AFTER ATS-E TRANSFERS, AND TO LOAD SHED IF GENERATOR LOSES FREQUENCY FOR A PRE-DEFINED PERIOD OF TIME, OR IS IN OVERTEMP ALARM.
6. SUPPORT AND HANG TRANSFORMER "T1E" FROM BUILDING STRUCTURE.

CONDUCTOR AND CONDUIT "CC" SCHEDULE

SCHEDULE NUMBER
SUBSCRIPT (NOTE 5)
(E.G.) 5 IG

SYM	AMP	CONDUIT SIZE	CONDUCTOR (NOTE 1) QTY	SIZE	G	IG	SE	NOTES
1	20	.75	2	12	12	12	8	2
2	20	.75	3	12	12	12	8	2,3
3	20	.75	4	12	12	12	8	2,3
4	30	.75	2	10	10	10	8	2
5	30	.75	3	10	10	10	8	2
6	30	.75	4	10	10	10	8	2
7	40	1	2	8	10	8	6	2
8	40	1	3	8	10	8	6	2
9	40	1	4	8	10	8	6	2
10	55	1	2	6	10	8	4	2
11	55	1	3	6	10	8	4	2
12	55	1.25	4	6	10	8	4	2
13	70	1	2	4	8	4	2	2
14	70	1.25	3	4	8	4	2	2
15	70	1.25	4	4	8	4	2	2
16	85	1.25	2	3	8	3	2	2
17	85	1.25	3	3	8	3	2	2
18	85	1.25	4	3	8	3	2	2
19	95	1.25	3	2	8	2	2	2
20	95	1.50	4	2	8	2	2	2
21	130	1.50	3	1	6	2	2	2
22	130	1.50	4	1	6	2	2	2
23	150	2	3	1/0	6	2	1/0	2
24	150	2	4	1/0	6	2	1/0	2
25	175	2	3	2/0	6	2	2/0	2
26	175	2	4	2/0	6	2	2/0	2
27	200	2	3	3/0	6	2	2/0	2
28	200	2.50	4	3/0	6	2	2/0	2
29	230	2.50	3	4/0	4	2	2/0	2
30	230	2.50	4	4/0	4	2	2/0	2
31	255	2.50	3	250	4	1	2/0	2
32	255	2.50	4	250	4	1	2/0	2
33	310	3	3	350	3	1/0	3/0	2
34	310	3	4	350	3	1/0	3/0	2
35	380	3.50	3	500	3	3/0	3/0	2
36	380	4	4	500	3	3/0	3/0	2
37	400	2 EA 2	3	3/0	3	3/0	3/0	2
38	400	2 EA 2.50	4	3/0	3	3/0	3/0	2
39	510	2 EA 2.50	3	250	1	4/0	3/0	2
40	510	2 EA 3	4	250	1	4/0	3/0	2
41	620	2 EA 3	3	350	1/0	4/0	3/0	2,4
42	620	2 EA 3.50	4	350	1/0	4/0	3/0	2,4
43	780	2 EA 3.50	3	500	1/0	4/0	3/0	2,4
44	780	2 EA 4	4	500	1/0	4/0	3/0	2,4
45	855	3 EA 3	3	300	2/0	4/0	3/0	2,4
46	855	3 EA 3	4	300	2/0	4/0	3/0	2,4
47	1000	3 EA 3.50	3	400	2/0	4/0	3/0	4
48	1000	3 EA 3.50	4	400	2/0	4/0	3/0	4
49	1140	3 EA 4	3	500	3/0	4/0	3/0	4
50	1140	3 EA 4	4	500	3/0	4/0	3/0	4
51	1240	4 EA 3	3	350	3/0	4/0	3/0	4
52	1240	4 EA 3	4	350	3/0	4/0	3/0	4
53	1675	5 EA 4	4	400	4/0	4/0	4/0	4
54	2010	6 EA 4	4	400	250	250	250	4
55	2660	7 EA 4	4	500	350	350	350	4
56	3040	8 EA 4	4	500	500	500	500	4
57	4180	11 EA 4	4	500	500	500	500	4
58		5 EA 4						6
59		2 EA 6						6
60		12 EA 6						6

CONDUIT AND CONDUCTOR SCHEDULE NOTES

1. CONDUCTORS SHOWN ARE SHOWN FOR EACH CONDUIT WITH MODIFICATIONS AS NOTED IN NOTE 5. ALL CONDUCTORS SHOWN ARE THWN UNLESS OTHERWISE NOTED.
2. PROVIDE EQUIPMENT GROUND CONDUCTORS PER TABLE 250-122 WHEN CIRCUIT BREAKERS ARE SIZED GREATER THAN AMPERE RATING SHOWN IN TABLE.
3. PROVIDE #10 NEUTRALS FOR MULTIWIRE BRANCH CIRCUITS SERVING COMPUTERS.
4. GROUND (G) CONDUCTOR MAY BE DELETED ON SERVICE ENTRANCE CONDUCTORS.
5. SYMBOL SUBSCRIPTS:

   "IG": INCLUDE IG (INSULATED/ISOLATED GROUND CONDUCTOR) SCHEDULED ALONG WITH THE GROUND OF EQUIPMENT GROUND CONDUCTOR.

   "SE": SUBSTITUTE "SE" CONDUCTOR FOR "G" CONDUCTOR SHOWN, WHICH IS SIZED FOR THE GROUNDING OF THE SECONDARY OF THE SEPARATELY DERIVED SYSTEM.

   "2N": INCLUDE TWO NEUTRAL CONDUCTORS, SIZED AS SCHEDULED FOR PHASED AND NEUTRAL CONDUCTORS.
6. RACEWAY ONLY. CONDUCTORS PROVIDED BY UTILITY.

A1 POWER ONE-LINE DIAGRAM - MODULE 2 (b)
SCALE: NTS

CRSA
649 E. South Temple
Salt Lake City, UT 84102
801.355.5915

MWL
11798 N. Lakeridge Pkwy.
Ashland, VA 23005
804-228-7473

State of Utah
Department of Administrative Services
Division of Facilities Construction & Management
4110 State Office Building
Salt Lake City, Utah 84114
Phone: (801) 538 - 3018
Fax: (801) 538 - 3267

DFCM APPROVAL STAMP

No. 181563
DAVID E. WESEMANN
04-21-2014
STATE OF UTAH
LICENSED PROFESSIONAL ENGINEER

ARCHITECT-ENGINEER STAMP

Unified State Laboratory Module 2
4451 South 2700 West,
Taylorsville, UT 84118

DFCM #: 13020300
Project #: B13-024

DATE:	ISSUE TYPE:
April 21, 2014	BID SET

MARK	DATE	DESCRIPTION
1	May 8, 2015	ADDENDUM #1

CHECKED BY: D. WESEMANN
DRAWN BY: DLM

POWER ONE-LINE DIAGRAM - MODULE 2 (b)

EP602
VOLUME 2

C:\Users\dlm\Documents\2013\3622Elec-Central_DLM (8432).rvt
5/7/2015 5:26:53 PM

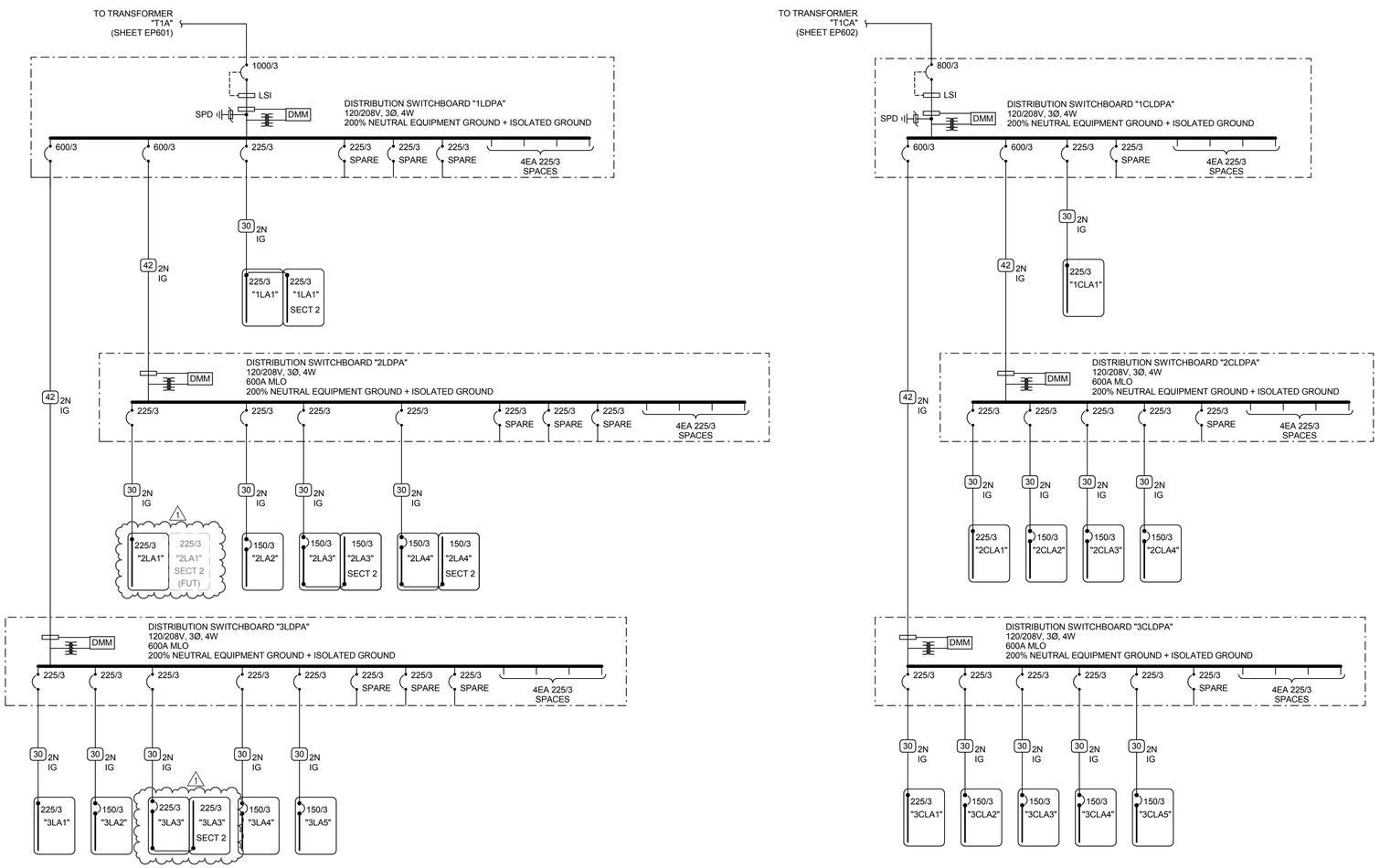

A1 POWER ONE-LINE DIAGRAM - MODULE 2 (c)

SCALE: NTS

GENERAL SHEET NOTES

1. PROVIDE NEMA 3R ENCLOSURES FOR EQUIPMENT LOCATED OUTDOORS. REFER TO PLANS FOR EQUIPMENT LOCATIONS.
2. REFER TO PLANS FOR CONSTRAINTS ON PHYSICAL DIMENSIONS AND CLEARANCE REQUIREMENTS OF EQUIPMENT. PROVIDE EQUIPMENT DIMENSIONS THAT FALL WITHIN THE CONSTRAINTS OF EACH SPECIFIC LOCATION.
3. ALL EQUIPMENT SHALL BE CONSTRUCTED AND BRACED FOR THE SEISMIC CONDITIONS OF THE PROJECT. REFER TO SPECIFICATIONS SECTION 16071 FOR REQUIREMENTS.
4. ALL 120/208V PANELBOARDS SHALL BE PROVIDED WITH 200% NEUTRAL CAPACITY AND AN ISOLATED GROUND BUS IN ADDITION TO THE EQUIPMENT GROUNDING BUS.
5. PROVIDE PERFORMANCE TESTING FOR GROUND-FAULT PROTECTION SYSTEMS ON SITE WITH A WRITTEN RECORD OF THIS TEST SUBMITTED TO THE AUTHORITY HAVING JURISDICTION PER 2011 NEC 230.95(C).

CONDUCTOR AND CONDUIT "CC" SCHEDULE

SCHEDULE NUMBER
SUBSCRIPT (NOTE 5)
(E.G.) 5 IG

SYM	AMP	CONDUIT SIZE	CONDUCTOR (NOTE 1) QTY	SIZE	G	IG	SE	NOTES
1	20	.75	2	12	12	12	8	2
2	20	.75	3	12	12	12	8	2,3
3	20	.75	4	12	12	12	8	2,3
4	30	.75	2	10	10	10	8	2
5	30	.75	3	10	10	10	8	2
6	30	.75	4	10	10	10	8	2
7	40	1	2	8	10	8	6	2
8	40	1	3	8	10	8	6	2
9	40	1	4	8	10	8	6	2
10	55	1	2	6	10	8	4	2
11	55	1	3	6	10	8	4	2
12	55	1.25	4	6	10	8	4	2
13	70	1	2	4	8	4	2	2
14	70	1.25	3	4	8	4	2	2
15	70	1.25	4	4	8	4	2	2
16	85	1.25	2	3	8	3	2	2
17	85	1.25	3	3	8	3	2	2
18	85	1.25	4	3	8	3	2	2
19	95	1.25	3	2	8	2	2	2
20	95	1.50	4	2	8	2	2	2
21	130	1.50	3	1	6	2	2	2
22	130	1.50	4	1	6	2	2	2
23	150	2	3	1/0	6	2	1/0	2
24	150	2	4	1/0	6	2	1/0	2
25	175	2	3	2/0	6	2	2/0	2
26	175	2	4	2/0	6	2	2/0	2
27	200	2	3	3/0	6	2	2/0	2
28	200	2.50	4	3/0	6	2	2/0	2
29	230	2.50	3	4/0	4	2	2/0	2
30	230	2.50	4	4/0	4	2	2/0	2
31	255	2.50	3	250	4	1	2/0	2
32	255	2.50	4	250	4	1	2/0	2
33	310	3	3	350	3	1/0	3/0	2
34	310	3	4	350	3	1/0	3/0	2
35	380	3.50	3	500	3	3/0	3/0	2
36	380	4	4	500	3	3/0	3/0	2
37	400	2 EA 2	3	3/0	3	3/0	3/0	2
38	400	2 EA 2.50	4	3/0	3	3/0	3/0	2
39	510	2 EA 2.50	3	250	1	4/0	3/0	2
40	510	2 EA 3	4	250	1	4/0	3/0	2
41	620	2 EA 3	3	350	1/0	4/0	3/0	2,4
42	620	2 EA 3.50	4	350	1/0	4/0	3/0	2,4
43	780	2 EA 3.50	3	500	1/0	4/0	3/0	2,4
44	780	2 EA 4	4	500	1/0	4/0	3/0	2,4
45	855	3 EA 3	3	300	2/0	4/0	3/0	2,4
46	855	3 EA 3	4	300	2/0	4/0	3/0	2,4
47	1000	3 EA 3.50	3	400	2/0	4/0	3/0	4
48	1000	3 EA 3.50	4	400	2/0	4/0	3/0	4
49	1140	3 EA 4	3	500	3/0	4/0	3/0	4
50	1140	3 EA 4	4	500	3/0	4/0	3/0	4
51	1240	4 EA 3	3	350	3/0	4/0	3/0	4
52	1240	4 EA 3	4	350	3/0	4/0	3/0	4
53	1675	5 EA 4	4	400	4/0	4/0	4/0	4
54	2010	6 EA 4	4	400	250	250	250	4
55	2660	7 EA 4	4	500	350	350	350	4
56	3040	8 EA 4	4	500	500	500	500	4
57	4180	11 EA 4	4	500	500	500	500	4
58		5 EA 4						6
59		2 EA 6						6
60		12 EA 6						6

CONDUIT AND CONDUCTOR SCHEDULE NOTES

1. CONDUCTORS SHOWN ARE SHOWN FOR EACH CONDUIT WITH MODIFICATIONS AS NOTED IN NOTE 5. ALL CONDUCTORS SHOWN ARE THWN UNLESS OTHERWISE NOTED.
2. PROVIDE EQUIPMENT GROUND CONDUCTORS PER TABLE 250-122 WHEN CIRCUIT BREAKERS ARE SIZED GREATER THAN AMPERE RATING SHOWN IN TABLE.
3. PROVIDE #10 NEUTRALS FOR MULTIWIRE BRANCH CIRCUITS SERVING COMPUTERS.
4. GROUND (G) CONDUCTOR MAY BE DELETED ON SERVICE ENTRANCE CONDUCTORS.
5. SYMBOL SUBSCRIPTS:

   "IG": INCLUDE IG (INSULATED/ISOLATED GROUND CONDUCTOR) SCHEDULED ALONG WITH THE GROUND OF EQUIPMENT GROUND CONDUCTOR.

   "SE": SUBSTITUTE "SE" CONDUCTOR FOR "G" CONDUCTOR SHOWN, WHICH IS SIZED FOR THE GROUNDING OF THE SECONDARY OF THE SEPARATELY DERIVED SYSTEM.

   "2N": INCLUDE TWO NEUTRAL CONDUCTORS, SIZED AS SCHEDULED FOR PHASED AND NEUTRAL CONDUCTORS.
6. RACEWAY ONLY. CONDUCTORS PROVIDED BY UTILITY.

CRSA
649 E. South Temple
Salt Lake City, UT 84102
801.355.5915

MWL
11798 N. Lakeridge Pkwy.
Ashland, VA 23005
804-228-7473

State of Utah
Department of Administrative Services
Division of Facilities Construction & Management
4110 State Office Building
Salt Lake City, Utah 84114
Phone: (801) 538 - 3018
Fax: (801) 538 - 3267

DFCM APPROVAL STAMP

LICENSED PROFESSIONAL ENGINEER
No. 181563
DAVID E. WESEMANN
04-21-2014
STATE OF UTAH

ARCHITECT-ENGINEER STAMP

Unified State Laboratory Module 2

4451 South 2700 West, Taylorsville, UT 84118

DFCM #: 13020300

Project #: B13-024

DATE:	ISSUE TYPE:
April 21, 2014	BID SET

MARK	DATE	DESCRIPTION
1	May 8, 2015	ADDENDUM #1

CHECKED BY: D. WESEMANN

DRAWN BY: DLM

POWER ONE-LINE DIAGRAM - MODULE 2 (c)

EP603

VOLUME 2

C:\Users\dlm\Documents\20130620Elec-Central_DLM (84320).rvt
5/7/2015 5:26:58 PM

GENERAL SHEET NOTES

1. PROVIDE NEMA 3R ENCLOSURES FOR EQUIPMENT LOCATED OUTDOORS. REFER TO PLANS FOR EQUIPMENT LOCATIONS.
2. REFER TO PLANS FOR CONSTRAINTS ON PHYSICAL DIMENSIONS AND CLEARANCE REQUIREMENTS OF EQUIPMENT. PROVIDE EQUIPMENT DIMENSIONS THAT FALL WITHIN THE CONSTRAINTS OF EACH SPECIFIC LOCATION.
3. ALL EQUIPMENT SHALL BE CONSTRUCTED AND BRACED FOR THE SEISMIC CONDITIONS OF THE PROJECT. REFER TO SPECIFICATIONS SECTION 16071 FOR REQUIREMENTS.
4. ALL 120/208V PANELBOARDS SHALL BE PROVIDED WITH 200% NEUTRAL CAPACITY AND AN ISOLATED GROUND BUS IN ADDITION TO THE EQUIPMENT GROUNDING BUS.
5. PROVIDE PERFORMANCE TESTING FOR GROUND-FAULT PROTECTION SYSTEMS ON SITE WITH A WRITTEN RECORD OF THIS TEST SUBMITTED TO THE AUTHORITY HAVING JURISDICTION PER 2011 NEC 230.95(C).

SHEET KEYNOTES

1. PROVIDE CONDUIT AND WIRING TO INTERLOCK INDOOR UNIT WITH OUTDOOR UNIT.

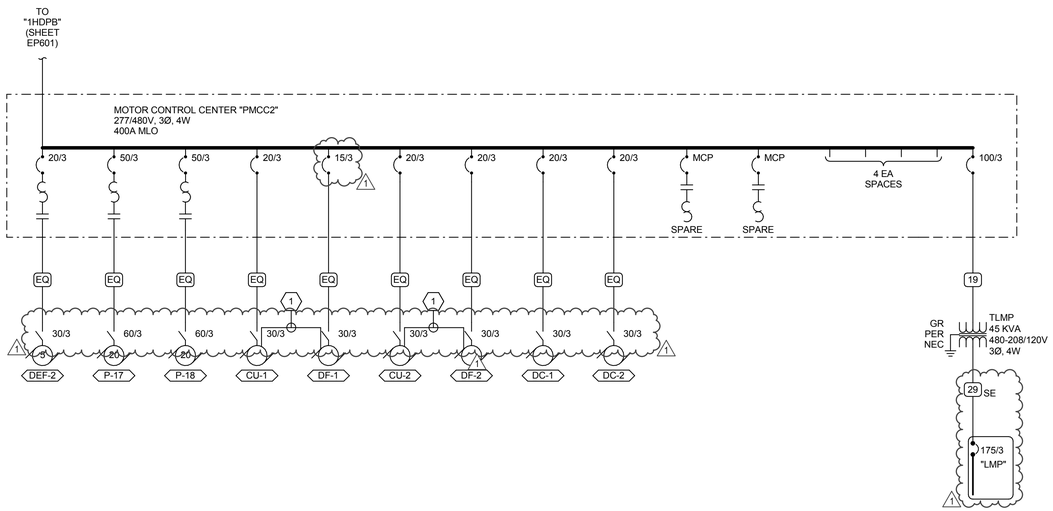

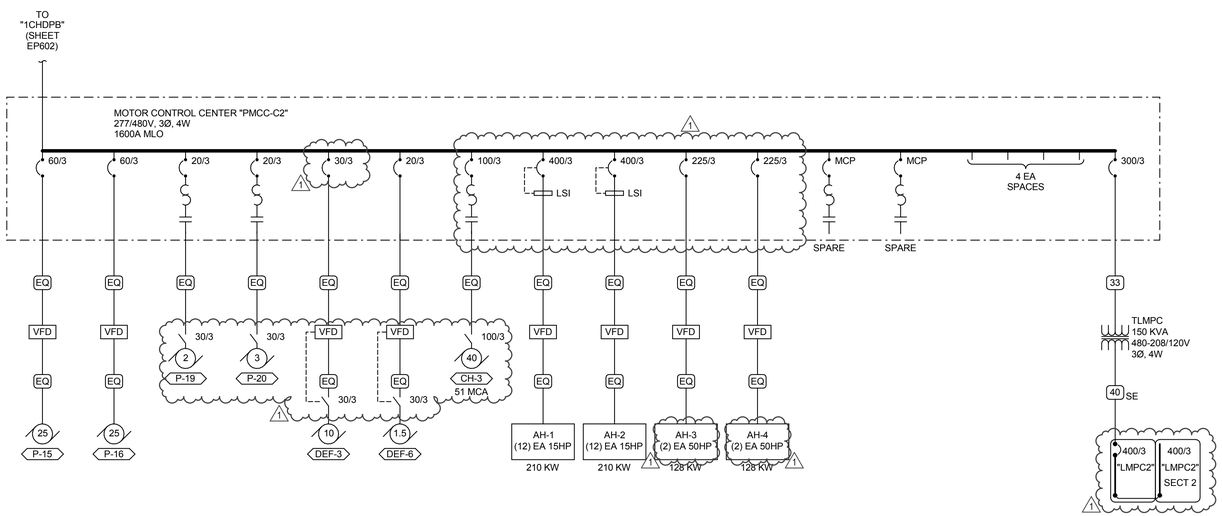

A1 POWER ONE-LINE DIAGRAM - MODULE 2 (d)

SCALE: NTS

CONDUCTOR AND CONDUIT "CC" SCHEDULE

SCHEDULE NUMBER

SUBSCRIPT (NOTE 5)

(E.G.) 5 IG

SYM	AMP	CONDUIT SIZE	CONDUCTOR (NOTE 1) QTY	SIZE	G	IG	SE	NOTES
1	20	.75	2	12	12	12	8	2
2	20	.75	3	12	12	12	8	2,3
3	20	.75	4	12	12	12	8	2,3
4	30	.75	2	10	10	10	8	2
5	30	.75	3	10	10	10	8	2
6	30	.75	4	10	10	10	8	2
7	40	1	2	8	10	8	6	2
8	40	1	3	8	10	8	6	2
9	40	1	4	8	10	8	6	2
10	55	1	2	6	10	8	4	2
11	55	1	3	6	10	8	4	2
12	55	1.25	4	6	10	8	4	2
13	70	1	2	4	8	4	2	2
14	70	1.25	3	4	8	4	2	2
15	70	1.25	4	4	8	4	2	2
16	85	1.25	2	3	8	3	2	2
17	85	1.25	3	3	8	3	2	2
18	85	1.25	4	3	8	3	2	2
19	95	1.25	3	2	8	2	2	2
20	95	1.50	4	2	8	2	2	2
21	130	1.50	3	1	6	2	2	2
22	130	1.50	4	1	6	2	2	2
23	150	2	3	1/0	6	2	1/0	2
24	150	2	4	1/0	6	2	1/0	2
25	175	2	3	2/0	6	2	2/0	2
26	175	2	4	2/0	6	2	2/0	2
27	200	2	3	3/0	6	2	2/0	2
28	200	2.50	4	3/0	6	2	2/0	2
29	230	2.50	3	4/0	4	2	2/0	2
30	230	2.50	4	4/0	4	2	2/0	2
31	255	2.50	3	250	4	1	2/0	2
32	255	2.50	4	250	4	1	2/0	2
33	310	3	3	350	3	1/0	3/0	2
34	310	3	4	350	3	1/0	3/0	2
35	380	3.50	3	500	3	3/0	3/0	2
36	380	4	4	500	3	3/0	3/0	2
37	400	2 EA 2	3	3/0	3	3/0	3/0	2
38	400	2 EA 2.50	4	3/0	3	3/0	3/0	2
39	510	2 EA 2.50	3	250	1	4/0	3/0	2
40	510	2 EA 3	4	250	1	4/0	3/0	2
41	620	2 EA 3	3	350	1/0	4/0	3/0	2,4
42	620	2 EA 3.50	4	350	1/0	4/0	3/0	2,4
43	780	2 EA 3.50	3	500	1/0	4/0	3/0	2,4
44	780	2 EA 4	4	500	1/0	4/0	3/0	2,4
45	855	3 EA 3	3	300	2/0	4/0	3/0	2,4
46	855	3 EA 3	4	300	2/0	4/0	3/0	2,4
47	1000	3 EA 3.50	3	400	2/0	4/0	3/0	4
48	1000	3 EA 3.50	4	400	2/0	4/0	3/0	4
49	1140	3 EA 4	3	500	3/0	4/0	3/0	4
50	1140	3 EA 4	4	500	3/0	4/0	3/0	4
51	1240	4 EA 3	3	350	3/0	4/0	3/0	4
52	1240	4 EA 3	4	350	3/0	4/0	3/0	4
53	1675	5 EA 4	4	400	4/0	4/0	4/0	4
54	2010	6 EA 4	4	400	250	250	250	4
55	2660	7 EA 4	4	500	350	350	350	4
56	3040	8 EA 4	4	500	500	500	500	4
57	4180	11 EA 4	4	500	500	500	500	4
58		5 EA 4						6
59		2 EA 6						6
60		12 EA 6						6

CONDUIT AND CONDUCTOR SCHEDULE NOTES

1. CONDUCTORS SHOWN ARE SHOWN FOR EACH CONDUIT WITH MODIFICATIONS AS NOTED IN NOTE 5. ALL CONDUCTORS SHOWN ARE THWN UNLESS OTHERWISE NOTED.
2. PROVIDE EQUIPMENT GROUND CONDUCTORS PER TABLE 250-122 WHEN CIRCUIT BREAKERS ARE SIZED GREATER THAN AMPERE RATING SHOWN IN TABLE.
3. PROVIDE #10 NEUTRALS FOR MULTIWIRE BRANCH CIRCUITS SERVING COMPUTERS.
4. GROUND (G) CONDUCTOR MAY BE DELETED ON SERVICE ENTRANCE CONDUCTORS.
5. SYMBOL SUBSCRIPTS:

   "IG": INCLUDE IG (INSULATED/ISOLATED GROUND CONDUCTOR) SCHEDULED ALONG WITH THE GROUND OF EQUIPMENT GROUND CONDUCTOR.

   "SE": SUBSTITUTE "SE" CONDUCTOR FOR "G" CONDUCTOR SHOWN, WHICH IS SIZED FOR THE GROUNDING OF THE SECONDARY OF THE SEPARATELY DERIVED SYSTEM.

   "2N": INCLUDE TWO NEUTRAL CONDUCTORS, SIZED AS SCHEDULED FOR PHASED AND NEUTRAL CONDUCTORS.
6. RACEWAY ONLY. CONDUCTORS PROVIDED BY UTILITY.

CRSA
649 E. South Temple
Salt Lake City, UT 84102
801.355.5915

MWL
11798 N. Lakeridge Pkwy.
Ashland, VA 23005
804-228-7473

State of Utah
Department of Administrative Services
Division of Facilities Construction & Management
4110 State Office Building
Salt Lake City, Utah 84114
Phone: (801) 538 - 3018
Fax: (801) 538 - 3267

DFCM APPROVAL STAMP

LICENSED PROFESSIONAL ENGINEER No. 181563 DAVID E. WESEMANN 04-21-2014 STATE OF UTAH

ARCHITECT-ENGINEER STAMP

Unified State Laboratory Module 2

4451 South 2700 West, Taylorsville, UT 84118

DFCM #: 13020300

Project #: B13-024

DATE:	ISSUE TYPE:
April 21, 2014	BID SET

MARK	DATE	DESCRIPTION
1	May 8, 2015	ADDENDUM #1

CHECKED BY	D. WESEMANN
DRAWN BY	DLM

POWER ONE-LINE DIAGRAM - MODULE 2 (d)

EP604

VOLUME 2

C:\Users\dlm\Documents\20130362Elec-Central_DLM (8432).rvt
5/7/2015 5:27:04 PM

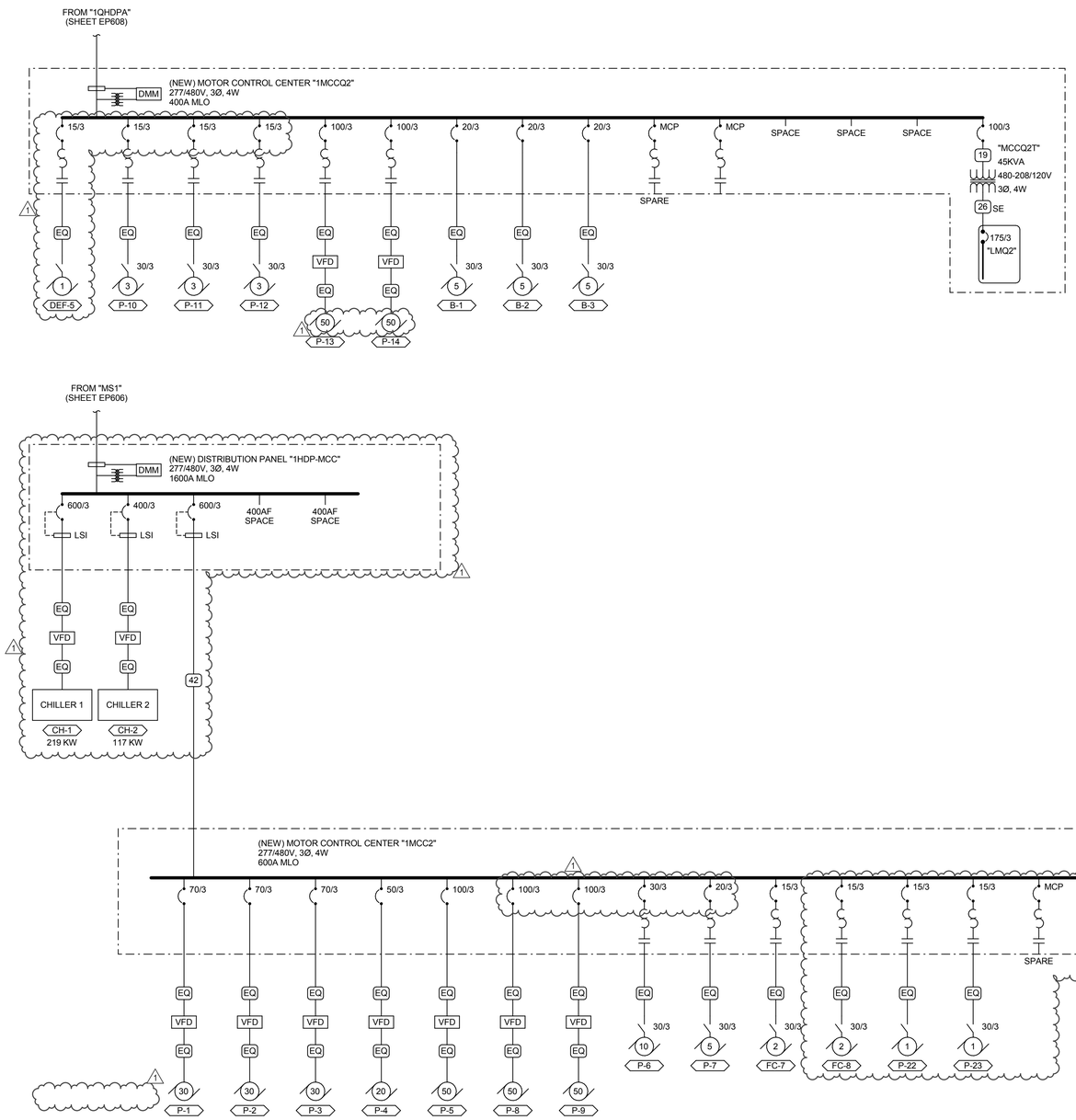

A1 POWER ONE-LINE DIAGRAM - MODULE 2 (e)

SCALE: NTS

GENERAL SHEET NOTES

1. PROVIDE NEMA 3R ENCLOSURES FOR EQUIPMENT LOCATED OUTDOORS. REFER TO PLANS FOR EQUIPMENT LOCATIONS.
2. REFER TO PLANS FOR CONSTRAINTS ON PHYSICAL DIMENSIONS AND CLEARANCE REQUIREMENTS OF EQUIPMENT. PROVIDE EQUIPMENT DIMENSIONS THAT FALL WITHIN THE CONSTRAINTS OF EACH SPECIFIC LOCATION.
3. ALL EQUIPMENT SHALL BE CONSTRUCTED AND BRACED FOR THE SEISMIC CONDITIONS OF THE PROJECT. REFER TO SPECIFICATIONS SECTION 16071 FOR REQUIREMENTS.
4. ALL 120/208V PANELBOARDS SHALL BE PROVIDED WITH 200% NEUTRAL CAPACITY AND AN ISOLATED GROUND BUS IN ADDITION TO THE EQUIPMENT GROUNDING BUS.
5. PROVIDE PERFORMANCE TESTING FOR GROUND-FAULT PROTECTION SYSTEMS ON SITE WITH A WRITTEN RECORD OF THIS TEST SUBMITTED TO THE AUTHORITY HAVING JURISDICTION PER 2011 NEC 230.95(C).

SHEET KEYNOTES

CONDUCTOR AND CONDUIT "CC" SCHEDULE

SCHEDULE NUMBER
SUBSCRIPT (NOTE 5)
(E.G.) 5 IG

SYM	AMP	CONDUIT SIZE	CONDUCTOR (NOTE 1) QTY	SIZE	G	IG	SE	NOTES
1	20	.75	2	12	12	12	8	2
2	20	.75	3	12	12	12	8	2,3
3	20	.75	4	12	12	12	8	2,3
4	30	.75	2	10	10	10	8	2
5	30	.75	3	10	10	10	8	2
6	30	.75	4	10	10	10	8	2
7	40	1	2	8	10	8	6	2
8	40	1	3	8	10	8	6	2
9	40	1	4	8	10	8	6	2
10	55	1	2	6	10	8	4	2
11	55	1	3	6	10	8	4	2
12	55	1.25	4	6	10	8	4	2
13	70	1	2	4	8	4	2	2
14	70	1.25	3	4	8	4	2	2
15	70	1.25	4	4	8	4	2	2
16	85	1.25	2	3	8	3	2	2
17	85	1.25	3	3	8	3	2	2
18	85	1.25	4	3	8	3	2	2
19	95	1.25	3	2	8	2	2	2
20	95	1.50	4	2	8	2	2	2
21	130	1.50	3	1	6	2	2	2
22	130	1.50	4	1	6	2	2	2
23	150	2	3	1/0	6	2	1/0	2
24	150	2	4	1/0	6	2	1/0	2
25	175	2	3	2/0	6	2	2/0	2
26	175	2	4	2/0	6	2	2/0	2
27	200	2	3	3/0	6	2	2/0	2
28	200	2.50	4	3/0	6	2	2/0	2
29	230	2.50	3	4/0	4	2	2/0	2
30	230	2.50	4	4/0	4	2	2/0	2
31	255	2.50	3	250	4	1	2/0	2
32	255	2.50	4	250	4	1	2/0	2
33	310	3	3	350	3	1/0	3/0	2
34	310	3	4	350	3	1/0	3/0	2
35	380	3.50	3	500	3	3/0	3/0	2
36	380	4	4	500	3	3/0	3/0	2
37	400	2 EA 2	3	3/0	3	3/0	3/0	2
38	400	2 EA 2.50	4	3/0	3	3/0	3/0	2
39	510	2 EA 2.50	3	250	1	4/0	3/0	2
40	510	2 EA 3	4	250	1	4/0	3/0	2
41	620	2 EA 3	3	350	1/0	4/0	3/0	2,4
42	620	2 EA 3.50	4	350	1/0	4/0	3/0	2,4
43	780	2 EA 3.50	3	500	1/0	4/0	3/0	2,4
44	780	2 EA 4	4	500	1/0	4/0	3/0	2,4
45	855	3 EA 3	3	300	2/0	4/0	3/0	2,4
46	855	3 EA 3	4	300	2/0	4/0	3/0	2,4
47	1000	3 EA 3.50	3	400	2/0	4/0	3/0	4
48	1000	3 EA 3.50	4	400	2/0	4/0	3/0	4
49	1140	3 EA 4	3	500	3/0	4/0	3/0	4
50	1140	3 EA 4	4	500	3/0	4/0	3/0	4
51	1240	4 EA 3	3	350	3/0	4/0	3/0	4
52	1240	4 EA 3	4	350	3/0	4/0	3/0	4
53	1675	5 EA 4	4	400	4/0	4/0	4/0	4
54	2010	6 EA 4	4	400	250	250	250	4
55	2660	7 EA 4	4	500	350	350	350	4
56	3040	8 EA 4	4	500	500	500	500	4
57	4180	11 EA 4	4	500	500	500	500	4
58		5 EA 4						6
59		2 EA 6						6
60		12 EA 6						6

CONDUIT AND CONDUCTOR SCHEDULE NOTES

1. CONDUCTORS SHOWN ARE SHOWN FOR EACH CONDUIT WITH MODIFICATIONS AS NOTED IN NOTE 5. ALL CONDUCTORS SHOWN ARE THWN UNLESS OTHERWISE NOTED.
2. PROVIDE EQUIPMENT GROUND CONDUCTORS PER TABLE 250-122 WHEN CIRCUIT BREAKERS ARE SIZED GREATER THAN AMPERE RATING SHOWN IN TABLE.
3. PROVIDE #10 NEUTRALS FOR MULTIWIRE BRANCH CIRCUITS SERVING COMPUTERS.
4. GROUND (G) CONDUCTOR MAY BE DELETED ON SERVICE ENTRANCE CONDUCTORS.
5. SYMBOL SUBSCRIPTS:

   "IG": INCLUDE IG (INSULATED/ISOLATED GROUND CONDUCTOR) SCHEDULED ALONG WITH THE GROUND OF EQUIPMENT GROUND CONDUCTOR.

   "SE": SUBSTITUTE "SE" CONDUCTOR FOR "G" CONDUCTOR SHOWN, WHICH IS SIZED FOR THE GROUNDING OF THE SECONDARY OF THE SEPARATELY DERIVED SYSTEM.

   "2N": INCLUDE TWO NEUTRAL CONDUCTORS, SIZED AS SCHEDULED FOR PHASED AND NEUTRAL CONDUCTORS.

6. RACEWAY ONLY. CONDUCTORS PROVIDED BY UTILITY.

CRSA
649 E. South Temple
Salt Lake City, UT 84102
801.355.5915

MWL
11798 N. Lakeridge Pkwy.
Ashland, VA 23005
804-228-7473

State of Utah
Department of Administrative Services
Division of Facilities Construction & Management
4110 State Office Building
Salt Lake City, Utah 84114
Phone: (801) 538 - 3018
Fax: (801) 538 - 3267

DFCM APPROVAL STAMP

No. 181563
DAVID E. WESEMANN
04-21-2014
LICENSED PROFESSIONAL ENGINEER
STATE OF UTAH

ARCHITECT-ENGINEER STAMP

Unified State Laboratory Module 2

4451 South 2700 West, Taylorsville, UT 84118

DFCM #: 13020300

Project #: B13-024

DATE:	ISSUE TYPE:
April 21, 2014	BID SET

MARK	DATE	DESCRIPTION
1	May 8, 2015	ADDENDUM #1

CHECKED BY: D. WESEMANN

DRAWN BY: DLM

POWER ONE-LINE DIAGRAM - MODULE 2 (e)

EP605

VOLUME 2

C:\Users\dlm\Documents\20130620Elec-Central_DLM (84320).rvt
5/7/2015 2:27:10 PM

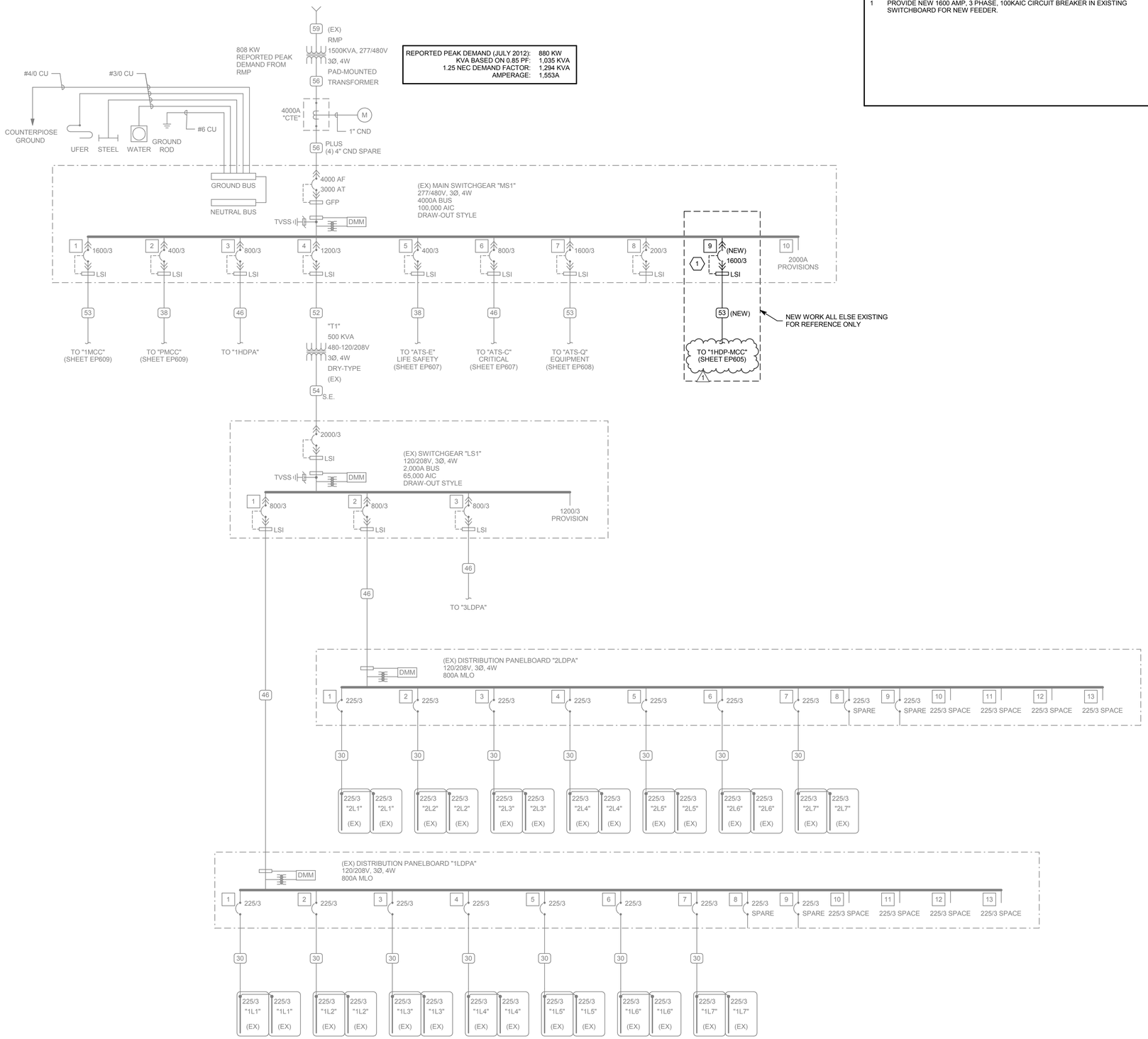

REPORTED PEAK DEMAND (JULY 2012):	880 KW
KVA BASED ON 0.85 PF:	1,035 KVA
1.25 NEC DEMAND FACTOR:	1,294 KVA
AMPERAGE:	1,553A

SHEET KEYNOTES

1 PROVIDE NEW 1600 AMP, 3 PHASE, 100KAIC CIRCUIT BREAKER IN EXISTING SWITCHBOARD FOR NEW FEEDER.

GENERAL SHEET NOTES

1 PROVIDE NEMA 3R ENCLOSURES FOR EQUIPMENT LOCATED OUTDOORS. REFER TO PLANS FOR EQUIPMENT LOCATIONS.

2 REFER TO PLANS FOR CONSTRAINTS ON PHYSICAL DIMENSIONS AND CLEARANCE REQUIREMENTS OF EQUIPMENT. PROVIDE EQUIPMENT DIMENSIONS THAT FALL WITHIN THE CONSTRAINTS OF EACH SPECIFIC LOCATION.

3 ALL EQUIPMENT SHALL BE CONSTRUCTED AND BRACED FOR THE SEISMIC CONDITIONS OF THE PROJECT. REFER TO SPECIFICATIONS SECTION 16071 FOR REQUIREMENTS.

4 ALL 120/208V PANELBOARDS SHALL BE PROVIDED WITH 200% NEUTRAL CAPACITY AND AN ISOLATED GROUND BUS IN ADDITION TO THE EQUIPMENT GROUNDING BUS.

5 PROVIDE PERFORMANCE TESTING FOR GROUND-FAULT PROTECTION SYSTEMS ON SITE WITH A WRITTEN RECORD OF THIS TEST SUBMITTED TO THE AUTHORITY HAVING JURISDICTION PER 2011 NEC 230.95(C).

CONDUCTOR AND CONDUIT "CC" SCHEDULE

SCHEDULE NUMBER
SUBSCRIPT (NOTE 5)
(E.G.) 5 IG

SYM	AMP	CONDUIT SIZE	CONDUCTOR (NOTE 1) QTY	SIZE	G	IG	SE	NOTES
1	20	,75	2	12	12	12	8	2
2	20	,75	3	12	12	12	8	2,3
3	20	,75	4	12	12	12	8	2,3
4	30	,75	2	10	10	10	8	2
5	30	,75	3	10	10	10	8	2
6	30	,75	4	10	10	10	8	2
7	40	1	2	8	10	8	6	2
8	40	1	3	8	10	8	6	2
9	40	1	4	8	10	8	6	2
10	55	1	2	6	10	8	4	2
11	55	1	3	6	10	8	4	2
12	55	1.25	4	6	10	8	4	2
13	70	1	2	4	8	4	2	2
14	70	1.25	3	4	8	4	2	2
15	70	1.25	4	4	8	4	2	2
16	85	1.25	2	3	8	3	2	2
17	85	1.25	3	3	8	3	2	2
18	85	1.25	4	3	8	3	2	2
19	95	1.25	3	2	8	2	2	2
20	95	1.50	4	2	8	2	2	2
21	130	1.50	3	1	6	2	2	2
22	130	1.50	4	1	6	2	2	2
23	150	2	3	1/0	6	2	1/0	2
24	150	2	4	1/0	6	2	1/0	2
25	175	2	3	2/0	6	2	2/0	2
26	175	2	4	2/0	6	2	2/0	2
27	200	2	3	3/0	6	2	2/0	2
28	200	2.50	4	3/0	6	2	2/0	2
29	230	2.50	3	4/0	4	2	2/0	2
30	230	2.50	4	4/0	4	2	2/0	2
31	255	2.50	3	250	4	1	2/0	2
32	255	2.50	4	250	4	1	2/0	2
33	310	3	3	350	3	1/0	3/0	2
34	310	3	4	350	3	1/0	3/0	2
35	380	3.50	3	500	3	3/0	3/0	2
36	380	4	4	500	3	3/0	3/0	2
37	400	2 EA 2	3	3/0	3	3/0	3/0	2
38	400	2 EA 2.50	4	3/0	3	3/0	3/0	2
39	510	2 EA 2.50	3	250	1	4/0	3/0	2
40	510	2 EA 3	4	250	1	4/0	3/0	2
41	620	2 EA 3	3	350	1/0	4/0	3/0	2,4
42	620	2 EA 3.50	4	350	1/0	4/0	3/0	2,4
43	780	2 EA 3.50	3	500	1/0	4/0	3/0	2,4
44	780	2 EA 4	4	500	1/0	4/0	3/0	2,4
45	855	3 EA 3	3	300	2/0	4/0	3/0	2,4
46	855	3 EA 3	4	300	2/0	4/0	3/0	2,4
47	1000	3 EA 3.50	3	400	2/0	4/0	3/0	4
48	1000	3 EA 3.50	4	400	2/0	4/0	3/0	4
49	1140	3 EA 4	3	500	3/0	4/0	3/0	4
50	1140	3 EA 4	4	500	3/0	4/0	3/0	4
51	1240	4 EA 3	3	350	3/0	4/0	3/0	4
52	1240	4 EA 3	4	350	3/0	4/0	3/0	4
53	1675	5 EA 4	4	400	4/0	4/0	4/0	4
54	2010	6 EA 4	4	400	250	250	250	4
55	2660	7 EA 4	4	500	350	350	350	4
56	3040	8 EA 4	4	500	500	500	500	4
57	4180	11 EA 4	4	500	500	500	500	4
58		5 EA 4						6
59		2 EA 6						6
60		12 EA 6						6

CONDUIT AND CONDUCTOR SCHEDULE NOTES

1. CONDUCTORS SHOWN ARE SHOWN FOR EACH CONDUIT WITH MODIFICATIONS AS NOTED IN NOTE 5. ALL CONDUCTORS SHOWN ARE THWN UNLESS OTHERWISE NOTED.
2. PROVIDE EQUIPMENT GROUND CONDUCTORS PER TABLE 250-122 WHEN CIRCUIT BREAKERS ARE SIZED GREATER THAN AMPERE RATING SHOWN IN TABLE.
3. PROVIDE #10 NEUTRALS FOR MULTIWIRE BRANCH CIRCUITS SERVING COMPUTERS.
4. GROUND (G) CONDUCTOR MAY BE DELETED ON SERVICE ENTRANCE CONDUCTORS.
5. SYMBOL SUBSCRIPTS:
   "IG": INCLUDE IG (INSULATED/ISOLATED GROUND CONDUCTOR) SCHEDULED ALONG WITH THE GROUND OF EQUIPMENT GROUND CONDUCTOR.
   "SE": SUBSTITUTE "SE" CONDUCTOR FOR "G" CONDUCTOR SHOWN, WHICH IS SIZED FOR THE GROUNDING OF THE SECONDARY OF THE SEPARATELY DERIVED SYSTEM.
   "2N": INCLUDE TWO NEUTRAL CONDUCTORS, SIZED AS SCHEDULED FOR PHASED AND NEUTRAL CONDUCTORS.
6. RACEWAY ONLY. CONDUCTORS PROVIDED BY UTILITY.

A1 EXISTING POWER ONE-LINE DIAGRAM - MODULE 1 (a)
SCALE: NTS

CRSA
649 E. South Temple
Salt Lake City, UT 84102
801.355.5915

MWL
11798 N. Lakeridge Pkwy.
Ashland, VA 23005
804-228-7473

State of Utah
Department of Administrative Services
Division of Facilities Construction & Management
4110 State Office Building
Salt Lake City, Utah 84114
Phone: (801) 538 - 3018
Fax: (801) 538 - 3267

DFCM APPROVAL STAMP

LICENSED PROFESSIONAL ENGINEER
No. 181563
DAVID E. WESEMANN
04-21-2014
STATE OF UTAH

ARCHITECT-ENGINEER STAMP

Unified State Laboratory Module 2

4451 South 2700 West, Taylorsville, UT 84118

DFCM #: 13020300
Project #: B13-024

DATE:	ISSUE TYPE:
April 21, 2014	BID SET

MARK	DATE	DESCRIPTION
1	May 8, 2015	ADDENDUM #1

CHECKED BY	D. WESEMANN
DRAWN BY	DLM

EXISTING POWER ONE-LINE DIAGRAM - MODULE 1 (a)

EP606

VOLUME 2

C:\Users\dlm\Documents\2013\3622Elec-Central_DLM (8432).rvt
5/7/2015 5:27:16 PM

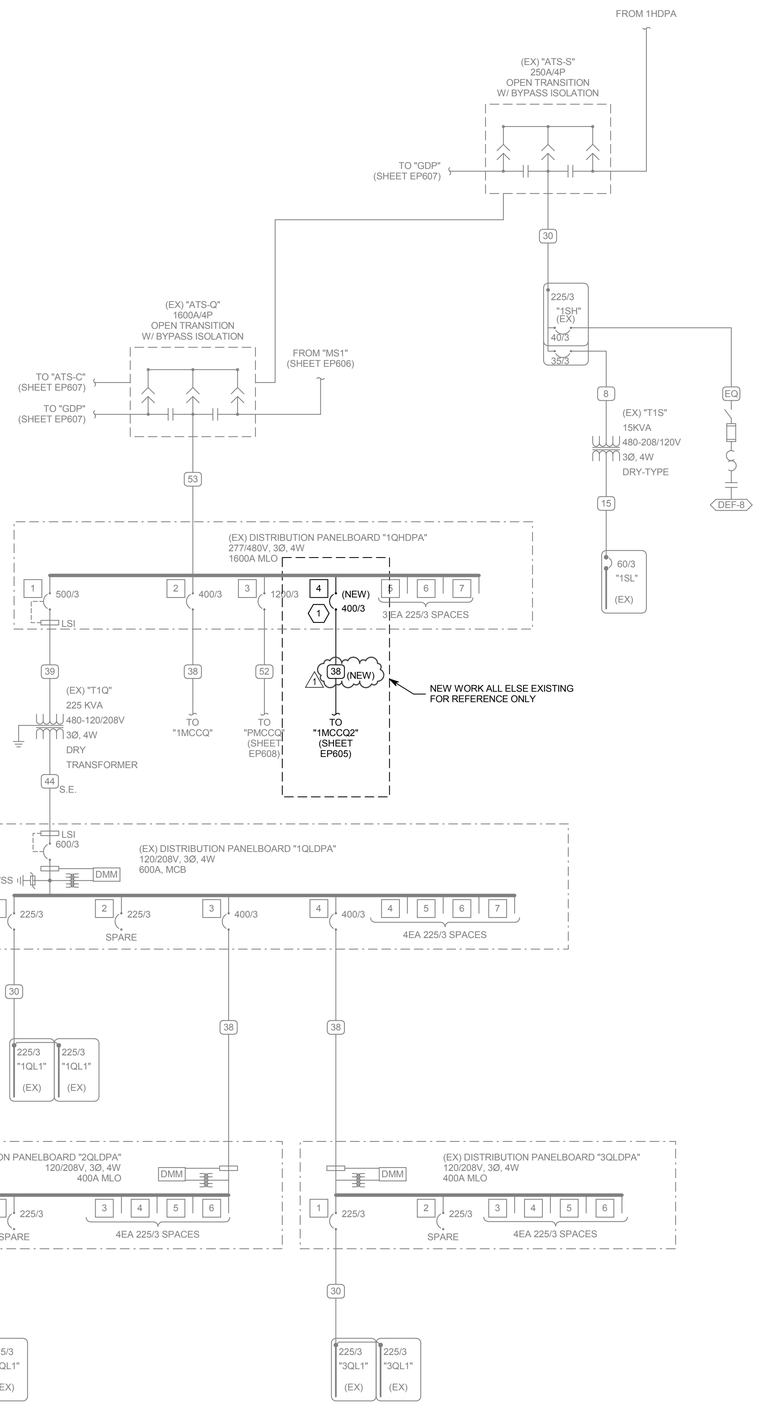

A1 EXISTING POWER ONE-LINE DIAGRAM - MODULE 1 (c)

SCALE: NTS

SHEET KEYNOTES

1 PROVIDE NEW 400 AMP, 3 PHASE, 100KAIC CIRCUIT BREAKER IN EXISTING PANELBOARD.

GENERAL SHEET NOTES

1 PROVIDE NEMA 3R ENCLOSURES FOR EQUIPMENT LOCATED OUTDOORS. REFER TO PLANS FOR EQUIPMENT LOCATIONS.

2 REFER TO PLANS FOR CONSTRAINTS ON PHYSICAL DIMENSIONS AND CLEARANCE REQUIREMENTS OF EQUIPMENT. PROVIDE EQUIPMENT DIMENSIONS THAT FALL WITHIN THE CONSTRAINTS OF EACH SPECIFIC LOCATION.

3 ALL EQUIPMENT SHALL BE CONSTRUCTED AND BRACED FOR THE SEISMIC CONDITIONS OF THE PROJECT. REFER TO SPECIFICATIONS SECTION 16071 FOR REQUIREMENTS.

4 ALL 120/208V PANELBOARDS SHALL BE PROVIDED WITH 200% NEUTRAL CAPACITY AND AN ISOLATED GROUND BUS IN ADDITION TO THE EQUIPMENT GROUNDING BUS.

5 PROVIDE PERFORMANCE TESTING FOR GROUND-FAULT PROTECTION SYSTEMS ON SITE WITH A WRITTEN RECORD OF THIS TEST SUBMITTED TO THE AUTHORITY HAVING JURISDICTION PER 2011 NEC 230.95(C).

CONDUCTOR AND CONDUIT "CC" SCHEDULE

SCHEDULE NUMBER
SUBSCRIPT (NOTE 5)
(E.G.) 5 IG

SYM	AMP	CONDUIT SIZE	CONDUCTOR (NOTE 1) QTY	SIZE	G	IG	SE	NOTES
1	20	.75	2	12	12	12	8	2
2	20	.75	3	12	12	12	8	2,3
3	20	.75	4	12	12	12	8	2,3
4	30	.75	2	10	10	10	8	2
5	30	.75	3	10	10	10	8	2
6	30	.75	4	10	10	10	8	2
7	40	1	2	8	10	8	6	2
8	40	1	3	8	10	8	6	2
9	40	1	4	8	10	8	6	2
10	55	1	2	6	10	8	4	2
11	55	1	3	6	10	8	4	2
12	55	1.25	4	6	10	8	4	2
13	70	1	2	4	8	4	2	2
14	70	1.25	3	4	8	4	2	2
15	70	1.25	4	4	8	4	2	2
16	85	1.25	2	3	8	3	2	2
17	85	1.25	3	3	8	3	2	2
18	85	1.25	4	3	8	3	2	2
19	95	1.25	3	2	8	2	2	2
20	95	1.50	4	2	8	2	2	2
21	130	1.50	3	1	6	2	2	2
22	130	1.50	4	1	6	2	2	2
23	150	2	3	1/0	6	2	1/0	2
24	150	2	4	1/0	6	2	1/0	2
25	175	2	3	2/0	6	2	2/0	2
26	175	2	4	2/0	6	2	2/0	2
27	200	2	3	3/0	6	2	2/0	2
28	200	2.50	4	3/0	6	2	2/0	2
29	230	2.50	3	4/0	4	2	2/0	2
30	230	2.50	4	4/0	4	2	2/0	2
31	255	2.50	3	250	4	1	2/0	2
32	255	2.50	4	250	4	1	2/0	2
33	310	3	3	350	3	1/0	3/0	2
34	310	3	4	350	3	1/0	3/0	2
35	380	3.50	3	500	3	3/0	3/0	2
36	380	4	4	500	3	3/0	3/0	2
37	400	2 EA 2	3	3/0	3	3/0	3/0	2
38	400	2 EA 2.50	4	3/0	3	3/0	3/0	2
39	510	2 EA 2.50	3	250	1	4/0	3/0	2
40	510	2 EA 3	4	250	1	4/0	3/0	2
41	620	2 EA 3	3	350	1/0	4/0	3/0	2,4
42	620	2 EA 3.50	4	350	1/0	4/0	3/0	2,4
43	780	2 EA 3.50	3	500	1/0	4/0	3/0	2,4
44	780	2 EA 4	4	500	1/0	4/0	3/0	2,4
45	855	3 EA 3	3	300	2/0	4/0	3/0	2,4
46	855	3 EA 3	4	300	2/0	4/0	3/0	2,4
47	1000	3 EA 3.50	3	400	2/0	4/0	3/0	4
48	1000	3 EA 3.50	4	400	2/0	4/0	3/0	4
49	1140	3 EA 4	3	500	3/0	4/0	3/0	4
50	1140	3 EA 4	4	500	3/0	4/0	3/0	4
51	1240	4 EA 3	3	350	3/0	4/0	3/0	4
52	1240	4 EA 3	4	350	3/0	4/0	3/0	4
53	1675	5 EA 4	4	400	4/0	4/0	4/0	4
54	2010	6 EA 4	4	400	250	250	250	4
55	2660	7 EA 4	4	500	350	350	350	4
56	3040	8 EA 4	4	500	500	500	500	4
57	4180	11 EA 4	4	500	500	500	500	4
58		5 EA 4						6
59		2 EA 6						6
60		12 EA 6						6

CONDUIT AND CONDUCTOR SCHEDULE NOTES

1. CONDUCTORS SHOWN ARE SHOWN FOR EACH CONDUIT WITH MODIFICATIONS AS NOTED IN NOTE 5. ALL CONDUCTORS SHOWN ARE THWN UNLESS OTHERWISE NOTED.
2. PROVIDE EQUIPMENT GROUND CONDUCTORS PER TABLE 250-122 WHEN CIRCUIT BREAKERS ARE SIZED GREATER THAN AMPERE RATING SHOWN IN TABLE.
3. PROVIDE #10 NEUTRALS FOR MULTIWIRE BRANCH CIRCUITS SERVING COMPUTERS.
4. GROUND (G) CONDUCTOR MAY BE DELETED ON SERVICE ENTRANCE CONDUCTORS.
5. SYMBOL SUBSCRIPTS:
   - "IG": INCLUDE IG (INSULATED/ISOLATED GROUND CONDUCTOR) SCHEDULED ALONG WITH THE GROUND OF EQUIPMENT GROUND CONDUCTOR.
   - "SE": SUBSTITUTE "SE" CONDUCTOR FOR "G" CONDUCTOR SHOWN, WHICH IS SIZED FOR THE GROUNDING OF THE SECONDARY OF THE SEPARATELY DERIVED SYSTEM.
   - "2N": INCLUDE TWO NEUTRAL CONDUCTORS, SIZED AS SCHEDULED FOR PHASED AND NEUTRAL CONDUCTORS.
6. RACEWAY ONLY. CONDUCTORS PROVIDED BY UTILITY.

CRSA
649 E. South Temple
Salt Lake City, UT 84102
801.355.5915

MWL
11798 N. Lakeridge Pkwy.
Ashland, VA 23005
804-228-7473

State of Utah
Department of Administrative Services
Division of Facilities Construction & Management
4110 State Office Building
Salt Lake City, Utah 84114
Phone: (801) 538 - 3018
Fax: (801) 538 - 3267

DFCM APPROVAL STAMP

LICENSED PROFESSIONAL ENGINEER
No. 181563
DAVID E. WESEMANN
04-21-2014
STATE OF UTAH

ARCHITECT-ENGINEER STAMP

Unified State Laboratory Module 2

4451 South 2700 West, Taylorsville, UT 84118

DFCM #: 13020300

Project #: B13-024

DATE:	ISSUE TYPE:
April 21, 2014	BID SET

MARK	DATE	DESCRIPTION
1	May 8, 2015	ADDENDUM #1

CHECKED BY: D. WESEMANN
DRAWN BY: DLM

EXISTING POWER ONE-LINE DIAGRAM - MODULE 1 (c)

EP608

VOLUME 2

C:\Users\dlm\Documents\2013\3622Elec-Central_DLM (8432).rvt
5/7/2015 2:27:22 PM

SHEET KEYNOTES

1 PROVIDE NEW 65KAIC CIRCUIT BREAKERS IN EXISITNG MCC.

GENERAL SHEET NOTES

1 PROVIDE NEMA 3R ENCLOSURES FOR EQUIPMENT LOCATED OUTDOORS. REFER TO PLANS FOR EQUIPMENT LOCATIONS.

2 REFER TO PLANS FOR CONSTRAINTS ON PHYSICAL DIMENSIONS AND CLEARANCE REQUIREMENTS OF EQUIPMENT. PROVIDE EQUIPMENT DIMENSIONS THAT FALL WITHIN THE CONSTRAINTS OF EACH SPECIFIC LOCATION.

3 ALL EQUIPMENT SHALL BE CONSTRUCTED AND BRACED FOR THE SEISMIC CONDITIONS OF THE PROJECT. REFER TO SPECIFICATIONS SECTION 16071 FOR REQUIREMENTS.

4 ALL 120/208V PANELBOARDS SHALL BE PROVIDED WITH 200% NEUTRAL CAPACITY AND AN ISOLATED GROUND BUS IN ADDITION TO THE EQUIPMENT GROUNDING BUS.

5 PROVIDE PERFORMANCE TESTING FOR GROUND-FAULT PROTECTION SYSTEMS ON SITE WITH A WRITTEN RECORD OF THIS TEST SUBMITTED TO THE AUTHORITY HAVING JURISDICTION PER 2011 NEC 230.95(C).

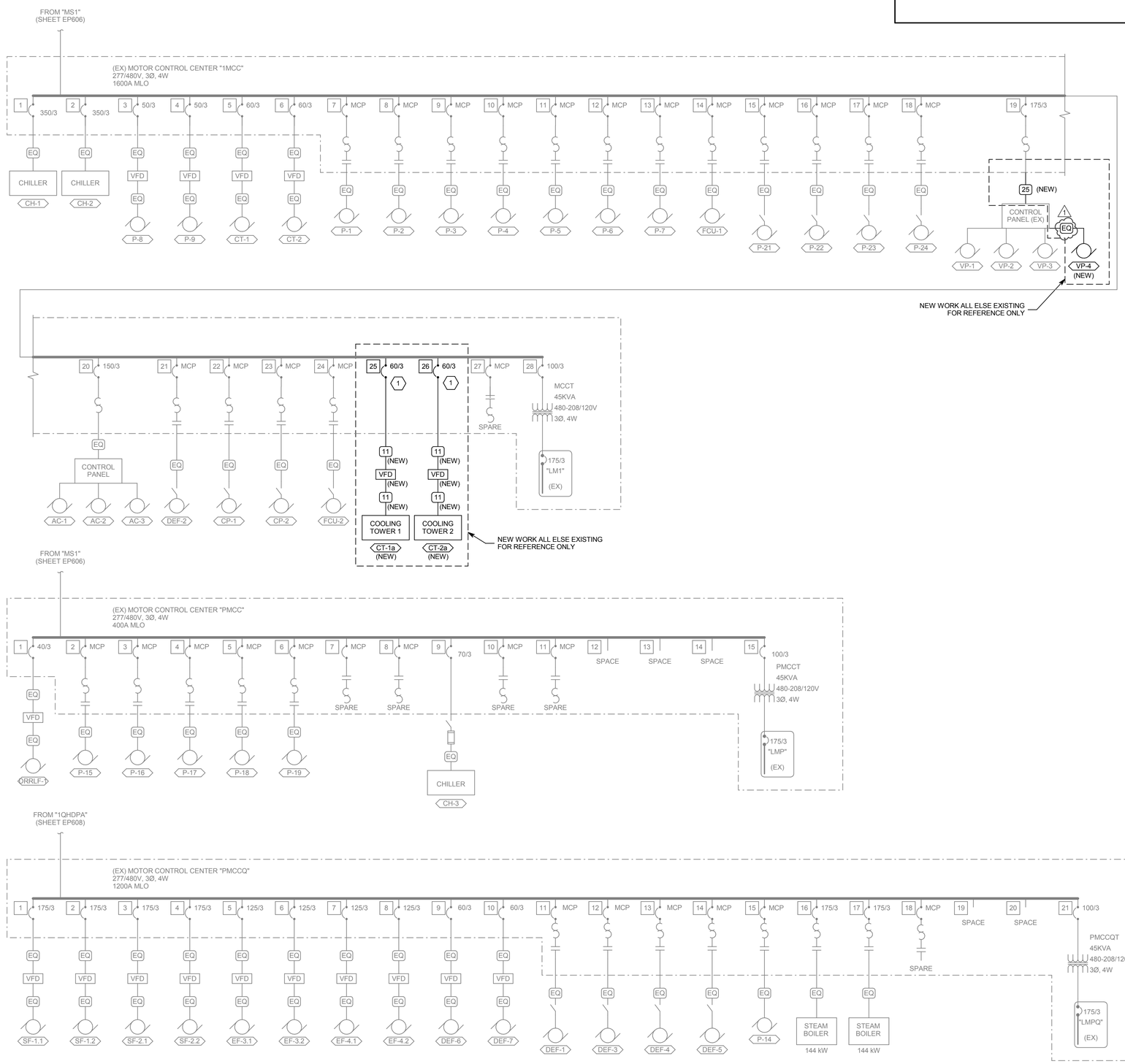

A1 EXISTING POWER ONE-LINE DIAGRAM - MODULE 1 (d)

SCALE: NTS

CONDUCTOR AND CONDUIT "CC" SCHEDULE

SCHEDULE NUMBER
SUBSCRIPT (NOTE 5)
(E.G.) 5 IG

SYM	AMP	CONDUIT SIZE	CONDUCTOR (NOTE 1) QTY	SIZE	G	IG	SE	NOTES
1	20	,75	2	12	12	12	8	2
2	20	,75	3	12	12	12	8	2,3
3	20	,75	4	12	12	12	8	2,3
4	30	,75	2	10	10	10	8	2
5	30	,75	3	10	10	10	8	2
6	30	,75	4	10	10	10	8	2
7	40	1	2	8	10	8	6	2
8	40	1	3	8	10	8	6	2
9	40	1	4	8	10	8	6	2
10	55	1	2	6	10	8	4	2
11	55	1	3	6	10	8	4	2
12	55	1.25	4	6	10	8	4	2
13	70	1	2	4	8	4	2	2
14	70	1.25	3	4	8	4	2	2
15	70	1.25	4	4	8	4	2	2
16	85	1.25	2	3	8	3	2	2
17	85	1.25	3	3	8	3	2	2
18	85	1.25	4	3	8	3	2	2
19	95	1.25	3	2	8	2	2	2
20	95	1.50	4	2	8	2	2	2
21	130	1.50	3	1	6	2	2	2
22	130	1.50	4	1	6	2	2	2
23	150	2	3	1/0	6	2	1/0	2
24	150	2	4	1/0	6	2	1/0	2
25	175	2	3	2/0	6	2	2/0	2
26	175	2	4	2/0	6	2	2/0	2
27	200	2	3	3/0	6	2	2/0	2
28	200	2.50	4	3/0	6	2	2/0	2
29	230	2.50	3	4/0	4	2	2/0	2
30	230	2.50	4	4/0	4	2	2/0	2
31	255	2.50	3	250	4	1	2/0	2
32	255	2.50	4	250	4	1	2/0	2
33	310	3	3	350	3	1/0	3/0	2
34	310	3	4	350	3	1/0	3/0	2
35	380	3.50	3	500	3	3/0	3/0	2
36	380	4	4	500	3	3/0	3/0	2
37	400	2 EA 2	3	3/0	3	3/0	3/0	2
38	400	2 EA 2.50	4	3/0	3	3/0	3/0	2
39	510	2 EA 2.50	3	250	1	4/0	3/0	2
40	510	2 EA 3	4	250	1	4/0	3/0	2
41	620	2 EA 3	3	350	1/0	4/0	3/0	2,4
42	620	2 EA 3.50	4	350	1/0	4/0	3/0	2,4
43	780	2 EA 3.50	3	500	1/0	4/0	3/0	2,4
44	780	2 EA 4	4	500	1/0	4/0	3/0	2,4
45	855	3 EA 3	3	300	2/0	4/0	3/0	2,4
46	855	3 EA 3	4	300	2/0	4/0	3/0	2,4
47	1000	3 EA 3.50	3	400	2/0	4/0	3/0	4
48	1000	3 EA 3.50	4	400	2/0	4/0	3/0	4
49	1140	3 EA 4	3	500	3/0	4/0	3/0	4
50	1140	3 EA 4	4	500	3/0	4/0	3/0	4
51	1240	4 EA 3	3	350	3/0	4/0	3/0	4
52	1240	4 EA 3	4	350	3/0	4/0	3/0	4
53	1675	5 EA 4	4	400	4/0	4/0	4/0	4
54	2010	6 EA 4	4	400	250	250	250	4
55	2660	7 EA 4	4	500	350	350	350	4
56	3040	8 EA 4	4	500	500	500	500	4
57	4180	11 EA 4	4	500	500	500	500	4
58		5 EA 4						6
59		2 EA 6						6
60		12 EA 6						6

CONDUIT AND CONDUCTOR SCHEDULE NOTES

1. CONDUCTORS SHOWN ARE SHOWN FOR EACH CONDUIT WITH MODIFICATIONS AS NOTED IN NOTE 5. ALL CONDUCTORS SHOWN ARE THWN UNLESS OTHERWISE NOTED.
2. PROVIDE EQUIPMENT GROUND CONDUCTORS PER TABLE 250-122 WHEN CIRCUIT BREAKERS ARE SIZED GREATER THAN AMPERE RATING SHOWN IN TABLE.
3. PROVIDE #10 NEUTRALS FOR MULTIWIRE BRANCH CIRCUITS SERVING COMPUTERS.
4. GROUND (G) CONDUCTOR MAY BE DELETED ON SERVICE ENTRANCE CONDUCTORS.
5. SYMBOL SUBSCRIPTS:

   "IG": INCLUDE IG (INSULATED/ISOLATED GROUND CONDUCTOR) SCHEDULED ALONG WITH THE GROUND OF EQUIPMENT GROUND CONDUCTOR.

   "SE": SUBSTITUTE "SE" CONDUCTOR FOR "G" CONDUCTOR SHOWN, WHICH IS SIZED FOR THE GROUNDING OF THE SECONDARY OF THE SEPARATELY DERIVED SYSTEM.

   "2N": INCLUDE TWO NEUTRAL CONDUCTORS, SIZED AS SCHEDULED FOR PHASED AND NEUTRAL CONDUCTORS.

6. RACEWAY ONLY. CONDUCTORS PROVIDED BY UTILITY.

CRSA
649 E. South Temple
Salt Lake City, UT 84102
801.355.5915

MWL
11798 N. Lakeridge Pkwy.
Ashland, VA 23005
804-228-7473

State of Utah
Department of Administrative Services
Division of Facilities Construction & Management
4110 State Office Building
Salt Lake City, Utah 84114
Phone: (801) 538 - 3018
Fax: (801) 538 - 3267

DFCM APPROVAL STAMP

LICENSED PROFESSIONAL ENGINEER No. 181563 DAVID E. WESEMANN 04-21-2014 STATE OF UTAH

ARCHITECT-ENGINEER STAMP

Unified State Laboratory Module 2

4451 South 2700 West, Taylorsville, UT 84118

DFCM #: 13020300

Project #: B13-024

DATE:	ISSUE TYPE:
April 21, 2014	BID SET

MARK	DATE	DESCRIPTION
1	May 8, 2015	ADDENDUM #1

CHECKED BY: D. WESEMANN
DRAWN BY: DLM

EXISTING POWER ONE-LINE DIAGRAM - MODULE 1 (d)

EP609

VOLUME 2

C:\Users\dlm\Documents\2013\362\Elec-Central_DLM (8432).rvt
5/7/2015 5:27:28 PM

LAB EQUIPMENT SCHEDULE

ITEM NO.	QTY	DECSRIPTION	SCHEDULE REMARKS	ELEC. CONN.	VOLT	PH	AMPS	CONDUIT & CONDUCTOR	CIRCUIT BREAKER SIZE	NOTES
B7	1	AUTOCLAVE (TUTTNAUER - BRINKMAN / 3870 EL)		SPR	208 V	3	17	CC #2	20/3	
B9-A	1	LEVEL 2 WALK-IN FREEZER - EVAPORATOR		JB	120 V	1	16	CC #2	20/1	1,2
B9-B	1	LEVEL 2 WALK-IN FREEZER - EVAPORATOR (REDUNDANT)		JB	120 V	1	16	CC #2	20/1	1,2
B9-C	1	LEVEL 2 WALK-IN FREEZER - CONDENSER		JB	208 V	3	15	CC #2	20/3	1,2
B9-D	1	LEVEL 2 WALK-IN FREEZER - CONDENSER (REDUNDANT)		JB	208 V	3	15	CC #2	20/3	1,2
B14	1	UV PASS-THRU		JB	120 V	1	15	CC #2	20/1	
BA2	1	FLUOROPHOS / FLUOROMETER	SHARES CIRCUIT WITH BA3	SPR	208 V	2	1	CC #2	20/2	
BA3	1	FLUOROPHOS / HEATING BLOCK	SHARES CIRCUIT WITH BA2	SPR	208 V	2	1	CC #2	20/2	
BA9-A	1	AUTOCLAVE		JB	208 V	3	60	CC #14	70/3	
BA9-B	1	AUTOCLAVE		JB	208 V	3	50	CC #14	60/3	
C1	2	GC-MS W/PYROLYZER		SPR	208 V	2	15	CC #2	20/2	
C2	4	GC-MS		SPR	208 V	2	15	CC #2	20/2	
C2A	2	GC-MS		SPR	208 V	2	15	CC #2	20/2	
CH1	2	ICP-OES (PERKIN ELMER / 3300 DV)		SPR	208 V	2	28	CC #4	30/2	
CH2a	1	ICP-MS (AGILENT / 7700 X)		SPR	208 V	2	24	CC #4	30/2	
CH2b	1	12.2 AMP CHILLER		SPR	208 V	2	12	CC #2	20/2	
CH2c	1	20 AMP CHILLER		SPR	208 V	2	20	CC #4	20/2	
CH4	2	MICROWAVE DIGESTION SYSTEM		SPR	208 V	2	15	CC #2	20/2	
CH6	2	FURNACE, 315D		SPR	208 V	2	21	CC #4	30/2	
CH7	1	FAT EXTRACTOR		SPR	208 V	2	14	CC #2	20/2	
CH9	1	NITROGEN ANALYZER		SPR	208 V	2	6	CC #2	20/2	
CH13	1	GLASSWARE WASHER		SPR	208 V	2	10	CC #2	20/2	
FA8	1	PROJECTILE RECOVERY TANK		JB	120 V	1	30	CC #7	40/1	3
FH4-1	4	FUME HOOD (FISHER HAMILTON CONCEPT)		JB	120 V	1	16	CC #2	20/1	
FH4-ADA	2	FUME HOOD (FISHER HAMILTON CONCEPT)		JB	120 V	1	16	CC #2	20/1	
FH5-1	1	FUME HOOD (FISHER HAMILTON CONCEPT)		JB	120 V	1	16	CC #2	20/1	
FH5-ADA	2	FUME HOOD (FISHER HAMILTON CONCEPT)		JB	120 V	1	16	CC #2	20/1	
FH6-1	7	FUME HOOD (FISHER HAMILTON CONCEPT)		JB	120 V	1	16	CC #2	20/1	
FH6-3	1	FUME HOOD (FISHER HAMILTON CONCEPT)		JB	120 V	1	16	CC #2	20/1	
FH6-ADA	7	FUME HOOD (FISHER HAMILTON CONCEPT)		JB	120 V	1	16	CC #2	20/1	
FH8-1	3	FUME HOOD (FISHER HAMILTON SAFE-AIRE II)		JB	120 V	1	16	CC #2	20/1	
FH8-ADA	1	FUME HOOD (FISHER HAMILTON CONCEPT)		JB	120 V	1	16	CC #2	20/1	
GW	5	GLASSWARE WASHER		SPR	208 V	3	20	CC #5	20/3	
ID4	1	SUPER GLUE CABINET (CYANOACRYLATE FUMING CHAMBER)		JB	120 V	1	16	CC #2	20/1	
ME1	7	BACKDRAFT AUTOPSY STATION (DISPOSAL)	2HP MOTOR GRINDER	JB	120 V	1	24	CC #7	40/1	
ME5	1	RECESSED BODY SCALE		JB	120 V	1	15	CC #2	20/1	1
ME7-A	1	MAIN BODY COOLER - EVAPORATOR		JB	120 V	1	16	CC #2	20/1	1,2
ME7-B	1	MAIN BODY COOLER - EVAPORATOR (REDUNDANT)		JB	120 V	1	16	CC #2	20/1	1,2
ME7-C	1	MAIN BODY COOLER - EVAPORATOR 2		JB	120 V	1	16	CC #2	20/1	1,2
ME7-D	1	MAIN BODY COOLER - EVAPORATOR (REDUNDANT) 2		JB	120 V	1	16	CC #2	20/1	1,2
ME7-E	1	BODY COOLER - CONDENSER		JB	208 V	3	45	CC #14	70/3	1,2
ME7-F	1	BODY COOLER - CONDENSER (REDUNDANT)		JB	208 V	3	45	CC #14	70/3	1,2
ME7-G	1	MAIN BODY COOLER - DESICCANT DRYER		JB	208 V	3	20	CC #5	30/3	1,2
ME8-A	1	SPECIAL PROCEDURE COOLER - EVAPORATOR		JB	120 V	1	16	CC #2	20/1	1,2
ME8-B	1	SPECIAL PROCEDURE COOLER - EVAPORATOR (REDUNDANT)		JB	120 V	1	16	CC #2	20/1	1,2
ME8-C	1	SPECIAL PROCEDURE COOLER - CONDENSER		JB	208 V	3	11	CC #2	20/3	1,2
ME8-D	1	SPECIAL PROCEDURE COOLER - CONDENSER (REDUNDANT)		JB	208 V	3	11	CC #2	20/3	1,2
ME8-E	1	SPECIAL PROCEDURE COOLER - DESICCANT DRYER		JB	208 V	3	20	CC #5	30/3	1,2
ME9-A	1	DECOMP BODY FREEZER - EVAPORATOR		JB	120 V	1	16	CC #2	20/1	1,2
ME9-B	1	DECOMP BODY FREEZER - EVAPORATOR (REDUNDANT		JB	120 V	1	16	CC #2	20/1	1,2
ME9-C	1	DECOMP BODY FREEZER - CONDENSER		JB	208 V	3	38	CC #11	50/3	1,2
ME9-D	1	DECOMP BODY FREEZER - CONDENSER (REDUNDANT)		JB	208 V	3	38	CC #11	50/3	1,2
ME13	2	WASHER EXTRACTOR		SPR	208 V	3	4	CC #2	20/3	
ME14	1	COMMERCIAL DRYER - STACKING		SPR	208 V	3	26	CC #5	30/3	
ME24	1	DENTAL X-RAY		JB	120 V	1	15	CC #2	20/1	
ME25-A	1	XRAY MACHINE (FUTURE)		JB	480 V	3	56	CC #20	100/3	
ME25-B	1	XRAY MACHINE (STATSCAN ASP)		JB	208 V	2	10	CC #2	20/2	
ME25-C	1	XRAY MACHINE (STATSCAN GURNEY)		JB	208 V	2	10	CC #2	20/2	
MT1	1	KJELDAHL UNIT		SPR	208 V	2	16	CC #2	20/2	
MT2	1	OVEN (THERMOLYNE; MODEL F6020)		SPR	208 V	2	17	CC #4	30/2	
MT5	1	FURNACE		SPR	208 V	2	18	CC #4	30/2	
P2	1	AUTOCLAVE (TUTTNAUER / 3870EA)		SPR	208 V	2	21	CC #4	30/2	
PC1	6	GAS CHROMATOGRAPH W/ AUTO INJECTOR		SPR	208 V	2	10	CC #2	20/2	1
PC2	2	GAS CHROMATOGRAPH W/ AUTO INJECTOR		SPR	208 V	2	5	CC #2	20/2	1
PC3	2	GAS CHROMATOGRAPH MASS SPECTROMETER W/ AUTO INJECTOR		SPR	208 V	2	21	CC #4	30/2	1
PC4	2	TRIPLE QUAD LC-MS		SPR	208 V	2	15	CC #2	20/2	1
PC7	1	FURNACE (LINDVERG HEAVY DUTY) EXISTING		SPR	208 V	2	23	CC #4	30/2	
PC11	4	TRIPLE QUAD LC-MS (FUTURE)		SPR	208 V	2	15	CC #2	20/2	
PC15	2	TRIPLE QUAD GC-MS (FUTURE)		SPR	208 V	2	10	CC #2	20/2	1

LAB EQUIPMENT SCHEDULE NOTES:
1. ON EMERGENCY POWER.
2. CONNECT CIRCUIT TO SINGLE POINT OF CONNECTION. COORDINATE EXACT LOCATION WITH REFRIGERATION EQUIPMENT SUPPLIER PRIOR TO ROUGH-IN.
3. PROVIDE 30 MA GFCI CIRCUIT BREAKER AS OCP IN ASSOCIATED PANELBOARD.

LAB EQUIPMENT SCHEDULE KEY

CC #X	SEE CONDUCTOR AND CONDUIT SCHEDULE FOR WIRE SIZE AND QUANTITY AND CONDUIT SIZE.
JB	JUNCTION BOX.
SPR	SPECIAL RECEPTACLE; COORDINATE TYPE WITH EQUIPMENT.

CONDUCTOR AND CONDUIT "CC" SCHEDULE

SCHEDULE NUMBER
SUBSCRIPT (NOTE 5)
(E.G.) 5 IG

SYM	AMP	CONDUIT SIZE	CONDUCTOR (NOTE 1) QTY	SIZE	G	IG	SE	NOTES
1	20	.75	2	12	12	12	8	2
2	20	.75	3	12	12	12	8	2,3
3	20	.75	4	12	12	12	8	2,3
4	30	.75	2	10	10	10	8	2
5	30	.75	3	10	10	10	8	2
6	30	.75	4	10	10	10	8	2
7	40	1	2	8	10	8	6	2
8	40	1	3	8	10	8	6	2
9	40	1	4	8	10	8	6	2
10	55	1	2	6	10	8	4	2
11	55	1	3	6	10	8	4	2
12	55	1.25	4	6	10	8	4	2
13	70	1	2	4	8	4	2	2
14	70	1.25	3	4	8	4	2	2
15	70	1.25	4	4	8	4	2	2
16	85	1.25	2	3	8	3	2	2
17	85	1.25	3	3	8	3	2	2
18	85	1.25	4	3	8	3	2	2
19	95	1.25	3	2	8	2	2	2
20	95	1.50	4	2	8	2	2	2
21	130	1.50	3	1	6	2	2	2
22	130	1.50	4	1	6	2	2	2
23	150	2	3	1/0	6	2	1/0	2
24	150	2	4	1/0	6	2	1/0	2
25	175	2	3	2/0	6	2	2/0	2
26	175	2	4	2/0	6	2	2/0	2
27	200	2	3	3/0	6	2	2/0	2
28	200	2.50	4	3/0	6	2	2/0	2
29	230	2.50	3	4/0	4	2	2/0	2
30	230	2.50	4	4/0	4	2	2/0	2
31	255	2.50	3	250	4	1	2/0	2
32	255	2.50	4	250	4	1	2/0	2
33	310	3	3	350	3	1/0	3/0	2
34	310	3	4	350	3	1/0	3/0	2
35	380	3.50	3	500	3	3/0	3/0	2
36	380	4	4	500	3	3/0	3/0	2
37	400	2 EA 2	3	3/0	3	3/0	3/0	2
38	400	2 EA 2.50	4	3/0	3	3/0	3/0	2
39	510	2 EA 2.50	3	250	1	4/0	3/0	2
40	510	2 EA 3	4	250	1	4/0	3/0	2
41	620	2 EA 3	3	350	1/0	4/0	3/0	2,4
42	620	2 EA 3.50	4	350	1/0	4/0	3/0	2,4
43	780	2 EA 3.50	3	500	1/0	4/0	3/0	2,4
44	780	2 EA 4	4	500	1/0	4/0	3/0	2,4
45	855	3 EA 3	3	300	2/0	4/0	3/0	2,4
46	855	3 EA 3	4	300	2/0	4/0	3/0	2,4
47	1000	3 EA 3.50	3	400	2/0	4/0	3/0	4
48	1000	3 EA 3.50	4	400	2/0	4/0	3/0	4
49	1140	3 EA 4	3	500	3/0	4/0	3/0	4
50	1140	3 EA 4	4	500	3/0	4/0	3/0	4
51	1240	4 EA 3	3	350	3/0	4/0	3/0	4
52	1240	4 EA 3	4	350	3/0	4/0	3/0	4
53	1675	5 EA 4	4	400	4/0	4/0	4/0	4
54	2010	6 EA 4	4	400	250	250	250	4
55	2660	7 EA 4	4	500	350	350	350	4
56	3040	8 EA 4	4	500	500	500	500	4
57	4180	11 EA 4	4	500	500	500	500	4
58		5 EA 4						6
59		2 EA 6						6
60		12 EA 6						6

CONDUIT AND CONDUCTOR SCHEDULE NOTES

1. CONDUCTORS SHOWN ARE SHOWN FOR EACH CONDUIT WITH MODIFICATIONS AS NOTED IN NOTE 5. ALL CONDUCTORS SHOWN ARE THWN UNLESS OTHERWISE NOTED.
2. PROVIDE EQUIPMENT GROUND CONDUCTORS PER TABLE 250-122 WHEN CIRCUIT BREAKERS ARE SIZED GREATER THAN AMPERE RATING SHOWN IN TABLE.
3. PROVIDE #10 NEUTRALS FOR MULTIWIRE BRANCH CIRCUITS SERVING COMPUTERS.
4. GROUND (G) CONDUCTOR MAY BE DELETED ON SERVICE ENTRANCE CONDUCTORS.
5. SYMBOL SUBSCRIPTS:

   "IG": INCLUDE IG (INSULATED/ISOLATED GROUND CONDUCTOR) SCHEDULED ALONG WITH THE GROUND OF EQUIPMENT GROUND CONDUCTOR.

   "SE": SUBSTITUTE "SE" CONDUCTOR FOR "G" CONDUCTOR SHOWN, WHICH IS SIZED FOR THE GROUNDING OF THE SECONDARY OF THE SEPARATELY DERIVED SYSTEM.

   "2N": INCLUDE TWO NEUTRAL CONDUCTORS, SIZED AS SCHEDULED FOR PHASED AND NEUTRAL CONDUCTORS.

6. RACEWAY ONLY. CONDUCTORS PROVIDED BY UTILITY.

CRSA
649 E. South Temple
Salt Lake City, UT 84102
801.355.5915

MWL
11798 N. Lakeridge Pkwy.
Ashland, VA 23005
804-228-7473

State of Utah
Department of Administrative Services
Division of Facilities Construction & Management
4110 State Office Building
Salt Lake City, Utah 84114
Phone: (801) 538 - 3018
Fax: (801) 538 - 3267

DFCM APPROVAL STAMP

LICENSED PROFESSIONAL ENGINEER
No. 181563
DAVID E. WESEMANN
04-21-2014
STATE OF UTAH

ARCHITECT-ENGINEER STAMP

Unified State Laboratory Module 2

4451 South 2700 West,
Taylorsville, UT 84118

DFCM #: 13020300

Project #: B13-024

DATE:	ISSUE TYPE:
April 21, 2014	BID SET

MARK	DATE	DESCRIPTION
1	May 8, 2015	ADDENDUM #1

CHECKED BY	D. WESEMANN
DRAWN BY	DLM

LAB EQUIPMENT SCHEDULE

EP610

VOLUME 2

C:\Users\dlm\Documents\2013\3582Elec Central_DLM (8432).rvt
5/7/2015 5:27:34 PM

EQUIPMENT SCHEDULE KEY

E	DIVISION 26
Q	FURNISHED WITH THE EQUIPMENT OR BY MECHANICAL INSTALLER
*	COORDINATE WITH THE DIVISION 23 TEMPERATURE CONTROL INSTALLER
**	AUTOMATIC CONTROL WIRING BY DIVISION 23

NOTE:
1. ON EMERGENCY POWER
2. PROVIDE CONDUIT AND WIRING TO INTERLOCK INDOOR UNIT WITH OUTDOOR UNIT.
3. PROVIDE DISCONNECT WITH QUICK-BREAK/SLOW MAKE CONTACT AND INTERLOCK TO PROTECT VFD.
4. PROVIDE SHUNT TRIP FUSIBLE SWITCH AND INTERLOCK WITH FIRE ALARM SYSTEM PER CODE.
5. PROVIDE SINGLE POINT OF CONNECTION FOR EQUIPMENT.
6. EQUIPMENT TO RUN AT LESS THAN 50% WHEN BUILDING IS OPERATING ON EMERGENCY POWER.

EQUIPMENT SCHEDULE

UNIFIED STATE LAB MODULE 2

			LOAD DATA								OVERCURRENT PROTECTION			DISCONNECT			STARTER									
MARK	QTY	ITEM DESCRIPTION	HP	kW	MCA	FLA	VOLT	PH	Hz	WIRE AND CONDUIT SIZE	FURN BY	DEVICE	LOCATION	FURN BY	DEVICE	LOCATION	FURN BY	DEVICE	SIZES	SELECTOR SWITCH	PILOT LAMP	NORMALLY OPEN CONTACT	NORMALLY CLOSED CONTACT	PHASE FAILURE RELAY	NOTES	MARK
AC-1	1	AIR COMPRESSOR (VEB)	7.5	-	-	7.6	480	3	60	3 #12, #12GR 0.75" CND	E	20/3 CB	1HB	E	30A/3P NF	ADJ TO EQUIP	E	FVNR	1	HOA	R,G	2	2	YES		AC-1
AH-1a	1	AIR HANDLER UNIT	(12) 15	-	-	252	480	3	60	3 #500, #3 GR 3.5" CND	E	400/3 CB	PMCC-C2	Q	VFD	ADJ TO EQUIP	Q	VFD							1,3,6	AH-1a
AH-1b	1	AIR HANDLER UNIT ACCESSORIES	-	-	-	16	120	1	60	2 #12, #12 GR 0.75" CND	E	20/1 CB	LMPC2	E	30A/1P NF	ADJ TO EQUIP	-								1	AH-1b
AH-2a	1	AIR HANDLER UNIT	(12) 15	-	-	252	480	3	60	3 #500, #3 GR 3.5" CND	E	400/3 CB	PMCC-C2	Q	VFD	ADJ TO EQUIP	Q	VFD							1,3,6	AH-2a
AH-2b	1	AIR HANDLER UNIT ACCESSORIES	-	-	-	16	120	1	60	2 #12, #12 GR 0.75" CND	E	20/1 CB	LMPC2	E	30A/1P NF	ADJ TO EQUIP	-								1	AH-2b
AH-3a	1	LARGE AIR HANDLER UNIT	(2) 50	-	-	130	480	3	60	3 #4/0, #4 GR 2.5" CND	E	225/3 CB	PMCC-C2	Q	VFD	ADJ TO EQUIP	Q	VFD							1,3,6	AH-3a
AH-3b	1	LARGE AIR HANDLER UNIT ACCESSORIES	-	-	-	16	120	1	60	2 #12, #12 GR 0.75" CND	E	20/1 CB	LMPC2	E	30A/1P NF	ADJ TO EQUIP	-								1	AH-3b
AH-4a	1	LARGE AIR HANDLER UNIT	(2) 50	-	-	130	480	3	60	3 #4/0, #4 GR 2.5" CND	E	225/3 CB	PMCC-C2	Q	VFD	ADJ TO EQUIP	Q	VFD							1,3,6	AH-4a
AH-4b	1	LARGE AIR HANDLER UNIT ACCESSORIES	-	-	-	16	120	1	60	2 #12, #12 GR 0.75" CND	E	20/1 CB	LMPC2	E	30A/1P NF	ADJ TO EQUIP	-								1	AH-4b
CH-3	1	AIR-COOLED CHILLER	40	-	-	52	480	3	60	3 #1, #6 GR 1.5" CND	E	100/3 CB	PMCC-C2	Q		ADJ TO EQUIP	Q								1	CH-3
CU-1	1	REMOTE CONDENSING UNIT	-	-	-	8.3	480	3	60	3 #12, #12GR 0.75" CND	E	20/3 CB	PMCC2	E	30A/3P NF	ADJ TO EQUIP	Q								2	CU-1
CU-2	1	REMOTE CONDENSING UNIT	-	-	-	8.3	480	3	60	3 #12, #12GR 0.75" CND	E	20/3 CB	PMCC2	E	30A/3P NF	ADJ TO EQUIP	Q								2	CU-2
CUH-1	1	CABINET UNIT HEATER	1/30	-	-	0.7	120	1	60	2 #12, 12 GR 0.75" CND	E	20/1 CB	1LA1	Q			Q									CUH-1
CUH-2	1	CABINET UNIT HEATER	1/15	-	-	1.1	120	1	60	2 #12, 12 GR 0.75" CND	E	20/1 CB	1LA1	Q			Q									CUH-2
CUH-3	1	CABINET UNIT HEATER	1/25	-	-	0.4	120	1	60	2 #12, 12 GR 0.75" CND	E	20/1 CB	1LB1	Q			Q									CUH-3
CUH-4	1	CABINET UNIT HEATER	1/30	-	-	0.7	120	1	60	2 #12, 12 GR 0.75" CND	E	20/1 CB	1LB1	Q			Q									CUH-4
CUH-5	1	CABINET UNIT HEATER	1/25	-	-	0.4	120	1	60	2 #12, 12 GR 0.75" CND	E	20/1 CB	1LB1	Q			Q									CUH-5
CUH-6	1	CABINET UNIT HEATER	1/15	-	-	1.1	120	1	60	2 #12, 12 GR 0.75" CND	E	20/1 CB	2LA1	Q			Q									CUH-6
DC-1	1	DUST COLLETOR	(1) 2 (1) 1/3	-	5.25	4.4	480	3	60	3 #12, #12GR 0.75" CND	E	20/3 CB	PMCC2	E	30A/3P NF	ADJ TO EQUIP	Q								5	DC-1
DC-2	1	DUST COLLETOR	(1) 2 (1) 1/3	-	5.25	4.4	480	3	60	3 #12, #12GR 0.75" CND	E	20/3 CB	PMCC2	E	30A/3P NF	ADJ TO EQUIP	Q								5	DC-2
DEF-1	1	ROOF DOWNBLAST, DOME EXHAUST FAN	1/3	-	-	7.2	120	1	60	2 #12, 12 GR 0.75" CND	E	20/1 CB	LMP	E	30A/1P NF	ADJ TO EQUIP	E	FVNR	0	HOA	R,G	2	2	NO		DEF-1
DEF-2	1	ROOF DOWNBLAST, DOME EXHAUST FAN	5	-	-	7.6	480	3	60	3 #12, #12GR 0.75" CND	E	20/3 CB	PMCC2	E	30A/3P NF	ADJ TO EQUIP	E	FVNR	1	HOA	R,G	2	2	YES		DEF-2
DEF-3	1	BACKWARD INCLINED VENT	10	-	-	14	480	3	60	3 #10, #10 GR 0.75" CND	E	30/3 CB	PMCC-C2	E	30A/3P NF	ADJ TO EQUIP	Q	VFD							1,3	DEF-3
DEF-4	1	ROOF DOWNBLAST, DOME EXHAUST FAN	3/4	-	-	1.4	480	3	60	3 #12, #12GR 0.75" CND	E	20/3 CB	1HB	E	30A/1P NF	ADJ TO EQUIP	E	FVNR	0	HOA	R,G	2	2	YES		DEF-4
DEF-6	1	BACKWARD INCLINED FRP	1.5	-	-	2.6	480	3	60	3 #12, #12GR 0.75" CND	E	20/3 CB	PMCC-C2	Q	VFD	ADJ TO EQUIP	Q	VFD							1,3	DEF-6
DEF-7	1	BOOSTER EXHAUST FAN	-	-	-	0.9	120	1	60	2 #12, 12 GR 0.75" CND	E	20/1 CB	1LB1	E	THERMAL SWITCH	ADJ TO EQUIP	E	FVNR	0	HOA	R,G	2	2	YES		DEF-7
DF-1	1	DUCT FREE FAN COIL WITH REMOTE CONDENSER	-	-	-	0.6	480	3	60	3 #12, #12GR 0.75" CND	E	20/3 CB	PMCC2	E	30A/3P NF	ADJ TO EQUIP	Q								2	DF-1
DF-2	1	DUCT FREE FAN COIL WITH REMOTE CONDENSER	-	-	-	0.6	480	3	60	3 #12, #12GR 0.75" CND	E	20/3 CB	PMCC2	E	30A/3P NF	ADJ TO EQUIP	Q								2	DF-2
EC-1	1	EVAPORATIVE COOLER (AH-1)	1/2	-	-	9.8	120	1	60	2 #12, 12 GR 0.75" CND	E	20/1 CB	LMPC2	E	30A/1P NF	ADJ TO EQUIP	E	FVNR	0	HOA	R,G	2	2	NO	1	EC-1
EC-2	1	EVAPORATIVE COOLER (AH-2)	1/2	-	-	9.8	120	1	60	2 #12, 12 GR 0.75" CND	E	20/1 CB	LMPC2	E	30A/1P NF	ADJ TO EQUIP	E	FVNR	0	HOA	R,G	2	2	NO	1	EC-2
ELEV-1	1	ELEVATOR 1	50	-	-	65	480	3	60	3 #3/0, #2 GR 2" CND	E	200/3 CB	1HDPB	E	200A/3P CLASS J	1HDPB	Q								4	ELEV-1
ELEV-2	1	ELEVATOR 2	40	-	-	52	480	3	60	3 #3/0, #2 GR 2" CND	E	200/3 CB	1HDPB	E	200A/3P CLASS J	1HDPB	Q								4	ELEV-2
FC-1	1	FAN COIL	.5	-	-	1	480	3	60	3 #12, #12GR 0.75" CND	E	20/3 CB	1CHDPB	Q			E	FVNR	1	HOA	R,G	2	2	YES		FC-1
FC-2	1	FAN COIL	.5	-	-	1	480	3	60	3 #12, #12GR 0.75" CND	E	20/3 CB	1CHDPB	Q			E	FVNR	1	HOA	R,G	2	2	YES		FC-2
FC-3	1	FAN COIL	.5	-	-	1	480	3	60	3 #12, #12GR 0.75" CND	E	20/3 CB	1HB	Q			E	FVNR	1	HOA	R,G	2	2	YES		FC-3
FC-4	1	FAN COIL	.5	-	-	1	480	3	60	3 #12, #12GR 0.75" CND	E	20/3 CB	1EH	Q			E	FVNR	1	HOA	R,G	2	2	YES	1	FC-4
FC-5	1	FAN COIL	.5	-	-	1	480	3	60	3 #12, #12GR 0.75" CND	E	20/3 CB	1CHDPB	Q			E	FVNR	1	HOA	R,G	2	2	YES		FC-5
FC-6	1	FAN COIL	.5	-	-	1	480	3	60	3 #12, #12GR 0.75" CND	E	20/3 CB	1CHDPB	Q			E	FVNR	1	HOA	R,G	2	2	YES		FC-6
GFS-1	1	GLYCOL FEED SYSTEM	-	-	-	16	120	1	60	2 #12, #12 GR 0.75" CND	E	20/1 CB	LMP	E	OUTLET	ADJ TO EQUIP	-									GFS-1
GFS-2	1	GLYCOL FEED SYSTEM	-	-	-	16	120	1	60	2 #12, #12 GR 0.75" CND	E	20/1 CB	LMP	E	OUTLET	ADJ TO EQUIP	-									GFS-2
GFS-3	1	GLYCOL FEED SYSTEM	-	-	-	16	120	1	60	2 #12, #12 GR 0.75" CND	E	20/1 CB	LMP	E	OUTLET	ADJ TO EQUIP	-									GFS-3

CRSA
649 E. South Temple
Salt Lake City, UT 84102
801.355.5915

MWL
11798 N. Lakeridge Pkwy.
Ashland, VA 23005
804-228-7473

State of Utah
Department of Administrative Services
Division of Facilities Construction & Management
4110 State Office Building
Salt Lake City, Utah 84114
Phone: (801) 538 - 3018
Fax: (801) 538 - 3267

DFCM APPROVAL STAMP

LICENSED PROFESSIONAL ENGINEER No. 181563 DAVID E. WESEMANN 04-21-2014 STATE OF UTAH

ARCHITECT-ENGINEER STAMP

Unified State Laboratory Module 2

4451 South 2700 West, Taylorsville, UT 84118

DFCM #: 13020300

Project #: B13-024

DATE:	ISSUE TYPE:
April 21, 2014	BID SET

MARK	DATE	DESCRIPTION
1	May 8, 2015	ADDENDUM #1

CHECKED BY	D. WESEMANN
DRAWN BY	DLM

MECHANICAL EQUIPMENT SCHEDULE - MOD 2 BLDG (a)

EP611

VOLUME 2

C:\Users\dlm\Documents\20130302Elec-Central_DLM (8432).rvt
5/7/2015 5:27:38 PM

EQUIPMENT SCHEDULE KEY

E	DIVISION 26
Q	FURNISHED WITH THE EQUIPMENT OR BY MECHANICAL INSTALLER
*	COORDINATE WITH THE DIVISION 23 TEMPERATURE CONTROL INSTALLER
**	AUTOMATIC CONTROL WIRING BY DIVISION 23

NOTE:
1. ON EMERGENCY POWER
2. PROVIDE CONDUIT AND WIRING TO INTERLOCK INDOOR UNIT WITH OUTDOOR UNIT.
3. PROVIDE DISCONNECT WITH QUICK-BREAK/SLOW MAKE CONTACT AND INTERLOCK TO PROTECT VFD.
4. PROVIDE SHUNT TRIP FUSIBLE SWITCH AND INTERLOCK WITH FIRE ALARM SYSTEM PER CODE.

EQUIPMENT SCHEDULE

UNIFIED STATE LAB MODULE 2

			LOAD DATA								OVERCURRENT PROTECTION			DISCONNECT			STARTER									
MARK	QTY	ITEM DESCRIPTION	HP	kW	MCA	FLA	VOLT	PH	Hz	WIRE AND CONDUIT SIZE	FURN BY	DEVICE	LOCATION	FURN BY	DEVICE	LOCATION	FURN BY	DEVICE	SIZES	SELECTOR SWITCH	PILOT LAMP	NORMALLY OPEN CONTACT	NORMALLY CLOSED CONTACT	PHASE FAILURE RELAY	NOTES	MARK
P-15	1	PUMP	25	-	-	34	480	3	60	3 #6, #10 GR 1" CND	E	60/3 CB	PMCC-C2	Q	VFD	ADJ TO EQUIP	Q	VFD							1	P-15
P-16	1	PUMP	25	-	-	34	480	3	60	3 #6, #10 GR 1" CND	E	60/3 CB	PMCC-C2	Q	VFD	ADJ TO EQUIP	Q	VFD							1	P-16
P-17	1	PUMP	20	-	-	27	480	3	60	3 #6, #10 GR 1" CND	E	50/3 CB	PMCC2	E	60A/3P NF	ADJ TO EQUIP	E	FVNR	2	HOA	R,G	2	2	YES		P-17
P-18	1	PUMP	20	-	-	27	480	3	60	3 #6, #10 GR 1" CND	E	50/3 CB	PMCC2	E	60A/3P NF	ADJ TO EQUIP	E	FVNR	2	HOA	R,G	2	2	YES		P-18
P-19	1	PUMP	2	-	-	3.4	480	3	60	3 #12, #12GR 0.75" CND	E	20/3 CB	PMCC-C2	E	30A/3P NF	ADJ TO EQUIP	E	FVNR	1	HOA	R,G	2	2	YES	1	P-19
P-20	1	PUMP	3	-	-	4.8	480	3	60	3 #12, #12GR 0.75" CND	E	20/3 CB	PMCC-C2	E	30A/3P NF	ADJ TO EQUIP	E	FVNR	1	HOA	R,G	2	2	YES		P-20
SP-1	1	SUMP PUMP	1/2	-	-	9.8	120	1	60	2 #12, 12 GR 0.75" CND	E	20/1 CB	LMQ2	E	THERMAL SWITCH	ADJ TO EQUIP	E	FVNR	0	HOA	R,G	2	2	NO		SP-1
SP-2	1	SUMP PUMP	1/2	-	-	9.8	120	1	60	2 #12, 12 GR 0.75" CND	E	20/1 CB	LMQ2	E	THERMAL SWITCH	ADJ TO EQUIP	E	FVNR	0	HOA	R,G	2	2	NO		SP-2
UH-1	1	HOT WATER UNIT HEATER (SALLY PORT)	1/8	-	-	4	120	1	60	2 #12, 12 GR 0.75" CND	E	20/1 CB	1LB2	Q			Q									UH-1
UH-2	1	HOT WATER UNIT HEATER (PENTHOUSE)	1/8	-	-	4	120	1	60	2 #12, 12 GR 0.75" CND	E	20/1 CB	LMP	Q			Q									UH-2
UH-3	1	HOT WATER UNIT HEATER (PENTHOUSE)	1/8	-	-	4	120	1	60	2 #12, 12 GR 0.75" CND	E	20/1 CB	LMP	Q			Q									UH-3
UH-4	1	HOT WATER UNIT HEATER (PENTHOUSE)	1/8	-	-	4	120	1	60	2 #12, 12 GR 0.75" CND	E	20/1 CB	LMP	Q			Q									UH-4
UH-5	1	HOT WATER UNIT HEATER (PENTHOUSE)	1/8	-	-	4	120	1	60	2 #12, 12 GR 0.75" CND	E	20/1 CB	LMP	Q			Q									UH-5

CRSA
649 E. South Temple
Salt Lake City, UT 84102
801.355.5915

MWL
11798 N. Lakeridge Pkwy.
Ashland, VA 23005
804-228-7473

State of Utah
Department of Administrative Services
Division of Facilities Construction & Management
4110 State Office Building
Salt Lake City, Utah 84114
Phone: (801) 538 - 3018
Fax: (801) 538 - 3267

DFCM APPROVAL STAMP

LICENSED PROFESSIONAL ENGINEER
No. 181563
DAVID E. WESEMANN
04-21-2014
STATE OF UTAH

ARCHITECT-ENGINEER STAMP

Unified State Laboratory Module 2

4451 South 2700 West, Taylorsville, UT 84118

DFCM #: 13020300

Project #: B13-024

DATE:	ISSUE TYPE:
April 21, 2014	BID SET

MARK	DATE	DESCRIPTION
1	May 8, 2015	ADDENDUM #1

CHECKED BY: D. WESEMANN

DRAWN BY: DLM

MECHANICAL EQUIPMENT SCHEDULE - MOD 2 BLDG (b)

EP612

VOLUME 2

C:\Users\dlm\Documents\20130362Elec-Central_DLM (8432).rvt
5/7/2015 5:27:41 PM

EQUIPMENT SCHEDULE KEY

E	DIVISION 26
Q	FURNISHED WITH THE EQUIPMENT OR BY MECHANICAL INSTALLER
*	COORDINATE WITH THE DIVISION 23 TEMPERATURE CONTROL INSTALLER
**	AUTOMATIC CONTROL WIRING BY DIVISION 23

NOTE:
1. ON EMERGENCY POWER
2. PROVIDE CONDUIT AND WIRING TO INTERLOCK INDOOR UNIT WITH OUTDOOR UNIT.
3. PROVIDE DISCONNECT WITH QUICK-BREAK/SLOW MAKE CONTACT AND INTERLOCK TO PROTECT VFD.
4. PROVIDE SHUNT TRIP FUSIBLE SWITCH AND INTERLOCK WITH FIRE ALARM SYSTEM PER CODE.

EQUIPMENT SCHEDULE

UNIFIED STATE LAB MODULE 2

			LOAD DATA								OVERCURRENT PROTECTION			DISCONNECT			STARTER									
MARK	QTY	ITEM DESCRIPTION	HP	kW	MCA	FLA	VOLT	PH	Hz	WIRE AND CONDUIT SIZE	FURN BY	DEVICE	LOCATION	FURN BY	DEVICE	LOCATION	FURN BY	DEVICE	SIZES	SELECTOR SWITCH	PILOT LAMP	NORMALLY OPEN CONTACT	NORMALLY CLOSED CONTACT	PHASE FAILURE RELAY	NOTES	MARK
B-1	1	HYDRONIC BOILER	5	-	-	7.6	480	3	60	3 #12, #12GR 0.75" CND	E	20/3 CB	1MCCQ2	E	30A/3P NF	ADJ TO EQUIP	E	FVNR	1	HOA	R,G	2	2	YES	1	B-1
B-2	1	HYDRONIC BOILER	5	-	-	7.6	480	3	60	3 #12, #12GR 0.75" CND	E	20/3 CB	1MCCQ2	E	30A/3P NF	ADJ TO EQUIP	E	FVNR	1	HOA	R,G	2	2	YES	1	B-2
B-3	1	HYDRONIC BOILER	5	-	-	7.6	480	3	60	3 #12, #12GR 0.75" CND	E	20/3 CB	1MCCQ2	E	30A/3P NF	ADJ TO EQUIP	E	FVNR	1	HOA	R,G	2	2	YES	1	B-3
CH-1	1	WATER-COOLED CHILLER	-	-	411	370	480	3	60	2EA 3 #350, #1/0 GR 2 EA. 3" CND	E	600/3 CB	1MCC2	Q		ADJ TO EQUIP	Q								3	CH-1
CH-2	1	WATER-COOLED CHILLER	-	-	270	243	480	3	60	3 #500, #3 GR 3.5" CND	E	400/3 CB	1MCC2	Q		ADJ TO EQUIP	Q								3	CH-2
CT-1a	1	COOLING TOWER	25	-	-	34	480	3	60	3 #6, #10 GR 1" CND	E	60/3 CB	1MCC	Q	VFD	ADJ TO EQUIP	Q	VFD							3	CT-1a
CT-1b	1	COOLING TOWER ACCESSORIES	-	-	-	16	120	1	60	2 #10, 10 GR 0.75" CND	E	20/1 CB	LM1	E	30A/1P NF	ADJ TO EQUIP	-									CT-1b
CT-2a	1	COOLING TOWER	25	-	-	34	480	3	60	3 #6, #10 GR 1" CND	E	60/3 CB	1MCC	Q	VFD	ADJ TO EQUIP	Q	VFD							3	CT-2a
CT-2b	1	COOLING TOWER ACCESSORIES	-	-	-	16	120	1	60	2 #10, 10 GR 0.75" CND	E	20/1 CB	LM1	E	30A/1P NF	ADJ TO EQUIP	-									CT-2b
DEF-5	1	ROOF UPBLAST, DOME EXHAUST FAN	1	-	-	2.1	480	3	60	3 #12, #12GR 0.75" CND	E	20/3 CB	1MCCQ2	Q	VFD	ADJ TO EQUIP	Q	VFD							1,3	DEF-5
DOF-1	1	ROOF FILTERED; DOME OUTSIDE FAN	1/2	-	-	9.8	120	1	60	2 #12, 12 GR 0.75" CND	E	20/1 CB	LMP2	E	30A/1P NF	ADJ TO EQUIP	E	FVNR	0	HOA	R,G	2	2	NO		DOF-1
FC-7	1	FAN COIL UNIT	2	-	-	3.4	480	3	60	3 #12, #12GR 0.75" CND	E	15/3 CB	1MCC2	E	30A/3P NF	ADJ TO EQUIP	E	FVNR	1	HOA	R,G	2	2	YES		FC-7
FC-8	1	FAN COIL UNIT	2	-	-	3.4	480	3	60	3 #12, #12GR 0.75" CND	E	15/3 CB	1MCC2	E	30A/3P NF	ADJ TO EQUIP	E	FVNR	1	HOA	R,G	2	2	YES		FC-8
H-1	1	INTAKE HOOD (BOILER ROOM)	-	-	-	4.2	120	1	60	2 #12, 12 GR 0.75" CND	E	20/1 CB	LMQ2	E	30A/1P NF	ADJ TO EQUIP	E	FVNR	0	HOA	R,G	2	2	NO	1	H-1
P-1	1	PUMP	30	-	-	40	480	3	60	3 #4, #8 GR 1.25" CND	E	70/3 CB	1MCC2	Q	VFD	ADJ TO EQUIP	Q	VFD							3	P-1
P-2	1	PUMP	30	-	-	40	480	3	60	3 #4, #8 GR 1.25" CND	E	70/3 CB	1MCC2	Q	VFD	ADJ TO EQUIP	Q	VFD							3	P-2
P-3	1	PUMP	30	-	-	40	480	3	60	3 #4, #8 GR 1.25" CND	E	70/3 CB	1MCC2	Q	VFD	ADJ TO EQUIP	Q	VFD							3	P-3
P-4	1	PUMP	20	-	-	27	480	3	60	3 #8, #10 GR 1" CND	E	50/3 CB	1MCC2	Q	VFD	ADJ TO EQUIP	Q	VFD							3	P-4
P-5	1	PUMP	50	-	-	65	480	3	60	3 #2, #8 GR 1.25" CND	E	100/3 CB	1MCC2	Q	VFD	ADJ TO EQUIP	Q	VFD							3	P-5
P-6	1	PUMP	10	-	-	14	480	3	60	3 #10, #10 GR 0.75" CND	E	30/3 CB	1MCC2	E	30A/3P NF	ADJ TO EQUIP	E	FVNR	1	HOA	R,G	2	2	YES		P-6
P-7	1	PUMP	5	-	-	7.6	480	3	60	3 #12, #12GR 0.75" CND	E	20/3 CB	1MCC2	E	30A/3P NF	ADJ TO EQUIP	E	FVNR	1	HOA	R,G	2	2	YES		P-7
P-8	1	PUMP	50	-	-	65	480	3	60	3 #2, #8 GR 1.25" CND	E	100/3 CB	1MCC2	Q	VFD	ADJ TO EQUIP	Q	VFD							3	P-8
P-9	1	PUMP	50	-	-	65	480	3	60	3 #2, #8 GR 1.25" CND	E	100/3 CB	1MCC2	Q	VFD	ADJ TO EQUIP	Q	VFD							3	P-9
P-10	1	PUMP	3	-	-	4.8	480	3	60	3 #12, #12GR 0.75" CND	E	20/3 CB	1MCCQ2	E	30A/1P NF	ADJ TO EQUIP	E	FVNR	1	HOA	R,G	2	2	YES	1	P-10
P-11	1	PUMP	3	-	-	4.8	480	3	60	3 #12, #12GR 0.75" CND	E	20/3 CB	1MCCQ2	E	30A/1P NF	ADJ TO EQUIP	E	FVNR	1	HOA	R,G	2	2	YES	1	P-11
P-12	1	PUMP	3	-	-	4.8	480	3	60	3 #12, #12GR 0.75" CND	E	20/3 CB	1MCCQ2	E	30A/1P NF	ADJ TO EQUIP	E	FVNR	1	HOA	R,G	2	2	YES	1	P-12
P-13	1	PUMP	50	-	-	65	480	3	60	3 #2, #8 GR 1.25" CND	E	100/3 CB	1MCCQ2	Q	VFD	ADJ TO EQUIP	Q	VFD							1,3	P-13
P-14	1	PUMP	50	-	-	65	480	3	60	3 #2, #8 GR 1.25" CND	E	100/3 CB	1MCCQ2	Q	VFD	ADJ TO EQUIP	Q	VFD							1,3	P-14
P-21	1	PUMP	1/2	-	-	9.8	120	1	60	2 #12, 12 GR 0.75" CND	E	20/1 CB	LMP2	E	30A/1P NF	ADJ TO EQUIP	E	FVNR	0	HOA	R,G	2	2	NO		P-21
P-22	1	PUMP	1	-	-	2.1	480	3	60	3 #12, #12GR 0.75" CND	E	15/3 CB	1MCC2	E	30A/3P NF	ADJ TO EQUIP	E	FVNR	1	HOA	R,G	2	2	YES		P-22
P-23	1	PUMP	1	-	-	2.1	480	3	60	3 #12, #12GR 0.75" CND	E	15/3 CB	1MCC2	E	30A/3P NF	ADJ TO EQUIP	E	FVNR	1	HOA	R,G	2	2	YES	1	P-23
UH-6	1	HOT WATER UNIT HEATER (BOILER ROOM)	1/8	-	-	4	120	1	60	2 #12, 12 GR 0.75" CND	E	20/1 CB	LMP2	Q			Q									UH-6
UH-7	1	HOT WATER UNIT HEATER (BOILER ROOM)	1/8	-	-	4	120	1	60	2 #12, 12 GR 0.75" CND	E	20/1 CB	LMP2	Q			Q									UH-7
UH-8	1	HOT WATER UNIT HEATER (CHIILLER ROOM)	1/8	-	-	4	120	1	60	2 #12, 12 GR 0.75" CND	E	20/1 CB	LMP2	Q			Q									UH-8
UH-9	1	HOT WATER UNIT HEATER (CHIILLER ROOM)	1/8	-	-	4	120	1	60	2 #12, 12 GR 0.75" CND	E	20/1 CB	LMP2	Q			Q									UH-9
VP-4	1	VACUUM PUMP	25	-	-	34	480	3	60	3 #6, #10 GR 1" CND	EX	60/3 CB	1MCC	Q	CONTROL PANEL	ADJ TO EQUIP	Q									VP-4
WH-1	1	GAS FIRED WATER HEATER	-	-	-	6.2	120	1	60	2 #12, 12 GR 0.75" CND	E	20/1 CB	LMP2	E	30A/1P NF	ADJ TO EQUIP	E	FVNR	0	HOA	R,G	2	2	NO		WH-1
WH-2	1	GAS FIRED WATER HEATER	-	-	-	6.2	120	1	60	2 #12, 12 GR 0.75" CND	E	20/1 CB	LMP2	E	30A/1P NF	ADJ TO EQUIP	E	FVNR	0	HOA	R,G	2	2	NO		WH-2
WH-3	1	GAS FIRED WATER HEATER	-	-	-	6.2	120	1	60	2 #12, 12 GR 0.75" CND	E	20/1 CB	LMP2	E	30A/1P NF	ADJ TO EQUIP	E	FVNR	0	HOA	R,G	2	2	NO		WH-3
WH-4	1	GAS FIRED WATER HEATER	-	-	-	6.2	120	1	60	2 #12, 12 GR 0.75" CND	E	20/1 CB	LMP2	E	30A/1P NF	ADJ TO EQUIP	E	FVNR	0	HOA	R,G	2	2	NO		WH-4
WS-3	1	WATER SOFTENER	-	-	-	2	120	1	60	2 #12, 12 GR 0.75" CND	E	20/1 CB	LMP2	E	30A/1P NF	ADJ TO EQUIP	E	FVNR	0	HOA	R,G	2	2	YES		WS-3

CRSA
649 E. South Temple
Salt Lake City, UT 84102
801.355.5915

MWL
11798 N. Lakeridge Pkwy.
Ashland, VA 23005
804-228-7473

State of Utah
Department of Administrative Services
DFCM
Division of Facilities Construction & Management
4110 State Office Building
Salt Lake City, Utah 84114
Phone: (801) 538 - 3018
Fax: (801) 538 - 3267

DFCM APPROVAL STAMP

LICENSED PROFESSIONAL ENGINEER
No. 181563
DAVID E. WESEMANN
04-21-2014
STATE OF UTAH

ARCHITECT-ENGINEER STAMP

Unified State Laboratory Module 2

4451 South 2700 West, Taylorsville, UT 84118

DFCM #: 13020300

Project #: B13-024

DATE:	ISSUE TYPE:
April 21, 2014	BID SET

MARK	DATE	DESCRIPTION
1	May 8, 2015	ADDENDUM #1

CHECKED BY	D. WESEMANN
DRAWN BY	DLM

MECHANICAL EQUIPMENT SCHEDULE - MOD 1 ADDITION

EP613

VOLUME 2

C:\Users\dlm\Documents\2013\3362\Elec Central_DLM (8432).rvt
5/4/2015 1:09:05 PM

PANEL: "1CLA1"

VOLTS/PHASE/WIRE:	PANEL SIZE & TYPE:	MAIN SIZE AND TYPE:	LOCATION:	CABINET:	NOTES:
120/208V, 3 PH 4 WIRE	22" W x 6" D, BOLT-ON	225 AMPERE MAIN LUG	ELEC 100D	SURFACE	

ACCESSORIES: PANEL DIRECTORY, IDENTIFICATION, GROUNDING BAR **AIC RATING:** 10,679 AIC

CKT NO	OCP AMP	OCP POLE	LTG	PWR	CO	DESCRIPTION	A	A	B	B	C	C	DESCRIPTION	CO	PWR	LTG	OCP POLE	OCP AMP	CKT NO
1	20	1	0.0	0.0	0.2	CO: ELEC 100D	0.2	0.2					CO: ELEV-1 100C	0.2	0.0	0.1	1	20	2
3	20	1	0.0	1.0	0.0	PWR: ADA DOOR VEST 100			1.0	0.0			PWR: FSD TOILET 137, 139	0.0	0.0	0.0	1	20	4
5	20	1	--	--	--	SPARE					0.0	0.1	PWR: FSD HALL 130Q	0.0	0.1	0.0	1	20	6
7	20	1	--	--	--	SPARE	0.0	1.9					PWR: MECH CTRL POWER	0.0	1.9	0.0	1	20	8
9	20	1	--	--	--	SPARE			0.0	1.9			PWR: MECH CTRL POWER	0.0	1.9	0.0	1	20	10
11	20	1	--	--	--	SPARE					0.0	1.9	PWR: MECH CTRL POWER	0.0	1.9	0.0	1	20	12
13	20	1	--	--	--	SPARE	0.0	1.9					PWR: MECH CTRL POWER	0.0	1.9	0.0	1	20	14
15	20	1	--	--	--	SPARE			0.0	1.9			PWR: MECH CTRL POWER	0.0	1.9	0.0	1	20	16
17	20	1	--	--	--	SPARE					0.0	1.9	PWR: MECH CTRL POWER	0.0	1.9	0.0	1	20	18
19	20	1	--	--	--	SPARE	0.0	1.9					PWR: MECH CTRL POWER	0.0	1.9	0.0	1	20	20
21	20	1	--	--	--	SPARE			0.0	0.0			SPARE	--	--	--	1	20	22
23	20	1	--	--	--	SPARE					0.0	0.0	SPARE	--	--	--	1	20	24
25	20	1	--	--	--	SPARE	0.0	0.0					SPARE	--	--	--	1	20	26
27	20	1	--	--	--	SPARE			0.0	0.0			SPARE	--	--	--	1	20	28
29	20	1	--	--	--	SPARE					0.0	0.0	SPARE	--	--	--	1	20	30
31	20	1	--	--	--	SPARE	0.0	0.0					SPARE	--	--	--	1	20	32
33	20	1	--	--	--	SPARE			0.0	0.0			SPARE	--	--	--	1	20	34
35	20	1	--	--	--	SPARE					0.0	0.0	SPARE	--	--	--	1	20	36
37	20	1	--	--	--	SPARE	0.0	0.0					SPARE	--	--	--	1	20	38
39	20	1	--	--	--	SPARE			0.0	0.0			SPARE	--	--	--	1	20	40
41	20	1	--	--	--	SPARE					0.0	0.0	SPARE	--	--	--	1	20	42

TOTALS:
CONNECTED kVA PER PHASE **6** **5** **4** CONNECTED TOTAL kVA = **15**
CONNECTED AMPS PER PHASE **52** **42** **32** AVERAGE CONNECTED AMPS PER PHASE = **41**

NEC DIVERSIFIED LOAD CALCULATIONS

LIGHTING & CONTINUOUS LOADS: **0.1 kVA @ 125% = 0.1 kVA** - 100% CONNECTED LOAD PLUS 25% DIVERSIFIED TOTAL kVA = **15**
RECEPTACLES: **0.4 kVA @ 100% = 0.4 kVA** - FIRST 10kVA @ 100%, REMAINDER @ 50% AVERAGE AMPS PER PHASE = **41**
ALL OTHER LOADS @ 100% : **14.4 kVA** - MOTOR TOTALS INCLUDED IN ALL OTHER LOADS WITH LARGEST MOTOR CALCULATED @ 125% PER NEC

PANEL: "1CLB2"

VOLTS/PHASE/WIRE:	PANEL SIZE & TYPE:	MAIN SIZE AND TYPE:	LOCATION:	CABINET:	NOTES:
120/208V, 3 PH 4 WIRE	22" W x 6" D, BOLT-ON	225 AMPERE MAIN CB	VEST 100R	RECESSED	

ACCESSORIES: PANEL DIRECTORY, IDENTIFICATION, GROUNDING BAR **AIC RATING:** 11,180 AIC

CKT NO	OCP AMP	OCP POLE	LTG	PWR	CO	DESCRIPTION	A	A	B	B	C	C	DESCRIPTION	CO	PWR	LTG	OCP POLE	OCP AMP	CKT NO
1	20	1	0.0	0.7	0.0	PWR: SLIDNG DOOR TSSE RCVRY	0.7	0.2					CO: SLY PRT - EMER DOOR EXT...	0.2	0.0	0.0	1	20	2
3	20	1	0.0	1.1	0.0	PWR: SLIDING DOORS X-RAY 124B			1.1	1.8			PWR: (ME5) BODY RCV/RLSE 119	0.0	1.8	0.0	1	20	4
5	20	1	0.0	0.0	0.4	CO: TISSUE RECOVERY 123					0.4	2.8	PWR: (ME1) AUTOPSY 124A	0.0	2.8	0.0	1	40	6
7	20	1	0.0	0.0	0.2	CO: CHEST FRZR TISSUE RCVRY...	0.2	1.9					PWR: (ME8-A) OPEN SPACE 100S	0.0	1.9	0.0	1	20	8
9	20	1	0.0	0.0	0.4	CO: AUTOPSY 124A			0.4	1.9			PWR: (ME9-A) OPEN SPACE 100S	0.0	1.9	0.0	1	20	10
11	20	1	0.0	1.9	0.0	PWR: (ME8-B) OPEN SPACE100S					1.9	0.2	CO: SALLY PORT 121	0.2	0.0	0.0	1	20	12
13	20	1	0.0	1.9	0.0	PWR: (ME9-B) OPEN SPACE100S	1.9	1.9					PWR: (ME7-B) AUTOPSY 124A	0.0	1.9	0.0	1	20	14
15	20	1	0.0	0.0	0.4	CO: BODY RECEIVING/RELEASE 119			0.4	0.4			CO: BODY RECEIVING/RELEASE 119	0.4	0.0	0.0	1	20	16
17	20	1	0.0	0.0	0.2	CO: PROPERTY LOCKERS 118					0.2	0.2	CO: TISSUE RECOVERY 123	0.2	0.0	0.0	1	20	18
19	20	1	0.0	0.7	0.0	PWR: SLIDING DOORS LCKRS 118	0.7	0.2					CO: SPECIAL PROCEDURE AUTOPSY...	0.2	0.0	0.0	1	20	20
21	20	1	0.0	1.9	0.0	PWR: MECH CTRL POWER			1.9	0.2			CO: VEST 100R	0.2	0.0	0.0	1	20	22
23	20	1	0.0	1.9	0.0	PWR: MECH CTRL POWER					1.9	1.0	PWR: OH DOOR SALLY PORT 121	0.0	2.9	0.0	3	20	24
25	20	3	0.0	2.9	0.0	PWR: OH DOOR SALLY PORT 121	1.0	1.0					--	--	--	--	--	--	26
27	--	--	--	--	--	--			1.0	1.0			--	--	--	--	--	--	28
29	--	--	--	--	--	--					1.0	1.0	PWR: OH DOOR SALLY PORT 121	0.0	2.9	0.0	3	20	30
31	20	3	0.0	2.9	0.0	PWR: OH DOOR SALLY PORT 121	1.0	1.0					--	--	--	--	--	--	32
33	--	--	--	--	--	--			1.0	1.0			--	--	--	--	--	--	34
35	--	--	--	--	--	--					1.0	1.0	PWR: OH DOOR SALLY PORT 121	0.0	2.9	0.0	3	20	36
37	20	1	0.0	1.5	0.0	PWR: LTG ACCESSORIES CIRCUIT	1.5	1.0					--	--	--	--	--	--	38
39	20	1	0.0	1.5	0.0	PWR: LTG ACCESSORIES CIRCUIT			1.5	1.0			--	--	--	--	--	--	40
41	20	1	0.0	1.5	0.0	PWR: LTG ACCESSORIES CIRCUIT					1.5	1.9	PWR: (ME7-A) AUTOPSY 124A	0.0	1.9	0.0	1	20	42
43	20	1	--	--	--	SPARE	0.0	1.9					PWR: (ME7-C) AUTOPSY 124A	0.0	1.9	0.0	1	20	44
45	20	1	--	--	--	SPARE			0.0	1.9			PWR: (ME7-D) AUTOPSY 124A	0.0	1.9	0.0	1	20	46
47	20	1	--	--	--	SPARE					0.0	2.4	PWR: (ME7-G) AUTOPSY 124A	0.0	7.2	0.0	3	30	48
49	20	1	--	--	--	SPARE	0.0	2.4					--	--	--	--	--	--	50
51	20	1	--	--	--	SPARE			0.0	2.4			--	--	--	--	--	--	52
53	20	1	--	--	--	SPARE					0.0	2.4	PWR: (ME8-E) AUTOPSY 124A	0.0	7.2	0.0	3	30	54
55	20	1	--	--	--	SPARE	0.0	2.4					--	--	--	--	--	--	56
57	20	1	--	--	--	SPARE			0.0	2.4			--	--	--	--	--	--	58
59	20	1	--	--	--	SPARE					0.0	0.0	SPARE	--	--	--	1	20	60
61	20	1	--	--	--	SPARE	0.0	0.0					SPARE	--	--	--	1	20	62
63	20	1	--	--	--	SPARE			0.0	0.0			SPARE	--	--	--	1	20	64
65	20	1	--	--	--	SPARE					0.0	0.0	SPARE	--	--	--	1	20	66
67	20	1	--	--	--	SPARE	0.0	0.0					SPARE	--	--	--	1	20	68
69	20	1	--	--	--	SPARE			0.0	0.0			SPARE	--	--	--	1	20	70
71	20	1	--	--	--	SPARE					0.0	0.0	SPARE	--	--	--	1	20	72
73	20	1	--	--	--	SPARE	0.0	0.0					SPARE	--	--	--	1	20	74
75	20	1	--	--	--	SPARE			0.0	0.0			SPARE	--	--	--	1	20	76
77	20	1	--	--	--	SPARE					0.0	0.0	SPARE	--	--	--	1	20	78
79	20	1	--	--	--	SPARE	0.0	0.0					SPARE	--	--	--	1	20	80
81	20	1	--	--	--	SPARE			0.0	0.0			SPARE	--	--	--	1	20	82
83	20	1	--	--	--	SPARE					0.0	0.0	SPARE	--	--	--	1	20	84

TOTALS:
CONNECTED kVA PER PHASE **21** **21** **21** CONNECTED TOTAL kVA = **62**
CONNECTED AMPS PER PHASE **174** **176** **171** AVERAGE CONNECTED AMPS PER PHASE = **173**

NEC DIVERSIFIED LOAD CALCULATIONS

LIGHTING & CONTINUOUS LOADS: **0.0 kVA @ 125% = 0.0 kVA** - 100% CONNECTED LOAD PLUS 25% DIVERSIFIED TOTAL kVA = **62**
RECEPTACLES: **2.7 kVA @ 100% = 2.7 kVA** - FIRST 10kVA @ 100%, REMAINDER @ 50% AVERAGE AMPS PER PHASE = **173**
ALL OTHER LOADS @ 100% : **59.7 kVA** - MOTOR TOTALS INCLUDED IN ALL OTHER LOADS WITH LARGEST MOTOR CALCULATED @ 125% PER NEC

PANEL: "1CLB1"

VOLTS/PHASE/WIRE:	PANEL SIZE & TYPE:	MAIN SIZE AND TYPE:	LOCATION:	CABINET:	NOTES:
120/208V, 3 PH 4 WIRE	22" W x 6" D, BOLT-ON	225 AMPERE MAIN LUG	ELECTRICAL 100M	SURFACE	

ACCESSORIES: PANEL DIRECTORY, IDENTIFICATION, GROUNDING BAR **AIC RATING:** 11,536 AIC

CKT NO	OCP AMP	OCP POLE	LTG	PWR	CO	DESCRIPTION	A	A	B	B	C	C	DESCRIPTION	CO	PWR	LTG	OCP POLE	OCP AMP	CKT NO
1	20	1	0.0	0.0	0.4	CO: ROOM 100L, 100M	0.4	0.2					CO: ELEV-2 100Q	0.2	0.0	0.1	1	20	2
3	20	1	0.0	0.0	0.7	CO: I.T. 100G			0.7	0.7			CO: I.T. 100G	0.7	0.0	0.0	1	20	4
5	20	1	0.0	0.0	0.7	CO: I.T. 100G					0.7	0.2	CO: I.T. 100G	0.2	0.0	0.0	1	20	6
7	20	1	0.0	0.0	0.7	CO: I.T. 100F	0.7	0.7					CO: I.T. 100F	0.7	0.0	0.0	1	20	8
9	20	1	0.0	0.0	0.7	CO: I.T. 100F			0.7	0.2			CO: I.T. 100F	0.2	0.0	0.0	1	20	10
11	20	1	0.0	0.5	0.0	PWR: BMS I.T. 100F					0.5	0.8	PWR: RACK I.T. 100G	0.0	1.5	0.0	2	20	12
13	20	1	0.0	0.5	0.0	PWR: BMS I.T. 100F	0.5	0.8					--	--	--	--	--	--	14
15	20	1	0.0	0.5	0.0	PWR: BMS I.T. 100F			0.5	0.8			PWR: RACK I.T. 100G	0.0	1.5	0.0	2	20	16
17	20	1	0.0	1.0	0.0	BMS PANEL I.T. 100F					1.0	0.8	--	--	--	--	--	--	18
19	20	1	0.0	1.0	0.0	BMS PANEL I.T. 100G	1.0	0.8					PWR: RACK I.T. 100G	0.0	1.5	0.0	2	20	20
21	20	1	0.0	0.5	0.0	PWR: BMS I.T. 100G			0.5	0.8			--	--	--	--	--	--	22
23	20	1	0.0	0.5	0.0	PWR: BMS I.T. 100G					0.5	0.8	PWR: RACK I.T. 100G	0.0	1.5	0.0	2	20	24
25	20	1	0.0	0.5	0.0	PWR: BMS I.T. 100G	0.5	0.8					--	--	--	--	--	--	26
27	20	1	0.0	0.0	0.7	CO: I.T. 100G			0.7	0.8			PWR: RACK I.T. 100G	0.0	1.5	0.0	2	20	28
29	20	1	0.0	0.0	0.5	CO: ELECTRICAL 100M					0.5	0.8	--	--	--	--	--	--	30
31	20	1	0.0	0.0	0.4	CO: LOADING 115	0.4	0.8					PWR: RACK I.T. 100G	0.0	1.5	0.0	2	20	32
33	20	1	0.0	0.5	0.0	PWR: ADA DOOR RM 100N, 100K			0.5	0.8			--	--	--	--	--	--	34
35	20	1	0.0	1.0	0.0	PWR: ADA DOORS RM 100K, 105,...					1.0	1.0	PWR: (OH DOOR) VEB 2-1 113-1	0.0	1.0	0.0	1	20	36
37	20	1	0.0	0.5	0.0	PWR: ADA DOOR VEST 100N	0.5	1.0					PWR: (OH DOOR) VEB 2-2 113-2	0.0	1.0	0.0	1	20	38
39	20	1	0.0	0.1	0.0	PWR: FSD WAREHOUSE 114			0.1	1.0			PWR: (OH DOOR) VEB 2-2 113-2	0.0	1.0	0.0	1	20	40
41	20	1	0.0	0.0	0.2	CO: VEB 2 113					0.2	1.9	PWR: MECH CTRL POWER	0.0	1.9	0.0	1	20	42
43	20	1	0.0	0.0	0.2	CO: VEB 2 113	0.2	1.9					PWR: MECH CTRL POWER	0.0	1.9	0.0	1	20	44
45	20	1	0.0	1.2	0.0	PWR: SLIDING GATE MOTOR			1.2	1.9			PWR: MECH CTRL POWER	0.0	1.9	0.0	1	20	46
47	20	1	--	--	--	SPARE					0.0	1.9	PWR: MECH CTRL POWER	0.0	1.9	0.0	1	20	48
49	20	1	--	--	--	SPARE	0.0	1.9					PWR: MECH CTRL POWER	0.0	1.9	0.0	1	20	50
51	20	1	--	--	--	SPARE			0.0	1.0			PWR: PANEL ACS1 I.T. 100G	0.0	1.0	0.0	1	20	52
53	20	1	--	--	--	SPARE					0.0	0.0	SPARE	--	--	--	1	20	54
55	20	1	--	--	--	SPARE	0.0	0.0					SPARE	--	--	--	1	20	56
57	20	1	--	--	--	SPARE			0.0	0.0			SPARE	--	--	--	1	20	58
59	20	1	--	--	--	SPARE					0.0	0.0	SPARE	--	--	--	1	20	60
61	20	1	--	--	--	SPARE	0.0	0.0					SPARE	--	--	--	1	20	62
63	20	1	--	--	--	SPARE			0.0	0.0			SPARE	--	--	--	1	20	64
65	20	1	--	--	--	SPARE					0.0	0.0	SPARE	--	--	--	1	20	66
67	20	1	--	--	--	SPARE	0.0	0.0					SPARE	--	--	--	1	20	68
69	20	1	--	--	--	SPARE			0.0	0.0			SPARE	--	--	--	1	20	70
71	20	1	--	--	--	SPARE					0.0	0.0	SPARE	--	--	--	1	20	72
73	20	1	--	--	--	SPARE	0.0	0.0					SPARE	--	--	--	1	20	74
75	20	1	--	--	--	SPARE			0.0	0.0			SPARE	--	--	--	1	20	76
77	20	1	--	--	--	SPARE					0.0	0.0	SPARE	--	--	--	1	20	78
79	20	1	--	--	--	SPARE	0.0	0.0					SPARE	--	--	--	1	20	80
81	20	1	--	--	--	SPARE			0.0	0.0			SPARE	--	--	--	1	20	82
83	20	1	--	--	--	SPARE					0.0	0.0	SPARE	--	--	--	1	20	84

TOTALS:
CONNECTED kVA PER PHASE **13** **13** **12** CONNECTED TOTAL kVA = **35**
CONNECTED AMPS PER PHASE **108** **107** **104** AVERAGE CONNECTED AMPS PER PHASE = **97**

NEC DIVERSIFIED LOAD CALCULATIONS

LIGHTING & CONTINUOUS LOADS: **0.1 kVA @ 125% = 0.1 kVA** - 100% CONNECTED LOAD PLUS 25% DIVERSIFIED TOTAL kVA = **35**
RECEPTACLES: **7.2 kVA @ 100% = 7.2 kVA** - FIRST 10kVA @ 100%, REMAINDER @ 50% AVERAGE AMPS PER PHASE = **97**
ALL OTHER LOADS @ 100% : **27.8 kVA** - MOTOR TOTALS INCLUDED IN ALL OTHER LOADS WITH LARGEST MOTOR CALCULATED @ 125% PER NEC

PANEL: "1CLB3"

VOLTS/PHASE/WIRE:	PANEL SIZE & TYPE:	MAIN SIZE AND TYPE:	LOCATION:	CABINET:	NOTES:
120/208V, 3 PH 4 WIRE	22" W x 6" D, BOLT-ON	150 AMPERE MAIN CB	HALL 126A	RECESSED	

ACCESSORIES: PANEL DIRECTORY, IDENTIFICATION, GROUNDING BAR **AIC RATING:** 7,979 AIC

CKT NO	OCP AMP	OCP POLE	LTG	PWR	CO	DESCRIPTION	A	A	B	B	C	C	DESCRIPTION	CO	PWR	LTG	OCP POLE	OCP AMP	CKT NO
1	20	1	0.0	0.0	0.4	CO: AUTOPSY 124	0.4	2.8					PWR: ME1 AUTOPSY 124	0.0	2.8	0.0	1	40	2
3	20	1	0.0	0.0	0.4	CO: AUTOPSY 124			0.4	2.8			PWR: ME1 AUTOPSY 124	0.0	2.8	0.0	1	40	4
5	20	1	0.0	0.0	0.4	CO: AUTOPSY 124					0.4	2.8	PWR: ME1 AUTOPSY 124	0.0	2.8	0.0	1	40	6
7	20	1	0.0	0.0	0.4	CO: AUTOPSY 124	0.4	2.8					PWR: ME1 AUTOPSY 124	0.0	2.8	0.0	1	40	8
9	20	1	0.0	0.0	0.4	CO: AUTOPSY 124			0.4	2.8			PWR: ME1 AUTOPSY 124	0.0	2.8	0.0	1	40	10
11	20	1	0.0	0.0	0.4	CO: AUTOPSY 124					0.4	2.8	PWR: ME1 AUTOPSY 124	0.0	2.8	0.0	1	40	12
13	20	1	0.0	0.0	0.4	CO: HISTOLOGY LAB 124D	0.4	0.4					CO: HISTOLOGY LAB 124D	0.4	0.0	0.0	1	20	14
15	20	1	0.0	1.9	0.0	PWR: MECH CTRL POWER			1.9	0.2			CO: AUTOPSY 124	0.2	0.0	0.0	1	20	16
17	20	1	--	--	--	SPARE					0.0	0.4	CO: AUTOPSY 124	0.4	0.0	0.0	1	20	18
19	20	1	--	--	--	SPARE	0.0	0.4					CO: HISTOLOGY LAB 124D	0.4	0.0	0.0	1	20	20
21	20	1	--	--	--	SPARE			0.0	0.0			SPARE	--	--	--	1	20	22
23	20	1	--	--	--	SPARE					0.0	0.0	SPARE	--	--	--	1	20	24
25								0.0					SPARE	--	--	--	1	20	26
27	20	1	--	--	--	SPARE			0.0	0.0			SPARE	--	--	--	1	20	28
29	20	1	--	--	--	SPARE					0.0	0.0	SPARE	--	--	--	1	20	30
31	20	1	--	--	--	SPARE	0.0	0.0					SPARE	--	--	--	1	20	32
33	20	1	--	--	--	SPARE			0.0	0.0			SPARE	--	--	--	1	20	34
35	20	1	--	--	--	SPARE					0.0	0.0	SPARE	--	--	--	1	20	36
37	20	1	--	--	--	SPARE	0.0	0.0					SPARE	--	--	--	1	20	38
39	20	1	--	--	--	SPARE			0.0	0.0			SPARE	--	--	--	1	20	40
41	20	1	--	--	--	SPARE					0.0	0.0	SPARE	--	--	--	1	20	42
43	20	1	--	--	--	SPARE	0.0	0.0					SPARE	--	--	--	1	20	44
45	20	1	--	--	--	SPARE			0.0	0.0			SPARE	--	--	--	1	20	46
47	20	1	--	--	--	SPARE					0.0	0.0	SPARE	--	--	--	1	20	48
49	20	1	--	--	--	SPARE	0.0	0.0					SPARE	--	--	--	1	20	50
51	20	1	--	--	--	SPARE			0.0	0.0			SPARE	--	--	--	1	20	52
53	20	1	--	--	--	SPARE					0.0	0.0	SPARE	--	--	--	1	20	54
55	20	1	--	--	--	SPARE	0.0	0.0					SPARE	--	--	--	1	20	56
57	20	1	--	--	--	SPARE			0.0	0.0			SPARE	--	--	--	1	20	58
59	20	1	--	--	--	SPARE					0.0	0.0	SPARE	--	--	--	1	20	60

TOTALS:
CONNECTED kVA PER PHASE **7** **8** **7** CONNECTED TOTAL kVA = **22**
CONNECTED AMPS PER PHASE **63** **71** **56** AVERAGE CONNECTED AMPS PER PHASE = **62**

NEC DIVERSIFIED LOAD CALCULATIONS

LIGHTING & CONTINUOUS LOADS: - 100% CONNECTED LOAD PLUS 25% DIVERSIFIED TOTAL kVA = **22**
RECEPTACLES: **3.8 kVA @ 100% = 3.8 kVA** - FIRST 10kVA @ 100%, REMAINDER @ 50% AVERAGE AMPS PER PHASE = **62**
ALL OTHER LOADS @ 100% : **18.7 kVA** - MOTOR TOTALS INCLUDED IN ALL OTHER LOADS WITH LARGEST MOTOR CALCULATED @ 125% PER NEC

CRSA
649 E. South Temple
Salt Lake City, UT 84102
801.355.5915

MWL
11798 N. Lakeridge Pkwy.
Ashland, VA 23005
804-228-7473

State of Utah
Department of Administrative Services
DFCM
Division of Facilities Construction & Management
4110 State Office Building
Salt Lake City, Utah 84114
Phone: (801) 538 - 3018
Fax: (801) 538 - 3267

DFCM APPROVAL STAMP

LICENSED PROFESSIONAL ENGINEER No. 181563 DAVID E. WESEMANN 04-21-2014 STATE OF UTAH

ARCHITECT-ENGINEER STAMP

Unified State Laboratory Module 2

4451 South 2700 West, Taylorsville, UT 84118

DFCM #: 13020300
Project #: B13-024

DATE:	ISSUE TYPE:
April 21, 2014	BID SET

MARK	DATE	DESCRIPTION
1	May 8, 2015	ADDENDUM #1

CHECKED BY	D. WESEMANN
DRAWN BY	DLM

PANEL SCHEDULES

EP614

VOLUME 2

C:\Users\dlm\Documents\20130362Elec Central_DLM (8432).rvt
5/7/2015 5:27:47 PM

PANEL: "1EH"

VOLTS/PHASE/WIRE:	PANEL SIZE & TYPE:	MAIN SIZE AND TYPE:	LOCATION:	CABINET:	NOTES:
480/277 V, 3 PH 4 WIRE	22" W x 6" D, FUSIBLE	225 AMPERE FUSE	ELECTRICAL 100M	SURFACE	

ACCESSORIES: PANEL DIRECTORY, IDENTIFICATION, GROUNDING BAR **AIC RATING:** 38,072 AIC

CKT	OCP		LOAD (kVA)				PHASE LOAD							LOAD (kVA)			OCP		CKT
NO	AMP	POLE	LTG	PWR	CO	DESCRIPTION	A		B		C		DESCRIPTION	CO	PWR	LTG	POLE	AMP	NO
1	20	1	2.3	0.0	0.0	LTG: OFFICE TECH/AUTOPSY	2.3	0.3					LTG: STAIR-1 100B (1ERA-1)	0.0	0.0	0.3	1	20	2
3	20	1	2.4	0.0	0.0	LTG: SALLYPORT/RECEIVING			2.4	0.4			LTG: STAIR-2 100F (1ERA-2)	0.0	0.0	0.4	1	20	4
5	20	1	1.9	0.0	0.0	LTG: AUTOPSY WRK STN (1ERA-9)					1.9	0.2	LTG: STAIR-3 100J (1ERA-3)	0.0	0.0	0.2	1	20	6
7	20	1	1.9	0.0	0.0	LTG: AUTOPSY WRK STN (1ERA-10)	1.9	1.9					LTG: LEVEL 1 CORRIDOR (1ERA-4)	0.0	0.0	1.7	1	20	8
9	20	1	1.9	0.0	0.0	LTG: AUTOPSY WRK STN (1ERA-11)			1.9	1.3			LTG: LEVEL 2 CORRIDOR (1ERA-5)	0.0	0.0	1.1	1	20	10
11	20	1	1.9	0.0	0.0	LTG: AUTOPSY WRK STN (1ERA-12)					1.9	0.8	LTG: LEVEL 3 CORRIDOR (1ERA-6)	0.0	0.0	0.7	1	20	12
13	20	1	1.9	0.0	0.0	LTG: AUTOPSY WRK STN (1ERA-13)	1.9	0.9					LTG: NE EXT EGRESS LIGHTS (1ERA-7)	0.0	0.0	0.9	1	20	14
15	20	1	1.9	0.0	0.0	LTG: AUTOPSY WRK STN (1ERA-14)			1.9	0.0			SPARE	--	--	--	1	20	16
17	20	1	1.9	0.0	0.0	LTG: AUTOPSY WRK STN (1ERA-15)					1.9	1.3	LTG: VEB/WAREHOUSE (1ERA-8)	0.0	0.0	1.3	1	20	18
19	20	1	1.9	0.0	0.0	LTG: AUTOPSY WRK STN (1ERA-16)	1.9	0.7					LTG: TUNNEL	0.0	0.0	0.7	1	20	20
21	20	1	1.9	0.0	0.0	LTG: AUTOPSY WRK STN (1ERA-17)			1.9	0.0			SPARE	--	--	--	1	20	22
23	20	1	2.4	0.0	0.0	LTG: AUTOPSY WRK STN (1ERA-18)					2.4	1.4	LTG: TISSUE RECOVERY 123	0.0	0.0	1.4	1	20	24
25	20	1	1.9	0.0	0.0	LTG: AUTOPSY WRK STN (1ERA-19)	1.9	1.4					LTG: TISSUE RECOVERY 123	0.0	0.0	1.4	1	20	26
27	20	1	2.4	0.0	0.0	LTG: AUTOPSY WRK STN (1ERA-20)			2.4	1.6			LTG: EVID VAULT, ELEC 206,200D	0.0	0.0	1.6	1	20	28
29	20	1	2.4	0.0	0.0	LTG: SPEC PRDCR AUTPSY RM...					2.4	1.8	LTG: AMP, EXTRCTNS RM 214,215	0.0	0.0	1.8	1	20	30
31	20	1	2.4	0.0	0.0	LTG: SPEC PRDCR AUTPSY RM...	2.4	1.5					LTG: RM 212, 212C, 211A, 211B, 211	0.0	0.0	1.5	1	20	32
33	20	1	1.4	0.0	0.0	LTG: BATHS, OPEN OFFICES 201-4			1.4	2.3			LTG: BIO/SEROLOGY, TRACE RM 213,A	0.0	0.0	2.3	1	20	34
35	20	1	1.6	0.0	0.0	LTG: EVIDENCE RECEIVING 208B					1.6	1.6	LTG: WET CHEM, GRIND RM 314,315	0.0	0.0	1.6	1	20	36
37	20	1	1.9	0.0	0.0	LTG: CHEMISTRY / TRACE 211	1.9	1.7					LTG: PEST LABS/CHEM OFFICE	0.0	0.0	1.7	1	20	38
39	20	1	1.1	0.0	0.0	ROOM 100F, 100G, 114, 105, 106,...			1.3	2.2			LTG: LEVEL 3 CORE RMS/DAIRY LABS	0.0	0.0	2.2	1	20	40
41	20	1	--	--	--	SPARE					0.0	1.5	LTG: MEAT LAB 313	0.0	0.0	1.5	1	20	42
43	20	1	--	--	--	SPARE	0.0	1.0					LTG: PENTHOUSE	0.0	0.0	1.0	1	20	44
45	20	1	--	--	--	SPARE			0.0	0.0			SPARE	--	--	--	1	20	46
47	20	1	--	--	--	SPARE					0.0	0.0	SPARE	--	--	--	1	20	48
49	20	1	--	--	--	SPARE	0.0	0.0					SPARE	--	--	--	1	20	50
51	20	1	--	--	--	SPARE			0.0	0.0			SPARE	--	--	--	1	20	52
53	20	1	--	--	--	SPARE					0.0	0.0	SPARE	--	--	--	1	20	54
55	20	3	0.0	0.8	0.0	MTR: FC-4 ELECTRICAL 100M	0.3	3.0					PANEL 1EL THRU XFMR T1E	0.0	18.0	0.0	3	50	56
57	--	--	--	--	--	--			0.3	7.5			--	--	--	--	--	--	58
59	--	--	--	--	--	--					0.3	7.5	--	--	--	--	--	--	60
TOTALS:						CONNECTED kVA PER PHASE	**27**		**29**		**29**		CONNECTED TOTAL kVA = **81**						
						CONNECTED AMPS PER PHASE	**97**		**105**		**104**		AVERAGE CONNECTED AMPS PER PHASE = **98**						

NEC DIVERSIFIED LOAD CALCULATIONS

LIGHTING & CONTINUOUS LOADS: **64.8 kVA @ 125% = 81.0 kVA** - 100% CONNECTED LOAD PLUS 25% DIVERSIFIED TOTAL kVA = **98**
RECEPTACLES: - FIRST 10kVA @ 100%, REMAINDER @ 50% AVERAGE AMPS PER PHASE = **118**
ALL OTHER LOADS @ 100% : **16.0 kVA** - MOTOR TOTALS INCLUDED IN ALL OTHER LOADS WITH LARGEST MOTOR CALCULATED @ 125% PER NEC

PANEL: "1HB"

VOLTS/PHASE/WIRE:	PANEL SIZE & TYPE:	MAIN SIZE AND TYPE:	LOCATION:	CABINET:	NOTES:
480/277 V, 3 PH 4 WIRE	22" W x 6" D, BOLT-ON	225 AMPERE LUG	ELECTRICAL 100L	SURFACE	

ACCESSORIES: PANEL DIRECTORY, IDENTIFICATION, GROUNDING BAR **AIC RATING:** 41,639 AIC

CKT	OCP		LOAD (kVA)				PHASE LOAD							LOAD (kVA)			OCP		CKT
NO	AMP	POLE	LTG	PWR	CO	DESCRIPTION	A		B		C		DESCRIPTION	CO	PWR	LTG	POLE	AMP	NO
1	20	1	2.3	0.0	0.0	LTG: SW OFCS 130A-K, STOR 126B	2.2	2.6					LTG: HALL 100K (1RB-1)	0.0	0.0	2.6	1	20	2
3	20	1	2.2	0.0	0.0	LTG: SW LARGE OPEN OFFICE			2.2	0.0			LTG: EXTERIOR CANOPY (1RB-2)	0.0	0.0	0.0	1	20	4
5	20	1	1.9	0.0	0.0	LTG: BRK RM, BATHROOMS, 104-106					1.9	0.4	LTG: NW EXTERIOR LIGHTS (1RB-3)	0.0	0.0	0.3	1	20	6
7	20	1	2.4	0.0	0.0	LTG: VEB 1 112	2.4	1.4					LTG: DRIVEWAY SITE LIGHTS (1RB-4)	0.0	0.0	1.4	1	20	8
9	20	1	2.4	0.0	0.0	LTG: VEB 2 113			2.4	1.7			LTG: DRIVEWAY SITE LIGHTS (1RB-5)	0.0	0.0	1.7	1	20	10
11	20	1	1.9	0.0	0.0	LTG: BODY RECEIVING/RELEASE...					1.9	1.4	LTG: DRIVEWAY SITE LIGHTS (1RB-6)	0.0	0.0	1.4	1	20	12
13	20	1	2.4	0.0	0.0	LTG: LOCKER ROOMS, HISTLGY...	2.3	1.0					LTG: BACK PRKNG CANOPY (1RB-7)	0.0	0.0	1.0	1	20	14
15	20	1	2.2	0.0	0.0	LTG: SALLY PORT 121			2.2	1.5			LTG: OFFICES, CONF; ROOM 102A-F	0.0	0.0	1.5	1	20	16
17	20	1	1.9	0.0	0.0	LTG: PROPERTY LOCKERS 118					1.9	3.3	LTG: HDLE, FAM, OFCS, ARCH, CONF	0.0	0.0	3.3	1	20	18
19	20	1	1.4	0.0	0.0	LTG: X-RAY & SPEC AUTOPSY...	1.4	2.3					LTG: VEB SUPPORT AREA....	0.0	0.0	2.3	1	20	20
21	20	1	1.2	0.0	0.0	LTG: RECEIVING VEST, NGT RM 117			1.2	2.6			LTG: AUTOPSY CIRCULATION 124	0.0	0.0	2.6	1	20	22
23	20	3	0.0	1.2	0.0	MTR: DEF-4 SALLY PORT 121					0.4	1.6	LTG: MORGUE TECH 120	0.0	0.0	1.6	1	20	24
25	--	--	--	--	--	--	0.4	0.6					LTG: ASSIST 102	0.0	0.0	0.6	1	20	26
27	--	--	--	--	--	--			0.4	0.0			SPARE	--	--	--	1	20	28
29	20	1	2.4	0.0	0.0	LTG: VEB EXTERIOR CANOPY					2.4	0.0	SPARE	--	--	--	1	20	30
31	20	3	0.0	0.8	0.0	MTR: FC-3 ELECTRICAL 100L	0.3	0.0					SPARE	--	--	--	1	20	32
33	--	--	--	--	--	--			0.3	3.2			MTR: (AC-1) VEB 2 113	0.0	9.5	0.0	3	20	34
35	--	--	--	--	--	--					0.3	3.2	--	--	--	--	--	--	36
37	20	1	--	--	--	SPARE	0.0	3.2					--	--	--	--	--	--	38
39	20	1	--	--	--	SPARE			0.0	0.0			SPARE	--	--	--	1	20	40
41	20	1	--	--	--	SPARE					0.0	0.0	SPARE	--	--	--	1	20	42
43	20	1	--	--	--	SPARE	0.0	0.0					SPARE	--	--	--	1	20	44
45	20	1	--	--	--	SPARE			0.0	0.0			SPARE	--	--	--	1	20	46
47	20	1	--	--	--	SPARE					0.0	0.0	SPARE	--	--	--	1	20	48
49	20	1	--	--	--	SPARE	0.0	0.0					SPARE	--	--	--	1	20	50
51	20	1	--	--	--	SPARE			0.0	0.0			SPARE	--	--	--	1	20	52
53	20	1	--	--	--	SPARE					0.0	0.0	SPARE	--	--	--	1	20	54
55	20	1	--	--	--	SPARE	0.0	0.0					SPARE	--	--	--	1	20	56
57	20	1	--	--	--	SPARE			0.0	0.0			SPARE	--	--	--	1	20	58
59	20	1	--	--	--	SPARE					0.0	0.0	SPARE	--	--	--	1	20	60
TOTALS:						CONNECTED kVA PER PHASE	**20**		**18**		**19**		CONNECTED TOTAL kVA = **56**						
						CONNECTED AMPS PER PHASE	**73**		**64**		**68**		AVERAGE CONNECTED AMPS PER PHASE = **68**						

NEC DIVERSIFIED LOAD CALCULATIONS

LIGHTING & CONTINUOUS LOADS: **44.8 kVA @ 125% = 56.1 kVA** - 100% CONNECTED LOAD PLUS 25% DIVERSIFIED TOTAL kVA = **70**
RECEPTACLES: - FIRST 10kVA @ 100%, REMAINDER @ 50% AVERAGE AMPS PER PHASE = **84**
ALL OTHER LOADS @ 100% : **13.9 kVA** - MOTOR TOTALS INCLUDED IN ALL OTHER LOADS WITH LARGEST MOTOR CALCULATED @ 125% PER NEC

PANEL: "1EL"

VOLTS/PHASE/WIRE:	PANEL SIZE & TYPE:	MAIN SIZE AND TYPE:	LOCATION:	CABINET:	NOTES:
120/208V, 3 PH 4 WIRE	22" W x 6" D, BOLT-ON	100 AMPERE MAIN FUSE	ELECTRICAL 100M	SURFACE	FUSIBLE

ACCESSORIES: PANEL DIRECTORY, IDENTIFICATION, GROUNDING BAR **AIC RATING:** 21,067 AIC

CKT	OCP		LOAD (kVA)				PHASE LOAD							LOAD (kVA)			OCP		CKT
NO	AMP	POLE	LTG	PWR	CO	DESCRIPTION	A		B		C		DESCRIPTION	CO	PWR	LTG	POLE	AMP	NO
1	20	1	0.0	0.5	0.0	FIRE ALARM PNL FSA - LOBBY 100A	0.5	0.5					FIRE ALARM PANEL FCP IT 100G	0.0	0.5	0.0	1	20	2
3	20	1	--	--	--	SPARE			0.0	0.0			SPARE	--	--	--	1	20	4
5	20	1	--	--	--	SPARE					0.0	0.0	SPARE	--	--	--	1	20	6
7	20	1	0.0	0.5	0.0	FIRE ALARM PANEL FSA - VEST...	0.5	0.5					FIRE ALARM PANEL FPS - IT 200B	0.0	0.5	0.0	1	20	8
9	20	1	--	--	--	SPARE			0.0	0.0			SPARE	--	--	--	1	20	10
11	20	1	--	--	--	SPARE					0.0	0.0	SPARE	--	--	--	1	20	12
13	20	1	0.0	0.5	0.0	PWR: (PAFP) - HALL 200K	0.5	0.5					FIRE ALARM PANEL FPS - IT 300D	0.0	0.5	0.0	1	20	14
15	20	1	--	--	--	SPARE			0.0	0.0			SPARE	--	--	--	1	20	16
17	20	1	--	--	--	SPARE					0.0	0.0	SPARE	--	--	--	1	20	18
19	20	1	--	--	--	SPARE	0.0	0.0					SPARE	--	--	--	1	20	20
21	20	1	--	--	--	SPARE			0.0	0.0			SPARE	--	--	--	1	20	22
23	20	1	--	--	--	SPARE					0.0	0.0	SPARE	--	--	--	1	20	24
25	20	1	--	--	--	SPARE	0.0	0.0					SPARE	--	--	--	1	20	26
27	20	1	--	--	--	SPARE			0.0	0.0			SPARE	--	--	--	1	20	28
29	20	1	--	--	--	SPARE					0.0	0.0	SPARE	--	--	--	1	20	30
31	20	1	--	--	--	SPARE	0.0	0.0					SPARE	--	--	--	1	20	32
33	20	1	--	--	--	SPARE			0.0	0.0			SPARE	--	--	--	1	20	34
35	20	1	--	--	--	SPARE					0.0	0.0	SPARE	--	--	--	1	20	36
37	20	1	--	--	--	SPARE	0.0	0.0					SPARE	--	--	--	1	20	38
39	20	1	--	--	--	SPARE			0.0	7.5			PWR: GEN AUXILIARY PANEL	0.0	15.0	0.0	2	20	40
41	20	1	--	--	--	SPARE					0.0	7.5	--	--	--	--	--	--	42
TOTALS:						CONNECTED kVA PER PHASE	**3**		**8**		**8**		CONNECTED TOTAL kVA = **15**						
						CONNECTED AMPS PER PHASE	**25**		**68**		**68**		AVERAGE CONNECTED AMPS PER PHASE = **42**						

NEC DIVERSIFIED LOAD CALCULATIONS

LIGHTING & CONTINUOUS LOADS: - 100% CONNECTED LOAD PLUS 25% DIVERSIFIED TOTAL kVA = **15**
RECEPTACLES: - FIRST 10kVA @ 100%, REMAINDER @ 50% AVERAGE AMPS PER PHASE = **42**
ALL OTHER LOADS @ 100% : **15.0 kVA** - MOTOR TOTALS INCLUDED IN ALL OTHER LOADS WITH LARGEST MOTOR CALCULATED @ 125% PER NEC

PANEL: "1LA1"

VOLTS/PHASE/WIRE:	PANEL SIZE & TYPE:	MAIN SIZE AND TYPE:	LOCATION:	CABINET:	NOTES:
120/208V, 3 PH 4 WIRE	22" W x 6" D, BOLT-ON	225 AMPERE MAIN LUG	ELEC 100D	SURFACE	

ACCESSORIES: PANEL DIRECTORY, IDENTIFICATION, GROUNDING BAR **AIC RATING:** 10,071 AIC

CKT	OCP		LOAD (kVA)				PHASE LOAD							LOAD (kVA)			OCP		CKT
NO	AMP	POLE	LTG	PWR	CO	DESCRIPTION	A		B		C		DESCRIPTION	CO	PWR	LTG	POLE	AMP	NO
1	20	1	0.0	0.0	1.1	CO: ROOM 130G, 130H	1.1	0.4					CO: OPEN OFFICE CNTR-TOP RM 130	0.4	0.0	0.0	1	20	2
3	20	1	0.0	0.0	1.3	CO: ROOM 130J, 130K			1.3	0.7			CO: OPEN OFFICE CNTR-TOP RM 130	0.7	0.0	0.0	1	20	4
5	20	1	0.0	0.0	1.1	CO: ROOM 130F, 130E					1.1	0.9	PWR/CO: AV MONITOR CONF 133	0.4	0.5	0.0	1	20	6
7	20	1	0.0	0.0	1.1	CO: ROOM 130D, 130C	1.1	0.5					CO: ROOM 101A, 101	0.5	0.0	0.0	1	20	8
9	20	1	0.0	0.0	1.1	CO: ROOM 130N, 130M			1.1	0.5			CO: ASSIST 102	0.5	0.0	0.0	1	20	10
11	20	1	0.0	0.0	0.5	CO: MANAG. SERVICE COOR. 130L					0.5	0.4	CO: HALL 102J	0.4	0.0	0.0	1	20	12
13	20	1	0.0	0.0	1.3	CO: ROOM 102A, 102B	1.3	0.9					CO: ROOM 100B, 100A, 100K, 103	0.9	0.0	0.0	1	20	14
15	20	1	0.0	0.0	1.1	CO: ROOM 102C, 102D			1.1	0.4			CO: ROOM 139, 137	0.4	0.0	0.0	1	20	16
17	20	1	0.0	0.0	1.1	CO: ROOM 102E, 102H					1.1	0.5	CO: HUDDLE 134	0.5	0.0	0.0	1	20	18
19	20	1	0.0	0.0	0.5	CO: OFFICE TECH 130	0.5	0.7					CO: RECEPTION STATION 130P	0.7	0.0	0.0	1	20	20
21	20	1	0.0	0.8	0.0	PWR: AV RACK CONF ROOM 102F			0.8	1.5			CO: RECEPTION STATION 130P	0.0	1.5	0.0	1	20	22
23	20	1	0.0	0.0	0.4	CO: RECEPTION STATION 130P					0.4	0.7	PWR/CO: LOBBY 100A	0.2	0.5	0.0	1	20	24
25	20	1	0.0	0.0	0.4	CO: ROOM 138A, 138	0.4	0.9					PWR/CO: FAMILY 136	0.9	0.0	0.0	1	20	26
27	20	1	0.0	0.0	0.9	PWR/CO: FAMILY 135			0.9	0.7			CO: ROOM 130Q, 132	0.7	0.0	0.0	1	20	28
29	20	1	0.0	0.7	0.0	CO: LOBBY 100A					0.7	1.3	CO: ROOM 100K, 102J, 102G, 102	0.9	0.4	0.0	1	20	30
31	20	1	0.1	0.0	0.4	CO/LTG: CONFERENCE ROOM 102F	0.4	0.5					PWR: AV MNT CONF RM 102F	0.0	0.5	0.0	1	20	32
33	20	1	0.0	0.0	1.0	PWR: SCREEN AND PROJECTOR			1.0	0.2			CO: CONFERENCE ROOM 102F	0.2	0.0	0.0	1	20	34
35	20	1	0.0	0.0	1.0	PWR: SCREEN AND PROJECTOR					1.0	0.7	CO: ROOM 131A, 131	0.2	0.5	0.0	1	20	36
37	20	1	0.0	0.0	0.7	CO: ROOM 126B, 130	0.7	0.5					CO: CONFERENCE 131	0.5	0.0	0.0	1	20	38
39	20	1	0.0	0.0	0.7	CO: ASSIT. ME 130A			0.7	0.4			CO: OFFICE TECH 130	0.4	0.0	0.0	1	20	40
41	20	1	0.0	0.0	0.4	CO: MAIL 103					0.4	0.2	PWR: HEAT TRACE (NOTE 1)	0.0	0.2	0.0	1	20	42
43	20	1	0.0	0.3	0.0	PWR: FURNITURE	0.3	0.5					PWR: FURNITURE	0.0	0.5	0.0	1	20	44
45	20	3	0.0	0.8	0.0	PWR: FURNITURE			0.3	0.4			PWR: FURNITURE	0.0	1.1	0.0	3	20	46
47	--	--	--	--	--	--					0.3	0.4	--	--	--	--	--	--	48
49	--	--	--	--	--	--	0.3	0.4					--	--	--	--	--	--	50
51	20	1	0.0	0.0	0.2	CO: EXT WEST ENTRANCE			0.2	0.3			PWR: FURNITURE	0.0	0.3	0.0	1	20	52
53	20	1	0.0	1.1	0.0	MTR: (CUH-1) VEST 100					1.1	0.3	PWR: FURNITURE	0.0	0.8	0.0	3	20	54
55	20	1	0.0	1.1	0.0	MTR: (CUH-2) STAIR-1 100B	1.1	0.3					--	--	--	--	--	--	56
57	20	1	0.0	0.0	0.2	CO: MEETING 101			0.2	0.3			--	--	--	--	--	--	58
59	20	1	0.0	0.0	0.5	PWR: AV MONITOR HUDDLE 102H					0.5	0.7	PWR/CO: AV MONITOR HUDDLE 134	0.7	0.0	0.0	1	20	60
61	20	1	0.0	0.5	0.0	PWR: FLR BOX CONF 133	0.5	0.8					PWR: AV RACK LIBRARY 131A	0.0	0.8	0.0	1	20	62
63	20	1	0.0	1.5	0.0	PWR: SPACE SAVER EVID...			1.5	0.0			SPARE	--	--	--	1	20	64
65	20	1	0.0	1.5	0.0	PWR: SPACE SAVER ARCHIVE 132					1.5	0.0	SPARE	--	--	--	1	20	66
67	20	1	0.0	2.8	0.0	PWR: MOTORIZED SHADES CONF...	2.8	0.0					SPARE	--	--	--	1	20	68
69	20	1	--	--	--	SPARE			0.0	0.0			SPARE	--	--	--	1	20	70
71	20	1	--	--	--	SPARE					0.0	0.0	SPARE	--	--	--	1	20	72
73	20	1	--	--	--	SPARE	0.0	0.0					SPARE	--	--	--	1	20	74
75	20	1	--	--	--	SPARE			0.0	0.0			SPARE	--	--	--	1	20	76
77	20	1	--	--	--	SPARE					0.0	0.0	SPARE	--	--	--	1	20	78
79	20	1	--	--	--	SPARE	0.0	0.0					SPARE	--	--	--	1	20	80
81	20	1	--	--	--	SPARE			0.0	0.0			SPARE	--	--	--	1	20	82
83	20	1	--	--	--	SPARE					0.0	0.0	SPARE	--	--	--	1	20	84
TOTALS:						CONNECTED kVA PER PHASE	**17**		**14**		**14**		CONNECTED TOTAL kVA = **45**						
						CONNECTED AMPS PER PHASE	**140**		**118**		**120**		AVERAGE CONNECTED AMPS PER PHASE = **126**						

NEC DIVERSIFIED LOAD CALCULATIONS

LIGHTING & CONTINUOUS LOADS: **0.1 kVA @ 125% = 0.1 kVA** - 100% CONNECTED LOAD PLUS 25% DIVERSIFIED TOTAL kVA = **37**
RECEPTACLES: **26.7 kVA @ 69% = 18.3 kVA** - FIRST 10kVA @ 100%, REMAINDER @ 50% AVERAGE AMPS PER PHASE = **104**
ALL OTHER LOADS @ 100% : **18.9 kVA** - MOTOR TOTALS INCLUDED IN ALL OTHER LOADS WITH LARGEST MOTOR CALCULATED @ 125% PER NEC

Notes:

1. 30mA GFCI CIRCUIT BREAKER.

CRSA
649 E. South Temple
Salt Lake City, UT 84102
801.355.5915

MWL
11798 N. Lakeridge Pkwy.
Ashland, VA 23005
804-228-7473

State of Utah
Department of Administrative Services
Division of Facilities Construction & Management
4110 State Office Building
Salt Lake City, Utah 84114
Phone: (801) 538 - 3018
Fax: (801) 538 - 3267

DFCM APPROVAL STAMP

LICENSED PROFESSIONAL ENGINEER
No. 181563
DAVID E. WESEMANN
04-21-2014
STATE OF UTAH

ARCHITECT-ENGINEER STAMP

Unified State Laboratory Module 2

4451 South 2700 West, Taylorsville, UT 84118

DFCM #: 13020300

Project #: B13-024

DATE:	ISSUE TYPE:
April 21, 2014	BID SET

MARK	DATE	DESCRIPTION
1	May 8, 2015	ADDENDUM #1

CHECKED BY	D. WESEMANN
DRAWN BY	DLM

PANEL SCHEDULES

EP615

VOLUME 2

C:\Users\dlm\Documents\20130362Elec Central_DLM (8432).rvt
5/7/2015 5:27:50 PM

PANEL: "2CLB4"

VOLTS/PHASE/WIRE:	PANEL SIZE & TYPE:	MAIN SIZE AND TYPE:	LOCATION:	CABINET:	NOTES:
120/208V, 3 PH 4 WIRE	22" W x 6" D, BOLT-ON	150 AMPERE MAIN CB	VEST 200M	RECESSED	

ACCESSORIES: PANEL DIRECTORY, IDENTIFICATION, GROUNDING BAR **AIC RATING:** 7,936 AIC

CKT	OCP		LOAD (kVA)				PHASE LOAD							LOAD (kVA)			OCP		CKT
NO	AMP	POLE	LTG	PWR	CO	DESCRIPTION	A		B		C		DESCRIPTION	CO	PWR	LTG	POLE	AMP	NO
1	20	1	0.0	0.0	0.4	CO: ID / IMPRESSIONS 212	0.4	0.4					CO: ID / IMPRESSIONS 212	0.4	0.0	0.0	1	20	2
3	20	1	0.0	0.0	0.4	CO: ID / IMPRESSIONS 212			0.4	0.4			CO: ID / IMPRESSIONS 212	0.4	0.0	0.0	1	20	4
5	20	1	0.0	0.0	0.4	CO: ID / IMPRESSIONS 212					0.4	0.2	CO: ID / IMPRESSIONS 212	0.2	0.0	0.0	1	20	6
7	20	1	0.0	0.0	0.4	CO: ID / IMPRESSIONS 212	0.4	0.2					CO: ID / IMPRESSIONS 212	0.2	0.0	0.0	1	20	8
9	20	1	0.0	0.0	0.2	CO: ID / IMPRESSIONS 212			0.2	0.4			CO: ID / IMPRESSIONS 212	0.4	0.0	0.0	1	20	10
11	20	1	0.0	0.0	0.5	CO: ID / IMPRESSIONS 212					0.5	0.4	CO: VEST 200M	0.4	0.0	0.0	1	20	12
13	20	1	0.0	0.0	0.4	CO: PHOTO 1 212A	0.4	0.4					CO: PHOTO 3 212C	0.4	0.0	0.0	1	20	14
15	20	1	0.0	0.0	0.4	CO: PHOTO 2 212B			0.4	0.4			CO: PHOTO 3 212C	0.4	0.0	0.0	1	20	16
17	20	1	0.0	1.9	0.0	PWR: MECH CTRL POWER					1.9	0.0	SPARE	--	--	--	1	20	18
19	20	1	0.0	0.0	0.4	CO: ID / IMPRESSIONS 212	0.4	0.4					CO: ID / IMPRESSIONS 212	0.4	0.0	0.0	1	20	20
21	20	1	--	--	--	SPARE			0.0	1.9			PWR: MECH CTRL POWER	0.0	1.9	0.0	1	20	22
23	20	1	--	--	--	SPARE					0.0	0.0	SPARE	--	--	--	1	20	24
25	20	1	0.0	1.1	0.0	PWR: (R2) ID / IMPRESSIONS 212	1.1	0.0					SPARE	--	--	--	1	20	26
27	20	1	--	--	--	SPARE			0.0	0.0			SPARE	--	--	--	1	20	28
29	20	1	--	--	--	SPARE					0.0	0.0	SPARE	--	--	--	1	20	30
31	20	1	--	--	--	SPARE	0.0	0.0					SPARE	--	--	--	1	20	32
33	20	1	--	--	--	SPARE			0.0	0.0			SPARE	--	--	--	1	20	34
35	20	1	--	--	--	SPARE					0.0	0.0	SPARE	--	--	--	1	20	36
37	20	1	--	--	--	SPARE	0.0	0.0					SPARE	--	--	--	1	20	38
39	20	1	--	--	--	SPARE			0.0	0.0			SPARE	--	--	--	1	20	40
41	20	1	--	--	--	SPARE					0.0	0.0	SPARE	--	--	--	1	20	42
43	20	1	--	--	--	SPARE	0.0	0.0					SPARE	--	--	--	1	20	44
45	20	1	--	--	--	SPARE			0.0	0.0			SPARE	--	--	--	1	20	46
47	20	1	--	--	--	SPARE					0.0	0.0	SPARE	--	--	--	1	20	48
49	20	1	--	--	--	SPARE	0.0	0.0					SPARE	--	--	--	1	20	50
51	20	1	--	--	--	SPARE			0.0	0.0			SPARE	--	--	--	1	20	52
53	20	1	--	--	--	SPARE					0.0	0.0	SPARE	--	--	--	1	20	54
55	20	1	--	--	--	SPARE	0.0	0.0					SPARE	--	--	--	1	20	56
57	20	1	--	--	--	SPARE			0.0	0.0			SPARE	--	--	--	1	20	58
59	20	1	--	--	--	SPARE					0.0	0.0	SPARE	--	--	--	1	20	60

TOTALS:					
CONNECTED kVA PER PHASE	4	4	3	CONNECTED TOTAL kVA =	11
CONNECTED AMPS PHASE	33	33	28	AVERAGE CONNECTED AMPS PER PHASE =	31

NEC DIVERSIFIED LOAD CALCULATIONS

LIGHTING & CONTINUOUS LOADS:
RECEPTACLES: **6.1 kVA @ 100% = 6.1 kVA**
ALL OTHER LOADS @ 100% : **4.9 kVA**

- 100% CONNECTED LOAD PLUS 25%
- FIRST 10kVA @ 100%, REMAINDER @ 50%
- MOTOR TOTALS INCLUDED IN ALL OTHER LOADS WITH LARGEST MOTOR CALCULATED @ 125% PER NEC

DIVERSIFIED TOTAL kVA = **11**
AVERAGE AMPS PER PHASE = **31**

PANEL: "2LA1"

VOLTS/PHASE/WIRE:	PANEL SIZE & TYPE:	MAIN SIZE AND TYPE:	LOCATION:	CABINET:	NOTES:
120/208V, 3 PH 4 WIRE	22" W x 6" D, BOLT-ON	225 AMPERE MAIN LUG	ELEC 200T	(SURFACE) 1	

ACCESSORIES: PANEL DIRECTORY, IDENTIFICATION, GROUNDING BAR **AIC RATING:** 9,815 AIC

CKT	OCP		LOAD (kVA)				PHASE LOAD							LOAD (kVA)			OCP		CKT
NO	AMP	POLE	LTG	PWR	CO	DESCRIPTION	A		B		C		DESCRIPTION	CO	PWR	LTG	POLE	AMP	NO
1	20	1	0.0	0.0	1.1	CO: ROOM 201B, 201A	1.1	0.7					CO: ROOM 200A, 200, 217	0.7	0.0	0.0	1	20	2
3	20	1	0.0	0.0	1.1	CO: ROOM 201C, 201D			1.1	0.5			CO: HALL 200	0.5	0.0	0.0	1	20	4
5	20	1	0.0	0.0	0.7	CO: CODIS 216					0.7	0.9	CO: CODIS 216	0.9	0.0	0.0	1	20	6
7	20	1	0.0	0.0	0.7	CO: OPEN SPACE 201	0.7	0.8					PWR: FURNITURE OPEN SPACE 201	0.0	0.8	0.0	1	20	8
9	20	1	0.0	0.5	0.0	PWR: FURNITURE OPEN SPACE 201			0.5	1.6			PWR: FURNITURE OPEN SPACE 201	0.0	1.6	0.0	3	20	10
11	20	3	0.0	1.4	0.0	PWR: FURNITURE OPEN SPACE 201					1.4	0.0	--	--	--	--	--	--	12
13	--	--	--	--	--	--	0.0	0.0					--	--	--	--	--	--	14
15	--	--	--	--	--	--			0.0	1.1			PWR: FURNITURE OPEN SPACE 201	0.0	1.1	0.0	1	20	16
17	20	1	0.0	0.5	0.0	PWR: TV MONITOR HALL 200					0.5	1.1	PWR: FURNITURE OPEN SPACE 201	0.0	1.1	0.0	3	20	18
19	20	1	0.0	0.5	0.0	PWR: TV MONITOR HALL 200	0.5	0.0					--	--	--	--	--	--	20
21	20	1	0.0	1.1	0.0	MTR: (CUH-6) STAIR-1 200A			1.1	0.0			--	--	--	--	--	--	22
23	20	1	0.0	1.5	0.0	PWR: SPACE SAVER CODIS 216					1.5	0.0	SPARE	--	--	--	1	20	24
25	20	1	0.0	0.0	0.2	CO: HUDDLE 217	0.2	0.0					SPARE	--	--	--	1	20	26
27	20	1	--	--	--	SPARE			0.0	0.0			SPARE	--	--	--	1	20	28
29	20	1	--	--	--	SPARE					0.0	0.0	SPARE	--	--	--	1	20	30
31	20	1	--	--	--	SPARE	0.0	0.0					SPARE	--	--	--	1	20	32
33	20	1	--	--	--	SPARE			0.0	0.0			SPARE	--	--	--	1	20	34
35	20	1	--	--	--	SPARE					0.0	0.0	SPARE	--	--	--	1	20	36
37	20	1	--	--	--	SPARE	0.0	0.0					SPARE	--	--	--	1	20	38
39	20	1	--	--	--	SPARE			0.0	0.0			SPARE	--	--	--	1	20	40
41	20	1	--	--	--	SPARE					0.0	0.0	SPARE	--	--	--	1	20	42

TOTALS:					
CONNECTED kVA PER PHASE	4	6	6	CONNECTED TOTAL kVA =	16
CONNECTED AMPS PER PHASE	33	52	53	AVERAGE CONNECTED AMPS PER PHASE =	44

NEC DIVERSIFIED LOAD CALCULATIONS

LIGHTING & CONTINUOUS LOADS:
RECEPTACLES: **5.9 kVA @ 100% = 5.9 kVA**
ALL OTHER LOADS @ 100% : **10.3 kVA**

- 100% CONNECTED LOAD PLUS 25%
- FIRST 10kVA @ 100%, REMAINDER @ 50%
- MOTOR TOTALS INCLUDED IN ALL OTHER LOADS WITH LARGEST MOTOR CALCULATED @ 125% PER NEC

DIVERSIFIED TOTAL kVA = **16**
AVERAGE AMPS PER PHASE = **45**

PANEL: "2HB"

VOLTS/PHASE/WIRE:	PANEL SIZE & TYPE:	MAIN SIZE AND TYPE:	LOCATION:	CABINET:	NOTES:
480/277 V, 3 PH 4 WIRE	22" W x 6" D, BOLT-ON	225 AMPERE LUG	ELECTRICAL 200D	SURFACE	

ACCESSORIES: PANEL DIRECTORY, IDENTIFICATION, GROUNDING BAR **AIC RATING:** 37,872 AIC

CKT	OCP		LOAD (kVA)				PHASE LOAD							LOAD (kVA)			OCP		CKT
NO	AMP	POLE	LTG	PWR	CO	DESCRIPTION	A		B		C		DESCRIPTION	CO	PWR	LTG	POLE	AMP	NO
1	20	1	2.4	0.0	0.0	LTG: INSTRUMENT LAB 211B	2.4	1.0					LTG: LEVEL 2 HALL 200 (2RB-1)	0.0	0.0	1.0	1	20	2
3	20	1	1.9	0.0	0.0	LTG: SEM. 211A			1.9	1.0			LTG: CODIS, HUDDLE RM 216, 217	0.0	0.0	1.0	1	20	4
5	20	1	2.2	0.0	0.0	LTG: PHOTO 3 212C					2.2	3.6	LTG: OPEN OFFICE 201	0.0	0.0	3.6	1	20	6
7	20	1	2.7	0.0	0.0	LIGHTING CHEMISTRY / TRACE 211	2.7	1.4					LTG: ID OFFICE 202	0.0	0.0	1.4	1	20	8
9	20	1	3.5	0.0	0.0	LTG: ID / IMPRESSIONS 212			3.5	3.6			LTG: EVIDENCE RECEIVING 208B	0.0	0.0	3.6	1	20	10
11	20	1	3.3	0.0	0.0	LIGHTING ID / IMPRESSIONS 212					3.3	1.6	LTG: FA LAB 205	0.0	0.0	1.6	1	20	12
13	20	1	1.9	0.0	0.0	LTG: EAST BIO/SER, TRACE 1 213,B	1.9	1.9					LTG: GUN VAULT 205A	0.0	0.0	1.9	1	20	14
15	20	1	2.2	0.0	0.0	LTG: BIO/SEROLOGY 213			2.1	3.1			LTG: GUN RANGE 205D	0.0	0.0	3.1	1	20	16
17	20	1	0.7	0.0	0.0	LTG: MEN WOMEN'S RM 203, 204					0.7	3.3	LIGHTING EVID VAULT 206	0.0	0.0	3.3	1	20	18
19	20	1	3.4	0.0	0.0	LTG: EXTRACTIONS 215	3.4	2.2					LTG: CHEM/TRACE OFFICE 209	0.0	0.0	2.2	1	20	20
21	20	1	2.4	0.0	0.0	LTG: AMP 214			2.4	1.0			LTG: HALL 200F	0.0	0.0	1.0	1	20	22
23	20	1	2.5	0.0	0.0	LTG: CHEMISTRY / TRACE 211					2.5	2.3	LTG: RM 213, 213C	0.0	0.0	2.3	1	20	24
25	20	1	2.7	0.0	0.0	LTG: RM 213, 200Q	2.7	0.0					SPARE	--	--	--	1	20	26
27	20	1	--	--	--	SPARE			0.0	0.0			SPARE	--	--	--	1	20	28
29	20	1	--	--	--	SPARE					0.0	0.0	SPARE	--	--	--	1	20	30
31	20	1	--	--	--	SPARE	0.0	0.0					SPARE	--	--	--	1	20	32
33	20	1	--	--	--	SPARE			0.0	0.0			SPARE	--	--	--	1	20	34
35	20	1	--	--	--	SPARE					0.0	0.0	SPARE	--	--	--	1	20	36
37	20	1	--	--	--	SPARE	0.0	0.0					SPARE	--	--	--	1	20	38
39	20	1	--	--	--	SPARE			0.0	0.0			SPARE	--	--	--	1	20	40
41	20	1	--	--	--	SPARE					0.0	0.0	SPARE	--	--	--	1	20	42

TOTALS:					
CONNECTED kVA PER PHASE	20	19	19	CONNECTED TOTAL kVA =	58
CONNECTED AMPS PER PHASE	71	67	71	AVERAGE CONNECTED AMPS PER PHASE =	69

NEC DIVERSIFIED LOAD CALCULATIONS

LIGHTING & CONTINUOUS LOADS: **57.7 kVA @ 125% = 72.1 kVA**
RECEPTACLES:
ALL OTHER LOADS @ 100% : **0.0 kVA**

- 100% CONNECTED LOAD PLUS 25%
- FIRST 10kVA @ 100%, REMAINDER @ 50%
- MOTOR TOTALS INCLUDED IN ALL OTHER LOADS WITH LARGEST MOTOR CALCULATED @ 125% PER NEC

DIVERSIFIED TOTAL kVA = **72**
AVERAGE AMPS PER PHASE = **87**

PANEL: "2LA2"

VOLTS/PHASE/WIRE:	PANEL SIZE & TYPE:	MAIN SIZE AND TYPE:	LOCATION:	CABINET:	NOTES:
120/208V, 3 PH 4 WIRE	22" W x 6" D, BOLT-ON	150 AMPERE MAIN CB	D.V. 214A	RECESSED	

ACCESSORIES: PANEL DIRECTORY, IDENTIFICATION, GROUNDING BAR **AIC RATING:** 8,251 AIC

CKT	OCP		LOAD (kVA)				PHASE LOAD							LOAD (kVA)			OCP		CKT
NO	AMP	POLE	LTG	PWR	CO	DESCRIPTION	A		B		C		DESCRIPTION	CO	PWR	LTG	POLE	AMP	NO
1	20	1	0.0	0.0	0.4	CO: D.V. 214A	0.4	0.5					CO: AMP 214	0.5	0.0	0.0	1	20	2
3	20	1	0.0	0.2	0.0	PWR: (B2) AMP 214			0.2	0.5			PWR: (B1) AMP 214	0.0	0.5	0.0	1	20	4
5	20	1	0.0	0.2	0.0	PWR: (B2) AMP 214					0.2	0.5	PWR: (B1) AMP 214	0.0	0.5	0.0	1	20	6
7	20	1	0.0	0.5	0.0	PWR: (B1) AMP 214	0.5	0.5					PWR: (B1) AMP 214	0.0	0.5	0.0	1	20	8
9	20	1	0.0	0.5	0.0	PWR: (B1) AMP 214			0.5	0.5			PWR: (B1) AMP 214	0.0	0.5	0.0	1	20	10
11	20	1	0.0	0.0	0.5	CO: AMP 214					0.5	1.8	PWR: (B3) AMP 214	0.0	1.8	0.0	1	20	12
13	20	1	0.0	0.5	0.0	PWR: (B1) AMP 214	0.5	0.4					CO: AMP 214	0.4	0.0	0.0	1	20	14
15	20	1	0.0	0.5	0.0	PWR: (B1) AMP 214			0.5	0.2			CO: D.V. 214A	0.2	0.0	0.0	1	20	16
17	20	1	0.0	0.2	0.0	PWR: (B2) AMP 214					0.2	0.2	CO: AMP 214	0.2	0.0	0.0	1	20	18
19	20	1	0.0	0.2	0.0	PWR: (B2) AMP 214	0.2	1.4					PWR: (B13) AMP 214	0.0	1.4	0.0	1	20	20
21	20	2	0.0	0.0	0.4	PWR: AMP 214			0.2	0.4			CO: AMP 214	0.4	0.0	0.0	1	20	22
23	--	--	--	--	--	--					0.2	0.2	PWR: AMP 214	0.4	0.0	0.0	2	20	24
25	20	1	--	--	--	SPARE	0.0	0.2					--	--	--	--	--	--	26
27	20	1	0.0	0.0	0.2	CO: GOWN 215B			0.2	0.3			LTG: AMP 214	0.0	0.0	0.3	1	20	28
29	20	2	0.0	0.0	0.4	PWR: AMP 214					0.2	0.0	SPARE	--	--	--	1	20	30
31	--	--	--	--	--	--	0.2	0.0					SPARE	--	--	--	1	20	32
33	20	1	--	--	--	SPARE			0.0	0.0			SPARE	--	--	--	1	20	34
35	20	1	--	--	--	SPARE					0.0	0.0	SPARE	--	--	--	1	20	36
37	20	1	--	--	--	SPARE	0.0	0.0					SPARE	--	--	--	1	20	38
39	20	1	--	--	--	SPARE			0.0	0.0			SPARE	--	--	--	1	20	40
41	20	1	--	--	--	SPARE					0.0	0.0	SPARE	--	--	--	1	20	42

TOTALS:					
CONNECTED kVA PER PHASE	5	3	4	CONNECTED TOTAL kVA =	12
CONNECTED AMPS PER PHASE	40	28	33	AVERAGE CONNECTED AMPS PER PHASE =	33

NEC DIVERSIFIED LOAD CALCULATIONS

LIGHTING & CONTINUOUS LOADS: **0.3 kVA @ 125% = 0.4 kVA**
RECEPTACLES: **3.8 kVA @ 100% = 3.8 kVA**
ALL OTHER LOADS @ 100% : **8.0 kVA**

- 100% CONNECTED LOAD PLUS 25%
- FIRST 10kVA @ 100%, REMAINDER @ 50%
- MOTOR TOTALS INCLUDED IN ALL OTHER LOADS WITH LARGEST MOTOR CALCULATED @ 125% PER NEC

DIVERSIFIED TOTAL kVA = **12**
AVERAGE AMPS PER PHASE = **34**

CRSA
649 E. South Temple
Salt Lake City, UT 84102
801.355.5915

MWL
11798 N. Lakeridge Pkwy.
Ashland, VA 23005
804-228-7473

State of Utah
Department of Administrative Services
Division of Facilities Construction & Management
4110 State Office Building
Salt Lake City, Utah 84114
Phone: (801) 538 - 3018
Fax: (801) 538 - 3267

DFCM APPROVAL STAMP

ARCHITECT-ENGINEER STAMP
No. 181563
DAVID E. WESEMANN
04-21-2014
STATE OF UTAH

Unified State Laboratory Module 2

4451 South 2700 West, Taylorsville, UT 84118

DFCM #: 13020300
Project #: B13-024

DATE:	ISSUE TYPE:
April 21, 2014	BID SET

MARK	DATE	DESCRIPTION
1	May 8, 2015	ADDENDUM #1

CHECKED BY: D. WESEMANN
DRAWN BY: DLM

PANEL SCHEDULES

EP619
VOLUME 2

C:\Users\dlm\Documents\20130362Elec Central_DLM (8432).rvt
5/7/2015 5:27:52 PM

PANEL: "3LA3"

VOLTS/PHASE/WIRE:	PANEL SIZE & TYPE:	MAIN SIZE AND TYPE:	LOCATION:	CABINET:	NOTES:
120/208V, 3 PH 4 WIRE	22" W x 6" D, BOLT-ON	225 AMPERE MAIN CB	HALL 300B	RECESSED	

ACCESSORIES: PANEL DIRECTORY, IDENTIFICATION, GROUNDING BAR **AIC RATING:** 8,842 AIC

CKT	OCP		LOAD (kVA)				PHASE LOAD							LOAD (kVA)			OCP		CKT
NO	AMP	POLE	LTG	PWR	CO	DESCRIPTION	A		B		C		DESCRIPTION	CO	PWR	LTG	POLE	AMP	NO
1	30	2	0.0	4.4	0.0	PWR: (CH6) FURNACE 315D	2.2	1.5					PWR: (CH5A) GRIND 2 315A	0.0	1.5	0.0	1	20	2
3	--	--	--	--	--	--			2.2	1.0			PWR: (CH5B) GRIND 2 315A	0.0	1.0	0.0	1	20	4
5	30	2	0.0	4.4	0.0	PWR: (CH6) FURNACE 315D					2.2	1.5	PWR: (CH5A) GRIND 1 315C	0.0	1.5	0.0	1	20	6
7	--	--	--	--	--	--	2.2	1.0					PWR: (CH5B) GRIND 1 315C	0.0	1.0	0.0	1	20	8
9	20	1	0.0	1.7	0.0	PWR: (CH11) FURNACE 315D			1.7	0.4			CO: GRIND PREP 315B	0.4	0.0	0.0	1	20	10
11	20	1	0.0	1.7	0.0	PWR: (CH11) FURNACE 315D					1.7	0.4	CO: GRIND 2 315A	0.4	0.0	0.0	1	20	12
13	20	2	0.0	3.1	0.0	PWR: (CH4) FURNACE 315D	1.6	0.4					CO: GRIND 1 315C	0.4	0.0	0.0	1	20	14
15	--	--	--	--	--	--			1.6	0.5			CO: BALANCE 315	0.5	0.0	0.0	1	20	16
17	20	2	0.0	2.1	0.0	PWR: (CH13) FURNACE 315D					1.0	0.7	PWR: (CH2-HTEX) ICPMS 314A	0.0	0.7	0.0	1	20	18
19	--	--	--	--	--	--	1.0	2.1					PWR: (CH2-CHILLER) ICPMS 314A	0.0	4.2	0.0	2	30	20
21	20	1	0.0	0.5	0.0	PWR: VENT HOOD GRIND 2 315A			0.5	2.1			--	--	--	--	--	--	22
23	30	2	0.0	5.0	0.0	PWR: (CH2) ICPMS 314A					2.5	0.2	PWR: (CH2-ASX-500) ICPMS 314A	0.0	0.2	0.0	1	20	24
25	--	--	--	--	--	--	2.5	2.9					PWR: (CH1) ICPMS 314A	0.0	5.8	0.0	2	30	26
27	20	1	0.0	1.2	0.0	PWR: (CH2-MONITOR) ICPMS 314A			1.2	2.9			--	--	--	--	--	--	28
29	20	2	0.0	2.5	0.0	PWR: (CH2-CHILLER) ICPMS 314A					1.3	0.2	CO ICPMS 314A	0.2	0.0	0.0	1	20	30
31	--	--	--	--	--	--	1.3	1.6					PWR: (CH4) ICPMS 314A	0.0	3.1	0.0	2	20	32
33	20	1	0.0	0.2	0.0	PWR: (CH2-I-AS) ICPMS 314A			0.2	1.6			--	--	--	--	--	--	34
35	20	1	0.0	0.4	0.0	PWR: CH1 ACCSRS ICPMS 314A					0.4	0.5	PWR: VENT HOOD GRIND 2 315A	0.0	0.5	0.0	1	20	36
37	20	1	0.0	0.0	0.5	CO: ICPMS 314A	0.5	0.5					PWR: VENT HOOD GRIND 1 315C	0.0	0.5	0.0	1	20	38
39	30	2	0.0	5.8	0.0	PWR: (CH1) ICPMS 314A			2.9	0.0			SPARE	--	--	--	1	20	40
41	--	--	--	--	--	--					2.9	0.5	PWR: VENT HOOD FURNACE 315D	0.0	0.5	0.0	1	20	42
43	20	1	--	--	--	SPARE	0.0	0.6					PWR: CH1 CHILLER 208V ICPMS 314A	0.0	1.3	0.0	2	20	44
45	20	1	0.0	0.5	0.0	PWR: VENT HOOD FURNACE 315D			0.5	0.6			--	--	--	--	--	--	46
47	20	1	0.0	0.5	0.0	PWR: VENT HOOD FURNACE 315D					0.5	0.2	PWR: CH1 CHILLER 120V ICPMS 314A	0.2	0.0	0.0	1	20	48
49	20	2	0.0	0.0	0.4	PWR: GRIND 2 315A	0.2	0.4					CO: ICPMS 314A	0.4	0.0	0.0	1	20	50
51	--	--	--	--	--	--			0.2	0.6			PWR: ICPMS 314A	0.0	1.3	0.0	2	20	52
53	20	2	0.0	0.0	0.4	PWR: GRIND PREP 315B					0.2	0.6	--	--	--	--	--	--	54
55	--	--	--	--	--	--	0.2	0.2					CO: ICPMS 314A	0.2	0.0	0.0	1	20	56
57	20	2	0.0	0.0	0.4	PWR: GRIND 1 315C			0.2	0.2			CO: ICPMS 314A	0.2	0.0	0.0	1	20	58
59	--	--	--	--	--	--					0.2	1.6	CO: ICPMS 314A	1.6	0.0	0.0	1	20	60
61	20	1	0.0	0.0	0.5	CO: BALANCE 315	0.5	0.0					SPARE	--	--	--	1	20	62
63	20	1	--	--	--	SPARE			0.0	0.0			SPARE	--	--	--	1	20	64
65	20	1	--	--	--	SPARE					0.0	1.6	CO: ICPMS 314A	1.6	0.0	0.0	1	20	66
67	20	1	--	--	--	SPARE	0.0	0.0					SPARE	--	--	--	1	20	68
69	20	1	--	--	--	SPARE			0.0	0.0			SPARE	--	--	--	1	20	70
71	20	1	--	--	--	SPARE					0.0	0.0	SPARE	--	--	--	1	20	72
73	20	1	--	--	--	SPARE	0.0	0.0					SPARE	--	--	--	1	20	74
75	20	1	--	--	--	SPARE			0.0	0.0			SPARE	--	--	--	1	20	76
77	20	1	--	--	--	SPARE					0.0	0.0	SPARE	--	--	--	1	20	78
79	20	1	--	--	--	SPARE	0.0	0.0					SPARE	--	--	--	1	20	80
81	20	1	--	--	--	SPARE			0.0	0.0			SPARE	--	--	--	1	20	82
83	20	1	--	--	--	SPARE					0.0	0.0	SPARE	--	--	--	1	20	84

TOTALS: CONNECTED kVA PER PHASE **23** **21** **21** CONNECTED TOTAL kVA = **65**
CONNECTED AMPS PER PHASE **194** **175** **172** AVERAGE CONNECTED AMPS PER PHASE = **180**

NEC DIVERSIFIED LOAD CALCULATIONS

LIGHTING & CONTINUOUS LOADS: **0.0 kVA @ 125% = 0.0 kVA** - 100% CONNECTED LOAD PLUS 25% DIVERSIFIED TOTAL kVA = **65**
RECEPTACLES: **8.0 kVA @ 100% = 8.0 kVA** - FIRST 10kVA @ 100%, REMAINDER @ 50% AVERAGE AMPS PER PHASE = **180**
ALL OTHER LOADS @ 100% : **56.8 kVA** - MOTOR TOTALS INCLUDED IN ALL OTHER LOADS WITH LARGEST MOTOR CALCULATED @ 125% PER NEC

PANEL: "3LA4"

VOLTS/PHASE/WIRE:	PANEL SIZE & TYPE:	MAIN SIZE AND TYPE:	LOCATION:	CABINET:	NOTES:
120/208V, 3 PH 4 WIRE	22" W x 6" D, BOLT-ON	150 AMPERE MAIN CB	HALL 300B	RECESSED	

ACCESSORIES: PANEL DIRECTORY, IDENTIFICATION, GROUNDING BAR **AIC RATING:** 8,842 AIC

CKT	OCP		LOAD (kVA)				PHASE LOAD							LOAD (kVA)			OCP		CKT
NO	AMP	POLE	LTG	PWR	CO	DESCRIPTION	A		B		C		DESCRIPTION	CO	PWR	LTG	POLE	AMP	NO
1	20	1	0.0	1.9	0.0	PWR: (FH4-1) WET CHEM 314	1.9	0.2					CO: WET CHEM 314	0.2	0.0	0.0	1	20	2
3	20	1	0.0	1.9	0.0	PWR: (FH4-ADA) WET CHEM 314			1.9	0.5			CO: WET CHEM 314	0.5	0.0	0.0	1	20	4
5	20	1	0.0	1.9	0.0	PWR: (FH4-1) WET CHEM 314					1.9	0.4	CO: WET CHEM 314	0.4	0.0	0.0	1	20	6
7	20	1	0.0	1.9	0.0	PWR: (FH6-3) WET CHEM 314	1.9	0.4					CO: WET CHEM 314	0.4	0.0	0.0	1	20	8
9	20	1	0.0	1.9	0.0	PWR: (FH4-1) WET CHEM 314			1.9	0.4			CO: WET CHEM 314	0.4	0.0	0.0	1	20	10
11	20	1	0.0	1.9	0.0	PWR: (FH4-1) WET CHEM 314					1.9	0.5	CO: WET CHEM 314	0.5	0.0	0.0	1	20	12
13	20	1	0.0	1.2	0.0	PWR: (CH12) WET CHEM 314	1.2	0.4					CO: WET CHEM 314	0.4	0.0	0.0	1	20	14
15	20	1	0.0	1.2	0.0	PWR: (CH12) WET CHEM 314			1.2	0.5			CO: WET CHEM 314	0.5	0.0	0.0	1	20	16
17	20	1	0.0	1.8	0.0	PWR: (CH14) WET CHEM 314					1.8	0.4	CO: WET CHEM 314	0.4	0.0	0.0	1	20	18
19	20	1	0.0	1.9	0.0	PWR: (FH6-1) WET CHEM 314	1.9	0.4					CO: WET CHEM 314	0.4	0.0	0.0	1	20	20
21	20	2	0.0	1.2	0.0	PWR: (CH-9) WET CHEM 314			0.6	0.4			CO: WET CHEM 314	0.4	0.0	0.0	1	20	22
23	--	--	--	--	--	--					0.6	0.2	PWR: WET CHEM 314	0.4	0.0	0.0	2	20	24
25	20	2	0.0	2.8	0.0	PWR: (CH7) WET CHEM 314	1.4	0.2					--	--	--	--	--	--	26
27	--	--	--	--	--	--			1.4	0.2			PWR: WET CHEM 314	0.4	0.0	0.0	2	20	28
29	20	1	0.7	0.0	0.0	LIGHTING WET CHEM 314					0.7	0.2	--	--	--	--	--	--	30
31	20	1	--	--	--	SPARE	0.0	0.2					PWR: WET CHEM 314	0.4	0.0	0.0	2	20	32
33	20	1	--	--	--	SPARE			0.0	0.2			--	--	--	--	--	--	34
35	20	1	--	--	--	SPARE					0.0	0.2	PWR: WET CHEM 314	0.4	0.0	0.0	2	20	36
37	20	1	--	--	--	SPARE	0.0	0.2					--	--	--	--	--	--	38
39	20	1	--	--	--	SPARE			0.0	0.0			SPARE	--	--	--	1	20	40
41	20	1	--	--	--	SPARE					0.0	0.0	SPARE	--	--	--	1	20	42
43	20	1	--	--	--	SPARE	0.0	0.0					SPARE	--	--	--	1	20	44
45	20	1	--	--	--	SPARE			0.0	0.0			SPARE	--	--	--	1	20	46
47	20	1	--	--	--	SPARE					0.0	0.0	SPARE	--	--	--	1	20	48
49	20	1	--	--	--	SPARE	0.0	0.0					SPARE	--	--	--	1	20	50
51	20	1	--	--	--	SPARE			0.0	0.0			SPARE	--	--	--	1	20	52
53	20	1	--	--	--	SPARE					0.0	0.0	SPARE	--	--	--	1	20	54
55	20	1	--	--	--	SPARE	0.0	0.0					SPARE	--	--	--	1	20	56
57	20	1	--	--	--	SPARE			0.0	0.0			SPARE	--	--	--	1	20	58
59	20	1	--	--	--	SPARE					0.0	0.0	SPARE	--	--	--	1	20	60

TOTALS: CONNECTED kVA PER PHASE **10** **9** **9** CONNECTED TOTAL kVA = **28**
CONNECTED AMPS PER PHASE **85** **78** **73** AVERAGE CONNECTED AMPS PER PHASE = **78**

NEC DIVERSIFIED LOAD CALCULATIONS

LIGHTING & CONTINUOUS LOADS: **0.7 kVA @ 125% = 0.8 kVA** - 100% CONNECTED LOAD PLUS 25% DIVERSIFIED TOTAL kVA = **28**
RECEPTACLES: **5.8 kVA @ 100% = 5.8 kVA** - FIRST 10kVA @ 100%, REMAINDER @ 50% AVERAGE AMPS PER PHASE = **78**
ALL OTHER LOADS @ 100% : **21.7 kVA** - MOTOR TOTALS INCLUDED IN ALL OTHER LOADS WITH LARGEST MOTOR CALCULATED @ 125% PER NEC

PANEL: "3LA5"

VOLTS/PHASE/WIRE:	PANEL SIZE & TYPE:	MAIN SIZE AND TYPE:	LOCATION:	CABINET:	NOTES:
120/208V, 3 PH 4 WIRE	22" W x 6" D, BOLT-ON	150 AMPERE MAIN CB	HALL 300B	RECESSED	

ACCESSORIES: PANEL DIRECTORY, IDENTIFICATION, GROUNDING BAR **AIC RATING:** 8,842 AIC

CKT	OCP		LOAD (kVA)				PHASE LOAD							LOAD (kVA)			OCP		CKT
NO	AMP	POLE	LTG	PWR	CO	DESCRIPTION	A		B		C		DESCRIPTION	CO	PWR	LTG	POLE	AMP	NO
1	20	1	0.0	1.9	0.0	PWR: (FH6-ADA) PESTICIDE...	1.9	0.0					SPARE	--	--	--	1	20	2
3	20	1	0.0	1.2	0.0	PWR: (PC10) PESTICIDE RESIDUE...			1.2	1.9			PWR: (FH6-1) VOLATILE EXTRACT 303A	0.0	1.9	0.0	1	20	4
5	20	1	0.0	1.9	0.0	PWR: (PC9) PESTICIDE RESIDUE...					1.9	0.5	CO: VOLATILE EXTRACT 303A	0.5	0.0	0.0	1	20	6
7	20	1	0.0	1.9	0.0	PWR: (FH8-1) PESTICIDE RESIDUE...	1.9	0.2					PWR: VOLATILE EXTRACT 303A	0.4	0.0	0.0	2	20	8
9	20	1	0.0	0.0	0.5	CO: PESTICIDE RESIDUE...			0.5	0.2			--	--	--	--	--	--	10
11	20	1	0.0	0.0	0.5	CO: PESTICIDE RESIDUE...					0.5	0.2	PWR: VOLATILE INST. LAB 303	0.4	0.0	0.0	2	20	12
13	20	1	0.0	0.0	0.4	CO: PESTICIDE RESIDUE...	0.4	0.2					--	--	--	--	--	--	14
15	20	1	0.0	0.0	0.4	CO: PESTICIDE RESIDUE...			0.4	0.2			PWR: VOLATILE INST. LAB 303	0.2	0.0	0.0	1	20	16
17	20	1	0.0	0.0	0.4	CO: PESTICIDE RESIDUE...					0.4	0.2	LTG: PESTICIDE RESIDUE EXTRACTI...	0.0	0.0	0.2	1	20	18
19	20	1	0.0	0.0	0.4	CO: PESTICIDE RESIDUE...	0.4	0.0					SPARE	--	--	--	1	20	20
21	20	1	0.0	0.5	0.0	PWR: HOOD PESTICIDE RESIDUE...			0.5	0.0			SPARE	--	--	--	1	20	22
23	20	2	0.0	0.0	0.4	PWR: PESTICIDE RESIDUE...					0.2	0.0	SPARE	--	--	--	1	20	24
25	--	--	--	--	--	--	0.2	0.0					SPARE	--	--	--	1	20	26
27	20	1	--	--	--	SPARE			0.0	0.0			SPARE	--	--	--	1	20	28
29	20	1	--	--	--	SPARE					0.0	0.0	SPARE	--	--	--	1	20	30
31	20	1	--	--	--	SPARE	0.0	0.0					SPARE	--	--	--	1	20	32
33	20	1	--	--	--	SPARE			0.0	0.0			SPARE	--	--	--	1	20	34
35	20	1	--	--	--	SPARE					0.0	0.0	SPARE	--	--	--	1	20	36
37	20	1	--	--	--	SPARE	0.0	0.0					SPARE	--	--	--	1	20	38
39	20	1	--	--	--	SPARE			0.0	0.0			SPARE	--	--	--	1	20	40
41	20	1	--	--	--	SPARE					0.0	0.0	SPARE	--	--	--	1	20	42

TOTALS: CONNECTED kVA PER PHASE **5** **5** **4** CONNECTED TOTAL kVA = **14**
CONNECTED AMPS PER PHASE **44** **42** **33** AVERAGE CONNECTED AMPS PER PHASE = **39**

NEC DIVERSIFIED LOAD CALCULATIONS

LIGHTING & CONTINUOUS LOADS: **0.2 kVA @ 125% = 0.2 kVA** - 100% CONNECTED LOAD PLUS 25% DIVERSIFIED TOTAL kVA = **14**
RECEPTACLES: **4.3 kVA @ 100% = 4.3 kVA** - FIRST 10kVA @ 100%, REMAINDER @ 50% AVERAGE AMPS PER PHASE = **39**
ALL OTHER LOADS @ 100% : **9.4 kVA** - MOTOR TOTALS INCLUDED IN ALL OTHER LOADS WITH LARGEST MOTOR CALCULATED @ 125% PER NEC

PANEL: "3LB1"

VOLTS/PHASE/WIRE:	PANEL SIZE & TYPE:	MAIN SIZE AND TYPE:	LOCATION:	CABINET:	NOTES:
120/208V, 3 PH 4 WIRE	22" W x 6" D, BOLT-ON	225 AMPERE MAIN LUG	ELECTRICAL 300F	SURFACE	

ACCESSORIES: PANEL DIRECTORY, IDENTIFICATION, GROUNDING BAR **AIC RATING:** 13,733 AIC

CKT	OCP		LOAD (kVA)				PHASE LOAD							LOAD (kVA)			OCP		CKT
NO	AMP	POLE	LTG	PWR	CO	DESCRIPTION	A		B		C		DESCRIPTION	CO	PWR	LTG	POLE	AMP	NO
1	20	1	0.0	0.7	0.0	CO: HALL 300B	0.7	0.7					CO: ROOM 300B, 300C	0.7	0.0	0.0	1	20	2
3	20	1	0.0	0.0	0.7	CO: CHEM OFFICE 304			0.7	0.5			CO: MANAGER 304A	0.5	0.0	0.0	1	20	4
5	20	1	0.0	0.5	0.0	PWR: FLR BOXES CONFERENCE...					0.5	1.5	PWR: PROJ AND SCRN 306	1.0	0.5	0.0	1	20	6
7	20	1	0.1	0.0	0.5	CO: CONFERENCE 306	0.7	0.4					CO: WOMEN 307	0.4	0.0	0.0	1	20	8
9	20	1	0.0	0.0	0.4	CO: MEN 308			0.4	1.1			CO: JAN 300E	1.1	0.0	0.0	1	20	10
11	20	1	0.0	0.0	0.7	CO: MANAGER 309A					0.7	0.4	CO: ROOM 309, 309B	0.4	0.0	0.0	1	20	12
13	20	1	0.0	0.0	1.0	PWR: PROJ AND SCRN 310B	1.0	0.5					PWR: CONF RM 310B	0.0	0.5	0.0	1	20	14
15	20	1	0.0	1.5	0.0	PWR: PRINTER RECORDS 310A			1.5	0.5			CO: CONF RM 310B	0.5	0.0	0.0	1	20	16
17	20	1	0.0	0.0	0.9	CO: AG & FOOD ADMIN & SUPPOR...					0.9	0.7	CO: AG & FOOD ADMIN & SUPPORT 310	0.7	0.0	0.0	1	20	18
19	20	1	0.0	0.0	0.7	CO: AG & FOOD ADMIN & SUPPOR...	0.7	0.8					PWR: FURN BACT OFFICE 309	0.0	0.8	0.0	3	20	20
21	20	1	0.0	0.0	0.7	CO: ROOM 307, 308			0.7	0.0			--	--	--	--	--	--	22
23	20	1	0.0	0.0	0.9	CO: ROOM 310D, 310C					0.9	0.0	--	--	--	--	--	--	24
25	20	1	--	--	--	SPARE	0.0	0.3					PWR: FURN BACT OFFICE 309	0.0	0.3	0.0	1	20	26
27	20	1	--	--	--	SPARE			0.0	0.8			PWR: A/V CABINET CONF RM 310B	0.0	0.8	0.0	1	20	28
29	20	1	--	--	--	SPARE					0.0	0.8	PWR: A/V CABINET CONFERENCE 306	0.0	0.8	0.0	1	20	30
31	20	1	--	--	--	SPARE	0.0	0.0					SPARE	--	--	--	1	20	32
33	20	1	--	--	--	SPARE			0.0	0.0			SPARE	--	--	--	1	20	34
35	20	1	--	--	--	SPARE					0.0	0.0	SPARE	--	--	--	1	20	36
37	20	1	--	--	--	SPARE	0.0	0.0					SPARE	--	--	--	1	20	38
39	20	1	--	--	--	SPARE			0.0	0.0			SPARE	--	--	--	1	20	40
41	20	1	--	--	--	SPARE					0.0	0.0	SPARE	--	--	--	1	20	42

TOTALS: CONNECTED kVA PER PHASE **6** **6** **6** CONNECTED TOTAL kVA = **18**
CONNECTED AMPS PER PHASE **48** **53** **54** AVERAGE CONNECTED AMPS PER PHASE = **51**

NEC DIVERSIFIED LOAD CALCULATIONS

LIGHTING & CONTINUOUS LOADS: **0.1 kVA @ 125% = 0.2 kVA** - 100% CONNECTED LOAD PLUS 25% DIVERSIFIED TOTAL kVA = **17**
RECEPTACLES: **11.9 kVA @ 92% = 11.0 kVA** - FIRST 10kVA @ 100%, REMAINDER @ 50% AVERAGE AMPS PER PHASE = **49**
ALL OTHER LOADS @ 100% : **6.4 kVA** - MOTOR TOTALS INCLUDED IN ALL OTHER LOADS WITH LARGEST MOTOR CALCULATED @ 125% PER NEC

CRSA
649 E. South Temple
Salt Lake City, UT 84102
801.355.5915

MWL
11798 N. Lakeridge Pkwy.
Ashland, VA 23005
804-228-7473

State of Utah
Department of Administrative Services
Division of Facilities Construction & Management
DFCM
4110 State Office Building
Salt Lake City, Utah 84114
Phone: (801) 538 - 3018
Fax: (801) 538 - 3267

DFCM APPROVAL STAMP

LICENSED PROFESSIONAL ENGINEER
No. 181563
DAVID E. WESEMANN
04-21-2014
STATE OF UTAH

ARCHITECT-ENGINEER STAMP

Unified State Laboratory Module 2

4451 South 2700 West, Taylorsville, UT 84118

DFCM #: 13020300

Project #: B13-024

DATE:	ISSUE TYPE:
April 21, 2014	BID SET

MARK	DATE	DESCRIPTION
1	May 8, 2015	ADDENDUM #1

CHECKED BY: D. WESEMANN
DRAWN BY: DLM

PANEL SCHEDULES

EP626

VOLUME 2

C:\Users\dlm\Documents\2013052EElec-Central_DLM (64-32).rvt
5/7/2015 5:27:55 PM

PANEL: "LMPC2"

VOLTS/PHASE/WIRE:	PANEL SIZE & TYPE:	MAIN SIZE AND TYPE:	LOCATION:	CABINET:	NOTES:
120/208V, 3 PH 4 WIRE	22" W x 6" D, BOLT-ON	400 AMPERE MAIN CB	PENTHOUSE 401	SURFACE	

ACCESSORIES: PANEL DIRECTORY, IDENTIFICATION, GROUNDING BAR **AIC RATING:** 3,317 AIC

CKT	OCP		LOAD (kVA)				PHASE LOAD							LOAD (kVA)			OCP		CKT
NO	AMP	POLE	LTG	PWR	CO	DESCRIPTION	A		B		C		DESCRIPTION	CO	PWR	LTG	POLE	AMP	NO
1	20	1	0.0	1.9	0.0	PWR: AH-1 ACCESORIES PNTHS 401	1.9	1.9					PWR: AH-2 ACCESORIES PNTHS 401	0.0	1.9	0.0	1	20	2
3	20	1	0.0	1.9	0.0	PWR: AH-3 ACCESORIES PNTHS 401			1.9	1.9			PWR: AH-4 ACCESORIES PNTHS 401	0.0	1.9	0.0	1	20	4
5	20	1	0.1	0.0	0.2	LTG/CO :ELEV. EQUIP. ROOM 403					0.2	0.2	CO/LTG: ELEVATOR PIT	0.2	0.0	0.1	1	20	6
7	20	1	0.1	0.0	0.2	LTG/CO: ELEV EQUIP ROOM 402	0.2	0.0					PWR: FSD	0.0	0.0	0.0	1	20	8
9	20	1	0.0	0.0	0.0	PWR: FSD			0.0	1.9			PWR: MECH CTRL POWER	0.0	1.9	0.0	1	20	10
11	20	1	0.0	0.0	0.0	PWR: FSD					0.0	1.9	PWR: MECH CTRL POWER	0.0	1.9	0.0	1	20	12
13	20	1	0.0	1.9	0.0	PWR: MECH CTRL POWER	1.9	1.9					PWR: MECH CTRL POWER	0.0	1.9	0.0	1	20	14
15	20	1	0.0	1.9	0.0	PWR: MECH CTRL POWER			1.9	0.0			PWR: ATC PENTHOUSE 401	0.0	0.0	0.0	1	20	16
17	20	1	0.0	1.9	0.0	PWR: MECH CTRL POWER					1.9	0.0	PWR: ATC PENTHOUSE 401	0.0	0.0	0.0	1	20	18
19	20	1	0.0	0.0	0.0	PWR: ATC PENTHOUSE 401	0.0	0.0					PWR: ATC PENTHOUSE 401	0.0	0.0	0.0	1	20	20
21	20	1	0.0	0.0	0.0	PWR: ATC PENTHOUSE 401			0.0	0.0			PWR: ATC PENTHOUSE 401	0.0	0.0	0.0	1	20	22
23	20	1	0.0	0.0	0.0	PWR: ATC PENTHOUSE 401					0.0	0.0	PWR: ATC PENTHOUSE 401	0.0	0.0	0.0	1	20	24
25	60	3	0.0	16.2	0.0	PWR: (ME7-C) ROOFTOP	5.4	0.0					PWR: ATC PENTHOUSE 401	0.0	0.0	0.0	1	20	26
27	--	--	--	--	--	--			5.4	5.4			PWR: ME7d	0.0	16.2	0.0	3	60	28
29	--	--	--	--	--	--					5.4	5.4	--	--	--	--	--	--	30
31	15	3	0.0	4.1	0.0	PWR: (ME8-C) ROOFTOP	1.4	5.4					--	--	--	--	--	--	32
33	--	--	--	--	--	--			1.4	1.4			PWR: ME8d	0.0	4.1	0.0	3	15	34
35	--	--	--	--	--	--					1.4	1.4	--	--	--	--	--	--	36
37	50	3	0.0	13.5	0.0	PWR: ME9c	4.5	1.4					--	--	--	--	--	--	38
39	--	--	--	--	--	--			4.5	4.5			PWR: ME9d	0.0	13.5	0.0	3	50	40
41	--	--	--	--	--	--					4.5	4.5	--	--	--	--	--	--	42
43	20	3	0.0	5.4	0.0	PWR: FRZR-C	1.8	4.5					--	--	--	--	--	--	44
45	--	--	--	--	--	--			1.8	1.2			PWR: (EC-1) PENTHOUSE 401	0.0	1.2	0.0	1	20	46
47	--	--	--	--	--	--					1.8	1.2	PWR: (EC-2) PENTHOUSE 401	0.0	1.2	0.0	1	20	48
49	20	3	0.0	5.4	0.0	PWR: FRZR-D	1.8	0.0					SPARE	--	--	--	1	20	50
51	--	--	--	--	--	--			1.8	0.0			SPARE	--	--	--	1	20	52
53	--	--	--	--	--	--					1.8	0.0	SPARE	--	--	--	1	20	54
55	20	1	--	--	--	SPARE	0.0	0.0					SPARE	--	--	--	1	20	56
57	20	1	--	--	--	SPARE			0.0	0.0			SPARE	--	--	--	1	20	58
59	20	1	--	--	--	SPARE					0.0	0.0	SPARE	--	--	--	1	20	60
61	20	1	--	--	--	SPARE	0.0	0.0					SPARE	--	--	--	1	20	62
63	20	1	--	--	--	SPARE			0.0	0.0			SPARE	--	--	--	1	20	64
65	20	1	--	--	--	SPARE					0.0	0.0	SPARE	--	--	--	1	20	66
67	20	1	--	--	--	SPARE	0.0	0.0					SPARE	--	--	--	1	20	68
69	20	1	--	--	--	SPARE			0.0	0.0			SPARE	--	--	--	1	20	70
71	20	1	--	--	--	SPARE					0.0	0.0	SPARE	--	--	--	1	20	72
73	20	1	--	--	--	SPARE	0.0	0.0					SPARE	--	--	--	1	20	74
75	20	1	--	--	--	SPARE			0.0	0.0			SPARE	--	--	--	1	20	76
77	20	1	--	--	--	SPARE					0.0	0.0	SPARE	--	--	--	1	20	78
79	20	1	--	--	--	SPARE	0.0	0.0					SPARE	--	--	--	1	20	80
81	20	1	--	--	--	SPARE			0.0	0.0			SPARE	--	--	--	1	20	82
83	20	1	--	--	--	SPARE					0.0	0.0	SPARE	--	--	--	1	20	84
TOTALS:						CONNECTED kVA PER PHASE	**34**		**35**		**32**		CONNECTED TOTAL kVA = **101**						
						CONNECTED AMPS PER PHASE	**286**		**295**		**263**		AVERAGE CONNECTED AMPS PER PHASE = **279**						

NEC DIVERSIFIED LOAD CALCULATIONS

LIGHTING & CONTINUOUS LOADS: **0.2 kVA @ 125% = 0.2 kVA** - 100% CONNECTED LOAD PLUS 25%
RECEPTACLES: **0.5 kVA @ 100% = 0.5 kVA** - FIRST 10kVA @ 100%, REMAINDER @ 50%
ALL OTHER LOADS @ 100% : **100.2 kVA** - MOTOR TOTALS INCLUDED IN ALL OTHER LOADS WITH LARGEST MOTOR CALCULATED @ 125% PER NEC

DIVERSIFIED TOTAL kVA = **101**
AVERAGE AMPS PER PHASE = **280**

EXISTING PANEL: "LM1"

VOLTS/PHASE/WIRE:	PANEL SIZE & TYPE:	MAIN SIZE AND TYPE:	LOCATION:	CABINET:	NOTES:
120/208V, 3 PH 4 WIRE	22" W x 6" D, BOLT-ON	175 AMPERE MAIN CB	CHILLER ROOM 100TA	EXISTING 1MCC	

ACCESSORIES: PANEL DIRECTORY, IDENTIFICATION, GROUNDING BAR **AIC RATING:** 3,266 AIC

CKT	OCP		LOAD (kVA)				PHASE LOAD							LOAD (kVA)			OCP		CKT
NO	AMP	POLE	LTG	PWR	CO	DESCRIPTION	A		B		C		DESCRIPTION	CO	PWR	LTG	POLE	AMP	NO
1	20	1	--	--	--	CO: CHILLER ROOM (EX)	0.4	1.0					PWR: RO SYSTEM (EX)	--	--	--	1	20	2
3	20	1	--	--	--	CO: CHILLER ROOM (EX)			0.4	1.6			PWR: CT-1 HEAT TRACE (EX)	--	--	--	2	20	4
5	20	1	--	--	--	CO: EXTERIOR (EX)					0.4	1.6	--	--	--	--	--	--	6
7	20	1	--	--	--	CO: BOILER ROOM (EX)	0.2	1.6					PWR: CT-2 HEAT TRACE (EX)	--	--	--	2	20	8
9	20	1	--	--	--	CO: BOILER ROOM (EX)			0.4	1.6			--	--	--	--	--	--	10
11	20	1	--	--	--	PWR: WS-1 (EX)					1.0	1.2	PWR: UH-1 (EX)	--	--	--	1	20	12
13	20	1	--	--	--	PWR: WS-2 (EX)	1.0	1.2					PWR: UH-1 (EX)	--	--	--	1	20	14
15	20	1	--	--	--	PWR: CT-1 CONTROLS (EX)			1.0	1.2			PWR: UH-1 (EX)	--	--	--	1	20	16
17	20	1	--	--	--	PWR: CT-2 CONTROLS (EX)					1.0	1.2	PWR: UH-1 (EX)	--	--	--	1	20	18
19	20	1	--	--	--	SPARE (EX)	0.0	1.9					PWR: CT-1b AUXILIARY CIRCUIT	0.0	1.9	0.0	1	20	20
21	20	1	--	--	--	SPARE (EX)			0.0	1.9			PWR: CT-2b AUXILIARY CIRCUIT	0.0	1.9	0.0	1	20	22
23	20	1	--	--	--	SPARE (EX)					0.0	0.4	PWR: CT-1a HEAT TRACE (NOTE 1)	0.0	0.4	0.0	1	20	24
25	20	1	--	--	--	SPARE (EX)	0.0	0.2					PWR: CT-2a HEAT TRACE (NOTE 1)	0.0	0.2	0.0	1	20	26
27	20	1	--	--	--	SPARE (EX)			0.0	0.0			SPARE (EX)	--	--	--	1	20	28
29	20	1	--	--	--	SPARE (EX)					0.0	0.0	SPARE (EX)	--	--	--	1	20	30
31	20	1	--	--	--	SPARE (EX)	0.0	0.0					SPARE (EX)	--	--	--	1	20	32
33	20	1	--	--	--	SPARE (EX)			0.0	0.0			SPARE (EX)	--	--	--	1	20	34
35	20	1	--	--	--	SPARE (EX)					0.0	0.0	SPARE (EX)	--	--	--	1	20	36
37	20	1	--	--	--	SPARE (EX)	0.0	0.0					SPARE (EX)	--	--	--	1	20	38
39	20	1	--	--	--	SPARE (EX)			0.0	0.0			SPARE (EX)	--	--	--	1	20	40
41	20	1	--	--	--	SPARE (EX)					0.0	0.0	SPARE (EX)	--	--	--	1	20	42
TOTALS:						CONNECTED kVA PER PHASE	**8**		**8**		**7**		CONNECTED TOTAL kVA = **22**						
						CONNECTED AMPS PER PHASE	**64**		**69**		**57**		AVERAGE CONNECTED AMPS PER PHASE = **62**						

NEC DIVERSIFIED LOAD CALCULATIONS

LIGHTING & CONTINUOUS LOADS: - 100% CONNECTED LOAD PLUS 25%
RECEPTACLES: - FIRST 10kVA @ 100%, REMAINDER @ 50%
ALL OTHER LOADS @ 100% : **4.5 kVA** - MOTOR TOTALS INCLUDED IN ALL OTHER LOADS WITH LARGEST MOTOR CALCULATED @ 125% PER NEC

DIVERSIFIED TOTAL kVA = **22**
AVERAGE AMPS PER PHASE = **62**

Notes:

1. 30 mA GFCI CIRCUIT BREAKER.

CRSA
649 E. South Temple
Salt Lake City, UT 84102
801.355.5915

MWL
11798 N. Lakeridge Pkwy.
Ashland, VA 23005
804-228-7473

State of Utah
Department of Administrative Services
Division of Facilities Construction & Management
4110 State Office Building
Salt Lake City, Utah 84114
Phone: (801) 538 - 3018
Fax: (801) 538 - 3267

DFCM APPROVAL STAMP

LICENSED PROFESSIONAL ENGINEER
No. 181563
DAVID E. WESEMANN
04-21-2014
STATE OF UTAH

ARCHITECT-ENGINEER STAMP

Unified State Laboratory Module 2

4451 South 2700 West, Taylorsville, UT 84118

DFCM #: 13020300

Project #: B13-024

DATE:	ISSUE TYPE:
April 21, 2014	BID SET

MARK	DATE	DESCRIPTION
1	May 8, 2015	ADDENDUM #1

CHECKED BY	D. WESEMANN
DRAWN BY	DLM

PANEL SCHEDULES

EP629

VOLUME 2

C:\Users\dlm\Documents\20130326Elec-Central_DLM (8432).rvt
5/7/2015 5:27:57 PM

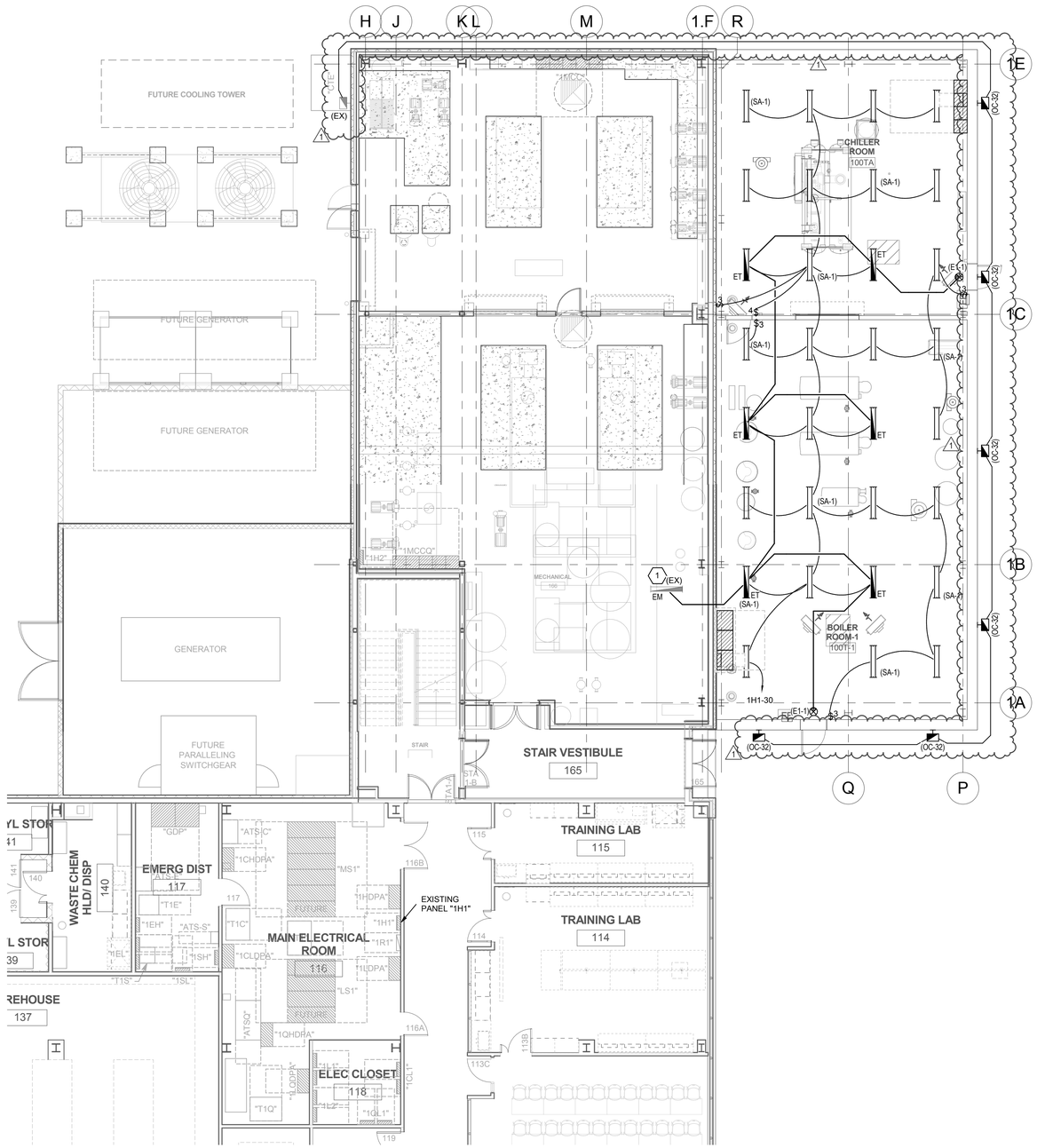

A2 FIRST LEVEL LIGHTING PLAN - AREA D

SCALE: 1/8" = 1'-0"

GENERAL SHEET NOTES

1. PROVIDE UNSWITCHED PORTION OF CIRCUIT TO ALL EXIT SIGNS. ALL OTHER EMERGENCY LIGHTS SHALL BE SWITCHED THROUGH EMERGENCY RELAYS AS INDICATED.
2. COORDINATE ALL LIGHTING IN MEHANICAL, ELECTRICAL AND TECH ROOMS WITH EQUIPMENT TO AVOID DUCTS, PIPES, ETC.

SHEET KEYNOTES

1. CONNECT NEW EMERGENCY LIGHTING CIRCUIT TO EXISTING MECHANICAL ROOM EMERGENCY LIGHTING CIRCUIT 1EH-2.

KEY PLAN

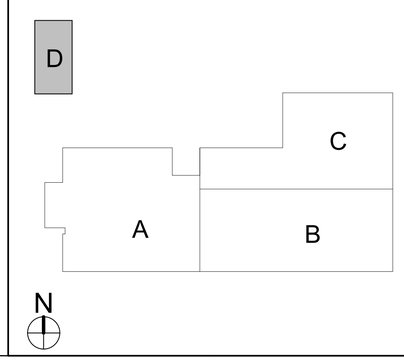

CRSA
649 E. South Temple
Salt Lake City, UT 84102
801.355.5915

MWL
11798 N. Lakeridge Pkwy.
Ashland, VA 23005
804-228-7473

State of Utah
Department of Administrative Services
Division of Facilities Construction & Management
4110 State Office Building
Salt Lake City, Utah 84114
Phone: (801) 538 - 3018
Fax: (801) 538 - 3267

DFCM APPROVAL STAMP

LICENSED PROFESSIONAL ENGINEER
No. 181563
DAVID E. WESEMANN
04-21-2014
STATE OF UTAH

ARCHITECT-ENGINEER STAMP

Unified State Laboratory Module 2

4451 South 2700 West, Taylorsville, UT 84118

DFCM #:	13020300
Project #:	B13-024

DATE:	ISSUE TYPE:
April 21, 2014	BID SET

MARK	DATE	DESCRIPTION
1	May 8, 2015	ADDENDUM #1

CHECKED BY	D. WESEMANN
DRAWN BY	DLM

FIRST LEVEL LIGHTING PLAN - AREA D

EL101d

VOLUME 2

C:\Users\dlm\Documents\20130326Elec Central_DLM (8432).rvt
5/7/2015 5:24:02 PM

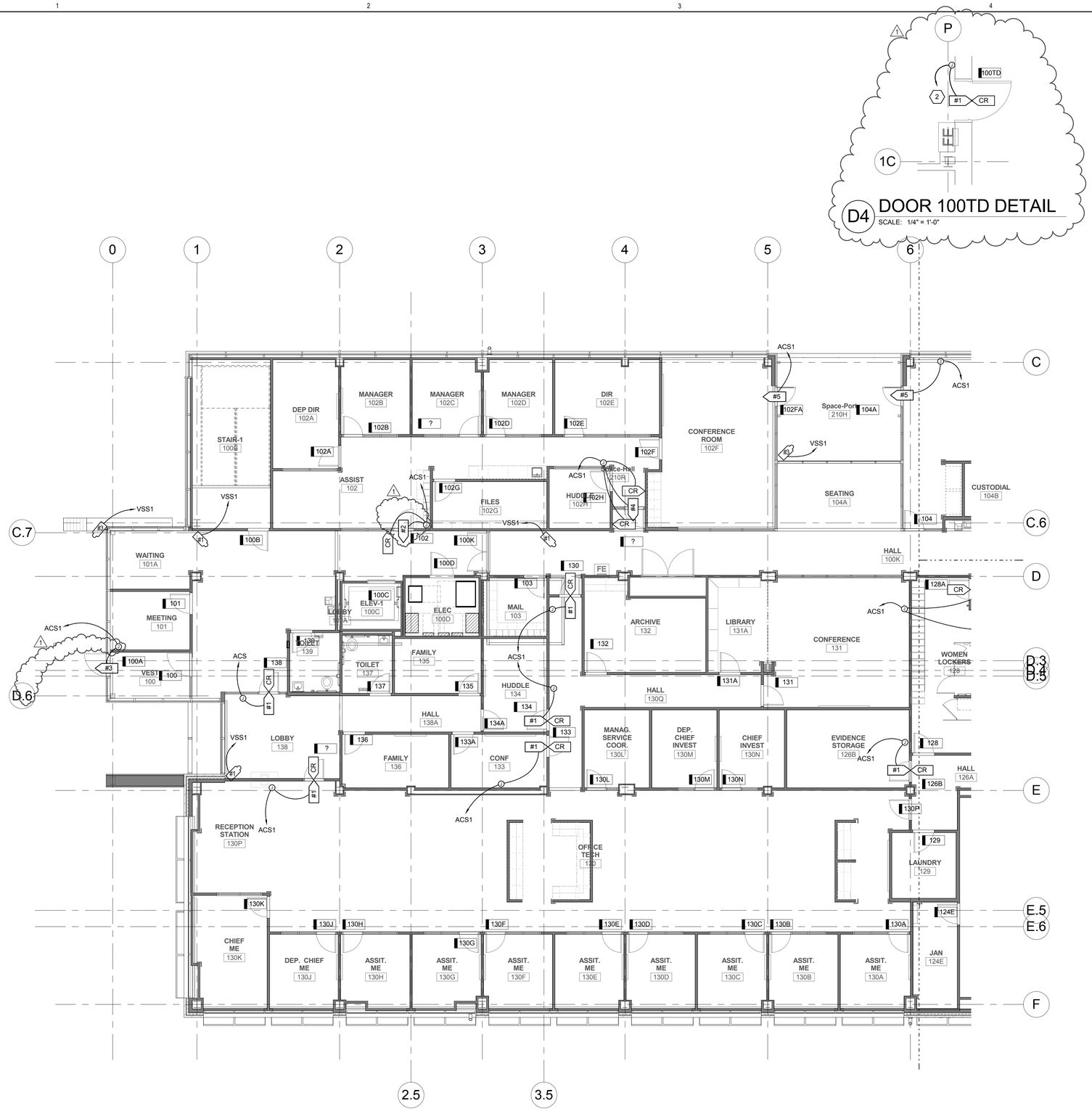

A1 FIRST LEVEL AUXILIARY PLAN - AREA A
SCALE: 1/8" = 1'-0"

GENERAL SHEET NOTES

1 COORDINATE EXACT JUNCTION BOX LOCATIONS SO THAT THEY ARE EASILY ACCESSIBLE AND ARE NOT BEHIND DOORS, FURNITURE, LOWERED PROJECTION SCREENS, ETC.

SHEET KEYNOTES

1 PROVIDE CARD READER IN ELEVATOR CAB FOR RESTRICTED FLOOR SELECTION. COORDINATE WITH ELEVATOR INSTALLER FOR TRAVELER CABLE REQUIREMENTS.

2 DOOR 100TD IS A NEW DOOR IN THE ADDITION TO THE EXISTING UNIFIED LAB MOD 1 BUILDING. REFER TO EP101D FOR LOCATION OF DOOR. THE ACCESS CONTROL COMPONENTS (CR AND HARDWARE) SHALL BE CONNECTED AND ADDED TO THE EXISTING ACCESS CONTROL SYSTEM IN THE EXISTING BUILDING.

KEY PLAN

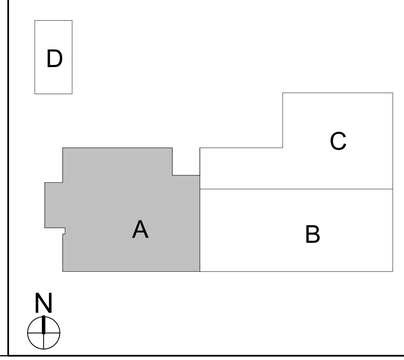

CRSA
649 E. South Temple
Salt Lake City, UT 84102
801.355.5915

MWL
11798 N. Lakeridge Pkwy.
Ashland, VA 23005
804-228-7473

State of Utah
Department of Administrative Services
Division of Facilities Construction & Management
4110 State Office Building
Salt Lake City, Utah 84114
Phone: (801) 538 - 3018
Fax: (801) 538 - 3267

DFCM APPROVAL STAMP

LICENSED PROFESSIONAL ENGINEER
No. 181563
DAVID E. WESEMANN
04-21-2014
STATE OF UTAH

ARCHITECT-ENGINEER STAMP

Unified State Laboratory Module 2

4451 South 2700 West, Taylorsville, UT 84118

DFCM #:	13020300
Project #:	B13-024

DATE:	ISSUE TYPE:
April 21, 2014	BID SET

MARK	DATE	DESCRIPTION
1	May 8, 2015	ADDENDUM #1

CHECKED BY	D. WESEMANN
DRAWN BY	DLM

FIRST LEVEL AUXILIARY PLAN - AREA A

EY101a

VOLUME 2

C:\Users\dlm\Documents\20130326Elec-Central_DLM (8432).rvt
5/7/2015 5:28:46 PM

GENERAL SHEET NOTES

1 COORDINATE EXACT JUNCTION BOX LOCATIONS SO THAT THEY ARE EASILY ACCESSIBLE AND ARE NOT BEHIND DOORS, FURNITURE, LOWERED PROJECTION SCREENS, ETC.

SHEET KEYNOTES

KEY PLAN

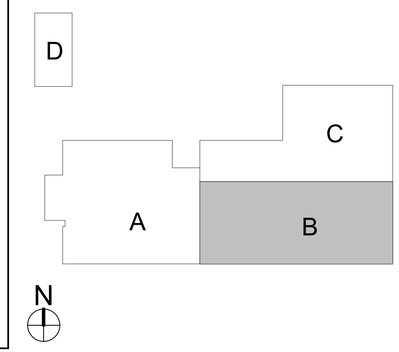

CRSA
649 E. South Temple
Salt Lake City, UT 84102
801.355.5915

MWL
11798 N. Lakeridge Pkwy.
Ashland, VA 23005
804-228-7473

State of Utah
Department of Administrative Services
Division of Facilities Construction & Management
4110 State Office Building
Salt Lake City, Utah 84114
Phone: (801) 538 - 3018
Fax: (801) 538 - 3267

DFCM APPROVAL STAMP

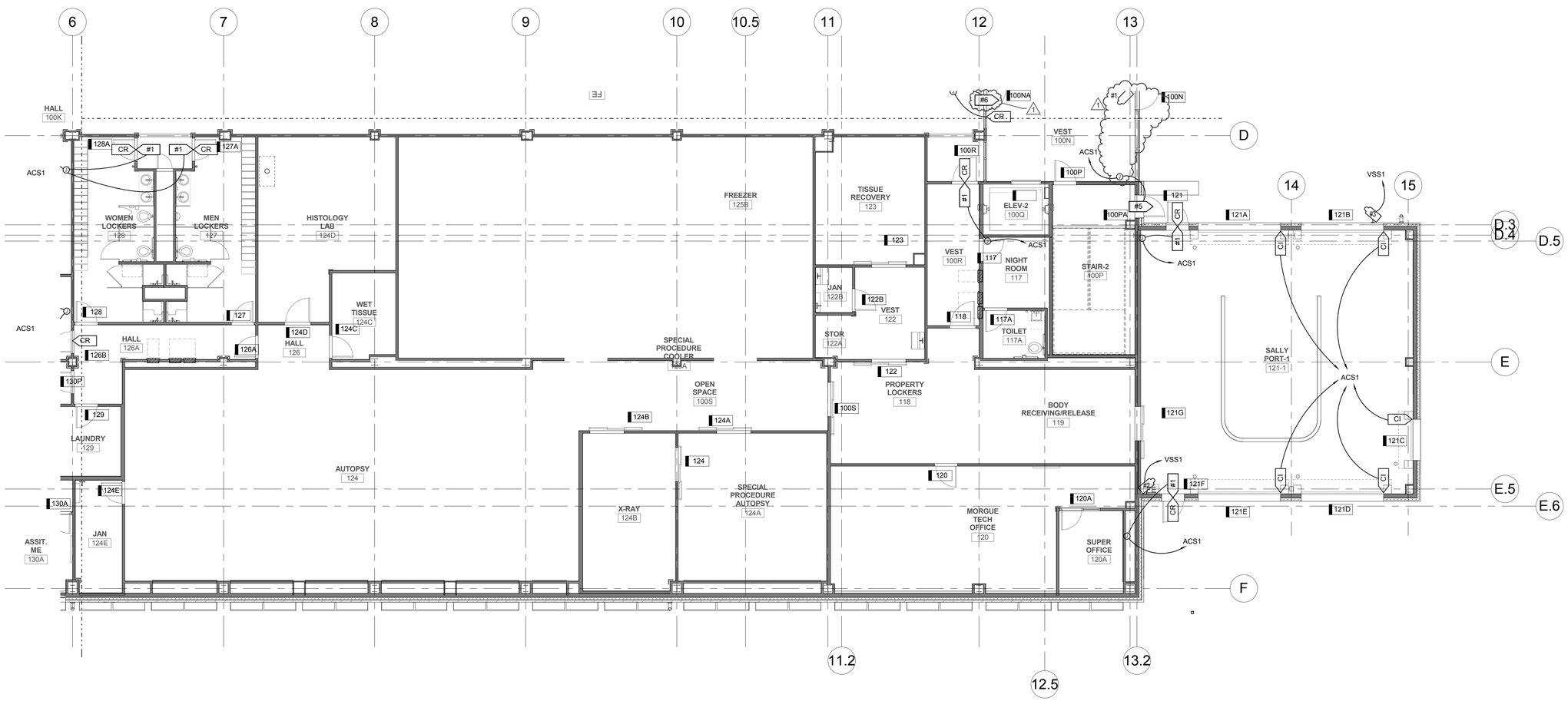

A1 FIRST LEVEL AUXILIARY PLAN - AREA B

SCALE: 1/8" = 1'-0"

ARCHITECT-ENGINEER STAMP

No. 181563
DAVID E. WESEMANN
04-21-2014
STATE OF UTAH
LICENSED PROFESSIONAL ENGINEER

Unified State Laboratory Module 2

4451 South 2700 West, Taylorsville, UT 84118

DFCM #:	13020300
Project #:	B13-024
DATE:	ISSUE TYPE:
April 21, 2014	BID SET

MARK	DATE	DESCRIPTION
1	May 8, 2015	ADDENDUM #1

CHECKED BY	D. WESEMANN
DRAWN BY	DLM

FIRST LEVEL AUXILIARY PLAN - AREA B

EY101b

VOLUME 2

C:\Users\dlm\Documents\2013\3362\Esc Central_DLM (84432).rvt
5/7/2015 5:28:53 PM

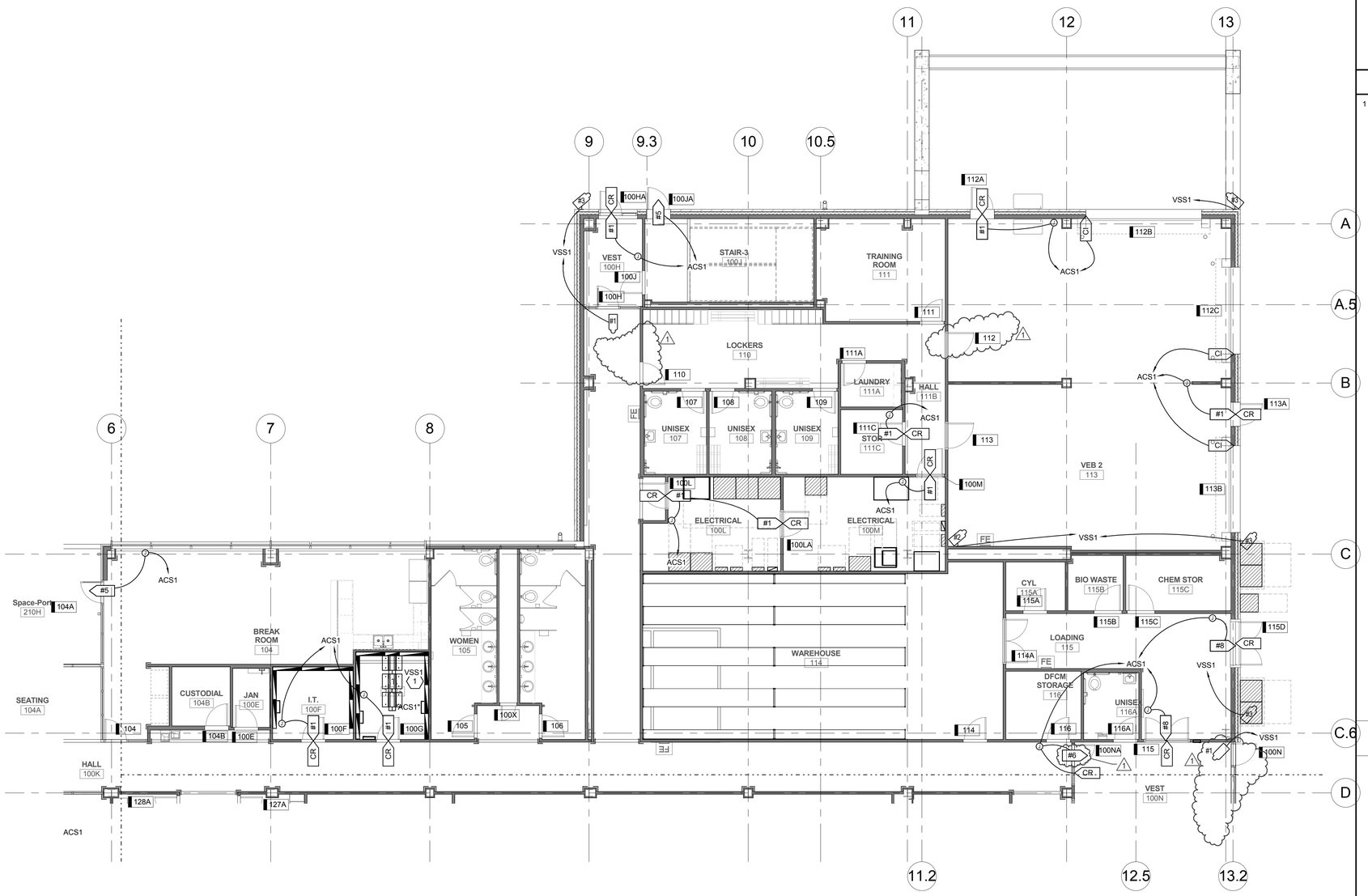

A1 FIRST LEVEL AUXILIARY PLAN - AREA C

SCALE: 1/8" = 1'-0"

GENERAL SHEET NOTES

1 COORDINATE EXACT JUNCTION BOX LOCATIONS SO THAT THEY ARE EASILY ACCESSIBLE AND ARE NOT BEHIND DOORS, FURNITURE, LOWERED PROJECTION SCREENS, ETC.

SHEET KEYNOTES

1 VIDEO SURVEILLANCE CAMERA TERMINATIONS SHALL BE MADE TO CONNECTIVITY HARDWARE AND SWITCHES INSTALLED IN SPARE SPACE OF LAN DATA RACKS.

KEY PLAN

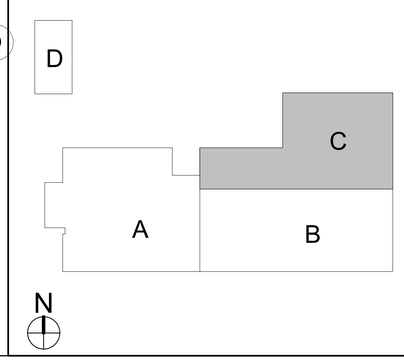

CRSA

649 E. South Temple
Salt Lake City, UT 84102
801.355.5915

MWL

11798 N. Lakeridge Pkwy.
Ashland, VA 23005
804-228-7473

State of Utah
Department of Administrative Services
Division of Facilities Construction & Management
DFCM
4110 State Office Building
Salt Lake City, Utah 84114
Phone: (801) 538 - 3018
Fax: (801) 538 - 3267

DFCM APPROVAL STAMP

LICENSED PROFESSIONAL ENGINEER
No. 181563
DAVID E. WESEMANN
04-21-2014
STATE OF UTAH

ARCHITECT-ENGINEER STAMP

Unified State Laboratory Module 2

4451 South 2700 West, Taylorsville, UT 84118

DFCM #:	13020300
Project #:	B13-024
DATE:	ISSUE TYPE:
April 21, 2014	BID SET

MARK	DATE	DESCRIPTION
1	May 8, 2015	ADDENDUM #1

CHECKED BY	D. WESEMANN
DRAWN BY	DLM

FIRST LEVEL AUXILIARY PLAN - AREA C

EY101c

VOLUME 2

C:\Users\dlm\Documents\2013035\Elec-Central_DLM (8432).rvt
5/7/2015 5:29:01 PM

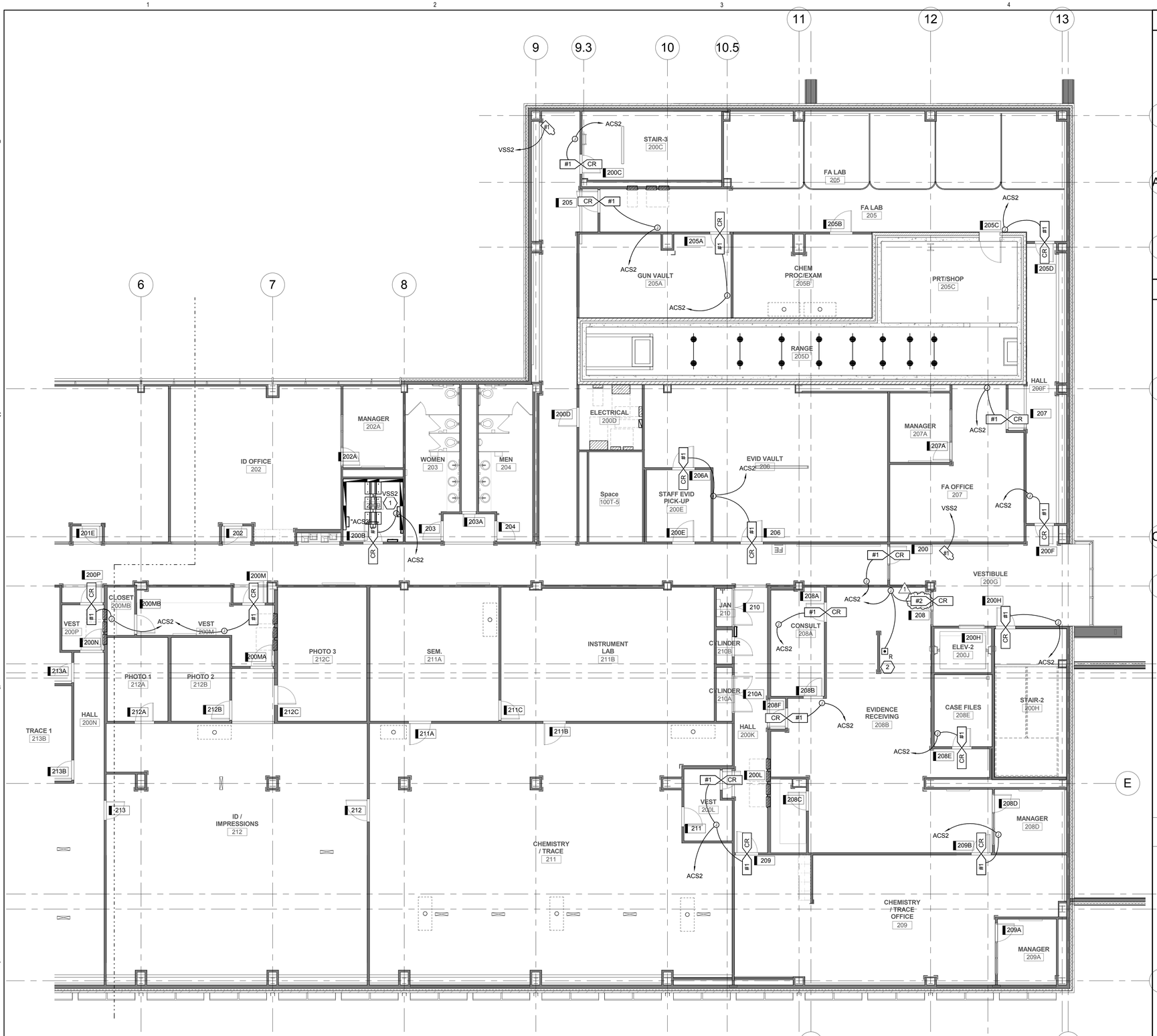

A1 SECOND LEVEL AUXILIARY PLAN - AREA B

SCALE: 1/8" = 1'-0"

GENERAL SHEET NOTES

1 COORDINATE EXACT JUNCTION BOX LOCATIONS SO THAT THEY ARE EASILY ACCESSIBLE AND ARE NOT BEHIND DOORS, FURNITURE, LOWERED PROJECTION SCREENS, ETC.

SHEET KEYNOTES

1 VIDEO SURVEILLANCE CAMERA TERMINATIONS SHALL BE MADE TO CONNECTIVITY HARDWARE AND SWITCHES INSTALLED IN SPARE SPACE OF LAN DATA RACKS.

2 PROVIDE LOCKING CONTROL AT THIS RECEIVING LOCATION FOR THE DOOR INTO ROOM 208.

KEY PLAN

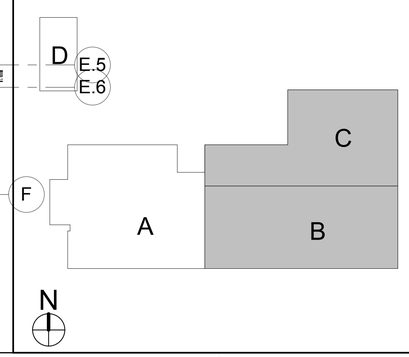

CRSA

649 E. South Temple
Salt Lake City, UT 84102
801.355.5915

MWL

11798 N. Lakeridge Pkwy.
Ashland, VA 23005
804-228-7473

State of Utah
Department of Administrative Services
Division of Facilities Construction & Management
4110 State Office Building
Salt Lake City, Utah 84114
Phone: (801) 538 - 3018
Fax: (801) 538 - 3267

DFCM APPROVAL STAMP

LICENSED PROFESSIONAL ENGINEER
No. 181563
DAVID E. WESEMANN
04-21-2014
STATE OF UTAH

ARCHITECT-ENGINEER STAMP

Unified State Laboratory Module 2

4451 South 2700 West, Taylorsville, UT 84118

DFCM #: 13020300

Project #: B13-024

DATE:	ISSUE TYPE:
April 21, 2014	BID SET

MARK	DATE	DESCRIPTION
1	May 8, 2015	ADDENDUM #1

CHECKED BY: D. WESEMANN

DRAWN BY: DLM

SECOND LEVEL AUXILIARY PLAN - AREA B

EY102b

VOLUME 2

C:\Users\dlm\Documents\2013\3582Elec Central_DLM (8432).rvt
5/7/2015 5:29:10 PM

NOTES

1. PROVIDE RACEWAY AND EQUIPMENT AS INDICATED FOR CARD ACCESS DOOR TYPE INDICATED. REFER TO SECTION 281300 AND SECTION 87100 FOR ADDITIONAL REQUIREMENTS.
2. PROVIDE CONCEALED .75" C TYPICAL FOR LINES SHOWN TO DEVICE BOXES ON PROTECTED SIDE AND UNPROTECTED SIDE ELEVATIONS.
3. LOCATE CARD READER BOX AS INDICATED ON FLOOR PLANS. RACEWAY AND BOXES BY DIV. 26. REFER TO 281300 FOR CARD ACCESS SYSTEM REQUIREMENTS.
4. DOUBLE 4SQ J-BOX ON PROTECTED SIDE OF DOORWAY (SIDE OPPOSITE OF CARD READER) ABOVE ACCESSIBLE CEILING OR IN OTHER ACCESSIBLE LOCATION. PROVIDE COVER FOR J-BOX.
5. ELECTRIC LOCKING HARDWARE (MAG LOCKS, ELECTRIC STRIKES, POWER TRANSFER HINGES, ETC.) BY ASSA ABLOX. REVIEW DOOR HARDWARE SCHEDULE (SECTION 87100) AND FURNISH AND/OR INSTALL AS DIRECTED. CONTACT ENGINEER WITH QUESTIONS OR CONCERNS.

ABBREVIATIONS

DBL	=	DOUBLE
DIR	=	DIRECTION
HDWR	=	HARDWARE
C	=	CONDUIT
4SQ	=	FOUR SQUARE
W/	=	WITH
1G	=	1 GANG
PWR	=	POWER
ACC	=	ACCESSIBLE
TYP	=	TYPICAL
L/PS	=	LOCK POWER SUPPLY
CR	=	CARD READER
CI	=	DOOR CONTACT INDICATOR
EPT	=	ELECTRIC POWER TRANSFER
ES	=	ELECTRIC STRIKE
ED	=	EXIT DEVICE
ML	=	ELECTROMAGNETIC LOCK
KS	=	KEY SWITCH
ACS	=	ACCESS CONTROL SYSTEM
EL	=	ELECTRIC LOCKSET
MD	=	MOTION DETECTOR (REX)
TLC	=	TIME/SYSTEM LOCK CONTROL
ELC	=	EMERGENCY LOCK CONTROL
IDS	=	INTRUSION DETECTION SYSTEM
ADA	=	AUTO DOOR OPENER
REX	=	REQUEST TO EXIT
FA	=	FIRE ALARM SYSTEM
OFP	=	OBTAIN FROM PLANS
A/R	=	AS REQUIRED
AED	=	ACCESS EXIT DEVICE OR LOCKSET (CR ON DOOR - SEE SECTION 87100)
PB	=	REMOTE PUSH BUTTON (REQUEST TO OPEN)
FH	=	FRAME HARNESS
DH	=	DOOR HARNESS

CARD ACCESS DOOR TYPE SCHEDULE

DOOR TYPE #	SYMBOL	DESCRIPTION	PROTECTED SIDE ELEVATION	UNPROTECTED SIDE ELEVATION	LOCK TYPE(S)	DIVISION OF WORK AND COMMENTS
TYPE 1	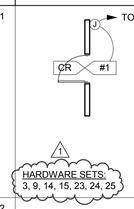	SINGLE DOOR, 1 CARD READER ON DOOR, (FREE EGRESS)	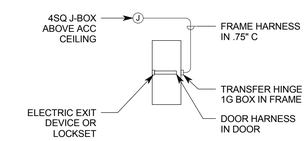	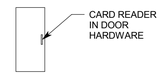	ACCESS EXIT DEVICE OR LOCKSET	SECURITY CONTRACTOR PROVIDES: • AED, L/PS 1 HARDWARE CONTRACTOR PROVIDES: • EPT, FH, DH 1 LOCK CONTROLLED BY: • CR, TLC, FA
TYPE 2	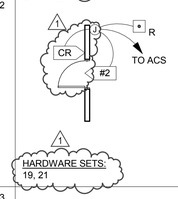	SINGLE DOOR, 1 CARD READER (FREE EGRESS), W/ REMOTE RELEASE BUTTON 1	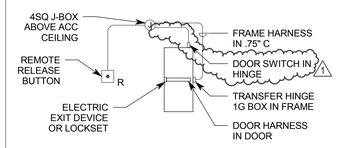	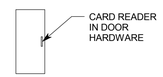	ACCESS EXIT DEVICE OR LOCKSET	SECURITY CONTRACTOR PROVIDES: • CR, L/PS 1 HARDWARE CONTRACTOR PROVIDES: • EL, EPT, PB, FH, DH 1 LOCK CONTROLLED BY: • CR 1 NOTE: HARDWARE SET 21 DOES NOT INCLUDE A REMOTE RELEASE BUTTON.
TYPE 3	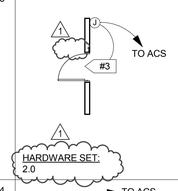	SINGLE DOOR, NO CARD READER WITH DOOR OPENER (ADA) 1	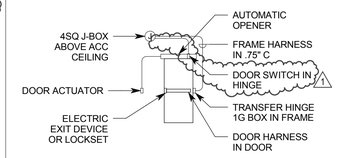	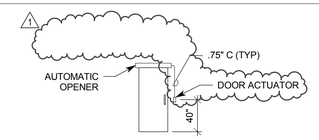	ELECTRIC EXIT DEVICE	SECURITY CONTRACTOR PROVIDES: • N/A 1 HARDWARE CONTRACTOR PROVIDES: • ED, EPT, FH, DH, L/PS, ADA 1 LOCK CONTROLLED BY: • TLC 1
TYPE 4	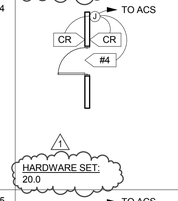	SINGLE DOOR, 2 CARD READERS ON WALL (FREE EGRESS)	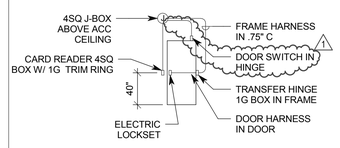	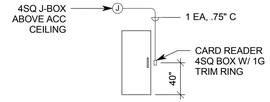	ELECTRIC LOCKSET	SECURITY CONTRACTOR PROVIDES: • (CR(2), L/PS) 1 HARDWARE CONTRACTOR PROVIDES: • EL, EPT, FH, DH 1 LOCK CONTROLLED BY: • CR
TYPE 5	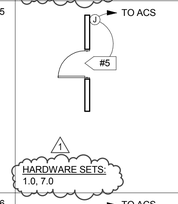	SINGLE DOOR, NO CARD READER, (FREE EGRESS - NO ALARM)	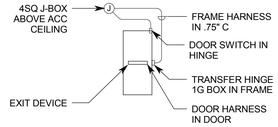		EXIT DEVICE	SECURITY CONTRACTOR PROVIDES: • N/A 1 HARDWARE CONTRACTOR PROVIDES: • ED, FH 1 LOCK CONTROLLED BY: • N/A NOTE: REQUEST TO EXIT IN EXIT DEVICE.
TYPE 6	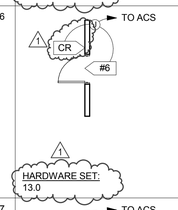	SINGLE DOOR, 1 CARD READER (FREE EGRESS) 1	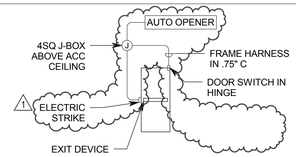	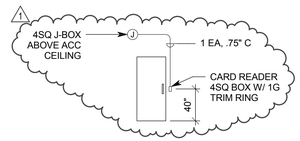	ELECTRIC STRIKE W/ EXIT DEVICE 1	SECURITY CONTRACTOR PROVIDES: • (CR, L/PS) 1 HARDWARE CONTRACTOR PROVIDES: • (ES, ED, FH) 1 LOCK CONTROLLED BY: • (CR, ADA) 1
TYPE 7	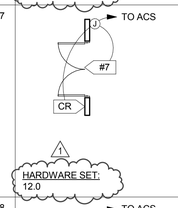	DOUBLE DOOR, 1 CARD READER ON WALL	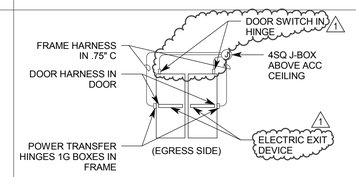	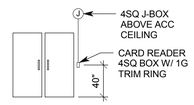	ELECTRIC EXIT DEVICE 1	SECURITY CONTRACTOR PROVIDES: • (CR) 1 HARDWARE CONTRACTOR PROVIDES: • (ED, EPT, FH, DH, L/PS) 1 LOCK CONTROLLED BY: • CR, TLC
TYPE 8	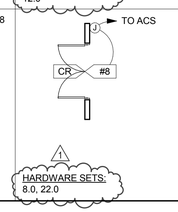	DOUBLE DOOR, 1 CARD READER ON DOOR (FREE EGRESS)	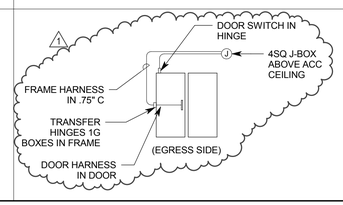	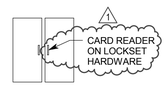	ACCESS EXIT DEVICE OR LOCKSET 1	SECURITY CONTRACTOR PROVIDES: • AED, L/PS 1 HARDWARE CONTRACTOR PROVIDES: • EPT, FH, DH 1 LOCK CONTROLLED BY: • CR

CRSA
649 E. South Temple
Salt Lake City, UT 84102
801.355.5915

MWL
11798 N. Lakeridge Pkwy.
Ashland, VA 23005
804-228-7473

State of Utah
Department of Administrative Services
Division of Facilities Construction & Management
4110 State Office Building
Salt Lake City, Utah 84114
Phone: (801) 538 - 3018
Fax: (801) 538 - 3267

DFCM APPROVAL STAMP

LICENSED PROFESSIONAL ENGINEER
No. 181563
DAVID E. WESEMANN
04-21-2014
STATE OF UTAH

ARCHITECT-ENGINEER STAMP

Unified State Laboratory Module 2

4451 South 2700 West, Taylorsville, UT 84118

DFCM #: 13020300

Project #: B13-024

DATE:	ISSUE TYPE:
April 21, 2014	BID SET

MARK	DATE	DESCRIPTION
1	May 8, 2015	ADDENDUM #1

CHECKED BY	D. WESEMANN
DRAWN BY	DLM

AUXILIARY DETAILS

EY501

VOLUME 2

C:\Users\dlm\Documents\2013\3562\Elec-Central_DLM (8432).rvt
5/7/2015 5:29:11 PM

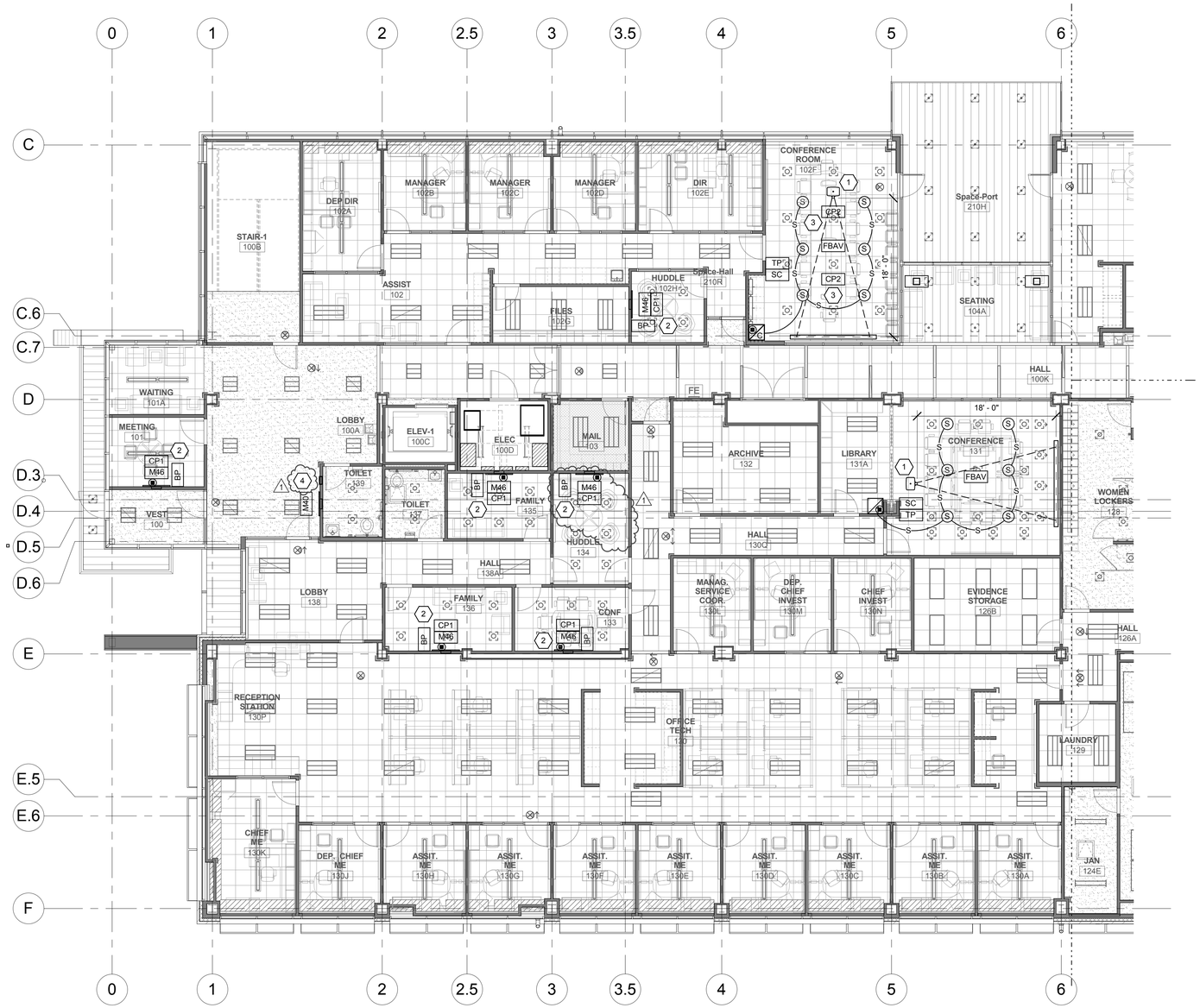

A1 FIRST LEVEL AUDIO VISUAL ROUGH-IN PLAN - AREA A

SCALE: 1/8" = 1'-0"

GENERAL SHEET NOTES

1 COORDINATE EXACT JUNCTION BOX LOCATIONS SO THAT THEY ARE EASILY ACCESSIBLE AND ARE NOT BEHIND DOORS, FURNITURE, LOWERED PROJECTION SCREENS, ETC.

SHEET KEYNOTES

1 INSTALL PROJECTOR ALONG CENTERLINE OF SCREEN IMAGE. COORDINATE EXACT PROJECTOR LOCATION WITH AV CONTRACTOR PRIOR TO INSTALLATION.

2 INSTALL "CP1" JUNCTION BOX DIRECTLY BELOW MONITOR AT OUTLET HEIGHT. INSTALL "BP" JUNCTION BOX AT ELECTRICAL SWITCH HEIGHT WHERE IT DOES NOT INTERFERE WITH MONITOR. COORDINATE WTIH AV INSTALLER.

3 AV INSTALLER TO INSTALL "CP2" FLUSH IN TABLETOP. COORDINATE EXACT LOCATION WITH ARCHITECT.

4 MONITOR TO BE INSTALLED ON FIXED WALL MOUNT.

KEY PLAN

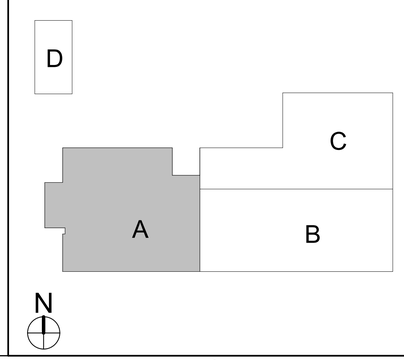

CRSA
649 E. South Temple
Salt Lake City, UT 84102
801.355.5915

MWL
11798 N. Lakeridge Pkwy.
Ashland, VA 23005
804-228-7473

State of Utah
Department of Administrative Services
Division of Facilities Construction & Management
4110 State Office Building
Salt Lake City, Utah 84114
Phone: (801) 538 - 3018
Fax: (801) 538 - 3267

DFCM APPROVAL STAMP

LICENSED PROFESSIONAL ENGINEER
No. 181563
DAVID E. WESEMANN
04-21-2014
STATE OF UTAH

ARCHITECT-ENGINEER STAMP

Unified State Laboratory Module 2

4451 South 2700 West, Taylorsville, UT 84118

DFCM #:	13020300
Project #:	B13-024

DATE:	ISSUE TYPE:
April 21, 2014	BID SET

MARK	DATE	DESCRIPTION
1	May 8, 2015	ADDENDUM #1

CHECKED BY	AWA
DRAWN BY	SJT

FIRST LEVEL PLAN AUDIO VISUAL ROUGH-IN PLAN - AREA A

EJ101a

VOLUME 2

C:\Users\dlm\Documents\2013\3520\Elec-Central_DLM (84320).rvt
5/7/2015 5:22:26 PM

GENERAL SHEET NOTES

1 COORDINATE EXACT JUNCTION BOX LOCATIONS SO THAT THEY ARE EASILY ACCESSIBLE AND ARE NOT BEHIND DOORS, FURNITURE, LOWERED PROJECTION SCREENS, ETC.

SHEET KEYNOTES

1 INSTALL JUNCTION BOX FOR MONITOR AT +72" AFF TO CENTER OF BOX. COORDINATE EXACT LOCATION WITH ARCHITECT. MONITOR TO BE INSTALLED ON SWING-ARM MOUNT.

2 SEE SITE PLAN FOR EXACT LOCATION OF INTERCOM PEDESTAL. STUB CONDUIT TO PEDESTAL.

3 INSTALL JUNCTION BOX FOR MONITOR AT +60" AFF TO CENTER OF BOX. COORDINATE EXACT LOCATION WITH ARCHITECT. MONITOR TO BE INSTALLED ON SWING-ARM MOUNT.

KEY PLAN

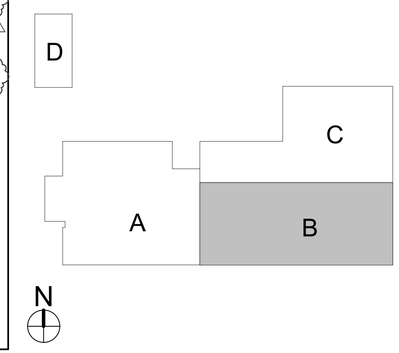

A1 FIRST LEVEL AUDIO VISUAL ROUGH-IN PLAN - AREA B

SCALE: 1/8" = 1'-0"

CRSA
649 E. South Temple
Salt Lake City, UT 84102
801.355.5915

MWL
11798 N. Lakeridge Pkwy.
Ashland, VA 23005
804-228-7473

State of Utah
Department of Administrative Services
Division of Facilities Construction & Management
4110 State Office Building
Salt Lake City, Utah 84114
Phone: (801) 538 - 3018
Fax: (801) 538 - 3267

DFCM APPROVAL STAMP

ARCHITECT-ENGINEER STAMP

No. 181563 DAVID E. WESEMANN 04-21-2014 STATE OF UTAH

Unified State Laboratory Module 2

4451 South 2700 West, Taylorsville, UT 84118

DFCM #:	13020300
Project #:	B13-024
DATE: April 21, 2014	ISSUE TYPE: BID SET

MARK	DATE	DESCRIPTION
1	May 8, 2015	ADDENDUM #1

CHECKED BY	AWA
DRAWN BY	SJT

FIRST LEVEL PLAN AUDIO VISUAL ROUGH-IN PLAN - AREA B

EJ101b

VOLUME 2

C:\Users\dim\Documents\2013032\Elec Central_DLM (84320).rvt
5/7/2015 5:22:35 PM

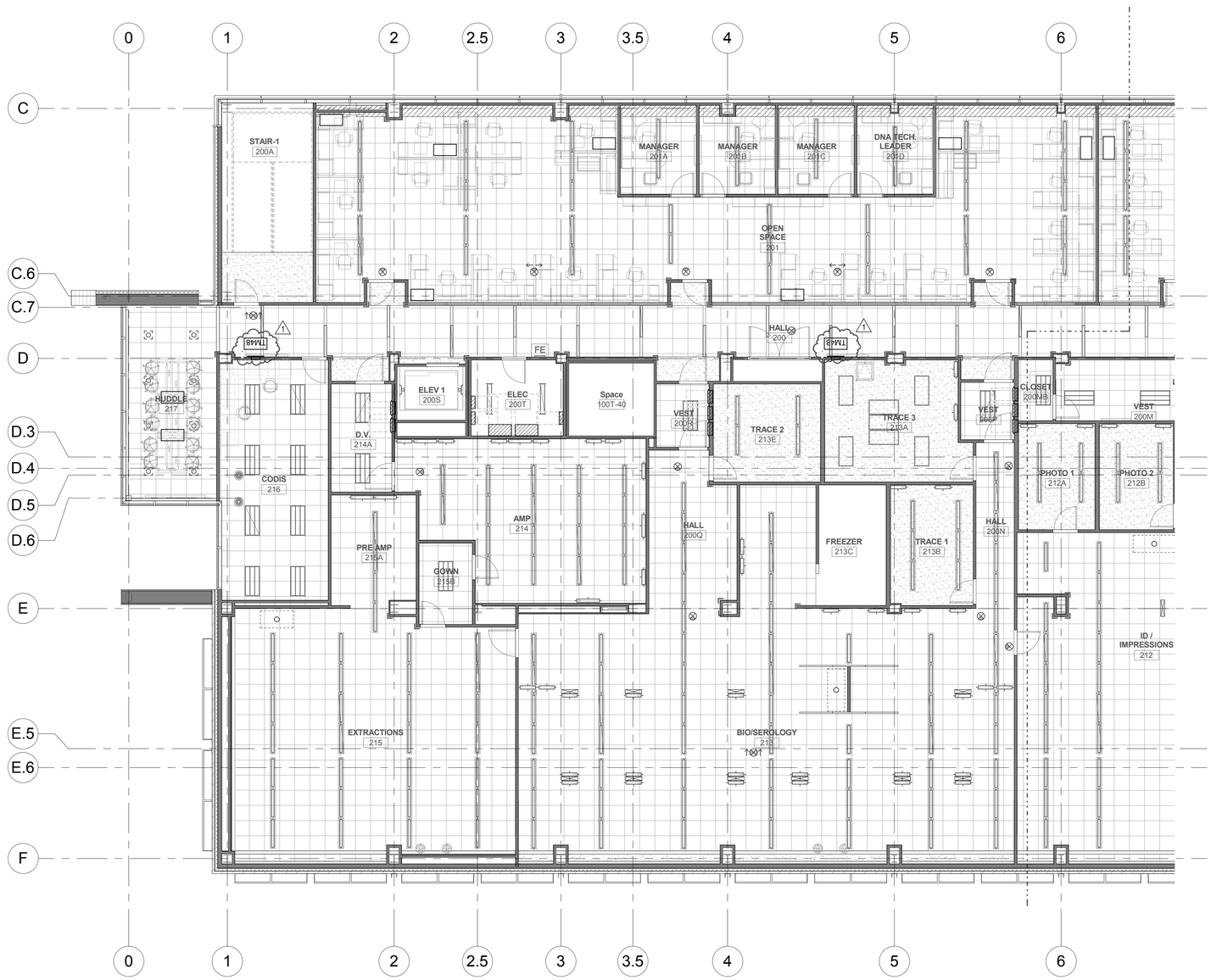

A1 SECOND LEVEL AUDIO VISUAL ROUGH-IN PLAN - AREA A

SCALE: 1/8" = 1'-0"

GENERAL SHEET NOTES

1 COORDINATE EXACT JUNCTION BOX LOCATIONS SO THAT THEY ARE EASILY ACCESSIBLE AND ARE NOT BEHIND DOORS, FURNITURE, LOWERED PROJECTION SCREENS, ETC.

SHEET KEYNOTES

KEY PLAN

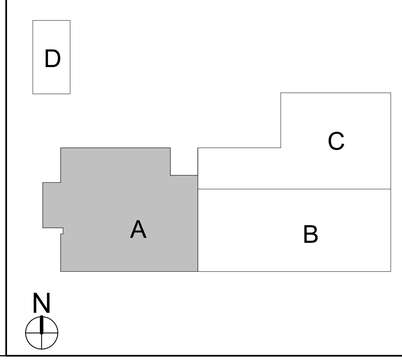

CRSA

649 E. South Temple
Salt Lake City, UT 84102
801.355.5915

MWL

11798 N. Lakeridge Pkwy.
Ashland, VA 23005
804-228-7473

State of Utah
Department of Administrative Services
Division of Facilities Construction & Management
4110 State Office Building
Salt Lake City, Utah 84114
Phone: (801) 538 - 3018
Fax: (801) 538 - 3267

DFCM APPROVAL STAMP

LICENSED PROFESSIONAL ENGINEER
No. 181563
DAVID E. WESEMANN
04-21-2014
STATE OF UTAH

ARCHITECT-ENGINEER STAMP

Unified State Laboratory Module 2

4451 South 2700 West, Taylorsville, UT 84118

DFCM #:	13020300
Project #:	B13-024
DATE: April 21, 2014	ISSUE TYPE: BID SET

MARK	DATE	DESCRIPTION
1	May 8, 2015	ADDENDUM #1

CHECKED BY	AWA
DRAWN BY	SJT

SECOND LEVEL AUDIO VISUAL ROUGH-IN PLAN - AREA A

EJ102a

VOLUME 2

C:\Users\dmi\Documents\2013\3562\Elec Central_DLM (8432).rvt
5/7/2015 5:22:43 PM

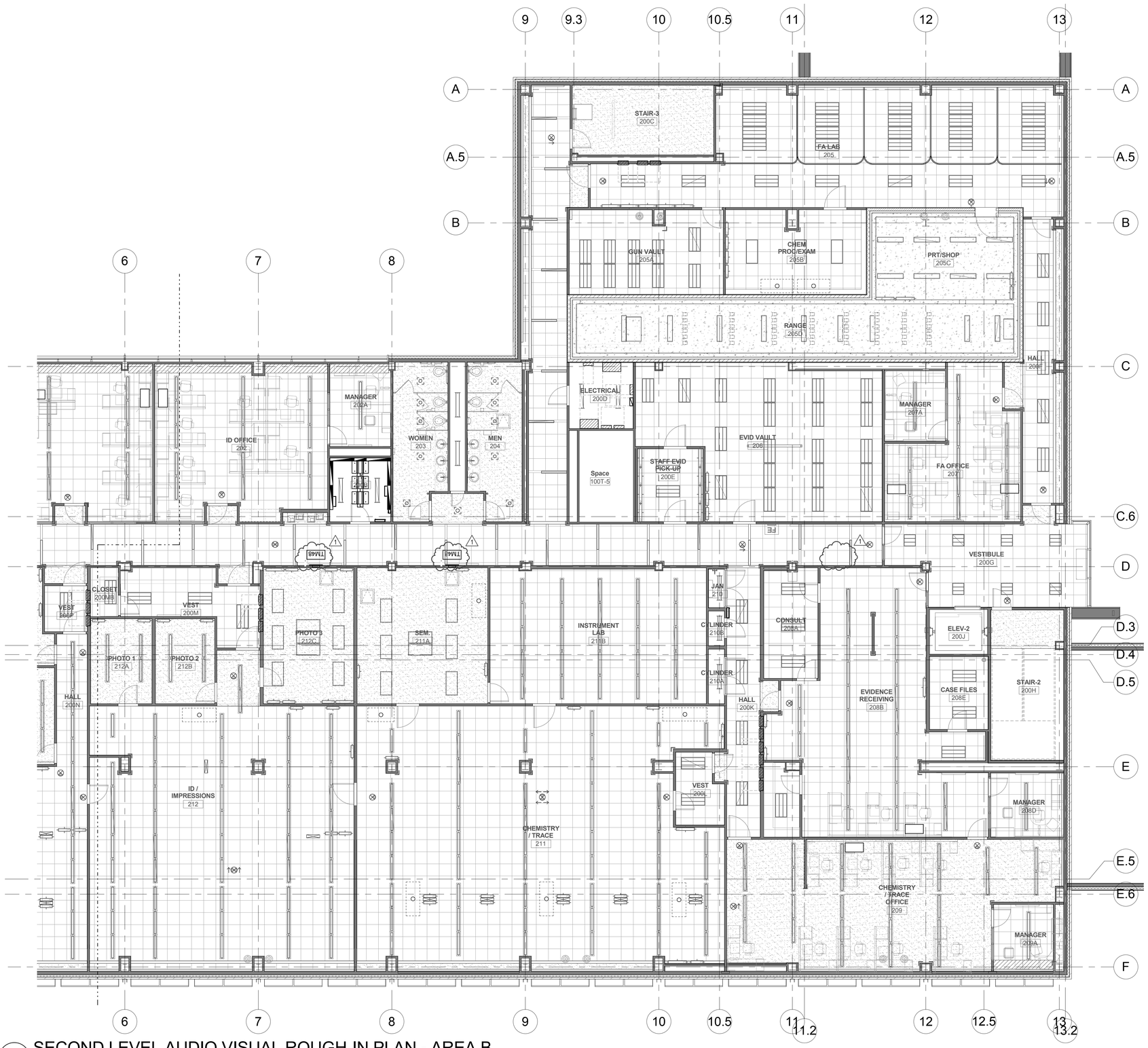

A1 SECOND LEVEL AUDIO VISUAL ROUGH-IN PLAN - AREA B

SCALE: 1/8" = 1'-0"

GENERAL SHEET NOTES

1 COORDINATE EXACT JUNCTION BOX LOCATIONS SO THAT THEY ARE EASILY ACCESSIBLE AND ARE NOT BEHIND DOORS, FURNITURE, LOWERED PROJECTION SCREENS, ETC.

SHEET KEYNOTES

KEY PLAN

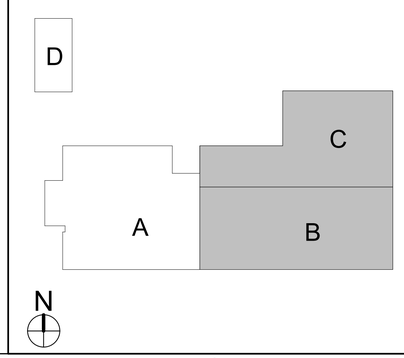

CRSA
649 E. South Temple
Salt Lake City, UT 84102
801.355.5915

MWL
11798 N. Lakeridge Pkwy.
Ashland, VA 23005
804-228-7473

State of Utah
Department of Administrative Services
Division of Facilities Construction & Management
4110 State Office Building
Salt Lake City, Utah 84114
Phone: (801) 538 - 3018
Fax: (801) 538 - 3267

DFCM APPROVAL STAMP

No. 181563
DAVID E. WESEMANN
04-21-2014
STATE OF UTAH
LICENSED PROFESSIONAL ENGINEER

ARCHITECT-ENGINEER STAMP

Unified State Laboratory Module 2

4451 South 2700 West, Taylorsville, UT 84118

DFCM #:	13020300
Project #:	B13-024

DATE:	ISSUE TYPE:
April 21, 2014	BID SET

MARK	DATE	DESCRIPTION
1	May 8, 2015	ADDENDUM #1

CHECKED BY	AWA
DRAWN BY	SJT

SECOND LEVEL AUDIO VISUAL ROUGH-IN PLAN - AREA B

EJ102b

VOLUME 2

C:\Users\dmi\Documents\2013\3362\Elec Central_DLM (84432).rvt
5/7/2015 5:22:54 PM

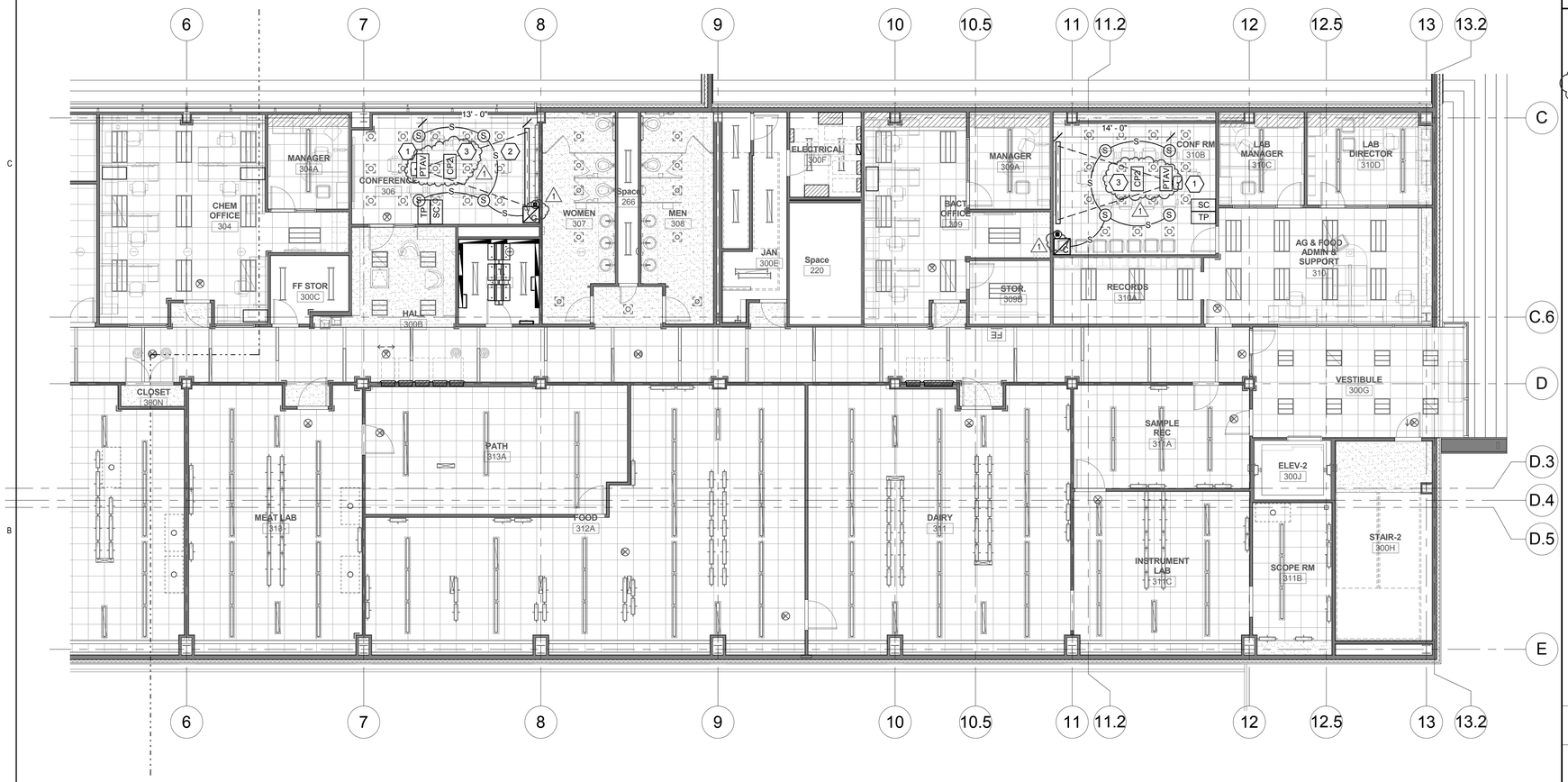

A1 THIRD LEVEL AUDIO VISUAL ROUGH-IN PLAN - AREA B

SCALE: 1/8" = 1'-0"

GENERAL SHEET NOTES

1 COORDINATE EXACT JUNCTION BOX LOCATIONS SO THAT THEY ARE EASILY ACCESSIBLE AND ARE NOT BEHIND DOORS, FURNITURE, LOWERED PROJECTION SCREENS, ETC.

SHEET KEYNOTES

1 INSTALL PROJECTOR ALONG CENTERLINE OF SCREEN IMAGE. COORDINATE EXACT PROJECTOR LOCATION WITH AV CONTRACTOR PRIOR TO INSTALLATION.

2 INSTALL SCREEN TO BE CLEAR OF CABINETS WHEN LOWERED. COORDINATE WITH MILLWORK DRAWINGS.

3 AV INSTALLER TO INSTALL 'CP2' FLUSH IN TABLETOP. COORDINATE EXACT LOCATION WITH ARCHITECT.

KEY PLAN

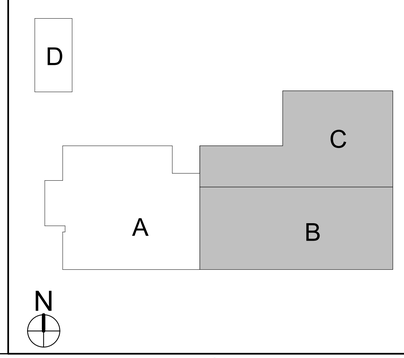

CRSA
649 E. South Temple
Salt Lake City, UT 84102
801.355.5915

MWL
11798 N. Lakeridge Pkwy.
Ashland, VA 23005
804-228-7473

State of Utah
Department of Administrative Services
Division of Facilities Construction & Management
DFCM
4110 State Office Building
Salt Lake City, Utah 84114
Phone: (801) 538 - 3018
Fax: (801) 538 - 3267

DFCM APPROVAL STAMP

LICENSED PROFESSIONAL ENGINEER
No. 181563
DAVID E. WESEMANN
04-21-2014
STATE OF UTAH

ARCHITECT-ENGINEER STAMP

Unified State Laboratory Module 2

4451 South 2700 West, Taylorsville, UT 84118

DFCM #:	13020300
Project #:	B13-024
DATE: April 21, 2014	ISSUE TYPE: BID SET

MARK	DATE	DESCRIPTION
1	May 8, 2015	ADDENDUM #1

CHECKED BY	AWA
DRAWN BY	SJT

THIRD LEVEL AUDIO VISUAL ROUGH-IN PLAN - AREA B

EJ103b

VOLUME 2

C:\Users\dmi\Documents\2013\3362\Elec Central_DLM (8432).rvt
5/7/2015 5:23:03 PM

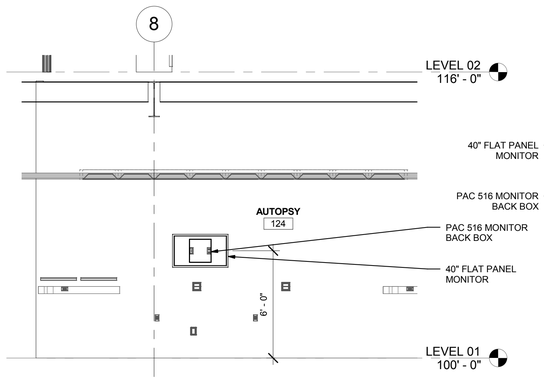

AUTOPSY 124 NE AUDIO VISUAL ROUGH-IN SECTION DETAIL

C1 SCALE: 1/4" = 1'-0"

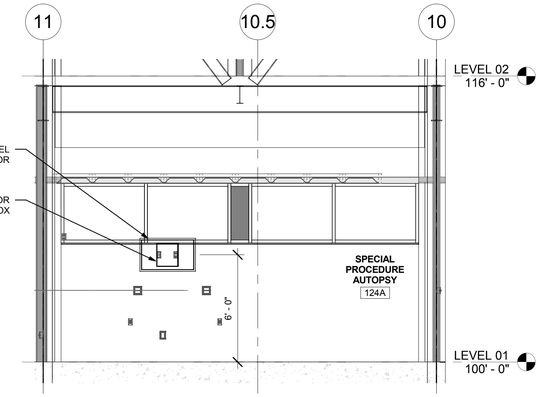

SPECIAL PROCEDURE AUTOPSY 124A AUDIO VISUAL ROUGH-IN SECTION DETAIL

C2 SCALE: 1/4" = 1'-0"

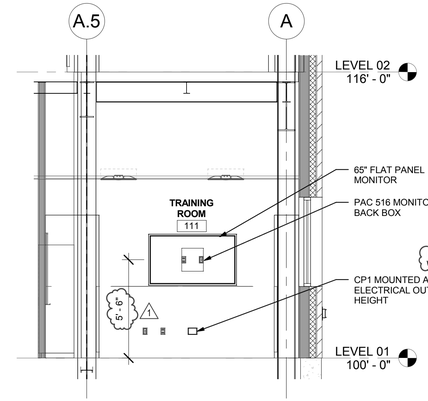

TRAINING ROOM 111 AUDIO VISUAL ROUGH-IN SECTION DETAIL

C3 SCALE: 1/4" = 1'-0"

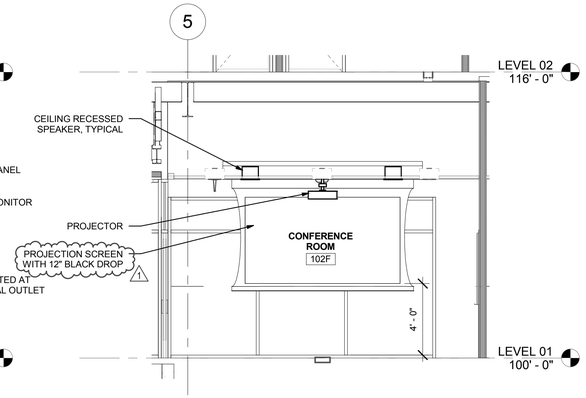

CONFERENCE ROOM 102F AUDIO VISUAL ROUGH-IN SECTION DETAIL

C5 SCALE: 1/4" = 1'-0"

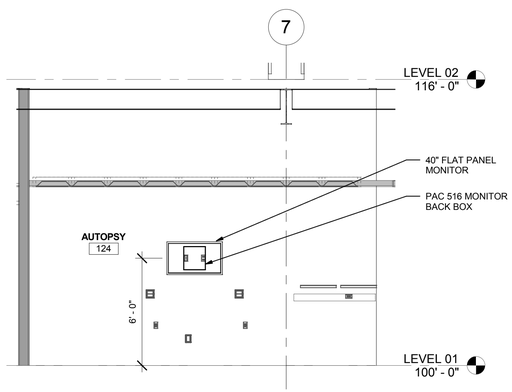

AUTOPSY 124 NW AUDIO VISUAL ROUGH-IN SECTION DETAIL

B1 SCALE: 1/4" = 1'-0"

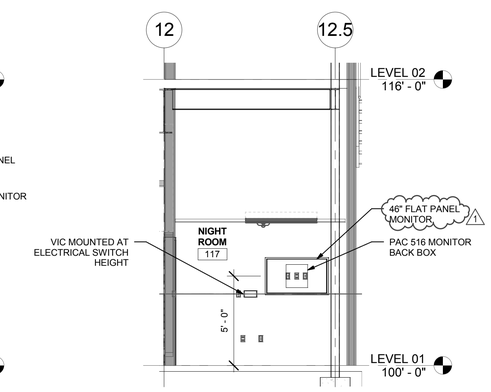

NIGHT ROOM 117 AUDIO VISUAL ROUGH-IN SECTION DETAIL

B2 SCALE: 1/4" = 1'-0"

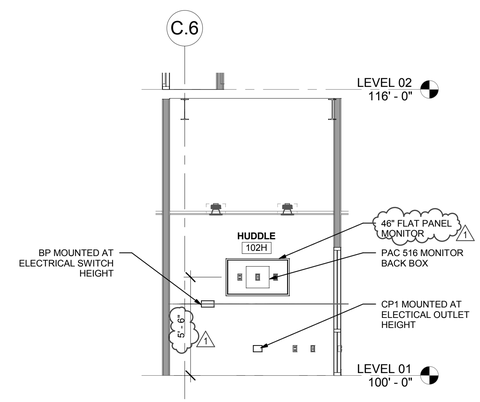

HUDDLE 102H AUDIO VISUAL ROUGH-IN SECTION DETAIL

B3 SCALE: 1/4" = 1'-0"

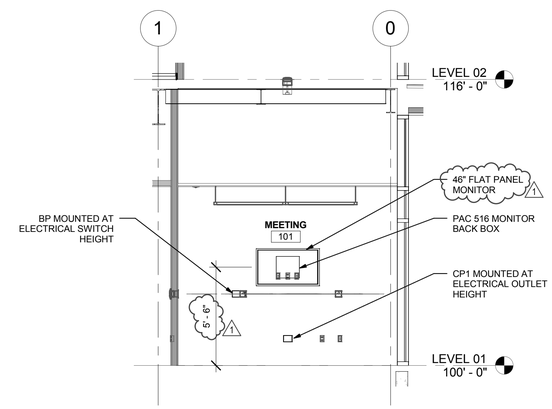

MEETING 101 AUDIO VISUAL ROUGH-IN SECTION DETAIL

B5 SCALE: 1/4" = 1'-0"

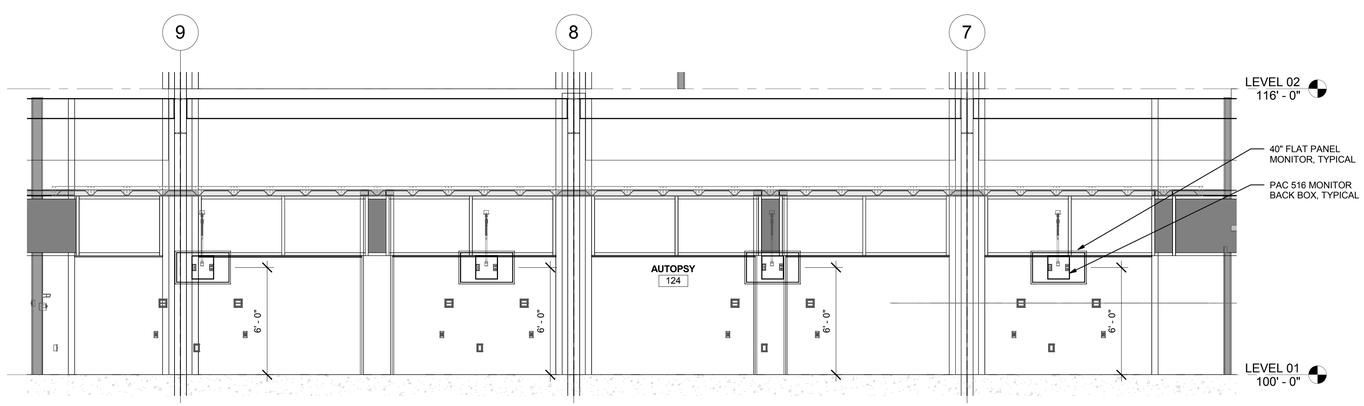

AUTOPSY 124 SOUTH AUDIO VISUAL ROUGH-IN SECTION DETAIL

A1 SCALE: 1/4" = 1'-0"

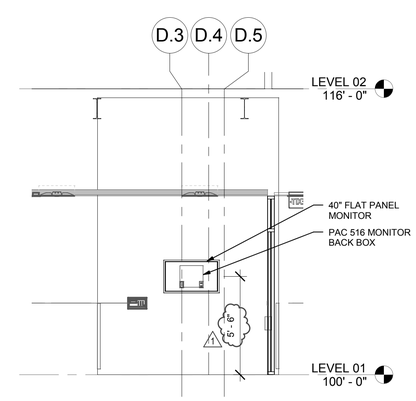

LOBBY 100A AUDIO VISUAL ROUGH-IN SECTION DETAIL

A5 SCALE: 1/4" = 1'-0"

CRSA

649 E. South Temple
Salt Lake City, UT 84102
801.355.5915

MWL

11798 N. Lakeridge Pkwy.
Ashland, VA 23005
804-228-7473

State of Utah
Department of Administrative Services
Division of Facilities
Construction & Management
DFCM
4110 State Office Building
Salt Lake City, Utah 84114
Phone: (801) 538 - 3018
Fax: (801) 538 - 3267

DFCM APPROVAL STAMP

LICENSED PROFESSIONAL ENGINEER
No. 181563
DAVID E. WESEMANN
04-21-2014
STATE OF UTAH

ARCHITECT-ENGINEER STAMP

Unified State Laboratory Module 2

4451 South 2700 West, Taylorsville, UT 84118

DFCM #:	13020300
Project #:	B13-024

DATE:	ISSUE TYPE:
April 21, 2014	BID SET

MARK	DATE	DESCRIPTION
1	May 8, 2015	ADDENDUM #1

CHECKED BY	AWA
DRAWN BY	SJT

AUDIO VISUAL ROUGH-IN SECTION DETAILS

EJ301

VOLUME 2

C:\Users\dm\Documents\20130326Elec-Central_DLM (8432).rvt
5/7/2015 5:23:14 PM

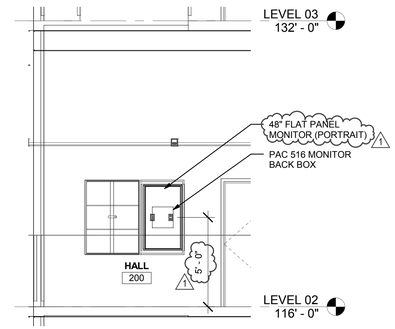

TYPICAL HALL 200 AUDIO VISUAL ROUGH-IN SECTION DETAIL

C3 SCALE: 1/4" = 1'-0"

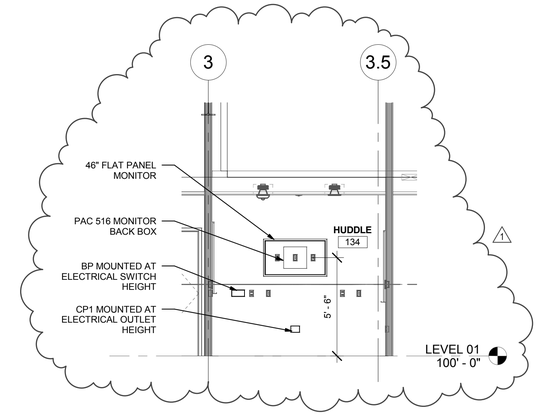

HUDDLE 134 AUDIO VISUAL ROUGH-IN SECTION DETAIL

C5 SCALE: 1/4" = 1'-0"

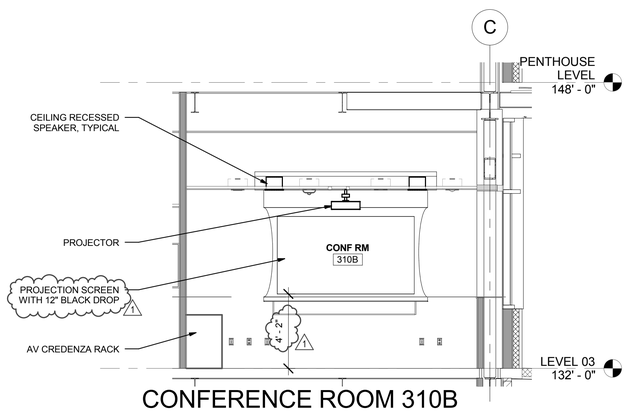

CONFERENCE ROOM 310B AUDIO VISUAL ROUGH-IN SECTION DETAIL

B2 SCALE: 1/4" = 1'-0"

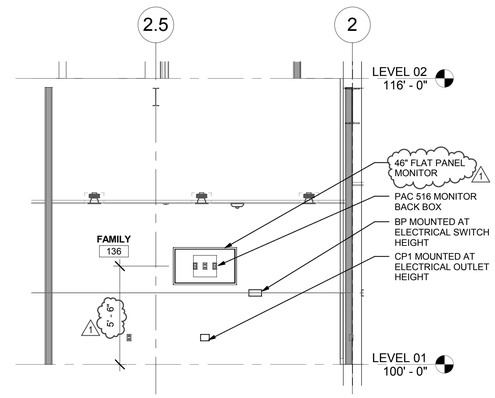

FAMILY 136 AUDIO VISUAL ROUGH-IN SECTION DETAIL

B3 SCALE: 1/4" = 1'-0"

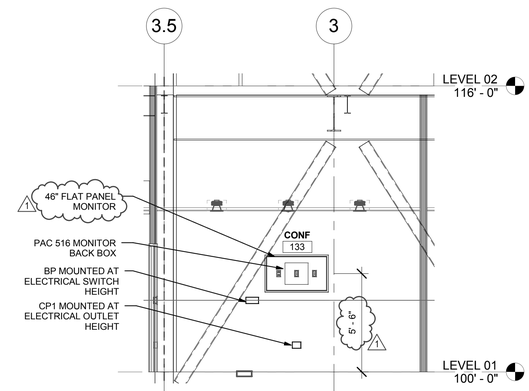

CONF 133 AUDIO VISUAL ROUGH-IN SECTION DETAIL

B5 SCALE: 1/4" = 1'-0"

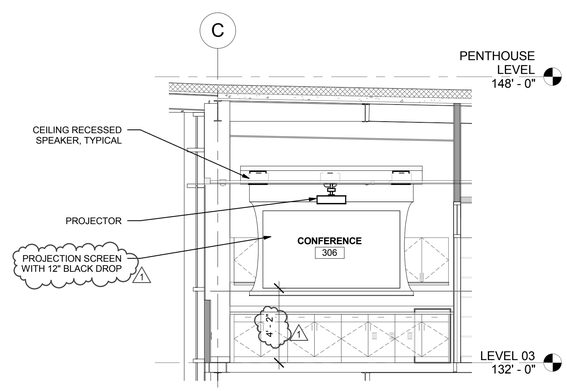

CONFERENCE 306 AUDIO VISUAL ROUGH-IN SECTION DETAIL

A2 SCALE: 1/4" = 1'-0"

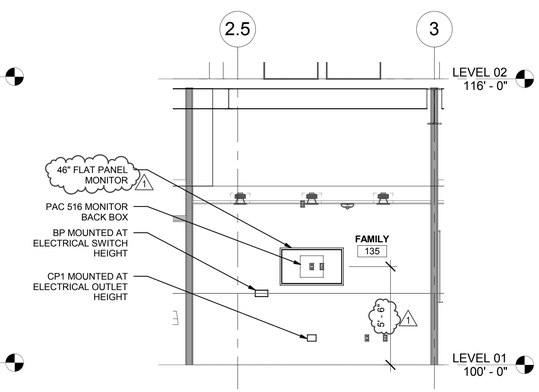

FAMILY 135 AUDIO VISUAL ROUGH-IN SECTION DETAIL

A3 SCALE: 1/4" = 1'-0"

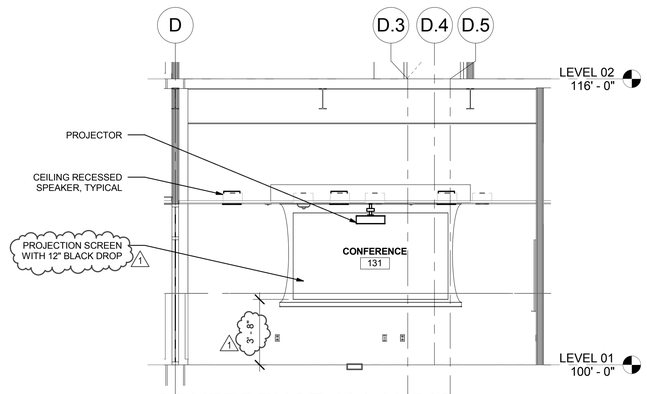

CONFERENCE 131 AUDIO VISUAL ROUGH-IN SECTION DETAIL

A5 SCALE: 1/4" = 1'-0"

CRSA
649 E. South Temple
Salt Lake City, UT 84102
801.355.5915

MWL
11798 N. Lakeridge Pkwy.
Ashland, VA 23005
804-228-7473

State of Utah
Department of Administrative Services
Division of Facilities Construction & Management
4110 State Office Building
Salt Lake City, Utah 84114
Phone: (801) 538 - 3018
Fax: (801) 538 - 3267

DFCM APPROVAL STAMP

LICENSED PROFESSIONAL ENGINEER
No. 181563
DAVID E. WESEMANN
04-21-2014
STATE OF UTAH

ARCHITECT-ENGINEER STAMP

Unified State Laboratory Module 2

4451 South 2700 West, Taylorsville, UT 84118

DFCM #:	13020300
Project #:	B13-024

DATE:	ISSUE TYPE:
April 21, 2014	BID SET

MARK	DATE	DESCRIPTION
1	May 8, 2015	ADDENDUM #1

CHECKED BY	AWA
DRAWN BY	SJT

AUDIO VISUAL ROUGH-IN SECTION DETAILS

EJ302

VOLUME 2

C:\Users\dm\Documents\20130362Elec Central_DLM (8432).rvt
5/7/2015 5:22:22 PM

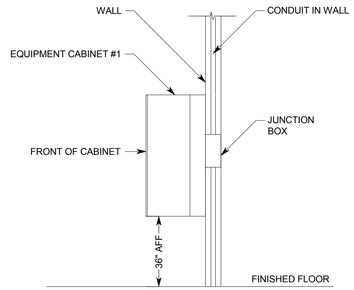

D2 EQUIPMENT CABINET #1 MOUNTING DETAIL

NO SCALE

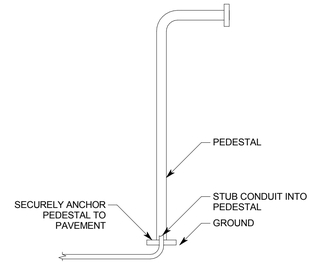

D3 EXTERIOR INTERCOM STATION PEDESTAL INSTALLATION DETAIL

NO SCALE

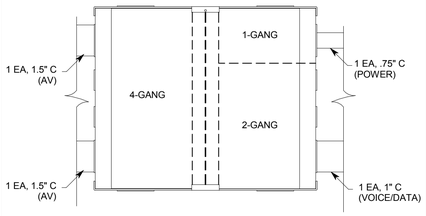

BOTTOM VIEW

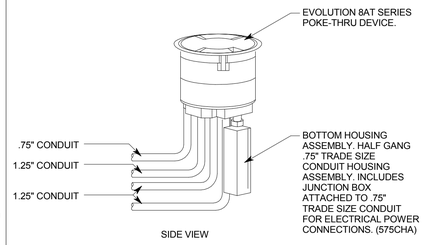

SIDE VIEW

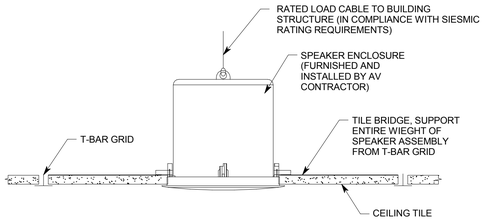

C1 LAY-IN CEILING SPEAKER INSTALLATION DETAIL

NO SCALE

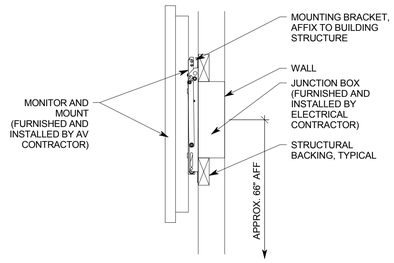

C3 FLAT PANEL INSTALLATION DETAIL

NO SCALE

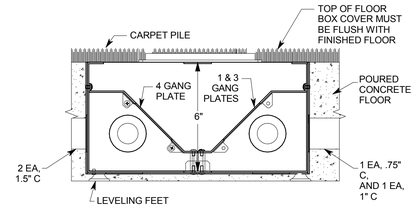

SIDE VIEW

C4 FLOOR BOX CONDUIT TERMINATION DETAIL

NO SCALE

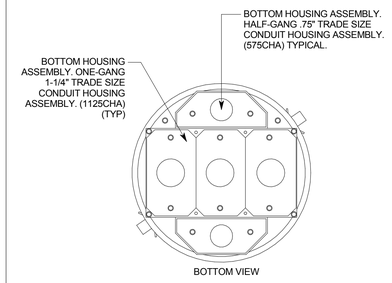

BOTTOM VIEW

C5 TYPICAL 8" POKE-THRU DETAIL

NO SCALE

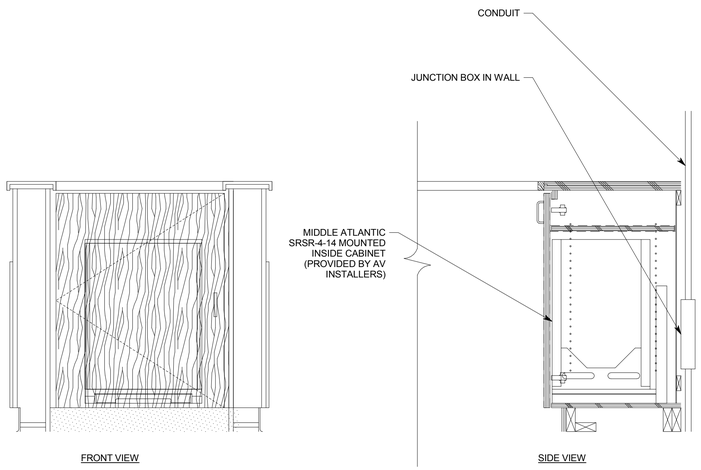

FRONT VIEW

SIDE VIEW

A1 EQUIPMENT CABINET 'C' MOUNTING DETAIL

NO SCALE

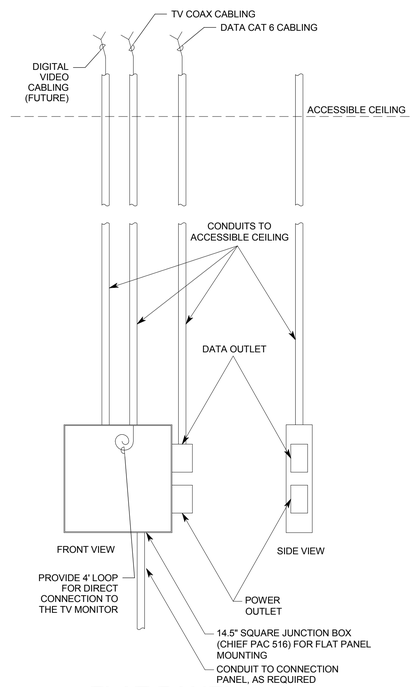

A3 FLAT PANEL WIRING DETAIL

NO SCALE

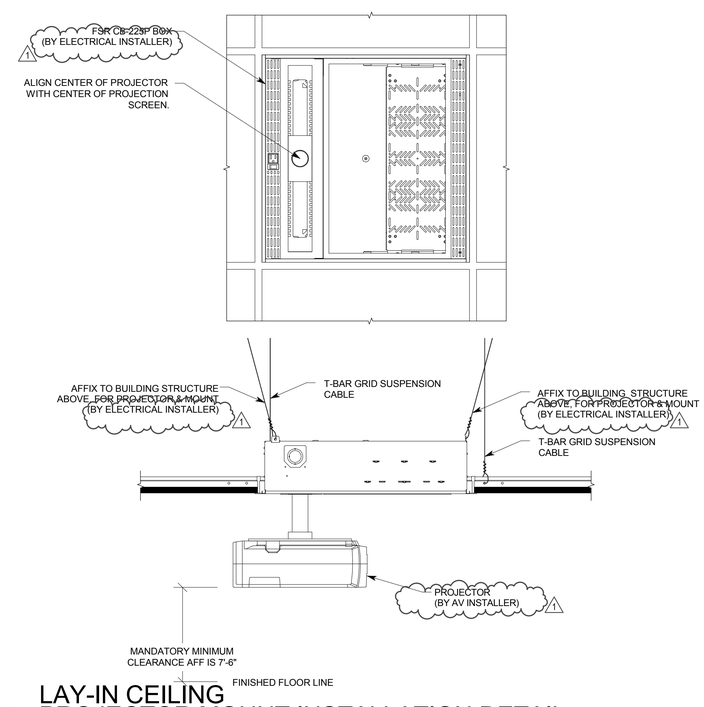

A4 LAY-IN CEILING PROJECTOR MOUNT INSTALLATION DETAIL

NO SCALE

CRSA

649 E. South Temple
Salt Lake City, UT 84102
801.355.5915

MWL

11798 N. Lakeridge Pkwy.
Ashland, VA 23005
804-228-7473

State of Utah
Department of Administrative Services

Division of Facilities Construction & Management
4110 State Office Building
Salt Lake City, Utah 84114
Phone: (801) 538 - 3018
Fax: (801) 538 - 3267

DFCM APPROVAL STAMP

LICENSED PROFESSIONAL ENGINEER
No. 181563
DAVID E. WESEMANN
04-21-2014
STATE OF UTAH

ARCHITECT-ENGINEER STAMP

Unified State Laboratory Module 2

4451 South 2700 West, Taylorsville, UT 84118

DFCM #:	13020300
Project #:	B13-024

DATE:	ISSUE TYPE:
April 21, 2014	BID SET

MARK	DATE	DESCRIPTION
1	May 8, 2015	ADDENDUM #1

CHECKED BY	AWA
DRAWN BY	SJT

AUDIO VISUAL DETAILS

EJ501

VOLUME 2

C:\Users\dlm\Documents\2013\3502\Elec-Central_DLM (8432).rvt
5/7/2015 5:23:24 PM

UNIFIED STATE LABRATORY MODULE 2 - DISPLAY DEVICE SCHEDULE

ROOM NAME	ROOM #	FLOOR #	CEILING HEIGHT	DISPLAY TYPE	PROJECTED IMAGE HEIGHT	PROJECTED IMAGE WIDTH	APPROX. PROJECTOR THROW DISTANCE	FLAT PANEL DIAGONAL SIZE	ASPECT RATIO	COMMENTS
LOBBY	100A	1	10'-0"	FP (DS)				40"	16:9	FIXED MOUNT
MEETING 101	101	1	10'-0"	FP				46"	16:9	FIXED MOUNT
CONFERENCE ROOM	102F	1	10'-0"	PS	58"	104"	18'-0"		16:9	
HUDDLE	102H	1	10'-0"	FP				46"	16:9	FIXED MOUNT
TRAINING	111	1	10'-0"	FP				65"	16:9	FIXED MOUNT
SPEC PROC AUTOPSY	124A	1	10'-0"	FP				40"	16:9	SWING-ARM MOUNT
CONFERENCE	131	1	10'-0"	PS	58"	104"	18'-0"		16:9	
CONF	133	1	10'-0"	FP				46"	16:9	FIXED MOUNT
HUDDLE	134	1	10'-0"	FP				46"	16:9	FIXED MOUNT
FAMILY	135	1	10'-0"	FP				46"	16:9	FIXED MOUNT
FAMILY	136	1	10'-0"	FP				46"	16:9	FIXED MOUNT
AUTOPSY	124	1	10'-0"	FP				40"	16:9	SWING-ARM MOUNT
AUTOPSY	124	1	10'-0"	FP				40"	16:9	SWING-ARM MOUNT
AUTOPSY	124	1	10'-0"	FP				40"	16:9	SWING-ARM MOUNT
AUTOPSY	124	1	10'-0"	FP				40"	16:9	SWING-ARM MOUNT
AUTOPSY	124	1	10'-0"	FP				40"	16:9	SWING-ARM MOUNT
AUTOPSY	124	1	10'-0"	FP				40"	16:9	SWING-ARM MOUNT
NIGHT ROOM	117	1	10'-0"	FP				46"	16:9	SWING-ARM MOUNT
HALL	200	2	10'-0"	FP (DS)				48"	16:9	TOUCH MONITOR, FIXED PORTRAIT MOUNT
HALL	200	2	10'-0"	FP (DS)				48"	16:9	TOUCH MONITOR, FIXED PORTRAIT MOUNT
HALL	200	2	10'-0"	FP (DS)				48"	16:9	TOUCH MONITOR, FIXED PORTRAIT MOUNT
HALL	200	2	10'-0"	FP (DS)				48"	16:9	TOUCH MONITOR, FIXED PORTRAIT MOUNT
CONFERENCE	306	3	10'-0"	PS	52"	92"	13'-0"		16:9	
CONF RM	310B	3	10'-0"	PS	52"	92"	14'-0"		16:9	

PS = PROJECTION SCREEN, FP = FLAT PANEL MONITOR, FP (DS) = FLAT PANEL MONITOR (DIGITAL SIGNAGE)

AUDIO-VIDEO ROUGH-IN SYSTEMS SCHEDULE

SYMBOL	DESCRIPTION	MOUNTING	SPECIAL INSTRUCTIONS
CP1	JUNCTION BOX, 2-GANG, MAXIMUM DEPTH FOR STUD SPACE	FLUSH IN THE WALL AT ELECTRICAL OUTLET HEIGHT, EXCEPT WHERE NOTED ON THE DRAWINGS	
FBAV	FLOOR BOX, FSR FL-500P W/ COVER	FLOOR	SEE 'EP' SHEETS FOR LOCATION. SEE DETAIL. COORDINATE COVER COLOR W/ ARCHITECT.
PTAV	POKE-THRU, WIREMOLD EVOLUTION 8ATCPXX	FLOOR	SEE 'EP' SHEETS FOR LOCATION. SEE DETAIL. COORDINATE COVER COLOR W/ ARCHITECT.
BP	BUTTON CONTROL PANEL, 3-GANG JUNCTION BOX, MAXIMUM DEPTH FOR STUD SPACE	AT ELECTRICAL SWITCH HEIGHT	
SC	PROJECTION SCREEN CONTROL JUNCTION BOX, 4-11/16" BOX W/ 1-GANG MUD RING, MAXIMUM DEPTH FOR STUD SPACE	WALL AT ELECTRICAL SWITCH HEIGHT	
TP	TOUCH PANEL CONTROL, 2-GANG JUNCTION BOX, MAXIMUM DEPTH FOR STUD SPACE	AT ELECTRICAL SWITCH HEIGHT	TOUCH PANEL IS WIDER THAN JUNCTION BOX - PROVIDE 4" CLEAR ON EITHER SIDE OF BOX
VIC P	PEDESTAL MOUNTED INTERCOM PANEL, ENGINEERED PARKING SYSTEMS GNC-1 PEDESTAL	PER SITE PLAN	
VIC M VIC S	VIDEO INTERCOM STATION, 3-GANG JUNCTION BOX, MAXIMUM DEPTH FOR STUD SPACE	AT ELECTRICAL SWITCH HEIGHT	TOUCH PANEL IS WIDER THAN JUNCTION BOX - PROVIDE 4" CLEAR ON EITHER SIDE OF BOX
	PROJECTION SCREEN, RECESSED, MOTORIZED, MODEL: DA-LITE TENSIONED ADVANTAGE ELECTROL W/ LOW VOLTAGE SWITCH AND 12" OF BLACK DROP	CEILING	SEE DISPLAY DEVICE SCHEDULE AND PLANS FOR LOCATIONS AND SIZE INFORMATION. VERIFY EXACT MOUNTING WITH AV INSTALLER AND ARCHITECT. INSTALL WALL MOUNTED SCREEN ENCLOSURES SO THAT BOTTOM OF ENCLOSURE IS FLUSH IN CEILING.
	PROJECTOR CEILING BOX W/ FAN AND INTEGRATED POLE, FSR CB-225P	ABOVE FINISHED CEILING, COORDINATE EXACT LOCATION WITH AV CONTRACTOR	LOCATE PERPENDICULAR TO CENTER OF PROJECTION SCREEN. VERIFY EXACT MOUNTING WITH AV INSTALLER. SEE DETAIL. SUPPORT FROM BUILDING STRUCTURE.
MXX TMXX	FLAT PANEL MONITOR, WALL MOUNT, CHIEF PAC 526FCW	WALL AT APPROXIMATELY 66" AFF, OR AS NOTED, REFER TO FLOOR PLANS	VERIFY EXACT MOUNTING WITH ARCHITECT. SEE DETAIL.
	TV OUTLET, F-CONNECTOR MOUNTED ON RG-6 CABLE	INSIDE MONITOR OR EQUIPMENT RACK JUNCTION BOX	
	DOME PTZ CAMERA, 4-11/16" JUNCTION BOX W/ 2-GANG TRIM RING	CEILING	
S	SPEAKER ENCLOSURE & MOUNTING EQUIPMENT	FLUSH IN FINISHED CEILING	FURNISHED AND INSTALLED BY AV INSTALLER
1	EQUIPMENT RACK #1, WALL MOUNTED, 14"x14" JUNCTION BOX	WALL AT +54" AFF	SEE DETAIL
C	EQUIPMENT RACK, CABINET MOUNT	14"x14" JUNCTION BOX AT +18" AFF TO CENTER OF BOX	VERIFY EXACT MOUNTING WITH ARCHITECTURAL DRAWINGS. SEE DETAILS.
	CONDUIT, EMPTY, REFER TO CONDUIT RISER DIAGRAM FOR SIZES AND QUANTITIES	BEHIND FINISHED SURFACES	.75" MINIMUM DIAMETER
S	SPEAKER CABLE	CONCEALED	FURNISHED AND INSTALLED BY AV INSTALLER

DEFINITIONS

NOTE: ALL DEFINITIONS MAY NOT BE USED.

INDICATED: THE TERM "INDICATED" REFERS TO GRAPHIC REPRESENTATIONS, NOTES, OR SCHEDULES ON THE DRAWINGS, OTHER PARAGRAPHS OR SCHEDULES IN THE SPECIFICATIONS, AND SIMILAR REQUIREMENTS IN THE CONTRACT DOCUMENTS. WHERE TERMS SUCH AS "SHOWN", "NOTED", "SCHEDULED", AND "SPECIFIED" ARE USED, IT IS TO HELP THE READER LOCATE THE REFERENCE, NO LIMITATION ON LOCATION IS INTENDED.

DIRECTED: TERMS SUCH AS "DIRECTED", "REQUESTED", AUTHORIZED", "SELECTED", "APPROVED", "REQUIRED", AND "PERMITTED" MEAN "DIRECTED BY THE ENGINEER", "REQUESTED BY THE ENGINEER", AND SIMILAR PHRASES.

APPROVE: THE TERM "APPROVED", WHERE USED IN CONJUNCTION WITH THE ENGINEER'S ACTION ON THE CONTRACTOR'S SUBMITTALS, APPLICATIONS, AND REQUESTS, IS LIMITED TO THE ENGINEER'S DUTIES AND RESPONSIBILITIES AS STATED IN GENERAL AND SUPPLEMENTARY CONDITIONS.

FURNISH: THE TERM "FURNISH" IS USED TO MEAN "SUPPLY AND DELIVER TO THE PROJECT SITE, READY FOR UNLOADING, UNPACKING, ASSEMBLY, INSTALLATION, AND SIMILAR OPERATIONS."

INSTALL: THE TERM "INSTALL" IS USED TO DESCRIBE OPERATIONS AT PROJECT SITE INCLUDING THE ACTUAL "UNLOADING, UNPACKING, ASSEMBLY, ERECTION, PLACING, ANCHORING, APPLYING, WORKING TO DIMENSION, FINISHING, CURING, PROTECTING, CLEANING, AND SIMILAR OPERATIONS."

PROVIDE: THE TERM "PROVIDE" MEANS "TO FURNISH AND INSTALL, COMPLETE AND READY FOR THE INTENDED USE."

INSTALLER: AN "INSTALLER" IS THE CONTRACTOR OR AN ENTITY ENGAGED BY THE CONTRACTOR, EITHER AS AN EMPLOYEE, SUBCONTRACTOR, OR SUB-SUBCONTRACTOR, FOR PERFORMANCE OF A PARTICULAR CONSTRUCTION ACTIVITY, INCLUDING INSTALLATION, ERECTION, APPLICATION, AND SIMILAR OPERATIONS. INSTALLERS ARE REQUIRED TO BE EXPERIENCED IN THE OPERATIONS THEY ARE ENGAGED TO PERFORM.

TECHNOLOGY SYSTEMS: THE TERM "TECHNOLOGY SYSTEMS" IS USED TO DESCRIBE ALL LOW VOLTAGE SYSTEMS GENERALLY REFERRED TO AS "SPECIAL SYSTEMS". THESE SYSTEMS INCLUDE BUT ARE NOT NECESSARILY LIMITED TO ALL SYSTEMS WHICH UTILIZE VOLTAGES OF LESS THAN 71 VOLTS SUCH AS SOUND SYSTEMS, VIDEO SYSTEMS, TV SYSTEMS, SECURITY SYSTEMS, VOICE AND DATA CABLING SYSTEMS, ETC...

ABBREVIATIONS

NOTE: ALL ABBREVIATIONS MAY NOT BE USED.

"A"	AMP OR AMPS	"IG"	INSULATED GROUND
"ADJ"	ADJACENT	"IMC"	INTERMEDIATE METAL CONDUIT
"AFF"	ABOVE FINISHED FLOOR	"IN/IS"	INSULATED/ISOLATED
"AL"	ALUMINUM	"KVA"	KILO VOLT AMPERES
"C"	CONDUIT	"KW"	KILOWATTS
"CB","C/B"	CIRCUIT BREAKER	"LFMC"	LIQUID TIGHT FLEXIBLE METAL CONDUIT
"CKT"	CIRCUIT	"LFNC"	LIQUID TIGHT FLEXIBLE NONMETALLIC CONDUIT
"CO"	CONVENIENCE OUTLET	"MCA"	MINIMUM CIRCUIT AMPS
"C.O.R."	CONTRACTING OFFICER'S REPRESENTATIVE	"MLO"	MAIN LUGS ONLY
"CU"	COPPER	"N.C."	NORMALLY CLOSED
"EA"	EACH	"N.I.C."	NOT IN CONTRACT
"ELEC"	ELECTRICAL	"N.O."	NORMALLY OPEN
"EM"	EMERGENCY	"O.C."	ON CENTER
"EMT"	ELECTRICAL METALLIC TUBING	"OCP"	OVER CURRENT PROTECTION
"ENT"	ELECTRICAL NONMETALLIC TUBING	"QTY"	QUANTITY
"EQUIP"	EQUIPMENT	"R"	REMOVE
"EX"	EXISTING	"RMC"	RIGID METAL CONDUIT
"FA"	FIRE ALARM	"RNC"	RIGID NONMETALLIC CONDUIT
"FACP"	FIRE ALARM CONTROL PANEL	"RR"	REMOVE AND RELOCATE
"FLA"	FULL LOAD AMPS	"TYP"	TYPICAL
"FMC"	FLEXIBLE METAL CONDUIT	"UF"	UNDER FLOOR
"F.O.B."	FREIGHT ON BOARD	"UG"	UNDER GROUND
"GFI"	GROUND FAULT INTERRUPTER	"W/"	WITH
"GR"	GROUND	"WP"	WEATHER PROOF
"HOA"	HAND-OFF-AUTO	"XFMR"	TRANSFORMER
"HP"	HORSE POWER		

AUDIO-VIDEO GENERAL NOTES

1. IF THE ENCLOSURES, BOXES, & CABINETS SPECIFIED ARE NOT PROVIDED FROM THE MANUFACTURER, WITH THE REQUIRED KNOCK OUTS FOR THE SPECIFIED CONDUIT, FIELD CUT ALL REQUIRED KNOCK OUTS TO TERMINATE THE QUANTITY AND SIZES OF THE SPECIFIED CONDUITS.
2. MAINTAIN MAXIMUM SEPARATION BETWEEN AV SYSTEM CONDUIT AND ALL POWER CONDUIT. MINIMUM SEPARATION REQUIREMENT IS 24".
3. INSTALL NYLON PULL STRINGS IN ALL AV SYSTEM CONDUIT.
4. INSTALL ALL CONDUIT IN A CONCEALED FASHION. SURFACE MOUNTED CONDUIT WILL NOT BE ACCEPTED. CONDUITS AND BOXES ABOVE CEILING HEIGHT MAY BE INSTALLED EXPOSED AND PAINTED TO MATCH CEILING.
5. INSTALL ALL EQUIPMENT IN COMPLIANCE WITH THE MANUFACTURERS WRITTEN INSTRUCTIONS, SEISMIC CODES, AND INDUSTRY WIDE ACCEPTED RIGGING PRACTICES. SUPPORT EQUIPMENT WEIGHT FROM STRUCTURE. DURING THE SUBMITTAL PROCESS, PROVIDE SHOP DRAWINGS WHICH DETAIL PROPOSED MOUNTING FOR ALL SUCH EQUIPMENT.
6. COVER ALL JUNCTION BOXES WITH A BLANK NYLON COVER PLATE.
7. COORDINATE SPECIFIC LOCATION OF CONDUIT STUBS W/ ARCHITECTURAL DRAWINGS.
8. CONDUITS AND JUNCTION BOXES SHOWN ON RISER DIAGRAMS ARE TYPICAL FOR EACH DEVICE IN ROOM.
9. ALL CONDUITS FOR AV ROUGH-IN SHALL BE EMT. ROUGH-IN SHALL BE IN COMPLIANCE WITH ANSI/TIA/EIA 569-B, WHICH INCLUDES, BUT IS NOT LIMITED TO, ALL CONDUITS HAVING NO MORE THAN TWO 90 DEGREE BENDS.
10. THE ROUGH-IN LOCATIONS FOR THE PROJECTOR SHOWN ON THE FLOOR PLAN DRAWINGS ARE APPROXIMATE. FOR ACTUAL DISTANCES, COORDINATE WITH AV INSTALLER.
11. ALL CONNECTION PANELS SHALL BE WITHIN 12" OF POWER AND DATA OUTLETS. NOTIFY ENGINEER IF DISCREPANCY IS FOUND.
12. ALL AV CONDUITS SHALL BE INSTALLED USING SHORTEST RUNS POSSIBLE. THERE SHOULD BE NO UNNECESSARY BENDS IN CONDUIT RUNS.

CRSA
649 E. South Temple
Salt Lake City, UT 84102
801.355.5915

MWL
11798 N. Lakeridge Pkwy.
Ashland, VA 23005
804-228-7473

State of Utah
Department of Administrative Services
Division of Facilities Construction & Management
4110 State Office Building
Salt Lake City, Utah 84114
Phone: (801) 538 - 3018
Fax: (801) 538 - 3267

DFCM APPROVAL STAMP

LICENSED PROFESSIONAL ENGINEER
No. 181563
DAVID E. WESEMANN
04-21-2014
STATE OF UTAH

ARCHITECT-ENGINEER STAMP

Unified State Laboratory Module 2

4451 South 2700 West, Taylorsville, UT 84118

DFCM #: 13020300

Project #: B13-024

DATE:	ISSUE TYPE:
April 21, 2014	BID SET

MARK	DATE	DESCRIPTION
1	May 8, 2015	ADDENDUM #1

CHECKED BY: AWA

DRAWN BY: SJT

AUDIO VISUAL SCHEDULES

EJ601

VOLUME 2

C:\Users\dim\Documents\20130362Elec Central_DLM (8432).rvt
5/4/2015 10:19:57 AM

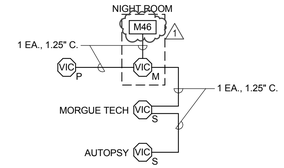

D4 INTERCOM SYSTEM CONDUIT RISER DIAGRAM

NO SCALE

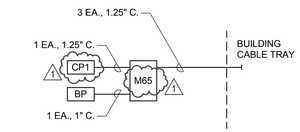

D5 TRAINING ROOM CONDUIT RISER DIAGRAM

NO SCALE (ROOM 111) 1

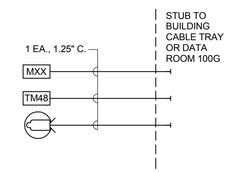

C4 SIGNAGE AND MONITOR CONDUIT RISER DIAGRAM

NO SCALE

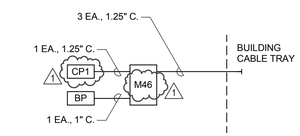

C5 HUDDLE/SMALL CONF ROOM CONDUIT RISER DIAGRAM

NO SCALE (ROOMS 101, H102H, 133, 134, 135, 136) 1

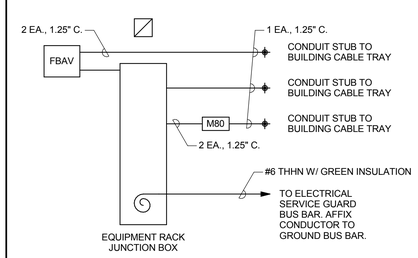

B4 AUDIO-VIDEO RACEWAY CONDUIT RISER DIAGRAM

NO SCALE

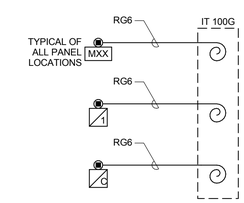

B5 TV DISTRIBUTION RISER DIAGRAM

NO SCALE 1

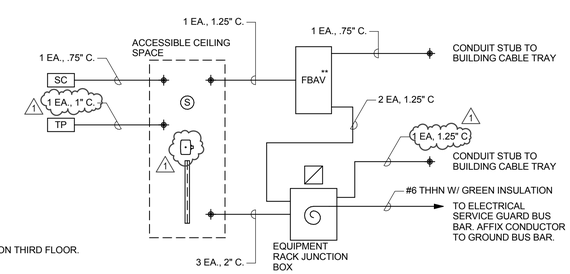

**NOTE:

1. PTAV ON THIRD FLOOR.

A4 AUDIO-VIDEO RACEWAY CONDUIT RISER DIAGRAM

NO SCALE

CRSA

649 E. South Temple
Salt Lake City, UT 84102
801.355.5915

MWL

11798 N. Lakeridge Pkwy.
Ashland, VA 23005
804-228-7473

State of Utah
Department of Administrative Services

Division of Facilities
Construction & Management
4110 State Office Building
Salt Lake City, Utah 84114
Phone: (801) 538 - 3018
Fax: (801) 538 - 3267

DFCM APPROVAL STAMP

LICENSED PROFESSIONAL ENGINEER
No. 181563
DAVID E. WESEMANN
04-21-2014
STATE OF UTAH

ARCHITECT-ENGINEER STAMP

Unified State Laboratory Module 2

4451 South 2700 West,
Taylorsville, UT 84118

DFCM #:	13020300
Project #:	B13-024

DATE:	ISSUE TYPE:
April 21, 2014	BID SET

MARK	DATE	DESCRIPTION
1	May 8, 2015	ADDENDUM #1

CHECKED BY	AWA
DRAWN BY	SJT

AV ROUGH IN RISER DIAGRAMS

EJ602

VOLUME 2

C:\Users\dm\Documents\20130362Elec Central_DLM (8432).rvt
5/4/2015 10:19:59 AM

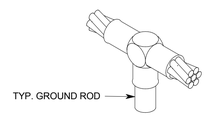

D2 GTC - CADWELD MOLD
SCALE: NTS

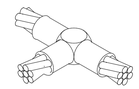

D3 TAC - CADWELD MOLD
SCALE: NTS

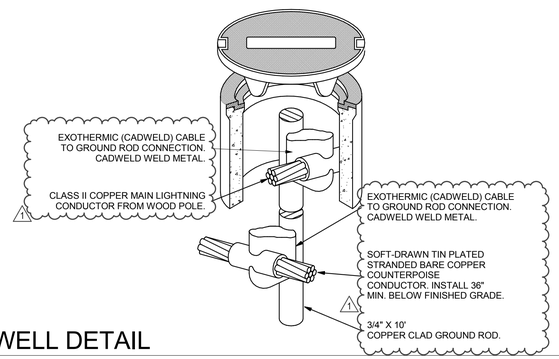

TW TEST WELL DETAIL
SCALE: NTS

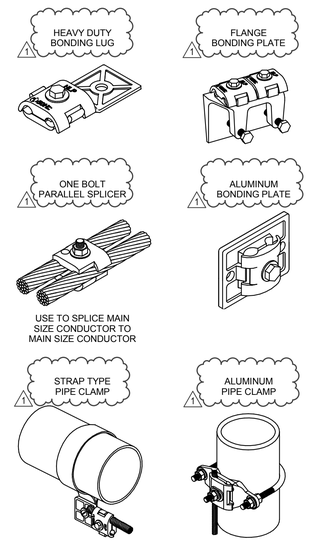

- MISCELLANEOUS
SCALE: NTS

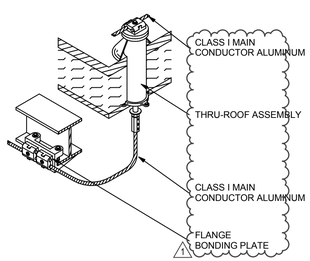

TR THRU-ROOF PENETRATION
SCALE: NTS

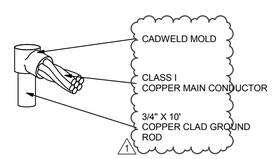

G CADWELD MOLD - GR
SCALE: NTS

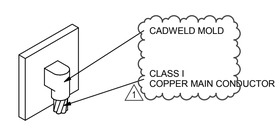

D CADWELD MOLD - VB
SCALE: NTS

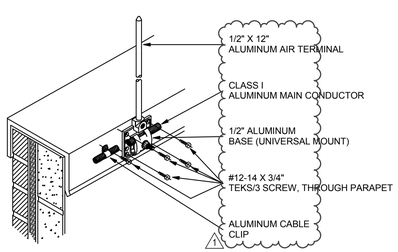

A PARAPET AIR TERMINAL DETAIL
SCALE: NTS

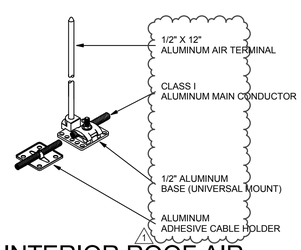

B INTERIOR ROOF AIR TERMINAL
SCALE: NTS

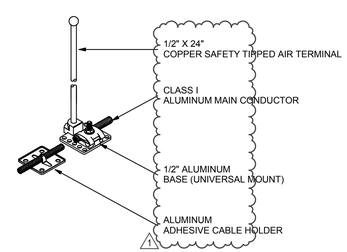

C SAFETY TIP AIR TERMINAL
SCALE: NTS

GENERAL INSTALLATION NOTES

1 LOCATE AIR TERMINALS AS SHOWN. TAKE CARE TO INSURE THAT ALL POINTS ARE WITHIN 2'-0" (609mm) OF OUTSIDE BUILDING EDGE, OUTSIDE CORNERS, RIDGE ENDS, AND THAT MAX SPACING DOES NOT EXCEED 20'-0" (6,096mm), AND THAT MIN PROJECTION ABOVE OBJECT PROTECTED IS 10" (254mm); POINTS PROJECTING 24" (609mm) MAY BE SPACED @ 25'-0" (7,520mm) MAX.

2 MAINTAIN HORIZONTAL OR DOWNWARD COURSING OF MAIN CONDUCTOR. INSURE THAT ALL BENDS HAVE AT LEAST AN 8" (203mm) RADIUS AND DO NOT EXCEED 90 DEGREES.

3 ATTACH ALL EXPOSED ROOF. DOWN LEAD AND BONDING CABLES AT 3'-0" (914mm) ON CENTER MAX. VERIFY COMPATIBILITY OF ADHESIVE ON MEMBRANE ROOF APPLICATION PRIOR TO INSTALLATION.

4 GROUND ELECTRODES SHALL BE INSTALLED AS SHOWN, BUT IN NO INSTANCE SHALL THEY BE LESS THAN 1'-0" (304mm) BELOW GRADE AND 2'-0" (609mm) FROM FOUNDATION WALL. DRIVEN RODS SHALL PENETRATE THE EARTH AT LEAST 10'-0" (3,048mm).

5 BOND TO WATER SERVICE AND OTHER PIPING SYSTEMS AS SHOWN AND AS REQUIRED BY CODE.

6 MAIN SIZE LIGHTNING CONDUCTOR BONDED TO MAIN GROUND BUS. FIELD VERIFY LOCATION 1" CONDUIT FOR ACCESS, INSTALLED BY OTHERS. INTERCONNECT LIGHTNING PROTECTION GROUND TO TELEPHONE AND OTHER BUILDING GROUND SYSTEMS LOCATION FIELD DETERMINED OR AS REQUIRED BY CODE.

7 SYSTEM SHALL BE INSTALLED AS SHOWN TO INSURE PROPER CODE COMPLIANCE AND SYSTEM CERTIFICATION. ANY MAJOR VARIANCE SHALL BE RESUBMITTED FOR APPROVAL.

8 "AS-BUILT" DRAWINGS SHALL BE SUBMITTED IN ACCORDANCE WITH CERTIFICATION PROCEDURES.

9 ALL MATERIALS TO BE UNDERWRITER'S LABORATORIES APPROVED WITH "A" LABELS ON CONDUCTORS @ 10'-0" (3,048mm) INTERVALS AND "B" LABELS ON ALL AIR TERMINALS.

10 COMPLETED INSTALLATION AS SHOWN SHALL BEAR THE APPROPRIATE UL OR L.P.I. CERTIFICATION.

11 INSTALLATION SHALL COMPLY IN ALL RESPECTS TO L.P.I. CODE 175, NFPA 780, & UL96A.

GENERAL BONDING NOTES

A TYPICAL BODIES OF CONDUCTANCE AS NOTED BELOW. USE FULL SIZE CONDUCTOR AND APPROPRIATE FITTING SHOWN FOR CONNECTION.

B (PLUMBING STACK) REQUIRES BONDING WITH MAIN SIZE CABLE ONLY IF WITHIN 6'-0" (1,828mm) OF LIGHTNING PROTECTION SYSTEM.

C TYPICAL BODIES OF INDUCTANCE AS NOTED BELOW. USE SECONDARY SIZE (SMALLER) CONDUCTOR AND APPROPRIATE FITTING SHOWN FOR CONNECTION.

D BONDING CONNECTIONS AND FITTINGS SHOWN ARE TYPICAL EXAMPLES. MAKE ALL CONNECTIONS REQUIRED TO MEET CODES AS NOTED BELOW. ADJUST FITTING TYPE AS REQUIRED TO SUIT FIELD CONDITIONS.

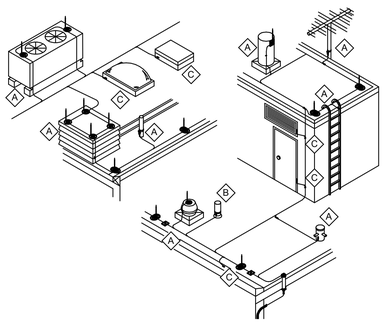

GEN CONSTRUCTION NOTES

1 THIS DRAWING IS INTENDED FOR USE AS A CONSTRUCTION DOCUMENT. FIELD VERIFY ACTUAL CONDITIONS PRIOR TO CONSTRUCTION. CONTACT ELECTRICAL ENGINEER TO CLARIFY ANY DISCREPANCIES.

CRSA
649 E. South Temple
Salt Lake City, UT 84102
801.355.5915

MWL
11798 N. Lakeridge Pkwy.
Ashland, VA 23005
804-228-7473

State of Utah
Department of Administrative Services
Division of Facilities Construction & Management
4110 State Office Building
Salt Lake City, Utah 84114
Phone: (801) 538 - 3018
Fax: (801) 538 - 3267

DFCM APPROVAL STAMP

LICENSED PROFESSIONAL ENGINEER
No. 181563
DAVID E. WESEMANN
04-21-2014
STATE OF UTAH

ARCHITECT-ENGINEER STAMP

Unified State Laboratory Module 2

4451 South 2700 West, Taylorsville, UT 84118

DFCM #:	13020300
Project #:	B13-024
DATE:	ISSUE TYPE:
April 21, 2014	BID SET

MARK	DATE	DESCRIPTION
1	May 8, 2015	ADDENDUM #1

CHECKED BY	D. WESEMANN
DRAWN BY	DLM

LIGHTNING PROTECTION DETAILS

EK501

VOLUME 2

C:\Users\dlm\Documents\20130326Elec-Central_DLM (8432).rvt
5/4/2015 10:20:06 AM

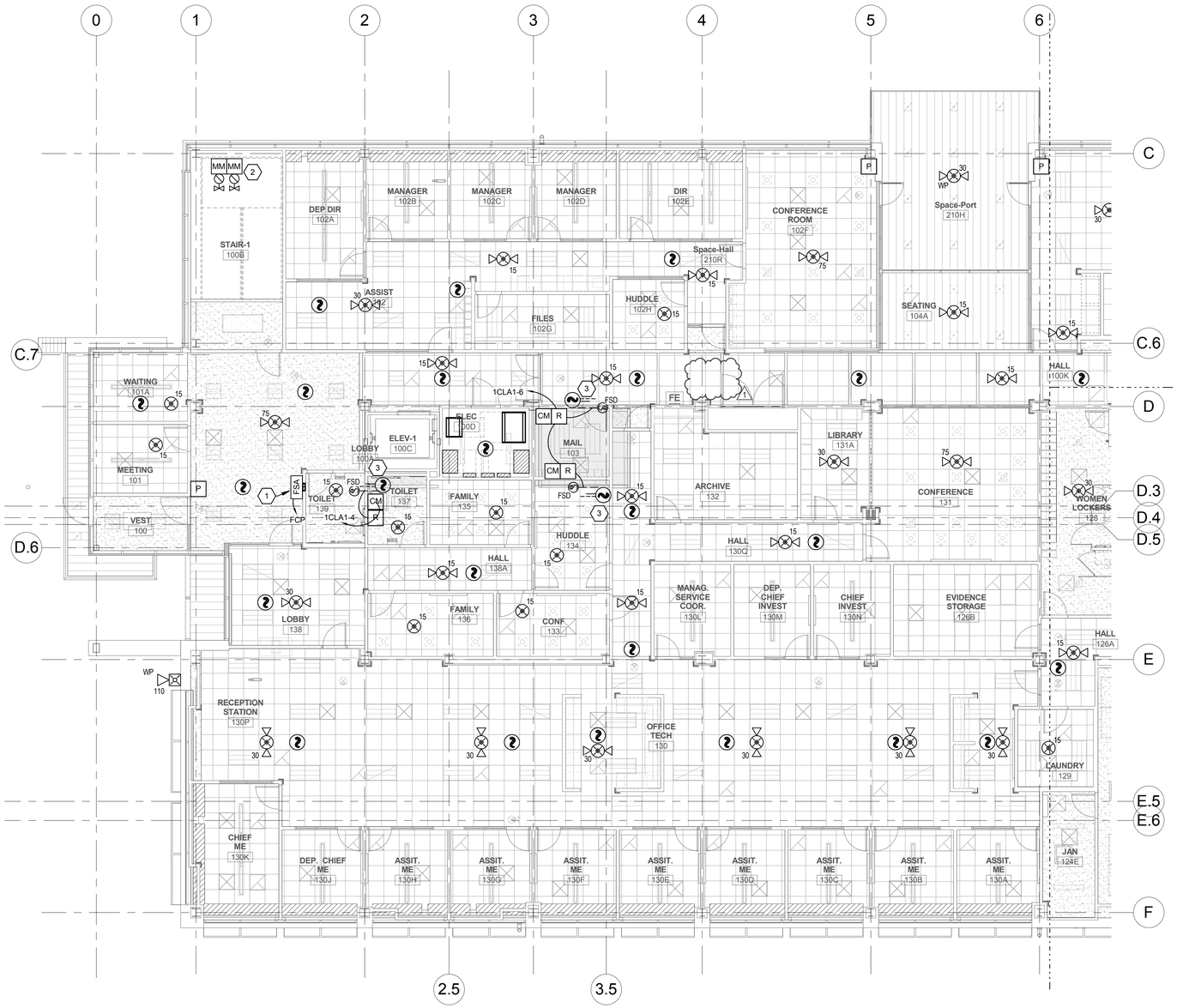

A1 FIRST LEVEL FIRE ALARM PLAN - AREA A

SCALE: 1/8" = 1'-0"

GENERAL SHEET NOTES

1. LOCATIONS OF DUCT SMOKE DETECTORS AND FIRE/SMOKE DAMPERS SHOWN ARE APPROXIMATE. COORDINATE EXACT QUANTITY AND LOCATIONS WITH MECHANICAL DRAWINGS PRIOR TO ROUGH-IN.
2. LOCATIONS OF FLOW, TAMPER AND OTHER FIRE SUPPRESSION MONITORING POINTS SHOWN ARE APPROXIMATE. FIELD VERIFY EXACT QUANTITY AND LOCATIONS WITH SPRINKLER CONTRACTOR PRIOR TO ROUGH-IN.

SHEET KEYNOTES

1. FIRE ALARM ANNUNCIATOR.
2. STANDPIPE ISOLATION VALVES.
3. INSTALL INDICATED DUCT DETECTOR WITHIN 5 FT OF FIRE / SMOKE DAMPER AT APPROXIMATE LOCATION INDICATED PER NFPA 72 REQUIREMENTS.

KEY PLAN

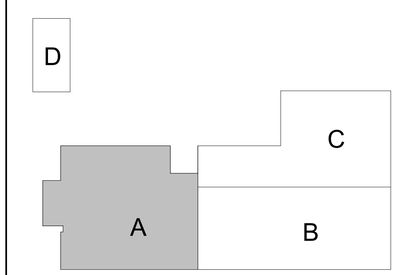

N

CRSA
649 E. South Temple
Salt Lake City, UT 84102
801.355.5915

MWL
11798 N. Lakeridge Pkwy.
Ashland, VA 23005
804-228-7473

State of Utah
Department of Administrative Services
Division of Facilities Construction & Management
4110 State Office Building
Salt Lake City, Utah 84114
Phone: (801) 538 - 3018
Fax: (801) 538 - 3267

DFCM APPROVAL STAMP

LICENSED PROFESSIONAL ENGINEER
No. 181563
DAVID E. WESEMANN
04-21-2014
STATE OF UTAH

ARCHITECT-ENGINEER STAMP

Unified State Laboratory Module 2

4451 South 2700 West, Taylorsville, UT 84118

DFCM #:	13020300
Project #:	B13-024
DATE:	ISSUE TYPE:
April 21, 2014	BID SET

MARK	DATE	DESCRIPTION
1	May 8, 2015	ADDENDUM #1

CHECKED BY	D. WESEMANN
DRAWN BY	DLM

FIRST LEVEL FIRE ALARM PLAN - AREA A

FA101a

VOLUME 2

C:\Users\dlm\Documents\2013\3362Elec Central_DLM (8432).rvt
5/7/2015 5:29:23 PM

GENERAL SHEET NOTES

1. LOCATIONS OF DUCT SMOKE DETECTORS AND FIRE/SMOKE DAMPERS SHOWN ARE APPROXIMATE. COORDINATE EXACT QUANTITY AND LOCATIONS WITH MECHANICAL DRAWINGS PRIOR TO ROUGH-IN.
2. LOCATIONS OF FLOW, TAMPER AND OTHER FIRE SUPPRESSION MONITORING POINTS SHOWN ARE APPROXIMATE. FIELD VERIFY EXACT QUANTITY AND LOCATIONS WITH SPRINKLER CONTRACTOR PRIOR TO ROUGH-IN.

SHEET KEYNOTES

1. FLOOR CONTROL ASSEMBLY LOCATION.
2. COORDINATE WITH FREEZER AND COOLER SUPPLIER TO ENSURE THEIR INSTALLATION REQUIREMENTS ARE MET AND MAINTAINED AS IT RELATES TO THE INSTALLATION OF FIRE ALARM NOTIFICATION DEVICES INSIDE OF THEIR EQUIPMENT.
3. STANDPIPE ISOLATION VALVES.
4. PROVIDE LOW FREQUENCY (520HZ) AUDIBLE DEVICE.

KEY PLAN

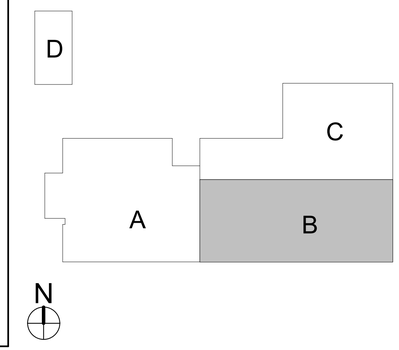

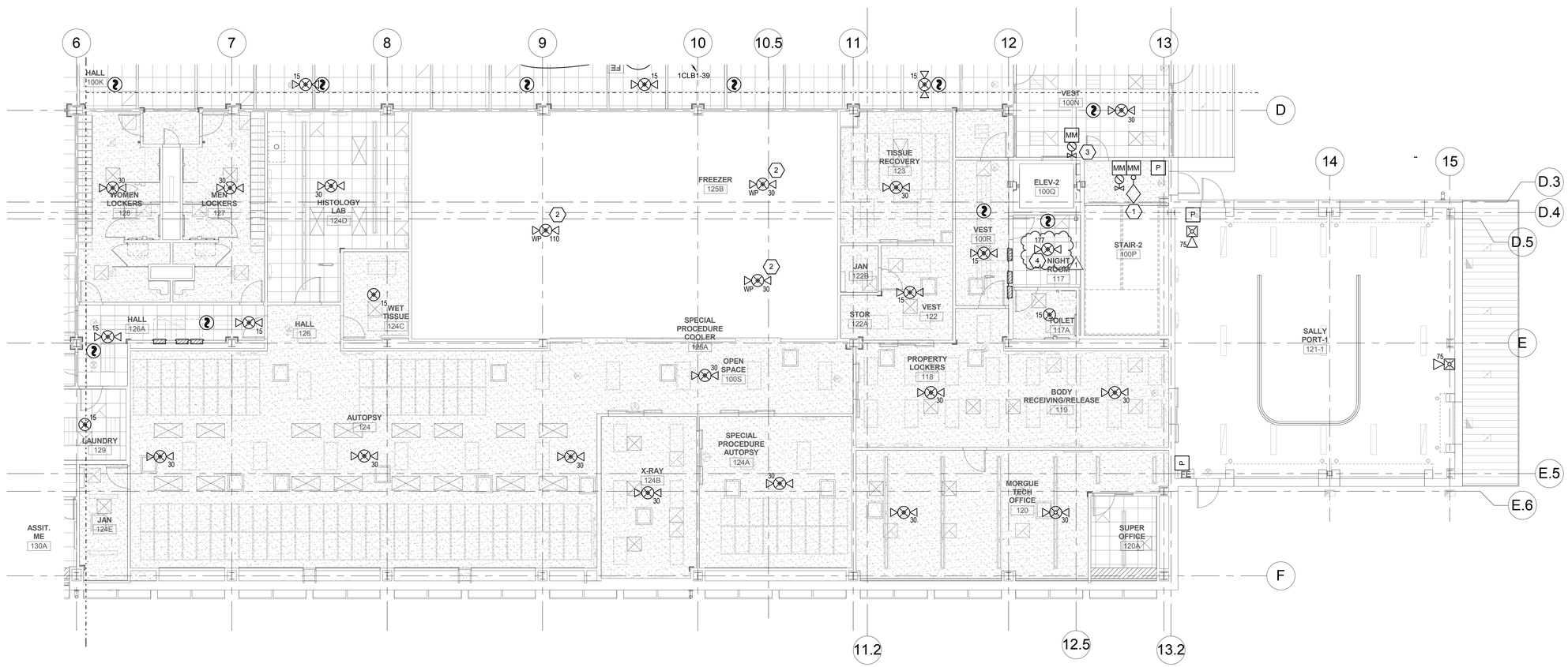

A1 FIRST LEVEL FIRE ALARM PLAN - AREA B

SCALE: 1/8" = 1'-0"

CRSA
649 E. South Temple
Salt Lake City, UT 84102
801.355.5915

MWL
11798 N. Lakeridge Pkwy.
Ashland, VA 23005
804-228-7473

State of Utah
Department of Administrative Services
Division of Facilities Construction & Management
4110 State Office Building
Salt Lake City, Utah 84114
Phone: (801) 538 - 3018
Fax: (801) 538 - 3267

DFCM APPROVAL STAMP

ARCHITECT-ENGINEER STAMP

No. 181563
DAVID E. WESEMANN
04-21-2014
STATE OF UTAH

Unified State Laboratory Module 2

4451 South 2700 West, Taylorsville, UT 84118

DFCM #:	13020300
Project #:	B13-024

DATE:	ISSUE TYPE:
April 21, 2014	BID SET

MARK	DATE	DESCRIPTION
1	May 8, 2015	ADDENDUM #1

CHECKED BY	D. WESEMANN
DRAWN BY	DLM

FIRST LEVEL FIRE ALARM PLAN - AREA B

FA101b

VOLUME 2

C:\Users\dlm\Documents\2013\3362Elec Central_DLM (84432).rvt
5/7/2015 5:29:31 PM

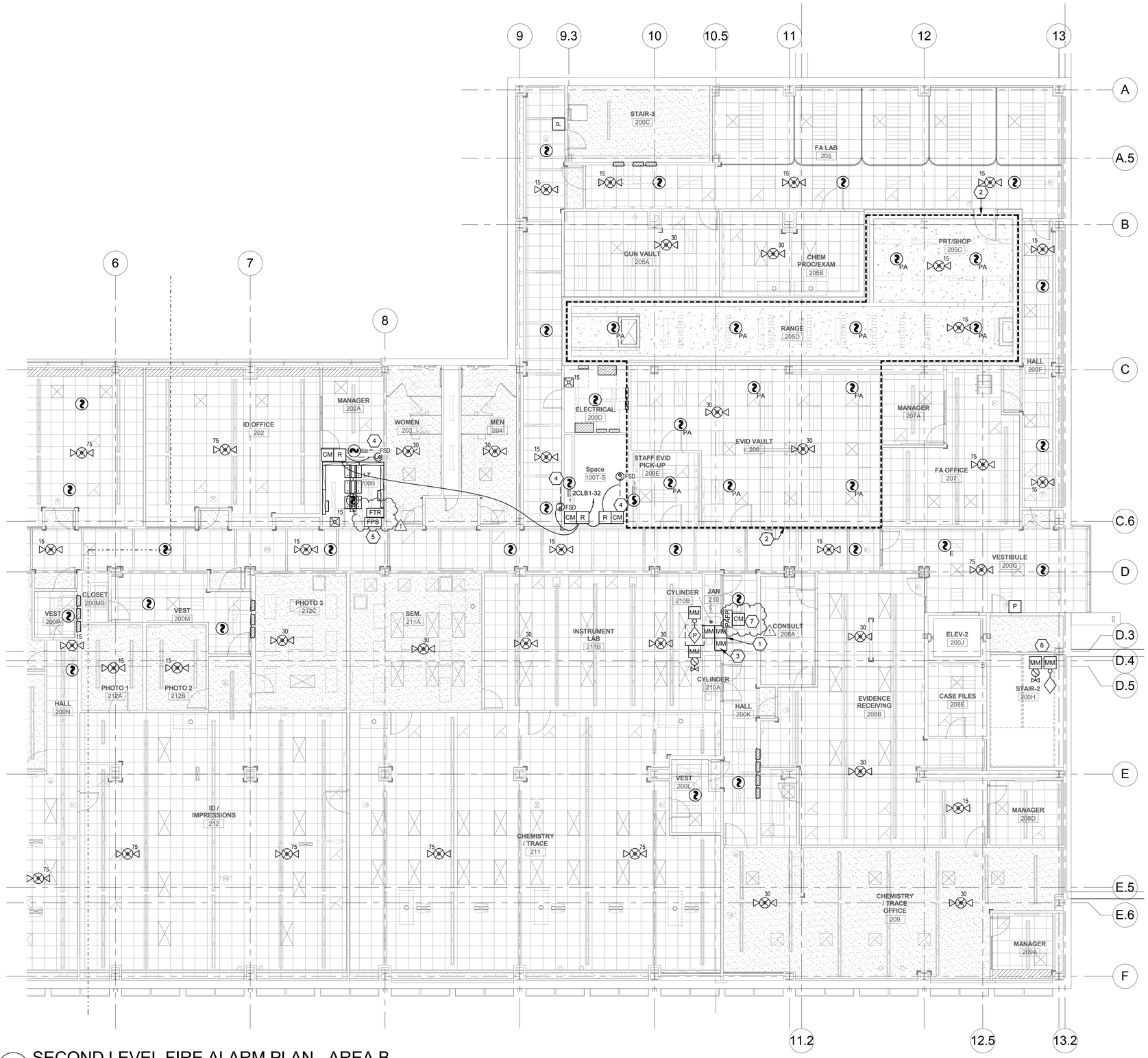

A1 SECOND LEVEL FIRE ALARM PLAN - AREA B

SCALE: 1/8" = 1'-0"

GENERAL SHEET NOTES

1. LOCATIONS OF DUCT SMOKE DETECTORS AND FIRE/SMOKE DAMPERS SHOWN ARE APPROXIMATE. COORDINATE EXACT QUANTITY AND LOCATIONS WITH MECHANICAL DRAWINGS PRIOR TO ROUGH-IN.
2. LOCATIONS OF FLOW, TAMPER AND OTHER FIRE SUPPRESSION MONITORING POINTS SHOWN ARE APPROXIMATE. FIELD VERIFY EXACT QUANTITY AND LOCATIONS WITH SPRINKLER CONTRACTOR PRIOR TO ROUGH-IN.

SHEET KEYNOTES

1. MONITOR MODULES FOR PRE-ACTION FIRE SPRINKLER SYSTEM RELEASING PANEL. PANEL PROVIDED BY FIRE SUPPRESSION CONTRACTOR.
2. PRE-ACTION SYSTEM BOUNDARY. SMOKE DETECTORS, WIRING AND CONDUIT PROVIDED BY FIRE ALARM CONTRACTOR. COORDINATE WITH FIRE SPRINKLER CONTRACTOR FOR CONNECTIONS TO RELEASING PANEL.
3. PRE-ACTION SYSTEM VALVE LOCATION.
4. INSTALL INDICATED DUCT DETECTOR WITHIN 5 FT OF FIRE / SMOKE DAMPER AT APPROXIMATE LOCATION INDICATED PER NFPA 72 REQUIREMENTS.
5. FIRE ALARM POWER SUPPLY/TRANSPONDER.
6. FLOOR CONTROL ASSEMBLY LOCATION.
7. CONTROL MODULE FOR PRE-ACTION RELEASING (IF NECESSARY).

KEY PLAN

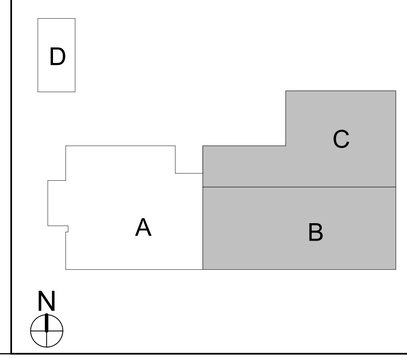

CRSA
649 E. South Temple
Salt Lake City, UT 84102
801.355.5915

MWL
11798 N. Lakeridge Pkwy.
Ashland, VA 23005
804-228-7473

State of Utah
Department of Administrative Services
Division of Facilities Construction & Management
4110 State Office Building
Salt Lake City, Utah 84114
Phone: (801) 538 - 3018
Fax: (801) 538 - 3267

DFCM APPROVAL STAMP

LICENSED PROFESSIONAL ENGINEER
No. 181563
DAVID E. WESEMANN
04-21-2014
STATE OF UTAH

ARCHITECT-ENGINEER STAMP

Unified State Laboratory Module 2

4451 South 2700 West, Taylorsville, UT 84118

DFCM #:	13020300
Project #:	B13-024

DATE:	ISSUE TYPE:
April 21, 2014	BID SET

MARK	DATE	DESCRIPTION
1	May 8, 2015	ADDENDUM #1

CHECKED BY	D. WESEMANN
DRAWN BY	DLM

SECOND LEVEL FIRE ALARM PLAN - AREA B

FA102b

VOLUME 2

C:\Users\dlm\Documents\2013\3626Elec-Central_DLM (8432).rvt
5/7/2015 5:29:41 PM

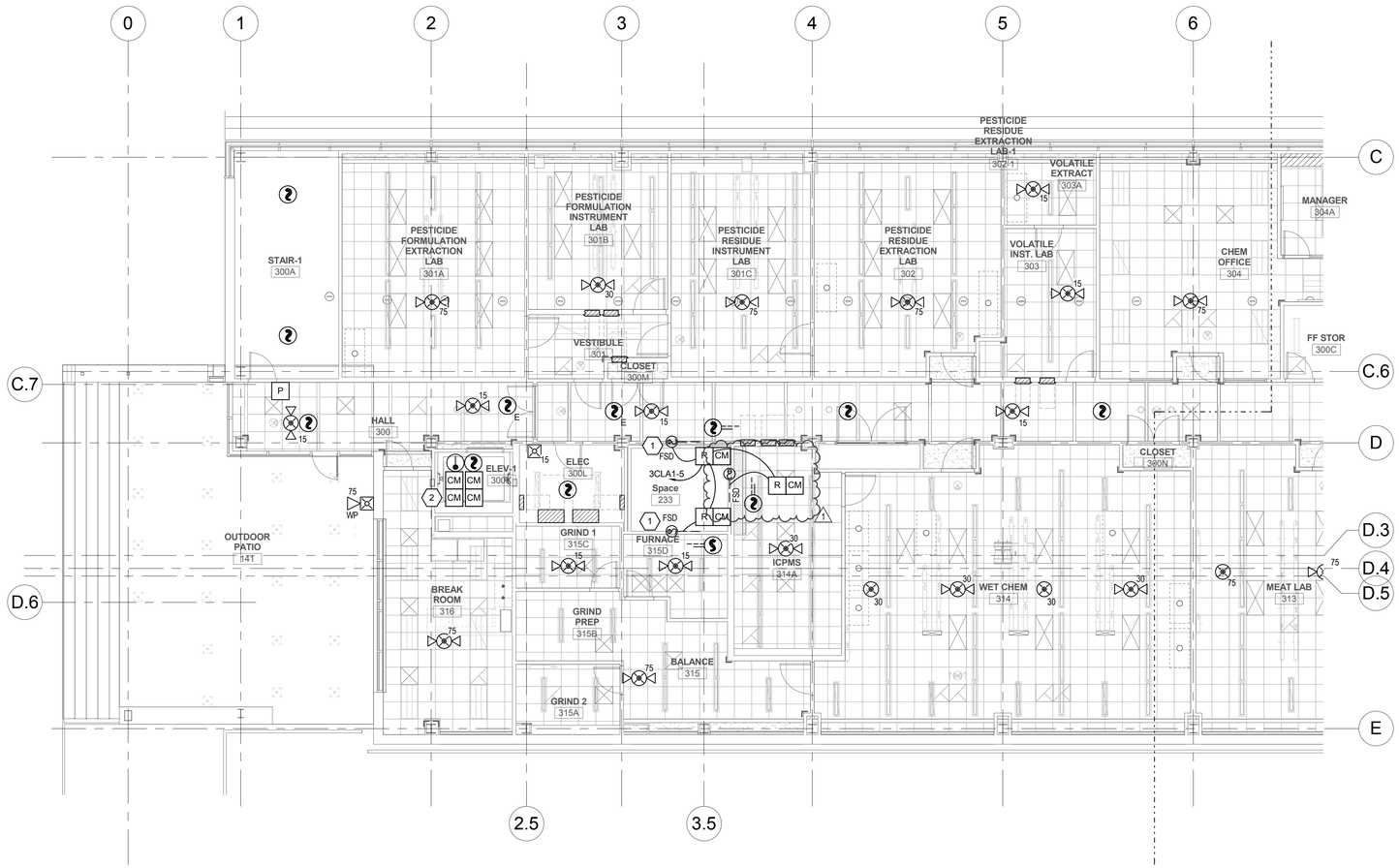

A1 THIRD LEVEL FIRE ALARM PLAN - AREA A

SCALE: 1/8" = 1'-0"

GENERAL SHEET NOTES

1 LOCATIONS OF DUCT SMOKE DETECTORS AND FIRE/SMOKE DAMPERS SHOWN ARE APPROXIMATE. COORDINATE EXACT QUANTITY AND LOCATIONS WITH MECHANICAL DRAWINGS PRIOR TO ROUGH-IN.

2 LOCATIONS OF FLOW, TAMPER AND OTHER FIRE SUPPRESSION MONITORING POINTS SHOWN ARE APPROXIMATE. FIELD VERIFY EXACT QUANTITY AND LOCATIONS WITH SPRINKLER CONTRACTOR PRIOR TO ROUGH-IN.

SHEET KEYNOTES

1 INSTALL INDICATED DUCT DETECTOR WITHIN 5 FT OF FIRE / SMOKE DAMPER AT APPROXIMATE LOCATION INDICATED PER NFPA 72 REQUIREMENTS.

2 CONTROL MODULES FOR ELEVATOR INTERFACE.

KEY PLAN

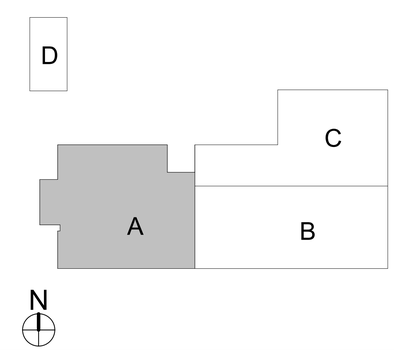

CRSA
649 E. South Temple
Salt Lake City, UT 84102
801.355.5915

MWL
11798 N. Lakeridge Pkwy.
Ashland, VA 23005
804-228-7473

State of Utah
Department of Administrative Services
Division of Facilities Construction & Management
DFCM
4110 State Office Building
Salt Lake City, Utah 84114
Phone: (801) 538 - 3018
Fax: (801) 538 - 3267

DFCM APPROVAL STAMP

LICENSED PROFESSIONAL ENGINEER
No. 181563
DAVID E. WESEMANN
04-21-2014
STATE OF UTAH

ARCHITECT-ENGINEER STAMP

Unified State Laboratory Module 2

4451 South 2700 West, Taylorsville, UT 84118

DFCM #:	13020300
Project #:	B13-024

DATE:	ISSUE TYPE:
April 21, 2014	BID SET

MARK	DATE	DESCRIPTION
1	May 8, 2015	ADDENDUM #1

CHECKED BY	D. WESEMANN
DRAWN BY	DLM

THIRD LEVEL FIRE ALARM PLAN - AREA A

FA103a

VOLUME 2

C:\Users\dlm\Documents\20130302Elec Central_DLM (8432).rvt
5/7/2015 5:29:49 PM

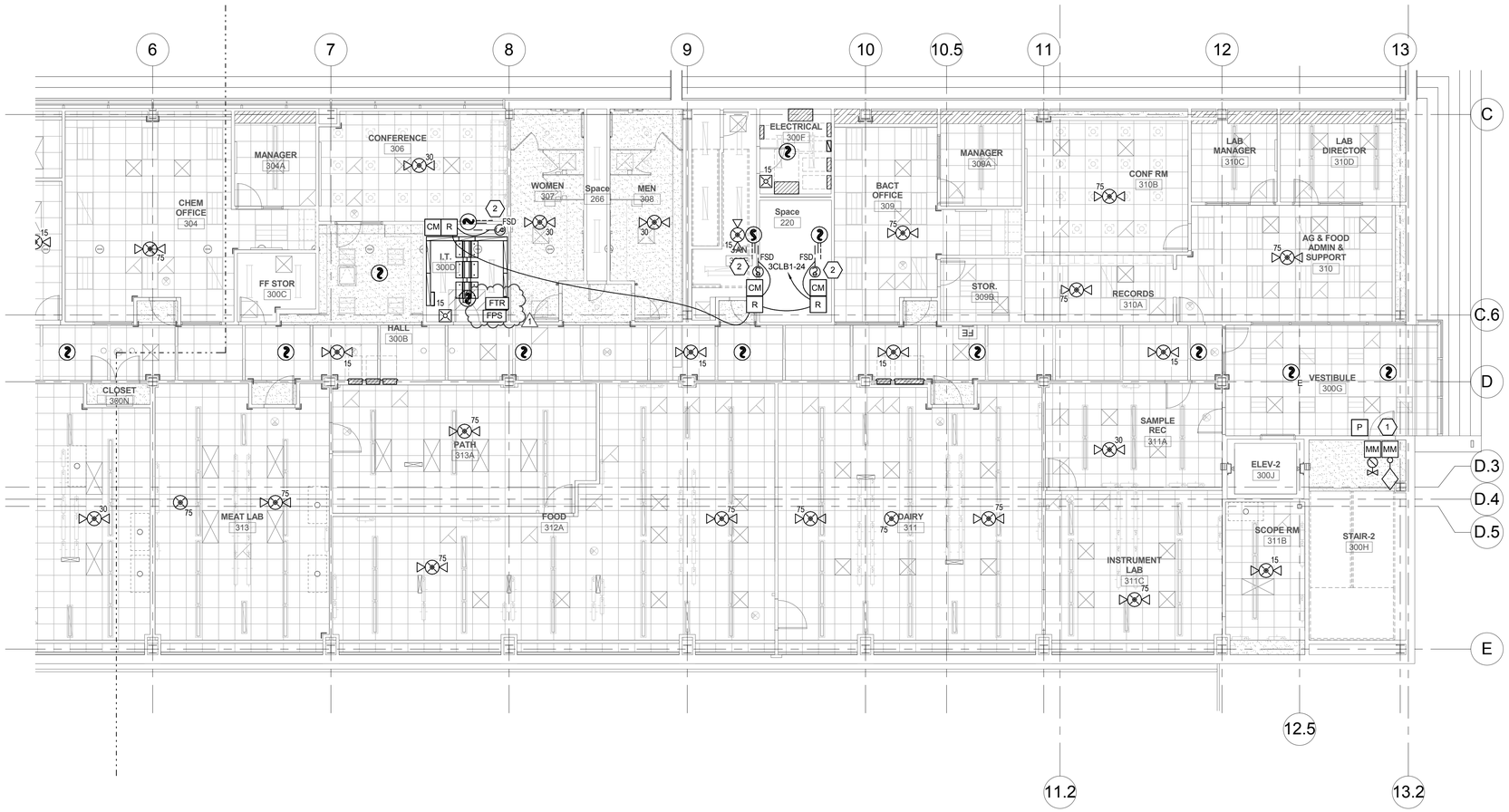

A1 THIRD LEVEL FIRE ALARM PLAN - AREA B

SCALE: 1/8" = 1'-0"

GENERAL SHEET NOTES

1. LOCATIONS OF DUCT SMOKE DETECTORS AND FIRE/SMOKE DAMPERS SHOWN ARE APPROXIMATE. COORDINATE EXACT QUANTITY AND LOCATIONS WITH MECHANICAL DRAWINGS PRIOR TO ROUGH-IN.
2. LOCATIONS OF FLOW, TAMPER AND OTHER FIRE SUPPRESSION MONITORING POINTS SHOWN ARE APPROXIMATE. FIELD VERIFY EXACT QUANTITY AND LOCATIONS WITH SPRINKLER CONTRACTOR PRIOR TO ROUGH-IN.

SHEET KEYNOTES

1. FLOOR CONTROL ASSEMBLY LOCATION.
2. INSTALL INDICATED DUCT DETECTOR WITHIN 5 FT OF FIRE / SMOKE DAMPER AT APPROXIMATE LOCATION INDICATED PER NFPA 72 REQUIREMENTS.

KEY PLAN

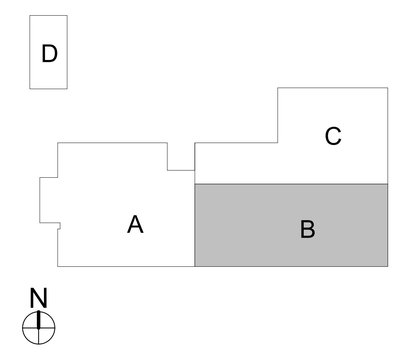

CRSA
649 E. South Temple
Salt Lake City, UT 84102
801.355.5915

MWL
11798 N. Lakeridge Pkwy.
Ashland, VA 23005
804-228-7473

State of Utah
Department of Administrative Services
Division of Facilities Construction & Management
4110 State Office Building
Salt Lake City, Utah 84114
Phone: (801) 538 - 3018
Fax: (801) 538 - 3267

DFCM APPROVAL STAMP

LICENSED PROFESSIONAL ENGINEER
No. 181563
DAVID E. WESEMANN
04-21-2014
STATE OF UTAH

ARCHITECT-ENGINEER STAMP

Unified State Laboratory Module 2

4451 South 2700 West, Taylorsville, UT 84118

DFCM #:	13020300
Project #:	B13-024

DATE:	ISSUE TYPE:
April 21, 2014	BID SET

MARK	DATE	DESCRIPTION
1	May 8, 2015	ADDENDUM #1

CHECKED BY	D. WESEMANN
DRAWN BY	DLM

THIRD LEVEL FIRE ALARM PLAN - AREA B

FA103b

VOLUME 2

C:\Users\dlm\Documents\2013\3362\Elec-Central_DLM (8432).rvt
5/7/2015 5:29:57 PM

GENERAL SHEET NOTES

1. LOCATIONS OF DUCT SMOKE DETECTORS AND FIRE/SMOKE DAMPERS SHOWN ARE APPROXIMATE. COORDINATE EXACT QUANTITY AND LOCATIONS WITH MECHANICAL DRAWINGS PRIOR TO ROUGH-IN.
2. LOCATIONS OF FLOW, TAMPER AND OTHER FIRE SUPPRESSION MONITORING POINTS SHOWN ARE APPROXIMATE. FIELD VERIFY EXACT QUANTITY AND LOCATIONS WITH SPRINKLER CONTRACTOR PRIOR TO ROUGH-IN.

SHEET KEYNOTES

1. CONTROL MODULES FOR ELEVATOR INTERFACE.
2. INSTALL INDICATED DUCT DETECTOR WITHIN 5 FT OF FIRE / SMOKE DAMPER AT APPROXIMATE LOCATION INDICATED PER NFPA 72 REQUIREMENTS.
3. FLOOR CONTROL ASSEMBLY LOCATION.

KEY PLAN

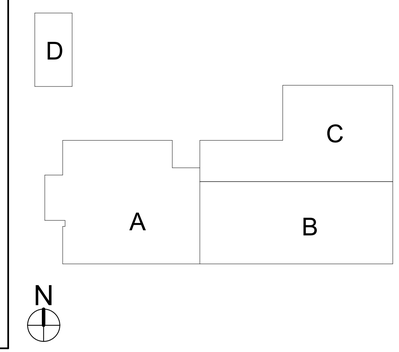

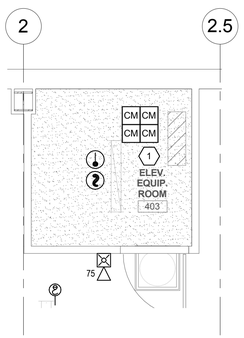

ENLARGED ELEV. EQUIP. 142 FIRE ALARM PLAN

C1 SCALE: 1/4" = 1'-0"

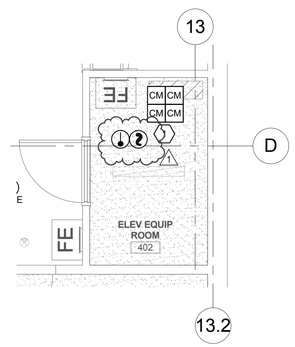

ENLARGED ELEV. EQUIP. 402 FIRE ALARM PLAN

C2 SCALE: 1/4" = 1'-0"

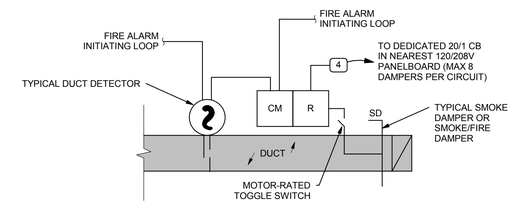

NOTES:

1. FOR EACH SMOKE DAMPER SHOWN ON PLANS, PROVIDE ALL DEVICES AND WIRING PER THIS DETAIL. THESE ARE NOT SHOWN ON PLANS FOR LEGIBILITY PURPOSES.
2. DUCT DETECTOR WITHIN 5' OF EVERY SMOKE DAMPER TO CLOSE DAMPER UPON ACTIVATION PER IMC REQUIREMENTS.
3. VERIFY QUANTITY AND LOCATIONS OF ALL SMOKE DAMPERS WITH THE HVAC INSTALLER.
4. PROVIDE ONE CONTROL MODULE PER SMOKE DAMPER, UNLESS THE REQUIRED CONTROL SEQUENCE ALLOWS GROUPING OF DAMPERS, IN WHICH CASE EACH GROUPING OF DAMPERS MAY SHARE ONE CONTROL MODULE.

TYPICAL SMOKE DAMPER FIRE ALARM DETAIL

C4 SCALE: NTS

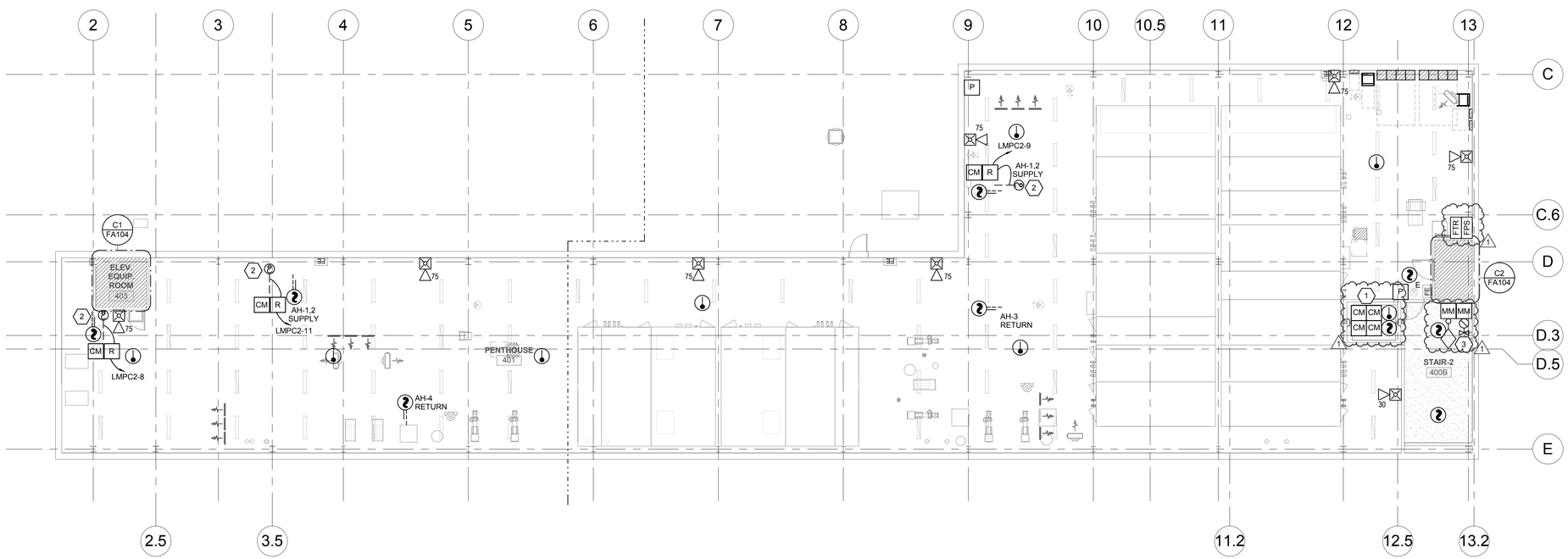

PENTHOUSE FIRE ALARM PLAN

A1 SCALE: 3/32" = 1'-0"

CRSA
649 E. South Temple
Salt Lake City, UT 84102
801.355.5915

MWL
11798 N. Lakeridge Pkwy.
Ashland, VA 23005
804-228-7473

State of Utah
Department of Administrative Services
Division of Facilities Construction & Management
4110 State Office Building
Salt Lake City, Utah 84114
Phone: (801) 538 - 3018
Fax: (801) 538 - 3267

DFCM APPROVAL STAMP

LICENSED PROFESSIONAL ENGINEER
No. 181563
DAVID E. WESEMANN
04-21-2014
STATE OF UTAH

ARCHITECT-ENGINEER STAMP

Unified State Laboratory Module 2

4451 South 2700 West, Taylorsville, UT 84118

DFCM #:	13020300
Project #:	B13-024

DATE:	ISSUE TYPE:
April 21, 2014	BID SET

MARK	DATE	DESCRIPTION
1	May 8, 2015	ADDENDUM #1

CHECKED BY	D. WESEMANN
DRAWN BY	DLM

PENTHOUSE LEVEL FIRE ALARM PLAN

FA104

VOLUME 2

C:\Users\dlm\Documents\20130326Elec-Central_DLM (8432).rvt
5/7/2015 5:30:05 PM

NOTIFICATION SCHEDULE

SYMBOL	STROBE SIZE	COVERAGE	AVERAGE CURRENT	MAXIMUM PER CIRCUIT ALONE
15	15 CD	20'x20'	.085A	17
30	30 CD	30'x30'	.135A	11
75	75 CD	40'x40'	.200A	7
110	110 CD	50'x50'	.225A	6

INDICATING LOOP LEGEND

INDICATING LOOP	DESCRIPTION
FI-1	FIRST LEVEL
FI-2	SECOND LEVEL
FI-3	THIRD LEVEL
FI-P	PENTHOUSE LEVEL

ADDRESSABLE LOOP LEGEND

INITIATING LOOP	DESCRIPTION
FI-1	FIRST LEVEL
FI-2	SECOND LEVEL
FI-3	THIRD LEVEL
FI-P	PENTHOUSE LEVEL

GENERAL SHEET NOTES

1. PLANS ARE BASED UPON 99 MONITOR AND CONTROL DEVICES PER ADDRESSABLE LOOP. OTHER CONFIGURATIONS ARE ACCEPTABLE SUBJECT TO CONTRACTOR ALLOWING FOR INCREASED WIRING REQUIREMENTS AND SUBMITTAL DRAWINGS SHOWING NEW WIRING CONFIGURATION. MAXIMUM INITIAL DEVICES PER LOOP SHALL NOT EXCEED 75% MAXIMUM ALLOWABLE.
2. PLANS ARE BASED UPON THE WIRING SCHEDULE SHOWN. WHERE MANUFACTURER'S REQUIREMENTS EXCEED REQUIREMENTS SHOWN, INCLUDE ADDITIONAL ASSOCIATED COSTS AND SUBMITTAL DRAWINGS INDICATING NEW WIRING CONFIGURATION.
3. PLANS ARE BASED UPON 2 AMPS AT 24 VDC, NOT TO EXCEED 75% (1.50 AMPS AVAILABLE), POWER SUPPLY CAPACITY PER NOTIFICATION CIRCUIT. NOTIFICATION DEVICE LOADS ARE BASED UPON NOTIFICATION DEVICE SCHEDULE SHOWN. INCLUDE ADDITIONAL ASSOCIATED COSTS FOR INCREASED WIRING AND POWER SUPPLY CAPACITY IF LOADS OF ACTUAL DEVICES PROVIDED EXCEED CIRCUIT CAPACITY, OR IF LOAD OUTPUT OF ACTUAL POWER SUPPLIES PROVIDED IS SIZED DIFFERENTLY. PROVIDE SUBMITTAL DRAWINGS SHOWING NEW WIRING CONFIGURATION.
4. FLOW AND TAMPER CONFIGURATION BASED UPON FIRE SPRINKLER DESIGN CONCEPT. FIELD VERIFY ACTUAL REQUIREMENTS. INCLUDE ANY ADDITIONAL MONITOR MODULES REQUIRED BY ACTUAL DESIGN REQUIREMENTS.
5. HEAT DETECTORS WHEN INSTALLED IN ELEVATOR SHAFTS OR MECHANICAL ROOMS FOR ELEVATOR SHUT DOWN SHALL HAVE HEAT DETECTOR WITH LOWER RESPONSE TIME INDEX THAN SPRINKLER HEAD.
6. PROVIDE POWER SUPPLY CAPACITY AS REQUIRED FOR DOOR HOLD OPENS SHOWN.
7. BATTERY CAPACITY TO BE ADEQUATE TO OPERATE 15 MINUTES AFTER 24 HOURS PLUS 25% SPARE CAPACITY.
8. VFD REQUIRES TWO RELAYS, ONE FOR SMOKE CONTROL, ONE SPARE.

GENERAL SHEET NOTES

9. RUN SPARE LOOPS IN SAME CONDUIT. DO NOT EXCEED 40% AREA FILL OF CONDUITS.
10. PROVIDE DUCT DETECTORS FOR SUPPLY AND RETURN AIR SYSTEMS OVER 2000 CFM. INSTALL DUCT DETECTORS PER NFPA 72 REQUIREMENTS AND PROVIDE ADDITIONAL DUCT DETECTORS DEPENDING UPON FINAL DUCT ARRANGEMENT.
11. PROVIDE DUCT DETECTOR AT EACH FLOOR, PRIOR TO CONNECTION TO A COMMON RETURN AND PRIOR TO RECIRCULATING OR FRESH AIR INLET IN AIR RETURN SYSTEMS OVER 15,000 CFM CAPACITY AND SERVING MORE THAN ONE STORY.
12. PROVIDE MANUAL PULL STATIONS IN BOILER ROOMS AND KITCHENS.
13. PROVIDE ONE YEAR OFF SITE MONITORING INCLUDING ALL INTERFACE DEVICES AND MONITORING CHARGES. COORDINATE WITH BUILDING OWNER'S OFF SITE MONITORING COMPANY.
14. LOCATE SMOKE DETECTORS MINIMUM 3' FROM AIR SUPPLY AND RETURN LOUVERS.
15. PROVIDE SYNCHRONIZED STROBES THROUGHOUT FACILITY. PROVIDE SYNCHRONIZATION MODULES PER MANUFACTURER'S REQUIREMENTS. INCLUDE ADDITIONAL WIRING, IF REQUIRED.
16. INITIATING AND INDICATING LOOPS SHALL NOT SERVE AN AREA OF GREATER THAN 22,500 SQUARE FEET. PROVIDE ADDITIONAL LOOPS FOR AREAS LARGER THAN THIS.
17. ALL OUTPUT DEVICES ARE DESIGNED ON SYSTEMS WITH 2 AMP POWER SUPPLY.
18. HORN/STROBE BASED ON 120 MILLIAMPS, DOOR HOLDERS BASED ON 70 MILLIAMPS.

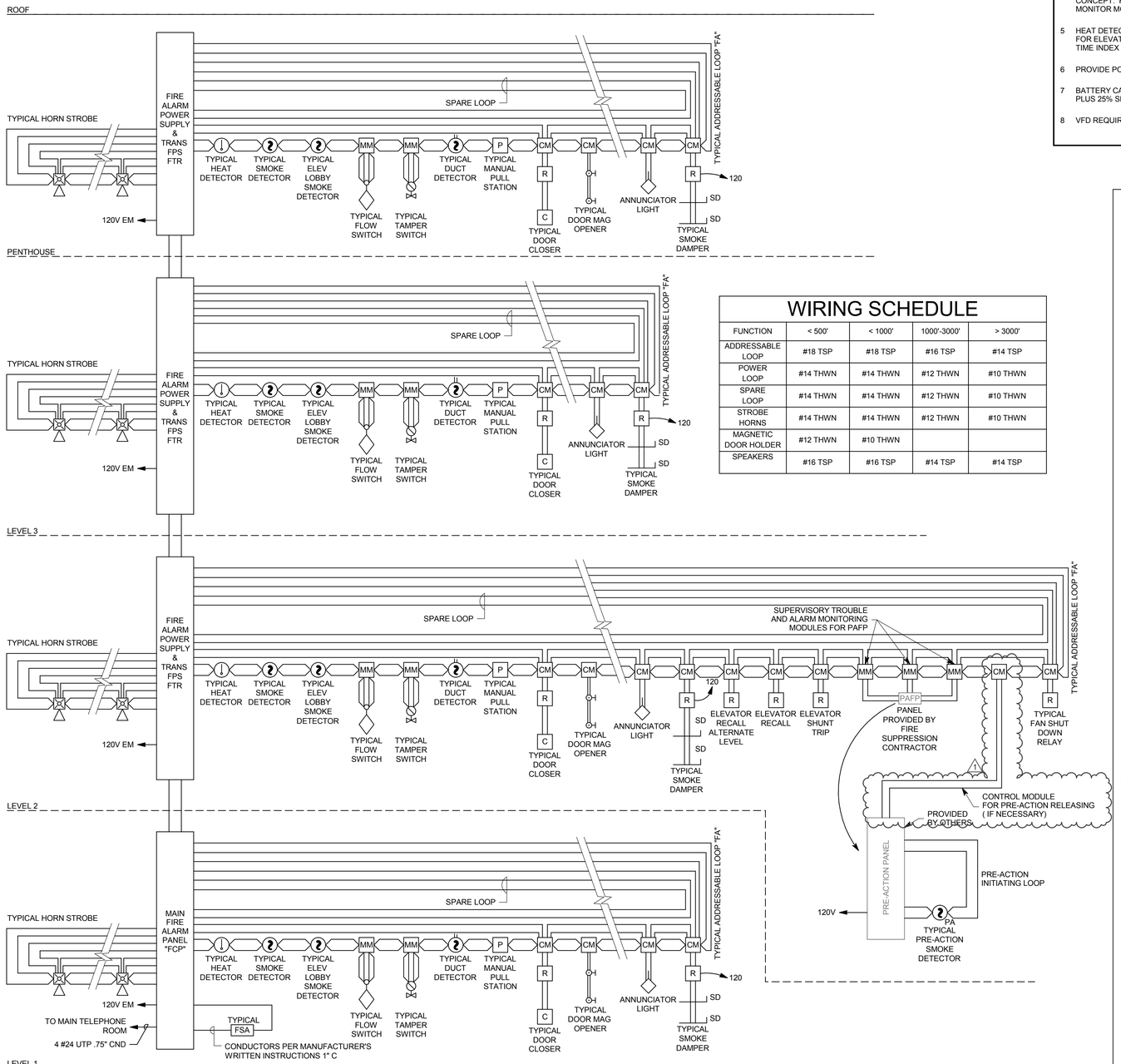

A1 FIRE ALARM RISER
SCALE: 1/8" = 1'-0"

WIRING SCHEDULE

FUNCTION	< 500'	< 1000'	1000'-3000'	> 3000'
ADDRESSABLE LOOP	#18 TSP	#18 TSP	#16 TSP	#14 TSP
POWER LOOP	#14 THWN	#14 THWN	#12 THWN	#10 THWN
SPARE LOOP	#14 THWN	#14 THWN	#12 THWN	#10 THWN
STROBE HORNS	#14 THWN	#14 THWN	#12 THWN	#10 THWN
MAGNETIC DOOR HOLDER	#12 THWN	#10 THWN		
SPEAKERS	#16 TSP	#16 TSP	#14 TSP	#14 TSP

FIRE ALARM INPUT/OUTPUT MATRIX

	ZONE	OUTPUT DEVICES: GENERAL ALARM	DOOR HOLDER/CLOSERS	ELEVATOR RECALL MAIN LEVEL	ELEVATOR RECALL ALTERNATE LEVEL	FAN SHUTDOWN	FIRE DAMPER	TROUBLE	SUPERVISORY	ELEVATOR SHUNT TRIP					NOTES
INITIATING DEVICES	1 MAIN FLOW	•	•			•	•								
	2 MAIN TAMPER							•							
	3 MAIN LEVEL FLOW	•	•			•	•								
	4 MAIN LEVEL TAMPER							•							
	5 2ND LEVEL FLOW	•	•			•	•								
	6 2ND LEVEL TAMPER							•							
	7 3RD LEVEL FLOW	•	•			•	•								
	8 3RD LEVEL TAMPER							•							
	9 PENTHOUSE FLOW	•	•			•	•								
	10 PENTHOUSE TAMPER							•							
	11 MAIN LEVEL INITIATING LOOP	•	•			•	•								
	12 MAIN LEVEL ELEVATOR DETECTOR	•	•		•	•	•								
	13 MAIN LEVEL DUCT DETECTOR					•			•						
	14 2ND LEVEL INITIATING LOOP	•	•			•	•								
	15 2ND LEVEL ELEVATOR DETECTOR	•	•	•		•	•								
	16 2ND LEVEL DUCT DETECTOR					•			•						
	17 3RD LEVEL INITIATING LOOP	•	•			•	•								
	18 3RD LEVEL ELEVATOR DETECTOR	•	•	•		•	•								
	19 3RD LEVEL DUCT DETECTOR					•			•						
	20 PENTHOUSE LEVEL INITIATING LOOP	•	•			•	•								
	21 PENTHOUSE LEVEL ELEVATOR DETECTOR	•	•	•		•	•								
	22 PENTHOUSE LEVEL DUCT DETECTOR					•			•						
	23 ELEVATOR SPRINKLER HEAT DETECTORS	•	•	•		•	•								
	24 PRE-ACTION ALARM	•	•	•		•	•			•					
	25 PRE-ACTION TROUBLE							•							
	26 PRE-ACTION SUPERVISORY								•						
	27														
	28														
	29														
	30														

CRSA
649 E. South Temple
Salt Lake City, UT 84102
801.355.5915

M1WL
11798 N. Lakeridge Pkwy.
Ashland, VA 23005
804-228-7473

State of Utah
Department of Administrative Services
Division of Facilities Construction & Management
4110 State Office Building
Salt Lake City, Utah 84114
Phone: (801) 538 - 3018
Fax: (801) 538 - 3267

DFCM APPROVAL STAMP

LICENSED PROFESSIONAL ENGINEER No. 181563 DAVID E. WESEMANN 04-21-2014 STATE OF UTAH

ARCHITECT-ENGINEER STAMP

Unified State Laboratory Module 2

4451 South 2700 West, Taylorsville, UT 84118

DFCM #: 13020300

Project #: B13-024

DATE:	ISSUE TYPE:
April 21, 2014	BID SET

MARK	DATE	DESCRIPTION
1	May 8, 2015	ADDENDUM #1

CHECKED BY: D. WESEMANN

DRAWN BY: DLM

FIRE ALARM RISER

FA601

VOLUME 2

C:\Users\dlm\Documents\2013035\Elec-Central_DLM (8432).rvt
5/7/2015 5:01:45 PM

UNIFIED STATE LABRATORY MODULE 2 - DISPLAY DEVICE SCHEDULE

ROOM NAME	ROOM #	FLOOR #	CEILING HEIGHT	DISPLAY TYPE	PROJECTED IMAGE HEIGHT	PROJECTED IMAGE WIDTH	APPROX. PROJECTOR THROW DISTANCE	FLAT PANEL DIAGONAL SIZE	ASPECT RATIO	COMMENTS
LOBBY	100A	1	10'-0"	FP (DS)				40"	16:9	FIXED MOUNT
MEETING 101	101	1	10'-0"	FP				46"	16:9	FIXED MOUNT
CONFERENCE ROOM	102F	1	10'-0"	PS	58"	104"	18'-0"		16:9	
HUDDLE	102H	1	10'-0"	FP				46"	16:9	FIXED MOUNT
TRAINING	111	1	10'-0"	FP				65"	16:9	FIXED MOUNT
SPEC PROC AUTOPSY	124A	1	10'-0"	FP				40"	16:9	SWING-ARM MOUNT
CONFERENCE	131	1	10'-0"	PS	58"	104"	18'-0"		16:9	
CONF	133	1	10'-0"	FP				46"	16:9	FIXED MOUNT
HUDDLE	134	1	10'-0"	FP				46"	16:9	FIXED MOUNT
FAMILY	135	1	10'-0"	FP				46"	16:9	FIXED MOUNT
FAMILY	136	1	10'-0"	FP				46"	16:9	FIXED MOUNT
AUTOPSY	124	1	10'-0"	FP				40"	16:9	SWING-ARM MOUNT
AUTOPSY	124	1	10'-0"	FP				40"	16:9	SWING-ARM MOUNT
AUTOPSY	124	1	10'-0"	FP				40"	16:9	SWING-ARM MOUNT
AUTOPSY	124	1	10'-0"	FP				40"	16:9	SWING-ARM MOUNT
AUTOPSY	124	1	10'-0"	FP				40"	16:9	SWING-ARM MOUNT
AUTOPSY	124	1	10'-0"	FP				40"	16:9	SWING-ARM MOUNT
NIGHT ROOM	117	1	10'-0"	FP				55"	16:9	SWING-ARM MOUNT
HALL	200	2	10'-0"	FP (DS)				48"	16:9	TOUCH MONITOR, FIXED PORTRAIT MOUNT
HALL	200	2	10'-0"	FP (DS)				48"	16:9	TOUCH MONITOR, FIXED PORTRAIT MOUNT
HALL	200	2	10'-0"	FP (DS)				48"	16:9	TOUCH MONITOR, FIXED PORTRAIT MOUNT
HALL	200	2	10'-0"	FP (DS)				48"	16:9	TOUCH MONITOR, FIXED PORTRAIT MOUNT
CONFERENCE	306	3	10'-0"	PS	52"	92"	14'-0"		16:9	
CONF RM	310B	3	10'-0"	PS	52"	92"	14'-0"		16:9	

PS = PROJECTION SCREEN, FP = FLAT PANEL MONITOR, FP (DS) = FLAT PANEL MONITOR (DIGITAL SIGNAGE)

AV SYSTEMS CABLE SCHEDULE

CABLE TYPE	DESCRIPTION	ACCEPTABLE TYPES	SPECIAL INSTRUCTIONS
L	LINE LEVEL CABLE, 22 AWG, SHIELDED, TWISTED PAIR W/ DRAIN	BELDEN 82761 LIBERTY 22-IP-CMP-EZ-WHY WEST PENN D25454	
S	SPEAKER CABLE, 70 V, 16 AWG, TWISTED PAIR	WEST PENN 25225 LIBERTY 16-2C-TTP	
C	CONTROL CABLE, 1 PAIR 18 AWG, 1 PAIR 22 AWG SHIELDED	CRESTRON CRESNET-NP BELDEN 1502R LIBERTY LLINX-U	
D	DATA CABLE, CATEGORY 6	BELDEN 2400 SERIES WEST PENN 254246	
P	DIGITAL VIDEO CABLE, TWISTED PAIR, SHIELDED	EXTRON XTP DTP 24	
H	HDMI CABLE	BELDEN HD200X LIBERTY E-HDM-M-X	X=LENGTH NEEDED NOTE 22
R	VGA CABLE - MINI, HIGH-RESOLUTION	EXTRON MHR-5 BELDEN 1279R	

AV SYSTEM CABLE INSTALLATION REQUIREMENTS SCHEDULE

ORIGIN	DESTINATION	CABLE TYPE	QUANTITY	SPECIAL INSTRUCTIONS
CP1	MXX	H	1	
		R	1	
		L	2	
BP	MXX	D	1	
		C	1	
		S	1	USE 'S' CABLE FOR POWER
M46 NIGHT ROOM	VIC M	S	1	USE 'S' CABLE FOR POWER
VIC M	VIC S	D	1	
VIC M	VIC P	S	1	
FBAV	ER	P	2	
		S	2	USE 'S' CABLE FOR POWER
TP	ER	D	1	
	ER	P	1	
	ER	C	1	
	SC	C	1	
S	ER	S	1	CIRCUIT TO ALL SPEAKERS, SEE PLANS FOR ROUTING

CABLE INSTALLATION REQUIREMENTS APPLY TO EVERY DEVICE LOCATION SHOWN IN EVERY ROOM. ER = EQUIPMENT RACK

AUDIO-VIDEO SHEET INDEX

SHEET NO	SHEET TITLE
TA001	AUDIO-VIDEO SYSTEM SHEET INDEX AND SCHEDULES
TA002	AUDIO-VIDEO SYSTEM EQUIPMENT LIST
TA501	AUDIO-VIDEO SYSTEM DETAILS
TA601	AUDIO-VIDEO SYSTEM DIAGRAMS

DEFINITIONS

NOTE: ALL DEFINITIONS MAY NOT BE USED.

INDICATED: THE TERM "INDICATED" REFERS TO GRAPHIC REPRESENTATIONS, NOTES, OR SCHEDULES ON THE DRAWINGS, OTHER PARAGRAPHS OR SCHEDULES IN THE SPECIFICATIONS, AND SIMILAR REQUIREMENTS IN THE CONTRACT DOCUMENTS. WHERE TERMS SUCH AS "SHOWN", "NOTED", "SCHEDULED", AND "SPECIFIED" ARE USED, IT IS TO HELP THE READER LOCATE THE REFERENCE, NO LIMITATION ON LOCATION IS INTENDED.

DIRECTED: TERMS SUCH AS "DIRECTED", "REQUESTED", AUTHORIZED", "SELECTED", "APPROVED", "REQUIRED", AND "PERMITTED" MEAN "DIRECTED BY THE ENGINEER", "REQUESTED BY THE ENGINEER", AND SIMILAR PHRASES.

APPROVE: THE TERM "APPROVED", WHERE USED IN CONJUNCTION WITH THE ENGINEER'S ACTION ON THE CONTRACTOR'S SUBMITTALS, APPLICATIONS, AND REQUESTS, IS LIMITED TO THE ENGINEER'S DUTIES AND RESPONSIBILITIES AS STATED IN GENERAL AND SUPPLEMENTARY CONDITIONS.

FURNISH: THE TERM "FURNISH" IS USED TO MEAN "SUPPLY AND DELIVER TO THE PROJECT SITE, READY FOR UNLOADING, UNPACKING, ASSEMBLY, INSTALLATION, AND SIMILAR OPERATIONS."

INSTALL: THE TERM "INSTALL" IS USED TO DESCRIBE OPERATIONS AT PROJECT SITE INCLUDING THE ACTUAL "UNLOADING, UNPACKING, ASSEMBLY, ERECTION, PLACING, ANCHORING, APPLYING, WORKING TO DIMENSION, FINISHING, CURING, PROTECTING, CLEANING, AND SIMILAR OPERATIONS."

PROVIDE: THE TERM "PROVIDE" MEANS "TO FURNISH AND INSTALL, COMPLETE AND READY FOR THE INTENDED USE."

INSTALLER: AN "INSTALLER" IS THE CONTRACTOR OR AN ENTITY ENGAGED BY THE CONTRACTOR, EITHER AS AN EMPLOYEE, SUBCONTRACTOR, OR SUB-SUBCONTRACTOR, FOR PERFORMANCE OF A PARTICULAR CONSTRUCTION ACTIVITY, INCLUDING INSTALLATION, ERECTION, APPLICATION, AND SIMILAR OPERATIONS. INSTALLERS ARE REQUIRED TO BE EXPERIENCED IN THE OPERATIONS THEY ARE ENGAGED TO PERFORM.

TECHNOLOGY SYSTEMS: THE TERM "TECHNOLOGY SYSTEMS" IS USED TO DESCRIBE ALL LOW VOLTAGE SYSTEMS GENERALLY REFERRED TO AS "SPECIAL SYSTEMS". THESE SYSTEMS INCLUDE BUT ARE NOT NECESSARILY LIMITED TO ALL SYSTEMS WHICH UTILIZE VOLTAGES OF LESS THAN 71 VOLTS SUCH AS SOUND SYSTEMS, VIDEO SYSTEMS, TV SYSTEMS, SECURITY SYSTEMS, VOICE AND DATA CABLING SYSTEMS, ETC...

ABBREVIATIONS

NOTE: ALL ABBREVIATIONS MAY NOT BE USED.

"A"	AMP OR AMPS	"IG"	INSULATED GROUND
"ADJ"	ADJACENT	"IMC"	INTERMEDIATE METAL CONDUIT
"AFF"	ABOVE FINISHED FLOOR	"IN/IS"	INSULATED/ISOLATED
"AL"	ALUMINUM	"KVA"	KILO VOLT AMPERES
"C"	CONDUIT	"KW"	KILOWATTS
"CB","C/B"	CIRCUIT BREAKER	"LFMC"	LIQUID TIGHT FLEXIBLE METAL CONDUIT
"CKT"	CIRCUIT		
"CO"	CONVENIENCE OUTLET	"LFNC"	LIQUID TIGHT FLEXIBLE NONMETALLIC CONDUIT
"C.O.R."	CONTRACTING OFFICER'S REPRESENTATIVE	"MCA"	MINIMUM CIRCUIT AMPS
		"MLO"	MAIN LUGS ONLY
"CU"	COPPER	"N.C."	NORMALLY CLOSED
"EA"	EACH	"N.I.C."	NOT IN CONTRACT
"ELEC"	ELECTRICAL	"N.O."	NORMALLY OPEN
"EM"	EMERGENCY	"O.C."	ON CENTER
"EMT"	ELECTRICAL METALLIC TUBING	"OCP"	OVER CURRENT PROTECTION
"ENT"	ELECTRICAL NONMETALLIC TUBING	"QTY"	QUANTITY
"EQUIP"	EQUIPMENT	"R"	REMOVE
"EX"	EXISTING	"RMC"	RIGID METAL CONDUIT
"FA"	FIRE ALARM	"RNC"	RIGID NONMETALLIC CONDUIT
"FACP"	FIRE ALARM CONTROL PANEL	"RR"	REMOVE AND RELOCATE
"FLA"	FULL LOAD AMPS	"TYP"	TYPICAL
"FMC"	FLEXIBLE METAL CONDUIT	"UF"	UNDER FLOOR
"F.O.B."	FREIGHT ON BOARD	"UG"	UNDER GROUND
"GFI"	GROUND FAULT INTERRUPTER	"W/"	WITH
"GR"	GROUND	"WP"	WEATHER PROOF
"HOA"	HAND-OFF-AUTO	"XFMR"	TRANSFORMER
"HP"	HORSE POWER		

AV SIGNAL ABBREVIATIONS

"AL"	AUDIO, LEFT (LINE LEVEL)	"XGA/VGA"	EXTENDED GRAPHICS ARRAY/VIDEO GRAPHICS ARRAY-HIGH RESOLUTION ANALOG VIDEO
"AR"	AUDIO, RIGHT (LINE LEVEL)		
"AA"	ANALOG AUDIO		
"F"	OPTICAL FIBER	"DVI"	DIGITAL VIDEO INTERFACE-HIGH RESOLUTION DIGITAL VIDEO
"V"	VIDEO, COMPOSITE-STANDARD RESOLUTION ANALOG VIDEO		
"YC"	S-VIDEO-STANDARD RESOLUTION ANALOG VIDEO	"HDMI"	HIGH DEFINITION MULTIMEDIA INTERFACE-HIGH RESOLUTION DIGITAL VIDEO
"YUC"	COMPONENT VIDEO-STANDARD RESOLUTION ANALOG VIDEO	"DP"	DISPLAY PORT-HIGH RESOLUTION DIGITAL VIDEO
"RGBHV"	RED, GREEN, BLUE, HORIZONTAL & VERTICAL SYNC-HIGH RESOLUTION ANALOG VIDEO	"TP"	TWISTED PAIR
		"IP"	INTERNET PROTOCOL
		"SDI"	SERIAL DIGITAL INTERFACE

SPECIAL PROJECT NOTE

1. THE AUDIO AND VIDEO SYSTEM EQUIPMENT LIST IDENTIFIES EQUIPMENT ITEMS OF SIGNIFICANCE BY MANUFACTURER AND MODEL NUMBER. THE SOLE PURPOSE FOR THIS IS TO ESTABLISH LEVELS OF QUALITY AND INDIVIDUAL COMPONENT CAPABILITY FOR ALL EQUIPMENT ITEMS. IT IS NOT THE INTENT OF THE AUDIO AND VIDEO SYSTEM EQUIPMENT LIST TO PRECLUDE THE INSTALLATION OF EQUIPMENT ITEMS FABRICATED BY MANUFACTURERS OTHER THAN THOSE LISTED, SO FAR AS THEY ARE JUDGED TO BE EQUAL TO THOSE EQUIPMENT ITEMS IDENTIFIED IN THE LIST. IF BIDDERS WISH TO FURNISH AND INSTALL ITEMS OTHER THAN THOSE IDENTIFIED IN THE AUDIO AND VIDEO SYSTEM EQUIPMENT LIST APPROVAL MUST BE OBTAINED DURING THE BIDDING PROCESS. THE BIDDER IS RESPONSIBLE FOR PROVIDING SUFFICIENT EVIDENCE THAT THE SUBSTITUTED EQUIPMENT IS EQUAL TO, OR BETTER THAN, THE LISTED EQUIPMENT. IN ADDITION, THE BIDDER IS RESPONSIBLE TO MAKE ALL CHANGES TO THE DESIGN NECESSITATED BY THE SUBSTITUTED EQUIPMENT WITH NO CHANGE IN PROJECT COST DURING CONSTRUCTION. FINAL DECISIONS REGARDING ALL EQUIPMENT SUBSTITUTION REQUESTS WILL BE MADE BY THE OWNER AND SYSTEM DESIGNER.

GENERAL AUDIO-VIDEO NOTES

1. CONDUCT AN RF FREQUENCY AUDIT OF THE SITE PRIOR TO SELECTION OF WIRELESS RF OPERATING FREQUENCIES. SELECT FREQUENCIES TO ASSURE INTERFERENCE FREE OPERATION. INSTALL ANTENNAS/TRANCEIVERS OUTSIDE OF THE EQUIPMENT RACK, AT AN ARCHITECT APPROVED LOCATION, WHERE THE BEST SYSTEM PERFORMANCE IS ACHIEVED.
2. FILL ALL UNUSED RACK SPACE WITH BLANK/VENT PANELS.
3. INSTALL/SUSPEND ALL EQUIPMENT IN COMPLIANCE WITH THE MANUFACTURERS WRITTEN INSTRUCTIONS, SEISMIC SPECIFICATION SECTION, AND INDUSTRY WIDE ACCEPTED RIGGING PRACTICES. SUPPORT EQUIPMENT WEIGHT FROM STRUCTURE ABOVE CEILINGS. DURING THE SUBMITTAL PROCESS, PROVIDE SHOP DRAWINGS WHICH DETAIL PROPOSED MOUNTING FOR ALL SUCH EQUIPMENT.
4. PROVIDE MANUFACTURER RECOMMENDED POWER SUPPLIES AND/OR TRANSFORMERS FOR ALL SPECIFIED EQUIPMENT.
5. FURNISH AND INSTALL ALL CABLE AND CONNECTORS REQUIRED FOR ALL AUDIO AND VIDEO SYSTEMS TO COMPLETE MANUFACTURER RECOMMENDED CABLE TO EQUIPMENT TERMINATION TO FORM A COMPLETE AND FULLY FUNCTIONAL SYSTEM AS SHOWN. SELECT CONNECTORS WHICH PASS FULL BANDWIDTH CAPABILITY OF SPECIFIED CABLE. PROVIDE CABLE TYPES AS IDENTIFIED IN THE AUDIO/VIDEO CABLE SCHEDULE.
6. PROVIDE PATCH CABLES TO FULLY INTERCONNECT ALL SPECIFIED AND/OR OWNER FURNISHED EQUIPMENT WITH THE SPECIFIED CONNECTION PANELS, SYSTEM INTERFACES, AND MISCELLANEOUS EQUIPMENT.
7. PROVIDE MANUFACTURER RECOMMENDED, AND INDUSTRY STANDARD, SIGNAL LEVELS AND COMMUNICATION PROTOCOLS THROUGHOUT ENTIRE SYSTEM REGARDLESS OF CABLE LENGTHS. PROVIDE ALL REQUIRED DISTRIBUTION AND PROCESSING EQUIPMENT, INCLUDING BUT NOT LIMITED TO SIGNAL DISTRIBUTION AMPLIFIERS, LINE AMPLIFIERS, LINE DRIVERS, EQUALIZING AMPLIFIERS, GROUND/HUM ISOLATORS, MATCHING/ISOLATION TRANSFORMERS, CONTROL BUS DEVICES, COMMUNICATIONS CONVERTERS, ETC..., WHETHER SHOWN IN THE SINGLE LINE DIAGRAMS OR NOT.
8. PROVIDE PRE-MANUFACTURED ADAPTER CABLES WHERE REQUIRED FOR MATING CABLE TO CONNECTORS. THESE WILL INCLUDE, BUT ARE NOT LIMITED TO, ADAPTERS WHICH MATE DVI TO HDMI, STEREO AUDIO TO MONO AUDIO, RGBHV CABLE TO 15 PIN HD CONNECTORS, TWO VIDEO CABLES TO 4 PIN DIN CONNECTORS, AND OTHER SIMILAR TERMINATION AND MATING REQUIREMENTS.
9. PROVIDE RACK MOUNT KITS FOR ALL RACK MOUNTED EQUIPMENT. WHERE MANUFACTURERS DO NOT PROVIDE RACK MOUNT KITS, PROVIDE CUSTOM RACK MOUNT KITS AS SPECIFIED.
10. WHERE ANY CABLE IS INSTALLED IN A FASHION WHERE EXPOSED TO PUBLIC VIEW, INSTALL CABLE INSIDE THE SPECIFIED BRAIDED EXPANDABLE SLEEVING. EXAMPLES OF SUCH LOCATIONS INCLUDE, BUT ARE NOT LIMITED TO EQUIPMENT ITEMS ON TABLES AND CEILING MOUNTED PROJECTORS.
11. PROVIDE PERMANENT, MECHANICALLY PRODUCED LABELS ON ALL CABLES AT CONNECTORS AND TERMINATION POINTS.
12. CONTROL SPECIFIED DEVICES UTILIZING THE MOST SOPHISTICATED COMMUNICATIONS PROTOCOL AVAILABLE ON THE DEVICE TO BE CONTROLLED. ALWAYS USE RS-232 OR ETHERNET WHEN AVAILABLE.
13. COVER JUNCTION BOXES WITH NO SPECIFIED AV DEVICES WITH BLANK NYLON COVER PLATE. COLOR TO MATCH ELECTRICAL DEVICES.
14. CONNECT ALL SPECIFIED AV EQUIPMENT TO 120 VAC VIA A SPECIFIED TRANSIENT VOLTAGE SURGE SUPPRESSOR INCLUDING ALL MONITORS AND PROJECTORS.
15. SET EDID EMULATORS FOR ALL EDID CAPABLE DEVICES TO A RESOLUTION DESIGNATED BY THE OWNER/DESIGNER DURING THE SYSTEM COMMISSIONING PROCESS.
16. SET EDID EMULATOR FOR ALL DIGITAL VIDEO TRANSMITTERS TO 2-CHANNEL AUDIO.
17. SET ALL PLAYBACK DEVICES (DVD, TUNERS, ETC...) TO RGB COLOR SPACE.
18. PROVIDE THE PLENUM RATED EQUIVALENT CABLE IF CABLE IS INSTALLED IN AN AIR PLENUM.
19. VERY CAREFULLY SUPPORT THE WEIGHT OF ALL HDMI CABLES CONNECTED TO RACK MOUNTED EQUIPMENT USING LOCKIT CABLE LACING BRACKETS AND RACK MOUNTED LACING BARS. PROFESSIONALLY DRESS, LACE, AND STRAIN RELIEF CABLES SO THAT NO WEIGHT FROM INDIVIDUAL HDMI CABLES IS TRANSFERRED TO INDIVIDUAL HDMI CONNECTORS.INSTALL THE SPECIFIED HDMI CABLE LACING BRACKETS ON ALL HDMI CONNECTORS IN COMPLIANCE WITH THE MANUFACTURER'S WRITTEN INSTRUCTIONS.
20. REFER TO EJ SHEETS FOR DEVICE QUANTITIES AND LOCATIONS.

CRSA

649 E. South Temple
Salt Lake City, UT 84102
801.355.5915

MWL

11798 N. Lakeridge Pkwy.
Ashland, VA 23005
804-228-7473

State of Utah
Department of Administrative Services
Division of Facilities Construction & Management
4110 State Office Building
Salt Lake City, Utah 84114
Phone: (801) 538 - 3018
Fax: (801) 538 - 3267

DFCM APPROVAL STAMP

LICENSED PROFESSIONAL ENGINEER
No. 181563
DAVID E. WESEMANN
04-21-2014
STATE OF UTAH

ARCHITECT-ENGINEER STAMP

Unified State Laboratory Module 2

4451 South 2700 West, Taylorsville, UT 84118

DFCM #: 13020300

Project #: B13-024

DATE:	ISSUE TYPE:
April 21, 2014	BID SET

MARK	DATE	DESCRIPTION
1	May 8, 2015	ADDENDUM #1

CHECKED BY	AWA
DRAWN BY	SJT

AUDIO-VIDEO SYSTEM SHEET INDEX AND SCHEDULES

TA001

VOLUME 2

C:\Users\dlm\Documents\20130502Elec-Central_DLM (8432).rvt
5/4/2015 1:12:48 PM

AUDIO-VIDEO SYSTEM EQUIPMENT LIST

THE ITEMS INDICATED BELOW SHALL NOT BE CONSTRUED AS A "BILL OF MATERIALS". THIS LIST IDENTIFIES ITEMS OF SIGNIFICANCE USED DURING THE DESIGN OF THE ELECTRONIC SYSTEMS INSTALLATION. WHERE THE ITEMS INDICATED ARE ONE PORTION OF AN ASSEMBLY, THE ENTIRE ASSEMBLY SHALL BE PROVIDED UNLESS SPECIFIED OTHERWISE. PROVIDE ALL MISCELLANEOUS HARDWARE AND SUPPORTS WHICH MAY NOT BE LISTED HERE, FOR A COMPLETE INSTALLATION. COMPARE CATALOG NUMBERS WITH DESCRIPTIONS AND NOTIFY ENGINEER OF DISCREPANCIES PRIOR TO BID. IF CATALOG NUMBERS DO NOT MATCH DESCRIPTIONS, THE DESCRIPTIONS TAKE PRECEDENCE. PROVIDE COMPLETE SUBMITTAL FOR APPROVAL PRIOR TO PURCHASING ANY EQUIPMENT OR CABLE. REFER TO SPECIFICATIONS FOR ADDITIONAL REQUIREMENTS.

SYMBOL	DESCRIPTION	QTY	ACCEPTABLE TYPE
BP PS	WALL CONTROLLER, BUTTON PANEL W/ VOLUME CONTROL AND POWER SUPPLY, LABEL PER DETAIL, COORDINATE COLOR WITH ARCHITECT	OFP	CRESTRON MPC-M10 WITH PW-2407RU
TP	TOUCH SCREEN CONTROL PANEL, 10", PoE	OFP	CRESTRON TSW-1050
PoEI	PoE INJECTOR	OFP	CRESTRON PWE-4803RU
DRX	TWISTED PAIR DIGITAL VIDEO RECEIVER, HDMI OUT W/ SCALER AND MOUNTING HARDWARE	OFP	CRESTRON DM-RMC-SCALER-C
DPS	DIGITAL VIDEO PRESENTATION SWITCHER, 7X4 W/ INTEGRATED CONTROL SYSTEM, AUDIO DSP, AND AMPLIFIER	OFP	CRESTRON DMPS3-300-C
CP1	CONNECTION PANEL #1, 2-GANG PLATE W/ SPECIFIED MODULES	OFP	CUSTOM, SEE DETAIL
CP2	CONNECTION PANEL #2	OFP	EXTRON CABLE CUBBY 700 W/ CABLES AND RETRACTORS AS DETAILED
CP3	CONNECTION PANEL #3, W/ CONNECTORS AS DETAILED	OFP	CUSTOM, SEE DETAIL
FBAV	FLOOR BOX MOUNTED CONNECTION PANEL	OFP	CUSTOM, SEE DETAIL, W/ CRESTRON DM-TX-201-C-2G
PTAV	POKE-THRU MOUNTED CONNECTION PANEL	OFP	CUSTOM, SEE DETAIL, W/ CRESTRON DM-TX-201-C-2G
TUN	RF TUNER, DIGITAL, W/ HDMI OUTPUT, OWNER FURNISHED	OFCI	
DVD	DVD PLAYER, RACK MOUNTED	OFP	OPPO BDP-103 W/ RACK MOUNT KIT
	PROJECTOR LED/LASER LIGHT SOURCE, W/ LENS, 16:9 ASPECT RATIO, 1920x1080 NATIVE RESOLUTION, 3500 ANSI LUMENS AND SOFTWARE	OFP	PANASONIC PT-RZ370
	PROJECTOR CEILING MOUNT KIT, PROVIDE PIPE, COUPLERS, STEEL, ADAPTORS, UNISTRUT, THREADED ROD, FASTENERS, ANCHORS, AND ANY OTHER REQUIRED COMPONENTS TO SPAN STRUCTURE, AIR DUCTS, EXTEND/ REDUCE SUPPORT SYSTEM FOR APPROPRIATE ELEVATION AS NEEDED FOR INSTALLATION OF THE SPECIFIES DEVICE. SECURE PROJECTORS TO MOUNTS UTILIZING SECURITY SCREWS.	OFP	CHIEF RPAU AND ALL REQUIRED ACCESSORIES
SC	PROJECTION SCREEN WITH LOW VOLTAGE CONTROL INTERFACE, CONTROL SWITCH	OFP	FURNISHED AND INSTALLED BY ELECTRICAL CONTRACTOR
M65	FLAT PANEL DISPLAY, 65", LCD, 1080P W/ RS-232 CONTROL	OFP	SAMSUNG HG65NC890XFXZA
	WALL MOUNT BRACKET W/ ALL REQUIRED ACCESSORIES	OFP	CHIEF LSMD
M46	FLAT PANEL DISPLAY, 46", LCD, 1080P W/ RS-232 CONTROL	OFP	SAMSUNG HG46NC890XFXZA
	WALL MOUNT BRACKET W/ ALL REQUIRED ACCESSORIES	OFP	CHIEF LSMD
	WALL MOUNT BRACKET, SWING-ARM	1	CHIEF TS525TU
M40	FLAT PANEL DISPLAY, 40" DIAGONAL W/ ETHERNET CONTROL AND SIGNAGE SOFTWARE	OFP	SAMSUNG DM40D
	WALL MOUNT BRACKET, FIXED	1	PREMIER MOUNTS P4263FP
	WALL MOUNT BRACKET, SWING-ARM	OFP	CHIEF TS525TU
TM48	FLAT PANEL DISPLAY W/ TOUCH OVERLAY	OFP	SAMSUNG DM48D W/ CY-TD48LDAH
	WALL MOUNT BRACKET, FIXED	OFP	PREMIER MOUNTS P4263FP
WVR	WIRELESS VIDEO PRESENTATION SYSTEM	OFP	CRESTRON AIR MEDIA AM-100

A/R = AS REQUIRED, OFP = OBTAIN FROM PLANS
OFCI = OWNER FURNISHED, CONTRACTOR INSTALLED

AUDIO-VIDEO SYSTEM EQUIPMENT LIST (CON'T)

THE ITEMS INDICATED BELOW SHALL NOT BE CONSTRUED AS A "BILL OF MATERIALS". THIS LIST IDENTIFIES ITEMS OF SIGNIFICANCE USED DURING THE DESIGN OF THE ELECTRONIC SYSTEMS INSTALLATION. WHERE THE ITEMS INDICATED ARE ONE PORTION OF AN ASSEMBLY, THE ENTIRE ASSEMBLY SHALL BE PROVIDED UNLESS SPECIFIED OTHERWISE. PROVIDE ALL MISCELLANEOUS HARDWARE AND SUPPORTS WHICH MAY NOT BE LISTED HERE, FOR A COMPLETE INSTALLATION. COMPARE CATALOG NUMBERS WITH DESCRIPTIONS AND NOTIFY ENGINEER OF DISCREPANCIES PRIOR TO BID. IF CATALOG NUMBERS DO NOT MATCH DESCRIPTIONS, THE DESCRIPTIONS TAKE PRECEDENCE. PROVIDE COMPLETE SUBMITTAL FOR APPROVAL PRIOR TO PURCHASING ANY EQUIPMENT OR CABLE. REFER TO SPECIFICATIONS FOR ADDITIONAL REQUIREMENTS.

SYMBOL	DESCRIPTION	QTY	ACCEPTABLE TYPE
S	SPEAKER, 6", CEILING MOUNTED W/ GRILLE	OFP	COMMUNITY D6
ALS	ASSISTED LISTENING SYSTEM, PORTABLE	OFP	LISTEN LS-ADA
	EAR SPEAKER	2	LISTEN LA-164
1	EQUIPMENT RACK #1, WALL MOUNTED, 24RU	OFP	MIDDLE ATLANTIC DWR-24-17, W/FD-24
C	EQUIPMENT RACK #C, CREDENZA MOUNTED W/ INTEGRATED FAN	OFP	MIDDLE ATLANTIC SRSR-4-15 W/ FTA-3
DRAWER	2 RU RACK MOUNT DRAWER	A/R	MIDDLE ATLANTIC D2 IN EACH RACK
	PTZ DOME NETWORK CAMERA, CEILING MOUNTED, 720p, H.264, PoE, W/ MEMORY CARD	OFP	AXIS M5014-V W/ AXIS CAMERA COMPANION SOFTWARE
VIC M	VIDEO INTERCOM MASTER STATION, TOUCH SCREEN	OFP	AIPHONE JM-4MED
VIC S	VIDEO INTERCOM SLAVE STATION, TOUCH SCREEN	OFP	AIPHONE JM-4HD
VIC P	VIDEO INTERCOM DOOR STATION, W/ PTZ CAMERA	OFP	AIPHONE JK-DVF W/ SBX-DVF WEATHERPROOF INSTALLATION
IPS	INTERCOM POWER SUPPLY, 24 VDC, 2 AMP	OFP	AIPHONE PS-2420UL
TVSS	TRANSIENT VOLTAGE SURGE SUPPRESSOR, 8 AMP, FLAT PANEL MONITORS AND PROJECTOR	OFP	TRIPPLITE ISOBAR 6 ULTRA
TVSS	TRANSIENT VOLTAGE SURGE SUPPRESSOR, 20 AMP, RACK MOUNT	OFP	TRIPP LITE IBAR12-20ULTRA
S(X)	SPEAKER CABLE, (X) INDICATES NUMBER, IF MORE THAN ONE	A/R	SEE CABLE SCHEDULE, SHEET TA001
	RF CONNECTION		PREVIOUSLY INSTALLED
	CONNECTORS, SEE NOTE 5	A/R	
	POWER SUPPLIES, MISC. TRANSFORMERS, SIGNAL SENSORS, PROTOCOL CONVERTORS, SEE NOTES 4, 7, 8	A/R	
	PATCH CORDS, SEE NOTE 6	A/R	
	ADAPTER CABLES, SEE NOTE 9	A/R	
	CABLE, SEE AUDIO-VIDEO SYSTEMS CABLE SCHEDULE	A/R	
	HDMI CONNECTOR SUPPORT BRACKETS, NOTE 20	A/R	EXTRON LOCKIT
	NYLON BRAIDED EXPANDABLE SLEEVING	A/R	TECH FLEX FLEXO PET

A/R = AS REQUIRED, OFP = OBTAIN FROM PLANS
OFCI = OWNER FURNISHED, CONTRACTOR INSTALLED

CRSA
649 E. South Temple
Salt Lake City, UT 84102
801.355.5915

MWL
11798 N. Lakeridge Pkwy.
Ashland, VA 23005
804-228-7473

State of Utah
Department of Administrative Services
DFCM
Division of Facilities Construction & Management
4110 State Office Building
Salt Lake City, Utah 84114
Phone: (801) 538 - 3018
Fax: (801) 538 - 3267

DFCM APPROVAL STAMP

LICENSED PROFESSIONAL ENGINEER
No. 181563
DAVID E. WESEMANN
04-21-2014
STATE OF UTAH

ARCHITECT-ENGINEER STAMP

Unified State Laboratory Module 2

4451 South 2700 West, Taylorsville, UT 84118

DFCM #: 13020300

Project #: B13-024

DATE:	ISSUE TYPE:
April 21, 2014	BID SET

MARK	DATE	DESCRIPTION
1	May 8, 2015	ADDENDUM #1

CHECKED BY	AWA
DRAWN BY	SJT

AUDIO-VIDEO SYSTEM EQUIPMENT LIST

TA002

VOLUME 2

C:\Users\dlm\Documents\2013\3502\Elec-Central_DLM (8432).rvt
5/4/2015 1:12:49 PM

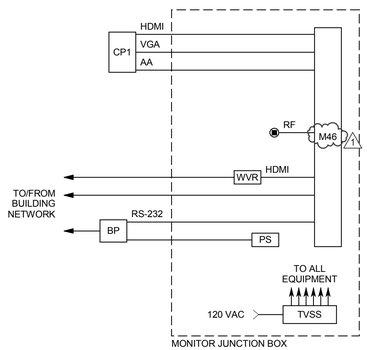

C1 SMALL SYSTEM RISER DIAGRAM

NO SCALE (ROOMS 101, 102H, 133, 134, 135, 136)

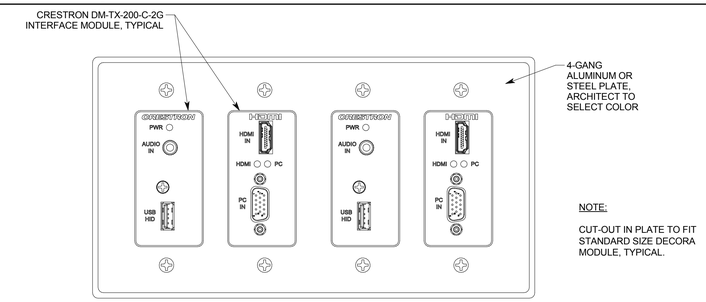

NOTE:

CUT-OUT IN PLATE TO FIT STANDARD SIZE DECORA MODULE, TYPICAL.

D2 FBAV CONNECTION PANEL DETAIL

NO SCALE

FBAV

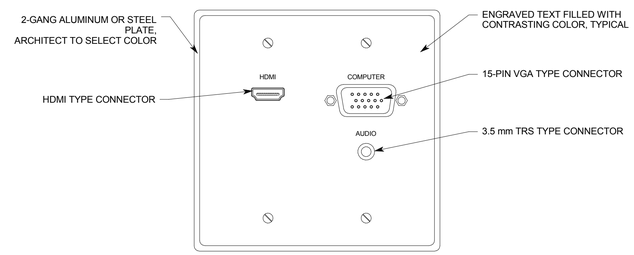

C2 CONNECTION PANEL #1 DETAIL

NO SCALE

CP1

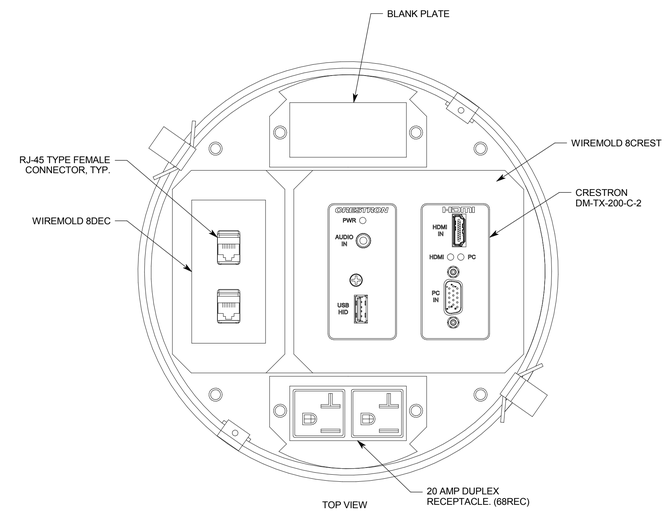

C4 PTAV CONNECTION PANEL DETAIL

NO SCALE

PTAV

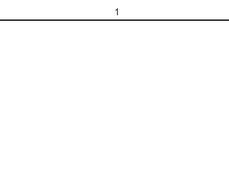

NOTE:
RF INPUT IN NIGHT ROOM 117 ONLY.

B1 TYPICAL FLAT PANEL TV RISER DIAGRAM

NO SCALE

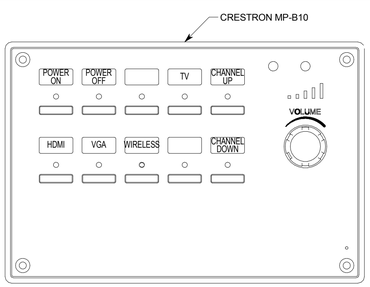

A1 BUTTON PANEL CONTROLLER DETAIL

NO SCALE

BP

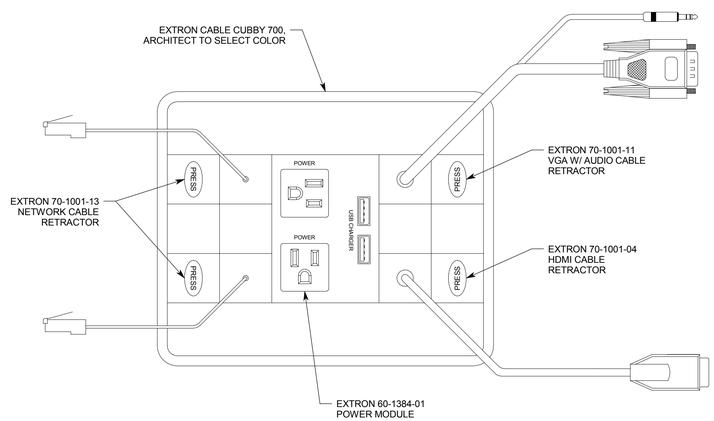

A2 CONNECTION PANEL #2 DETAIL

NO SCALE

CP2

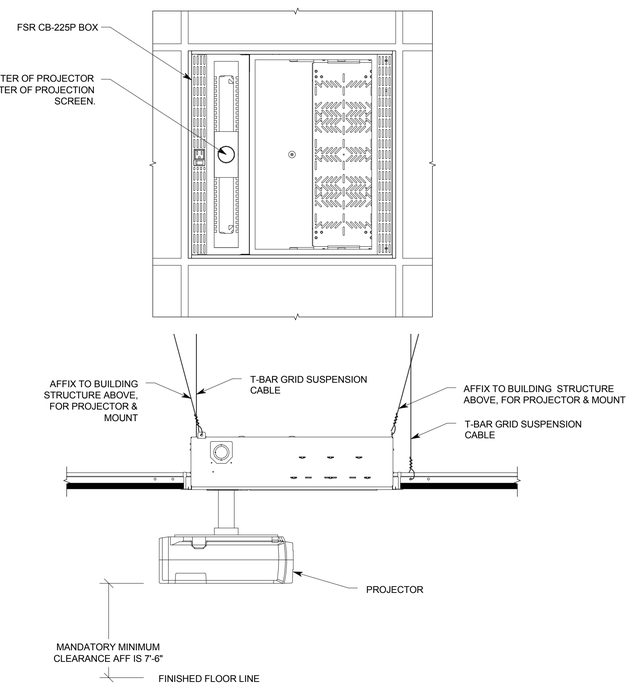

A4 LAY-IN CEILING PROJECTOR MOUNT INSTALLATION DETAIL

NO SCALE

CRSA
649 E. South Temple
Salt Lake City, UT 84102
801.355.5915

MWL
11798 N. Lakeridge Pkwy.
Ashland, VA 23005
804-228-7473

State of Utah
Department of Administrative Services
Division of Facilities Construction & Management
4110 State Office Building
Salt Lake City, Utah 84114
Phone: (801) 538 - 3018
Fax: (801) 538 - 3267

DFCM APPROVAL STAMP

LICENSED PROFESSIONAL ENGINEER
No. 181563
DAVID E. WESEMANN
04-21-2014
STATE OF UTAH

ARCHITECT-ENGINEER STAMP

Unified State Laboratory Module 2

4451 South 2700 West, Taylorsville, UT 84118

DFCM #:	13020300
Project #:	B13-024

DATE:	ISSUE TYPE:
April 21, 2014	BID SET

MARK	DATE	DESCRIPTION
1	May 8, 2015	ADDENDUM #1

CHECKED BY	AWA
DRAWN BY	SJT

AUDIO-VIDEO SYSTEM DETAILS

TA501

VOLUME 2

C:\Users\dlm\Documents\20130620Elec Central_DLM (8-432).rvt
5/4/2015 1:12:51 PM

D1 PTZ CAMERA RISER DIAGRAM

NO SCALE

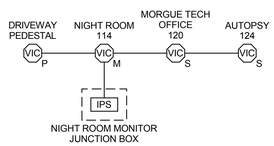

C1 VIDEO INTERCOM RISER DIAGRAM

NO SCALE

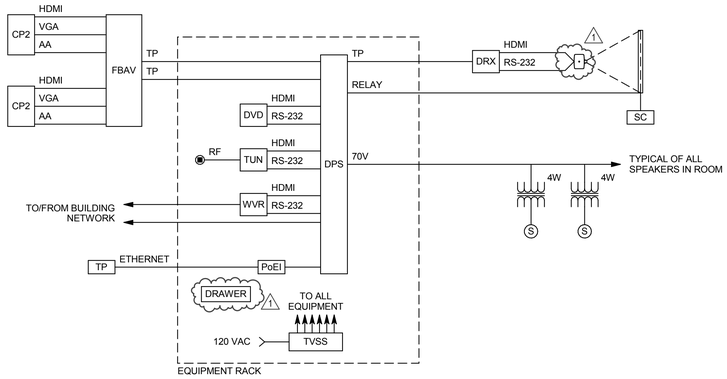

C2 AUDIO/VISUAL SYSTEM RISER DIAGRAM

NO SCALE (ROOM 102F)

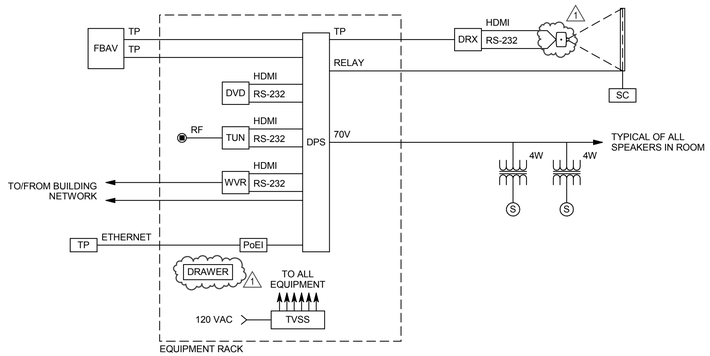

C4 AUDIO/VISUAL SYSTEM RISER DIAGRAM

NO SCALE (ROOM 131)

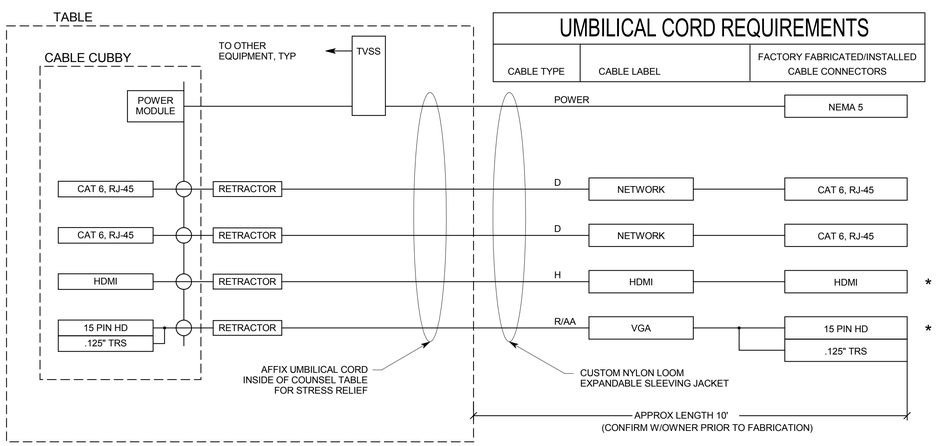

UMBILICAL CORD REQUIREMENTS

CABLE TYPE	CABLE LABEL	FACTORY FABRICATED/INSTALLED CABLE CONNECTORS

NOTES:

1. PROVIDE UMBILICAL CORDS WITH FACTORY INSTALLED CONNECTORS. DO NOT FABRICATE CONNECTORS ON SITE OR AT SHOP.
2. CONFIRM THE OWNER'S DESIRED UMBILICAL CORD LENGTH PRIOR TO FABRICATION.

A1 CONFERENCE TABLE UMBILICAL CORD DETAIL

NO SCALE

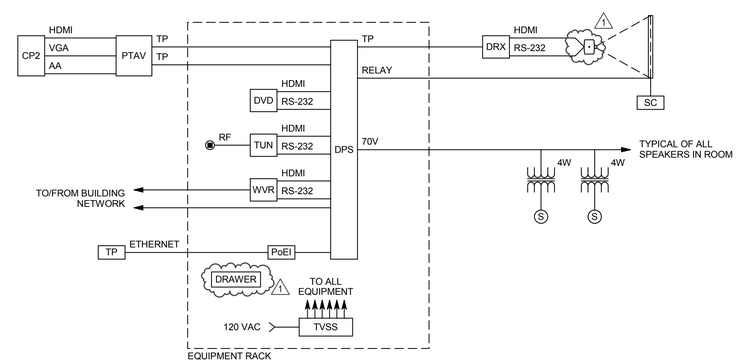

A4 AUDIO/VISUAL SYSTEM RISER DIAGRAM

NO SCALE (ROOMS 306, 310B)

CRSA
649 E. South Temple
Salt Lake City, UT 84102
801.355.5915

MWL
11798 N. Lakeridge Pkwy.
Ashland, VA 23005
804-228-7473

State of Utah
Department of Administrative Services
Division of Facilities Construction & Management
4110 State Office Building
Salt Lake City, Utah 84114
Phone: (801) 538 - 3018
Fax: (801) 538 - 3267

DFCM APPROVAL STAMP

LICENSED PROFESSIONAL ENGINEER
No. 181563
DAVID E. WESEMANN
04-21-2014
STATE OF UTAH

ARCHITECT-ENGINEER STAMP

Unified State Laboratory Module 2

4451 South 2700 West, Taylorsville, UT 84118

DFCM #: 13020300

Project #: B13-024

DATE:	ISSUE TYPE:
April 21, 2014	BID SET

MARK	DATE	DESCRIPTION
1	May 8, 2015	ADDENDUM #1

CHECKED BY	AWA
DRAWN BY	SJT

AUDIO-VIDEO SYSTEM DIAGRAMS

TA601

VOLUME 2

C:\Users\dm\Documents\20130326Elec-Central_DLM (8432).rvt
5/4/2015 1:12:52 PM