State of Utah

GARY R. HERBERT
Governor

SPENCER J. COX
Lt. Governor

Department of Administrative Services
KIMBERLY K. HOOD
Executive Director

Division of Facilities Construction and Management
BRUCE WHITTINGTON
Interim Director

Addendum No. 5

Date:	May 21, 2015
To:	Contractors
From:	Rick James – Project Manager, DFCM
Reference:	Unified State Laboratory – Module 2 Department of Public Safety Department of Health Department of Agriculture and Food DFCM Project No. 13020300
Subject:	**Addendum No. 5**

Pages	Addendum Cover Sheet	1	page
	Revised Project Schedule	2	pages
	Architect's Addendum No. 3	327	pages
	Total	330	pages

Note: This Addendum shall be included as part of the Contract Documents. Items in this Addendum apply to all drawings and specification sections whether referenced or not involving the portion of the work added, deleted, modified, or otherwise addressed in the Addendum. Acknowledge receipt of this Addendum in the space provided on the Bid Form. Failure to do so may subject the Bidder to Disqualification.

5.1 **SCHEDULE:** Revised project schedule attached.
The Final Addendum Date has been changed, see attached schedule for ALL changes.

5.2 **GENERAL ITEMS:** See Architect's Addendum No. 3 dated May 21, 2015.

STATE OF UTAH - DEPARTMENT OF ADMINISTRATIVE SERVICES

Division of Facilities Construction and Management

DFCM

PROJECT SCHEDULE-REVISED
PER ADDENDUM NO. 5 DATED MAY 21, 2015

PROJECT NAME: **UNIFIED STATE LABORATORY - MODULE 2**
DEPARTMENT OF PUBLIC SAFETY
DEPARTMENT OF HEALTH
DEPARTMENT OF AGRICULTURE AND FOOD
SALT LAKE CITY, UTAH

DFCM PROJECT NO. **13020300**

Event	Day	Date	Time	Place
Request for Proposals and Construction Documents Available	Friday	April 17, 2015	3:00 PM	DFCM web site *
Mandatory Pre-Proposal Site Meeting	Monday	April 27, 2015	10:30 AM	Unified State Laboratories Conference Training Room 4431 South 2700 West Salt Lake City, Utah
Laboratory Tours of Existing Facilities-Unified State Labs	Wednesday	April 29, 2015		
Crime Lab/Ogden BDO 801-393-4549 ----------			12:30 PM ----------	819 West 2nd Street Ogden, Utah ----------
Crime Lab Taylorsville 801-965-4547 ----------			2:00 PM ----------	4501 South 2700 West Taylorville, Utah ----------
Agricultural Laboratory 801-538-7100 ----------			3:15 PM ----------	350 North Redwood Road Salt Lake City, Utah ----------
Department of Health State Medical Examiner 801-584-8410			4:30 PM	480 North Mario Capecchi Salt Lake City, Utah
Last Day to Submit Questions prior to submittal of Statements of Qualifications	Thursday	April 30, 2015	3:00 PM	Rick James- DFCM E- mail: rjames@utah.gov
Addendum Deadline	Friday	May 1, 2015	3:00 PM	DFCM web site *
Prime Contractors turn in References, Statements of Qualifications, Management Plans (including Schedule), and Termination/Debarment Certifications	Monday	May 4, 2015	12:00 Noon	DFCM Room 4110 State Office Bldg Capitol Hill Complex SLC, UT

Short Listing by Selection Committee (if applicable)	Wednesday	May 6, 2015	10:00 AM	DFCM, 4112 State Office Building, Salt Lake City, Utah 84114
Announcement of Finalists	Thursday	May 7, 2015	3:00 PM	DFCM web site*
Last Date to Submit Questions for Final Addendum	Tuesday	May 19, 2015	3:00 PM	Rick James- DFCM E- mail: rjames@utah.gov
Final Addendum Deadline	Friday	May 22, 2015	3:00 PM	DFCM web site *
Prime Contractors Turn In Cost Proposals and Cost Reduction Proposals	Friday	May 29, 2015	3:00 PM	DFCM, Room 4110 State Office Bldg, Capitol Hill Complex SLC, UT
Subcontractor List Due	Saturday	May 30, 2015	3:00 PM	dfcmcontracts@utah.gov
Interviews	Wednesday	June 3, 2015	TBD	DFCM, 4112 State Office Building, Salt Lake City, Utah 84114
Announcement	Friday	June 4, 2015	3:00 PM	DFCM web site*
Substantial Completion		January 18, 2017		

*** DFCM's web site address is http://dfcm.utah.gov.**

CRSA
ARCHITECTURE · PLANNING · INTERIORS
649 E SOUTH TEMPLE · SLC, UT 84102 · 801.355.5915 · www.crsa-us.com

Addendum #3

PROJECT NAME: Unified State Laboratory Module 2 **DATE: May 21, 2015**

CRSA Project #.:13-024
DFCM Project #: 13020300

FROM: CRSA
649 E. South Temple
Salt Lake City, Utah 84103
(801) 355-5915
Fax (801) 355-9885

TO: All Bidders

The original specifications and drawings, labeled "Bid Set", dated April 21, 2014 for the project referenced above are amended by the following content and form a part of the Contract Documents.

Receipt of this addendum shall be acknowledged by inserting its number and date in the space provided on the bid form.

Attachments:

- Drawing Sheets: LS101, LS401, C000, C100, C300, C400, AE002, AE003, AS103, AE101A, AE101B, AE101C, AE102A.D, AE102C, AE103B, AE109B, AE110C, AE111A, AE111B, AE302, AE504, AE550, AE601, AE602, AE610, MH101C, MH102B, MH103A, ME605, PE101B, PE103A, PE103B, PW101B, PW101C, PW102B, PW103A, PW103B, PE602, ES102, EP101B, EP101D, EP102A, EP102B, EP103A, EP103B, EP104, EP601, EP602, EP605, EP608, EL101A, EL101B, EL101C, EL102A, EL102B, EL103A, EL103A, EL501, EL502, EL503, EL504, EL505, EL601, EL602,
- Specifications: 012100, 012300, 055213, 101100, 102113, 134900, 220533, 226610, 230533, 230900, 230910, 230940, 232123, 233113, 237326, 238243, 312000, 321216
- Answers to Bidders Questions (5) pages on 8-1/2x11.
- Mechanical Narrative (6) pages on 8-1/2x11.
- Electrical Narrative, Electrical Bid Form & Lodox Planning Guide (57) pages on 8-1/2x11.

Changes to Prior Addenda:

1. DFCM's addenda numbering system takes precedence over the architectural numbering system.
   a. Architects Addendum #1 was part of DFCM's addendum #3
   b. Architects Addendum #2 was part of DFCM's addendum #4
2. In architects addendum #2 sheet S102B referred to details on sheet S705. Sheet S705 was part of Architects Addendum #1.

Changes to Procurement Requirements:

1. Refer to DFCM's portion of the addenda.

Changes to Contracting Requirements:

1. Refer to DFCM's portion of the addenda.

Changes to Specifications Div 02-14:

1. Section 012100 Allowances: Added Spacesaver cut sheets and total dollar amount.
2. Section 012300 Alternates: Added Alternates #1 & #2.
3. Section 055213 Pipe and Tube Rails: Missing from manual, attached.
4. Section 077260 Part 2 Products: Approved Manufacturer: Rooftop Anchors Inc.
5. Section 083323.1 Part 2 Products: Approved Manufacturer:

    a. Hormann-Flexon, Speed Guardian 4000
    b. Dynaco, Entre Matic Overhead Coiling Door.
6. Section 084243 ICU Door: Provide lead lined ICU door and glazing for units indicated on door schedule. Provide equivalent protection of 1/16" lead lining.
7. Section 107113.43: Part 2 Products: Approved Manufacturer: United Skys, Inc
8. Section 101100 Visual Display Units: Missing from manual, attached.
9. Section 102113 Toilet Partitions: Changed to Stainless Steel Partitions
10. Section 115353 Part 2 Products: Approved Manufacturer: Thermo Scientific, 1300 Series Class II A2 Bio Safety Cabinet.
11. Section 117810: Part 2 Products: Approved Manufacturer: Mopec products manufactured by Norlake.
12. Section 130800: Part 2 Products: Approved Manufacturer: Mopec products manufactured by Norlake.
13. Section 134900 Radiation Protection: New section.
14. The following sections are listed on the Table of Contents but are not a part of this project and are deleted: 224223, 224500, 226700, 232213, 235218, 235313, 235316, 235533, 238236

Changes to Site Drawings & Specifications:

1. LS101: Added Steel Bollards to east side of building in front of new electrical equipment.
2. LS401: Clarified planting areas and re-vegetation areas.
3. C000-Demolition Plan:
    a. Added note to demolish existing 4.0' wide section of walk on the east side of USL #1.
    b. Added a note to sawcut, remove & replace 24" of existing asphalt paving adjacent to new drive into sally port.
4. C100- Site Plan: Labelled the 36" waterways on each side of the new parking area. Added 24" HD asphalt patch adjacent to 5.0' waterway for new drive aisle into sally port area. Updated HD asphalt thickness to 4" in lieu of 3.5"
5. C300 – Utility Plan:
    a. Reduced water meter callout from 4" meter to 3" meter to match detail on Sheet C403.
    b. Updated roof drain tie in locations to match those shown on Sheets PW101 A, B & C.
    c. Updated sand/oil separator on north side of sally port to match PW101B.
    d. Updated location of dilution tank and sampling MH to reflect 3000 gallon tank shown on Sheet PW101C. Due to the new utility line alignments and the physical size of this tank, it will need to be rotated 90 degrees as shown to fit within the available area north of the VEB 1 & 2.
6. C400 – Construction Details: Updated Light and Heavy Duty Pavement Sections in Details 5 & 7 to match Geotechnical Report Recommendations.
7. 312000 – Earth Moving: Updated Paragraph 2.1.E (Soil Materials) to allow up to 11% passing the No. 200 Sieve.
8. 321216 – Asphalt Paving: Deleted Paragraph 3.9 (surface Treatments)

Changes to Architectural Drawings:

1. AE002: Modified wall types for lead lined conditions.
2. AE003: Added details.
3. AS103: Added new sheet for exterior wall elevations.
4. AE101A: Changed wall type.
5. AE101B: Added lead lined wall types.
6. AE101C: Changed shelving call-out.
7. AE102A.D: Changed dimensions.
8. AE102C: Clarified wall types.
9. AE103B: Changed wall type.
10. AE109B: Add lead lined ceiling.
11. AE110C: Clarified ceiling information. Clarified cubicle curtain tracks. Each station (except the east and west end stations) has (3) separate curtain tracks, one for each non-window or non-wall side.
12. AE111A: Clarified soffit material type and orientation.
13. AE111B: Clarified soffit material orientation.
14. AE302: Added call outs.
15. AE504: Modified details and added a detail.
16. AE550: Added shelving detail.
17. AE601: Updated door schedule.

18. AE602: Added door type.
19. AE610: Updated schedules.
20. See attached Mechanical, Plumbing & Electrical addenda items.

Calculations for Building Flush:

The total maximum specified airflow on the airflow control valve schedule is 171,795 cfm with AH-1&2 providing 160,000 cfm total (80,000 cfm each). The following runtimes are based on setting all zones to their maximum airflow rates.

FLUSH OUT PRIOR TO OCCUPANCY
For a building flush-out prior to occupancy USGBC requires 14,000 cfm/sf of OA which gives the follows:

(14,000 cf/sf x 97,174 sf) / 160,000 cfm = 8503 minutes = 141.7 hours = **5.9 days**

FLUSH OUT DURING OCCUPANCY (PHASED FLUSH-OUT)
For a building flush-out during occupancy USBGC requires 3,500 cf/sf of OA prior to occupancy and the remaining 10,500 cf/sf completed during occupancy. This gives the following runtime:

(3,500 cf/sf x 97,174 sf) / 160,000 cfm = 2126 minutes = 35.4 hours = **1.5 days**

(10,500 cf/sf x 97,174 sf) / 160,000 cfm = 6377 minutes = 106.3 hours = **4.4 days**

NOTE: This is NOT a LEED project.

See attached document: "Answers to Bidders Questions".

End of Addendum

No.	Description	Answer/Response
1	Section 055213 is listed in the SPEC index to the specification, but was not included. Please provide.	Attached in Addenda 3
2	Section 101100 is listed in the SPEC index to the specification, but was not included. Please provide.	Attached in Addenda 3
3	Section 102113 is listed in the SPEC index to the specification, but was not included. Please provide.	Not used. Delete from index
4	Section 102113.17 was not in the SPEC index but was included. Please confirm it is supposed to be in the specification.	Delete from project
5	Section 224223 is listed in the SPEC index to the specification, but was not included. Please provide.	Not used. Delete from index
6	Section 224500 is listed in the SPEC index to the specification, but was not included. Please provide.	Not used. Delete from index
7	Section 226700 is listed in the SPECindex to the specification, but was not included. Please provide.	Not used. Delete from index
8	Section 226710 was not in the SPEC index but was included. Please confirm it is supposed to be in the specification.	Attached in Addenda 3
9	Section 232213 is listed in the SPEC index to the specification, but was not included. Please provide.	Not used. Delete from index
10	Section 235218 is listed in the SEPC index to the specification, but was not included. Please provide.	Not used. Delete from index
11	Section 235313 is listed in the SPEC index to the specification, but was not included. Please provide.	Not used. Delete from index
12	Section 235316 is listed in the SPEC index to the specification, but was not included. Please provide.	Not used. Delete from index
13	Section 235533 is listed in the SEPC index to the specification, but was not included. Please provide.	Not used. Delete from index
14	Section 238236 is listed in the SPEC index to the specification, but was not included. Please provide.	Not used. Delete from index
15	Section 275313 is listed in the SPEC index to the specification, but was not included. Please provide.	Not used. Delete from index
16	There is no specification 233113 Metal Ducts. This specification should address any stainless steel ducting requirments also. Please provide.	Attached in Addenda 3
17	DRAWING C201 was not in the SHEET index but was included the set of plans provided. Please confirm it is supposed to be in the DRAWINGS.	Attached in Addenda 3
18	DRAWING ME508 was not in the SHEET index but was included. Please confirm it is supposed to be in the DRAWINGS.	Confirmed it is part of the work.
19	DRAWINGS ME708 was not in theSHEET index but was included. Please confirm it is supposed to be in the DRAWINGS	Confirmed it is part of the work.
20	DRAWINGS ME709 was not in the SHEETindex but was included. Please confirm it is supposed to be in the DRAWINGS	Confirmed it is part of the work.
21	DRAWINGS TA001 was not in the SHEET index but was included. Please confirm it is supposed to be in the DRAWINGS.	Confirmed it is part of the work.
22	DRAWINGS TA002 was not in the SHEET index but was included. Please confirm it is supposed to be in the DRAWINGS.	Confirmed it is part of the work.
23	DRAWINGS TA601 was not in the SHEET index but was included. Please confirm it is supposed to be in the DRAWINGS.	Confirmed it is part of the work.
24	DRAWINGS AE205 was in the SHEET index but was NOT included. Please confirm it is supposed to be in the DRAWINGS.	In Addenda 2
25	Detail 9 IL506 Is flat strap ok to use in lieu of 14 ga. studs or is it expected that the 14 ga. metal stud be cut to fit between vertical studs?	Flat strap backing may be used if allowed by the wall bumper mfg. as a suitable backing.
26	Various Details IL 500 Is flat strap ok to use in lieu of 16 ga. stud blocking or is it expected that the 16 ga. metal stud be cut to fit between vertical studs?	Flat strap backing is acceptable. Alternate is 18 ga studs
27	Detail B5/AE507 For installation purposes and access after insulation it is recommended to install plywood in lieu of Dens Deck at this condition. Please advise.	The substrate may be changed if approved and listed in the manufacturers assembly
28	AE003 - Details B2 and B5 show a C-channel to the right of the detail below the beam. Please confrim that the C-channel is not required as part of the rated beam & wall assembly.	The proposed/ listed UL assemblies shall govern, If not required for the listed assembly then means and methods may adapt the detail to provide the required condition
29	AE003 - Details B2 and B5 show a slotted J-track. Slotted j-track is not manufactured. Please confirm that standard J-track is acceptable.	The proposed / listed rated assembly shall govern. If another product is approved in a different but equal assembly that is acceptable.

30	B2/AE003 - the 1" liner panel is shown extending 9-5/8" above the slab edge and is not supported anywhere. What is the method of securing the liner panel? The detail appears to show it being notched around studs, but nothing to support it, if required, is shown. Please advise.	Attach top of liner panel to a channel or stud at the top fo the concrete curb.
31	B2, B5/AE003 does the 25 ga. mesh angle and fireproofing have to be able to account for 5/8" deflection?	Yes
32	C3, C4/AE504 - the architectural line types of the Ice & water shield and air barrier appear to be used interchangeably. Please revise the details with the correct line types for each application, or correct the notes for the respective product. For example, a discontinuous air barrier is called out on the fascia of C3/AE504; the detail makes more sense as Ice & water, since the air barrier is not continuous.	Revised in Addenda 3
33	A1/AE506 there is a c-channel shown at the underside of the beam which is not sized. Please provide detail for this.	this is a light ga channel part of the 20 ga framing
34	A4/AE506 states "Metal Soffit. See Ceiling plan for type. " There appears to be one metal soffit type, but 2 applications of installation. Please confirm that detail A3/AE530 only applies to the metal soffit on Level 1 between Grids 5 and 6 and that all the other soffit installation is similar to A4/AE506.	The soffit panel shown no A4/AE506 & A3/AE530 are the same panel (SFT). Panel SFT2 has been added in addenda 3 for detail C5/AE506.
35	AE002 - Wall types E2, E6, and L show 3" mineral wool and that a Z-furring is required for the attachment of the metal panel, but no Z-furring member is shown. Certain details appear to be showing Z-furring, B4/AE503, but others do not, Please clarify the interaction of the Z-furring, the 3" mineral wool and the metal panels.	The Z furring is not visible in the referenced detail because the view is horizontal same as the orientation of the Z furring. The furring is called out. It supports the metal panel and the insulation
36	D5/AE505 - The detail calls for an 18 ga. flat strap backing along the length of the wall. Is this required at the base of the wall, or at the top of the wall as well? A Z-furring would be required within 12" of the base or head of the wall to attach the flat-strap backing to, and if a Z-furring is required that close to the end of the wall, then can the flat-strap be omitted?	the flat strap backign it intended to allow attachement of the metal panel cleat. 12" is too far away to attached the cleat so the flat stap is extended from the Z furring to meet the cleat.
37	Can Rapid Fire Protection be added as an acceptable Fire Suppression contractor?	No
38	C300 - Calls out a new 4" meter vault. The details on C403 describe a 3" meter vault. Please clarify the size of the meter vault being constructed.	The meter size on the utility plan has been revised to read "3" meter" in lieu of the 4" meter previously shown.
39	Geotechnical Report page 7 indicates that 7-12" of existing material may need to be removed unless the Owner is satisfied with some pavement settlement. There appears to be no over excavation on the site, so are we to assume the Owner will accept possible settlement as outlined in the geotechnical report? Sheet C200 alludes to proper compaction, but does not describe over excavation. Please confirm this understanding.	The existing site shall be cleared and grubbed. The site will need to be built up to subgrade from grubbed elevations which will help bridge pavement loads beneath base course and HMA surface course.
40	Geotechnical Report page 13 recommends 3" of asphalt over 8" base; Detail 5/C400 calls for 7" base. Please confirm the detail shall govern.	Detail 5 has been updated to reflect 3" HMA over 8" base course as described in the geotechnical report
41	Geotechnical Report page 14 recommends 3.5" of asphalt over 10" base; Detail 7/C400 calls for 8" base. Please confirm the detail shall govern.	Detail 7 has been updated to reflect 3.5" HMA over 10" base course as described in the geotechnical report
42	There is no asphalt patching shown at the existing parking lot or to the new road to the sally port. Please confirm that any patching of existing asphalt is to be considered normal-duty thickness.	Use the existing edge of aspalt as a form for the new waterways on the east and west side of the parking lot. Remove/patch 24". Heavy Duty.
43	The bullet resistent panels on Wall type J weigh approximately 13.68 lbs/SF. Please confirm the 20 gauge studs as designed, will support this bullet resistent material.	20 ga studs can accommodate this weight
44	AE101A - the only location we can find wall type J is on the south wall of lobby 138. Typical application of bullet resistent material is to envelope an area completely to create a "safe area". Please describe whether the intent of the design is to create a "safe area". As drawn, there does not appear to be a "safe area" of protection: the family room, the Chief ME and other areas could be penetrated through any other wall. Please provide clarification.	A "safe area" per se is not intended. However we have added additional "j" type walls in addenda 3
45	Please provide the value of the allowance to be included for the Spacesaver units described in Section 012100.3.3.A	Revised in addenda #3
46	Section 012300 does not appear to be completely edited. Please confirm there are no alternates in this project.	Revised in addenda #3
47	Will a bid form be issued for this project and the unit prices which are required?	Yes, this will be provided by DFCM along with misc bidd forms for certain disciplines

48	Please review the substitution request for the Rooftop Anchors with supporting documentation attached.	Approved in addenda #3
49	In the plans, sheet C400, #7 – Typical Bituminous Pavement Section: Heavy Duty Drive: The detail shows the asphalt (3.5”) having to be installed in 2 lifts. UDOT and municipal standards allow up to 4” to be installed in 1 lift.	The requirement for (2) lifts has been removed. Also, the base course thickness has been increased from 8" to 10" on the HD pavement section ond from 7" to 8" on the standard duty section.
50	In specification Section 312000, Earth Moving, page 4, Part 2 – Products, E, Base Course: The specification states that for no more than 8 percent passing the a No. 200 Sieve. APWA, which is the standard for municipal construction, allows a band from 7-11 percent.	% Passing the No. 200 Sieve has been incresed to 11%
51	In specification Section 321216, Asphalt Paving, page 8, Part 3.9 – Surface treatments: a. A fog seal application will make the surface unusable until the fog seal has cured and any sand that is placed on any excess fog seal will give an aged appearance to the surface. Also, it doesn’t serve in necessary purpose, since a ½” mix will be too tight a surface for any of the fog seal to penetrate. b. A slurry seal is typically not used in a parking lot application. A seal coat is what should be specified and a seal coat is not needed until the asphalt surface has oxidized, which can take up to 3 years.	Surface Treatment Sections A & B have been removed from the spec.
52	Clarify TBD amount listed in Allowance #1	Revised in addenda #3
53	Clarify Unit Price No. 3 - Does "Cost in place of pounds of fabricated steel" mean the cost of fabricated steel per pound or cost of fabricate/installed steel per pound?	Cost of fabricated/ installed steel per pound
54	Clarify if any alternates will be required.	Revised in addenda #3
55	Please confirm that a Web-based project camera will be required by the owner as stated in 01-3233 2.2 A&B and 3.2 A,B, &C.	Yes
56	Please confirm that the DFCM will require GC's to implement BIM into this project as stated in 01-3100 1.6 3a.	Yes
57	Will this really be required as state in 01-5000 3.2-I "Install lighting for Project identification sign."?	Delete lighting for project sign
58	Will this be allowed as stated in 01-5000 3.2-D "Toilets: Use of Owner's existing toilet facilities will be permitted, as long as facilities are cleaned and maintained in a condition acceptable to Owner. At Substantial Completion, restore these facilities to condition existing before initial use. "?	Owners toilets may not be used by construction workers.
59	Please confirm that the extensive Owner Training Video Recordings (video, recording, narration, and transcripts) will be required to be performed on this project. Ref. Spec section 01-7900. If yes, is the GC approved as a qualified commercial videographer?	Does the GC have commerical videographers in their employ?
60	Will Owner authorize the use of permanent HVAC systems to be used for temporary heating and cooling? It seems that per spec 23-0150 the answer is yes. However, please confirm.	Yes, as long as flush out procedures and occupancy filters procedures are followed. The contractor is still responsible for tamporary utility costs.
61	On drawing EL101b the Special Procedure Cooler and Freezer doesn’t show any lighting, can you please confirm that the lighting comes with the units and please clarify how many lighting circuits the cooler and freezer require?	Light fixtures for the controlled temp rooms are called for in section 130800
62	Please approve the following as manufacturer/suppliers of the autopsy and morgue equipment: <u>MOPEC</u> <u>Thermo Fisher Scientific</u> <u>Richard-Allan Scientific Company</u> Robin Bailey - Sales Rep robin.bailey@thermofisher.com 480-307-0539	Product substitutions must be submitted per requirements of section 012500
63	Would the DFCM consider allowing bid proposals to be turned in at 2:00 pm instead of at Noon as per the schedule issued in Addendum #1?	See revised schedule from DFCM
64	Please clarify if this is a taxable or tax exempt project?	See the next addenda

65	Please provide a minimum duration for the building flush that is is discussed in specification section 01-8113. Hopefully this requirement can be pinpointed by the mechanical engineer based off of the capacity of the HVAC system and the SF of the building.	See main body of addenda 3
66	Please provide a revised bid form that includes a spot to provide the three unit prices that are being requested in the specs.	Yes, this will be provided by DFCM along with misc bidd forms for certain disciplines
67	Spec section 226600 - 3.2 A> Chemical Waste Sewerage outside the building. Item # 9 Reads Install Field-fabrication containment piping over new and existing carrier piping. Use containment piping manufacturer's fastening system. Is containment piping required and if so where. There are no notes indicating where the existing pipe is to be contained? Please clarify.	We will not require any double containment piping. This will be clarified in Addendum #3
68	Spec Section 226600 list 3 types of pipe for this system. Sch 40 PP with fusion and mechanical joints. Sch 40 PVDF with fusion and mechanical joints and CPVC (Spears Manufacturing Company) with glue joints. IT is not clear if all three types can be used for both underground and above ground. Please clarify.	All three types of piping can be used.
69	The spec section for Duct fabrication is missing. Will there be an addendum addressing this?	Added in addenda #3
70	I need wall types (Looks Like Type E) and a wall cut on the range walls 205D.	Revised in addenda #3
71	Provide elevations and details for the site screen wall, generator, RM Transformer.	Added in addenda #3
72	Please confirm if the building permit is being picked up by the owner. Will it include mechanical, electrical and plumbing permit costs?	All permit costs are paid for by the owner
73	Drawing PE101C has a call out symbol of M2-AC-1 at grid 13 and A.2. This appears to be an air compressor. This is not on any of our equipment schedules. Is this furnished by others? If we are to furnish please provide a schedule and spec for this equipment.	A schedule will be provided in Addendum #3
74	There is a dilution tank and sample manhole shown on drawing PW101C and note 10 reads containment solutions DWT 6(6) 3000 3000 gal tank. Tank to have vinal ester liner. Is this being furnished by utility contractor or by mechanical contractor? There is no spec sec. for this tanks or schedule. Please clarify.	It is intended to be provided by the mechanical contractor. The keyed note will be clarified. A specification will be provided in addendum #3
75	I have reviewed addenda's 2 & 3. I still do not see a specification for Metal Ducts. (233113) Please advise. I need to finish the take-off.	Added in Addenda #3
76	We need to know if the existing Vacuum pumps are made by Rietshhle or Busch so we can match to the existing system.	We believe they are Busch vacuum pumps
77	Please issue a complete specification for the dilution tank.	A specification will be provided in Addendum #3
78	On drawing EL101b the Special Procedure Cooler and Freezer doesn't show any lighting, can you please confirm that the lighting comes with the units and please clarify how many lighting circuits the cooler and freezer require?	Light fixtures for the controlled temp rooms are called for in section 130800. There is a j-box and cirucit shown on EP101b for the circuiting lights
79	The hatch patterns on the finish plans (AE105-AE108) indicate the flooring will not be going under the laboratory casework. Can you confirm that the laboratory casework will be installed before the finish flooring?	the finish drawings ghost in the lab casework.
80	Will the winding sidewalk that goes from the patio are to the new mechanical room be required to stay in during construction? With the water lines and tunnel it seems that this sidewalk should come out.	The drawings show the winding sidewalk as new. The existing walk may be removed for construction
81	Section 26 05 33.2.4.B specifies a two section surface raceway. In most cases the surface raceway accommodates normal power, critical power and data outlets. Data cables will occupy one channel of the surface mounted raceway. Are we allowed to run normal and critical power in the same raceway on this project? If not, do we need to provide three channel surface mounted raceway?	Normal and Critical power is allowed to run in the same channel of the raceway

	1. In specification section 226314-4.2.6 and 2.7, the wording seems to indicate that manufacturers other than Spectra Gas will be accepted as long as the equipment complies to this spec section. Can this be clarified or confirmed? 2. In the same specification section as above in 2.6, Model F37431xx015 regulator is called out. It seems this part number may be inaccurate or incomplete as I have been unable to cross-reference. Can this model number be clarified or more information provided? 3. Drawing Sheets PE102B (Key Note 7) and PE103A (Key Note 8-9) – It is very difficult to determine which gases need single regulator stations and which need change-over manifolds. With the large volume of piping in the drawing in very small areas, it is not clear what is required related to these items and which gases need what. There also seems to be some labels missing? Can this be clarified with a Manifold and Regulator schedule or some other detail provided to clarify this. Or, are these perhaps to be supplied by the same "separate division" that is to be providing the Hydrogen Generators?	We will clarify these items in Addedmum #3
	Is there a possibility that the bid could be pushed back a few days to allow for some more reaction time following the issuance of Add#1 and #2. The weekend holiday will present challenges to suppliers and subcontractors as well.	See revised schedule from DFCM
	Please confirm all mechanical piping systems are to be welded.	Not all piping is welded. Only where indicated in the specifications (mostly for piping 2-1/2" and above.)
	What material is the buried condenser water piping?	Blue Brute. We will clarify in addendum #3
	Preheat coils at the Phoenix control valves are not scheduled. The vendor has indicated to me that the water coils are not included as part of the air control valve assembly. Should they be scheduled separately?	They are scheduled with the air control valves. They are usually provided seperately from the valves. The schedule is suficient as it stands.
	What are the BIM requirements for this project?	BIM is required per section 013100
	Please issue a spec for the visual displays as indicated on the table of contents.	Attached in Addenda 3
	The specification call for a self-adhering sheet waterproofing but the plans show a fluid applied waterproofing membrane (key note 14/AS102, key note 25/AE302, and detail C5/AE550). Which should it be? The specifications include dampproofing but the plans do not indicate where dampproofing is to be applied. Please provide direction.	Damproofing is provided on all below grade walls & footings of the main building & central plant addition. Waterproofing is required at the tunnel and around all elevator pits. Provide waterproofing type as per specification.
	In looking at the door Schedule. It calls for Door # 100BB & 100DD to be type P-R, which is a high speed door. I am unable to locate them on the drawings. Please advise if these are actually high speed doors and where they are located on the drawings?	these doors are deleted per addenda 3
	In 26 27 26.2.10.A.2.b, Wall Plates, calls for Non-Lab Spaces to provide from full range of finished metal plates, as selected by the Architect. Painted metal wall plates have limited availability and selection. Please verify that metal plates are desired instead of nylon plates which are readily available and come in a large selection of colors. Division 27 doesn't have a specification for Com/Data. May we assume that we only provide raceway with pull string for this system?	If metal wall plates are selected by the Architect, they will not be the painted variety, but commonly available types such as stainless steel. Bid shall include the cost for such metal plates, but the final selection will be by Architect during the submittal process. The voice and data cabling will be installed by or under the direction of the Owner. Conctractor to coordinate with Owner's cabling installer in terms of construction sequence and interface with other trades.
	Please confirm thickness and density of rigid insulation under cooler and freezer as the details conflict on AE560 Detail 2 and IL506 Detail 3.	The floor should be recessed 8" for 4" of insulation and 4" of concrete.
	Provide elevation and cut for the Glass Guardrail AE121 Note 7. Provide detail for the glass gate and hardware AE 121 Note 10.	The cut is A3/AE506 and the height is specified. See addenda 2 for the gate info.
	Locker Room 110 Does it have tile on all the walls or just the one in the elevation?	Just the one in the elevation

SECTION 312000 EARTH MOVING

PART 1 - GENERAL

1.1 RELATED DOCUMENTS

A. Drawings and general provisions of the Contract, including General and Supplementary Conditions and Division 01 Specification Sections, apply to this Section.

1.2 SUMMARY

A. This Section includes the following:

1. Preparing sub-grades for slabs on grade, walks, pavements, lawns and grasses, and exterior plants.
2. Excavating and backfilling for buildings and structures.
3. Drainage course for slabs-on-grade.
4. Subbase course for concrete walks and pavements.
5. Subbase and base course for asphalt paving.
6. Subsurface drainage backfill for walls and trenches.
7. Excavating and backfilling for utility trenches.
8. Excavating and backfilling trenches for buried mechanical and electrical utilities and pits for buried utility structures.

B. Related Sections include the following:

1. Division 01 Section "Allowances" for quantity allowance provisions related to unit-price rock excavation and authorized additional excavation.
2. Division 01 Section "Unit Prices" for unit-price rock excavation and authorized additional excavation provisions.
3. Division 01 Section Construction Progress Documentation and Photographic Documentation for recording pre-excavation and earthwork progress.
4. Division 01 Section “Temporary Facilities and Controls" for temporary controls, utilities, and support facilities.
5. Division 01 Section "Temporary Tree and Plant Protection" for protecting and trimming trees to remain.
6. Division 03 Section "Cast-in-Place Concrete" for granular course if placed over vapor retarder and beneath the slab-on-grade.
7. Divisions 21, 22, 23, 26, 27, and 28 Sections for installing underground mechanical and electrical utilities and buried mechanical and electrical structures.
8. Division 31 Section "Site Clearing" for temporary erosion and sedimentation control measures, site stripping, grubbing, stripping and stockpiling topsoil, and removal of above-grade and below-grade improvements and utilities.
9. Division 31 Section "Dewatering" for lowering and disposing of ground water during construction.
10. Division 31 Section "Excavation Support and Protection" for shoring, bracing, and sheet piling of excavations. (Not Used)
11. Division 31 Section "Drilled Concrete Piers and Shafts" for excavation of shafts and disposal of surplus excavated material. (Not Used)
12. Division 32 Section "Turf and Grasses" for finish grading, including preparing and placing topsoil and planting soil for lawns.
13. Division 32 Section "Plants" for planting bed establishment and tree and shrub pit excavation and planting.
14. Division 33 Section "Sub-drainage" for drainage of foundations, slabs on grade, walls, and landscaped areas.

1.3 UNIT PRICES

A. Unit prices for earthwork are included in Division 01 Section "Unit Prices."

B. Quantity allowances for earthwork are included in Division 01 Section "Allowances."

C. Rock Measurement: Volume of rock actually removed, measured in original position, but not to exceed the following. Unit prices for rock excavation include replacement with approved materials.

1. 24-inches outside of concrete forms other than at footings.
2. 12-inches outside of concrete forms at footings.
3. 6-inches outside of minimum required dimensions of concrete cast against grade.
4. Outside dimensions of concrete walls indicated to be cast against rock without forms or exterior waterproofing treatments.
5. 6-inches beneath bottom of concrete slabs-on-grade.
6. 6-inches beneath pipe in trenches, and the greater of 24-inches wider than pipe or 42-inches wide.

1.4 DEFINITIONS

A. Backfill: Soil material or controlled low-strength material used to fill an excavation.

1. Initial Backfill: Backfill placed beside and over pipe in a trench, including haunches to support sides of pipe.
2. Final Backfill: Backfill placed over initial backfill to fill a trench.

B. Base Course: Course placed between the subbase course and hot-mix asphalt paving.

C. Bedding Course: Course placed over the excavated subgrade in a trench before laying pipe.

D. Borrow Soil: Satisfactory soil imported from off-site for use as fill or backfill.

E. Drainage Course: Course supporting the slab-on-grade that also minimizes upward capillary flow of pore water.

F. Excavation: Removal of material encountered above subgrade elevations and to lines and dimensions indicated.

1. Authorized Additional Excavation: Excavation below subgrade elevations or beyond indicated lines and dimensions as directed by Architect. Authorized additional excavation and replacement material will be paid for according to Contract provisions for unit prices and changes in the work.
2. Bulk Excavation: Excavation more than 10-feet in width and more than 30-feet in length.
3. Unauthorized Excavation: Excavation below subgrade elevations or beyond indicated lines and dimensions without direction by Architect. Unauthorized excavation, as well as remedial work directed by Architect, shall be without additional compensation.

G. Fill: Soil materials used to raise existing grades.

H. Rock: Rock material in beds, ledges, un-stratified masses, conglomerate deposits, and boulders of rock material that exceed 1 cubic yard for bulk excavation or 3/4 cubic yard for footing, trench, and pit excavation that cannot be removed by rock excavating equipment equivalent to the following in size and performance ratings, without systematic drilling, ram hammering, ripping, or blasting, when permitted:

1. Excavation of Footings, Trenches, and Pits: Late-model, track-mounted hydraulic excavator; equipped with a 42-inch wide, maximum, short-tip-radius rock bucket; rated at not less than 138-hp flywheel power with bucket-curling force of not less than 28,090-lbf and stick-crowd force of not less than 18,650-lbf; measured according to SAE J-1179.

2. Bulk Excavation: Late-model, track-mounted loader; rated at not less than 210-hp flywheel power and developing a minimum of 48,510-lbf breakout force with a general-purpose bare bucket; measured according to SAE J-732.

I. Structures: Buildings, footings, foundations, retaining walls, slabs, tanks, curbs, mechanical and electrical appurtenances, or other man-made stationary features constructed above or below the ground surface.

J. Subbase Course: Course placed between the subgrade and base course for hot-mix asphalt pavement, or course placed between the subgrade and a cement concrete pavement or a cement concrete or hot-mix asphalt walk.

K. Subgrade: Surface or elevation remaining after completing excavation, or top surface of a fill or backfill immediately below subbase, drainage fill, or topsoil materials.

L. Utilities: On-site underground pipes, conduits, ducts, and cables, as well as underground services within buildings.

1.5 SUBMITTALS

A. Product Data: For the following:

1. Each type of plastic warning tape.
2. Geotextile.
3. Controlled low-strength material, including design mixture.
4. Geofoam. (Not Used

B. Samples: 12-by-12-inch Sample of sub-drainage and other geotextiles used.

C. Material Test Reports: From a qualified testing agency indicating and interpreting test results for compliance of the following with requirements indicated:

1. Classification according to ASTM D 2487 of each on-site and borrow soil material proposed for fill and backfill.
2. Laboratory compaction curve according to ASTM D698 or ASTM D1557 for each on-site and borrow soil material proposed for fill and backfill.

D. Blasting Plan: For record purposes and for approval of authorities having jurisdiction.

E. Seismic Survey Report: For record purposes; from seismic survey agency.

F. Pre-excavation Photographs or Videotape: Show existing conditions of adjoining construction and site improvements, including finish surfaces, that might be misconstrued as damage caused by earthwork operations. Submit before earthwork begins.

1.6 QUALITY ASSURANCE

A. Blasting: Comply with applicable requirements in NFPA 495, "Explosive Materials Code," and prepare a blasting plan reporting the following:

1. Types of explosive and sizes of charge to be used in each area of rock removal, types of blasting mats, sequence of blasting operations, and procedures that will prevent damage to site improvements and structures on Project site and adjacent properties.
2. Seismographic monitoring during blasting operations.

B. Seismic Survey Agency: An independent testing agency, acceptable to authorities having jurisdiction, experienced in seismic surveys and blasting procedures to perform the following services:

1. Report types of explosive and sizes of charge to be used in each area of rock removal, types of blasting mats, sequence of blasting operations, and procedures that will prevent damage to site improvements and structures on Project site and adjacent properties.
2. Seismographic monitoring during blasting operations.

C. Geotechnical Testing Agency Qualifications: An independent testing agency qualified according to ASTM E 329 to conduct soil materials and rock-definition testing, as documented according to ASTM D 3740 and ASTM E 548.

D. Pre-excavation Conference: Conduct conference at Project site to comply with requirements in Division 01 Section "Project Management and Coordination."

1.7 PROJECT CONDITIONS

A. Existing Utilities: Do not interrupt utilities serving facilities occupied by Owner or others unless permitted in writing by Architect and then only after arranging to provide temporary utility services according to requirements indicated.

1. Notify Architect not less than two days in advance of proposed utility interruptions.
2. Do not proceed with utility interruptions without Architect's written permission.
3. Contact utility-locator service for area where Project is located before excavating.

B. Demolish and completely remove from site existing underground utilities indicated to be removed. Coordinate with utility companies to shut off services if lines are active.

PART 2 - PRODUCTS

2.1 SOIL MATERIALS

A. General: Provide borrow soil materials when sufficient satisfactory soil materials are not available from excavations.

B. Satisfactory Soils: ASTM D 2487 Soil Classification Groups GW, GP, GM, SW, SP, and SM or AASHTO M 145 Soil Classification Groups A-1, A-2-4, A-2-5, and A-3, or a combination of these groups; free of rock or gravel larger than 3-inches in any dimension, debris, waste, frozen materials, vegetation, and other deleterious matter. Native rock crushed to meet the above requirements and free from significant porosity may also be used as satisfactory soils.

C. Unsatisfactory Soils: Soil Classification Groups GC, SC, CL, ML, OL, CH, MH, OH, and PT according to ASTM D 2487 or A-2-6, A-2-7, A-4, A-5, A-6, and A-7 according to AASHTO M 145, or a combination of these groups.

1. Unsatisfactory soils also include satisfactory soils not maintained within 2 percent of optimum moisture content at time of compaction.

D. Subbase Material: Naturally or artificially graded mixture of natural or crushed gravel, crushed stone, and natural or crushed sand; ASTM D 2940; with at least 90 percent passing a 1-1/2-inch sieve and not more than 12 percent passing a No. 200 sieve.

E. Base Course: Naturally or artificially graded mixture of natural or crushed gravel, crushed stone, and natural or crushed sand; ASTM D 2940; with at least 95 percent passing a 1-inch sieve and not more than ~~8~~ 11 percent passing a No. 200 sieve.

F. Engineered Fill: Naturally or artificially graded mixture of natural or crushed gravel, crushed stone, and natural or crushed sand; ASTM D 2940; with at least 90 percent passing a 1-1/2-inch sieve and not more than 8 percent passing a No. 200 sieve.

G. Bedding Course: Naturally or artificially graded mixture of natural or crushed gravel, crushed stone, and natural or crushed sand; ASTM D 2940; except with 100 percent passing a 3/4-inch sieve and not more than 8 percent passing a No. 200 sieve.

H. Drainage Course: Narrowly graded mixture of washed or crushed stone, or crushed or uncrushed gravel; ASTM D 448; coarse-aggregate grading Size 57; with 100 percent passing a 1-1/2-inch sieve and 0 to 5 percent passing a No. 8 sieve.

I. Filter Material: Narrowly graded mixture of natural or crushed gravel, or crushed stone and natural sand; ASTM D 448; coarse-aggregate grading Size 67; with 100 percent passing a 1-inch sieve and 0 to 5 percent passing a No. 4 sieve.

J. Sand: ASTM C 33; fine aggregate, natural, or manufactured sand.

K. Impervious Fill: Clayey gravel and sand mixture capable of compacting to a dense state.

2.2 GEOTEXTILES

A. Subsurface Drainage Geotextile: Non-woven needle-punched geotextile, manufactured for subsurface drainage applications, made from polyolefins or polyesters; with elongation greater than 50 percent; complying with AASHTO M 288 and the following, measured per test methods referenced:

1. Survivability: Class 2; AASHTO M 288.
2. Grab Tensile Strength: 157 lbf; ASTM D 4632.
3. Sewn Seam Strength: 142 lbf; ASTM D 4632.
4. Tear Strength: 56 lbf; ASTM D 4533.
5. Puncture Strength: 56 lbf; ASTM D 4833.
6. Apparent Opening Size: No. 60 sieve, maximum; ASTM D 4751.
7. Permittivity: 0.2 per second, minimum; ASTM D 4491.
8. UV Stability: 50 percent after 500 hours' exposure; ASTM D 4355.

B. Separation Geotextile: Woven geotextile fabric, manufactured for separation applications, made from polyolefins or polyesters; with elongation less than 50 percent; complying with AASHTO M 288 and the following, measured per test methods referenced:

1. Survivability: Class 2; AASHTO M 288.
2. Grab Tensile Strength: 247 lbf; ASTM D 4632.
3. Sewn Seam Strength: 222 lbf; ASTM D 4632.
4. Tear Strength: 90 lbf; ASTM D 4533.
5. Puncture Strength: 90 lbf; ASTM D 4833.
6. Apparent Opening Size: No. 60 sieve, maximum; ASTM D 4751.
7. Permittivity: 0.02 per second, minimum; ASTM D 4491.
8. UV Stability: 50 percent after 500 hours' exposure; ASTM D 4355.

2.3 CONTROLLED LOW-STRENGTH MATERIAL

A. Controlled Low-Strength Material: Low-density, self-compacting, flowable concrete material as follows:

1. Portland Cement: ASTM C 150, Type II.
2. Fly Ash: ASTM C 618, Class C or F.
3. Normal-Weight Aggregate: ASTM C 33, 3/4-inch to 3/8-inch nominal maximum aggregate size.
4. Foaming Agent: ASTM C 869.
5. Water: ASTM C 94/C 94M.
6. Air-Entraining Admixture: ASTM C 260.

B. Produce low-density, controlled low-strength material with the following physical properties:

1. As-Cast Unit Weight: 30 to 36 lb/cu. ft. at point of placement, when tested according to ASTM C 138/C 138M.
2. Compressive Strength: 80 psi , when tested according to ASTM C 495.

2.4 GEOFOAM

A. Extruded-Polystyrene Board Insulation: ASTM C 578, Type IV, 1.60 lb/cu. Ft., Type X, 1.30 lb/cu. Ft. or Type VI, 1.80 lb/cu. ft. as directed by Architect. (Not Used)

B. Molded-Polystyrene Board Insulation: ASTM C 578, Type I, 0.90 lb/cu. ft., Type VIII, 1.15 lb/cu. ft., or Type II, 1.35 lb/cu. ft. as directed by Architect. (Not Used)

1. Manufacture molded polystyrene with an inorganic mineral registered with the EPA and suitable for application as a termite deterrent.

C. Geofoam Connectors: Geofoam manufacturer's multibarbed galvanized steel sheet connectors or Deformed steel reinforcing bars, 3/4 inch in diameter as directed by Architect. (Not Used)

2.5 ACCESSORIES

A. Warning Tape: Acid- and alkali-resistant polyethylene film warning tape manufactured for marking and identifying underground utilities, 6 inches wide and 4 mils thick, continuously inscribed with a description of the utility; colored as follows:

B. Detectable Warning Tape: Acid- and alkali-resistant polyethylene film warning tape manufactured for marking and identifying underground utilities, a minimum of 6 inches wide and 4 mils thick, continuously inscribed with a description of the utility, with metallic core encased in a protective jacket for corrosion protection, detectable by metal detector when tape is buried up to 30 inches deep; colored as follows when required by utility purveyor:

1. Red: Electric.
2. Yellow: Gas, oil, steam, and dangerous materials.
3. Orange: Telephone and other communications.
4. Blue: Water systems.
5. Green: Sewer systems.

PART 3 - EXECUTION

3.1 PREPARATION

A. Protect structures, utilities, sidewalks, pavements, and other facilities from damage caused by settlement, lateral movement, undermining, washout, and other hazards created by earthwork operations.

B. Preparation of subgrade for earthwork operations including removal of vegetation, topsoil, debris, obstructions, and deleterious materials from ground surface is specified in Division 31 Section "Site Clearing."

C. Protect and maintain erosion and sedimentation controls, which are specified in Division 31 Section "Site Clearing," during earthwork operations.

D. Provide protective insulating materials to protect subgrades and foundation soils against freezing temperatures or frost.

3.2 DEWATERING

A. Prevent surface water and ground water from entering excavations, from ponding on prepared subgrades, and from flooding Project site and surrounding area.

B. Protect subgrades from softening, undermining, washout, and damage by rain or water accumulation.

1. Reroute surface water runoff away from excavated areas. Do not allow water to accumulate in excavations. Do not use excavated trenches as temporary drainage ditches.
2. Install a dewatering system to keep subgrades dry and convey ground water away from excavations. Maintain until dewatering is no longer required.

3.3 EXPLOSIVES

A. Explosives: Obtain written permission from authorities having jurisdiction and from architect and owner before bringing explosives to Project site or using explosives on Project site.

1. Perform blasting without damaging adjacent structures, property, or site improvements.
2. Perform blasting without weakening the bearing capacity of rock subgrade and with the least-practicable disturbance to rock to remain.

3.4 EXCAVATION, GENERAL

A. Unclassified Excavation: Excavate to subgrade elevations regardless of the character of surface and subsurface conditions encountered. Unclassified excavated materials may include rock, soil materials, and obstructions. No changes in the Contract Sum or the Contract Time will be authorized for rock excavation or removal of obstructions.

1. If excavated materials intended for fill and backfill include unsatisfactory soil materials and rock, replace with satisfactory soil materials.
2. Remove rock to lines and grades indicated to permit installation of permanent construction without exceeding the following dimensions:

a. 24 inches outside of concrete forms other than at footings.
b. 12 inches outside of concrete forms at footings.
c. 6 inches outside of minimum required dimensions of concrete cast against grade.
d. Outside dimensions of concrete walls indicated to be cast against rock without forms or exterior waterproofing treatments.
e. 6 inches beneath bottom of concrete slabs on grade.
f. 6 inches beneath pipe in trenches, and the greater of 24 inches wider than pipe or 42 inches wide.

3.5 EXCAVATION FOR STRUCTURES

A. Excavate to indicated elevations and dimensions within a tolerance of plus or minus 1 inch (25 mm). If applicable, extend excavations a sufficient distance from structures for placing and removing concrete formwork, for installing services and other construction, and for inspections.

1. Excavations for Footings and Foundations: Do not disturb bottom of excavation. Excavate by hand to final grade just before placing concrete reinforcement. Trim bottoms to required lines and grades to leave solid base to receive other work.
2. Pile Foundations: Stop excavations 6 to 12 inches above bottom of pile cap before piles are placed. After piles have been driven, remove loose and displaced material. Excavate to final grade, leaving solid base to receive concrete pile caps.
3. Excavation for Underground Tanks, Basins, and Mechanical or Electrical Utility Structures: Excavate to elevations and dimensions indicated within a tolerance of plus or minus 1 inch. Do not disturb bottom of excavations intended as bearing surfaces.

3.6 EXCAVATION FOR WALKS AND PAVEMENTS

A. Excavate surfaces under walks and pavements to indicated lines, cross sections, elevations, and subgrades.

3.7 EXCAVATION FOR UTILITY TRENCHES

A. Excavate trenches to indicated gradients, lines, depths, and elevations.

1. Beyond building perimeter, excavate trenches to allow installation of top of pipe below frost line.

B. Excavate trenches to uniform widths to provide the following clearance on each side of pipe or conduit. Excavate trench walls vertically from trench bottom to 12 inches higher than top of pipe or conduit, unless otherwise indicated.

1. Clearance: 12 inches each side of pipe or conduit.

C. Trench Bottoms: Excavate and shape trench bottoms to provide uniform bearing and support of pipes and conduit. Shape subgrade to provide continuous support for bells, joints, and barrels of pipes and for joints, fittings, and bodies of conduits. Remove projecting stones and sharp objects along trench subgrade.

1. For pipes and conduit less than 6 inches in nominal diameter and flat-bottomed, multiple-duct conduit units, hand-excavate trench bottoms and support pipe and conduit on an undisturbed subgrade.
2. For pipes and conduit 6 inches or larger in nominal diameter, shape bottom of trench to support bottom 90 degrees of pipe circumference. Fill depressions with tamped sand backfill.
3. Excavate trenches 6 inches deeper than elevation required in rock or other unyielding bearing material to allow for bedding course.

3.8 SUBGRADE INSPECTION

A. Notify Architect when excavations have reached required subgrade.

B. If Architect determines that unsatisfactory soil is present, continue excavation and replace with compacted backfill or fill material as directed.

C. Proof-roll subgrade below the building slabs and pavements with heavy pneumatic-tired equipment to identify soft pockets and areas of excess yielding. Do not proof-roll wet or saturated subgrades.

1. Completely proof-roll subgrade in one direction, repeating proof-rolling in direction perpendicular to first direction. Limit vehicle speed to 3 mph.
2. Proof-roll with a loaded 10-wheel, tandem-axle dump truck weighing not less than 15 tons or vehicle with similar unit axel weight.
3. Excavate soft spots, unsatisfactory soils, and areas of excessive pumping or rutting, as determined by Architect, and replace with compacted backfill or fill as directed.

D. Authorized additional excavation and replacement material will be paid for according to Contract provisions for unit prices and changes in the Work.

E. Reconstruct subgrades damaged by freezing temperatures, frost, rain, accumulated water, or construction activities, as directed by Architect, without additional compensation.

3.9 UNAUTHORIZED EXCAVATION

A. Fill unauthorized excavation under foundations or wall footings by extending bottom elevation of concrete foundation or footing to excavation bottom, without altering top elevation. Lean concrete fill, with 28-day compressive strength of 2500 psi, may be used when approved by Architect.

1. Fill unauthorized excavations under other construction or utility pipe as directed by Architect.

3.10 STORAGE OF SOIL MATERIALS

A. Stockpile borrow soil materials and excavated satisfactory soil materials without intermixing. Place, grade, and shape stockpiles to drain surface water. Cover to prevent windblown dust.

1. Stockpile soil materials away from edge of excavations. Do not store within drip line of remaining trees.

3.11 BACKFILL

A. Place and compact backfill in excavations promptly, but not before completing the following:

1. Construction below finish grade including, where applicable, subdrainage, dampproofing, waterproofing, and perimeter insulation.
2. Surveying locations of underground utilities for Record Documents.
3. Testing and inspecting underground utilities.
4. Removing concrete formwork.
5. Removing trash and debris.
6. Removing temporary shoring and bracing, and sheeting.
7. Installing permanent or temporary horizontal bracing on horizontally supported walls.

B. Place backfill on subgrades free of mud, frost, snow, or ice.

3.12 UTILITY TRENCH BACKFILL

A. Place backfill on subgrades free of mud, frost, snow, or ice.

B. Place and compact bedding course on trench bottoms and where indicated. Shape bedding course to provide continuous support for bells, joints, and barrels of pipes and for joints, fittings, and bodies of conduits.

C. Backfill trenches excavated under footings and within 18 inches of bottom of footings with satisfactory soil; fill with concrete to elevation of bottom of footings. Concrete is specified in Division 03 Section "Cast-in-Place Concrete."

D. Provide 4-inch- thick, concrete-base slab support for piping or conduit less than 12 inches below surface of roadways. After installing and testing, completely encase piping or conduit in a minimum of 4 inches of concrete before backfilling or placing roadway subbase.

E. Place and compact initial backfill of subbase material or satisfactory soil, free of particles larger than 1 inch in any dimension, to a height of 12 inches over the utility pipe or conduit.

1. Carefully compact initial backfill under pipe haunches and compact evenly up on both sides and along the full length of utility piping or conduit to avoid damage or displacement of piping or conduit. Coordinate backfilling with utilities testing.

F. Controlled Low-Strength Material: Place initial backfill of controlled low-strength material to a height of 12 inches over the utility pipe or conduit.

G. Backfill voids with satisfactory soil while installing and removing shoring and bracing.

H. Place and compact final backfill of satisfactory soil to final subgrade elevation.

I. Controlled Low-Strength Material: Place final backfill of controlled low-strength material to final subgrade elevation.

J. Install warning tape directly above utilities, 12 inches below finished grade, except 6 inches below subgrade under pavements and slabs.

3.13 SOIL FILL

A. Plow, scarify, bench, or break up sloped surfaces steeper than 1 vertical to 4 horizontal so fill material will bond with existing material.

B. Place and compact fill material in layers to required elevations as follows:

1. Under grass and planted areas, use satisfactory soil material.
2. Under walks and pavements, use satisfactory soil material.
3. Under steps and ramps, use engineered fill.
4. Under building slabs, use engineered fill.
5. Under footings and foundations, use engineered fill.

C. Place soil fill on subgrades free of mud, frost, snow, or ice.

3.14 GEOFOAM FILL

A. Place a leveling course of sand, 2 inches thick, over subgrade. Finish leveling course to a tolerance of 1/2 inch when tested with a 10-foot straightedge.

1. Place leveling course on subgrades free of mud, frost, snow, or ice.

B. Install geofoam blocks in layers with abutting edges and ends and with the long dimension of each block at right angles to blocks in each subsequent layer. Offset joints of blocks in successive layers.

C. Install geofoam connectors at each layer of geofoam to resist horizontal displacement according to geofoam manufacturer's written instructions.

D. Cover geofoam with subdrainage or separation geotextile before placing overlying soil materials.

3.15 SOIL MOISTURE CONTROL

A. Uniformly moisten or aerate subgrade and each subsequent fill or backfill soil layer before compaction to within 2 percent of optimum moisture content.

1. Do not place backfill or fill soil material on surfaces that are muddy, frozen, or contain frost or ice.
2. Remove and replace, or scarify and air dry otherwise satisfactory soil material that exceeds optimum moisture content by 2 percent and is too wet to compact to specified dry unit weight.

3.16 COMPACTION OF SOIL BACKFILLS AND FILLS

A. Place backfill and fill soil materials in layers not more than 12-inches in loose depth for material compacted by heavy compaction equipment, and not more than 4 inches in loose depth for material compacted by hand-operated tampers. Reduce loose depths as needed to achieve required compactions.

B. Place backfill and fill soil materials evenly on all sides of structures to required elevations, and uniformly along the full length of each structure.

C. Compact soil materials to not less than the following percentages of maximum dry unit weight according to ASTM D 698 or ASTM D 1557:

1. Under structures, building slabs, steps, and pavements, scarify and recompact top 12 inches of existing subgrade and each layer of backfill or fill soil material at 95 percent.
2. Under walkways, scarify and recompact top 6 inches below subgrade and compact each layer of backfill or fill soil material at 95 percent.
3. Under lawn or unpaved areas, scarify and recompact top 6 inches below subgrade and compact each layer of backfill or fill soil material at 85 percent.
4. For utility trenches, compact each layer of initial and final backfill soil material at 85 percent if in landscaping areas or 95 percent if under structures, pavements, or walks.

3.17 GRADING

A. General: Uniformly grade areas to a smooth surface, free of irregular surface changes. Comply with compaction requirements and grade to cross sections, lines, and elevations indicated.

1. Provide a smooth transition between adjacent existing grades and new grades.
2. Cut out soft spots, fill low spots, and trim high spots to comply with required surface tolerances.

B. Site Grading: Slope grades to direct water away from buildings and to prevent ponding. Finish subgrades to required elevations within the following tolerances:

1. Lawn or Unpaved Areas: Plus or minus 1 inch.
2. Walks: Plus or minus 1 inch
3. Pavements: Plus or minus 1/2 inch

C. Grading inside Building Lines: Finish subgrade to a tolerance of 1/2 inch when tested with a 10-foot straightedge.

3.18 SUBSURFACE DRAINAGE

A. Subdrainage Pipe: Specified in Division 33 Section "Subdrainage."

B. Subsurface Drain: Place subsurface drainage geotextile around perimeter of subdrainage trench. Place a 6-inch course of filter material on subsurface drainage geotextile to support subdrainage pipe. Encase subdrainage pipe in a minimum of 12 inches of filter material, placed in compacted layers 6 inches thick, and wrap in subsurface drainage geotextile, overlapping sides and ends at least 6 inches.

1. Compact each filter material layer to 85 percent of maximum dry unit weight according to ASTM D 698 with a minimum of two passes of a plate-type vibratory compactor.

C. Drainage Backfill: Place and compact filter material over subsurface drain, in width indicated, to within 12 inches of final subgrade, in compacted layers 6 inches thick. Overlay drainage backfill with 1 layer of subsurface drainage geotextile, overlapping sides and ends at least 6 inches.

1. Compact each filter material layer to 85 percent of maximum dry unit weight according to ASTM D 698 with a minimum of two passes of a plate-type vibratory compactor].
2. Place and compact impervious fill over drainage backfill in 6-inch- thick compacted layers to final subgrade.

3.19 SUBBASE AND BASE COURSES

A. Place subbase and base course on subgrades free of mud, frost, snow, or ice.

B. On prepared subgrade, place subbase and base course under pavements and walks as follows:

1. Install separation geotextile on prepared subgrade according to manufacturer's written instructions, overlapping sides and ends where called for on details and on plans.
2. Place base course material over subbase course under hot-mix asphalt pavement.
3. Shape subbase and base course to required crown elevations and cross-slope grades.
4. Place subbase and base course 6 inches or less in compacted thickness in a single layer.
5. Place subbase and base course that exceeds 6 inches in compacted thickness in layers of equal thickness, with no compacted layer more than 6 inches thick or less than 3 inches thick.
6. Compact subbase and base course at optimum moisture content to required grades, lines, cross sections, and thickness to not less than 95 percent of maximum dry unit weight according to ASTM D 698 or ASTM D 1557.

C. Pavement Shoulders: Place shoulders along edges of subbase and base course to prevent lateral movement. Construct shoulders, at least 12 inches wide, of satisfactory soil materials and compact simultaneously with each subbase and base layer to not less than 95 percent of maximum dry unit weight according to ASTM D 698 or ASTM D 1557 where called for on project plans.

3.20 DRAINAGE COURSE

A. Place drainage course on subgrades free of mud, frost, snow, or ice.

B. On prepared subgrade, place and compact drainage course under cast-in-place concrete slabs-on-grade as follows:

1. Install subdrainage geotextile on prepared subgrade according to manufacturer's written instructions, overlapping sides and ends.
2. Place drainage course 6 inches or less in compacted thickness in a single layer.
3. Place drainage course that exceeds 6 inches in compacted thickness in layers of equal thickness, with no compacted layer more than 6 inches thick or less than 3 inches thick.
4. Compact each layer of drainage course to required cross sections and thicknesses to not less than 95 percent of maximum dry unit weight according to ASTM D 698.

3.21 FIELD QUALITY CONTROL

A. Testing Agency: Owner will engage a qualified independent geotechnical engineering testing agency to perform field quality-control testing.

B. Allow testing agency to inspect and test subgrades and each fill or backfill layer. Proceed with subsequent earthwork only after test results for previously completed work comply with requirements.

C. Footing Subgrade: At footing subgrades, at least one test of each soil stratum will be performed to verify design bearing capacities. Subsequent verification and approval of other footing subgrades may be based on a visual comparison of subgrade with tested subgrade when approved by Architect.

D. Testing agency will test compaction of soils in place according to ASTM D 1556, ASTM D 2167, ASTM D 2922, and ASTM D 2937, as applicable. Tests will be performed at the following locations and frequencies:

1. Paved and Building Slab Areas: At subgrade and at each compacted fill and backfill layer, at least 1 test for every 2000 sq. ft. or less of paved area or building slab, but in no case fewer than 3 tests.
2. Foundation Wall Backfill: At each compacted backfill layer, at least 1 test for each 100 feet or less of wall length, but no fewer than 2 tests.

3. Trench Backfill: At each compacted initial and final backfill layer, at least 1 test for each 150 feet or less of trench length, but no fewer than 2 tests.

E. When testing agency reports that subgrades, fills, or backfills have not achieved degree of compaction specified, scarify and moisten or aerate, or remove and replace soil to depth required; recompact and retest until specified compaction is obtained.

3.22 PROTECTION

A. Protecting Graded Areas: Protect newly graded areas from traffic, freezing, and erosion. Keep free of trash and debris.

B. Repair and reestablish grades to specified tolerances where completed or partially completed surfaces become eroded, rutted, settled, or where they lose compaction due to subsequent construction operations or weather conditions.

1. Scarify or remove and replace soil material to depth as directed by Architect; reshape and recompact.

C. Where settling occurs before Project correction period elapses, remove finished surfacing, backfill with additional soil material, compact, and reconstruct surfacing.

1. Restore appearance, quality, and condition of finished surfacing to match adjacent work, and eliminate evidence of restoration to greatest extent possible.

3.23 DISPOSAL OF SURPLUS AND WASTE MATERIALS

A. Disposal: Remove surplus satisfactory soil and waste material, including unsatisfactory soil, trash, and debris, and legally dispose of it off Owner's property.

B. Disposal: Transport surplus satisfactory soil to designated storage areas on Owner's property. Stockpile or spread soil as directed by Architect.

1. Remove waste material, including unsatisfactory soil, trash, and debris, and legally dispose of it off Owner's property.

END OF SECTION 312000

THIS PAGE LEFT INTENTIONALLY BLANK

SECTION 321216 ASPHALT PAVING

PART 1 - GENERAL

1.1 RELATED DOCUMENTS

A. Drawings and general provisions of the Contract, including General and Supplementary Conditions and Division 01 Specification Sections, apply to this Section.

1.2 SUMMARY

A. Section Includes:

1. Cold milling of existing hot-mix asphalt pavement.
2. Hot-mix asphalt patching.
3. Hot-mix asphalt paving.
4. Hot-mix asphalt paving overlay.
5. Asphalt surface treatments.
6. Pavement-marking paint.
7. Traffic-calming devices.
8. Imprinted asphalt.

B. Related Sections:

1. Division 02 Section "Structure Demolition" for demolition, removal, and recycling of existing asphalt pavements, and for geotextiles that are not embedded within courses of asphalt paving.
2. Division 31 Section "Earth Moving" for aggregate subbase and base courses and for aggregate pavement shoulders.
3. Division 32 Sections for other paving installed as part of crosswalks in asphalt pavement areas.
4. Division 32 Section "Concrete Paving Joint Sealants" for joint sealants and fillers at paving terminations.
5. Division 32 Section "Unit Paving" for bituminous setting bed for pavers.

1.3 UNIT PRICES

A. Work of this Section is affected by unit prices and as defined in Division 1.

1.4 DEFINITION

A. Hot-Mix Asphalt Paving Terminology: Refer to ASTM D 8 for definitions of terms.

1.5 SUBMITTALS

A. Product Data: For each type of product indicated. Include technical data and tested physical and performance properties.

1. Job-Mix Designs: Certification, by authorities having jurisdiction, of approval of each job mix proposed for the Work.
2. Job-Mix Designs: For each job mix proposed for the Work.

B. Shop Drawings: Indicate pavement markings, lane separations, and defined parking spaces. Indicate, with international symbol of accessibility, spaces allocated for people with disabilities.

C. Samples: For each paving fabric, 12 by 12 inches minimum if used.

D. Samples for Verification: For the following products, in manufacturer's standard sizes unless otherwise indicated:

1. Each paving fabric, 12 by 12 inches minimum.
2. Each type and color of preformed traffic-calming device.
3. Each pattern and color of imprinted asphalt and precut marking material.

E. Qualification Data: For qualified manufacturer and Installer.

F. Material Certificates: For each paving material, from manufacturer.

G. Material Test Reports: For each paving material.

1.6 QUALITY ASSURANCE

A. Manufacturer Qualifications: Provide copy of manufactures experience for verification of qualifications.

B. Installer Qualifications: Imprinted-asphalt manufacturer's authorized installer who is trained and approved for installation of imprinted asphalt required for this Project.

C. Testing Agency Qualifications: Qualified according to ASTM D 3666 for testing indicated.

D. Regulatory Requirements: Comply with materials, workmanship, and other applicable requirements of city and DOT for asphalt paving work.

1. Measurement and payment provisions and safety program submittals included in standard specifications do not apply to this Section.

E. Preinstallation Conference: Conduct conference at Project site

1. Review methods and procedures related to hot-mix asphalt paving including, but not limited to, the following:

a. Review proposed sources of paving materials, including capabilities and location of plant that will manufacture hot-mix asphalt.
b. Review condition of subgrade and preparatory work.
c. Review requirements for protecting paving work, including restriction of traffic during installation period and for remainder of construction period.
d. Review and finalize construction schedule and verify availability of materials, Installer's personnel, equipment, and facilities needed to make progress and avoid delays.

1.7 DELIVERY, STORAGE, AND HANDLING

A. Deliver pavement-marking materials to Project site in original packages with seals unbroken and bearing manufacturer's labels containing brand name and type of material, date of manufacture, and directions for storage.

B. Store pavement-marking materials in a clean, dry, protected location within temperature range required by manufacturer. Protect stored materials from direct sunlight.

1.8 PROJECT CONDITIONS

A. Environmental Limitations: Do not apply asphalt materials if subgrade is wet or excessively damp, if rain is imminent or expected before time required for adequate cure, or if the following conditions are not met:

1. Prime Coat: Minimum surface temperature of 60 deg F. Not used if paving takes place within 48 hours of final grading and final compaction of road base.
2. Tack Coat: Minimum surface temperature of 60 deg F.
3. Slurry Coat: Comply with weather limitations in ASTM D 3910.
4. Asphalt Base Course: Minimum surface temperature of 40 deg F and rising at time of placement.
5. Asphalt Surface Course: Minimum surface temperature of 60 deg F at time of placement.

B. Pavement-Marking Paint: Proceed with pavement marking only on clean, dry surfaces and at a minimum ambient or surface temperature of 40 deg F for oil-based materials 55 deg F for water-based materials, and not exceeding 95 deg F.

C. Imprinted Asphalt Paving: Proceed with coating imprinted pavement only when air temperature is at least 50 deg F and rising and will not drop below 50 deg F within 8 hours of coating application. Proceed only if no precipitation is expected within two hours after applying the final layer of coating.

PART 2 - PRODUCTS

2.1 AGGREGATES

A. General: Use materials and gradations that have performed satisfactorily in previous installations.

B. Coarse Aggregate: ASTM D 692, sound; angular crushed stone, crushed gravel, or cured, crushed blast-furnace slag.

C. Fine Aggregate: ASTM D 1073 or AASHTO M 29, sharp-edged natural sand or sand prepared from stone, gravel, cured blast-furnace slag, or combinations thereof.

1. For hot-mix asphalt, limit natural sand to a maximum of 20 percent by weight of the total aggregate mass.

D. Mineral Filler: ASTM D 242 or AASHTO M 17, rock or slag dust, hydraulic cement, or other inert material.

2.2 ASPHALT MATERIALS

A. Asphalt Cement: AC 20 per ASTM D 3381 for viscosity-graded material except use ductility at 39.2 deg. F., >5 for AC 20 and delete the loss on heating requirement on residue from “Thin-Film Oven Test”.

B. Prime Coat: Not required if paving is done within 48 hours of final compaction.

C. Tack Coat: ASTM D 977 or AASHTO M 140 emulsified asphalt, or ASTM D 2397 or AASHTO M 208 cationic emulsified asphalt, slow setting, diluted in water, of suitable grade and consistency for application.

D. Fog Seal: ASTM D 977 or AASHTO M 140 emulsified asphalt, or ASTM D 2397 or AASHTO M 208 cationic emulsified asphalt, slow setting, factory diluted in water, of suitable grade and consistency for application.

E. Water: Potable.

F. Undersealing Asphalt: ASTM D 3141, pumping consistency.

2.3 AUXILIARY MATERIALS

A. Herbicide: Commercial chemical for weed control, registered by the EPA. Provide in granular, liquid, or wettable powder form.

B. Sand: ASTM D 1073 or AASHTO M 29, Grade Nos. 2 or 3.

C. Paving Geotextile: AASHTO M 288, nonwoven polypropylene; resistant to chemical attack, rot, and mildew; and specifically designed for paving applications.

D. Joint Sealant: ASTM D 6690 or AASHTO M 324, Type I Type II or III Type IV, hot-applied, single-component, polymer-modified bituminous sealant.

E. Pavement-Marking Paint: Alkyd-resin type, lead and chromate free, ready mixed, complying with AASHTO M 248, Type N, Type F, and Type S; colors complying with FS TT-P-1952.

1. Color: White, Yellow, Blue, and as indicated.

F. Pavement-Marking Paint: MPI #32 Alkyd Traffic Marking Paint.

1. Color: White, Yellow, Blue, and As indicated.

G. Pavement-Marking Paint: Latex, waterborne emulsion, lead and chromate free, ready mixed, complying with FS TT-P-1952, Type II, with drying time of less than 45 minutes.

1. Color: White, Yellow, Blue, and As indicated.

H. Pavement-Marking Paint: MPI #97 Latex Traffic Marking Paint.

1. Color: White, Yellow, Blue, and As indicated.

I. Glass Beads: AASHTO M 247, Type 1.

J. Wheel Stops: Precast, air-entrained concrete, 2500-psi minimum compressive strength, 4-1/2 inches high by 9 inches wide by 72 inches. Provide chamfered corners, drainage slots on underside, and holes for anchoring to substrate.

1. Dowels: Galvanized steel, 3/4-inch diameter, 20-inch minimum length.

2.4 MIXES

A. Hot-Mix Asphalt: Dense, hot-laid, hot-mix asphalt plant mixes approved by authorities having jurisdiction; designed according to procedures in AI MS-2, "Mix Design Methods for Asphalt Concrete and Other Hot-Mix Types"; and complying with the following requirements:

1. Provide mixes with a history of satisfactory performance in geographical area where Project is located. Provide mix with the following characteristics:
   a. Number of compaction blows each end of specimen: 50.
   b. Satiability based on ASTM D5581: 1200 minimum.
   c. Flow in 0.01-inch units per ASTM D5581: 10-18.
   d. Voids in mineral aggregate VMA: 14.
   e. The percentage of bituminous material by weight added to aggregate will be between 4% and 7% of the weight of the bituminous mixture.

2. Surface Course: 3-inch minimum compacted thickness and as indicated on the drawings with aggregate meeting the following gradation table:
   ¾ inch 100

½ inch	74-99
3/8 inch	69-91
No. 4	49-65
No. 8	33-47
No. 16	21-35
No. 50	6-18
No. 200	2-6

B. Emulsified-Asphalt Slurry: ASTM D 3910, Type 1.

PART 3 - EXECUTION

3.1 EXAMINATION

A. Verify that subgrade is dry and in suitable condition to begin paving.

B. Verify that the road base has been properly compacted and is at the correct line, grade, and slope.

C. Verify that the road base thickness is as indicated on the project plans.

D. Verify that sufficient depth at curbs, walks, lips and other vertical edges is available to place the required thickness of compacted asphalt.

E. Proof-roll subgrade below pavements with heavy pneumatic-tired equipment to identify soft pockets and areas of excess yielding. Do not proof-roll wet or saturated subgrades.

1. Completely proof-roll subgrade in one direction. Limit vehicle speed to 3 mph.
2. Proof roll with a loaded 10-wheel, tandem-axle dump truck weighing not less than 15 tons or other vehicle with similar axel weight.
3. Excavate soft spots, unsatisfactory soils, and areas of excessive pumping or rutting, as determined by Architect, and replace with compacted backfill or fill as directed.

F. Proceed with paving only after unsatisfactory conditions have been corrected.

G. Verify that utilities, traffic loop detectors, and other items requiring a cut and installation beneath the asphalt surface have been completed and that asphalt surface has been repaired flush with adjacent asphalt prior to beginning installation of imprinted asphalt.

3.2 PATCHING

A. Hot-Mix Asphalt Pavement: Saw cut perimeter of patch and excavate existing pavement section to sound base. Excavate rectangular or trapezoidal patches, extending 12 inches into adjacent sound pavement, unless otherwise indicated. Cut excavation faces vertically. Remove excavated material. Recompact existing unbound-aggregate base course to form new subgrade.

B. Portland Cement Concrete Pavement: Break cracked slabs and roll as required to reseat concrete pieces firmly.

1. Pump hot undersealing asphalt under rocking slab until slab is stabilized or, if necessary, crack slab into pieces and roll to reseat pieces firmly.
2. Remove disintegrated or badly cracked pavement. Excavate rectangular or trapezoidal patches, extending into adjacent sound pavement, unless otherwise indicated. Cut excavation faces vertically. Recompact existing unbound-aggregate base course to form new subgrade.

C. Tack Coat: Apply uniformly to vertical surfaces abutting or projecting into new, hot-mix asphalt paving at a rate of 0.05 to 0.15 gal./sq. yd.

1. Allow tack coat to cure undisturbed before applying hot-mix asphalt paving.
2. Avoid smearing or staining adjoining surfaces, appurtenances, and surroundings. Remove spillages and clean affected surfaces.

D. Patching: Fill excavated pavements with hot-mix asphalt base mix for full thickness of patch and, while still hot, compact flush with adjacent surface.

E. Patching: Partially fill excavated pavements with hot-mix asphalt base mix and, while still hot, compact. Cover asphalt base course with compacted, hot-mix surface layer finished flush with adjacent surfaces.

3.3 REPAIRS

A. Leveling Course: Install and compact leveling course consisting of hot-mix asphalt surface course to level sags and fill depressions deeper than 1 inch in existing pavements.

1. Install leveling wedges in compacted lifts not exceeding 3 inches thick.

B. Crack and Joint Filling: Remove existing joint filler material from cracks or joints to a depth of 1/4 inch.

1. Clean cracks and joints in existing hot-mix asphalt pavement.
2. Use emulsified-asphalt slurry to seal cracks and joints less than 1/4 inch wide. Fill flush with surface of existing pavement and remove excess.
3. Use hot-applied joint sealant to seal cracks and joints more than 1/4 inch wide. Fill flush with surface of existing pavement and remove excess.

3.4 SURFACE PREPARATION

A. General: Immediately before placing asphalt materials, remove loose and deleterious material from substrate surfaces. Ensure that prepared subgrade is ready to receive paving.

B. Herbicide Treatment: Not used.

C. Prime Coat: Not use if paving takes place not more than 48 hours after final compaction and grading of road bases. If paving must be delayed significantly, re-grade and re-compact road base or apply Prime Coat. Apply uniformly over surface of compacted unbound-aggregate base course at a rate of 0.15 to 0.50 gal./sq. yd. Apply enough material to penetrate and seal but not flood surface. Allow prime coat to cure.

1. If prime coat is not entirely absorbed within 24 hours after application, spread sand over surface to blot excess asphalt. Use enough sand to prevent pickup under traffic. Remove loose sand by sweeping before pavement is placed and after volatiles have evaporated.
2. Protect primed substrate from damage until ready to receive paving.

D. Tack Coat: Apply uniformly to surfaces of existing pavement at a rate of 0.05 to 0.15 gal./sq. yd.

1. Allow tack coat to cure undisturbed before applying hot-mix asphalt paving.
2. Avoid smearing or staining adjoining surfaces, appurtenances, and surroundings.
3. Remove and replace items damaged by overspray or clean affected surfaces as directed by architect at no additional cost to owner.

3.5 HOT-MIX ASPHALT PLACING

A. Machine place hot-mix asphalt on prepared surface, spread uniformly, and strike off. Place asphalt mix by hand to areas inaccessible to equipment in a manner that prevents segregation of mix. Place each course to required grade, cross section, and thickness when compacted.
   1. Place hot-mix asphalt surface course in single lift if design thickness is less than 3-inches. If design thickness is more than 3-inches, place in multiple lifts with a minimum thickness of 1.5-inches and a maximum thickness of 3-inches.
   2. Spread mix at minimum temperature of 250 deg F.
   3. Begin applying mix along centerline of crown for crowned sections and on high side of one-way slopes unless otherwise indicated.
   4. Regulate paver machine speed to obtain smooth, continuous surface free of pulls and tears in asphalt-paving mat.

B. Place paving in consecutive strips not less than 10 feet wide unless infill edge strips of a lesser width are required.

   1. After first strip has been placed and rolled, place succeeding strips and extend rolling to overlap previous strips. Complete a section of asphalt base course before placing asphalt surface course.

C. Promptly correct surface irregularities in paving course behind paver. Use suitable hand tools to remove excess material forming high spots. Fill depressions with hot-mix asphalt to prevent segregation of mix; use suitable hand tools to smooth surface.

3.6 JOINTS

A. Construct joints to ensure a continuous bond between adjoining paving sections. Construct joints free of depressions, with same texture and smoothness as other sections of hot-mix asphalt course.

   1. Clean contact surfaces and apply tack coat to joints.
   2. Offset longitudinal joints, in successive courses, a minimum of 6 inches.
   3. Offset transverse joints, in successive courses, a minimum of 24 inches.
   4. Construct transverse joints at each point where paver ends a day's work and resumes work at a subsequent time. Construct these joints using either "bulkhead" or "papered" method according to AI MS-22, for both "Ending a Lane" and "Resumption of Paving Operations.".
   5. Compact joints as soon as hot-mix asphalt will bear roller weight without excessive displacement.
   6. Compact asphalt at joints to a density within 2 percent of specified course density.

3.7 COMPACTION

A. General: Begin compaction as soon as placed hot-mix paving will bear roller weight without excessive displacement. Compact hot-mix paving with hot, hand tampers or with vibratory-plate compactors in areas inaccessible to rollers.

   1. Complete compaction before mix temperature cools to 185 deg F.

B. Breakdown Rolling: Complete breakdown or initial rolling immediately after rolling joints and outside edge. Examine surface immediately after breakdown rolling for indicated crown, grade, and smoothness. Correct laydown and rolling operations to comply with requirements.

C. Intermediate Rolling: Begin intermediate rolling immediately after breakdown rolling while hot-mix asphalt is still hot enough to achieve specified density. Continue rolling until hot-mix asphalt course has been uniformly compacted to the following density:

   1. Average Density: 94 percent of reference laboratory density according to ASTM D 6927 or AASHTO T 245, but not less than 92 percent nor greater than 96 percent.

D. Finish Rolling: Finish roll paved surfaces to remove roller marks while hot-mix asphalt is still warm.

E. Edge Shaping: While surface is being compacted and finished, trim edges of pavement to proper alignment. Bevel edges while asphalt is still hot; compact thoroughly.

F. Place asphalt so that final compacted asphalt is even with lip of gutter on curbs that drain away from the curb and gutter (open face or depressed curb and gutter). Place asphalt so that final compacted asphalt is 1/4-inch above lip of gutter on curbs that carry water (slope of parking lot is towards the curb). In transition areas, use extra care to make sure that no ponds, bird baths, or depressions are left after paving.

G. Repairs: Remove paved areas that are defective or contaminated with foreign materials and replace with fresh, hot-mix asphalt. Compact by rolling to specified density and surface smoothness.

H. Protection: After final rolling, do not permit vehicular traffic on pavement until it has cooled and hardened.

I. Erect barricades to protect paving from traffic until mixture has cooled enough not to become marked.

3.8 INSTALLATION TOLERANCES

A. Pavement Thickness: Compact each course to produce the thickness indicated within the following tolerances:
   1. Surface Course: Plus 1/4 inch, no minus.

B. Pavement Surface Smoothness: Compact each course to produce a surface smoothness within the following tolerances as determined by using a 10-foot straightedge applied transversely or longitudinally to paved areas:
   1. Surface Course: 1/8 inch.
   2. Crowned Surfaces: Test with crowned template centered and at right angle to crown. Maximum allowable variance from template is 1/4 inch.

C. After paving is complete, pour water on paved areas and identify ponds, bird baths, and depressions. Identify the same at open face and transition sections of curb and gutter. Remove and replace asphalt, curb and gutter, road base, and or sub-base as necessary to fix ponds, bird baths, or depressions at no additional cost to owner.

3.9 SURFACE TREATMENTS (NOT USED)

~~A. Fog Seals: Apply fog seal at a rate of 0.10 to 0.15 gal./sq. yd. to existing asphalt pavement and allow to cure. With fine sand, lightly dust areas receiving excess fog seal.~~

~~B. Slurry Seals: Apply slurry coat in a uniform thickness according to ASTM D 3910 and allow curing.~~

   ~~1. Roll slurry seal to remove ridges and provide a uniform, smooth surface.~~

3.10 PAVEMENT MARKING

A. Do not apply pavement-marking paint until layout, colors, and placement have been verified with Architect.

B. Allow paving to age for 7 days minimum days before starting pavement marking.

C. Sweep and clean surface to eliminate loose material and dust.

D. Apply paint with mechanical equipment to produce pavement markings, of dimensions indicated, with uniform, straight edges. Apply at manufacturer's recommended rates to provide a minimum wet film thickness of 15 mils.

1. Broadcast glass beads uniformly into wet pavement markings at a rate of 6 lb/gal.

E. Color
1. Yellow: Parking stalls and pedestrian crossings.
2. Blue: Handicap insignia at appropriate stalls.
3. Red: Fire lanes and no parking areas.
4. White: Directional arrows.

3.11 WHEEL STOPS

A. Securely attach wheel stops to pavement with not less than two galvanized-steel dowels embedded at one-quarter to one-third points. Securely install dowels into pavement and bond to wheel stop. Recess head of dowel beneath top of wheel stop.

3.12 FIELD QUALITY CONTROL

A. Testing Agency: Owner will engage a qualified testing agency to perform tests and inspections.

B. Thickness: In-place compacted thickness of hot-mix asphalt courses will be determined according to ASTM D 3549.

C. Surface Smoothness: Finished surface of each hot-mix asphalt course will be tested for compliance with smoothness tolerances.

D. In-Place Density: Testing agency will take samples of uncompacted paving mixtures and compacted pavement according to ASTM D 979 or AASHTO T 168.

1. Reference maximum theoretical density will be determined by averaging results from four samples of hot-mix asphalt-paving mixture delivered daily to site, prepared according to ASTM D 2041, and compacted according to job-mix specifications.
2. In-place density of compacted pavement will be determined by testing core samples according to ASTM D 1188 or ASTM D 2726. Cores will also be measured for compacted thickness. The owner and architect may also direct additional cores to be taken at locations of their choosing to verify final pavement thickness.

a. One core sample will be taken for every 1000 sq. yd. or less of installed pavement, with no fewer than 3 cores taken.
b. Field density of in-place compacted pavement may also be determined by nuclear method according to ASTM D 2950 and correlated with ASTM D 1188 or ASTM D 2726.
c. Coordinate the time and locations of all holes so that cores may be filled.

E. The contractor will replace and compact hot-mix asphalt where core tests were taken.

F. Remove and replace or install additional hot-mix asphalt where test results or measurements indicate that it does not comply with specified requirements.

3.13 DISPOSAL

A. Except for material indicated to be recycled, remove excavated materials from Project site and legally dispose of them in an EPA-approved landfill.

1. Do not allow milled materials to accumulate on-site.

END OF SECTION 321216

THIS PAGE LEFT INTENTIONALLY BLANK

SECTION - 012100 - ALLOWANCES

PART 1 - GENERAL

1.1 RELATED DOCUMENTS

A. Drawings and general provisions of the Contract, including General and Supplementary Conditions and other Division 01 Specification Sections, apply to this Section.

1.2 SUMMARY

A. Section includes administrative and procedural requirements governing allowances.

1. Certain items are specified in the Contract Documents by allowances. Allowances have been established in lieu of additional requirements and to defer selection of actual materials and equipment to a later date when direction will be provided to Contractor. If necessary, additional requirements will be issued by Change Order.

B. Types of allowances include the following:

1. Lump-sum allowances.

C. Related Requirements:

1. Section 012200 "Unit Prices" for procedures for using unit prices.

2. Section 014000 "Quality Requirements" for procedures governing the use of allowances for testing and inspecting.

1.3 SELECTION AND PURCHASE

A. At the earliest practical date after award of the Contract, advise Architect of the date when final selection and purchase of each product or system described by an allowance must be completed to avoid delaying the Work.

B. At Architect's request, obtain proposals for each allowance for use in making final selections. Include recommendations that are relevant to performing the Work.

C. Purchase products and systems selected by Architect from the designated supplier.

1.4 INFORMATIONAL SUBMITTALS

A. Coordinate and process submittals for allowance items in same manner as for other portions of the Work.

1.5 COORDINATION

A. Coordinate allowance items with other portions of the Work. Furnish templates as required to coordinate installation.

1.6 LUMP-SUM ALLOWANCES

A. Allowance shall include cost to Contractor of specific products and materials ordered by Owner or selected by Architect under allowance and shall include taxes, freight and delivery to Project site.

B. **Unless otherwise indicated, Contractor's costs for receiving and handling at Project site, labor, installation, overhead and profit, and similar costs related to products and materials ordered by Owner under allowance shall be included as part of the Contract Sum and not part of the allowance**.

C. Unused Materials: Return unused materials purchased under an allowance to manufacturer or supplier for credit to Owner, after installation has been completed and accepted.

1. If requested by Architect, retain and prepare unused material for storage by Owner. Deliver unused material to Owner's storage space as directed.

1.7 ADJUSTMENT OF ALLOWANCES

A. Allowance Adjustment: To adjust allowance amounts, prepare a Change Order proposal based on the difference between purchase amount and the allowance, multiplied by final measurement of work-in-place where applicable. If applicable, include reasonable allowances for cutting losses, tolerances, mixing wastes, normal product imperfections, and similar margins.

1. Include installation costs in purchase amount only where indicated as part of the allowance.

2. If requested, prepare explanation and documentation to substantiate distribution of overhead costs and other margins claimed.

B. Submit claims for increased costs because of a change in scope or nature of the allowance described in the Contract Documents, whether for the purchase order amount or Contractor's handling, labor, installation, overhead, and profit.

1. Do not include Contractor's or subcontractor's indirect expense in the Change Order cost amount unless it is clearly shown that the nature or extent of work has changed from what could have been foreseen from information in the Contract Documents.

2. No change to Contractor's indirect expense is permitted for selection of higher- or lower-priced materials or systems of the same scope and nature as originally indicated.

PART 2 - PRODUCTS (Not Used)

PART 3 - EXECUTION

3.1 EXAMINATION

A. Examine products covered by an allowance promptly on delivery for damage or defects. Return damaged or defective products to manufacturer for replacement.

3.2 PREPARATION

A. Coordinate materials and their installation for each allowance with related materials and installations to ensure that each allowance item is completely integrated and interfaced with related work.

3.3 SCHEDULE OF ALLOWANCES

A. Allowance No. 1: Lump-Sum Allowance: Include the sum of TBD for installing “Spacesaver’ High Density Storage in rooms 124C, 126B, 132, 205A & 216.

1. This allowance includes a lump sum cost from Spacesaver Intermountain based on State Contract pricing to install new systems in rooms 126B, 124C & 216 and remove and reinstall existing systems into rooms 132 & 205A. **Allowance = $156,532. Note this allowance is part of Alternate #2**

END OF SECTION 012100

Archive Records Storage Elevation

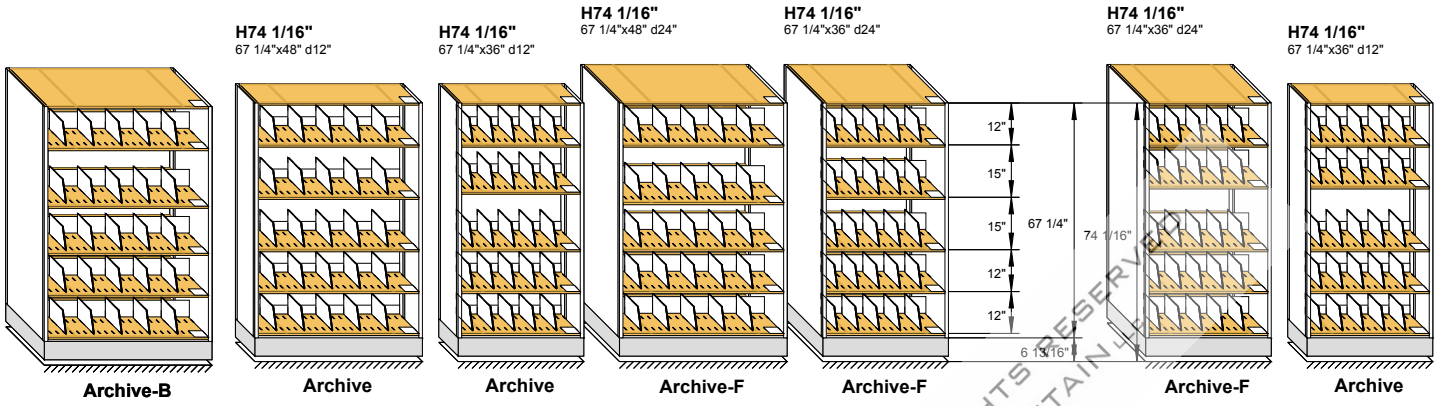

Archive Records

Filing Capacity

Existing Archive Powered System

Actual LFI	5,180"
Nominal LFI	5,460"
Actual LFF	431'8"
Nominal LFF	455'0"

☒ Include Existing

Since the new building ceiling is at 96" This system height will be the maximum height. Another level cannot be achieved.

96" - 2" for the sprinkler- 18" from the bottom of the sprinkler to the top of the shelving = 76" max System height

If the ceiling Height was 108" we would be able to add a level.

COPYRIGHT © ALL RIGHTS RESERVED SPACESAVER INTERMOUNTAIN LLC

SPACESAVER INTERMOUNTAIN LLC

249 South 400 East
Salt Lake City, UT 84111

(801) 363-5882 main
(801) 359-4326 fax

www.SpacesaverIM.com

Project Name:

UT Dept of Health-Medical Examiners Office

Project #: 18400	
Drawn by: kly	
Date Printed: 02/06/2014	
Scale 1:55	Rev level:

APPROVAL
This drawing Approved By:

_____

Dated_____

COPYRIGHT © 2014 SPACESAVER INTERMOUNTAIN. ALL RIGHTS RESERVED

Copyright © 2014 Spacesaver Intermountain. This material is proprietary and confidential, and the disclosure reproduction by photography, film, blueprint or otherwise or incorporation into any information retrieval system without first receiving written approval from Spacesaver Intermountain is expressly prohibited by law.

System Weight Summary Report

Total media weight	0.00	lbs		
Total equipment weight	2,976.05	lbs		
Total picklist weight	0.00	lbs		
Total aisle weight (15 lbs/ft²)	1,235.29	lbs		
Total system (media, equipment and aisle) weight	4,211.34	lbs		
Total Foot-Print area	182.90	ft²		
Total weight load per square foot (avg unit load)	23.03	lbs/ft²		
Maximum Deflection Allowed is:	L/480			
Weight load (line load*) under front rail	1,076.78	lbs	95.36	lbs/ft
Weight load (line load*) under rail no. 2	1,046.48	lbs	92.68	lbs/ft
Weight load (line load*) under back rail	854.80	lbs	75.70	lbs/ft

*Line Load calculations do not include the weight of Floor, Ramp, or Aisles.

Hard-Wired Method

Locate a customer-supplied 4" x 4" junction box near the front of the system and 6" above the top of the shelving. Power supplied to this junction box should be on a dedicated/isolated 120 VAC, 60 Hz, 20-amp circuit, including a dedicated/isolated ground wire to the distribution source. ½" rigid or flexible metallic conduit is required to connect between the customer supplied junction box and the Spacesaver-supplied disconnect/breaker box. The disconnect/breaker box must be secured and grounded to a metal shelving top of the Spacesaver system. The box cover must be screwed in place and the star washers must be used to assure a positive ground connection between box and cover. If needed, two adjoining modules may be connected to one 4" x 4" junction box, if the junction box provides a minimum of two separate circuits.

COPYRIGHT © ALL RIGHTS RESERVED
SPACESAVER INTERMOUNTAIN LLC

SPACESAVER INTERMOUNTAIN LLC
249 South 400 East
Salt Lake City, UT 84111
(801) 363-5882 main
(801) 359-4326 fax
www.SpacesaverIM.com

Project Name:

UT Dept of Health-Medical Examiners Office

Project #: 18400

Drawn by: kly

Date Printed: 02/06/2014

Scale 1:50

Rev level:

APPROVAL
This drawing Approved By: _____

Dated_____

COPYRIGHT © 2014 SPACESAVER INTERMOUNTAIN. ALL RIGHTS RESERVED

Copyright © 2014 Spacesaver Intermountain. This material is proprietary and confidential, and the disclosure reproduction by photography, film, blueprint or otherwise or incorporation into any information retrieval system without first receiving written approval from Spacesaver Intermountain is expressly prohibited by law.

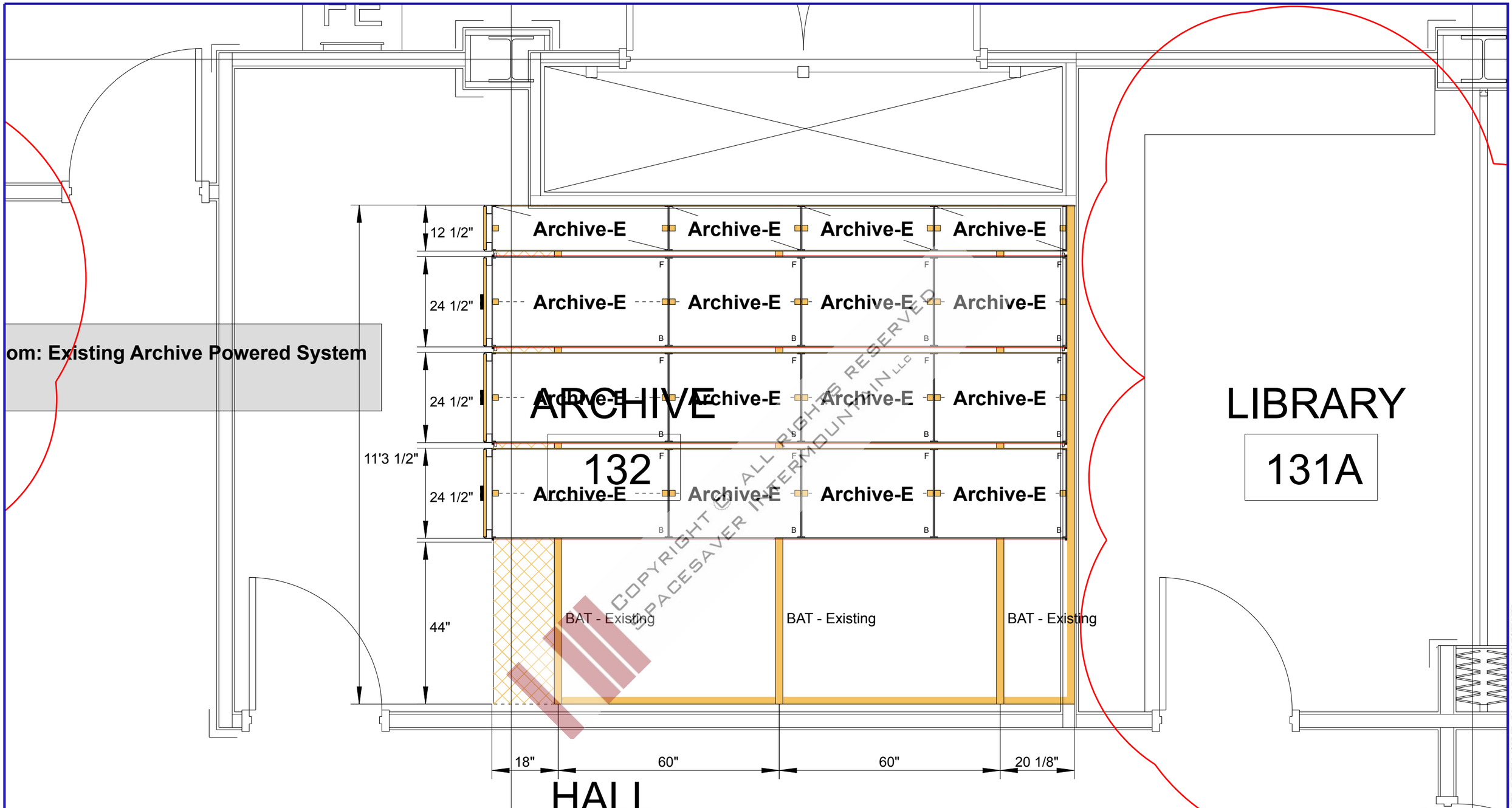

COPYRIGHT © ALL RIGHTS RESERVED SPACESAVER INTERMOUNTAIN LLC

SPACESAVER INTERMOUNTAIN LLC
249 South 400 East
Salt Lake City, UT 84111
(801) 363-5882 main
(801) 359-4326 fax
www.SpacesaverIM.com

Project Name:
UT Dept of Health-Medical Examiners Office

Project #: 18400	
Drawn by: kly	
Date Printed: 02/06/2014	
Scale 1:25	Rev level:

APPROVAL
This drawing Approved By:
_____
Dated_____

COPYRIGHT © 2014 SPACESAVER INTERMOUNTAIN. ALL RIGHTS RESERVED

Copyright © 2014 Spacesaver Intermountain. This material is proprietary and confidential, and the disclosure reproduction by photography, film, blueprint or otherwise or incorporation into any information retrieval system without first receiving written approval from Spacesaver Intermountain is expressly prohibited by law.

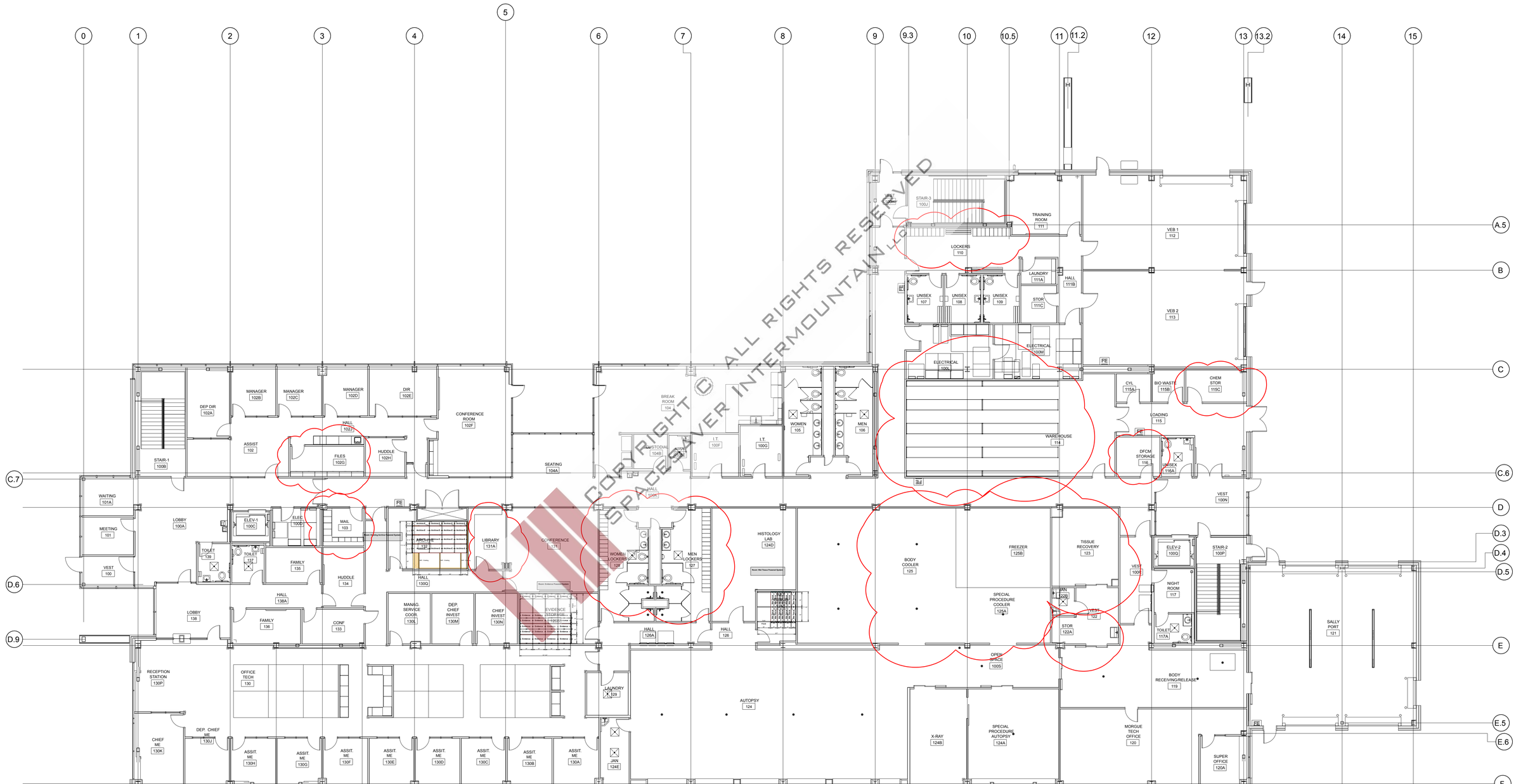

COPYRIGHT © ALL RIGHTS RESERVED
SPACESAVER INTERMOUNTAIN LLC

SPACESAVER INTERMOUNTAIN LLC
249 South 400 East
Salt Lake City, UT 84111
(801) 363-5882 main
(801) 359-4326 fax
www.SpacesaverIM.com

Project Name:
UT Dept of Health-Medical Examiners Office

Project #: 18400	
Drawn by: kly	
Date Printed: 02/06/2014	
Scale 1:130	Rev level:

APPROVAL
This drawing Approved By: _____
Dated_____

COPYRIGHT © 2014 SPACESAVER INTERMOUNTAIN. ALL RIGHTS RESERVED

Copyright © 2014 Spacesaver Intermountain. This material is proprietary and confidential, and the disclosure reproduction by photography, film, blueprint or otherwise or incorporation into any information retrieval system without first receiving written approval from Spacesaver Intermountain is expressly prohibited by law.

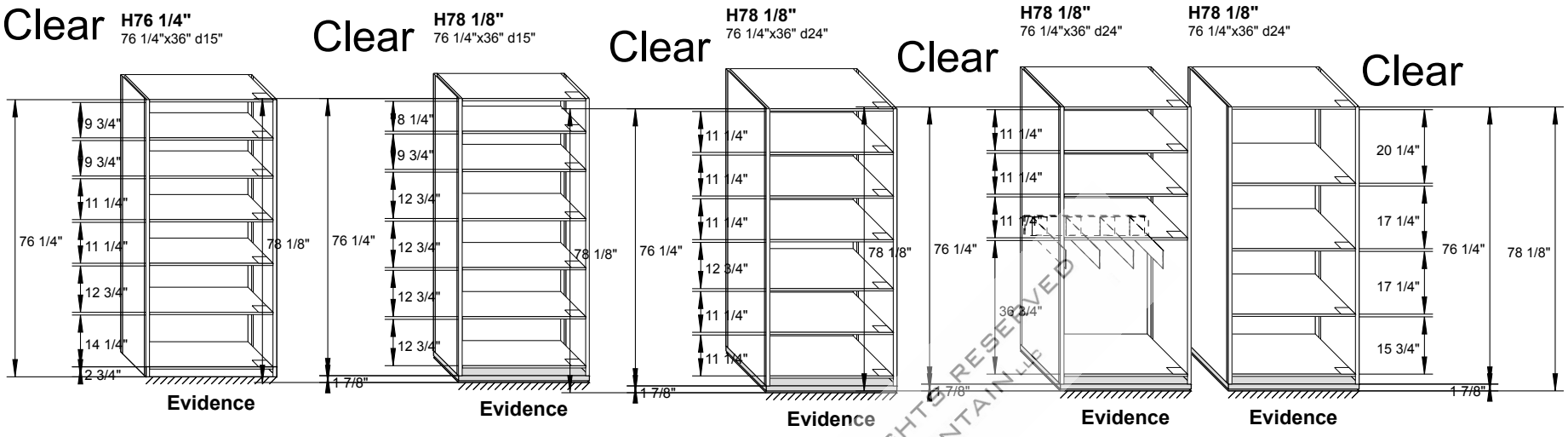

COPYRIGHT © ALL RIGHTS RESERVED
SPACESAVER INTERMOUNTAIN LLC

Evidence Storage Elevations

Filing Capacity

Evidence Powered System

Actual LFI	4,760"
Nominal LFI	5,040"
Actual LFF	396'8"
Nominal LFF	420'0"

☒ Include Existing

SPACESAVER INTERMOUNTAIN LLC

249 South 400 East
Salt Lake City, UT 84111

(801) 363-5882 main
(801) 359-4326 fax

www.SpacesaverIM.com

Project Name:

UT Dept of Health-Medical Examiners Office

Project #: 18400	
Drawn by: kly	
Date Printed: 02/06/2014	
Scale 1:45	Rev level:

APPROVAL
This drawing Approved By:

_____

Dated_____

COPYRIGHT © 2014 SPACESAVER INTERMOUNTAIN. ALL RIGHTS RESERVED

Copyright © 2014 Spacesaver Intermountain. This material is proprietary and confidential, and the disclosure reproduction by photography, film, blueprint or otherwise or incorporation into any information retrieval system without first receiving written approval from Spacesaver Intermountain is expressly prohibited by law.

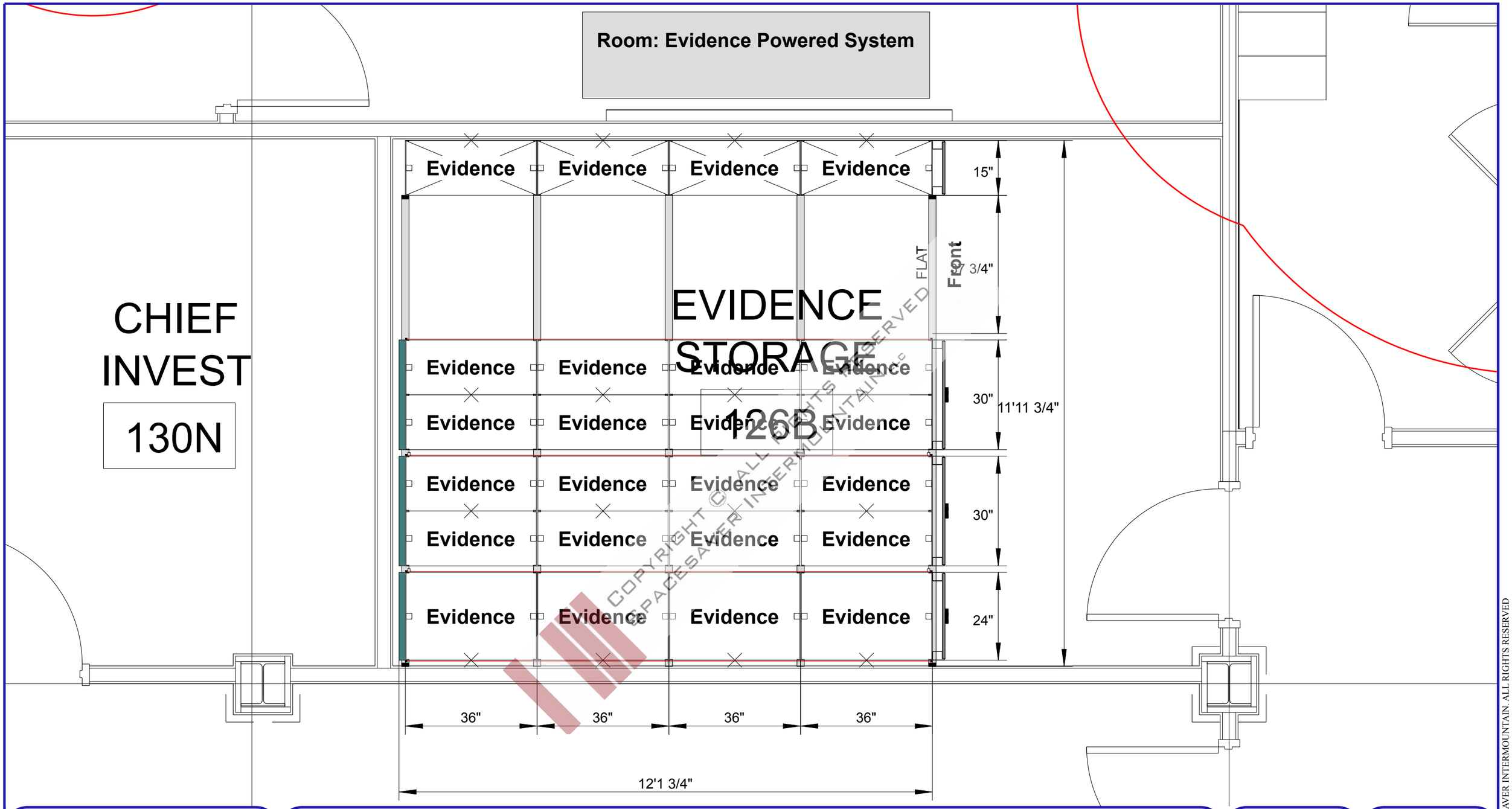

SPACESAVER INTERMOUNTAIN LLC
249 South 400 East
Salt Lake City, UT 84111
(801) 363-5882 main
(801) 359-4326 fax
www.SpacesaverIM.com

Project Name:
UT Dept of Health-Medical Examiners Office

Project #: 18400	
Drawn by: kly	
Date Printed: 02/06/2014	
Scale 1:25	Rev level:

APPROVAL
This drawing Approved By: _____
Dated_____

COPYRIGHT © 2014 SPACESAVER INTERMOUNTAIN. ALL RIGHTS RESERVED

Copyright © 2014 Spacesaver Intermountain. This material is proprietary and confidential, and the disclosure reproduction by photography, film, blueprint or otherwise or incorporation into any information retrieval system without first receiving written approval from Spacesaver Intermountain is expressly prohibited by law.

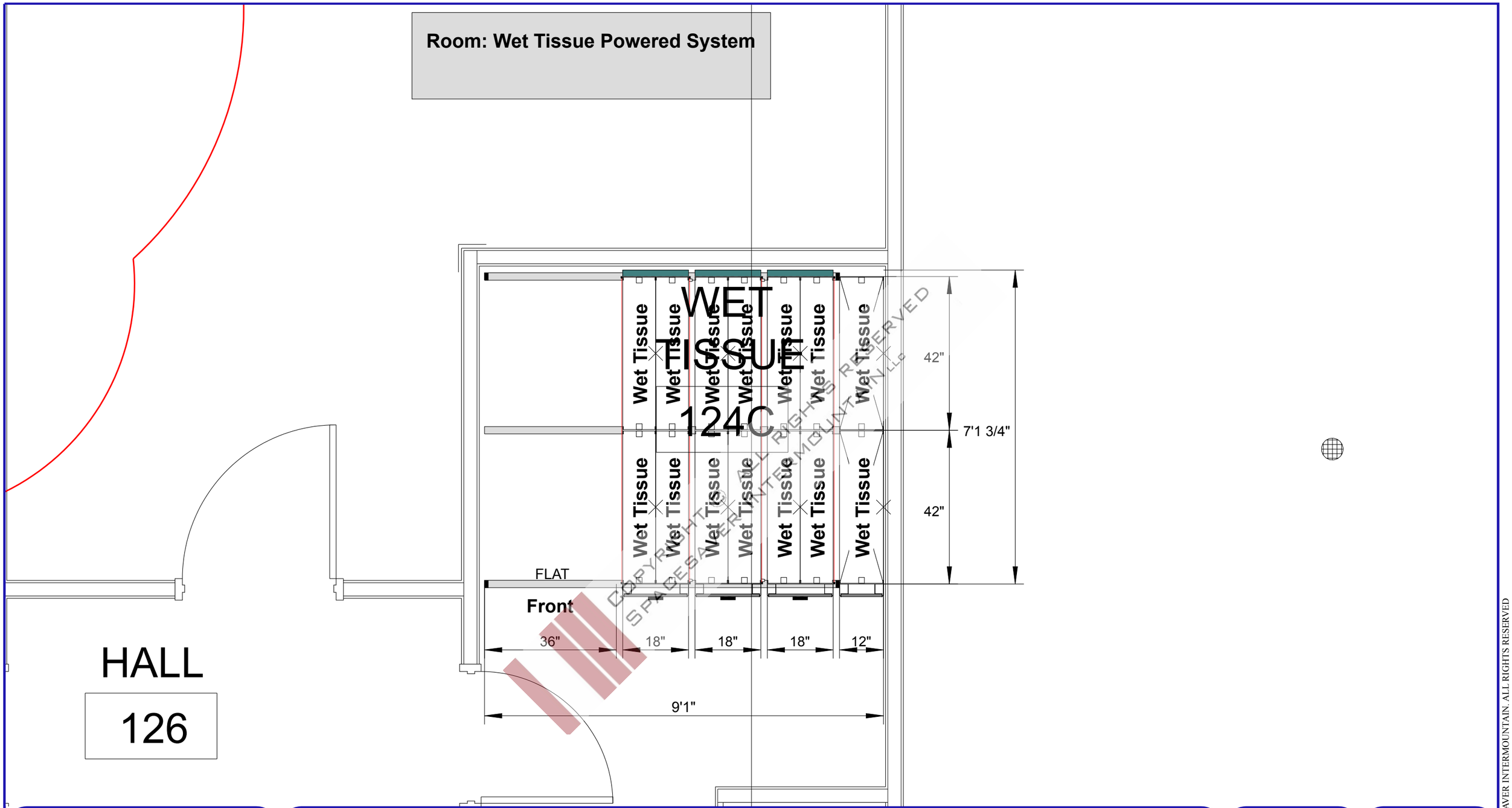

SPACESAVER INTERMOUNTAIN LLC
249 South 400 East
Salt Lake City, UT 84111
(801) 363-5882 main
(801) 359-4326 fax
www.SpacesaverIM.com

Project Name:
UT Dept of Health-Medical Examiners Office

Project #: 18400	
Drawn by: kly	
Date Printed: 02/06/2014	
Scale 1:25	Rev level:

APPROVAL
This drawing Approved By: _____
Dated_____

COPYRIGHT © 2014 SPACESAVER INTERMOUNTAIN. ALL RIGHTS RESERVED

Copyright © 2014 Spacesaver Intermountain. This material is proprietary and confidential, and the disclosure reproduction by photography, film, blueprint or otherwise or incorporation into any information retrieval system without first receiving written approval from Spacesaver Intermountain is expressly prohibited by law.

Tissue Storage Elevation

Clear

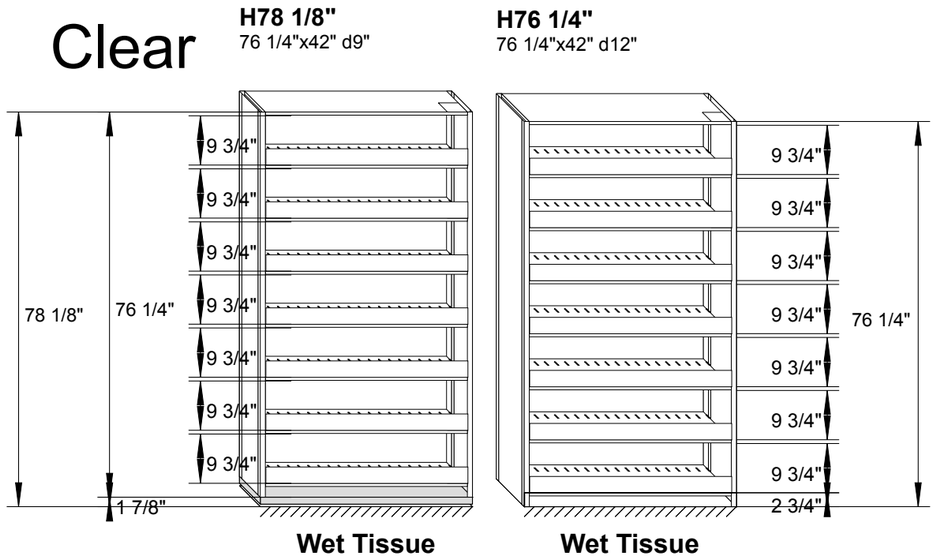

Filing Capacity

Wet Tissue Mechanical Assist System

Actual LFI	3,920"
Nominal LFI	4,116"
Actual LFF	326'8"
Nominal LFF	343'0"

☒ Include Existing

Stacking 10oz sample containers
2 high x 2 deep- 40 containers
per level- 280 per 9" deep section-
Storage for 3.360 10 oz sample containers
in the (12) 9" deep sections. The 12" deep sections
are for the large container's and misc items.

COPYRIGHT © ALL RIGHTS RESERVED SPACESAVER INTERMOUNTAIN LLC

SPACESAVER INTERMOUNTAIN LLC
249 South 400 East
Salt Lake City, UT 84111
(801) 363-5882 main
(801) 359-4326 fax
www.SpacesaverIM.com

Project Name:
UT Dept of Health-Medical Examiners Office

Project #: 18400	
Drawn by: kly	
Date Printed: 02/06/2014	
Scale 1:30	Rev level:

APPROVAL
This drawing Approved By: _____

Dated_____

COPYRIGHT © 2014 SPACESAVER INTERMOUNTAIN. ALL RIGHTS RESERVED

Copyright © 2014 Spacesaver Intermountain. This material is proprietary and confidential, and the disclosure reproduction by photography, film, blueprint or otherwise or incorporation into any information retrieval system without first receiving written approval from Spacesaver Intermountain is expressly prohibited by law.

Room: Wet Tissue Mechanical Assist System

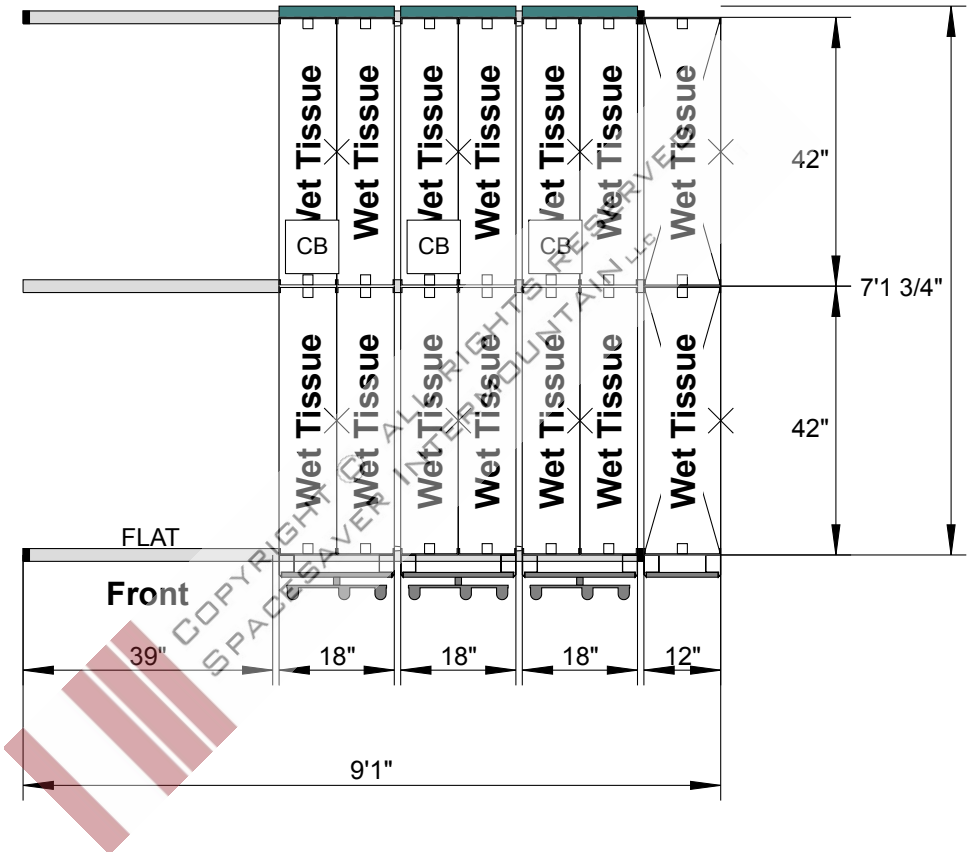

SPACESAVER INTERMOUNTAIN LLC

249 South 400 East
Salt Lake City, UT 84111

(801) 363-5882 main
(801) 359-4326 fax

www.SpacesaverIM.com

Project Name:

UT Dept of Health-Medical Examiners Office

Project #: 18400	
Drawn by: kly	
Date Printed: 02/06/2014	
Scale 1:30	Rev level:

APPROVAL
This drawing Approved By:

_____

Dated_____

COPYRIGHT © 2014 SPACESAVER INTERMOUNTAIN. ALL RIGHTS RESERVED

Copyright © 2014 Spacesaver Intermountain. This material is proprietary and confidential, and the disclosure reproduction by photography, film, blueprint or otherwise or incorporation into any information retrieval system without first receiving written approval from Spacesaver Intermountain is expressly prohibited by law.

Room: Evidence Mechanical Assist System

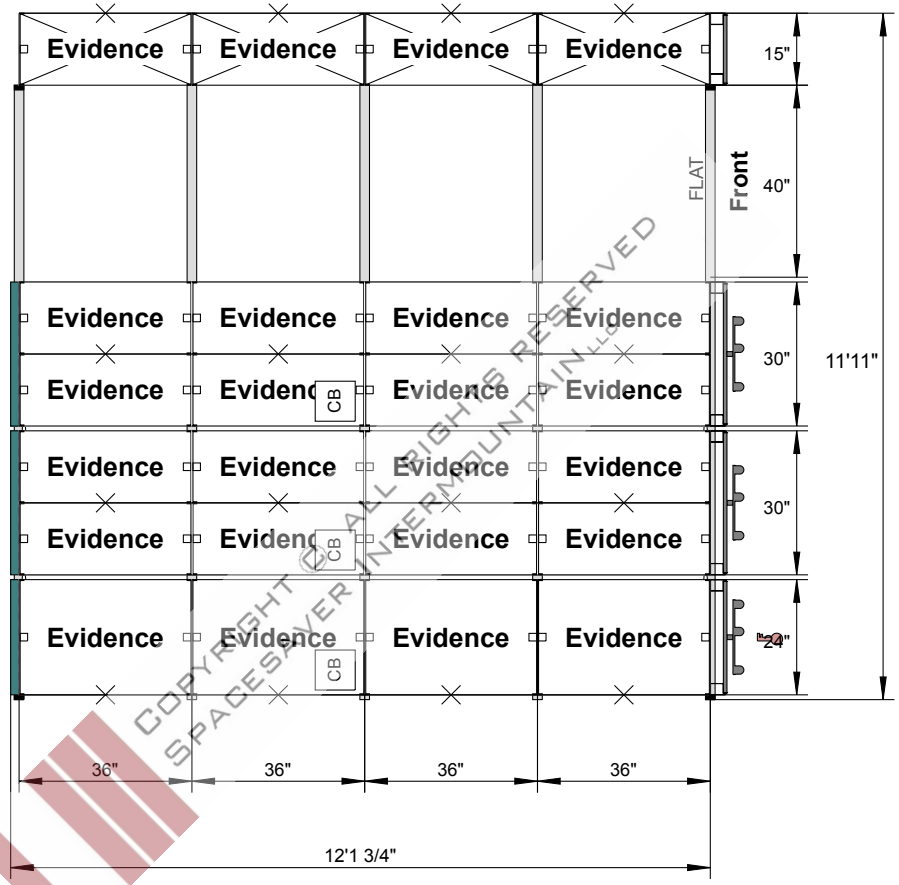

SPACESAVER INTERMOUNTAIN LLC

249 South 400 East
Salt Lake City, UT 84111

(801) 363-5882 main
(801) 359-4326 fax

www.SpacesaverIM.com

Project Name:

UT Dept of Health-Medical Examiners Office

Project #: 18400	
Drawn by: kly	
Date Printed: 02/06/2014	
Scale 1:40	Rev level:

APPROVAL
This drawing Approved By:

_____

Dated_____

COPYRIGHT © 2014 SPACESAVER INTERMOUNTAIN. ALL RIGHTS RESERVED

Copyright © 2014 Spacesaver Intermountain. This material is proprietary and confidential, and the disclosure reproduction by photography, film, blueprint or otherwise or incorporation into any information retrieval system without first receiving written approval from Spacesaver Intermountain is expressly prohibited by law.

ROOM 216 CODIS CONCEPT IMAGE

SPACESAVER INTERMOUNTAIN LLC

249 South 400 East
Salt Lake City, UT 84111

(801) 363-5882 main
(801) 359-4326 fax

www.SpacesaverIM.com

Project Name:

UTAH BUREAU OF FORENSIC SERVICES

Project #: 21390	
Drawn by:	
Date Printed: 02/10/2014	
Scale 3/4" = 1'	Rev level:

APPROVAL
This drawing Approved By:

_____

Dated_____

COPYRIGHT © 2014 SPACESAVER CORPORATION. ALL RIGHTS RESERVED

Copyright © 2014 Spacesaver Corporation. This material is proprietary and confidential, and the disclosure reproduction by photography, film, blueprint or otherwise or incorporation into any information retrieval system without first receiving written approval from Spacesaver Corporation is expressly prohibited by law.

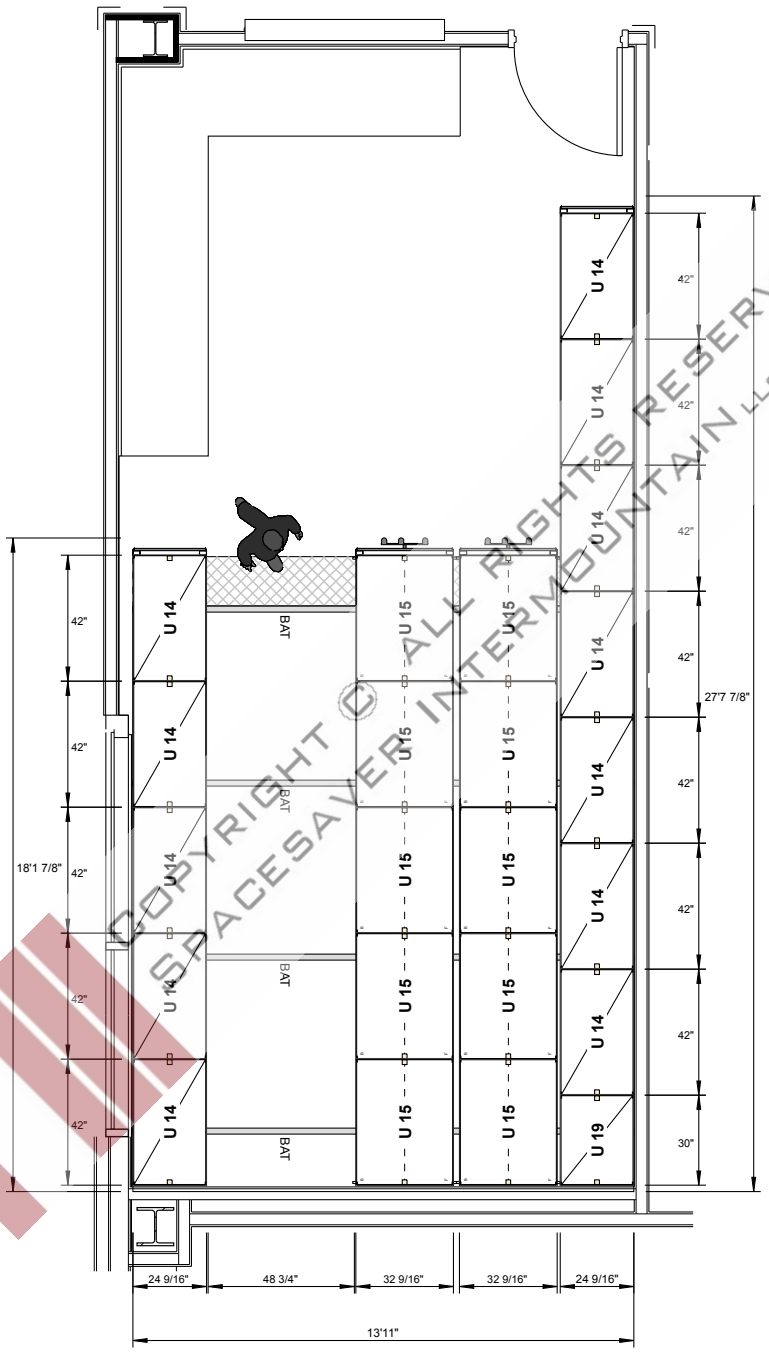

ROOM 216 CODIS

SPACESAVER INTERMOUNTAIN LLC

249 South 400 East
Salt Lake City, UT 84111

(801) 363-5882 main
(801) 359-4326 fax

www.SpacesaverIM.com

Project Name:

UTAH BUREAU OF FORENSIC SERVICES

Project #: 21390

Drawn by:

Date Printed: 02/10/2014

Scale 3/16" = 1'

Rev level:

APPROVAL
This drawing Approved By:

_____

Dated_____

COPYRIGHT © 2014 SPACESAVER CORPORATION. ALL RIGHTS RESERVED

Copyright © 2014 Spacesaver Corporation. This material is proprietary and confidential. Unauthorized reproduction by photography, film, blueprint or otherwise or incorporation into any information retrieval system without first receiving written approval from Spacesaver Corporation is expressly prohibited by law.

H83 1/16"
76 1/4"x30" d24"

H83 1/16"
76 1/4"x42" d24"

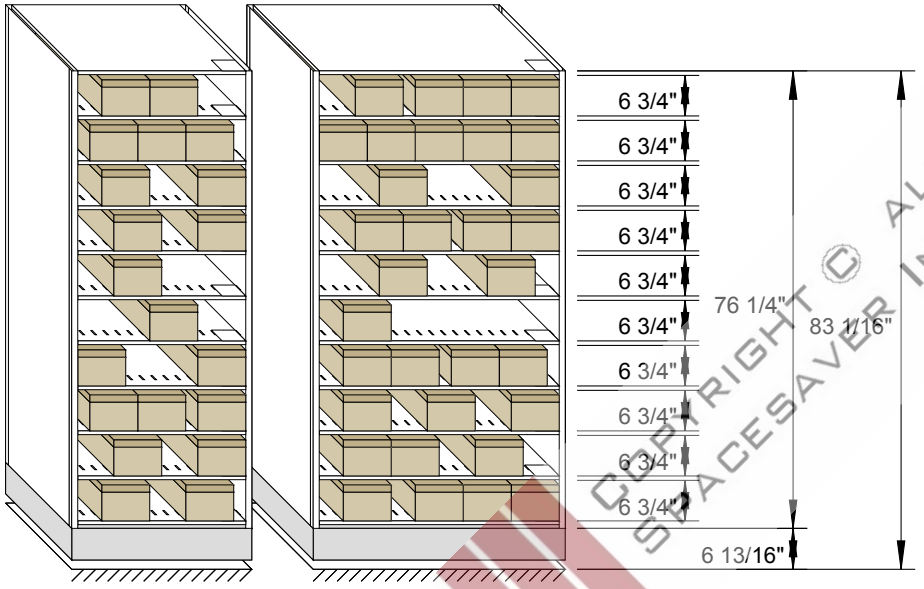

U 19 **U 14**

H83 1/16"
76 1/4"x42" d32"

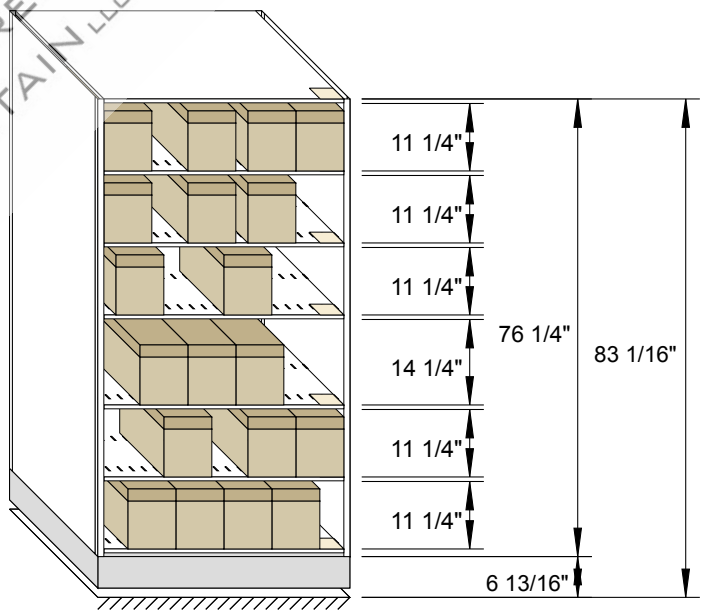

U 15-F

ELEVATIONS

COPYRIGHT © ALL RIGHTS RESERVED
SPACESAVER INTERMOUNTAIN LLC

SPACESAVER INTERMOUNTAIN LLC

249 South 400 East
Salt Lake City, UT 84111

(801) 363-5882 main
(801) 359-4326 fax

www.SpacesaverIM.com

Project Name:

UTAH BUREAU OF FORENSIC SERVICES

Project #: 21390

Drawn by:

Date Printed: 02/10/2014

Scale 3/8" = 1'

Rev level:

APPROVAL
This drawing Approved By:

_____

Dated_____

COPYRIGHT © 2014 SPACESAVER CORPORATION. ALL RIGHTS RESERVED

Copyright © 2014 Spacesaver Corporation. This material is proprietary and confidential, and the disclosure reproduction by photography, film, blueprint or otherwise or incorporation into any information retrieval system without first receiving written approval from Spacesaver Corporation is expressly prohibited by law.

COPYRIGHT © ALL RIGHTS RESERVED
SPACESAVER INTERMOUNTAIN LLC

GUN VAULT CONCEPT IMAGE

SPACESAVER INTERMOUNTAIN LLC

249 South 400 East
Salt Lake City, UT 84111

(801) 363-5882 main
(801) 359-4326 fax

www.SpacesaverIM.com

Project Name:

UTAH BUREAU OF FORENSIC SERVICES

Project #: 21390	
Drawn by:	
Date Printed: 02/10/2014	
Scale 3/4" = 1'	Rev level:

APPROVAL
This drawing Approved By:

_____

Dated_____

COPYRIGHT © 2014 SPACESAVER CORPORATION. ALL RIGHTS RESERVED

Copyright © 2014 Spacesaver Corporation. This material is proprietary and confidential, and the disclosure reproduction by photography, film, blueprint or otherwise or incorporation into any information retrieval system without first receiving written approval from Spacesaver Corporation is expressly prohibited by law.

EXISTING FLOOR AND RAIL

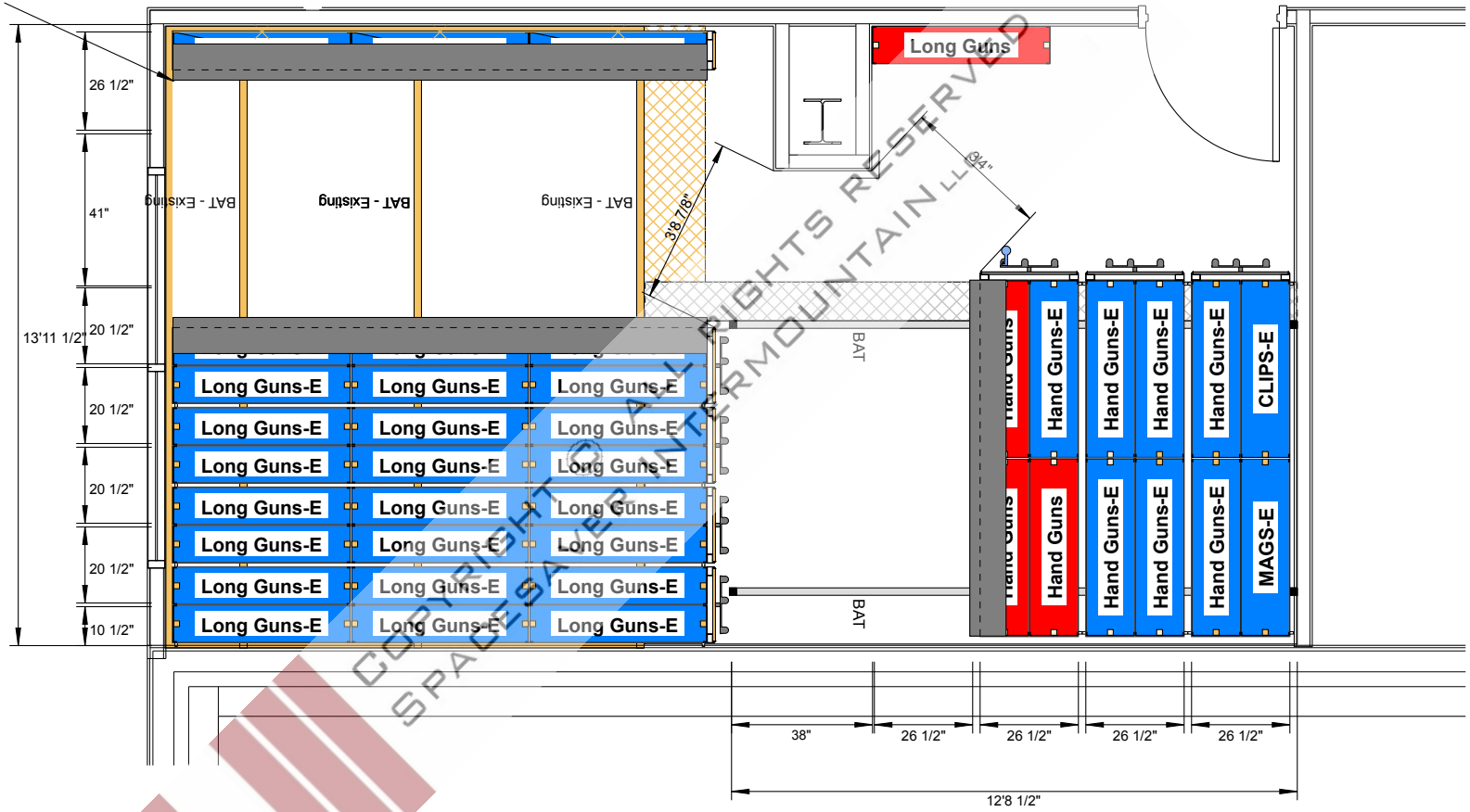

EXISTING SHELVING

NEW SHELVING

SYSTEM #1

SYSTEM #2

GUN VAULT PLAN VIEW

LONG GUN CAPACITY: 860
HANDGUN CAPACITY: 1,600

SPACESAVER INTERMOUNTAIN LLC

249 South 400 East
Salt Lake City, UT 84111

(801) 363-5882 main
(801) 359-4326 fax

www.SpacesaverIM.com

Project Name:

UTAH BUREAU OF FORENSIC SERVICES

Project #: 21390

Drawn by:

Date Printed: 02/10/2014

Scale 1/4" = 1'

Rev level:

APPROVAL
This drawing Approved By:

Dated

COPYRIGHT © 2014 SPACESAVER CORPORATION. ALL RIGHTS RESERVED

Copyright © 2014 Spacesaver Corporation. This material is proprietary and confidential, and the disclosure reproduction by photography, film, blueprint or otherwise or incorporation into any information retrieval system without first receiving written approval from Spacesaver Corporation is expressly prohibited by law.

H92 1/16"
85 1/4"x48" d10"

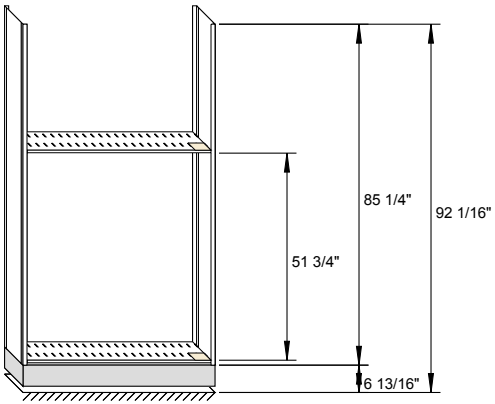

Long Guns

H92 1/16"
85 1/4"x48" d13"

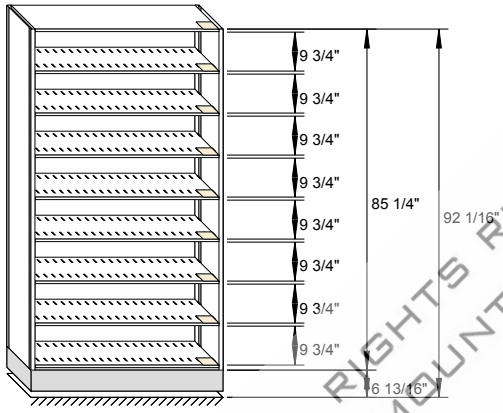

Hand Guns

H85 1/4"
85 1/4"x48" d10"

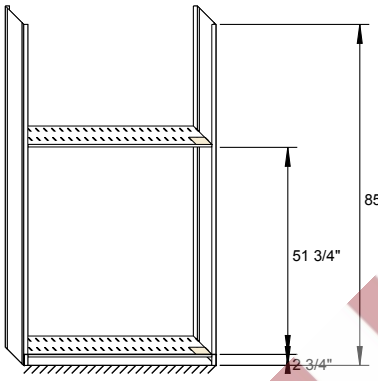

Long Guns

H92 1/16"
85 1/4"x48" d13"

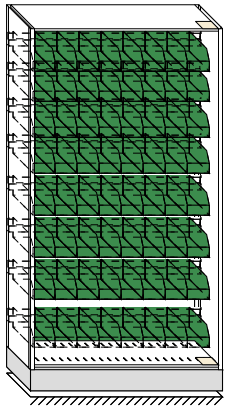

CLIPS

H92 1/16"
85 1/4"x48" d13"

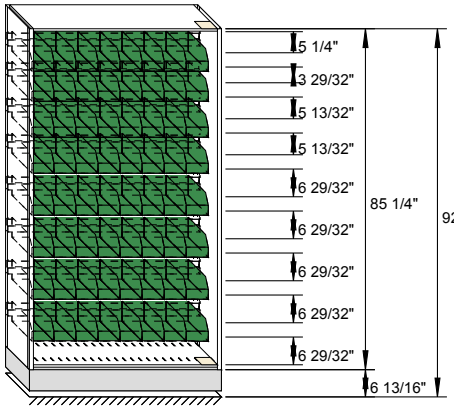

MAGS

COPYRIGHT © ALL RIGHTS RESERVED
SPACESAVER INTERMOUNTAIN LLC

EXISTING SYSTEM ELEVATION

SPACESAVER INTERMOUNTAIN LLC
249 South 400 East
Salt Lake City, UT 84111
(801) 363-5882 main
(801) 359-4326 fax
www.SpacesaverIM.com

Project Name:
UTAH BUREAU OF FORENSIC SERVICES

Project #: 21390
Drawn by:
Date Printed: 02/10/2014
Scale 1/4" = 1'
Rev level:

APPROVAL
This drawing Approved By: _____
Dated_____

COPYRIGHT © 2014 SPACESAVER CORPORATION. ALL RIGHTS RESERVED

Copyright © 2014 Spacesaver Corporation. This material is proprietary and confidential, and the disclosure reproduction by photography, film, blueprint or otherwise or incorporation into any information retrieval system without first receiving written approval from Spacesaver Corporation is expressly prohibited by law.

EVIDENCE VAULT CONCEPT IMAGE

SPACESAVER INTERMOUNTAIN LLC

249 South 400 East
Salt Lake City, UT 84111

(801) 363-5882 main
(801) 359-4326 fax

www.SpacesaverIM.com

Project Name:

UTAH BUREAU OF FORENSIC SERVICES

Project #: 21390	
Drawn by:	
Date Printed: 02/10/2014	
Scale 3/4" = 1'	Rev level:

APPROVAL
This drawing Approved By:

_____

Dated_____

COPYRIGHT © 2014 SPACESAVER CORPORATION. ALL RIGHTS RESERVED

Copyright © 2014 Spacesaver Corporation. This material is proprietary and confidential, and the disclosure reproduction by photography, film, blueprint or otherwise or incorporation into any information retrieval system without first receiving written approval from Spacesaver Corporation is expressly prohibited by law.

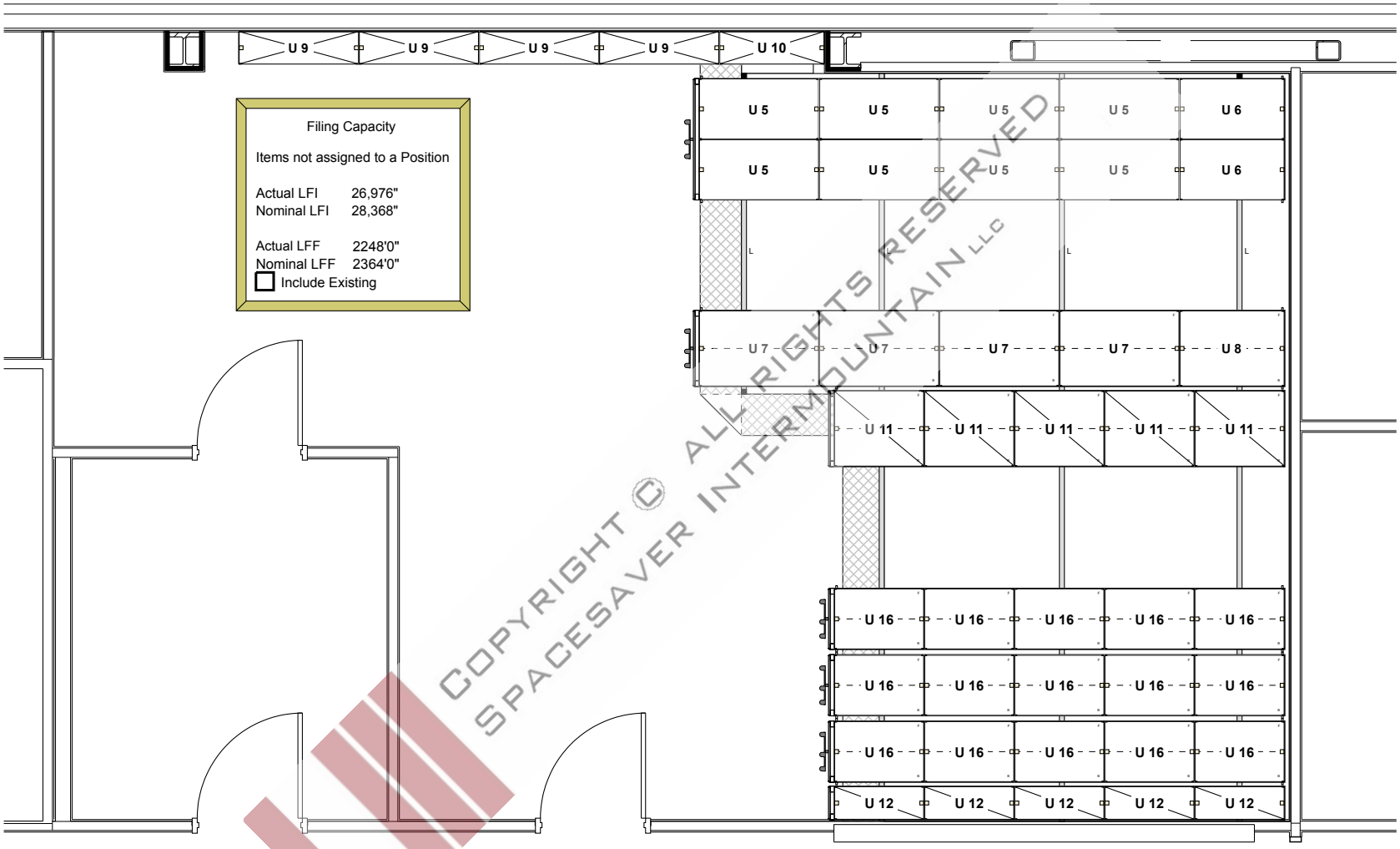

SYSTEM #1

EVIDENCE VAULT PLAN VIEW

SPACESAVER INTERMOUNTAIN LLC

249 South 400 East
Salt Lake City, UT 84111

(801) 363-5882 main
(801) 359-4326 fax

www.SpacesaverIM.com

Project Name:

UTAH BUREAU OF FORENSIC SERVICES

Project #: 21390

Drawn by:

Date Printed: 02/10/2014

Scale 3/16" = 1'

Rev level:

APPROVAL
This drawing Approved By:

_____

Dated_____

COPYRIGHT © 2014 SPACESAVER CORPORATION. ALL RIGHTS RESERVED

Copyright © 2014 Spacesaver Corporation. This material is proprietary and confidential, and the disclosure reproduction by photography, film, blueprint or otherwise or incorporation into any information retrieval system without first receiving written approval from Spacesaver Corporation is expressly prohibited by law.

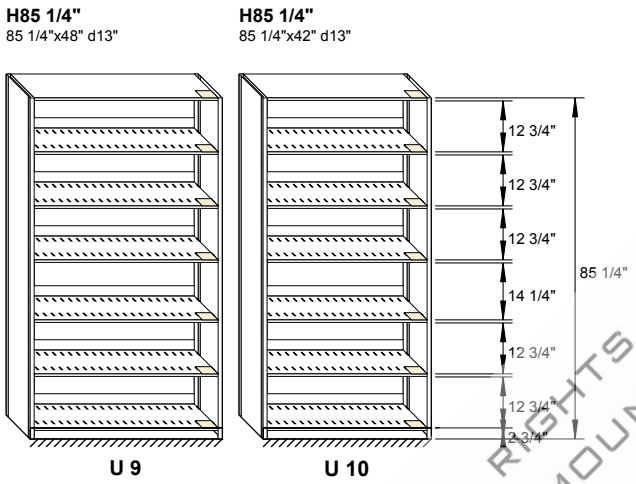

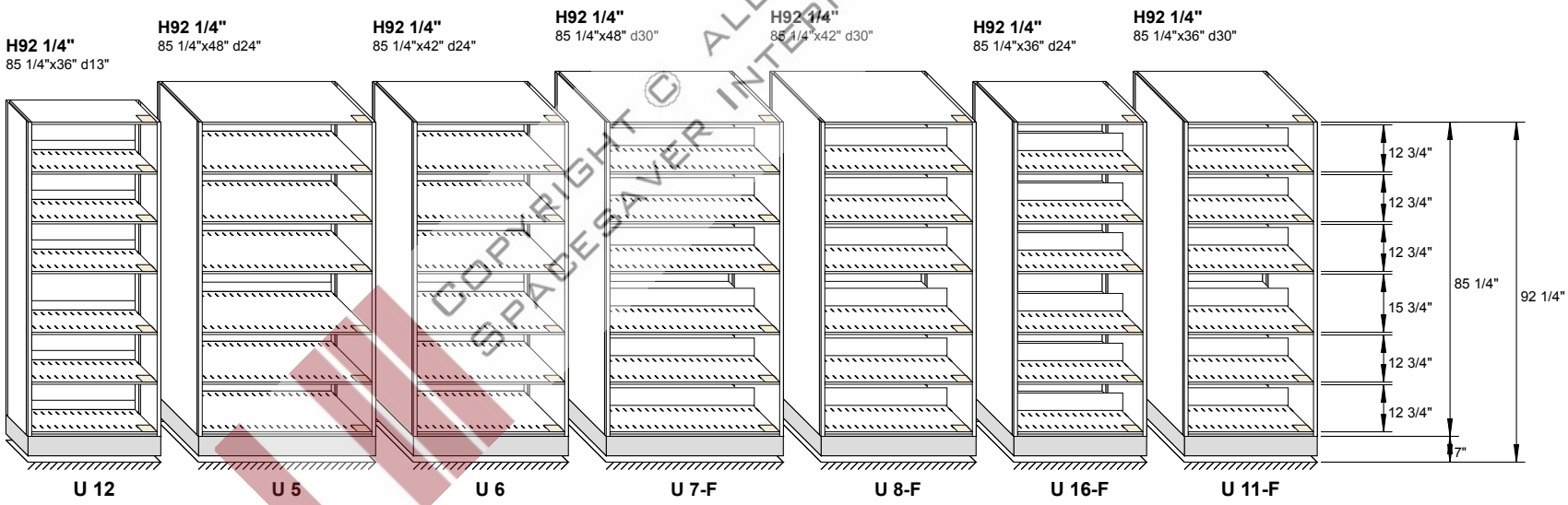

EVIDENCE VAULT ELEVATIONS

SPACESAVER INTERMOUNTAIN LLC

249 South 400 East
Salt Lake City, UT 84111

(801) 363-5882 main
(801) 359-4326 fax

www.SpacesaverIM.com

Project Name:

UTAH BUREAU OF FORENSIC SERVICES

Project #: 21390

Drawn by:

Date Printed: 02/10/2014

Scale 1/4" = 1'

Rev level:

APPROVAL
This drawing Approved By:

_____

Dated_____

COPYRIGHT © 2014 SPACESAVER CORPORATION. ALL RIGHTS RESERVED

COPYRIGHT © ALL RIGHTS RESERVED SPACESAVER INTERMOUNTAIN LLC

Copyright © 2014 Spacesaver Corporation. This material is proprietary and confidential, and the disclosure reproduction by photography, film, blueprint or otherwise or incorporation into any information retrieval system without first receiving written approval from Spacesaver Corporation is expressly prohibited by law.

System Weight Summary Report

Total media weight	6,483.24	lbs		
Total equipment weight	3,223.98	lbs		
Total picklist weight	0.00	lbs		
Total aisle weight (15 lbs/ft²)	1,035.91	lbs		
Total system (media, equipment and aisle) weight	10,743.13	lbs		
Total Foot-Print area	169.75	ft²		
Total weight load per square foot (avg unit load)	63.29	lbs/ft²		
Maximum Deflection Allowed is:	L/700			
Weight load (line load*) under front rail	3,024.29	lbs	232.75	lbs/ft
Weight load (line load*) under rail no. 2	3,082.30	lbs	237.22	lbs/ft
Weight load (line load*) under back rail	2,467.76	lbs	189.92	lbs/ft

*Line Load calculations do not include the weight of Floor, Ramp, or Aisles.

COPYRIGHT © ALL RIGHTS RESERVED
SPACESAVER INTERMOUNTAIN LLC

ASSUMPTIONS:
LONG GUNS: 2.61 lbs. per inch

GUN VAULT - SYSTEM #1

SPACESAVER INTERMOUNTAIN LLC
249 South 400 East
Salt Lake City, UT 84111
(801) 363-5882 main
(801) 359-4326 fax
www.SpacesaverIM.com

Project Name:
UTAH BUREAU OF FORENSIC SERVICES

Project #: 21390
Drawn by:
Date Printed: 02/10/2014
Scale 3/8" = 1'
Rev level:

APPROVAL
This drawing Approved By: _____
Dated_____

COPYRIGHT © 2014 SPACESAVER CORPORATION. ALL RIGHTS RESERVED

Copyright © 2014 Spacesaver Corporation. This material is proprietary and confidential, and the disclosure reproduction by photography, film, blueprint or otherwise or incorporation into any information retrieval system without first receiving written approval from Spacesaver Corporation is expressly prohibited by law.

System Weight Summary Report

Total media weight	5,136.60	lbs		
Total equipment weight	3,245.49	lbs		
Total picklist weight	0.00	lbs		
Total aisle weight (15 lbs/ft²)	686.36	lbs		
Total system (media, equipment and aisle) weight	9,068.45	lbs		
Total Foot-Print area	104.56	ft²		
Total weight load per square foot (avg unit load)	86.73	lbs/ft²		
Maximum Deflection Allowed is:	L/700			
Weight load (line load*) under front rail	4,127.79	lbs	323.61	lbs/ft
Weight load (line load*) under back rail	3,933.79	lbs	308.40	lbs/ft

*Line Load calculations do not include the weight of Floor, Ramp, or Aisles.

COPYRIGHT © ALL RIGHTS RESERVED
SPACESAVER INTERMOUNTAIN LLC

ASSUMPTIONS:
HAND GUNS: .87 lbs. per inch
CLIPS/MAGS: 2.25 lbs. per inch

GUN VAULT - SYSTEM #2

SPACESAVER INTERMOUNTAIN LLC
249 South 400 East
Salt Lake City, UT 84111
(801) 363-5882 main
(801) 359-4326 fax
www.SpacesaverIM.com

Project Name:
UTAH BUREAU OF FORENSIC SERVICES

Project #: 21390
Drawn by:
Date Printed: 02/10/2014
Scale 3/8" = 1'
Rev level:

APPROVAL
This drawing Approved By: _____
Dated_____

COPYRIGHT © 2014 SPACESAVER CORPORATION. ALL RIGHTS RESERVED

Copyright © 2014 Spacesaver Corporation. This material is proprietary and confidential, and the disclosure reproduction by photography, film, blueprint or otherwise or incorporation into any information retrieval system without first receiving written approval from Spacesaver Corporation is expressly prohibited by law.

System Weight Summary Report

Total media weight	32,751.00	lbs		
Total equipment weight	10,883.71	lbs		
Total picklist weight	0.00	lbs		
Total aisle weight (15 lbs/ft²)	1,925.82	lbs		
Total system (media, equipment and aisle) weight	45,560.53	lbs		
Total Foot-Print area	424.84	ft²		
Total weight load per square foot (avg unit load)	107.24	lbs/ft²		
Maximum Deflection Allowed is:	L/700			
Weight load (line load*) under front rail	3,428.71	lbs	321.35	lbs/ft
Weight load (line load*) under rail no. 2	12,618.82	lbs	507.35	lbs/ft
Weight load (line load*) under rail no. 3	15,200.79	lbs	610.90	lbs/ft
Weight load (line load*) under back rail	11,432.74	lbs	459.66	lbs/ft

*Line Load calculations do not include the weight of Floor, Ramp, or Aisles.

COPYRIGHT © ALL RIGHTS RESERVED
SPACESAVER INTERMOUNTAIN LLC

ASSUMPTIONS:
MISC.: 2.25 lbs. per inch

EVIDENCE VAULT - SYSTEM #1

SPACESAVER INTERMOUNTAIN LLC
249 South 400 East
Salt Lake City, UT 84111
(801) 363-5882 main
(801) 359-4326 fax
www.SpacesaverIM.com

Project Name:
UTAH BUREAU OF FORENSIC SERVICES

Project #: 21390
Drawn by:
Date Printed: 02/10/2014
Scale 3/8" = 1'
Rev level:

APPROVAL
This drawing Approved By: _____
Dated_____

COPYRIGHT © 2014 SPACESAVER CORPORATION. ALL RIGHTS RESERVED

Copyright © 2014 Spacesaver Corporation. This material is proprietary and confidential, and the disclosure reproduction by photography, film, blueprint or otherwise or incorporation into any information retrieval system without first receiving written approval from Spacesaver Corporation is expressly prohibited by law.

SECTION - 012300 - ALTERNATES

PART 1 - GENERAL

1.1 RELATED DOCUMENTS

A. Drawings and general provisions of the Contract, including General and Supplementary Conditions and other Division 01 Specification Sections, apply to this Section.

1.2 SUMMARY

A. Section includes administrative and procedural requirements for alternates.

1.3 DEFINITIONS

A. Alternate: An amount proposed by bidders and stated on the Bid Form for certain work defined in the bidding requirements that may be added to or deducted from the base bid amount if Owner decides to accept a corresponding change either in the amount of construction to be completed or in the products, materials, equipment, systems, or installation methods described in the Contract Documents.

1. Alternates described in this Section are part of the Work only if enumerated in the Agreement.

2. The cost or credit for each alternate is the net addition to or deduction from the Contract Sum to incorporate alternate into the Work. No other adjustments are made to the Contract Sum.

1.4 PROCEDURES

A. Coordination: Revise or adjust affected adjacent work as necessary to completely integrate work of the alternate into Project.

1. Include as part of each alternate, miscellaneous devices, accessory objects, and similar items incidental to or required for a complete installation whether or not indicated as part of alternate.

B. Notification: Immediately following award of the Contract, notify each party involved, in writing, of the status of each alternate. Indicate if alternates have been accepted, rejected, or deferred for later consideration. Include a complete description of negotiated revisions to alternates.

C. Execute accepted alternates under the same conditions as other work of the Contract.

D. Schedule: A schedule of alternates is included at the end of this Section. Specification Sections referenced in schedule contain requirements for materials necessary to achieve the work described under each alternate.

PART 2 - PRODUCTS (Not Used)

PART 3 - EXECUTION

3.1 SCHEDULE OF ALTERNATES

A. **Alternate No 1**. **Metal Storage Shelving in room 114 Warehouse**.

1. Base Bid: **Room constructed and turned over to owner without Metal Storage Shelving. Owner to provide and install Metal Storage shelving as part of owner supplied furnishings.**

2. Alternate: **Provide and install Metal Storage Shelving including delegated design of system as indicated in the contract documents.**

B. **Alternate No 2**. High Density Storage installation as per section 012100.

1. Base Bid: **Rooms constructed and turned over to owner without High Density Storage. Owner to provide and install High Density Storage as part of owner supplied furnishings.**

2. Alternate: **Provide and install High Density Storage based on allowance in Section 012100.**

END OF SECTION 012300

SECTION 055213 - PIPE AND TUBE RAILINGS

PART 1 - GENERAL

1.1 RELATED DOCUMENTS

A. Drawings and general provisions of the Contract, including General and Supplementary Conditions and Division 01 Specification Sections, apply to this Section.

1.2 SUMMARY

A. Section Includes:

1. Steel tube railings attached to metal stairs.
2. Steel tube handrails and guards attached to walls adjacent to metal stairs.
3. Steel tube handrails and guards attached to other adjacent materials.

B. Related Sections:

1. Section 055100 "Metal Stairs" for metal stairs.
2. Section 061053 "Miscellaneous Rough Carpentry" for wood blocking for anchoring railings.
3. Section 092216 "Non-Structural Metal Framing" for metal backing for anchoring railings.
4. Section 061053 “Miscellaneous Rough Carpentry” for wood blocking for anchoring railings.

1.3 PERFORMANCE REQUIREMENTS

A. Delegated Design: Design railings, including comprehensive engineering analysis by a qualified professional engineer, using performance requirements and design criteria indicated.

B. General: In engineering railings to withstand structural loads indicated, determine allowable design working stresses of railing materials based on the following:

1. Steel: 72 percent of minimum yield strength.

C. Structural Performance: Railings shall withstand the effects of gravity loads and the following loads and stresses within limits and under conditions indicated:

1. Handrails and Top Rails of Guards:

a. Uniform load of 50 lbf/ ft. (0.73 kN/m) applied in any direction.
b. Concentrated load of 200 lbf (0.89 kN) applied in any direction.
c. Uniform and concentrated loads need not be assumed to act concurrently.

2. Infill of Guards:

a. Concentrated load of 50 lbf (0.22 kN) applied horizontally on an area of 1 sq. ft. (0.093 sq. m). Spacing to leave <4” clear.
b. Infill load and other loads need not be assumed to act concurrently.

D. Thermal Movements: Allow for thermal movements from ambient and surface temperature changes acting on exterior metal fabrications by preventing buckling, opening of joints, overstressing of components, failure of connections, and other detrimental effects.

1. Temperature Change: 120 deg F (67 deg C), ambient; 180 deg F (100 deg C), material surfaces.

E. Control of Corrosion: Prevent galvanic action and other forms of corrosion by insulating metals and other materials from direct contact with incompatible materials.

1.4 ACTION SUBMITTALS

A. Product Data: For the following:

1. Manufacturer's product lines of mechanically connected railings.
2. Railing brackets.
3. Grout, anchoring cement, and paint products.

B. Shop Drawings: Include plans, elevations, sections, details, and attachments to other work.

C. Samples for Verification: For each type of exposed finish required.

1. Fittings and brackets.

D. Delegated-Design Submittal: For installed products indicated to comply with performance requirements and design criteria, including analysis data signed and sealed by the qualified professional engineer responsible for their preparation.

1.5 INFORMATIONAL SUBMITTALS

A. Qualification Data: For qualified professional engineer.

B. Welding certificates.

C. Paint Compatibility Certificates: From manufacturers of topcoats applied over shop primers certifying that shop primers are compatible with topcoats.

D. Product Test Reports: Based on evaluation of comprehensive tests performed by a qualified testing agency, according to ASTM E 894 and ASTM E 935.

1.6 QUALITY ASSURANCE

A. Source Limitations: Obtain each type of railing from single source from single manufacturer.

B. Welding Qualifications: Qualify procedures and personnel according to AWS D1.1/D1.1M, "Structural Welding Code - Steel."

C. Welding Qualifications: Qualify procedures and personnel according to the following:

1. AWS D1.1/D1.1M, "Structural Welding Code - Steel."

1.7 PROJECT CONDITIONS

A. Field Measurements: Verify actual locations of walls and other construction contiguous with metal fabrications by field measurements before fabrication.

1.8 COORDINATION AND SCHEDULING

A. Coordinate selection of shop primers with topcoats to be applied over them. Comply with paint and coating manufacturers' written recommendations to ensure that shop primers and topcoats are compatible with one another.

B. Coordinate installation of anchorages for railings. Furnish setting drawings, templates, and directions for installing anchorages, including sleeves, concrete inserts, anchor bolts, and items with integral anchors, that are to be embedded in concrete or masonry. Deliver such items to Project site in time for installation.

C. Schedule installation so wall attachments are made only to completed walls. Do not support railings temporarily by any means that do not satisfy structural performance requirements.

PART 2 - PRODUCTS

2.1 MANUFACTURERS

A. Manufacturers: Subject to compliance with requirements, available manufacturers offering products that may be incorporated into the Work include, but are not limited to, the following:

1. Steel Pipe and Tube Railings:

a. Pisor Industries, Inc.
b. Wagner, R & B, Inc.; a division of the Wagner Companies.
c. Other local fabricators meeting the specification requirements.

2.2 METALS, GENERAL

A. Metal Surfaces, General: Provide materials with smooth surfaces, without seam marks, roller marks, rolled trade names, stains, discolorations, or blemishes.

B. Brackets, Flanges, and Anchors: Cast or formed metal of same type of material and finish as supported rails unless otherwise indicated.

2.3 STEEL

A. Tubing: ASTM A 500 (cold formed). Size to match that specified in

1. Rails and Posts: 1-1/2-inch diameter top and bottom rails and 1/1/2 inch diameter posts.
2. Intermediate Rails Infill: 1-1/2-inch diameter intermediate rails spaced less than 4 (100-mm) inches clear.

3. Provide galvanized finish for exterior installations and where indicated.

B. Plates, Shapes, and Bars: ASTM A 36/A 36M.

2.4 FASTENERS

A. General: Provide the following:

1. Ungalvanized-Steel Railings: Plated steel fasteners complying with ASTM B 633 or ASTM F 1941 (ASTM F 1941M), Class Fe/Zn 5 for zinc coating.

B. Fasteners for Anchoring Railings to Other Construction: Select fasteners of type, grade, and class required to produce connections suitable for anchoring railings to other types of construction indicated and capable of withstanding design loads.

C. Fasteners for Interconnecting Railing Components:

1. Provide concealed fasteners for interconnecting railing components and for attaching them to other work, unless otherwise indicated.

D. Post-Installed Anchors: Torque-controlled expansion anchors or chemical anchors capable of sustaining, without failure, a load equal to six times the load imposed when installed in unit masonry and four times the load imposed when installed in concrete, as determined by testing according to ASTM E 488, conducted by a qualified independent testing agency.

1. Material for Interior Locations: Carbon-steel components zinc-plated to comply with ASTM B 633 or ASTM F 1941 (ASTM F 1941M), Class Fe/Zn 5, unless otherwise indicated.
2. Material for Exterior Locations and Where Stainless Steel is Indicated: Alloy Group 1 (A1) stainless-steel bolts, ASTM F 593 (ASTM F 738M), and nuts, ASTM F 594 (ASTM F 836M).

2.5 MISCELLANEOUS MATERIALS

A. Welding Rods and Bare Electrodes: Select according to AWS specifications for metal alloy welded.

B. Bituminous Paint: Cold-applied asphalt emulsion complying with ASTM D 1187.

C. Nonshrink, Nonmetallic Grout: Factory-packaged, nonstaining, noncorrosive, nongaseous grout complying with ASTM C 1107. Provide grout specifically recommended by manufacturer for interior and exterior applications.

D. Anchoring Cement: Factory-packaged, nonshrink, nonstaining, hydraulic-controlled expansion cement formulation for mixing with water at Project site to create pourable anchoring, patching, and grouting compound.

1. Water-Resistant Product: At exterior locations and where indicated provide formulation that is resistant to erosion from water exposure without needing protection by a sealer or waterproof coating and that is recommended by manufacturer for exterior use.

2.6 FABRICATION

A. General: Fabricate railings to comply with requirements indicated for design, dimensions, member sizes and spacing, details, finish, and anchorage, but not less than that required to support structural loads.

B. Assemble railings in the shop to greatest extent possible to minimize field splicing and assembly. Disassemble units only as necessary for shipping and handling limitations. Clearly mark units for reassembly and coordinated installation. Use connections that maintain structural value of joined pieces.

C. Cut, drill, and punch metals cleanly and accurately. Remove burrs and ease edges to a radius of approximately 1/32 inch (1 mm) unless otherwise indicated. Remove sharp or rough areas on exposed surfaces.

D. Form work true to line and level with accurate angles and surfaces.

E. Fabricate connections that will be exposed to weather in a manner to exclude water. Provide weep holes where water may accumulate.

F. Cut, reinforce, drill, and tap as indicated to receive finish hardware, screws, and similar items.

G. Connections: Fabricate railings with welded connections unless otherwise indicated.

H. Welded Connections: Cope components at connections to provide close fit, or use fittings designed for this purpose. Weld all around at connections, including at fittings.

1. Use materials and methods that minimize distortion and develop strength and corrosion resistance of base metals.
2. Obtain fusion without undercut or overlap.
3. Remove flux immediately.
4. At exposed connections, finish exposed surfaces smooth and blended so no roughness shows after finishing and welded surface matches contours of adjoining surfaces.

I. Nonwelded Connections: Connect members with concealed mechanical fasteners and fittings. Fabricate members and fittings to produce flush, smooth, rigid, hairline joints.

J. Form changes in direction as follows:

1. By bending or by inserting prefabricated elbow fittings.

K. Bend members in jigs to produce uniform curvature for each configuration required; maintain cross section of member throughout entire bend without buckling, twisting, cracking, or otherwise deforming exposed surfaces of components.

L. Close exposed ends of railing members with prefabricated end fittings.

M. Provide wall returns at ends of wall-mounted handrails unless otherwise indicated. Close ends of returns unless clearance between end of rail and wall is 1/4 inch (6 mm) or less.

N. Brackets, Flanges, Fittings, and Anchors: Provide wall brackets, flanges, miscellaneous fittings, and anchors to interconnect railing members to other work unless otherwise indicated.

1. At brackets and fittings fastened to plaster or gypsum board partitions, provide crush-resistant fillers, or other means to transfer loads through wall finishes to structural supports and prevent bracket or fitting rotation and crushing of substrate.

O. Provide inserts and other anchorage devices for connecting railings to concrete or masonry work. Fabricate anchorage devices capable of withstanding loads imposed by railings. Coordinate anchorage devices with supporting structure.

P. For railing posts set in concrete, provide stainless-steel sleeves not less than 6 inches (150 mm) long with inside dimensions not less than 1/2 inch (13 mm) greater than outside dimensions of post, with metal plate forming bottom closure.

2.7 FINISHES, GENERAL

A. Comply with NAAMM's "Metal Finishes Manual for Architectural and Metal Products" for recommendations for applying and designating finishes.

B. Protect mechanical finishes on exposed surfaces from damage by applying a strippable, temporary protective covering before shipping.

2.8 STEEL AND IRON FINISHES

A. Galvanized Railings:

1. Hot-dip galvanize exterior steel railings, including hardware, after fabrication.
2. Comply with ASTM A 123/A 123M for hot-dip galvanized railings.

3. Comply with ASTM A 153/A 153M for hot-dip galvanized hardware.
4. Do not quench or apply post galvanizing treatments that might interfere with paint adhesion.
5. Fill vent and drain holes that are exposed in the finished Work, unless indicated to remain as weep holes, by plugging with zinc solder and filing off smooth.

B. Preparing Galvanized Railings for Shop Priming: After galvanizing, thoroughly clean railings of grease, dirt, oil, flux, and other foreign matter, and treat with etching cleaner.

C. For nongalvanized steel railings, provide nongalvanized ferrous-metal fittings, brackets, fasteners, and sleeves, except galvanize anchors to be embedded in exterior concrete or masonry.

D. Preparation for Shop Priming: Prepare uncoated ferrous-metal surfaces to comply with requirements indicated below:

1. SSPC-SP 6/NACE No. 3, "Commercial Blast Cleaning."

2. Phosphatize.

E. Powder-Coat Finish: AAMA 2603 except with a minimum dry film thickness of 1.5 mils (0.04 mm). Comply with coating manufacturer's written instructions for cleaning, conversion coating, and applying and baking finish.

1. Color and Gloss: As selected by Architect from manufacturer's full range.

PART 3 - EXECUTION

3.1 EXAMINATION

A. Examine plaster and gypsum board assemblies, where reinforced to receive anchors, to verify that locations of concealed reinforcements have been clearly marked for Installer. Locate reinforcements and mark locations if not already done.

3.2 INSTALLATION, GENERAL

A. Fit exposed connections together to form tight, hairline joints.

B. Perform cutting, drilling, and fitting required for installing railings. Set railings accurately in location, alignment, and elevation; measured from established lines and levels and free of rack.

1. Do not weld, cut, or abrade surfaces of railing components that have been coated or finished after fabrication and that are intended for field connection by mechanical or other means without further cutting or fitting.
2. Set posts plumb within a tolerance of 1/16 inch in 3 feet (2 mm in 1 m).
3. Align rails so variations from level for horizontal members and variations from parallel with rake of steps and ramps for sloping members do not exceed 1/4 inch in 12 feet (5 mm in 3 m).

C. Corrosion Protection: Coat concealed surfaces of aluminum that will be in contact with grout, concrete, masonry, wood, or dissimilar metals, with a heavy coat of bituminous paint.

D. Adjust railings before anchoring to ensure matching alignment at abutting joints.

E. Fastening to In-Place Construction: Use anchorage devices and fasteners where necessary for securing railings and for properly transferring loads to in-place construction.

3.3 RAILING CONNECTIONS

A. Nonwelded Connections: Use mechanical or adhesive joints for permanently connecting railing components. Seal recessed holes of exposed locking screws using plastic cement filler colored to match finish of railings.

B. Welded Connections: Use fully welded joints for permanently connecting railing components. Comply with requirements for welded connections in "Fabrication" Article whether welding is performed in the shop or in the field.

C. Expansion Joints: Install expansion joints at locations indicated but not farther apart than required to accommodate thermal movement. Provide slip-joint internal sleeve extending 2 inches (50 mm) beyond joint on either side, fasten internal sleeve securely to one side, and locate joint within 6 inches (150 mm) of post.

3.4 ANCHORING POSTS

A. Form or core-drill holes not less than 6 inches (150 mm) deep and 3/4 inch (20 mm) larger than OD of post for installing posts in concrete. Clean holes of loose material, insert posts, and fill annular space between post and concrete with nonshrink, nonmetallic grout or anchoring cement, mixed and placed to comply with anchoring material manufacturer's written instructions.

B. Leave anchorage joint exposed with 1/8-inch (3-mm) buildup, sloped away from post.

C. Anchor posts to metal surfaces with oval flanges, angle type, or floor type as required by conditions, connected to posts and to metal supporting members as follows:

1. For steel pipe railings, weld flanges to post and bolt to metal supporting surfaces.
2. For stainless-steel pipe railings, weld flanges to post and bolt to supporting surfaces.

3.5 ATTACHING RAILINGS

A. Anchor railing ends at walls with round flanges anchored to wall construction and welded to railing ends.

B. Anchor railing ends to metal surfaces with flanges bolted to metal surfaces and welded to railing ends.

C. Attach railings to wall with wall brackets**,** except where end flanges are used. Provide brackets with 1-1/2-inch (38-mm) clearance from inside face of handrail and finished wall surface. Locate brackets as indicated or, if not indicated, at spacing required to support structural loads.

1. Use type of bracket with flange tapped for concealed anchorage to threaded hanger bolt.
2. Locate brackets as indicated or, if not indicated, at spacing required to support structural loads.

D. Secure wall brackets and railing end flanges to building construction as follows:

1. For concrete and solid masonry anchorage, use drilled-in expansion shields and hanger or lag bolts.
2. For hollow masonry anchorage, use toggle bolts.
3. For steel-framed partitions, use hanger or lag bolts set into wood backing between studs. Coordinate with stud installation to locate backing members.

3.6 ADJUSTING AND CLEANING

A. Touchup Painting: Immediately after erection, clean field welds, bolted connections, and abraded areas of shop paint, and paint exposed areas with the same material as used for shop painting to comply with SSPC-PA 1 for touching up shop-painted surfaces.

1. Apply by brush or spray to provide a minimum 2.0-mil (0.05-mm) dry film thickness.

3.7 PROTECTION

A. Protect finishes of railings from damage during construction period with temporary protective coverings approved by railing manufacturer. Remove protective coverings at time of Substantial Completion.

END OF SECTION 055213

SECTION 101100 - VISUAL DISPLAY UNITS

PART 1 - GENERAL

1.1 RELATED DOCUMENTS

A. Drawings and general provisions of the Contract, including General and Supplementary Conditions and Division 01 Specification Sections, apply to this Section.

1.2 SUMMARY

A. Section Includes:

1. Markerboards.

1.3 DEFINITIONS

A. Visual Display Board Assembly: Visual display surface that is factory fabricated into composite panel form, either with or without a perimeter frame; includes markerboards, and tackboards.

1.4 ACTION SUBMITTALS

A. Product Data: For each type of product indicated. Include construction details, material descriptions, dimensions of individual components and profiles, and finishes for visual display surfaces.

B. Energy and Environmental Submittals:

1. Product Data for adhesives, documentation including printed statement of VOC content.

C. Shop Drawings: For visual display surfaces. Include plans, elevations, sections, details, and attachments to other work.

1. Show locations of panel joints.
2. Include sections of typical trim members.

D. Samples for Initial Selection: For each type of visual display surface indicated, for units with factory-applied color finishes, and as follows:

1. Actual sections of porcelain-enamel face sheet.

E. Samples for Verification: For each type of visual display surface indicated.

1. Visual Display Surface: Not less than 8-1/2 by 11 inches (215 by 280 mm), mounted on substrate indicated for final Work. Include one panel for each type, color, and texture required.
2. Trim: 6-inch- (152-mm-) long sections of each trim profile.
3. Display Rail: 6-inch- (152-mm-) long sections.
4. Accessories: Full-size Sample of each type of accessory.

F. Product Schedule: For visual display surfaces**.**

1.5 INFORMATIONAL SUBMITTALS

A. Qualification Data: For qualified Installer.

B. Product Test Reports: Based on evaluation of comprehensive tests performed by a qualified testing agency, for surface-burning characteristics of fabrics.

C. Warranties: Sample of special warranties.

1.6 CLOSEOUT SUBMITTALS

A. Maintenance Data: For visual display surfaces to include in maintenance manuals.

1.7 QUALITY ASSURANCE

A. Installer Qualifications: Manufacturer's authorized representative who is trained and approved for installation of motor-operated, sliding visual display units required for this Project.

B. Source Limitations: Obtain visual display surfaces from single source from single manufacturer.

C. Surface-Burning Characteristics: As determined by testing identical products according to ASTM E 84 by a qualified testing agency. Identify products with appropriate markings of applicable testing agency.

1. Flame-Spread Index: 25 or less.
2. Smoke-Developed Index: 450 or less.

D. Preinstallation Conference: Conduct conference at Project site.

1.8 DELIVERY, STORAGE, AND HANDLING

A. Deliver factory-built visual display surfaces**,** including factory-applied trim where indicated**,** completely assembled in one piece without joints, where possible. If dimensions exceed maximum manufactured panel size, provide two or more pieces of equal length as acceptable to Architect. When overall dimensions require delivery in separate units, prefit components at the factory, disassemble for delivery, and make final joints at the site.

B. Store visual display surfaces vertically with packing materials between each unit.

1.9 PROJECT CONDITIONS

A. Environmental Limitations: Do not deliver or install visual display surfaces until spaces are enclosed and weathertight, wet work in spaces is complete and dry, work above ceilings is complete, and temporary HVAC system is operating and maintaining ambient temperature and humidity conditions at occupancy levels during the remainder of the construction period.

B. Field Measurements: Verify actual dimensions of construction contiguous with visual display surfaces by field measurements before fabrication.

1. Allow for trimming and fitting where taking field measurements before fabrication might delay the Work.

1.10 WARRANTY

A. Special Warranty for Porcelain-Enamel Face Sheets: Manufacturer's standard form in which manufacturer agrees to repair or replace porcelain-enamel face sheets that fail in materials or workmanship within specified warranty period.

1. Failures include, but are not limited to, the following:

a. Surfaces lose original writing and erasing qualities.
b. Surfaces exhibit crazing, cracking, or flaking.

2. Warranty Period: 50 years from date of Substantial Completion.

PART 2 - PRODUCTS

2.1 MATERIALS, GENERAL

A. Porcelain-Enamel Face Sheet: Manufacturer's standard steel sheet with porcelain-enamel coating fused to steel; uncoated thickness indicated.

1. Manufacturers: Subject to compliance with requirements, provide products by one of the following:

a. Claridge Products and Equipment, Inc.
b. PolyVision Corporation; a Steelcase company.
c. ADP Lemco

2. Gloss Finish: Gloss as indicated; dry-erase markers wipe clean with dry cloth or standard eraser.

B. Extruded Aluminum: ASTM B 221 (ASTM B 221M), Alloy 6063.

2.2 MARKERBOARD ASSEMBLIES

A. Porcelain-Enamel Markerboards: Balanced, high-pressure, factory-laminated markerboard assembly of three-ply construction consisting of backing sheet, core material, and 0.021-inch- (0.53-mm-) thick, porcelain-enamel face sheet with low-gloss finish.

1. Manufacturers: Subject to compliance with requirements, provide products by one of the following:

a. Claridge Products and Equipment, Inc.
b. PolyVision Corporation; a Steelcase company.
c. ADP Lemco

2. Manufacturer's Standard Core: Minimum 1/4 inch (6 mm) thick, with manufacturer's standard moisture-barrier backing.
3. Laminating Adhesive: Manufacturer's standard, moisture-resistant thermoplastic type.

2.3 MARKERBOARD AND ACCESSORIES

A. Aluminum Frames and Trim: Fabricated from not less than 0.062-inch- (1.57-mm-) thick, extruded aluminum; standard size and shape.

1. Factory-Applied Trim: Manufacturer's standard.

B. Chalktray: Manufacturer's standard, continuous.

1. Solid Type: Extruded aluminum with ribbed section and smoothly curved exposed ends.

2.4 FABRICATION

A. Porcelain-Enamel Visual Display Assemblies: Laminate porcelain-enamel face sheet and backing sheet to core material under heat and pressure with manufacturer's standard flexible, waterproof adhesive.

B. Visual Display Boards: Factory assemble visual display boards unless otherwise indicated.

1. Where factory-applied trim is indicated, trim shall be assembled and attached to visual display boards at manufacturer's factory before shipment.

C. Aluminum Frames and Trim: Fabricate units straight and of single lengths, keeping joints to a minimum. Miter corners to a neat, hairline closure.

1. Where factory-applied trim is indicated, trim shall be assembled and attached to visual display units at manufacturer's factory before shipment.

2.5 GENERAL FINISH REQUIREMENTS

A. Comply with NAAMM's "Metal Finishes Manual for Architectural and Metal Products" for recommendations for applying and designating finishes.

B. Protect mechanical finishes on exposed surfaces from damage by applying a strippable, temporary protective covering before shipping.

C. Appearance of Finished Work: Noticeable variations in same piece are not acceptable. Variations in appearance of adjoining components are acceptable if they are within the range of approved Samples and are assembled or installed to minimize contrast.

2.6 ALUMINUM FINISHES

A. Baked-Enamel or Powder-Coat Finish: AAMA 2603 except with a minimum dry film thickness of 1.5 mils (0.04 mm). Comply with coating manufacturer's written instructions for cleaning, conversion coating, and applying and baking finish.

2.7 VISUAL DISPLAY SURFACE SCHEDULE

A. Visual Display Board: Factory assembled.

1. Markerboard: Porcelain-enamel markerboard assembly.

a. Color: As selected by Architect from full range of industry colors.

2. Corners: Square.
3. Width: As indicated on Drawings.
4. Height: As indicated on Drawings.
5. Mounting: Wall.
6. Mounting Height: As indicated on Drawings.
7. Factory]-Applied Aluminum Trim: powder-coat finish.

a. Color: As selected by Architect from full range of industry colors and color densities.

8. Accessories:

a. Chalktray: Solid type.

PART 3 - EXECUTION

3.1 EXAMINATION

A. Examine substrates and conditions, with Installer present, for compliance with requirements for installation tolerances, surface conditions of wall, and other conditions affecting performance of the Work.

B. Examine walls and partitions for proper preparation and backing for visual display surfaces.

C. Examine walls and partitions for suitable framing depth where sliding visual display units will be installed.

D. Proceed with installation only after unsatisfactory conditions have been corrected.

3.2 PREPARATION

A. Comply with manufacturer's written instructions for surface preparation.

B. Clean substrates of substances that could impair the performance of and affect the smooth, finished surfaces of visual display boards, including dirt, mold, and mildew.

C. Prepare surfaces to achieve a smooth, dry, clean surface free of flaking, unsound coatings, cracks, defects, projections, depressions, and substances that will impair bond between visual display surfaces and wall surfaces.

3.3 INSTALLATION, GENERAL

A. General: Install visual display surfaces in locations and at mounting heights indicated on Drawings, or if not indicated, at heights indicated below. Keep perimeter lines straight, level, and plumb. Provide grounds, clips, backing materials, adhesives, brackets, anchors, trim, and accessories necessary for complete installation.

1. Mounting Height: As indicated on drawings or 36 inches (914 mm) above finished floor to top of chalktray if not indicated.

3.4 INSTALLATION OF FACTORY-FABRICATED VISUAL DISPLAY BOARDS AND ASSEMBLIES

A. Visual Display Boards: Attach concealed clips, hangers, and grounds to wall surfaces and to visual display boards with fasteners at not more than 16 inches (400 mm) o.c. Secure both top and bottom of boards to walls.

3.5 CLEANING AND PROTECTION

A. Clean visual display surfaces according to manufacturer's written instructions. Attach one cleaning label to visual display surface in each room.

B. Touch up factory-applied finishes to restore damaged or soiled areas.

C. Cover and protect visual display surfaces after installation and cleaning.

3.6 DEMONSTRATION

A. Engage a factory-authorized service representative to train Owner's maintenance personnel to adjust, operate, and maintain motor-operated, sliding visual display units.

END OF SECTION 101100

SECTION 102113 - TOILET COMPARTMENTS

PART 1 - GENERAL

1.1 RELATED DOCUMENTS

A. Drawings and general provisions of the Contract, including General and Supplementary Conditions and Division 01 Specification Sections, apply to this Section.

1.2 SUMMARY

A. Section Includes:

1. Stainless-steel toilet compartments configured as toilet enclosures and urinal screens.

B. Related Sections:

1. Section 061035 "Miscellaneous Rough Carpentry" for blocking.
2. Section 102800 "Toilet, Bath, and Laundry Accessories" for toilet tissue dispensers, grab bars, purse shelves, and similar accessories.

1.3 ACTION SUBMITTALS

A. Product Data: For each type of product indicated. Include construction details, material descriptions, dimensions of individual components and profiles, and finishes.

B. Shop Drawings: For toilet compartments. Include plans, elevations, sections, details, and attachments to other work.

1. Show locations of cutouts for compartment-mounted toilet accessories.
2. Show locations of reinforcements for compartment-mounted grab bars.
3. Show locations of centerlines of toilet fixtures.
4. Show ceiling grid and overhead support or bracing locations.

C. Samples for Verification: For the following products, in manufacturer's standard sizes unless otherwise indicated:

1. Each type of material, color, and finish required for units, prepared on 6-inch-square Samples of same thickness and material indicated for Work.
2. Each type of hardware and accessory.

1.4 QUALITY ASSURANCE

A. Comply with requirements in GSA's CID-A-A-60003, "Partitions, Toilets, Complete."

B. Surface-Burning Characteristics: As determined by testing identical products according to ASTM E 84, or another standard acceptable to authorities having jurisdiction, by a qualified testing agency. Identify products with appropriate markings of applicable testing agency.

1. Flame-Spread Index: 25 or less.
2. Smoke-Developed Index: 450 or less.

C. Regulatory Requirements: Comply with applicable provisions in ICC/ANSI A117.1 for toilet compartments designated as accessible.

1.5 PROJECT CONDITIONS

A. Field Measurements: Verify actual locations of toilet fixtures, walls, columns, ceilings, and other construction contiguous with toilet compartments by field measurements before fabrication.

PART 2 - PRODUCTS

2.1 MATERIALS

A. Aluminum Castings: ASTM B 26/B 26M.

B. Aluminum Extrusions: ASTM B 221 .

C. Brass Castings: ASTM B 584.

D. Brass Extrusions: ASTM B 455.

E. Steel Sheet: Commercial steel sheet for exposed applications; mill phosphatized and selected for smoothness.

1. Electrolytically Zinc Coated: ASTM A 879/A 879M, 01Z .
2. Hot-Dip Galvanized: ASTM A 653/A 653M, either hot-dip galvanized or galvannealed.

F. Stainless-Steel Sheet: ASTM A 666, Type 304, stretcher-leveled standard of flatness.

G. Stainless-Steel Castings: ASTM A 743/A 743M.

H. Zamac: ASTM B 86, commercial zinc-alloy die castings.

I. Plastic Laminate: NEMA LD 3, general-purpose HGS grade, 0.048-inch nominal thickness.

2.2 STAINLESS-STEEL UNITS

A. Manufacturers: Subject to compliance with requirements, available manufacturers offering products that may be incorporated into the Work include, but are not limited to, the following:

B. Basis-of-Design Product: Subject to compliance with requirements, provide product indicated on Drawings or comparable product by one of the following:

1. Bradley Corporation; Mills Partitions.
2. Flush Metal Partition, LLC.
3. Global Partitions; ASI Group.
4. Hadrian Manufacturing Inc.
5. Metpar Corp.

C. Toilet-Enclosure Style: Floor and ceiling anchored.

D. Urinal-Screen Style: Post to ceiling.

E. Door, Panel, and Pilaster Construction: Seamless, metal facing sheets pressure laminated to core material; with continuous, interlocking molding strip or lapped-and-formed edge closures; corners secured by welding or clips and exposed welds ground smooth. Provide with no-sightline system. Exposed surfaces shall be free of pitting, seam marks, roller marks, stains, discolorations, telegraphing of core material, or other imperfections.

1. Core Material: Manufacturer's standard sound-deadening honeycomb of resin-impregnated kraft paper in thickness required to provide finished thickness of 1 inch for doors and panels and 1-1/4 inches for pilasters.
2. Grab-Bar Reinforcement: Provide concealed internal reinforcement for grab bars mounted on units.
3. Tapping Reinforcement: Provide concealed reinforcement for tapping (threading) at locations where machine screws are used for attaching items to units.

F. Urinal-Screen Construction:

1. Flat-Panel Urinal Screen: Matching panel construction.

G. Facing Sheets and Closures: Stainless-steel sheet of nominal thicknesses as follows:

1. Pilasters, Braced at Both Ends: Manufacturer's standard thickness, but not less than 0.038 inch .
2. Panels: Manufacturer's standard thickness, but not less than 0.031 inch.
3. Doors: Manufacturer's standard thickness, but not less than 0.031 inch .
4. Flat-Panel Urinal Screens: Thickness matching the panels.

H. Pilaster Shoes and Sleeves (Caps): Stainless-steel sheet, not less than 0.031-inch nominal thickness and 3 inches high, finished to match hardware.

I. Urinal-Screen Post: Manufacturer's standard post design of material matching the thickness and construction of pilasters,,; with shoe and sleeve (cap) matching that on the pilaster.

J. Brackets (Fittings):

1. Stirrup Type: Ear or U-brackets; stainless steel.

K. Stainless-Steel Finish: No. 4 bright, directional polish on exposed faces. Protect exposed surfaces from damage by application of strippable, temporary protective covering before shipment.

2.3 ACCESSORIES

A. Hardware and Accessories: Manufacturer's standard design, heavy-duty operating hardware and accessories.

1. Material: Stainless steel.
2. Hinges: Manufacturer's standard paired, self-closing type that can be adjusted to hold doors open at any angle up to 90 degrees.
3. Latch and Keeper: Manufacturer's standard surface-mounted latch unit designed for emergency access and with combination rubber-faced door strike and keeper. Provide units that comply with regulatory requirements for accessibility at compartments designated as accessible.
4. Coat Hook: Manufacturer's standard combination hook and rubber-tipped bumper, sized to prevent in-swinging door from hitting compartment-mounted accessories.
5. Door Bumper: Manufacturer's standard rubber-tipped bumper at out-swinging doors.
6. Door Pull: Manufacturer's standard unit at out-swinging doors that complies with regulatory requirements for accessibility. Provide units on both sides of doors at compartments designated as accessible.

B. Overhead Bracing: Manufacturer's standard continuous, extruded-aluminum head rail with antigrip profile and in manufacturer's standard finish.

C. Anchorages and Fasteners: Manufacturer's standard exposed fasteners of stainless steel or chrome-plated steel or brass, finished to match the items they are securing, with theft-resistant-type heads.

Provide sex-type bolts for through-bolt applications. For concealed anchors, use stainless steel, hot-dip galvanized steel, or other rust-resistant, protective-coated steel.

2.4 FABRICATION

A. Floor-and-Ceiling-Anchored Units: Provide manufacturer's standard corrosion-resistant anchoring assemblies with leveling adjustment at tops and bottoms of pilasters. Provide shoes and sleeves (caps) at pilasters to conceal anchorage.

B. Urinal-Screen Posts: Provide manufacturer's standard corrosion-resistant anchoring assemblies with leveling adjustment at tops and bottoms of posts. Provide shoes and sleeves (caps) at posts to conceal anchorage.

C. Door Size and Swings: Unless otherwise indicated, provide 24-inch-wide, in-swinging doors for standard toilet compartments and 36-inch-wide, out-swinging doors with a minimum 32-inch-wide, clear opening for compartments designated as accessible.

PART 3 - EXECUTION

3.1 INSTALLATION

A. General: Comply with manufacturer's written installation instructions. Install units rigid, straight, level, and plumb. Secure units in position with manufacturer's recommended anchoring devices.

1. Maximum Clearances:

a. Pilasters and Panels: 1/2 inch .
b. Panels and Walls: 1 inch .

2. Stirrup Brackets: Secure panels to walls and to pilasters with no fewer than three brackets attached at midpoint and near top and bottom of panel.

a. Locate wall brackets so holes for wall anchors occur in masonry or tile joints.
b. Align brackets at pilasters with brackets at walls.

B. Floor-and-Ceiling-Anchored Units: Secure pilasters to supporting construction and level, plumb, and tighten. Hang doors and adjust so doors are level and aligned with panels when doors are in closed position.

C. Urinal Screens: Attach with anchoring devices to suit supporting structure. Set units level and plumb, rigid, and secured to resist lateral impact.

3.2 ADJUSTING

A. Hardware Adjustment: Adjust and lubricate hardware according to hardware manufacturer's written instructions for proper operation. Set hinges on in-swinging doors to hold doors open approximately 30 degrees from closed position when unlatched. Set hinges on out-swinging doors to return doors to fully closed position.

END OF SECTION 102113

SECTION 134900 - RADIATION PROTECTION

PART 1 GENERAL

1.1 SECTION INCLUDES

A. Lead-Laminated Gypsum Board.

B. Radiation Shielding Leaded Glass.

1.2 RELATED SECTIONS

A. Section 061053 – Miscellaneous rough Carpentry.

B. Section 092216 – Non Structural Metal Framing

C. Section 092900 - Gypsum Board.

D. Section 099123 – Interior Painting.

1.3 REFERENCES

A. ASTM A 366 - Standard Specification for Commercial Steel (CS) Sheet, Carbon (0.15 Maximum Percent) Cold-Rolled.

B. ASTM A 526 - Standard Specification for Steel Sheet, Zinc-Coated (Galvanized) by the Hot-Dip Process, Commercial Quality.

C. ASTM B 749 - Standard Specification for Lead and Lead Alloy Strip, Sheet, and Plate Products.

D. ASTM B 29 - Standard Specification for Refined Lead.

E. NCRP reports #33, #35 and #49.

1.4 DEFINITIONS

A. Lead Equivalence: Thickness of lead that provides same attenuation (reduction of radiation passing through) as material in question under specified conditions. Lead equivalence specified for materials used in diagnostic X-Ray rooms is measured at 150 kV unless indicated otherwise.

1.5 SYSTEM DESCRIPTION

A. Design Requirements:
1. Provide materials and workmanship, including joints and fasteners, that maintain continuity of radiation protection at all points and all directions equivalent to materials specified in thicknesses and locations indicated.
   a. Employ physicist knowledgeable in radiation protection for medical facilities to determine thicknesses and configurations of lead-lined materials.
2. Lead-Lined Assemblies: Provide lead thickness in doors, door frames, window frames, and other items located in lead-lined assemblies, not less than that indicated for assemblies in which they are installed unless indicated otherwise.
3. Lead Glazing: Provide lead equivalence not less than that indicated for assembly in which glazing is installed unless indicated otherwise.

1.6 SUBMITTALS

A. Submit under provisions of Section 01 30 00 - Administrative Requirements.

B. Product Data: Manufacturer's data sheets on each product to be used, including:
1. Preparation instructions and recommendations.

2. Storage and handling requirements and recommendations.
3. Installation methods.

C. Shop Drawings:
1. Indicate dimensions, description of materials and finishes and general construction.
2. Indicate layout of radiation-protected areas.
3. Indicate lead thickness or lead equivalencies of components.

1.7 QUALITY ASSURANCE

A. Qualifications: Firm with minimum of 5 years successful experience manufacturing radiation protection products similar to those specified for this Project.

B. Radiation Protection Survey: Employ registered X-Ray physicist, certified by American Board of Radiology, for testing specified radiation protective Work and to conduct radiation protection survey of facility after radiation shielding materials are installed.
1. Take radiation measurements and indicate evaluation of measurements in report. Submit report to Architect and Owner upon completion of report.
2. Take radiation measurements in locations indicated by Architect.

C. Radiation Protection Work: Comply with National Council of Radiation Protection (NCRP) Report No. 049 - Structural Shielding Design and Evaluation for Medical Use of X-Rays and Gamma Rays of Energies up to 10 MeV.
1. Comply with requirements of local regulatory agencies where local standards and criteria exceed requirements of NCRP Report No. 049.

D. Single Source Responsibility: Obtain radiation protection materials and accessories produced as standard products from single manufacturer regularly engaged in production of X-Ray shielding materials, equipment, and accessories.

E. Mock-Up: Provide a mock-up for evaluation of preparation techniques and application workmanship.
1. Finish areas designated by Architect.
2. Do not proceed with remaining work until workmanship, color, and sheen are approved by Architect.
3. Rework mock-up area as required to produce acceptable work.

1.8 DELIVERY, STORAGE, AND HANDLING

A. Comply with manufacturer's instruction for receiving, handling, storing, and protecting materials.

B. Deliver materials in manufacturer's original, unopened, undamaged containers with identification labels intact.

C. Store materials in original packaging, protected from exposure to harmful environmental conditions, including static electricity, and at temperature and humidity conditions recommended by manufacturer.

D. Exercise care to prevent edge damaged materials.

1.9 PROJECT CONDITIONS

A. Maintain environmental conditions (temperature, humidity, and ventilation) within limits recommended by manufacturer for optimum results. Do not install products under environmental conditions outside manufacturer's absolute limits.

PART 2 PRODUCTS

2.1 MANUFACTURERS

A. Basis of Desgin: MarShield - Div. of Mars Metal Co., which is located at: 4140 Morris Dr.; Burlington, ON, Canada L7L 5L6 ; Toll Free Tel: 800 381-5335; Tel: 905 637-3862 ; Fax: 905 637-8841 ; Email:request info (dholden@marsmetal.com); Web:www.marshield.com or equivalent product by one of the following manufacturers:

1. A&L Shielding
2. Mayco Industries
3. Radiation Protection Products
4. Santa Rosa Lead

2.2 MATERIALS

A. Lead Sheets: 99.9 percent pure unpierced virgin lead, free from dross, oxide inclusions, scale, laminations, blisters, and cracks.
1. Sheet Lead shall meet or exceed the Federal Specification QQL-201 F Grade C and ASTM B749-03 Standard Specification for Lead and Lead Alloy Strip, Sheet, and Plate Products, see NCRP reports #33, #35 and #49.
2. Thickness: As determined by Radiation Protection Survey, or not less than 1/16 inch (1.5 mm) if not indicated.
3. Variation in sheet thickness: Not to exceed 3 percent.

B. Lead Plate: 99.9 percent pure virgin lead, free from dross, oxide inclusions, scale, laminations, blisters, and cracks.
1. Lead plate shall meet or exceed the Federal Specification QQL-201 F Grade C and ASTM B749-03 Standard Specification for Lead and Lead Alloy Strip, Sheet, and Plate Products, see NCRP reports #33, #35 and #49.
2. Thickness: As indicated on drawings.
3. Variation in plate thickness: Not to exceed 3 percent.

2.3 MANUFACTURED UNITS

A. Lead-Laminated Drywall: Single unpierced layer of sheet lead meeting or exceeding the requirements of ASTM B 749 laminated to back of gypsum drywall meeting or exceeding the requirements of ASTM C36 with additives to enhance fire resistance of core. Drywall is surfaced with paper on front, back, and long edges.
1. Size: 48 inch (1219 mm) wide gypsum board sheets by height indicated.
2. Gypsum Type: 5/8 inch (16 mm) Type X.
3. Lead Thickness: 1/16 inch (1.5 mm).

B. Radiation Shielding X-Ray Safety Glass: Lead glass laminated to clear float glass to comply with applicable building codes for safety glass.
1. Total Thickness: 17/32 inch (13.5 mm).
2. Outer Lite: 5/16 inch thick leaded X-Ray glass (2.1mm lead equivalency).
3. Interlayer: 1/16 inch (1.5 mm) thick PVB.
4. Inner Lite: 5/32 inch (4 mm) thick clear float glass.

2.4 ACCESSORIES

A. Screw Fasteners: Type S Bugle Head, length as required.

B. Lead Strips: 2 inches (51 mm) wide, unless indicated otherwise, by same thickness as sheet lead laminated on gypsum board.

C. Lead Discs:3/8 inch (9.5 mm) diameter lead discs for use with screw heads.

D. Adhesive: Acceptable to manufacturer and capable of adhering lead sheets where required.

PART 3 EXECUTION

3.1 EXAMINATION

A. Verification of Conditions: Examine areas and conditions under which Work is to be performed and

identify conditions detrimental to proper or timely completion.

B. Verify that steel framing is not less than 20 gage (0.9 mm) with studs spaced not more than 16 inches (406 mm) on center, unless noted otherwise.

C. Do not proceed until unsatisfactory conditions have been corrected.

3.2 INSTALLATION OF LEAD-LAMINATED GYPSUM BOARD

A. Comply with manufacturer's recommendations.

B. Adhere lead strips on face of studs at joints in lead-laminated gypsum board, including inside and outside corners. Use 2 inches (50 mm) wide strips by same thickness as sheet lead laminated on gypsum board.

C. Shim studs and other framing members as necessary to provide flat, flush finished surfaces.

D. Install lead-laminated gypsum board on framing with screws spaced not more than 8 inches (203 mm) on center along edges of board and 12 inches (305 mm) on center in field of board.

E. Adhere lead discs to fastener heads. In each case, use method that provides continuous radiation shielding.

F. Where lead-laminated gypsum board is final substrate, apply joint treatment on fasteners and joints per Section 09 21 16.23 - Gypsum Board Shaft Wall Assemblies.

G. Where second layer of gypsum board occurs over lead-laminated gypsum board, comply with Section 09 21 16.23 - Gypsum Board Shaft Wall Assemblies for application of second layer.

3.3 INSTALLATION OF PENETRATING ITEMS

A. At penetrations of lead linings; provide lead shields to maintain continuity of protection.

B. Provide lead linings, sleeves, shields, and other protection in thickness not less than that required in assembly being penetrated.

C. Cut wall penetration covers from lead sheet of equal or greater thickness than backing on adjacent wall panels. Cut wall penetration covers to size required to cover wall penetrations with laps 1 inch (25 mm) minimum wide as indicated on penetration detail drawings.

D. Adhesive-apply lead sheet penetration covers on penetrating boxes and raceways and return penetration covers to backside of lead-backed wall panels with 1 inch (25 mm) minimum laps.
1. Do not use penetrating fasteners unless indicated otherwise.

E. Outlet Boxes and Conduit: Install between studs using steel telescoping mounting brackets. Cover or line with lead sheet lapped over adjacent lead lining at least 1 inch (25 mm). Wrap conduit with lead sheet for 10 inches (250 mm) in from box.

3.4 INSTALLATION OF WALL PENETRATION COVERS

A. Duct Penetrations With 8 PSF or Less Lead Sheet:
1. Wrap ducts with wall penetration covers, lapping lead joints 1 inch (25 mm) minimum.
2. Secure lead sheet in place with 1 inch (25 mm) minimum width steel bands spaced not more than 12 inches (305 mm) on center.
3. Do not cut into lead sheet with tightening steel bands.

B. Duct Penetrations with Greater than 8 psf Lead Sheet and Where Duct Shielding Exceeds 24 Inches (610 mm) in Width:
1. Laminate wall penetration covers to plywood or other similar structural panels conforming to shape of duct, lapping lead joints 1 inch (25 mm) minimum.

2. Secure lead laminated panels to ducts with mechanical fasteners located at duct seams and corners.
3. Where necessary to prevent lead laminated panels from overloading duct supports, independently suspend panels from hangers secured to overhead building structure.
4. Cover fastener heads with lead sheet matching thickness of adjacent lead.

C. Piping: Unless indicated otherwise, wrap piping with lead sheet for 10 inches (250 mm) from point of penetration.

3.5 ACCESSORY INSTALLATION

A. Comply with manufacturer's recommendations.

B. Wherever lead protection is penetrated, cut, or punctured, assure continuity of shielding by use of sheet lead, lead plugs or other approved method.

C. Install sheet lead lining within steel door frames to provide radiation protection to levels indicated or levels required to match adjacent wall protection.

D. Wrap electrical outlet boxes, view window frames, and other penetrations through lead barrier material with sheet lead to provide radiation protection to levels indicated or levels required to match adjacent wall protection.

3.6 FIELD QUALITY CONTROL

A. Field Inspection: Owner will engage qualified independent testing and inspecting agency to perform field tests and inspections and prepare test reports.

B. Correct deficiencies in, or remove and replace, radiation protection that inspection reports indicate does not comply with specified requirements.

C. Testing: After radiology equipment has been installed and placed in operating condition, Owner will engage radiation health physicist to test radiation protection.

D. Correct deficiencies in, or remove and replace, radiation protection that testing indicates does not comply with specified requirements, including finishes and other Work covering defective Work.

3.7 ADJUSTING

A. Check and readjust operating hardware items, leaving doors and frames undamaged and in proper operating condition.

3.8 CLEANING

A. Remove excess materials from site and leave Work areas broom clean.

B. Leave exposed surfaces ready for site finishing.

3.9 PROTECTION

A. Lock radiation-protected rooms once doors hardware is installed. Limit access to only those persons performing Work in radiation-protected rooms or as directed by Owner.

B. Tape temporary paper signs on radiation-resistant walls with the following text:
1. "Do not mount equipment on this wall without covering penetrating fasteners with lead sheet of thickness required by contract documents".

END OF SECTION 134900

VAN BOERUM
& FRANK ASSOCIATES, INC.
CONSULTING ENGINEERS

ADDENDUM #3

DATE: May 21, 2015

PROJECT NO: 13245

PROJECT: Unified State Laboratory Module 2

DIVISION – 22 & 23

GENERAL

1. The IPLV efficiency for CH-2 will be allowed to be 0.377 or better.
2. The sand/oil separator shown on sheet PW101B, keyed note #3 is intended to be part of the mechanical scope of work.
3. The dilution tank shown on sheet PW101C, keyed note #10 is intended to be part of the mechanical scope of work.
4. All lab faucets and gas outlets are specified by div 12 in section 123450. This includes wall mounted gas outlets.
5. Fume hoods will come with fixtures mounted and prepiped to the top of the hood by Div 12. It will be the responsibility of Div 22 to pipe the building services to the top of the hood and connect to the hood fixtures at these locations.
6. It will be the work of Div 12 to install all fixtures mounted in casework. It will be the responsibility of Div 22 to pipe the building services to these fixtures and connect at these locations.
7. It will be the work of Div 22 to install and pipe to all wall mounted fixtures provided by Div 12.

DRAWINGS

SHEET - MH101C

1. Add keyed note 11 to clarify to connect 2” exhaust piping to superglue fuming cabinet in VEB 2.

SHEET - MH102B

1. Add keyed note 12 to clarify to connect to drying chamber exhaust connection (Qty.2 cabinets) in ID/Impressions 212.

SHEET - MH103A

1. Revise snorkel exhaust connection locations to match updated laboratory plans in Grind 1 and Grind 2.
2. Add keyed note 8 to clarify snorkel exhaust connection in ICPMS 314A.
3. Revise supply and exhaust duct and airflow requirements in Pesticide Formulation Extraction Lab 301A.
4. Add keyed note 22 to specify flexible equipment exhaust connections (Qty. 2) in Pesticide Residue Extraction Lab 302.

SHEET - ME605

1. Revise performance of SV-A3-1 and HEV-A3-4 serving Pesticide Formulation Extraction Lab 301A.

SHEET - PE101B

1. Change the callout on the sink in Sally Port 121 to LS-2.

SHEET - PE103A

1. Add keyed note 14 indicating the location of the pure water outlet for connection to a polisher in Pesticide Residue Instrument Lab 301C
2. Changed the location of the pipe drop to match relocated umbilical in Pesticide Residue Extraction Lab 302.
3. Delete ESEW-1 on back side of pipe chase in Wet Chem. 314.
4. Add compressed air outlet, CA-1, in ICPMS 314A.
5. Add O2 piping, fixture call out and keyed note 13 in Wet Chem. 314.
6. Add LV piping to serve fume hoods in Wet Chem. 314.
7. Add eye wash, EW-1, in Meat Lab 313.
8. Add ESEW-1 in Meat Lab 313.
9. Add keyed notes 12, 15 and 16 to gas tanks in corridor closets.

SHEET - PE103B

1. Add eye wash, EW-1, at sinks in Path 313A and Food 312A.
2. Add eye wash, EW-1, at sink in Media Prep 312.
3. Delete sink in Media Prep 312.
4. Change sink callout to LS-1 in Dairy 311.
5. Add eyewash, EW-1 at two sinks in Dairy 311.

SHEET - PW101B

1. Add waste and vent piping and keyed note 6 to safety station in Autopsy 124.
2. Add waste and vent piping and keyed note 6 to safety station in Histology 124D.
3. Change sink callout in Sally Port 121 to LS-2.
4. Add waste and vent piping and keyed note 6 to safety station in Sally Port 121.

SHEET - PW101C

1. Add waste and vent piping and keyed note 11 to safety station in Loading 115.
2. Change keyed note 10 to correct dilution tank model number.

SHEET - PW102B

1. Delete floor drain at safety station in ID/Impressions 212.

SHEET - PW103A

1. Add waste and vent piping and keyed note 3 to serve cup sink in furnace 315D.
2. Delete safety station waste and vent piping in Wet Chem. 314 (see SHEET – PE103A #3 above)

SHEET - PW103B

1. Add waste and vent piping and keyed note 5 to safety station in Hall 300B.
2. Add waste and vent piping and keyed note 5 to safety station in Meat Lab 313. See sheet PW103B for continuation.

SHEET - PE602

1. Add room callout to Lab Gas Outlet Connection Schedule.
2. Add Air Compressor Schedule.

SPECIFICATIONS

SECTION – 226314

1 Delete paragraph 2.5 – Laboratory Gas Valves

SECTION – 220533 Heat Trace for Plumbing Piping:

1 Add this section in its entirety. See the attached spec section.

SECTION – 226610 Chemical Waste Dilution Tank:

1 Add this section in its entirety. See the attached spec section.

SECTION – 230533 Heat Trace for HVAC Piping:

1 Add this section in its entirety. See the attached spec section.

SECTION – 230900 Instrumentation and Controls for HVAC:
1 Paragraph 2.14-L: Add air flow monitoring to specification. See the attached revised spec.
2 Paragraph 2.13-B: Added Portable service tool to specification. See the attached revised spec.

SECTION – 230910 Critical Air Flow Control:
1 Paragraph 3.3-H & 3.8-J Added Differential pressure transducer across valve to specification. See the attached revised spec.

SECTION – 230940 Sequences of Operation:
1 Part 2.0: Added the following to the points list: See the attached revised spec.
   a. Exhaust Air AHU-3: Exhaust Air Flow.
   b. Exhaust Air AHU-4: Exhaust Air Flow.
   c. Automatic Transfer Switch & Em Generator: Emergency Generator Alarm, Status, and any available BACnet points.
   d. Venturi VAV Tracking Pair: Differential pressure drop across air valve.
   e. Fume Hood Labs: Differential pressure drop across air valve.
   f. Unit Heater: Hot Water Valve signal.
   g. Unit Heater: Fan Start/Stop.

SECTION – 232123 Hydronic Pumps:
1 Added Paragraph 2.4 Vertical Turbine Pump. See attached revised spec.

SECTION – 233113 Metal Ducts:
1 Add this section in its entirety. See the attached spec section.

SECTION – 237326 Fan Wall Type Custom Air Handling Units:
1 Modified several paragraphs and added sections changing to individual VFDs for Fan wall supply fans and primary with secondary VFDs for exhaust fans. See attached revised spec.
2 Added a section on the exhaust fan construction for exhaust air handling units. See attached revised spec.

SECTION – 238243 Radiant Panels:
1 Add this section in its entirety. See the attached spec section.

PRIOR APPROVALS

The following manufacturers, trade names and products are allowed to bid on a name brand only basis with the provision that they completely satisfy all and every requirement of the drawings, specifications and all addenda shall conform to the design, quality and standards specified, established and required for the complete and satisfactory installation and performance of the building and all its respective parts.

Item	Manufacturer	Comments
Faucets	American Standard	Not Approved
Showers	American Standard	Not Approved
Toilet Seats	American Standard	Approved
Hydronic Boiler	Lochinvar	Approved
Gas-fired Water Heater	Lochinvar	Approved
Air-Cooled Chiller	Dunham-Bush	Approved
Cooling Tower	Tower Tech	Not Approved
Air Separator	Flo Fab	Approved
Expansion Tank	Flo Fab	Approved
Hydronic-to-Hydronic Heat Exchanger	Flo Fab	Approved
Pump Suction Diffusers	Flo Fab	Approved
Triple Duty Valves	Flo Fab	Approved
Pressure Gauges	Flo Fab	Approved
Thermometers	Flo Fab	Approved
Airtrol Fittings	Flo Fab	Approved

Flex Connectors	Flo Fab	Approved
Y-Strainers	Flo Fab	Approved
Manual Air Vents	Flo Fab	Approved
Auto Air Vents	Flo Fab	Approved
Gauge Cocks	Flo Fab	Approved
Venturi	Flo Fab	Approved
Balancing Valves	Flo Fab	Approved
Rotary Screw Chiller	York YMC2 Magnetic Centrifugal Chiller	Approved
Custom Air Handling Unit	York/Pace Custom	Approved
Custom Air Handling Unit	Alliance Air Products Custom	Approved
Refrigerant Monitor	Genesis International	Approved
Scroll Water Chiller	York YCAL Air Cooled Scroll	Approved
Expansion loops and joints	Twin City Hose	Approved
Expansion loops and joints	Mason Industries	Approved
Strainers	IFC	Approved
Check Valves	IFC	Approved
Balancing Valves	Danfoss	Approved
Balancing Valves	Gerand Engineering	Approved
Instantaneous Heat Exchangers	Cemline	Approved
Instantaneous Heat Exchangers	Alfa Laval	Approved
Domestic wet rotor pumps	Grundfos	Approved
Pumps	PACO Pumps	Approved
Tangential Air Separators	American Wheatley	Approved
Plate & Frame Heat Exchangers	Alfa Laval	Approved
Cabinet Unit Heaters	Airtherm	Approved
Sump Pump	Weil Pump	Approved
Sump Pump	Grundfos	Approved
Radiant Ceiling Panel	Vulcan Radiator	Approved
Chilled Water Buffer Tank	Cemline	Approved
Vertical Turbine Pumps	Tru2o	Approved
Fan Coil Units	Stulz CeilAir	Approved
Backdraft Dampers	United Enertech	Approved
Pressure Relief Dampers	United Enertech	Approved
Barometric Relief Dampers	United Enertech	Approved
Manual Volume Dampers	United Enertech	Approved
Control Dampers	United Enertech	Approved
Fire Dampers	United Enertech	Approved
Smoke Dampers	United Enertech	Approved
Combination Fire/Smoke Dampers	United Enertech	Approved
Duct Silencers	Pottorff	Approved
Duct Mounted Access Doors	United Enertech	Approved
Remote Damper Operators	United Enertech	Approved
Flexible Ducts	JP Lamborn	Approved
Duct Security Bars	Tuttle & Bailey	Approved
Fixed, Extruded-Aluminum Louvers	United Enertech	Approved
Fiberglas Exhaust Fan	HEE Environmental Engineering	Approved
Snorkel Exhaust	Ventaire	Approved
Duct Coils	Commercial Coil	Approved
Expansion Fittings	Twin City Hose	Approved
Thermometers and Gages	Weksler	Approved
Vertical Turbine Pumps	American Turbine	Approved
Flexible Ducts	Thermaflex	Approved
Duct Security Bars	Krueger	Approved
Condensing Boilers	Thermal Solutions	Not Approved
Scroll Water Chillers	Aaon	Approved

Scroll Water Chillers	Quantech	Not Approved
Refrigerant Monitor	MSA	Approved
Cooling Towers	American Cooling Tower	Approved
Iron and Bronze Check Valve(Plumbing)	Keckley	Approved
Domestic Water Heat Exchangers	Bell & Gossett	Approved
Compression Tanks	Bell & Gossett	Approved
Condensing Boilers	Camus Advantus	Not Approved
Frequency Drives	Eaton Cutler Hammer	Not Approved
Holding Storage Tank	Niles	Approved
Centrifugal Chiller	Trane CVHS Oil Free Centrifugal Chiller	Not Approved
Rotary Screw Chiller	Trane Optimus	Approved
Custom Air Handling Units	Haakon	Approved
Laboratory Exhaust	Twin City	Approved
Gravity Ventilators	Air-Rite	Approved
Breechings, Chimney & Stacks	Metal-Fab	Approved
Dust Collectors	American Air Filter	Approved
Exhaust Hoods	Kees	Approved
Exhaust Hoods	Econ Aire	Approved
Snorkel Exhaust	Car-Mon	Approved
Duct Free A/C Unit	LG	Approved
Fan Wall Custom AHU	Unitech	Approved
Fan Coils	Magic Air	Approved
Fan Coils	IEC	Approved
Refrigerant Monitor	Sherlock	Approved
Control Dampers	Greenheck	Approved
Duct Silencers	Commercial Acoustics	Approved
Louvers	Greenheck	Approved
Listed Special Gas Vents	Van Packer	Approved
Listed Special Gas Vents	Protech Systems	Approved
Screw Chillers	Daikin Applied	Approved
Refrigerant Monitors	Sentech	Approved
Steam Humidifiers	Neptronic	Not Approved
Fan Coil Units	Williams	Approved
Propeller Unit Heaters	Beacon Morris	Approved
Propeller Unit Heaters	Sigma	Approved
Cabinet Unit Heaters	Beacon Morris	Approved
Cabinet Unit Heaters	Sigma	Approved
Cabinet Unit Heaters	Daikin Applied	Approved
Radiant Ceiling Panels	Sigma	Approved
Dust Collectors	AQC	Approved
Snorkel Exhaust Units	AQC	Approved
Split Systems	Daikin	Approved
Vertical Turbine Pumps	Taco	Approved
Suction Diffusers	Taco	Approved
Variable Frequency Drives	Danfoss	Approved
Plate and Frame Heat Exchangers	Sondex	Approved
Radiant Ceiling Panels	Sterling	Approved
Unit Heaters	Sterling	Approved
Cabinet Unit Heaters	Sterling	Approved
Storage Tank	Wendland	Approved
Strainers	Titan	Approved
Check Valves	Titan	Approved
Duct Silencers	Nailor	Approved
Duct Mounted Access Doors	Nailor	Approved

Duct Access Panel Assemblies	Nailor	Approved
Fixed Louvers	Nailor	Approved
Control Dampers	Nailor	Approved
HVAC Powered Ventilators	Acme	Not Approved
Centrifugal Roof Ventilators	Acme	Not Approved
Up Blast Prop Roof Exh Fans	Acme	Not Approved
Centrifugal Wall Ventilators	Acme	Not Approved
Inline Centrifugal Fans	Acme	Not Approved
Laboratory Exhaust Fans	Acme	Not Approved
Fixed Louvers	American Warming	Approved
Flexible Duct	Thermaflex	Approved
Air Separator	Patterson Pump Co.	Approved
Expansion Tanks	Patterson Pump Co.	Approved
Pump Suction Diffusers	Patterson Pump Co.	Approved
Plate & Frame HX	GEA	Approved
Condensing Boilers	Fulton Vantage	Not Approved
Unit Heater	Sigma Corp.	Approved
Wye Strainers	Nexus	Approved
Balance Valves	Nexus	Approved

End Addendum

SECTION 220533 - HEAT TRACING FOR PLUMBING PIPING

PART 1 - GENERAL

1.1 RELATED DOCUMENTS

A. Drawings and general provisions of the Contract, including General and Supplementary Conditions and Division 01 Specification Sections, apply to this Section.

1.2 SUMMARY

A. This Section includes plumbing piping heat tracing for freeze prevention, domestic hot-water-temperature maintenance, and snow and ice melting on roofs and in gutters and downspouts with the following electric heating cables:

1. Self-regulating, parallel resistance.

1.3 SUBMITTALS

A. Product Data: Include rated capacities, operating characteristics, furnished specialties, and accessories for each type of product indicated.

1. Schedule heating capacity, length of cable, spacing, and electrical power requirement for each electric heating cable required.

B. Shop Drawings: For electric heating cable. Include plans, sections, details, and attachments to other work.

1. Wiring Diagrams: Power, signal, and control wiring.

C. Field quality-control test reports.

D. Operation and Maintenance Data: For electric heating cables to include in operation and maintenance manuals.

E. Warranty: Special warranty specified in this Section.

1.4 QUALITY ASSURANCE

A. Electrical Components, Devices, and Accessories: Listed and labeled as defined in NFPA 70, Article 100, by a testing agency acceptable to authorities having jurisdiction, and marked for intended use.

1.5 WARRANTY

A. When warranties are required, verify with Owner's counsel that special warranties stated in this Article are not less than remedies available to Owner under prevailing local laws. Coordinate with Division 01 Section "Product Requirements."

B. Special Warranty: Manufacturer's standard form in which manufacturer agrees to repair or replace electric heating cable that fails in materials or workmanship within specified warranty period.

1. Warranty Period: 10 years from date of Substantial Completion.

PART 2 - PRODUCTS

2.1 SELF-REGULATING, PARALLEL-RESISTANCE HEATING CABLES

A. Available Manufacturers: Subject to compliance with requirements, manufacturers offering products that may be incorporated into the Work include, but are not limited to, the following:

1. Chromalox, Inc.; Wiegard Industrial Division; Emerson Electric Company.
2. Delta-Therm Corporation.
3. Easy Heat Inc.
4. Raychem; a division of Tyco Thermal Controls.
5. Thermon Manufacturing Co.

B. Heating Element: Pair of parallel No. 16 AWG, nickel-coated stranded copper bus wires embedded in crosslinked conductive polymer core, which varies heat output in response to temperature along its length. Terminate with waterproof, factory-assembled nonheating leads with connectors at one end, and seal the opposite end watertight. Cable shall be capable of crossing over itself once without overheating.

C. Electrical Insulating Jacket: Flame-retardant polyolefin.

D. Cable Cover: Stainless-steel braid, and polyolefin outer jacket with UV inhibitor.

E. Maximum Operating Temperature (Power On): 150 deg F.

F. Maximum Exposure Temperature (Power Off): 185 deg F.

G. Maximum Operating Temperature: 300 deg F.

2.2 CONTROLS

A. Remote bulb unit with adjustable temperature range from 30 to 50 deg F.

B. Snap action; open-on-rise, single-pole switch with minimum current rating adequate for connected cable.

C. Remote bulb on capillary, resistance temperature device, or thermistor for directly sensing pipe-wall temperature.

D. Corrosion-resistant, waterproof control enclosure.

2.3 ACCESSORIES

A. Cable Installation Accessories: Fiberglass tape, heat-conductive putty, cable ties, silicone end seals and splice kits, and installation clips all furnished by manufacturer, or as recommended in writing by manufacturer.

B. Warning Labels: Refer to Division 22 Section "Identification for Plumbing Piping and Equipment."

C. Warning Tape: Continuously printed "Electrical Tracing"; vinyl, at least 3 mils thick, and with pressure-sensitive, permanent, waterproof, self-adhesive back.

1. Width for Markers on Pipes with OD, Including Insulation, Less Than 6 Inches: 3/4 inch minimum.
2. Width for Markers on Pipes with OD, Including Insulation, 6 Inches or Larger: 1-1/2 inches minimum.

PART 3 - EXECUTION

3.1 EXAMINATION

A. Examine surfaces and substrates to receive electric heating cables for compliance with requirements for installation tolerances and other conditions affecting performance.

1. Ensure surfaces and pipes in contact with electric heating cables are free of burrs and sharp protrusions.
2. Proceed with installation only after unsatisfactory conditions have been corrected.

3.2 INSTALLATION

A. Install electric heating cable across expansion, construction, and control joints according to manufacturer's written recommendations using cable protection conduit and slack cable to allow movement without damage to cable.

B. Electric Heating Cable Installation for Snow and Ice Melting in Gutters and Downspouts: Install in gutters and downspouts with clips furnished by manufacturer that are compatible with gutters, and downspouts.

C. Electric Heating Cable Installation for Freeze Protection for Piping:

1. Install electric heating cables after piping has been tested and before insulation is installed.
2. Install electric heating cables according to IEEE 515.1.
3. Install insulation over piping with electric cables according to Division 22 Section "Plumbing Insulation."
4. Install warning tape on piping insulation where piping is equipped with electric heating cables.

D. Set field-adjustable switches and circuit-breaker trip ranges.

E. Protect installed heating cables, including nonheating leads, from damage.

3.3 CONNECTIONS

A. Ground equipment according to Division 26 Section "Grounding and Bonding for Electrical Systems."

B. Connect wiring according to Division 26 Section "Low-Voltage Electrical Power Conductors and Cables."

3.4 FIELD QUALITY CONTROL

A. Testing: Perform tests after cable installation but before application of coverings such as insulation, wall or ceiling construction, or concrete.

1. Test cables for electrical continuity and insulation integrity before energizing.
2. Test cables to verify rating and power input. Energize and measure voltage and current simultaneously.

B. Repeat tests for continuity, insulation resistance, and input power after applying thermal insulation on pipe-mounting cables.

C. Remove and replace malfunctioning units and retest as specified above.

END OF SECTION 220533

SECTION 226610 - CHEMICAL-WASTE DILUTION TANK

1. GENERAL

1.1. Quality Assurance

1.1.1. Acceptable Manufacturers:

Containment Solutions, Inc., Conroe, Texas

1.1.2. Governing Standards, as applicable:

1.1.2.1. Underwriters Laboratories Inc. Standard 1316, Glass-Fiber Reinforced Plastic Underground Storage Tanks for Petroleum Products, Alcohols, and Alcohol-Gasoline Mixtures.

1.1.2.2. Underwriters Laboratories of Canada standard ULC-S615, Reinforced Plastic Underground Tanks for Flammable & Combustible Liquids.

1.1.2.3. National Fire Protection Association codes and standards:

- NFPA 30 Flammable and Combustible Liquids Code
- NFPA 30A Motor Fuel Dispensing Facilities and Repair Garages Code
- NFPA 31 Installation of Oil-Burning Equipment Standard

1.1.2.4. City of New York Department of Buildings M.E.A., 71-85-M

1.1.2.5. American Concrete Institute standard ACI 318, Building Code Requirements for Structural Concrete.

1.2. Submittals

1.2.1. Contractor shall submit shop drawings, manufacturer's product brochures, installation instructions and calibration charts.

2. PRODUCTS

2.1. Double-Wall and Triple-Wall

Fiberglass Underground Storage Tanks

2.1.1. Loading Conditions - Tanks shall meet the following design criteria:

2.1.1.1. External hydrostatic pressure: Buried in ground with 7' of over burden over the top of the tank, the excavation fully flooded and a safety factor of 5:1 against general buckling.

2.1.1.2. Surface Loads: When installed according to manufacturer's current installation instructions, tanks shall withstand surface HS-20 axle loads (32,000 lbs/axle).

2.1.1.3. Internal Load: Primary and secondary tanks shall withstand 5 psig (35kPa), or 3 psig for 12' diameter tanks, air pressure test with 5:1 safety factor.

2.1.1.4. Tanks shall be designed to support accessory equipment such as heating coils, ladders, drop

tubes, etc. when installed according to manufacturer's recommendations and limitations.

2.1.2. Product-Storage Requirements

2.1.2.1. All primary tanks must be vented. Tanks are designed for operation at atmospheric pressure only, except for use with vapor recovery systems at a pressure or vacuum not to exceed 1 psig (7 kPa).

2.1.2.2. Tanks shall be capable of storing liquids with specific gravity up to 1.1.

2.1.3. Materials

2.1.3.1. The tank shall be manufactured as a matrix of premium resin, glass fibers and silane-treated silica that together result in a composite providing improved corrosion protection.

2.1.3.2. Tank inner wall shall be fabricated against a mold to produce a non-air inhibited and high gloss laminate to provide a fully cured inner surface without the need for wax coats, a low coefficient of friction and a natural resistance to the build-up of algae or other contamination on the surface. Wax and wax resin coatings cannot be used to achieve full surface cure on tank shells and endcaps.

2.1.3.3. Tank inner wall shall have a vinyl ester coating.

2.1.4. Dimensional Requirements (refer to Containment Solutions literature)

2.1.4.1. Nominal capacity of the tank shall be 3000 gallons.

2.1.4.2. Nominal outside diameter of the tank shall be 6 feet.

2.1.5. Monitoring Capabilities

2.1.5.1. Double and triple-wall tanks shall have a monitoring space between the walls to allow for the free flow and containment of leaked product from the primary tank. The monitoring space shall provide equal communication in all directions.

2.1.5.2. The following continuous monitoring conditions shall be compatible with the cavity between the inner and outer tanks:

- Vented to atmosphere
- Vacuum – 5 psig maximum
- Positive air pressure (3 psig maximum)
- External hydrostatic pressure – 7' maximum groundwater head pressure over tank top

2.1.5.3. Tanks 6' diameter and larger shall have an integrally mounted annular space reservoir installed on the tank for factory-installed brine and continuous hydrostatic monitoring. The reservoir shall be constructed of fiberglass reinforced plastic materials and be included in the tank warranty.

2.1.5.4. The monitoring fitting for the monitoring space shall be a 4" NPT fitting.

2.1.5.5. The monitoring system shall be capable of detecting a breach in the inner and outer tank under the following installed conditions:

- When the primary tank is empty.
- When the primary tank is partially or completely full and the ground water table is below tank bottom.

- When the primary tank is partially or completely full and the tank is partially or completely submerged in groundwater.

2.1.5.6. The leak detection performance of the monitoring system shall be listed as a continuous interstitial monitoring method (liquid filled) by the National Work Group on Leak Detection Evaluations (NWGLDE). The system should be capable of detecting leaks in the primary or secondary tank walls as small as 0.10 gallons per hour within one-month.

2.1.5.7. The hydrostatic monitoring system shall be capable of a precision tank test that is listed by the National Work Group on Leak Detection Evaluations (NWGLDE).

2.1.5.8. If hydrostatically monitored, any solution used in the monitoring space shall be compatible with the tank and be of a contrasting color to the tank.

2.2. Accessories

2.2.1. Flanged Manways

2.2.1.1. The standard manway is 22” I.D. and will be furnished with UL listed gaskets and covers (30” and 36” manways are optional).

2.2.1.2. Location – see standard tank drawings.

2.2.1.3. Optional manway extensions shall be fiberglass and sufficient length to bring the manway lid to grade.

2.2.2. Fill Tubes - Fill tubes of appropriate design shall be supplied by contractor.

2.2.3. Hydrostatic Monitor Accessories

2.2.3.1. Brine monitoring fluid shall be a calcium chloride solution.

2.2.3.2. Double float reservoir sensor supplied by contractor shall be designed for CSI reservoirs. The components of the sensor shall be compatible with brine and provide two alarm points positioned 10” apart.

2.2.4. Secondary Containment Collar

2.2.4.1. UL label shall be affixed to collar.

2.2.4.2. The collar shall be fiberglass reinforced plastic, 42” or 48” in diameter and shall be factory-installed in accordance with drawings.

2.2.4.3. The collar shall include an internal adhesive channel.

2.2.4.4. The collar shall be included in the 30-year tank warranty.

2.2.5. Adhesive Kit (Kit AD)

2.2.5.1. UL Listed and alcohol compatible adhesive kit shall provide a watertight seal at the tank sump and containment collar joint to prevent the ingress of water or egress of fuel. The adhesive kit includes resin, catalyst, mixing stick, putty knife, sandpaper, grout bag, and installation instructions.

2.2.6. Tank Sumps

2.2.6.1. UL label shall be affixed to tank sump components.

2.2.6.2. Tank sumps & collars shall be listed by Underwriters Laboratories for petroleum fuels and all blends of alcohol (same as tank). Collar and sump shall be tested and listed as a complete sump system.

2.2.6.3. Tank sump components shall be constructed of fiberglass reinforced plastic. The tank sump shall be 42” or 48” in diameter and must mount to the secondary containment collar. Standard tank sump shall consist of an octagon shaped base (round base is optional), round body extension and enclosure top.

2.2.6.4. The octagon base shall be 24” in height and provide 19” high panels for piping entry points. The base must be capable of joining to the collar with an internal adhesive channel.

2.2.6.5. A 34” O.D. watertight lid shall be provided at the submersible and fill/vapor end of the tank and provide a watertight seal to the sump enclosure with12” of water above the lid and remain leak free.

2.2.6.6. Refer to tank sump drawings for standard models and configurations.

2.2.7. Ladders

2.2.7.1. Ladders shall be supplied by the tank manufacturer (carbon steel, stainless steel, aluminum).

2.2.8. Anchor Straps

2.2.8.1. Straps shall be supplied by the tank manufacturer.

2.2.8.2. Number and location of straps shall be as specified by manufacturer.

2.2.8.3. Each strap shall be capable of withstanding a maximum load of 25,000 lbs.

2.2.9. Prefabricated Concrete Deadmen Anchors

2.2.9.1. Design Conditions – Deadmen shall meet the following design criteria:

- Deadman shall be designed to ACI 318
- Manufactured with 4,000 psig concrete
- Manufactured in various lengths
- Provide adjustable anchor points for hold down straps

2.2.10. Liquid Sensor Drawstring

2.2.10.1. Galvanized steel drawstring shall be factory installed at the monitoring fitting to facilitate field insertion of sensor.

2.2.11. Fittings Threaded NPT

2.2.11.1. All threaded fittings shall be located on a manway cover or within 12” of the tank top center line. Fittings to be supplied with temporary thread protectors or threaded plugs.

2.2.11.2. All standard fittings shall be 4” diameter NPT half couplings.

2.2.11.3. Internal piping shall be terminated at least 4” from the tank bottom (6” for 12’ diameter tanks).

3. EXECUTION

3.1. Installation and Testing

3.1.1. Fiberglass underground tanks must be tested and installed according to the current installation instructions provided with the tank (refer to Containment Solutions Pub. No. INST 6001). Tanks are

installed with pea gravel or crushed stone as specified in current installation instructions. Containment Solutions' tanks are intended for storing products listed in the warranty; any other products not listed in the warranty must be approved in advance by Containment Solutions.

4. LIMITED WARRANTY

4.1. Limited Warranty

4.1.1. Warranty shall be Containment Solutions limited warranty in effect at time of delivery.

SECTION 230533 - HEAT TRACING FOR HVAC PIPING

PART 1 - GENERAL

1.1 RELATED DOCUMENTS

A. Drawings and general provisions of the Contract, including General and Supplementary Conditions and Division 01 Specification Sections, apply to this Section.

1.2 SUMMARY

A. This Section includes heat tracing with the following electric heating cables:

1. Self-regulating, parallel resistance. Provide heat tracing for the cooling tower and fuel oil piping.

B. Related Sections include the following:

1. Division 22 Section "Heat Tracing for Plumbing Piping," which shall include roof drain piping and rain gutters.

1.3 SUBMITTALS

A. Product Data: Include rated capacities, operating characteristics, furnished specialties, and accessories for each type of product indicated.

1. Schedule heating capacity, length of cable, spacing, and electrical power requirement for each electric heating cable required.

B. Shop Drawings: For electric heating cable. Include plans, sections, details, and attachments to other work.

1. Wiring Diagrams: Power, signal, and control wiring.

C. Field quality-control test reports.

D. Operation and Maintenance Data: For electric heating cables to include in operation and maintenance manuals.

E. Warranty: Special warranty specified in this Section.

1.4 QUALITY ASSURANCE

A. Electrical Components, Devices, and Accessories: Listed and labeled as defined in NFPA 70, Article 100, by a testing agency acceptable to authorities having jurisdiction, and marked for intended use.

1.5 WARRANTY

A. Special Warranty: Manufacturer's standard form in which manufacturer agrees to repair or replace electric heating cable that fails in materials or workmanship within specified warranty period.

1. Warranty Period: 10 years from date of Substantial Completion.

PART 2 - PRODUCTS

2.1 SELF-REGULATING, PARALLEL-RESISTANCE HEATING CABLES

A. Available Manufacturers: Subject to compliance with requirements, manufacturers offering products that may be incorporated into the Work include, but are not limited to, the following:

1. Chromalox, Inc.; Wiegard Industrial Division; Emerson Electric Company.
2. Delta-Therm Corporation.
3. Easy Heat Inc.
4. Raychem; a division of Tyco Thermal Controls.
5. Thermon Manufacturing Co.

B. Heating Element: Pair of parallel No. 16 AWG, nickel-coated stranded copper bus wires embedded in crosslinked conductive polymer core, which varies heat output in response to temperature along its length. Terminate with waterproof, factory-assembled nonheating leads with connectors at one end, and seal the opposite end watertight. Cable shall be capable of crossing over itself once without overheating.

C. Electrical Insulating Jacket: Flame-retardant polyolefin.

D. Cable Cover: Stainless-steel braid, and polyolefin outer jacket with UV inhibitor.

E. Maximum Operating Temperature (Power On): 150 deg F.

F. Maximum Exposure Temperature (Power Off): 185 deg F.

G. Maximum Operating Temperature: 300 deg F.

2.2 CONTROLS

A. Remote bulb unit with adjustable temperature range from 30 to 50 deg F.

B. Snap action; open-on-rise, single-pole switch with minimum current rating adequate for connected cable.

C. Remote bulb on capillary, resistance temperature device, or thermistor for directly sensing pipe-wall temperature.

D. Corrosion-resistant, waterproof control enclosure.

2.3 ACCESSORIES

A. Cable Installation Accessories: Fiberglass tape, heat-conductive putty, cable ties, silicone end seals and splice kits, and installation clips all furnished by manufacturer, or as recommended in writing by manufacturer.

B. Warning Labels: Refer to Division 23 Section "Identification for HVAC Piping and Equipment."

C. Warning Tape: Continuously printed "Electrical Tracing"; vinyl, at least 3 mils thick, and with pressure-sensitive, permanent, waterproof, self-adhesive back.

1. Width for Markers on Pipes with OD, Including Insulation, Less Than 6 Inches: 3/4 inch minimum.
2. Width for Markers on Pipes with OD, Including Insulation, 6 Inches or Larger: 1-1/2 inches minimum.

PART 3 - EXECUTION

3.1 EXAMINATION

A. Examine surfaces and substrates to receive electric heating cables for compliance with requirements for installation tolerances and other conditions affecting performance.

1. Ensure surfaces and pipes in contact with electric heating cables are free of burrs and sharp protrusions.
2. Proceed with installation only after unsatisfactory conditions have been corrected.

3.2 INSTALLATION

A. Install electric heating cable across expansion joints according to manufacturer's written recommendations using slack cable to allow movement without damage to cable.

B. Install electric heating cables after piping has been tested and before insulation is installed.

C. Install electric heating cables according to IEEE 515.1.

D. Install insulation over piping with electric cables according to Division 23 Section "HVAC Insulation."

E. Install warning tape on piping insulation where piping is equipped with electric heating cables.

F. Set field-adjustable switches and circuit-breaker trip ranges.

G. Protect installed heating cables, including nonheating leads, from damage.

3.3 CONNECTIONS

A. Ground equipment according to Division 26 Section "Grounding and Bonding for Electrical Systems."

B. Connect wiring according to Division 26 Section "Low-Voltage Electrical Power Conductors and Cables."

3.4 FIELD QUALITY CONTROL

A. Testing: Perform tests after cable installation but before application of coverings such as insulation, wall or ceiling construction, or concrete.

1. Test cables for electrical continuity and insulation integrity before energizing.
2. Test cables to verify rating and power input. Energize and measure voltage and current simultaneously.

B. Repeat tests for continuity, insulation resistance, and input power after applying thermal insulation on pipe-mounting cables.

C. Remove and replace malfunctioning units and retest as specified above.

END OF SECTION 230533

SECTION 230900 - INSTRUMENTATION AND CONTROL FOR HVAC

PART 1 - GENERAL

1.1 SCOPE OF WORK

A. The Facility Management and Control System (BAS) Contractor shall furnish and install a fully integrated building automation system, incorporating direct digital control (DDC) for energy management, equipment monitoring and control as herein specified. The system shall include all required computer software and hardware, controllers, sensors, transmission equipment, system workstations, local panels, conduit, wire, installation, engineering, database and setup, supervision, commissioning, acceptance test, training, warranty service and, at the owner's option, extended warranty service.

B. The system shall use LonTalk® or BACnet as its native protocol. System components shall be certified by LonMark or BTL and display the LonMark or BTL logo where applicable. System components that do not have a LonMark profile shall be compatible with the LonMark standards. For each LonWorks® device that does not have LonMark certification, the device supplier must provide DRF and XIF files for the device.

C. The BAS shall be capable of total integration of the facility infrastructure systems with user access to all system data either locally over a secure Intranet within the building or by remote access by a standard Web Browser over the Internet.

D. The BAS shall demonstrate, with (3) proof sources, integration with HVAC industry open standard protocols, including LonMark, BACnet, ModBus, ASC II and Internet standard SQL database and HTTP / HTML / XML text formats.

E. The BAS shall communicate to third party systems such as air handling systems and other building management related devices using any of the open, interoperable communication protocols referenced in Paragraph D.

F. The BAS contractor shall work with the Building Analytics contractor to assist in integrating the system information together

G. All materials and equipment used shall be standard components, regularly manufactured for this and/or other systems and not custom designed especially for this project.

H. All control wiring shall be installed in conduit that is a minimum ¾ inch.

I. The system shall be an extension of the existing Siemens Talon System by Atkinson Electronics, Inc.

1.2 RELATED WORK SPECIFIED ELSEWHERE:

A. Drawings and general provisions of the Contract, including General and supplementary Conditions and Division-1 specification sections, apply to work of this section.

B. Section 230910 “Critical Air Flow” shall be provided and installed under this section

C. Section 230940 “Sequences of Operations”

D. This contractor shall work with the commissioning team as described in sections 230800 and 019113

E. Products furnished but not installed under this section:

1. Valves, flow switches, flow sensors, thermowells and pressure taps to be installed under Division 23.
2. Automatic dampers and Venturi air valves to be installed under Division 23.

F. Coordination with electrical:

1. Installation of all line voltage power wiring by division 26.
2. Each motor starter provided under Division 26, shall be furnished with individual control power transformer to supply 120 volt control power and auxiliary contacts (one N.O. and one N.C.) for use by this section.
3. Control system shall be on emergency power

1.3 QUALITY ASSURANCE

A. The system shall be furnished, engineered, and installed by the manufacturers' locally authorized representative. The controls contractor shall have factory-trained technicians to provide instruction, routine maintenance, and emergency service within 24 hours upon receipt of request.

B. At the time of bid, all BAS Application Specific Controllers and Programmable Equipment Controllers shall be listed as follows:

1. Underwriters Laboratory UL 916
2. FCC Regulation, Part 15, Class B

1.4 SUBMITTALS

A. Submit 10 complete sets of documentation in the following phased delivery schedule:

1. Valve and damper schedules
2. Equipment data cut sheets
3. System schematics, including:
   a. point to point wiring / communications.
   b. interface wiring diagrams
   c. panel layouts
   d. system riser diagrams
   e. sequence of operations
4. Software:
   a. Graphics (including samples of project specific graphics)
   b. point names
   c. point addresses
   d. point to point wiring check off lists
5. AutoCAD® compatible as-built drawings

B. Upon project completion, submit operation and maintenance manuals, consisting of the following:

1. Index sheet, listing contents in alphabetical order
2. Manufacturer's equipment parts list of all functional components of the system, disk of system schematics, including wiring diagrams
3. Description of sequence of operations
4. As-Built interconnection wiring diagrams
5. User’s documentation containing product, system architectural and programming information.
6. Trunk cable schematic showing remote electronic panel locations, and all trunk data
7. List of connected data points, including panels to which they are connected and input device (ionization detector, sensors, etc.)
8. Conduit routing diagrams
9. Copy of the warranty/guarantee
10. Operating and maintenance cautions and instructions
11. Recommended spare parts list

1.5 COMMISSIONING COORDINATION

A. Contractors shall include time as necessary to assist the commissioning agent in commissioning the project. Refer to Section 018100.

PART 2 – PRODUCTS LABORATORY

2.1 ACCEPTABLE MANUFACTURERS

A. Siemens Talon Control System by Atkinson Electronics (system shall be an extension of the existing control system)

2.2 The Facility Management Control System (BAS) shall be comprised of a network of interoperable, stand-alone digital controllers. The BAS shall incorporate LonWorks or BacNet technology. The system shall include:

A. Programmable Equipment Controllers (PEC's) for control of primary mechanical systems and distributed system applications. Controllers shall be fully programmable to create custom control solutions.

B. Network Area Controllers (NAC's) for distributed system applications, databases and networking functions.

C. Application Specific Controllers (ASC's) for control of VAV terminal units, Fan coil terminal units, Unit Vent terminal units, Heat Pump units and other terminal equipment.

D. Graphical User Interface (GUI), which includes the hardware and software necessary for a user to interface with the control system and devices.

2.3 The PEC and ASC network shall communicate at a minimum 78Kbps. The GUI and NAC shall reside on a 100 Mb Ethernet backbone.

2.4 All components and controllers supplied under this contract shall be true "peer-to-peer" communicating devices. Components or controllers requiring "polling" by a host to pass data shall not be acceptable.

2.5 Communication and integration of 3rd party LonMark and BacNet products shall be accomplished without gateways or interface devices. The 3rd party product supplier shall provide DRF and XIF files and BACnet pic statements for each device.

2.6 NETWORK AREA CONTROLLER (NAC)

A. The Network Area Controller (NAC) shall provide the interface between the field control devices, and provide global supervisory control functions over the control devices connected to the NAC. It shall be capable of executing application control programs to provide:

1. Calendar functions
2. Scheduling
3. Trending
4. Alarm monitoring and routing
5. Time synchronization
6. Integration of LonWorks controller data
7. Integration of BACnet and MODBUS networks
8. Network Management functions for all LonWorks based devices
9. Employ Niagra AX operating system

B. The NAC shall provide multiple, concurrent user access to the system and support for ODBC or SQL. A database resident on the NAC shall be an ODBC-compliant database or must provide an ODBC data access mechanism to read and write data stored within it.

C. The NAC shall support standard Web browser access via the Intranet/Internet. It shall support a minimum of 16 simultaneous users.

D. The NAC shall provide alarm recognition, storage; routing, management, and analysis to supplement distributed capabilities of equipment or application specific controllers.

1. The NAC shall be able to route any alarm condition to any defined user location whether connected to a local network or remote via dial-up, telephone connection, or wide-area network.
2. Alarm generation shall be selectable for annunciation type and acknowledgement requirements including, but not limited to:

    a. To alarm
    b. Return to normal
    c. To fault

3. Provide for the creation of an unlimited number of alarm classes for the purpose of routing types and or classes of alarms, i.e.: security, HVAC, Fire, etc.
4. Provide timed (schedule) routing of alarms by class, object, group, or node.
5. Provide alarm generation from binary object "runtime" and /or event counts for equipment maintenance. The user shall be able to reset runtime or event count values with appropriate password control.

E. Alarms shall be annunciated in any of the following manners as user defined:

1. Screen message text
2. Email of the complete alarm message to multiple recipients. Provide the ability to route and email alarms based on:

    a. Day of week
    b. Time of day
    c. Recipient

3. Pagers via paging services that initiate a page on receipt of email message
4. Graphic with flashing alarm object(s)
5. Printed message, routed directly to a dedicated alarm printer

F. The following shall be recorded by the NAC for each alarm (at a minimum):

1. Time and date
2. Location (building, floor, zone, office number, etc.)
3. Equipment (air handler #, access way, etc.)
4. Acknowledge time, date, and user who issued acknowledgement.
5. Number of occurrences since last acknowledgement.

G. Defined users shall be given proper access to acknowledge any alarm, or specific types or classes of alarms defined by the user.

H. A log of all alarms shall be maintained by the NAC and/or a server (if configured in the system) and shall be available for review by the user.

I. Provide a "query" feature to allow review of specific alarms by user defined parameters.

J. A separate log for system alerts (controller failures, network failures, etc.) shall be provided and available for review by the user.

K. An Error Log to record invalid property changes or commands shall be provided and available for review by the user.

L. Data Collection and Storage

1. The NAC shall have the ability to collect data for any property of any object and store this data for future use.
2. The data collection shall be performed by log objects, resident in the NAC that shall have, at a minimum, the following configurable properties:

    a. Designating the log as interval or deviation.

b. For interval logs, the object shall be configured for time of day, day of week and the sample collection interval.
c. For deviation logs, the object shall be configured for the deviation of a variable to a fixed value. This value, when reached, will initiate logging of the object.
d. For all logs, provide the ability to set the maximum number of data stores for the log and to set whether the log will stop collecting when full, or rollover the data on a first-in, first-out basis.
e. Each log shall have the ability to have its data cleared on a time-based event or by a user-defined event or action.

3. All log data shall be stored in a relational database in the NAC and the data shall be accessed from a server (if the system is so configured) or a standard Web Browser.
4. All log data, when accessed from a server, shall be capable of being manipulated using standard SQL statements.
5. All log data shall be available to the user in the following data formats:

   a. HTML
   b. XML
   c. Plain Text
   d. Comma or tab separated values

6. Systems that do not provide log data in HTML and XML formats at a minimum shall not be acceptable.
7. The NAC shall have the ability to archive its log data either locally (to itself), or remotely to a server or other NAC on the network. Provide the ability to configure the following archiving properties, at a minimum:

   a. Archive on time of day
   b. Archive on user-defined number of data stores in the buffer (size)
   c. Archive when buffer has reached its user-defined capacity

M. Provide and maintain an Audit Log that tracks all activities performed on the NAC. Provide the ability to specify a buffer size for the log and the ability to archive log based on time or when the log has reached its user-defined buffer size. Provide the ability to archive the log locally (to the NAC), to another NAC on the network, or to a server. For each log entry, provide the following data:

   1. Time and date
   2. User ID
   3. Change or activity: i.e., Change setpoint, add or delete objects, commands, etc.

N. The NAC shall have the ability to automatically backup its database. The database shall be backed up based on a user-defined time interval.

   1. Copies of the current database and, at the most recently saved database shall be stored in the NAC. The age of the most recently saved database is dependent on the user-defined database save interval.
   2. The NAC database shall be stored, at a minimum, in XML format to allow for user viewing and editing, if desired. Other formats are acceptable as well, as long as XML format is supported.

2.7 PROGRAMMABLE EQUIPMENT CONTROLLERS (PEC)

A. Programmable Equipment Controllers (PEC's) shall be stand-alone, multi-tasking, real-time digital control processors.

B. The PEC's shall communicate via native LonTalk or BacNet MSTP protocol. Provide a minimum of 4MB Random Access Memory in each PEC.

C. The PEC must communicate peer-to-peer with the all of the network application specific, programmable controllers and third party LonMark/BacNet devices.

D. Programming of the PEC shall be accomplished by using graphical software that incorporates drag and drop capabilities. The PEC software database must be able to execute all of the specified mechanical

system controls functions. The programming software shall be able to bundle software logic to simplify control sequencing. All values, which make up the PID output value, shall be readable and modifiable at a workstation or portable service tool. Each input, output, or calculation result shall be capable of being shared/bound with any controller or interface device on the network.

E. PEC's shall be able to execute custom, job-specific processes defined by the user, to automatically perform calculations and special control routines.

F. A single process shall be able to incorporate measured or calculated data from any and all other PEC's on the network. In addition, a single process shall be able to issue commands to points in any and all other PEC's on the network.

G. Each PEC shall support firmware upgrades without the need to replace hardware.

H. Each PEC shall continuously perform self-diagnostics, which include communication diagnosis and diagnosis of all components. The PEC shall provide both local and remote annunciation of any detected component failures, low battery conditions or repeated failure to establish communication.

I. In the event of the loss of normal power, there shall be an orderly shutdown of all PEC's to prevent the loss of database or operating system software. Non-volatile memory shall be incorporated for all critical controller configuration data and battery backup shall be provided to support the real-time clock and all volatile memory for a minimum of 72 hours.

1. Upon restoration of normal power, the PEC shall automatically resume full operation without manual intervention.
2. All PEC's control programming and databases must be stored in Flash memory, therefore eliminating data loss, down time and re-load time.

2.8 APPLICATION SPECIFIC CONTROLLERS (ASC)

A. Each Application Specific Controller (ASC) shall operate as a stand-alone LonMark/BacNet compliant controller capable of performing its specified control responsibilities independent of other controllers in the network. Each ASC shall be a minimum 16-BIT microprocessor based, multi-tasking, multi-user, real time digital control processor.

B. Controllers shall include all inputs and outputs necessary to perform the specified control sequences. Analog and digital outputs shall be industry standard signals such as 0-10V and 3-point floating control allowing for interface to a variety of industry standard modulating actuators. The ASC inputs and outputs shall consist of industry standards types. Inputs shall be electrically isolated from outputs, communications and power. All inputs shall be provided with an auto-calibrate function to eliminate sensing errors.

C. All controller sequences and operation shall provide closed loop control of the intended application. Closing control loops over the network is not acceptable.

D. The ASC must be mounted remotely from the room sensor. ASC's, that are wall mounted with integral room sensors, are not acceptable.

E. The control program shall reside in the ASC. The application program and the configuration information shall be stored in non-volatile memory with no battery back-up required.

F. After a power failure the ASC must run the control application using the current set points and configuration. Reverting to default or factory setpoints are not acceptable.

2.9 GRAPHICAL USER INTERFACE SOFTWARE (GUI)

A. Operator workstations must be capable of supporting any LonMark or BacNet compliant product. The operator shall not be able to distinguish the DDC points from different manufacturers when commanding, monitoring points or acknowledging alarms.

B. The software shall provide a multi-tasking type environment that allows the user to run several applications simultaneously. The GUI software shall run on a Windows Vista operating system. The operator shall be able to work in Microsoft Word, Excel, and other Windows based software packages, while concurrently annunciating on-line BAS alarms and monitoring information. If the software is unable to display several different types of displays at the same time, the BAS contractor shall provide at least two operator workstations at each location specified.

C. Real-Time Displays. The GUI, shall at a minimum, support the following graphical features and functions:

1. Graphic screens shall be developed using any drawing package capable of generating a GIF, BMP, or JPG file format. Use of proprietary graphic file formats shall not be acceptable. In addition to, or in lieu of a graphic background, the GUI shall support the use of scanned pictures.
2. Provide programming, engineering, and configuration tools used for the project. Duly licensed to the owner for the owners use.
3. A gallery of HVAC and automation symbols shall be provided, including fans, valves, motors, chillers, AHU systems, standard ductwork diagrams and symbols. The user shall have the ability to add custom symbols to the gallery as required.
4. Graphic screens shall have the capability to contain objects for text, real-time values, animation, color spectrum objects, logs, graphs, HTML or XML document links, schedule objects, hyperlinks to other URL's, and links to other graphic screens.
5. Graphics shall support layering and each graphic object shall be configurable for assignment to a layer. A minimum of six layers shall be supported.
6. Modifying common application objects, such as schedules, calendars, and set points shall be accomplished in a graphical manner.

    a. Schedule times will be adjusted by mouse command using a graphical slider, without requiring any keyboard entry from the operator.
    b. Holidays shall be set by mouse command using a graphical calendar, without requiring any keyboard entry from the operator.

7. Commands to start and stop binary objects shall be done by mouse command from the pop-up menu. No entry of text shall be required.
8. Adjustments to analog objects, such as set points, shall be done by mouse command using a graphical slider to adjust the value. No entry of text shall be required.

D. System Configuration. At a minimum, the GUI shall permit the operator to perform the following tasks, with proper password access:

1. Create, delete or modify control strategies.
2. Add/delete objects to the system.
3. Tune control loops through the adjustment of control loop parameters.
4. Enable or disable control strategies.
5. Generate hard copy records or control strategies on a printer.
6. Select points to be alarmable and define the alarm state.
7. Select points to be trended over a period of time and initiate the recording of values automatically.

E. On-Line Help. Provide a context sensitive, on-line help system to assist the operator in operation and editing of the system. On-line help shall be available for all applications and shall provide the relevant data for that particular screen. Additional help information shall be available through the use of hypertext. All system documentation and help files shall be in HTML format.

F. Each operator shall be required to log on to that system with a user name and password in order to view, edit, add, or delete data. System security shall be selectable for each operator. The system administrator shall have the ability to set passwords and security levels for all other operators. Each operator password shall be able to restrict the operators' access for viewing and/or changing each system application, full screen editor, and object. Each operator shall automatically be logged off of the system if no keyboard or mouse activity is detected. This auto log-off time shall be set per operator password. All system security data shall be stored in an encrypted format.

G. All graphical display shall be provided using web browser client as specified elsewhere in this specification section

H. System Diagnostics. The system shall automatically monitor the operation of all workstations, printers, modems, network connections, building management panels, and controllers. The failure of any device shall be annunciated to the operator.

I. The system will be provided with a dedicated alarm window or console. This window will notify the operator of an alarm condition, and allow the operator to view details of the alarm and acknowledge the alarm. The use of the Alarm Console can be enabled or disabled by the system administrator.

J. When the Alarm Console is enabled, a separate alarm notification window will supersede all other windows on the desktop and shall not be capable of being minimized or closed by the operator. This window will notify the operator of new alarms and un-acknowledged alarms. Alarm notification windows or banners that can be minimized or closed by the operator shall not be acceptable.

2.10 WEB BROWSER CLIENTS

A. The system shall be capable of supporting an unlimited number of clients using a standard Web browser such as Internet Explorer® or Netscape Navigator®. Systems requiring additional software (to enable a standard Web browser) to be resident on the client machine, or manufacture-specific browsers shall not be acceptable.

B. The Web browser software shall run on any operating system and system configuration that is supported by the Web browser. Web page access and control shall be from system Network Area Controllers, or the Workstation.

C. The Web browser shall provide the same system view, in terms of graphics, schedules, calendars, logs, etc., and provide the same interface methodology as is provided by the Graphical User Interface. Systems that require different views or that require different means of interacting with objects such as schedules, or logs, shall not be permitted.

D. The Web browser client shall support at a minimum, the following functions:

1. User log-on identification and password security shall be required and implemented using Java authentication and encryption techniques to prevent unauthorized access. If an unauthorized user attempts access, a blank web page shall be displayed.
2. Graphical screens developed for the GUI shall be the same screens used for the Web browser client. Any animated graphical objects supported by the GUI shall be supported by the Web browser interface.
3. HTML programming shall not be required to display system graphics or data on a Web page. HTML editing of the Web page shall be allowed if the user desires a specific look or format.
4. Storage of the graphical screens shall be in the Network Area Controller (NAC), without requiring any graphics to be stored on the client machine. Systems that require graphics storage on each client machine are not acceptable.
5. Real-time values displayed on a Web page shall update automatically without requiring a manual “refresh” of the Web page.
6. Users shall have administrator-defined access privileges. Depending on the access privileges assigned, the user shall be able to perform the following:

    a. Modify in a graphical manner, common application objects, such as schedules, calendars, and set points. Schedule times will be adjusted by mouse command using a graphical slider, without requiring any keyboard entry from the operator. Holidays shall be set by mouse command using a graphical calendar, without requiring any keyboard entry from the operator.
    b. Commands to start and stop binary objects shall be done by mouse command right-click of the selected object and selecting the appropriate command from the pop-up menu. No entry of text shall be required.
    c. View logs and charts
    d. View and acknowledge alarms

7. The system shall provide the capability to specify a user’s home page (as determined by the log-on user identification). The system shall provide the ability to limit a specific user to just their defined home page. From the home page, links to other views, or pages in the system shall be possible, if allowed by the system administrator.

8. Graphic screens on the Web Browser client shall support hypertext links to other locations on the Internet or on Intranet sites, by specifying the Uniform Resource Locator (URL) for the desired link.

2.11 LONWORKS NETWORK MANAGEMENT

A. The Graphical User Interface software (GUI) shall provide a complete set of integrated network management tools for working with LonWorks networks. These tools shall manage a database for all LonWorks devices by type and revision, and shall provide a software mechanism for identifying each device on the network. These tools shall also be capable of defining network data connections between LonWorks devices, known as “binding”.

B. Network management shall include the following services: device identification, device installation, device configuration, device diagnostics, device maintenance and network variable binding.

C. The network management tool shall also provide diagnostics to identify devices on the network, to reset devices, and to view health and status counters within devices.

D. These tools shall provide the ability to “learn” an existing LonWorks network, regardless of what network management tool(s) were used to install the existing network, so that existing LonWorks devices and newly added devices are part of a single network management database.

E. The network management database shall be resident in the Network Area Controller (NAC), ensuring that users with proper authorization have access to the network management database at all times. Systems employing network management databases that are not resident at all times within the control system shall not be accepted.

2.12 PROJECT SPECIFIC WEB PAGES:

A. Home page shall include a campus layout of the individual buildings at the site. Once an individual building is selected the following minimum web-based tree structure shall be provided:

1. Documents Page: The document page shall include the O&M Manuals for the control system in PDF format along with AutoCAD drawings for each drawing provided in the control system O&M Manual.
2. Station Functions:

   a. Logging separate sheet of station functions for a particular selected building shall be the viewing of one or more logs or the creation of logs in which any value at any point, or the mode of any point, shall be selected via the web to be trended against any other point with an adjustable frequency in seconds, minutes, hours or days.
   b. The alarm acknowledgement via the web shall allow the viewing and acknowledgement of the alarms.
   c. Audit log shall be provided via the web to show the operator actions as well as other audit logs as specified in section 2.5 Network Area Controller (NAC) paragraph “M” Data Collection and Storage.

3. Floor Plans:

   1. AutoCAD drawings of floor plans shall be provided in the control system such that via the web the user shall be able to turn layers on and off on the mechanical floor plans. These floor plans shall also include an overlay of the temperature control as-built wiring for the project showing thermostat locations, communication runs, transformer locations, controller locations, etc.
   2. Floor Display Summaries. The operator shall be able to select floor plans displaying the following formats:

      a. All zone temperatures
      b. All zone heating percentages
      c. All zone cooling percentages

d. All zone room names and numbers
e. All zones CFM delivered.

3. Upon selecting a graphical floor plan layout the web page shall show all the zone temperature sensor locations on the floor. By clicking on the zone temperature location, an individual VAV box graphic shall be displayed with the following attributes:
   a. A manual menu that shall allow the operator to manually set the air flow set point, space temperature set point, damper position, cooling percentage, heating percentage, and zero the box.
   b. A 24 hour log chart that shows space temperature history, flow history, and allows the operator to build custom charts by comparing this log to other associated selectable logs.
   c. A display of the VAV box discharge temperature, air handler discharge temperature, space temperature, and space temperature set point.
   d. A bar graph that shows actual CFM, current air flow, and current air floor set point, percentage of heating and cooling in a thermometer-like fashion and changes color based on heating or cooling mode.
   e. The damper position, reheat valve position, occupancy status, room name and heating/cooling mode shall also be shown.

4. Systems:

   1. On selecting the systems menu, a tree structure shall allow the operator to select the air handlers, boilers, chillers, control valves, pumps, heat exchangers, lab air flow valves and hoods, etc. systems associated with that building. The graphics shall also show the piping and ductwork associated with the air handler as well as the safeties, temperature sensors, humidity sensors, dampers, VFD's, associated with that fan system. See points lists for specifics.
   2. All devices that provide dynamic function in the primary equipment, i.e., fans, pumps, coils, dampers shall be dynamic in nature showing their operating status/percentage of capacity by movement on the web page.
   3. The set points for the various control loops shall be adjustable via the web page. Individual controlled devices, i.e., valves, dampers, and fans shall be controlled via the web page and be stopped or started or placed in a command state or percentage of value output.

2.13 BUILDING OPERATORS/MANAGERS WORK STATION

A. Provide a new work station to be located where directed by the owner/engineer. Minimum requirements are as follows:

   1. 3 Giga Hertz Dual Core Processor
   2. 4GB of RAM
   3. Windows 7 or Newer
   4. 5000 GB Hard Drive
   5. Flat Screen Color Monitor and Optical Mouse
   6. USB Keyboard

B. Provide one (1) portable service tool for system. Tool shall be able to connect to the system and allow access to the system graphics, alarms, and set points. User shall be able to adjust values, and place points into automatic and manual operation as well as adjust controller configuration. Tool shall have access to both the existing module, the new module and the central plant control systems

2.14 FIELD DEVICES

A. Provide automatic control valves, automatic control dampers, thermostats, time clocks, sensors, controllers, and other components as required for the complete installation of the system, except as otherwise indicated, provided published product information, designed and constructed as recommended by the manufacturer.

B. TEMPERATURE SENSORS

1. All sensors shall be provided with proof of factory calibration or be provided with detailed information as to calibrate in the field. Field calibration shall be signed off by the commissioning agent. Factory information shall be provided as to how often calibration is required and calibration procedure.
2. Temperature Sensors: Temperature sensors shall be linear precision elements with ranges appropriate for each specific application.
3. Space (room) sensors shall be available with setpoint adjustment and override switch.
4. Duct mounted averaging sensors shall utilize a sensing element incorporated in a copper capillary with a minimum length of 20 feet. The sensor shall be installed according to manufacture recommendation and looped and fastened at a minimum of every 36 inches. Freeze stat shall be set for 37 deg.
5. Sunshields shall be provided for outside air sensors.
6. Thermo-wells for all immersion sensors shall be stainless steel or brass as required for the application.

C. Humidity Sensors: Humidity sensors shall be of the solid-state type using a capacitance-sensing element. The sensor shall vary the output voltage with a change in relative humidity. Room humidity sensors shall have a minimum range of 10% to 90% ±5%. Supply air humidity sensors shall have a normal range of 10% to 90% ± 5%.

D. Pressure Sensors: The differential pressure sensor shall be temperature compensated and shall vary the output voltage with a change in differential pressure. Sensing range shall be suitable for the application with linearity of 1.5% of full scale and offset of less than 1% of full scale. Sensor shall be capable of withstanding up to 150% of rated pressure without damage. Sensor range shall not exceed 4 times the setpoint.

E. SWITCHES AND THERMOSTATS

1. The BAS Contractor shall furnish all electric relays and coordinate with the supplier of magnetic starters for auxiliary contact requirements. All electric control devices shall be of a type to meet current, voltage, and switching requirement of their particular application. Relays shall be provided with 24 VAC coils and contacts shall be rated at 10 amps minimum.
2. Duct Smoke Detectors: Duct smoke detectors shall be supplied by others with an integral auxiliary contact to be used by the BAS contractor to provide a digital input to the BAS.
3. Low Temperature Detection Thermostats: Shall be the manual reset type. The thermostat shall operate in response to the coldest one-foot length of the 20-foot sensing element, regardless of the temperatures at other parts of the element. The element shall be properly supported to cover the entire downstream side of the coil with a minimum of three loops. Separate thermostats shall be provided for each 25 square feet of coil face area or fraction thereof.
4. Differential Pressure Switches: Pressure differential switches shall have SPDT changeover contact, switching at an adjustable differential pressure setpoint.
5. Current Sensing Relays: Motor status indications, where shown on the plans point list shall be provided via current sensing relays. The switch output contact shall be rated for 30 VDC, .15 amps.
6. Flow Switches: Motor status indications, where shown on the plans point list, shall be provided via flow switches. Flow switches shall be of the paddle type equipped with SPDT contacts to establish proof of flow.

F. CONTROL VALVES

1. General: Control Valves up to 4 inches shall be sized for a 3 to 5 psi pressure drop. Valves shall be modulating, electrically or magnetically actuated, with a control rangeability of 50 to 1. These valves shall have a equal percentage flow characteristics in relationship to valve opening.
2. 4 inches to 6 inches: Valves shall be modulating electrically actuated, 2-way or 3-way as required, with a rangeability of 50 to 1. Valve body shall be flanged and shall be equipped with a handwheel, or manual position dial mounted adjacent to the valve, to allow manual positioning of the valve in the absence of control power.
3. Butterfly Valves: 2-way and 3-way butterfly valves shall be cast iron valve body, with stainless steel stem, and available with disc seal for bubble-tight shut off.

G. DAMPER ACTUATORS

1. Actuators shall be of the push-pull or rotary type of modulating, 3-point floating, or 2-position control as required by the application. The actuator shall use an overload-proof synchronous motor or an electric motor with end switches to de-energize the motor at the end of the stroke limits. Control signal shall be 24 VAC, 0-10 VDC, or 4-20 ma as required. Actuators shall be available with spring return to the normal position when required. Actuators shall have a position indicator for external indication of damper position. Actuators shall have manual override capability without disconnecting damper linkage.

H. CONTROL DAMPERS

1. Motorized dampers, unless otherwise specified elsewhere, shall have damper frames using 13 gauge galvanized steel channel or 1/8" extruded aluminum with reinforced corner bracing. Damper blades shall not exceed ten (10) inches in width or 48" in length. Blades are to be suitable for high velocity performance. Damper bearings shall be as recommended by manufacturer for application. Bushings that turn in the bearing are to be oil impregnated sintered metal. All blade edges and top and bottom of the frame shall be provided with replaceable, butyl rubber or neoprene seals. Side seals may be spring-loaded stainless steel. The seals shall provide a maximum of 1% leakage at a wide open face velocity of 1500 FPM and 4: W.C. close-off pressure. The damper linkage shall provide a linear flow or equal percentage characteristic as required. Provide Ruskin RCD 50 model.
2. Control dampers shall be parallel or opposed blade type as scheduled on drawings or outdoor and return air mixing box dampers shall be parallel blade, arranged to direct air streams towards each other. All other dampers may be parallel or opposed blade types.

I. LEVEL CONTROLS

1. Level controllers shall be Ultrasonic and have a range of 6 inches to 24 feet. Accuracy shall be .25% of the span and resolution shall be 1/8". They shall be rated for fluid temperature of –40 to +140 degrees F. The enclosure rating shall be NEMA 4X and shall be mounted on 2" NPT piping connection. They shall be temperature compensated over the above specified range. They shall be provided with a remote indicator to indicate the fluid level in feet and shall include remote relay pack for four levels of control: low level pump cutoff, low level warning, fill, and high level alarm. Remote readout shall include five-digit ID display with engineering units programmed to match the level of fluid being measured along with 11-point linearization function for display and actual tank volume in gallons, thousands of gallons, or percentage as directed by the Engineer. Remote meters shall also be manufactured by Flowline to be compatible with the Ultrasonic level transmitter. Controllers shall be Flowline Model LU30-70-0-3. Remote indication shall be Flowline model L112-1001.

J. GAS METERS

1. Gas meters shall be solid-state meters suited for commercial and industrial gas measurement applications and have no moving parts. They shall have static measurement technology and field upgrading of meter capacity without service interruption when converting to a larger flow rate capacity within the same model size. The measurement unit shall incorporate flow conditioner, jet nozzle formation and a fluidic oscillator chamber. They shall have programmable volume pulse weights. The measurement unit shall be cast aluminum.

K. ENERGY BTU MEASUREMENT SYSTEM

1. The entire Energy Measurement System shall be built and calibrated by a single manufacturer, and shall consist of a flow meter, two temperature sensors, a BTU meter, temperature thermowells, and all required mechanical installation hardware. A certificate of NIST* traceable calibration shall be provided with each system. All equipment shall be covered by the manufacturer's two year warranty.

2. BTU Meter: Provide an ONICON System-10 BTU Meter. The BTU meter shall provide the following points both at the integral LCD and as outputs to the building control system: Energy Total, Energy Rate, Flow Rate, Supply Temperature and Return Temperature. Output signals shall be either serial network (protocol conforming to BACnet® MS/TP, BACnet/IP, LONWORKS®, JCI-N2, MODBUS RTU RS485, MODBUS RTU TCP/IP, or Siemens-P1) and/or via individual analog and pulse outputs. Each BTU meter shall be factory programmed for its specific application, and

shall be re-programmable using the front panel keypad (no special interface device or computer required).

3. Temperature sensors: Temperature sensors shall be loop-powered current based (mA) sensors and shall be bath-calibrated and matched (NIST* traceable) for the specific temperature range for each application. The calculated differential temperature used in the energy calculation shall be accurate to within +0.15°F (including the error from individual temperature sensors, sensor matching, input offsets, and calculations).

4. Flow Meter: Refer to meter schedule for specific flow meter type. The flow meter shall be installed either in the supply or return pipe of the system to be measured following the manufacturer's instructions with particular attention paid to upstream and downstream straight pipe runs. Insertion type flow meters shall be provided with all installation hardware necessary to enable insertion and removal of the meter without system shutdown and shall be hand insertable up to 400 psi. For installations in non-metallic pipe, install grounding rings or probes as required.

5. Insertion Turbine Type: Provide an ONICON Model F-1200 Dual Turbine Flow Meter. The flow meter shall have two contra-rotating axial turbines, with electronic impedance-based sensing and an averaging circuit to reduce measurement errors due to swirl and flow profile distortion. Each flow meter shall be individually wet-calibrated against a primary volumetric standard that is accurate to within 0.1% and traceable to NIST*. A certificate of calibration shall be provided with each flow meter. Accuracy shall be within ± 0.5% of rate at the calibrated velocity, within ± 1% of rate over a 10:1 turndown (3.0 to 30 ft/s) and within ± 2% of rate over a 50:1 turndown (from 0.4 to 20 ft/s). Output signal shall be a 0-15 V square wave pulse. Bi-directional meters shall be FB-1200 Series and shall include an isolated contact closure output for direction.

L. Air Flow Measurement

1. The monitor/controller shall be capable of direct measurement of airflow through an outside air inlet and produce dual outputs; one representing the measured airflow, and the other to control the inlet damper.

2. The monitor/controller shall contain an integral multi-line liquid crystal display for use during the configuration and calibration processes, and to display two measured processes (volume, velocity, temperature) during normal operation. All configuration, output scaling, calibration, and controller tuning will be performed digitally in the on-board microprocessor via input pushbuttons.

3. The monitor/controller shall measure inlet airflow with an accuracy of + or – 5% of reading over a range of 150-600 FPM or 250-1000 FPM or 500-3000 fpm and not have its reading affected by the presence of directional or gusting wind or turbulence. Measured airflow shall be density corrected for ambient temperature variances, and atmospheric pressure due to site altitude.

4. The monitor/controller shall interface with existing building automation systems (BAS), accepting inputs for fan system start, economizer mode operation, and an external controller set point, and provide flow deviation alarm outputs.

5. The sensors shall be constructed of materials that resist corrosion due to the presence of salt or chemicals in the air; all non-painted surfaces shall be constructed of stainless steel. The electronics enclosure shall be NEMA 1.

6. The monitor/controller shall be the VOLU-flo/OAM as manufactured by Air Monitor Corporation, Santa Rosa, California.

PART 3 - EXECUTION

3.1 PROJECT MANAGEMENT

A. Provide a project manager who shall, as part of his duties , be responsible for the following activities;

1. Coordination between the Controls Contractor, the lab air flow control supplier, and all other trades, owner, local authorities and the design team.

2. Scheduling of manpower, materials delivery, equipment installation and checkout.

3. Maintenance of construction records such as project scheduling and manpower planning and AutoCAD or Visio of project coordination and as-built drawings.

4. Coordination/Single point of contact

3.2 INSTALLATION METHODS FOR CONTROL SYSTEM

A. Install systems and materials in accordance with manufacturer's instructions, rough-in drawings and equipment details. Install electrical components and use electrical products complying with requirements of applicable Division-26 sections of these specifications.

B. The term "control wiring" is defined to include providing of wire, conduit, and miscellaneous materials as required for mounting and connecting electric or electronic control devices.

C. To run BACnet on the Ethernet network, the installer is required to run, at minimum, plenum rated CAT 5e cabling for all runs associated with this network.

D. All exposed wiring, low and line voltage subject to mechanical damage, shall be run in conduit. Line and low voltage wiring shall be run in separate conduits. Concealed but accessible wiring, except in mechanical rooms and areas where other conduit and piping are exposed shall be run in UL plenum rated cable as approved by local codes unless expressly restricted by requirements in Division 26 specification.

1. Install all control wiring in conduit that is a minimum ¾ inch. Provide wiring in raceways inside insulated wall cavities.

2. Clearly identify all control wiring and provide “Brady” tagging using the “As-Built” I.D. for each cable. Identify control system wiring junction boxes with “medium blue” color covers.

3. Mount thermostats or room temperature sensors on outlet boxes

4. Splices in data communication wiring and temperature sensing cables are not allowed.

E. All Controllers, Relays, Transducers, etc., required for stand-alone control shall be housed in a NEMA 1 enclosure with a lockable door.

F. All control panels shall be provided with and UPS units sized for the power required by the controls in the cabinet

3.3 SYSTEM ACCEPTANCE

A. General: The system installation shall be complete and tested for proper operation prior to acceptance testing for the Owner's authorized representative. A letter shall be submitted to the Architect requesting system acceptance. This letter shall certify all controls are installed and the software programs have been completely exercised for proper equipment operation. Acceptance testing will commence at a mutually agreeable time within ten (10) calendar days of request. When the field test procedures have been demonstrated to the Owner's representative, the system will be accepted. The warranty period will start at this time.

B. Field Equipment Test Procedures: DDC control panels shall be demonstrated via a functional end-to-end test. Such that:

1. All output channels shall be commanded (on/off, stop/start, adjust, etc.) and their operation verified.

2. All analog input channels shall be verified for proper operation.

3. All digital input channels shall be verified by changing the state of the field device and observing the appropriate change of displayed value.

4. If a point should fail testing, perform necessary repair action and retest failed point and all interlocked points.

5. Automatic control operation shall be verified by introducing an error into the system and observing the proper corrective system response.

6. Selected time and setpoint schedules shall be verified by changing the schedule and observing the correct response on the controlled outputs.

C. As-Built Documentation: After a successful acceptance demonstration, the Contractor shall submit as-built drawings of the completed project for final approval. As built drawings shall include all control device locations and identifications including thermostats, controllers, panels and sensors. After receiving final approval, supply "6" complete 11x17 as-built drawing sets, together with AutoCAD diskettes to the owner.

D. Operation and Maintenance Manuals: Submit four copies of operation and maintenance manuals. Include the following:

1. Manufacturer's catalog data and specifications on sensors, transmitters, controllers, control valves, damper actuators, gauges, indicators, terminals, and any miscellaneous components used in the system.

2. A copy of the warranty.

3. Operating and maintenance cautions and instructions.

3.4 TRAINING

A. Contractor shall provide to the engineer a training class outline prior to any scheduled training.

B. Factory trained control engineers and technicians shall provide training sessions for the Owner's personnel.

C. The control contractor shall conduct six (6) four-hour training courses for the designated owner's personnel in the maintenance and operation of the control system. One class shall be given before system acceptance and the others monthly into the warranty/guarantee time period.

D. The course shall include instruction on specific systems and instructions for operating the installed system to include as a minimum:

1. HVAC system overview
2. Operation of Control System
3. Function of each Component
4. System Operating Procedures
5. Programming Procedures
6. Maintenance Procedures

3.5 WARRANTY

A. The control system shall be warranted to be free from defects in both material and workmanship for a period of one (1) year of normal use and service. This warranty shall become effective the date the owner accepts or receives beneficial use of the system as defined by Utah state law. Warranties shall begin at substantial completion.

END OF SECTION 230900

THIS PAGE INTENTIONALLY BLANK

SECTION 230910 - CRITICAL AIR FLOW

PART 1.0 - GENERAL

1.1 Description

The section 230900 – Instrumentation and Control for HVAC contractor shall be responsible for providing the parts and labor for this section except as noted below.

The critical airflow control system shall be furnished and installed to control the airflow into and out of laboratory rooms, critical spaces, and non-critical spaces. The exhaust flow rate of a laboratory fume hood shall be controlled precisely to maintain a constant average face velocity into the fume hood at either a standard/in-use or standby level based on an operator's presence in front of the fume hood. The critical control system shall vary the amount of make-up/supply air into the room to operate the spaces at the lowest possible airflow rates necessary to maintain temperature control, achieve minimum ventilation rates and maintain space pressurization in relation to adjacent spaces (positive or negative). The critical airflow control system shall interface with the Facilities Management and Control System (BAS) using the BACnet protocol.

The critical airflow system shall have a decommission mode. The chemical storage cabinet underneath the fume hood provides continuous ventilation for the storage area. The operator may decommission the hood by cleaning the hood and then placing the hood in the decommission mode set via the fume hood monitor. In this mode the fume hood venturi valve is shutoff if the sash is fully closed. If the sash is moved from the fully closed position the hood reverts to active mode, which includes standby mode of 60 feet per minute and operator mode of feet 100 feet per minute. This transition shall occur in less than 1 second.

The transformers for the system shall be provided with UPS systems to preserve the databases when the system is switching from normal power to emergency power and back again.

1.2 Acceptable Manufacturers

A. The plans and specifications for the critical airflow control system are based on systems and equipment manufactured by Phoenix Controls Corporation and is an extension on the existing critical airflow control system .

B. The laboratory airflow system provider shall be an entity that designs, develops, manufactures and sells products and services to control the environment and airflow of critical spaces using a Quality Management System registered to ISO 9001:2000.

C. In strict accordance with this specification, alternative laboratory airflow control systems and equipment shall only be considered for approval provided that the equipment be equal in every respect to the operational characteristics, capacities and intent of control sequences specified herein. Approval to bid does not relieve the laboratory airflow control system supplier from complying with the minimum requirements or intent of this specification.

D. The engineer and owner shall be the sole judges of quality and equivalence of equipment, materials, methods and life cycle cost.

E. Only those systems specifically named in this specification or by addendum shall be considered for approval. Other systems submitted after the bid opening will be returned without review.

1.3 Parts and Labor

A. The 230900 Instrumentation and Control for HVAC contractor is responsible for the work of this section except as noted is part B of this paragraph

B. Parts provided under this section but installed by others

1. PHOENIX CONTROLS air valves shall be installed by the sheet metal contractor

2. Control valves and thermo-wells shall be installed by the plumbing contractor

1.4 Compliance Schedule

A. Any alternate critical airflow control system supplier shall provide a separate compliance schedule, which shall include the section, paragraph and subparagraph of these specifications, and a direct statement to indicate compliance or noncompliance with the requirements. For all areas of noncompliance, the supplier shall describe what specific and alternative approach or approaches has been taken and document the impact this will have on the sizing of the air delivery systems, the required cooling and heating capacities, energy costs and maintenance of the building.

B. The alternate critical airflow control system supplier shall furnish a letter of compliance to the engineer, signed by a corporate officer of the critical airflow system manufacturer, certifying the compliance and noncompliance items as stated above 10 days prior to the bid.

1.5 Technical Proposal

Any alternate critical airflow control system supplier shall submit a detailed technical proposal for the owner's evaluation at the time of submitting the compliance schedule described in section 1.3. The proposal shall describe the manner of compliance with this minimum performance specification, with particular emphasis on the following areas: diversity and energy analysis, proposed equipment, experience and performance verification. This proposal shall be separate from any BAS proposal(s), and it shall include the scope of information and services detailed in paragraphs A through D of this subsection.

A. Diversity and Energy Analysis

1. Diversity analysis of the sizing of the ductwork, fans, air handlers, chillers, and boilers for the laboratory spaces. The analysis shall be based upon:

Number of Hoods	=	See plans
Occupied Hours	=	9 hr
User Presence Hours	=	1 hr
Sash Position–User Present	=	100%
Sash Position (a)–User Absent	=	100%
Sash Position (b)–User Absent	=	50%
CFM/Ton Cooling	=	350

The analysis shall provide:

Required Exhaust Capacity per Manifold	w/user absent sash position (a)
(in CFM)	w/user absent sash position (b)
Required Supply Capacity per Manifold	w/user absent sash position (a)
(in CFM)	w/user absent sash position (b)
Required Cooling Capacity (in tons)	w/user absent sash position (a)
	w/user absent sash position (b)

2. Energy analysis for the laboratory spaces. The analysis shall be based upon:

Number of hoods	=	See Plans
Occupied Hours	=	9
User Presence Hours	=	1
Sash Position–User Present	=	100%
Sash Position (a)–User Absent	=	100%
Sash Position (b)–User Absent	=	50%
$/CFM	=	3/CFM

The analysis shall provide:

Energy Costs	w/user absent sash position (a)
	w/user absent sash position (b)

B. Proposed Equipment

1. The critical airflow control system supplier shall provide a detailed proposal describing all elements of the laboratory, vivarium, critical space, and non-critical space control systems. A schematic of each layout shall be provided. The layout shall show the relations of each of the elements and provide a description of how they interact.
2. Technical specification data sheets shall be provided for all proposed system components and devices.
3. All proposed airflow control devices shall include discharge, exhaust and radiated sound power level performance obtained from testing in accordance with ARI Standard 880.

C. Experience

1. The critical airflow control system supplier shall provide a list of at least three similar critical airflow control systems installed in the state as part of this proposal.
2. The critical airflow control system supplier shall provide the names, addresses and telephone numbers of the consulting engineer and the owner's representative for each of these installations. It is understood that these individuals may be contacted regarding timely delivery, the quality of installation, the operation and performance of the equipment and the service requirements for each installation. Unsatisfactory performance or inability to provide references shall be grounds for rejection.

D. Performance Verification

The critical airflow control system supplier shall demonstrate a typical laboratory space that includes multiple fume hoods, a general exhaust and a supply airflow control device for the purpose of verifying the critical airflow control system's ability to meet the performance requirements indicated in this specification. All travel and lodging costs to witness the performance verification shall be the responsibility of the critical airflow control system supplier.

1.6 Preventive Maintenance

The laboratory airflow control system supplier shall provide at no additional cost to the owner during and after the warranty period five years of required preventive maintenance on all airflow sensors (e.g., pitot tube, flow cross, orifice ring, air bar, hot wire, vortex shedder, side wall sensors, etc.) and flow transducers provided under this section. Airflow sensors shall be removed, inspected, and cleaned annually during the five-year period to prevent inaccuracies due to long-term buildup from corrosion, lab tissues, wet or sticky particles, or other materials that foul the sensor. If impractical to remove the airflow sensors, the laboratory airflow control system supplier shall include in the proposal the cost of supplying and installing duct access doors, one for each sensor. The transducer shall be checked and recalibrated annually to ensure long-term accuracy. Note that auto-zero recalibration of transducers is not acceptable as a substitute for annual recalibration.

1.7 Warranty Period

Warranty shall commence upon the date of shipment and extend for a period of 36 months, whereupon any defects in materials or laboratory airflow control system performance shall be repaired by the supplier at no cost to the owner.

PART 2.0 - SYSTEM PERFORMANCE REQUIREMENTS

2.1 Laboratory Airflow Control System Description

A. Each laboratory shall have a dedicated laboratory airflow control system. Each dedicated laboratory airflow control system shall support a minimum of 20 network controlled airflow devices.

B. The laboratory airflow control system shall employ individual average face velocity controllers that directly measure the area of the fume hood sash opening and proportionally control the hood's exhaust airflow to maintain a constant face velocity over a minimum range of 20% to 100% of sash travel. The corresponding minimum hood exhaust flow turndown ratio shall be 5 to 1.

C. The hood exhaust airflow control device shall respond to the fume hood sash opening by achieving 90% of its commanded value within one second of the sash reaching 90% of its final position (with no more than 5% overshoot/undershoot) of required airflow. Rate of sash movement shall be from one to one and one-half feet per second.

D. The hood exhaust airflow control device shall be switched automatically between in-use and standby levels based on the operator's presence immediately in front of the hood. A presence and motion sensor shall activate the switching. The airflow control device shall achieve the required in-use commanded value in less than one second from the moment of detection with no more than a 5% overshoot or undershoot.

E. The laboratory airflow control system shall maintain specific airflow (±5% of signal within one second of a change in duct static pressure) regardless of the magnitude of the pressure change, airflow change or quantity of airflow control devices on the manifold (within 0.6" to 3.0" wc).

F. The laboratory airflow control system shall use volumetric offset control to maintain room pressurization. The system shall maintain proper room pressurization polarity (negative or positive) regardless of any change in room/system conditions, such as the raising and lowering of any or all fume hood sashes or rapid changes in duct static pressure. Systems using differential pressure measurement or velocity measurement to control room pressurization are unacceptable.

G. The laboratory airflow control system shall maintain specific airflow (±5% of signal) with a minimum 16 to 1 turndown to ensure accurate pressurization at low airflow and guarantee the maximum system diversity and energy efficiency.

2.2 Critical and Non-critical Control System Description

A. Each critical and non-critical space shall have a dedicated airflow control system. Each dedicated airflow control system shall support a minimum of 64 network controlled airflow devices.

B. The airflow control system shall maintain specific airflow (±5% of signal within one second of a change in duct static pressure) regardless of the magnitude of the pressure change, airflow change or quantity of airflow control devices on either the supply air or exhaust air manifold (within 0.3 to 3.0" WC).

C. The airflow control system shall use volumetric offset control to maintain room pressurization. The system shall maintain proper room pressurization polarity (negative or positive) regardless of any change in room/system conditions, such as rapid changes in duct static pressure. Systems using differential pressure measurement or velocity measurement to control room pressurization are unacceptable.

D. The airflow control system shall maintain specific airflow (±5% of signal) with a minimum 11 to 1 airflow turndown to ensure accurate pressurization at low airflow and assure maximum energy efficiency.

E. In the event of a power failure, airflow control devices shall fail to the last position and continue to maintain flow control within ±5% of signal within one second of a change in duct static pressure.

2.3 Airflow Control Sound Specification

A. Unless otherwise specified, the airflow control device shall not exceed the sound power levels in Tables 1, 2 and 3.

B. If the airflow control device cannot meet the sound power level specification, a properly sized silencer or sound attenuator must be used. All silencers must be of a packless design (constructed of at least 18 gauge 316L stainless steel when used with fume hood exhaust) with a maximum pressure drop at the device's maximum rated flow rate not to exceed 0.20 inches of water.

C. All proposed airflow control devices shall include discharge, exhaust and radiated sound power level performance.

Table 1. Exhaust Airflow Control Device Sound Power Level

	Exhaust Sound Power Level in dB (re: 10^{-12} watts)					
Octave Band Number	2	3	4	5	6	7
Center Frequency in Hz	125 Hz	250 Hz	500 Hz	1000 Hz	2000 Hz	4000 Hz
1000-50 CFM Device						
800 CFM @ 0.6" WC	63	55	52	54	50	49
200 CFM @ 0.6" WC	46	42	38	37	32	25
800 CFM @ 3.0" WC	73	70	64	66	65	60
200 CFM @ 3.0" WC	51	52	51	50	52	51
1500-100 CFM Device						
1200 CFM @ 0.6" WC	65	58	53	56	52	52
400 CFM @ 0.6" WC	50	45	38	39	37	31
1200 CFM @ 3.0" WC	72	70	62	65	64	60
400 CFM @ 3.0" WC	55	57	55	53	56	55
3000-200 CFM Dual Device						
2400 CFM @ 0.6" WC	63	56	55	58	54	55
800 CFM @ 0.6" WC	51	45	41	42	39	34
2400 CFM @ 3.0" WC	75	71	65	68	67	63
800 CFM @ 3.0" WC	58	58	56	56	59	58
2500-200 CFM Device						
2000 CFM @ 0.6" WC	72	64	59	59	54	53
400 CFM @ 0.6" WC	36	44	38	38	33	26
2000 CFM @ 3.0" WC	82	75	69	70	68	63
400 CFM @ 3.0" WC	52	55	55	54	51	45
800-50 CFM Shutoff Device						
800 CFM @ 0.6" WC	60	58	52	55	53	54
200 CFM @ 0.6" WC	56	52	44	46	41	37
800 CFM @ 3.0" WC	75	77	69	74	69	63
200 CFM @ 3.0" WC	60	62	58	63	57	54
1300-100 CFM Shutoff Device						
1200 CFM @ 0.6" WC	59	60	53	57	55	57
400 CFM @ 0.6" WC	50	53	44	45	41	36
1200 CFM @ 3.0" WC	71	73	65	66	64	61
400 CFM @ 3.0" WC	52	62	59	58	56	54
2600-200 CFM Dual Shutoff Device						
2400 CFM @ 0.6" WC	67	65	60	63	62	62
800 CFM @ 0.6" WC	57	54	51	54	47	42

2400 CFM @ 3.0" WC	76	80	75	80	73	69
800 CFM @ 3.0" WC	65	67	69	70	64	60

Table 2. Supply Airflow Control Device Sound Power Level (Discharge)

	Discharge Sound Power Level in dB (re: 10^{-12} watts)					
Octave Band Number	2	3	4	5	6	7
Center Frequency in Hz	125 Hz	250 Hz	500 Hz	1000 Hz	2000 Hz	4000 Hz
1000-50 CFM Device						
800 CFM @ 0.6" WC	62	57	54	58	54	51
200 CFM @ 0.6" WC	45	46	42	44	40	34
800 CFM @ 3.0" WC	72	71	67	75	72	68
200 CFM @ 3.0" WC	53	56	54	58	56	54
1500-100 CFM Device						
1200 CFM @ 0.6" WC	63	59	55	60	54	53
400 CFM @ 0.6" WC	53	49	44	49	45	39
1200 CFM @ 3.0" WC	72	73	69	77	72	68
400 CFM @ 3.0" WC	58	63	61	63	60	57
3000-200 CFM Dual Device						
2400 CFM @ 0.6" WC	64	60	58	63	56	56
800 CFM @ 0.6" WC	52	48	47	52	46	41
2400 CFM @ 3.0" WC	75	75	72	78	73	70
800 CFM @ 3.0" WC	59	62	62	66	62	60
2500-200 CFM Device						
2000 CFM @ 0.6" WC	70	63	61	61	54	49
400 CFM @ 0.6" WC	41	46	45	44	37	33
2000 CFM @ 3.0" WC	79	76	77	77	74	70
400 CFM @ 3.0" WC	53	58	60	58	49	50
800-50 CFM Shutoff Device						
800 CFM @ 0.6" WC	63	58	54	61	56	56
200 CFM @ 0.6" WC	56	53	44	50	45	41
800 CFM @ 3.0" WC	74	76	71	81	75	72
200 CFM @ 3.0" WC	60	64	59	68	64	58
1300-100 CFM Shutoff Device						
1200 CFM @ 0.6" WC	63	61	54	63	57	55
400 CFM @ 0.6" WC	50	55	46	54	47	43
1200 CFM @ 3.0" WC	72	75	69	77	72	68
400 CFM @ 3.0" WC	57	64	59	66	64	60
2600-200 CFM Dual Shutoff Device						
2400 CFM @ 0.6" WC	67	67	60	65	61	61
800 CFM @ 0.6" WC	59	56	52	59	52	47
2400 CFM @ 3.0" WC	75	81	77	84	78	76
800 CFM @ 3.0" WC	65	69	69	76	69	66

Table 3. Supply Airflow Control Device Sound Power Level (Radiated)

	Radiated Sound Power Level in dB (re: 10^{-12} watts)					
Octave Band Number	2	3	4	5	6	7
Center Frequency in Hz	125 Hz	250 Hz	500 Hz	1000 Hz	2000 Hz	4000 Hz
1000-50 CFM Device						
800 CFM @ 0.6" WC	44	41	45	41	36	34
200 CFM @ 0.6" WC	33	28	31	29	26	20
800 CFM @ 3.0" WC	53	53	56	57	55	53
200 CFM @ 3.0" WC	41	38	41	39	39	37
1500-100 CFM Device						
1200 CFM @ 0.6" WC	47	53	40	42	38	36
400 CFM @ 0.6" WC	35	39	31	34	33	26
1200 CFM @ 3.0" WC	52	60	54	60	59	53
400 CFM @ 3.0" WC	42	44	43	46	46	42
3000-200 CFM Dual Device						
2400 CFM @ 0.6" WC	58	56	45	47	43	42
800 CFM @ 0.6" WC	45	43	36	39	37	29
2400 CFM @ 3.0" WC	69	68	60	65	63	57
800 CFM @ 3.0" WC	54	53	48	51	50	48
800-50 CFM Shutoff Device						
800 CFM @ 0.6" WC	41	44	45	42	38	37
200 CFM @ 0.6" WC	36	28	37	37	34	29
800 CFM @ 3.0" WC	56	60	61	65	59	56
200 CFM @ 3.0" WC	50	48	48	52	44	40
1300-100 CFM Shutoff Device						
1200 CFM @ 0.6" WC	48	55	40	45	42	40
400 CFM @ 0.6" WC	35	45	33	37	35	31
1200 CFM @ 3.0" WC	52	63	57	60	59	54
400 CFM @ 3.0" WC	41	49	46	50	50	45
2600-200 CFM Dual Shutoff Device						
2400 CFM @ 0.6" WC	63	65	49	50	47	48
800 CFM @ 0.6" WC	52	53	42	45	42	35
2400 CFM @ 3.0" WC	71	76	68	70	67	63
800 CFM @ 3.0" WC	62	66	60	61	57	54

PART 3.0 - SYSTEM COMPONENTS

3.1 Usage Based Control® Equipment

A. For variable air volume (VAV) systems, a sash sensor shall be provided to measure the height of each vertically moving fume hood sash. A sash sensor shall also be provided for horizontal overlapping sashes. Control systems employing sidewall-mounted velocity sensors shall be unacceptable.

B. A presence and motion sensor shall be provided to determine an operator's presence in front of a hood by detecting the presence and/or motion of an operator, and to command the laboratory airflow control system from an in-use operating face velocity (e.g., 100 fpm) to a standby face velocity (e.g., 60 fpm) and vice versa.

1. The sensor shall define a detection zone that extends approximately 20" (50 cm) from the front of the fume hood. If the sensor does not detect presence and/or motion in its detection zone within five seconds, it shall

command the system to the user-adjustable standby face velocity. When the sensor detects the presence and/or motion of an operator within the detection zone, it shall command the system to the in-use face velocity within one second.

2. The sensor shall have a control circuit that adapts to its specific surroundings and adjusts automatically for inanimate objects placed within its detection zone. It shall map the area into memory and, after a period of five minutes, nullify the image of the inanimate object and return to a standby mode. When operators enter and leave the zone, the unit shall adjust automatically between in-use and standby modes. If the inanimate object is moved or taken out of the zone, the unit shall re-map the area automatically.
3. Wide area motion detectors (on the hood or room level) shall be unacceptable.

C. The airflow at the fume hood shall vary in a linear manner between two adjustable minimum and maximum flow set points to maintain a constant face velocity throughout this range. A minimum volume flow shall be set to assure flow through the fume hood even with the sash totally closed.

D. A fume hood monitor shall be provided to receive the sash sensor output and presence and/or motion signal. This same monitor shall generate an exhaust airflow control signal for the appropriate airflow control device in order to provide a constant average face velocity. Audible and separate visual alarms shall be provided for both flow alarm and emergency exhaust conditions.

3.2 Airflow Control Device—General

A. The airflow control device shall be a Venturi valve.

B. The valve assembly manufacturer's Quality Management System shall be registered to ISO 9001:2000.

C. The airflow control device shall be pressure independent over its specified differential static pressure operating range. An integral pressure independent assembly shall respond and maintain specific airflow within one second of a change in duct static pressure irrespective of the magnitude of pressure and/or flow change or quantity of airflow controllers on a manifold system.

D. The airflow control device shall maintain accuracy within ±5% of signal over an airflow turndown range of no less than;

Pressure Drop Range	Airflow	Turndown	Valve Type
0.6- 3.0-inch WC	Devices up to 1,000 CFM (472 l/s)	20 to 1	Standard
	Devices up to 1,500 CFM (708 l/s)	16 to 1	Standard
	Devices up to 2,500 CFM (1,180 l/s)	12 to 1	Standard
	Devices up to 850 CFM (401 l/s)	17 to 1	Shutoff
	Devices up to 1,300 CFM (614 l/s)	14 to 1	Shutoff
0.3- 3.0-inch WC	Devices up to 550 CFM (260 l/s)	11 to 1	Standard
	Devices up to 1,050 CFM (496 l/s)	11 to 1	Standard

E. No minimum entrance or exit duct diameters shall be required to ensure accuracy and/or pressure independence.

F. The airflow control device shall be constructed of one of the following three types:

1. Class A—The airflow control device for non-corrosive airstreams, such as supply and general exhaust, shall be constructed of 16-gauge aluminum. The device's shaft and shaft support brackets shall be made of 316 stainless steel. The pivot arm and internal mounting link shall be made of aluminum. The pressure independent springs shall be a spring-grade stainless steel. All shaft bearing surfaces shall be made of a Teflon, polyester or PPS (polyphenylene sulfide) composite.

   Sound attenuating devices used in conjunction with general exhaust or supply airflow control devices shall be constructed using 24 gauge galvanized steel or other suitable material used in standard duct construction. No sound absorptive materials of any kind shall be used.

2. Class B—The airflow control device for corrosive airstreams, such as fume hoods and biosafety cabinets, shall have a baked-on, corrosion-resistant phenolic coating. The device's shaft shall be made of 316 stainless steel with a Teflon coating. The shaft support brackets shall be made of 316 stainless steel. The pivot arm and internal mounting link shall be made of 316 or 303 stainless steel. The pressure independent springs shall be a spring-grade stainless steel. The internal nuts, bolts and rivets shall be stainless steel. All shaft bearing surfaces shall be made of a Teflon or PPS (polyphenylene sulfide) composite.

3. Class C—The airflow control device for highly corrosive airstreams shall be constructed as defined in Paragraph E.2. In addition, these devices shall have no exposed aluminum or stainless steel components. Shaft support brackets, pivot arm, internal mounting link, and pressure independent springs shall have a baked-on, corrosion-resistant phenolic coating in addition to the materials defined in paragraph E.2. The internal nuts, bolts, and rivets shall be titanium or phenolic coated stainless steel. Only devices clearly defined as “high corrosion resistant” on project drawings will require this construction.

G. Actuation

1. For electrically actuated VAV operation, a UL 916 listed electronic actuator shall be factory mounted to the valve. Loss of main power shall cause the valve to position itself in an appropriate failsafe state. Options for these failsafe states include: normally open-maximum position, normally closed-minimum position and last position. This position shall be maintained constantly without external influence, regardless of external conditions on the valve (within product specifications).

2. Constant volume valves do not require actuators.

H. The shutoff airflow control device shall have shutoff and casing leakage of no more than:

Static Pressure Across Valve in Shutoff	Airflow	Shutoff Leakage	Casing Leakage
5.0-inch WC	Shutoff devices up to 850 CFM (472 l/s)	6 CFM	0.12 CFM/ ft^2
	Shutoff devices up to 1,300 CFM (708 l/s)	6 CFM	0.12 CFM/ ft^2
	Low leakage shutoff devices up to 850 CFM (472 l/s)	0.005 CFM	0.010 CFM/ ft^2
	Low leakage shutoff devices up to 1,300 CFM (708 l/s)	0.010 CFM	0.010 CFM/ ft^2

I. The controller for the airflow control devices shall be microprocessor based and operate using peer-to-peer control architecture. The room-level airflow control devices shall function as a standalone network.

J. The room-level control network shall utilize a LonTalk communications protocol.

K. There shall be no reliance on external or building-level control devices to perform room-level control functions. Each critical airflow control system shall have the capability of performing fume hood control, pressurization control, temperature control, humidity control, and implement occupancy and emergency mode control schemes.

L. The critical airflow control systems shall have the option of digital integration with the BAS.

M. Certification

1. Each airflow control device shall be factory calibrated to the job specific airflows as detailed on the plans and specifications using NIST traceable air stations and instrumentation having a combined accuracy of no more than ±1% of signal over the entire range of measurement. Electronic airflow control devices shall be further calibrated and their accuracy verified to ±5% of signal at a minimum of 48 different airflows across the full operating range of the device.

2. Each airflow control devices shall be marked with device-specific factory calibration data. At a minimum, it should include the tag number, serial number, model number, eight-point characterization information (for electronic devices), and quality control inspection numbers. All information shall be stored by the manufacturer for use with as-built documentation.

N. Airflow control devices that are not venturi valves and airflow measuring devices (e.g., pitot tube, flow cross, air bar, orifice ring, vortex shedder, etc.) shall only be acceptable, provided these meet all the performance and construction characteristics as stated throughout this specification and:

1. The airflow control device employs transducers manufactured by Rosemount, Bailey, Bristol, or Foxboro. Accuracy shall be no less than ±0.15% of span (to equal ±5% of signal with a 15 to one turndown) over the appropriate full-scale range, including the combined effects of nonlinearity, hysteresis, repeatability, and drift over a one-year period, and temperature effect. 316L stainless steel materials shall be provided for all exhaust applications. The use of 304 stainless steel materials shall be provided for all make-up air applications.

2. Airflow sensors shall be of a multi-point averaging type, 304 stainless steel for all supply and general exhaust applications, 316L stainless steel for all fume hood, canopy, snorkel, and biosafety cabinet applications. Single point sensors are not acceptable.

3. Suppliers of airflow control devices or airflow measuring devices requiring minimum duct diameters shall provide revised duct layouts showing the required straight duct runs upstream and downstream of these devices. Coordination drawings reflecting these changes shall be submitted by the supplier of the laboratory airflow control system. In addition, suppliers shall include static pressure loss calculations as part of their submittals. All costs to modify the ductwork, increase fan sizes and horsepower and all associated electrical changes shall be borne by the laboratory airflow control supplier.

3.3 Exhaust and Supply Airflow Device Controller

A. The airflow control device shall be a microprocessor-based design and shall use closed loop control to linearly regulate airflow based on a digital control signal. The device shall generate a digital feedback signal that represents its airflow.

B. The airflow control device shall store its control algorithms in non-volatile, re-writeable memory. The device shall be able to stand-alone or to be networked with other room-level digital airflow control devices using an industry standard protocol.

C. Room-level control functions shall be embedded in and carried out by the airflow device controller using distributed control architecture. Critical control functions shall be implemented locally; no room-level controller shall be required.

D. The airflow control device shall use industry standard 24 Vac power.

E. The airflow control device shall have provisions to connect a notebook PC commissioning tool and every node on the network shall be accessible from any point in the system.

F. The airflow control device shall have built-in integral input/output connections that address fume hood control, temperature control, humidity control occupancy control, emergency control, and non-network sensors switches and control devices. At a minimum, the airflow controller shall have:

1. Three universal inputs capable of accepting 0 to 10 Vdc, 4 to 20 mA, 0 to 65 K ohms, or Type 2 or Type 3 10 K ohm @ 25 degree C thermistor temperature sensors.
2. One digital input capable of accepting a dry contact or logic level signal input.
3. Two analog outputs capable of developing either a 0 to 10 Vdc or 4 to 20 mA linear control signal.
4. One Form C (SPDT) relay output capable of driving up to 1 A @ 24 VAC/VDC.

G. The airflow control device shall meet FCC Part 15 Subpart J Class A and be UL916 listed.

H. The venturi valves shall come equipped with a differential pressure transducer that measures the pressure drop across the valve. This value shall be and input into the valve DDC controller. The value shall be linked to the BAS system. The BAS contractor shall display the value on the system graphics for each valve.

3.4 Two-position Exhaust Airflow Control Device

The airflow control device shall maintain a factory calibrated fixed maximum and minimum flow set point based on a switched signal. Two-position devices requiring feedback shall generate a 0 to 10 volt feedback signal that is linearly proportional to its airflow. All two-position devices shall be either networked or hard-wired into the room-level network so as to be considered under pressurization control.

3.5 Laboratory Office Airflow Control Device

The airflow control device shall maintain a temperature set point by controlling the airflow and the reheat valve (if required) in response to a room temperature sensor. An additional output shall be provided for supplementary cooling or heating of the office space. If the office airflow supply device is not required for make-up airflow control for fume hoods, then the one-second speed of response and fail-safe conditions required of the laboratory airflow control system shall not apply.

3.6 Constant Volume Airflow Control Device

A. The airflow control device shall maintain a constant airflow set point. It shall be factory calibrated and set for the desired airflow. It shall also be capable of field adjustment for future changes in desired airflow.

B. Laboratory airflow control systems suppliers not employing constant volume venturi airflow control valves shall provide pneumatic tubing or electrical wiring as required for their devices.

3.7 Local Display Unit

A. The control system shall have an optional local display option that allows control and system variables to be displayed on a user interface terminal device. The Local Display Unit shall connect to the room-level network and provide access to all room-level control data.

B. The display unit shall be powered by 24 Vac or 24 Vdc.

C. The Local Display Unit shall have the provisions of being flush mounted or surface mounted either directly to a standard electrical enclosure or DIN rail. Electrical conductors shall terminate inside the display module housing to a pluggable terminal block.

D. The display unit shall utilize an LCD display with variable contrast adjustment and backlighting to adapt the display to various lighting conditions.

E. The display unit shall provide a means of entering and displaying a unique location descriptor that may be used to identify the location and/or function of the display unit. The descriptor shall allow up to two lines of at least 13 alphanumeric characters to be entered in the description field.

F. The display unit shall allow access to pertinent flow, temperature, humidity, pressure data, as well as occupancy and emergency mode control status, and current device or system alarm status. Data shall be viewable in units of measure appropriate for users of the system.

G. The display unit shall have the ability to display up to 250 parameters, organized into display screens of up to five parameters per screen. Each screen shall have the ability to have a descriptive name of up to 16 alphanumeric characters for ease of navigation. Each parameter being displayed shall have the ability to include such information as:

a. Descriptive tag (up to 13 alphanumeric characters).

b. Present value, which may be read directly off the network, or conditioned with a fixed multiplier and/or offset to scale the value for the desired units of measure.

c. Units of measure, which are configurable based on local user conventions.

H. Set points and editable control parameters shall be viewable on the Local Display Unit. The user shall have the ability to enable a pass code to prevent unauthorized changes to set points and editable control parameters.

I. All Labs containing Biological Safety Cabinets require Local Display Units

3.8 Exhaust and Supply Tracking Pair Device Controller

A. One controller shall be supplied for both the supply airflow control device and the corresponding exhaust air control device. The controller shall be a microprocessor-based design and use closed-loop control to linearly regulate airflow based on a digital control signal. The device shall generate a digital feedback signal that represents its airflow.

B. In flow tracking applications, where an exhaust device is tracking a supply device, flow data for each device shall be downloaded to the controller in the factory.

C. The airflow control device shall store its control algorithms in non-volatile, rewritable memory. The device shall be able to stand alone or to be networked with other room-level digital airflow control devices through an industry standard protocol.

D. Room-level flow tracking control functions shall be embedded in and executed by one controller mounted on one of the airflow devices.

E. The room-level control network shall communicate by using the LonTalk® /BACnet protocol. The controller must be a LONMARK certified device utilizing the Space Comfort Controller, Variable Air Volume (SCC-VAV Object type 8502) profile or a BTL certified device .

F. The airflow control device shall use 24 Vac power ±15%, the industry standard.

G. The airflow control device shall be able to connect a notebook PC commissioning tool. Every node on the network shall be accessible from any point in the system.

H. The airflow control device shall have integral input/output for the following functions: temperature control, humidity control, occupancy control, emergency control, shut-off control, and non--network sensor switches and control devices. At a minimum, the airflow controller shall have:

1. Base models shall have three universal inputs capable of accepting 0 to 10 Vdc, 4 to 20 mA, 0 to 65 K ohms, or Type 2 or Type 3, 10 K ohm @ 25 degree C; thermistor temperature sensors available for space temperature, set point lever adjust and discharge air temperature.
2. Expanded models shall have five universal inputs capable of accepting 0 to 10 Vdc, 4 to 20 mA, 0 to 65 K ohms, or Type 2 or Type 3, 10 K ohm @ 25 degree C, thermistor temperature sensors available for space temperature, set point lever adjust and discharge air temperature, humidity control (UI 4 and 5) and pressure monitoring (UI 4 and 5).
3. One digital input capable of accepting a dry contact or logic-level signal input, which may be used for occupancy override via a local room-level sensor.
4. All inputs shall have an accuracy of ± 1% F.S.
5. All models shall have two analog outputs capable of developing either a 0 to 10 Vdc or 4 to 20 mA linear control signal, to be available for duct reheat and ancillary room heat (i.e., fin tube radiation, radiant heat panels, each with its own independent PID control loops).
6. All models shall have one floating point Triac® output available for proportional reheat coil control valve operation. This output shall have a rating of 6 VA Max at 24 VAC.
7. All models shall have one Form C (SPDT) relay output capable of driving up to 1 A @ 24 Vac/Vdc to be available for local audio/visual alarms.
8. All outputs shall have the following accuracies:
   - 0 to 10 Vdc- ± 1% F.S. into 10 K ohms minimum
   - 4 to 20 mA- ±1% F.S. into 500 ohms, +0 ohms/ -50 ohms

I. The airflow control device shall meet the following agency compliance requirements: FCC Part 15 Subpart J Class A, CE and CSA.

J. The venturi valves shall come equipped with a differential pressure transducer that measures the pressure drop across the valve. This value shall be and input into the valve DDC controller. The value shall be linked to the BAS system. The BAS contractor shall display the value on the system graphics for each valve.

3.9 Control Functions

A. The airflow control devices shall utilize peer-to-peer, distributed control architecture to perform room-level control functions. Master-slave control schemes shall not be acceptable. Control functions shall include, at a minimum, pressurization, temperature, humidity control, as well as respond to occupancy and emergency control commands.

B. Pressurization Control

The critical airflow control system shall control supply and auxiliary exhaust airflow devices in order to maintain a volumetric offset (either positive or negative). Offset shall be maintained regardless of any change in flow or static pressure. This offset shall be field adjustable and represents the volume of air, which will enter (or exit) the room from the corridor or adjacent spaces.

The pressurization control algorithm shall sum the flow values of all supply and exhaust airflow devices and command appropriate controlled devices to new set points to maintain the desired offset. The offset shall be adjustable.

The pressurization control algorithm shall consider both networked devices, as well as:

1. Up to three non-networked devices providing a linear analog flow signal.
2. Any number of constant volume devices where the total of supply devices and the total of exhaust devices may be factored into the pressurization control algorithm.

Volumetric offset shall be the only acceptable means of controlling room pressurization. Systems that rely on differential pressure as a means of control shall provide documentation to demonstrate that space pressurization can be maintained if fume hood sashes are changed at the same time a door to the space is opened.

The pressurization control algorithm shall support the ability to regulate the distribution of total supply flow across multiple supply airflow control devices in order to optimize air distribution in the space.

C. Temperature Control

The critical airflow control system shall regulate the space temperature through a combination of volumetric thermal override and control of reheat coils and/or auxiliary temperature control devices. The laboratory control system shall support up to four separate temperature zones for each pressurization zone. Each zone shall have provisions for monitoring up to five temperature inputs and calculating a straight-line average to be used for control purposes. Separate cooling and heating set points shall be writeable from the BMS, with the option of a local offset adjustment.

Temperature control shall be implemented through the use of independent primary cooling and heating control functions, as well as an auxiliary temperature control function, which may be used for either supplemental cooling or heating. Cooling shall be provided as a function of thermal override of conditioned air with both supply and exhaust airflow devices responding simultaneously so as to maintain the desired offset. Heating shall be provided through modulating control of a properly sized reheat coil.

The critical airflow control system shall also provide the built-in capability for being configured for hot deck/cold deck temperature control.

The auxiliary temperature control function shall offer the option of either heating or cooling mode and to operate as either a standalone temperature control loop, or staged to supplement the corresponding primary temperature control loop.

D. Occupancy Control

The critical airflow control system shall have the ability to change the minimum ventilation and/or temperature control set points, based on the occupied state, in order to reduce energy consumption when the space is not occupied. The occupancy state may be set by either the BAS as a scheduled event or through the use of a local occupancy sensor or switch. The critical airflow control system shall support a local occupancy override button that allows a user to override the occupancy mode and set the space to occupy for a predetermined interval. The override interval shall be configurable from one to 1440 minutes. The local occupancy sensor/switch or bypass button shall be given priority over a BMS command.

E. Emergency Mode Control

The critical airflow control system shall provide a means of overriding temperature and pressurization control in response to a command indicating an emergency condition exists, and airflow control devices are to be driven

to a specific flow set point. The system shall support up to four emergency control modes. The emergency control modes may be initiated either by a local contact input or BAS command.

Once an emergency mode is invoked, pressurization and temperature control are overridden for the period that the mode is active. Emergency modes shall have a priority scheme allowing a more critical mode to override a previously set condition.

F. Local Alarm Control

The critical airflow control system shall provide the means of summing selective alarm activity at the room-level network and generating a local alarm signal. The local alarm signal may be directed to any available output, as well as to the BAS. The alarm mask may be configured differently for each room-level system.

G. Fume Hood Control

Airflow devices intended to control the face velocity of a fume hood shall have the ability to interface directly with the fume hood monitoring device. The airflow control device shall:

1. Accept command inputs to regulate the flow accordingly and make this command value available to the BAS.
2. Accept a sash position signal and make this value available to the BAS.
3. Accept a Usage Based Control signal to indicate user presence and make this signal available to the BAS.
4. Provide a flow feedback signal to the fume hood monitor, which may be used for calculating face velocity or to confirm the airflow device has achieved the proper flow rate and make this value available to the BMS.
5. Provide alarm signals to the fume hood monitor in the event the airflow device is unable to achieve the proper flow rate, there is a loss of static pressure indicating improper fan operation, or there is a loss of power to the airflow control device, in order to provide a local alarm indication.

   The fume hood airflow control device shall respond to changes in sash position and user presence within one second, in order to provide a constant 100-feet-per-minute face velocity when the fume hood is in use.

H. Fume Hood Decommissioning Mode

When a hood is not going to be used for an extended period of time the owner will have the option of putting it into a decommissioned state. All hazardous material is removed from the hood and the sash is fully closed. The owner then uses the fume hood monitor to enable the decommissioned mode. The hood valve then moves to its closed position. On a standard valve this will be the minimum flow that the valve was designed for. On a shut-off valve this will be completely closed. The fume hood monitor will display “OFF” when the hood is placed in the decommissioned mode. The hood will stay in this state until the sash is moved. When the sash is moved the valve returns to its normal operating state and position within one second.

I. The critical airflow control system shall be segregated into subnets to isolate network communications to ensure room-level control functions and BAS communications are carried out reliably.

J. The critical airflow control system shall support at least 35 networked devices in each sub net.

K. All points shall be available through the interface to the FMSC for trending, archiving, graphics, alarm notification and status reports. Critical airflow control system performance (speed, stability and accuracy) shall be unaffected by the quantity of points being monitored, processed or controlled.

L. Refer to the BAS specification for the required input/output summary for the necessary points to be monitored and/or controlled.

3.10 Start-up and Commissioning Tool (Separate from the BMS Interface)

A. The critical airflow control manufacturer shall provide to the owner a start-up and commissioning tool separate from any tools provided by the BAS contractor. The tool shall be a thin Client application that will allow access to the air flow control system through the customer's computer network. The access to the system must be web enabled and the interface shall be through the use of standard internet browsers.

B. The tool shall be graphical based and allow for the adjustment of all set-up parameters.

C. A floor plan shall be provided that allows the operator to see the location of each pressurization zone in the building. The area will display the space temperature and or supply/exhaust flows for each area.

D. A Schematic shall be provided for each pressurization zone. The schematic shall show the following;

1. All air flow devices i.e. hood valves, supply valves, general exhaust valves, etc. The flow and set-point valves for each device shall be displayed. The total supply, total exhaust, offset command, and offset value shall be shown as well
2. All temperature and humidity information that is controlled by the system shall also be displayed including but not limited to, supply duct temperature, heating coil valve position, space temperature, space temperature set point, percent heating or cooling demand, occupied/unoccupied status
3. A table of emergency modes shall be shown on the graphic at what the status of the mode is

E. By selecting a valve on the schematic the operator will be taken to the parameter set-up pages for that valve

3.11 Interface to Building Management Systems

A. The critical airflow control system network shall have the capability of digitally interfacing with the BAS. The required software interface drivers shall be developed and housed in a dedicated interface device furnished by the laboratory airflow control system supplier.

B. All room-level points shall be available to the BMS for monitoring or trending. The gateway shall maintain a cache of all points to be monitored by the BAS. The room-level airflow control devices shall update this cache continually.

C. Multiple BACnet IP gateways shall be provided in order to connect to the building-level network

D. Interface to Building Management Systems

1. LON Interface – The airflow control system network shall be LonMark certified and interface digitally with BAS via a BACnet IP gateway.
2. Points list

The following points shall be available for integration with the BAS at a minimum. Any other points used by the system in its control sequences, but not shown here shall also be made available.

Description	Network Variable Type (SNVT)	Network Variable (NV) Name
Space Temperature sensor input	SNVT_temp_p	nviSpaceTemp
Occupied Temperature set point input	SNVT_temp_p	nviTempSetpt
Occupancy override input	SNVT_occupancy	nviOccOverride
Occupancy Sensor input	SNVT_occupancy	nviOccSensor
Application mode command input	SNVT_hvac_mode	nviApplicMode
Unoccupied cooling temperature set point	SNVT_temp_p	nviUnoccCoolStPt
Unoccupied heating temperature set point	SNVT_temp_p	nviUnoccHeatStPt

Auxiliary temperature set point input	SNVT_temp_p	nviAuxTempSetPt
Local Temperature set point lever enable/scaling input	SNVT_switch	nviLclLeverEbl
Unit HVAC status output	SNVT_hvac_status	nvoUnitStatus
Effective space temperature set point output	SNVT_temp_p	nvoEffTempSetPt
Effective occupancy mode status output	SNVT_occupancy	nvoEffOccMode
Discharge air temperature output	SNVT_temp_p	nvoDischAirTemp
Terminal load output	SNVT_lev_percent	nvoterminalLoad
Auxiliary temperature control loop output	SNVT_switch	nvoAuxTempCmd
BAS Zone flow offset set point input	SNVT_flow_f	nviFlowOffsetCmd
BAS minimum supply flow set point input	SNVT_flow	nviMinSupFlowCmd
BAS HVAC flow override command input	SNVT_hvac_overid	Nviflowoverride
BAS HVAC emergency override input	SNVT_hvac_emerg	nviHvacEmergCmd
IAQ command input	SNVT_lev_percent	nviAQCmd
Additional flow #1 input	SNVT_flow	nviFlow_1
Additional flow #2 input	SNVT_flow	nviFlow_2
Zone total supply flow output	SNVT_flow	nvoTotalSupFlow
Zone total exhaust flow output	SNVT_flow	nvoTotalExhFlow
Zone volumetric offset feedback output	SNVT_flow_f	nvoFlowOffset
Effective zone volumetric offset set point output	SNVT_flow_f	nvoEffFlwOffstSP
Supply valve flow feedback output	SNVT_flow	nvoMainValveFlow
Exhaust valve flow feedback output	SNVT_flow	nvoTrkValveFlow
Effective supply valve flow set point output	SNVT_flow	nvoEffMainFlowSP
Effective exhaust valve flow set point output	SNVT_flow	nvoEffTrkFlowSP
Space relative pressure output	SNVT_press_p	nvoPressure
BAS AO port 1 override input	SNVT_switch	nviAOCmd_1
BAS AO port 2 override input	SNVT_switch	nviAOCmd_2
BAS DO port override input	SNVT_switch	nviDOCmd
BAS floating point drive override input	SNVT_switch	nviFloatDriveCmd
Current alarm status of all alarm bits output	SNVT_state_64	nvoAlarmState
Universal input port 1 feedback output	SNVT_count_inc	nvoUI_1
Universal input port 2 feedback output	SNVT_count_inc	nvoUI_2
Universal input port 3 feedback output	SNVT_count_inc	nvoUI_3
Universal input port 4 feedback output	SNVT_count_inc	nvoUI_4
Universal input port 5 feedback output	SNVT_count_inc	nvoUI_5

Digital input port feedback output	SNVT_switch	nvoDI
Baseboard Radiant output	SNVT_bb	nvoBaseboard

Part 4.0 Execution

4.1 Installation

A. The BAS contractor (Section 230900) shall install the sash sensors, interface boxes, presence and motion sensor, and fume hood monitor on the fume hood under initial supervision of the laboratory airflow control system supplier. Reel-type sash sensors and their stainless steel cables shall be hidden from view. Bar-type sash sensors shall be affixed to the individual sash panels. Sash interface boxes with interface cards shall be mounted in an accessible location.

B. The BAS contractor shall install all routers and repeaters in an accessible location in or around the designated laboratory room.

C. The BAS contractor shall install an appropriately sized and fused 24 Vac transformer suitable for NEC Class II wiring.

D. The BAS contractor shall install 20 psi clean, dry pneumatic supply air to all airflow control devices, where required.

E. All cable shall be furnished and installed by the BAS contractor. The BAS contractor shall terminate and connect all cables as required. The BAS contractor shall utilize cables specifically recommended by the laboratory airflow controls supplier.

F. The mechanical contractor under Division 23 shall install all airflow control devices in the ductwork and shall connect all airflow control valve linkages.

G. The mechanical contractor under Division 23 shall provide and install all reheat coils and transitions.

H. The mechanical contractor under Division 23 shall provide and install insulation as required.

I. Each pressurization zone shall have either a dedicated, single-phase primary circuit or a secondary circuit disconnect.

4.2 System Start-up and Training

A. System start-up shall be provided by a factory-authorized representative of the critical airflow control system manufacturer. Start-up shall include calibrating the fume hood monitor and any combination sash sensing equipment, as required. Start-up shall also provide electronic verification of airflow (fume hood exhaust, supply, make-up, general exhaust or return), system programming and integration to BAS system.

B. The balancing contractor shall be responsible for final verification and reporting of all airflows.

C. The critical airflow control system supplier shall furnish a minimum of eight hours of owner training by factory trained and certified personnel. The training will provide an overview of the job specific airflow control components, verification of initial fume hood monitor calibration, general procedures for verifying airflows of air valves and general troubleshooting procedures. The class will also show owner personnel step to replacing and reprogramming valves.

D. Operation and maintenance manuals, including as-built wiring diagrams and component lists, shall be provided for each training attendee.

4.3 System Commissioning

A. The BAS contractor shall provide a trained system technician to assist in the commissioning of the laboratory air systems as described in sections 230800 and 019113

END OF SECTION 230910

SECTION 230940 - SEQUENCES OF OPERATION AND POINTS LIST

PART 1.0 SEQUENCES OF OPERATION

1.1 General

A. These sequences define how the equipment provided in sections 230900 and 230910 shall interface with the equipment provided on this project.

B. The 230900 contractor is responsible for this section of the specifications

1.2 AHU 1&2 Variable Supply Air Handler Units

A. Modes of Operation

1. NORMAL MODE – The units shall operate continuously. Both units shall operate in parallel and each unit shall operate subject to its own safety circuit. The safety circuit is composed of a low temperature switch, high duct static pressure switch, and a fire alarm system interlock.

B. Supply Fan Operation

1. When the supply AHU is enabled, the isolation dampers shall open, an end-switch on the damper actuator shall prevent fan operation until the damper are open 100%.
2. A differential pressure sensor shall be located 2/3 of the distance from the supply fan. The differential pressure reading from the sensor shall be an input into a PID control loop on a DDC controller. The control shall compare the supply duct differential pressure with the supply duct static pressure sensor setpoint (1.5”wc adjustable). The DDC controller shall modulate the speed of the supply fan using the speed signal to the VFD for the supply fan to maintain the supply duct static pressure setpoint.

C. Heat Recovery Coil Control

1. Preheat Mode – When the outside air temperature is below 55 degrees F (adjustable), the heat recovery system shall be enabled. The system pump shall be on. The heat recovery bypass valve shall modulate to provide 55 degrees F (adjustable) coil discharge temperature. If the glycol temperature, entering the heat reclaim coil, falls below 32 degrees F, the valve shall modulate toward the bypass position to prevent the glycol from calling below 30 degrees F (adjustable)
2. Precooling Mode – When the outside air temperature is 80 degrees F or above, the heat recovery system shall be enabled. The system pump shall be on and the bypass valve shall be open to recover exhaust cooling energy.
3. Disabled – When the outside air temperature is between 55 and 80 degrees F the heat recovery system shall be off. The system pump shall be off.

D. Hoar Frost and Pre-Heat Coil Control

1. When the outside air temperature falls below 35 degrees F, a DDC controller shall monitor the pressure drop across the Hoar Frost coil. When the measured pressure drop across the coil exceeds 0.2 “WC (adjustable) the controller shall open the hot water valve. The valve shall remain open until the pressure drop across the coil returns to 0.1 “WC.
2. When then outside air temperature falls below 55 degrees F, the preheat coil shall be used as the second stage of heating after the heat recovery coil. The DDC controller shall monitor the coil discharge air temperature sensor located after the pre-heat coil. The controller shall compare the discharge air temperature to the pre-heat coil discharge air temperature setpoint (55 degrees F adjustable). The controller shall use a PID loop for the comparison. The controller shall then modulate the pre-heat coil control valve to maintain the coil discharge air setpoint.

E. Discharge Air Temperature Control

1. <u>Evaporative Section</u> –
   a. When the outside air temperature is above 50 degrees F (adjustable) the spray pump for the

evaporative section shall be enabled as the first stage of cooling. The DDC controller shall monitor the return humidity sensor. If the return humidity rises above 50% then the evaporative stage shall be disabled for the remainder to the day.

b. A purge pump shall be located in the basin of the evaporative section. The purge pump shall be enabled for one minute each half hour of operation. The DDC controller shall modulate the bypass damper to maintain the leaving air temperature setpoint.

c. When the evaporative section is disabled for the day the DDC controller shall open the drain valve and open the flush valve to flush the evaporative media.

2. Indirect Cooling Coil Control – The DDC controller shall monitor the discharge air temperature sensor located after the cooling coil. The controller shall compare the discharge air temperature so the discharge air temperature setpoint (55 degrees F adjustable). The controller shall modulate the indirect coil control valve to maintain the discharge temperature setpoint.

3. Chilled Water Coil – When the indirect coil valve is fully open and the discharge air temperature is above the discharge air temperature setpoint by more the two (2) degrees, the controller use the chilled water coil as the third stage of cooling. The DDC controller shall monitor the discharge air temperature sensor located after the chilled water coil. The controller shall compare the discharge air temperature to the discharge air temperature setpoint using a PID control loop. The controller shall modulate the chilled water coil control valve to maintain the discharge air temperature setpoint.

4. The controller shall maintain the cooling stages such that the first stage is the evaporative stage, then the indirect cooling stage, and last of all is the chilled water stage.

F. System Alarms – the following alarms shall be monitored by the control system

1. Low temperature switch – a low temperature switch shall be installed after the pre-heat coil. If the leaving temperature falls below the setpoint of 37 degrees F (adjustable) in any one foot section of the sensor the switch shall signal an alarm condition. The switch shall be hardwired such that the supply fans are shut down, the isolation dampers are closed, and the hot water valve is opened. An alarm shall be sent to the building operator via the BAS system

2. High Duct static pressure switch – a high duct static pressure switch shall be located in the supply discharge of the unit. It shall be hard-wired to shut-down the supply fans. An alarm shall be sent to the building operator via the BAS system

3. Fire Alarm Interlock Relay – shall be provided by the fire alarm system contractor. The fire alarm contractor shall program the relay for the conditions when the units are to shut-down. When the relay opens the supply fans shall be hard-wired to shut down. An alarm shall be sent to the building operator via the BAS system

4. Filter differential pressure sensors – a differential pressure transducer shall measure the differential pressure across the filters. When the differential pressure drop exceeds the dirty filter setpoint of 1”wc (adjustable) an alarm shall be sent to the building operator via the BAS.

5. Low Duct Static Pressure – When the supply duct static pressure is more the 20% below the setpoint, an alarm shall be sent to the building operator via the BAS system.

6. Heat Recovery System Glycol Temperature – if the glycol temperature in the heat recovery loop falls below 25 degrees F (Adjustable) an alarm shall be sent to the building operator via the BAS system

1.3 AHU 3&4 Exhaust Air Handler Units

A. Modes of Operation

1. NORMAL MODE – The exhaust units shall operate continuously with their associated supply fans. Both units shall operate in parallel and each unit shall operate subject to its own safety circuit. The safety circuit is composed of a low pressure cut-out switch.

B. Exhaust Fan Operation

1. Whenever a supply fan is in operation it’s associated exhaust AHU is enabled, the isolation dampers shall open, an end-switch on the damper actuator shall prevent fan operation until the damper are open 100%. If the fan fails to start an alarm shall be sent to the building operator via the BAS system.

2. A differential pressure sensor shall be located 2/3 of the distance from the exhaust fans. The differential pressure reading from the sensor shall be an input into a PID control loop on a DDC controller. The controller shall compare the exhaust duct differential pressure with the exhaust duct static pressure sensor setpoint (1.5”wc adjustable). The DDC controller shall modulate the speed of the exhaust fans using the speed signal to the VFD to maintain the exhaust duct static pressure setpoint.

3. A DDC controller shall monitor the static pressure in the exhaust static system via a differential pressure sensor located there. The controller shall compare the differential pressure to the stack static pressure setpoint using a PID. The controller shall then modulate the static bypass damper to maintain the stack static pressure setpoint

C. System Alarms – the following alarms shall be monitored by the control system

1. Low pressure Cut-out switch – The switch shall be hardwired such that the exhaust fans are shut down and the isolation dampers are closed. An alarm shall be sent to the building operator via the BAS system
2. Fire Alarm Interlock Relay – shall be provided by the fire alarm system contractor. The fire alarm contractor shall program the relay for the conditions when the units are to shut-down. When the relay opens the supply fans shall be hard-wired to shut down. An alarm shall be sent to the building operator via the BAS system
3. Filter differential pressure sensors – a differential pressure transducer shall measure the differential pressure across the filters. When the differential pressure drop exceeds the dirty filter setpoint of 1”wc (adjustable) an alarm shall be sent to the building operator via the BAS.

1.4 Building Pressurization

A. The building differential pressures shall be monitored at each floor. The supply air valves shall maintain a supply air flow setpoint that is 10% (adjustable) above the amount of air needed to supply the laboratory offset air.

1.5 Glycol Chilled Water System (air cooled chiller)

A. When the glycol (air-cooled) chiller receives a request for chilled water from one of the fan coil units, it shall be enabled by the BAS system. The chillers pumps shall be interlocked to operate whenever the chiller is enabled. Once enabled the chiller shall run for a minimum of one hour.

B. The BAS system shall monitor the supply and return temperatures for the primary and secondary loops. An alarm shall be sent out if either supply temperature exceeds the alarm setpoint.

1.6 Central Plant Chilled Water System

A. The primary chilled water pump for each chiller shall be enabled whenever its respective chiller is enabled.

B. Module 2 secondary chilled water pumps

1. The lead secondary pump shall be enabled whenever the outside air temperature is above 60 degrees F and one of the AHU’s is calling for chilled water
2. The lead pump shall operate continuously. If the lead pump fails then the lag pump shall be enabled. An alarm shall be sent to the building operator that the lead pump has failed via the BAS system. The pump in the lead position shall be rotated every month (adjustable by the building operator)
3. A differential pressure sensor shall be located at the in module 2 and shall monitor the pressure between the supply and return chilled water pressures. A DDC controller shall compare the reading using a PID loop to the system differential pressure setpoint (10 psi adjustable). The controller shall then modulate the speed of the lead pump via a speed control signal to the pump VFD. If the lead pump cannot meet the differential pressure setpoint, the lag pump shall be enabled and the pumps shall operate in parallel.

C. NORMAL CHILLER STAGING OPERATION

1. On a call for cooling CH-4 (new 30%) chiller shall be enabled as the first chiller stage. The BAS shall monitor the chiller loading via the BACnet interface to the chiller. When the chiller is loaded to 90% then CH-3 (new 70%) chiller shall be enabled as the second chiller stage. The two chillers shall then operate in parallel. When the two chillers are loaded to 90% the CH-1 (Existing chiller) shall be enabled as the third stage, the remaining chiller CH-2 shall be enabled when the three chillers are loaded to 90%.
2. The chillers shall be disabled as the load at each stage reaches 40% in the reverse order that they were enable such that CH-4 is the last chiller to be disabled.
3. The positions of CH-1 and CH-2 shall be rotated every month (adjustable)

E. CHILLER CONDENSER SYSTEMS

1. Each chiller condenser pump shall be interlocked to run when their respective chillers are enabled.
2. A DDC controller shall monitor the temperature via a temperature sensor located in the condenser water supply loop. The controller shall compare the condenser water supply temperature to the condenser water supply temperature setpoint of 75 degrees F (adjustable). The controller shall modulate the condenser water control valve to maintain the required setpoint.

G. TOWER OPERATION

1. The cooling tower fan and tower pumps shall operate when the outside air temperature is above 50 degrees F (adjustable). A temperature sensor in the discharge of the towers shall monitor the discharge temperature. A DDC controller shall compare the discharge temperature to the tower discharge temperature setpoint of 45 degrees F (adjustable). The DDC controller shall modulate the speed of the tower fan to maintain the discharge setpoint.
2. The lead tower shall be enabled first, If it is unable to maintain the discharge temperature, then the second tower shall be enabled. When the speed of the fans is below 40% for 15 minutes then the lag tower shall be disabled. The lead position shall be rotated every month (adjustable)
3. Two new pumps shall be added to the existing sump. The BAS contractor shall check-out existing sump level controls to be sure they are all operating correctly after the sump work has been completed.

H. Interlock solids separator blow down valve with water treatment station such that on a call for bleed water the debris in the solid separator is blown down and dumped into the floor drain. Interlock the solid separator pump to operate when either condenser pump is operating.

I. The free cooling pump P-5 shall be enabled whenever the cooling tower and condenser pumps are enabled to provide condenser water to the indirect cooling coils. The speed of the pump VFD shall be determined and set by the balancing contractor.

J. Emergency kill switches shall be installed at the new doors for the chiller room. They shall become part of the existing kill switch circuit such that when any chiller room kill switch is pressed all chiller room equipment shall shut down, both new and existing.

1.7 Chiller Room Exhaust Fan

A. In normal operation the exhaust fan shall run continuously on low speed. If the refrigerant sensor furnished with the chiller sensors a refrigerant leak at a concentration above the prescribed alarm limit, or an emergency shut-down switch located by the exit doors is pressed, the fan shall transition to high speed, the chiller mechanical equipment shall be disabled, and the outside air damper shall open to provide additional ventilation to the chiller room.

1.8 Chiller Room Space temperature control

A. A DDC controller shall monitor the space temperature using a space temperature sensor. Controller shall compare the space temperature to the space temperature setpoint (75 degrees F Adjustable). When the space temperature rises above the setpoint the controller shall enable the ducted outside air fan (DOF-1) and open its associated motorized damper as the first stage of cooling. This is the first stage of cooling. The DOF system shall be locked out with the outside air temperature is above the space temperature.

B. If the space temperature continues to rise and the chilled water system is enabled the controller shall disable the DOF-1 and close its damper and then enable the cooling only fan coil unit (DFCG) for the chilled room. A DDC controller shall enable the unit fan and then modulate the chilled water coil control valve to maintain the space temperature. When the space temperature falls below the space temperature setpoint the controller shall close the valve and disable the fan.

1.9 Central Plant Hot Water System

A. BOILER STAGING

1. The system hot water setpoint shall be reset such that when the outside air temperature below 15

degrees F the hot water setpoint shall be 180 degree, when the outside air temperature is above 70 degrees the hot water setpoint shall be 120 degrees F. Between 15 and 70 degrees F outside air temperature the hot water setpoint shall reset linearly between 180 and 120 degrees F.

2. The new condensing boilers shall handle the first stages for the hot water system. The condensing boilers shall receive the hot water system setpoint from the BAS system via the BACnet communication port. The new 20% load condensing boiler shall be the first stage of heating. When it is at above 90 percent load for 10 minutes then the first 40% boiler shall be enabled as the second stage of heating. When they are above 90 percent load for 10 minutes then the second 40% load boiler shall be enabled as the third stage. The fourth stage of heating is to modulate the injection valve for the existing boilers to maintain the hot water supply temperature.
3. When the hot water supply temperature reset is above 155 degrees F or all three condensing boilers are at 100 percent load for 10 minutes then the lead existing boiler shall be enabled. The setpoint for the condensing boilers shall remain at 150 degrees max and the existing boilers shall provide the remaining heating. If the existing boiler loop supply temperature falls below 170 degrees the second boiler shall be enabled.
4. When the load on the building reduces, the boilers shall be shut-down in the reverse order that they were enabled.
5. The hot water pumps for each boiler shall be enabled and disabled with their respective boilers

B. MODULE 2 SECONDARY HOT WATER PUMP CONTROL

1. A differential pressure sensor shall be located at the in module 2 and shall monitor the pressure between the supply and return hot water pressures. A DDC controller shall compare the reading using a PID loop to the system differential pressure setpoint (10 psi adjustable). The controller shall then modulate the speed of the lead pump via a speed control signal to the pump VFD. If the lead pump stays at 60 Hz for more the 15 minutes, the lag pump shall be enabled and the pumps shall operate in parallel. When the speed of the pumps falls below 45 Hz for 15 minutes then the lag pump shall be disabled.
2. The lead pumps shall operate continuously. The lead pump position shall be rotated monthly (adjustable)

C. A DDC controller shall monitor the boiler space temperature via the room space temperature sensor. When the space temperature rises above the space temperature setpoint, the controller shall enable the cooling only fan coil unit (DFCG) for the boiler room. A DDC controller shall enable the unit fan and then modulate the chilled water coil control valve to maintain the space temperature. When the space temperature falls below the space temperature setpoint the controller shall close the valve and disable the fan.

D. A boiler room kill switch shall be located at the entrance to the boiler room. When the kill switch is pressed, all equipment in the boiler room shall be disabled. And an alarm shall be sent to the building operator via the BAS system. This kill switch shall be added to the existing kill switch circuit such pressing any switch shall shut down both existing and new equipment.

1.10 Glycol Preheat System

A. Each glycol heat exchanger shall be interlocked with its respective glycol heating pump so that the control valve cannot open unless there is flow through the heat exchanger.

B. When the outside air temperature falls below 35 degrees F (adjustable) the lead glycol hot water pump shall be enabled. If the lead pump fails to start, the lag pump shall be enabled and an alarm shall be sent via the BAS system to the building operator.

C. A pressure transducer shall monitor the differential pressure as measured between the supply and return lines. A DDC controller shall compare differential pressure to the differential pressure setpoint using a PID control loop. The controller shall use the output of the loop to modulate the speed of the hot water pump through its VFD to maintain the system static pressure setpoint.

D. When the glycol hot water system is enabled a DDC controller shall monitor the GHW supply temperature using the supply temperature sensor. The controller shall compare the supply temperature to the supply temperature setpoint (140 Degs F Adjustable) using a PID control loop. The controller shall use the output from the control loop to modulate the control valves for the glycol hot water heat exchangers that are enabled.

1.11 Domestic and Industrial Water Storage Tanks and Boilers

A. The recirculation pumps for the domestic and industrial water systems shall operate continuously. The BAS system shall monitor the status of each pump. If the pump fails an alarm shall be sent to the building operator via the BAS system.

B. A DDC controller shall monitor the hot water heaters via a BACnet interface to their controllers. Alarms from the units shall be sent via the BAS system via email to the building operator.

1.12 VAV Cooling only Boxes Located in Penthouse

A. When the space temperature is equal to or greater than the cooling temperature set point the VAV box processor shall enter the cooling mode. The controller shall reset the CFM setpoint from the minimum ventilation set point to the cooling maximum set point. The controller shall then modulate the volume of air between the minimum and maximum cooling CFM's to maintain the occupied cooling setpoint. The cooling volume shall be a function of the cooling calculation percentage to minimize the amount of cooling required to meet zone cooling demand.

1.13 Communication room and Electrical room fan coil units

A. A DDC controller shall monitor the space temperature. When the space temperature rises above the back-up cooling setpoint, the controller shall enable the fan and modulate the units chilled water valve to maintain the space back-up cooling setpoint. The controller shall send a signal to the air cooled glycol chiller requesting chilled water.

1.14 Exhaust Fans

A. The building exhaust fans shall be enabled/disable according to the building occupancy schedule. The BAS system shall monitor the status of the exhaust fans

1.15 General Lab Sequence

A. The Make-up air control valves shall totalize the total room exhaust volume from the hood exhaust valves, snorkels, and unit valves.

B. The make-up air valves shall maintain a constant adjustable room offset between the room's total exhaust and make-up air volumes. This offset shall be independent of the exhaust volume magnitude and represent the volume of air that will enter the room from the corridor, other sources.

C. The make-up air valve shall monitor the space temperature control loop for the required make-up air volume to condition the room. The make-up air setpoint command signal shall be generated by comparing the cooling demand calculation to the total hood make-up air signal and selecting the higher of these two setpoints. The general exhaust valve shall increase its CFM under conditions where additional exhaust is required to maintain the room's airflow difference between the make-up air volume and total hood exhaust volume minus the required room offset. Should the total hood exhaust volume increase during the temperature control override mode, the general exhaust valve shall decrease its CFM command accordingly. The space temperature control loop shall monitor the supply CFM and space temperature and control the reheat coil make-up air valve position and the temperature override air quantity to maintain the space temperature.

D. In the lab unoccupied mode, as determined by a lighting interlock (not fume hood standby mode) or room occupancy sensor, the total air change rate shall be decreased to 4 air changes per hour to be overridden on call for cooling or make up air.

E. The Demand Control Ventilation system shall monitor the selected lab spaces for CO_2, VOCs, and particulates. If any of these levels exceed the space setpoints for ventilation the air change rate for the space shall be increased to 12ACH and remain there until all monitored levels return to the normal operating levels. Once all monitored levels are back to normal the ACH for the space shall return to the level designated for that space. An alarm shall be sent to the building operator that a purge cycle has occurred and at which location the event occurred.

1.16 Pressurization Sequence

A. As the static pressure in the exhaust and supply duct systems fluctuate, the pressure independent cone/spring assembly of each Phoenix venture valve shall modulate to maintain the setpoint flow within 1 second.

B. The Zone Balance control function is responsible for summing the feedback of all the supply and exhaust valves, factoring in the desired offset value and commanding the valves under control to flow set points that satisfy the simplified equation: (total supply)= (total exhaust – offset). Beyond the desired ventilation rates and offset, Zone Balance Control may also be influenced by thermal override and occupancy status in order to keep the space comfortable and in balance. Emergency modes override zone balance to drive the valves to predetermined flow set points (i.e. supply fan failure) regardless of zone balance and/or temperature demands.

C. The supply valve flow command shall be generated by comparing the minimum ventilation demand, the make-up air for the hood demand, and the thermal demands signals and selecting the highest of these three settings.

1.17 Snorkel/bench hoods

A. A wall switch or switch on the unit shall provide two-position control of the snorkel, bench hood, or BSC exhaust valve. With the switch in the maximum flow position, the switch shall open the valve to its maximum flow setting. In the minimum flow position, the switch shall close the valve to its minimum flow setting. The snorkel, bench hood, or BSC exhaust valve shall transmit the CFM flow to the valve to the make-up air valves.

1.18 Fume hood Laboratory Sequence

A. As each fume hood sash opening increases or decreases, the sash sensor signal to the related fume hood monitor shall change proportionally. (a sash sensor and monitor are mounted on each fume hood).

B. With an operator at the fume hood, each Zone Presence Sensor (also mounted on the fume hood) shall detect the operator and shall send a user status signal to its associated fume hood monitor. Based on the combination of user status and sash position inputs, the fume hood monitor controls its associated hood exhaust valve, thus maintaining a constant average face velocity at the fume hood opening. During standard operation, each fume hood shall operate as a conventional variable air volume hood with a conventional face velocity of 100 fpm.

B. When the operator walks away from the fume hood and out of the ZPS detection zone, each ZPS shall detect the absence of the operator and shall switch the monitor to its standby operation mode. Based on the combination of user status and sash position inputs, the fume hood monitor shall initiate standby mode. During standby operation each fume hood shall operate with a lower, yet safe, face velocity (i.e. 60fpm). The switch form standby to operator mode face velocity shall occur in less than 1 second.

C. Each hood exhaust valve shall generate a digital feedback signal, equal to the valves airflow in CFM, and shall send this signal to the zone control module via the room-level network.

D. Each canopy exhaust valve shall generate a CFM flow feedback signal, proportional to the valve's airflow in CFM, and shall send this signal to the MAV supply valve.

E. When the differential static pressure across each exhaust valve drops below the valve's minimum operating differential static pressure, the differential pressure switch (mounted on each hood exhaust valve) shall open causing its associated fume hood monitor to generate an audible and visual flow alarm, indicating that the valve is outside of its control range. Upon a valve jam condition (i.e. feedback signal does not equal command signal) the fume hood monitor shall also generate a flow alarm. A mute button shall silence the audible portion of the alarm. When system conditions return to normal, all alarms shall automatically clear.

G. When the fume hood is not to be used for an extended period of time it will have a decommissioned mode. The operator will close the sash completely and then press the appropriate key sequence on the fume hood monitor. When the keys have been pushed and the sash is completely close the valve will

move to its minimum flow position for a standard valve or completely shut if it is a shut-off valve. The valve will stay in this position until the sash is moved. When the sash is move the valve will return to is 100 fps setting within 1 second of the sash movement.

1.19 Supply/Exhaust Tracking Zones

A. The stand-by/occupied mode of each zone shall be determined by a lighting interlock, room occupancy sensor, or the building occupancy schedule in the BAS. In the occupied mode, the supply valves shall control to the occupied minimum ventilation setting in the dead band and heating modes. Local controllers measuring the supply duct volumes shall modulate the valve to maintain the minimum ventilation setpoints. The controller shall measure the exhaust flow rates and modulate the exhaust valves to maintain a programmed differential between the supply and exhaust. If the space temperature is below the heating setpoint the controller shall modulate the reheat coil valve. On an increase in temperature above the cooling setpoint the controller shall modulate the supply valves subject to maximum volume setting to maintain the space temperature cooling setpoint. The exhaust valves shall track the supply to maintain the pre-programmed differential flow rate.

B. Some offices have radiant ceiling heating panels. The phoenix room controller shall stage the radiant panels on as needed to maintain the room temperature setpoint

C. In the stand-by mode, the stand-by minimum ventilation setpoints shall be 30% for zones where they are not an engineered contributor of makeup air to other areas.

D. CO_2 sensors shall be located in all high occupancy zones including lecture hall, conference rooms and classrooms. The ventilation to these spaces shall be increased when the CO2 increases above 800ppm.

E. Each canopy exhaust valve shall generate a CFM flow feedback signal, proportional to the valve's airflow in CFM, and shall send this signal to the MAV supply valve.

E. When the differential static pressure across each phoenix valve drops below the valve's minimum operating differential static pressure, the differential pressure switch shall open. The BAS system shall monitor pressure switch and shall initiate an alarm to the building operator when the pressure switch opens. When system conditions return to normal, all alarms shall automatically clear.

1.20 Cadaver Laboratory Sequences of Operation

A. The cadaver area laboratories shall maintain a minimum 15 air changes per hour (ACH). Each cadaver bed shall have a modulating exhaust air flow control valve. The total exhaust flow through the beds shall provide the 15 ACH. The room controller shall balance the supply air flow and the exhaust air flow to maintain 15 ACH. The exhaust flow shall be balanced between the cadaver beds. Any beds that are not in use shall be modulated to maintain the proper ACH rate and the room offset flow setpoint. The exhaust valve for each bed shall be interlocked with the bed lights so that when a body is placed on the bed and the lights turned on the valve shall position to the bed in use exhaust flow setpoint. The rest of the unoccupied beds shall decrease the minimum flow setpoint to maintain 15 ACH in the room. When the cadaver is removed from the bed and the lights turned off then the valve shall return to it unoccupied setpoint and can be used to assist in maintaining the ACH rate and the room offset flow setpoint.

B. If the space temperature rises above the space temperature setpoint the controller shall increase the amount of supply air entering the lab area. The total exhaust through the cadaver bed valves shall increase by the same amount to maintain the room offset flow setpoint. As the room temperature returns to setpoint the supply and exhaust airflow shall return to the 15 ACH level and maintain the room offset flow setpoint.

1.21 Water Meters

A. A remote monitoring module shall be provided with the water meter for the building. The BAS system shall monitor total indoor water consumption.
B. BTU meters shall be provided on both new and existing water loops

1.22 Gas Meters

A. A remote monitoring module shall be provided with the natural gas meter for the building. The BAS system shall monitor total indoor natural gas consumption. Additionally a gas meter shall be installed to monitor the gas flow for each of the new boilers and new water heaters. Gas meters shall also be installed for the existing plant boilers.

1.23 Power Meters

A. Power meters shall be provided by Division 26 as shown on the plans. Each meter shall require a graphic that includes total energy consumption, current (instant) energy consumption rate, peak energy and energy trending and be monitored by the BAS system. Meters shall monitor the lighting, HVAC, and plug load electrical panels.

B. All fan and pump motors that are not equipped with a VFD shall have an current transducer to monitor the current draw of the motors for both status and power monitoring.

1.24 Emergency Generator

A. Provide an alarm status off of the emergency generator to indicate generator operation as well as status of transfer switch and emergency generator alarm conditions.

1.25 Unit Heaters

A. A ~~thermostat~~ DDC controller shall cycle the fan and hot water valve to maintain space temperature setpoint. A space sensor provides for remote monitoring and alarm of low temperature conditions.

1.26 Grinding Rooms on 3rd Floor

A. A switch shall be provided by the ATC contractor to enable the dust collector for each space. When the switch in enabled the dust collector shall be started, the supply valve for the space shall go to its maximum flow setpoint and the general exhaust valve shall go to its minimum flow setpoint to maintain the negative room air pressurization. When the switch is disabled, the supply and general exhaust valves shall return to normal zone tracking control to maintain the space offset.

1.27 Sally Port

A. The Supply Phoenix valve and the exhaust fan shall operate as a tracking pair to maintain the sally port at a negative pressure in relation to the building. A flow sensor shall be installed in the exhaust duct and the ECM motor on the fan shall be modulated to maintain the exhaust flow setpoint. The controller shall also monitor a CO sensor. As the CO level rises the exhaust fan flow setpoint shall increase. If the CO level reaches an alarm level the exhaust fan shall go to full speed and the supply valve shall be at its flow associated flow setpoint. An alarm shall be sent via the BAS system to the building operator

1.28 Airflow Over-ride switches

A. At the locations shown on the drawings the ATC contractor shall provide an airflow over-ride switch. The switch shall be labeled as “Emergency Air Flow Over-ride”. When pressed the supply valve for the room shall go to its maximum flow setpoint and the general exhaust valve shall position to the appropriate setpoint to maintain the room offset value. The valves shall stay in this position until the switch is returned to its normal position. An alarm shall be sent to the building operator that the switch has been activated.

1.29 Tissue Recovery Room

A. A room occupancy switch shall be provided by the ATC contractor. The supply valve for the space shall monitor the room occupancy switch. When the room is occupied the air change rate shall be controlled to 20 ACH, when the room is unoccupied the air change rate shall be controlled to 6 ACH.

1.30 Acid Hood Exhaust Fan

A. The acid hood exhaust fan shall operate continuously. The BAS shall monitor the status of the fan and shall alarm the building operator if the fan stops via the BAS system.

1.31 Gun Range

A. A wall switch located next to the entrance to the PTR room will switch the room and range between occupied and unoccupied modes of operation. In the Occupied mode the system shall be enabled and shall operate at the design air change rate and flow. When the system in unoccupied the air flow rate shall be at the unoccupied rate. The phoenix control valve shall modulate the hot water coil valve to maintain the room space temperature.

1.32 Body Freezers and Coolers

A. The BAS system shall monitor the temperatures in the body Freezers and coolers. If the temperature rises above the alarm setpoint the BAS system shall send an alarm to the building operator

1.33 High Purity Gas System

A. The BAS contractor shall provide the low voltage wiring between the room high purity gas panel and the manifold panel. The BAS system shall monitor the manifold panel for fault and low gas level alarms. Alarms shall be sent to the building operator.

1.34 Elevator Equipment Room

A. The BAS contractor shall provide the low voltage wiring between the elevator room split systems. The BAS system shall monitor the space temperature of the rooms and send an alarm to the building operator if the temperature rises above the alarm setpoint.

1.35 Emergency Power Mode of Operation

A. On a loss of normal power and the enabling of the back-up power generator the BAS system shall place all zone into the unoccupied mode. All over-ride switches shall continue to operate as normal when activated.

B. The BAS contractor and balancing contractor shall determine the speed at which the supply and exhaust fans operate when the system is in the fully unoccupied mode. The BAS system shall set the speed of the supply and exhaust systems to this value on the loss of power for 30 seconds then allow the system to operate in the auto mode and maintain the duct static pressure setpoints.

C. The equipment shall be staged on in the following order after the loss of power and the starting of the generator:

- Supply and Exhaust AHUs
- Hot Water systems
- Remaining equipment that is on emergency power

PART 2.0 POINTS LIST

	Input / Output						Graphics					Other		
	Digital Input	Digital Output	Analog Input	Analog Output	Hardwire Interlock	Open Protocol Integration	Dynamic Flow Diagrams	Start/Stop	Display Status	Display Value	Adjust Value	Alarm Local	Alarm Email	Trend
AIR HANDLER AH-1														
Supply Fan VFD (Points per VFD)						X	X	X	X	X				
Supply Fan Start/Stop		X				X		X						

	Input / Output						Graphics					Other		
	Digital Input	Digital Output	Analog Input	Analog Output	Hardwire Interlock	Open Protocol Integration	Dynamic Flow Diagrams	Start/Stop	Display Status	Display Value	Adjust Value	Alarm Local	Alarm Email	Trend
Supply Fan Status	X					X			X			X	X	
Supply Fan VFD Speed Signal				X		X	X			X	X			X
Supply Air Static Pressure			X				X			X	X	X		
Low Temp Detector (Freeze Stat)	X				X		X		X	X		X	X	X
Pressure Relief Door	X					X	X		X			X	X	
Pre-Filter Differential Pressure			X				X			X		X	X	
Final Filter Differential Pressure			X				X			X		X	X	
High Static Pressure Switch	X				X	X	X		X	X		X	X	
Outside Air Damper	X	X				X						X		
Discharge Isolation Damper	X	X				X						X		
Supply Air Temperature			X				X			X		X		X
Pre-Heat Coil Discharge Air Temperature			X				X			X		X		X
Heat Recovery Coil Discharge Air Temperature			X				X			X		X		X
Cooling Coil Valve				X			X		X	X	X			X
Indirect Cooling Coil Valve				X			X		X	X	X			X
Pre-Heat Coil Valve									X	X	X			X
Heat Recovery Coil Valve				X			X		X	X				X
Heating Coil Valve				X			X		X	X	X			X
Cooling Coil Discharge Air Temperature			X				X			X		X		X
Indirect Cooling Coil Discharge Air Temperature			X				X			X		X		X
Heating Coil Discharge Air Temperature			X				X			X		X		X
Evap Media Discharge Air Temperature			X				X			X		X		X
Evap Media Pump	X	X					X	X	X					
Evap Sump Drain		X					X	X						
Evap Sump Fill		X					X	X						
Evap Sump Flush		X					X	X						
Evap Bypass Damper			X				X			X	X			X
Supply Fan Run Time					X		X			X				
Supply Fan Calculated KWH										X				
Supply Fan Calculated kW										X				

	Input / Output						Graphics					Other		
	Digital Input	Digital Output	Analog Input	Analog Output	Hardwire Interlock	Open Protocol Integration	Dynamic Flow Diagrams	Start/Stop	Display Status	Display Value	Adjust Value	Alarm Local	Alarm Email	Trend
Discharge Humidity			X							X				X
Outside Air Wet Bulb Temperature			X							X				X
Outside Air Flow			X							X				X
Cooling load PID Showing stages of cooling							X			X				
Heating Load PID showing stages of heating							X			X				
Hoar Frost Coil Valve Differential Pressure			X				X			X				X
Hoar Frost Coil Valve Signal			X						X					
AIR HANDLER AH-2														
Supply Fan VFD (Points per VFD)							X	X	X	X				
Supply Fan Start/Stop		X				X		X						
Supply Fan Status	X					X			X			X	X	
Supply Fan VFD Speed Signal				X		X	X			X	X			
Supply Air Static Pressure			X				X			X	X	X		X
Low Temp Detector (Freeze Stat)	X				X		X		X	X		X	X	
Pressure relief door status	X					X	X		X			X	X	
Pre-Filter Differential Pressure			X				X			X		X	X	
Final Filter Differential Pressure			X				X			X		X	X	
High Static Pressure Switch	X				X	X	X		X	X		X	X	
Outside Air Damper	X	X				X						X		X
Discharge Isolation Damper	X	X				X						X		
Supply Air Temperature			X				X			X		X		X
Pre-Heat Coil Discharge Air Temperature			X				X			X		X		X
Heat Recovery Coil Discharge Air Temperature			X				X			X		X		X
Cooling Coil Valve				X			X		X	X	X			X
Indirect Cooling Coil Valve				X			X		X	X	X			X
Pre-Heat Coil Valve				X			X		X	X	X			X
Heat Recovery Coil Valve				X			X		X	X	X			X
Heating Coil Valve				X			X		X	X	X			X
Cooling Coil Discharge Air Temperature			X				X			X		X		X

	Input / Output						Graphics					Other		
	Digital Input	Digital Output	Analog Input	Analog Output	Hardwire Interlock	Open Protocol Integration	Dynamic Flow Diagrams	Start/Stop	Display Status	Display Value	Adjust Value	Alarm Local	Alarm Email	Trend
Indirect Cooling Coil Discharge Air Temperature			X				X			X		X		X
Heating Coil Discharge Air Temperature			X				X			X		X		X
Evap Media Discharge Air Temperature			X				X			X		X		X
Evap Media Pump	X	X					X	X	X					
Evap Sump Drain		X					X	X						
Evap Sump Fill		X					X	X						
Evap Sump Flush		X					X	X						
Supply Fan Run Time					X		X			X				
Supply Fan Calculated KWH										X				
Supply Fan Calculated kW										X				
Discharge Humidity			X							X				X
Outside Air Wet Bulb Temperature			X							X				X
Outside Air Flow			X							X				X
Cooling load PID Showing stages of cooling							X			X				
Heating Load PID showing stages of heating							X			X				
Hoar Frost Coil DP			X				X			X				X
Hoar Frost Valve Signal		X					X		X					
Exhaust Air Handler AH-3														
Exhaust Fan VFD (Points per VFD)							X	X	X	X				
Fan Start/Stop (typical of 2)		X				X								
Fan Status (typical of 2)	X					X						X		
Fan Signal (typical of 2)				X			X		X					X
Fan Inlet High Static Pressure Switch (typical of 2)	X				X	X						X	X	
Exhaust Air Pre-filter Differential Pressure			X				X			X		X		
Reclaim Coil Valve				X			X		X					X
Reclaim Coil Discharge Air Temp			X				X			X		X		X
Exhaust Duct Static Pressure			X				X			X		X	X	X
Exhaust Air Isolation Damper		X			X		X		X					
Exhaust Air Bypass Damper				X			X		X	X	X			X

	Input / Output						Graphics					Other		
	Digital Input	Digital Output	Analog Input	Analog Output	Hardwire Interlock	Open Protocol Integration	Dynamic Flow Diagrams	Start/Stop	Display Status	Display Value	Adjust Value	Alarm Local	Alarm Email	Trend
Stack Differential Pressure (typical of 2)			X				X			X	X			X
Exhaust Air Temperature			X				X	X	X	X		X		X
Fan Runtime						X			X					
Exhaust Air Flow			X							X				X
Exhaust Air Handler AH-4														
Exhaust Fan VFD (Points per VFD)						X	X	X	X	X				
Fan Start/Stop (typical of 2)		X				X								
Fan Status (typical of 2)	X					X						X		
Fan Signal (typical of 2)				X			X		X					X
Fan Inlet High Static Pressure Switch (typical of 2)	X				X	X						X	X	
Exhaust Air Pre-filter Differential Pressure			X				X			X		X		
Reclaim Coil Valve				X			X		X					X
Reclaim Coil Discharge Air Temp			X				X			X		X		X
Exhaust Duct Static Pressure			X				X			X		X	X	X
Exhaust Air Isolation Damper		X			X		X		X					
Exhaust Air Bypass Damper				X			X		X	X	X			X
Stack Differential Pressure (typical of 2)			X				X			X	X			X
Exhaust Air Temperature			X				X	X	X	X		X		X
Fan Run Time						X				X				
Exhaust Air Flow			X							X				X
Domestic/Industrial Hot Water Systems														
Pump Enable (typical of 2)		X						X			X			
Pump Current Transducer (typical of 2)			X						X					
Pump Runtime										X				
Calculated kWH for CT										X				
DHW Heater enable		X			X		X	X						
DHW Heater Fault	X				X				X			X		
DHW Heater Additional Point via Manufacturer						X	X		X	X	X			X
DHW Supply Temperature Setpoint									X					
IHW Heater enable		X			X		X	X	X					

	Input / Output						Graphics					Other		
	Digital Input	Digital Output	Analog Input	Analog Output	Hardwire Interlock	Open Protocol Integration	Dynamic Flow Diagrams	Start/Stop	Display Status	Display Value	Adjust Value	Alarm Local	Alarm Email	Trend
IHW Heater Fault	X				X				X			X		
IHW Heater Additional Point via Manufacturer	X		X		X		X		X	X	X			X
IHW Supply Temperature Setpoint									X					
DHW Return Water Temperature			X						X					X
DHW Supply Water Temperature			X						X					X
IHW Return Water Temperature			X						X					X
IHW Supply Water Temperature			X						X					X
Water Meter for Kitchen System			X						X					X
Water Meter for Domestic HW System			X						X					X
Building Reheat System														
Pump VFD (Points per VFD)						X	X	X	X	X				
Reheat Pumps Stop/Start		X					X							
Reheat Pumps Status	X						X					X	X	
VFD Signal				X			X		X	X				X
Hot Water Differential Pressure			X				X			X	X			X
Reheat Pump Run times										X				
Reheat Pump calculated KWH										X				
Hot Water Valve				X			X			X				X
Supply Water Temperature			X				X			X	X	X	X	X
Return Water Temperature			X				X			X				X
GLYCOL HOT WATER LOOP														
Glycol Supply Temperature (typical of 2)			X				X			X	X			
Glycol Return Temperature			X				X			X	X			
Control Valve (typical of 2)				X			X			X				
Pump VFDs (Points per VFD)						X								
Pump Stop/Start (typical of 2)		X					X	X						
Glycol HW Loop Differential Pressure			X							X				X

	Input / Output						Graphics					Other		
	Digital Input	Digital Output	Analog Input	Analog Output	Hardwire Interlock	Open Protocol Integration	Dynamic Flow Diagrams	Start/Stop	Display Status	Display Value	Adjust Value	Alarm Local	Alarm Email	Trend
Pump VFD Signal				X			X			X	X			X
Pump calculated kWH										X				
Low Glycol Tank Alarm	X													X
BOILER HOT WATER LOOP														
Boiler Enable (typical of 3)		X				X	X	X	X		X			X
Boiler Status (typical of 3)	X					X	X	X	X			X	X	
Boiler Alarm (typical of 3)	X					X	X	X	X			X	X	
Supply Water Temperature			X				X			X	X	X	X	
Return Water Temperature			X				X			X				x
Boiler Pump Enables (typical of 3)		X					X	X	X					
Boiler Pump Current Transducer (typical of 3)			X				X		X			X	X	
Emergency Shutdown Switch (each door)	X											X	X	
Pump Calculated KWH										X				
Supply Temperature each boiler		X								X				X
Chilled Water System														
Mod 2 CHW Pumps Enable (typical of 2)		X					X	X			X	X		
Mod 2 CHW Pumps Status (typical of 2)	X						X		X	X		X	X	X
Mod 2 CHW Pumps Speed signal				X			X		X	X	X			
Mod 2 CHW Differential Pressure			X				X		X	X	X	X		
Plant Chilled Water Supply Temp			X				X		X	X		X	X	
Plant Chilled Water Return Temp			X				X		X	X				
Mod 2 Chilled Water Supply Temp			X				X		X	X		X	X	
Mod 2 Chilled Water Return Temp			X				X		X	X				
Mod 2 Indirect CHW Supply Temp			X				X		X	X		X	X	
Mod 2 Indirect CHW Return Temp			X				X		X	X				
Mod 2 Indirect CHW HX Control Valve				X			X		X	X	X	X		
Mod 2 Indirect CHW Pump Enable		X					X	X			X	X		
Mod 2 Indirect CHW Pump Current Transducer			X				X		X	X		X	X	X

	Input / Output						Graphics					Other		
	Digital Input	Digital Output	Analog Input	Analog Output	Hardwire Interlock	Open Protocol Integration	Dynamic Flow Diagrams	Start/Stop	Display Status	Display Value	Adjust Value	Alarm Local	Alarm Email	Trend
CH-1 Enable		X				X	X	X	X					
CH-1 Status	X					X	X		X					
CH-1 Fault						X	X		X			X	X	
CH-1 CHWS Supply Temp SP				X		X	X		X	X				
CH-1 (Additional Points as per Manufacturer)						X	X		X	X	X			
CH-2 Enable		X				X	X	X	X					
CH-2 Status	X					X	X		X					
CH-2 Fault						X	X		X			X	X	
CH-2 CHWS Supply Temp SP				X		X	X		X	X				
CH-2 (Additional Points as per Manufacturer)						X	X		X	X	X			
Chiller CHW Pumps Enable (typical of 2)		X					X	X			X	X		
Chiller CHW Pump Current Transducer (typical of 2)			X				X		X	X		X	X	X
Chiller CW Pumps Enable (typical of 2)		X					X	X			X	X		
Chiller CW Pumps Current Transducer (typical of 2)			X				X		X	X		X	X	X
Sump Pumps Enable (typical of 2)		X					X	X			X	X		
Sump Pumps Current Transducer (typical of 2)			X				X		X	X		X	X	X
Tower Discharge Temperature (typical of 2)				X			X			X				
Tower Fan Enable (typical of 2)		X				X	X	X	X					
Tower Fan Status (typical of 2)	X					X	X		X			X		
Tower Fan VFD Speed Signal (typical of 2)				X		X	X		X	X		X		
Tower Drain Valves (typical of 2)		X					X		X	X				
Tower Sump Temperatures			X				X		X	X				
Comm Rm Fan Coil Unit Chilled Water System														
Air Cooled Chiller Start/Stop		X				X	X	X	X	X				
Air Cooled Chiller Status	X					X	X		X	X				
Air Cooled Chiller Fault	X					X	X		X			X	X	
Additional Points as available from manufacturer						X	X		X	X	X			
Chiller Loop Pump Start/Stop		X					X	X			X	X		
Chiller Loop Pump Current Transducer			X				X		X	X		X	X	X

	Input / Output						Graphics					Other		
	Digital Input	Digital Output	Analog Input	Analog Output	Hardwire Interlock	Open Protocol Integration	Dynamic Flow Diagrams	Start/Stop	Display Status	Display Value	Adjust Value	Alarm Local	Alarm Email	Trend
Fan Coil Loop Pump Start/Stop		X					X	X			X	X		
Fan Coil Loop Pump current Transducer			X				X		X	X		X	X	X
HX Primary Side Supply Temp			X				X		X	X		X	X	
HX Primary Side Return Temp			X				X		X	X				
HX Secondary Side Supply Temp			X				X		X	X		X	X	
HX Secondary Side Return Temp			X				X		X	X				
Automatic Transfer Switches & Em. Generator														
Switch Status	X					X			X					
Additional points determined by ATS manufacturer						X			X					
Em Generator Alarm and Status contacts						X			X					
Additional points determined by Generator manufacturer						X			X					
FAN COIL UNITS (Chilled Water)														
Space temperature			X				X		X			X	X	
Supply air temperature			X				X		X					
Chilled Water Valve				X			X		X					
Fan Motor Current Sensor			X				X		X					
Filter differential pressure			X							X		X		X
All VFD's (as available in VFD)														
Start/Stop		X				X								
Status	X					X								X
System Fault						X						X		
Speed				X		X				X				
Frequency Output				X		X				X				
Percent Output				X		X				X				
Current			X			X				X				
Torque			X			X				X				
Power			X			X				X				

	Input / Output						Graphics					Other		
	Digital Input	Digital Output	Analog Input	Analog Output	Hardwire Interlock	Open Protocol Integration	Dynamic Flow Diagrams	Start/Stop	Display Status	Display Value	Adjust Value	Alarm Local	Alarm Email	Trend
Drive Temperature			X			X				X				
KWH			X			X				X				
Runtime			X			X				X				X
DC Bus Volts			X			X				X				
PID Feedback			X			X								
Fault 1	X					X						X	X	
Fault 2	X					X						X	X	
Venturi VAV Tracking Pairs Controls														
Space Temperature Sensor Input			X			X	X					X		
Occupied Temperature SetPoint Input			X			X	X							
Occupancy Override Input	X					X	X							
Occupancy Sensor Input	X					X								
Application Mode Command Input														
Unoccupied Cooling Temperature Setpoint						X								
Unoccupied Heating Temperature Setpoint						X								
Discharge Air Temperature Input			X			X								
Terminal Load Output						X								
BMS HVAC Emergency Override Input	X					X								
Zone Total Supply Flow Output			X			X	X							
Zone Total Exhaust Flow Output			X			X	X							
Zone Volumetric Offset Feedback Output			X			X	X							
Supply Valve Flow Feedback Output			X			X	X							
Exhaust Valve Flow Feedback Output			X			X	X							
Reheat Valve						X	X							
Calculated Positive Room Alarm													X	
Differential pressure drop across the Valve			X			X				X				
Fume Hood Labs														
Space Temperature Sensor Input			X			X	X			X		X		
Occupied Temperature SetPoint Input			X			X	X			X		X		
Unoccupied Cooling Temperature Setpoint						X				X		X		

	Input / Output						Graphics					Other		
	Digital Input	Digital Output	Analog Input	Analog Output	Hardwire Interlock	Open Protocol Integration	Dynamic Flow Diagrams	Start/Stop	Display Status	Display Value	Adjust Value	Alarm Local	Alarm Email	Trend
Unoccupied Heating Temperature Setpoint						X				X		X		
Discharge Air Temperature Input			X			X				X		X		
Terminal Load Output						X				X		X		
BMS HVAC Emergency Override Input	X					X							X	
Zone Total Supply Flow Output			X			X	X			X		X		
Zone Total Exhaust Flow Output			X			X	X			X		X		
Supply Valve Flow Feedback Output			X			X	X			X		X		
Exhaust Valve Flow Feedback Output			X			X	X			X		X		
Reheat Valve						X	X			X		X		
Flow Alarm						X						X	X	
Hood Override						X								
Sash Height Alarm						X								
Face Velocity						X				X		X		
Sash Open Percent						X				X		X		
User Status State						X						X		
Bypass Time Remain						X				X		X		
Effective Emergency Mode						X								
Emergency Mode Command						X								
Total Zone Supply										X		X		
Total Zone Exhaust														
Differential pressure drop across the Valve			X			X				X				
BTU Metering														
Existing Bldg CHW Lines BTU Meter			X				X		X	X				
Existing Bldg HW Lines BTU Meter			X				X		X	X				
Mod 2 CHW Lines BTU Meter			X				X		X	X				
Mod 2 HW Lines BTU Meter			X				X		X	X				
Gallons per minute						X				X				X
Supply water temperature						X				X				X
Return water temperature						X				X				X
Instantaneous BTU						X				X				X

	Input / Output						Graphics					Other		
	Digital Input	Digital Output	Analog Input	Analog Output	Hardwire Interlock	Open Protocol Integration	Dynamic Flow Diagrams	Start/Stop	Display Status	Display Value	Adjust Value	Alarm Local	Alarm Email	Trend
Cumulative BTU						X				X				X
Heat Recovery Pumps														
Pump Start/Stop (typical of 2)		X					X	X						
Pump Current Tranducers (typical of 2)			X				X		X			X		
Exhaust Fans														
Fan Start/Stop		X					X	X						
Fan Current Transducer			X				X		X			X		
Calculated KWH										X				
Sump Pumps														
Pump Start/Stop		X				X	X							
Pump Current Tranducers (typical of 2)			X				X		X					
High Level	X						X					X	X	
Power Consumption														
Electrical Power Meters (supplied by 260000)						X				x				X
KW						X				X				X
PF						X				X				X
KWH						X				X				X
Volt						X				X				X
Amperage						X				X				X
Total Harmonic Distortion (main Meter only)						X				X				X
Compressor & Vacuum Pumps														
Alarm	X						X		X					
Pump Status	X						X		X					
Pump Pressure			X				X			X		X	X	
Water Meters														
Existing Building Water Meter			X				X			X	X			
Mod 2 Building Water Meter			X				X			X	X			

	Input / Output						Graphics					Other		
	Digital Input	Digital Output	Analog Input	Analog Output	Hardwire Interlock	Open Protocol Integration	Dynamic Flow Diagrams	Start/Stop	Display Status	Display Value	Adjust Value	Alarm Local	Alarm Email	Trend
Gas Meters														
Building Meter	X						X			X				
New Boiler Meters (Each Boiler)	X						X			X				
Existing Boiler Meters (add to each boiler)														
New Water Heater Meters (Each water heater)	X						X			X				
Existing Water Heater Meters (Each water heater)	X						X			X				
Unit Heaters														
Space Temperature			X				X		X			X	X	
Space Temperature Setpoint				X			X		X	X				
Hot water valve				X										
Fan Start/Stop		X												
Sally Port														
Point per tracking pair														
Exhaust Duct Flow		X					X			X				
CO Level		X					X			X		X	X	X
Acid Hood Exhaust Fan														
Exhaust Fan Status	X						X		X			X		
Air Flow Over-ride switches														
Over-ride switch Status	X						X		X			X		
Tissue Recovery Room														
Occupancy Switch	X						X		X			X		

SECTION 232123 - HYDRONIC PUMPS

PART 1 - GENERAL

1.1 RELATED DOCUMENTS

A. Drawings and general provisions of the Contract, including General and Supplementary Conditions and Division 01 Specification Sections, apply to this Section.

1.2 SUMMARY

A. Section Includes:
1. Close-coupled, in-line centrifugal pumps.
2. Separately coupled, base-mounted, end-suction centrifugal pumps.

B. Related Sections include the following:

1. Division 23 Section "Common Motor Requirements".
2. Division 23 Section "Vibration Isolation and Seismic Restraints".
3. Division 23 Section “Hydronic Piping Specialties”.

1.3 DEFINITIONS

A. Buna-N: Nitrile rubber.

B. EPT: Ethylene propylene terpolymer.

1.4 ACTION SUBMITTALS

A. Product Data: For each type of pump. Include certified performance curves and rated capacities, shipping weights, installed weights, operating characteristics, furnished specialties, final impeller dimensions, and accessories for each type of product indicated. Indicate pump's operating point on curves.

B. Shop Drawings: For each pump.
1. Show pump layout and connections.
2. Include setting drawings with templates for installing foundation and anchor bolts and other anchorages.
3. Include diagrams for power, signal, and control wiring.
   a. Detail all wiring systems and differentiate clearly between manufacturer-installed and field-installed wiring.

1.5 CLOSEOUT SUBMITTALS

A. Operation and Maintenance Data: For pumps to include in emergency, operation, and maintenance manuals.

1.6 MAINTENANCE MATERIAL SUBMITTALS

A. Furnish extra materials described below that match products installed and that are packaged with protective covering for storage and identified with labels describing contents.

1. Mechanical Seals: One extra mechanical seal for each pump, in addition to the mechanical seal installed on each pump.

1.7 QUALITY ASSURANCE

A. UL Compliance: Fabricate and label pumps to comply with UL 778, "Motor-Operated Water Pumps," for construction requirements.

B. Product Options: Drawings indicate size, profiles, connections, and dimensional requirements of pumps and are based on the specific types and models indicated. Other manufacturers' pumps with equal performance characteristics may be considered. Refer to Division 1 Section "Substitutions."

C. Regulatory Requirements: Fabricate and test steam condensate pumps to comply with HI 1.1-1.5, "Centrifugal Pumps for Nomenclature, Definitions, Application and Operation," and HI 1.6, "Centrifugal Pump Tests."

D. Electrical Components, Devices, and Accessories: Listed and labeled as defined in NFPA 70, Article 100, by a testing agency acceptable to authorities having jurisdiction.

E. Single Source Responsibility: Obtain all HVAC pumps from a single manufacturer.

1.8 DELIVERY, STORAGE, AND HANDLING

A. Manufacturer's Preparation for Shipping: Clean flanges and exposed machined metal surfaces and treat with anticorrosion compound after assembly and testing. Protect flanges, pipe openings, and nozzles with wooden flange covers or with screwed-in plugs.

B. Store pumps in dry location.

C. Retain protective covers for flanges and protective coatings during storage.

D. Protect bearings and couplings against damage from sand, grit, and other foreign matter.

E. Comply with pump manufacturer's written rigging instructions.

1.9 COORDINATION

A. Coordinate size and location of concrete bases.

PART 2 - PRODUCTS

2.1 GENERAL PUMP REQUIREMENTS

A. Pump Units: Factory assembled and tested.

B. Motors: Include built-in, thermal-overload protection and grease-lubricated ball bearings. Select each motor to be non-overloading over full range of pump performance curve.

C. Motors shall be Premium Efficiency.

2.2 CLOSE-COUPLED, IN-LINE CENTRIFUGAL PUMPS

A. Manufacturers: Subject to compliance with requirements, provide products by one of the following:
1. Armstrong Pumps Inc.
2. Aurora Pump; Division of Pentair Pump Group.
3. Flofab
4. ITT Corporation; Bell & Gossett.
5. Patterson Pump Co.; a subsidiary of the Gorman-Rupp Co.
6. TACO Incorporated.

B. Description: Factory-assembled and -tested, centrifugal, overhung-impeller, close-coupled, in-line pump as defined in HI 1.1-1.2 and HI 1.3; designed for installation with pump and motor shafts mounted horizontally or vertically. Rated for 175-psig minimum working pressure and a continuous water temperature of 225 deg F.

C. Pump Construction:
1. Casing: Radially split, cast iron, with threaded gage tappings at inlet and outlet, and threaded or threaded companion-flange or union-end connections or unions at connections for casings that are not available with threaded companion flanges.
2. Impeller: ASTM B 584, cast bronze; statically and dynamically balanced, keyed to shaft, and secured with a locking cap screw. For constant-speed pumps, trim impeller to match specified performance.
3. Pump Shaft: Steel, with oil lubricated copper-alloy shaft sleeve.
4. Seal: Mechanical seal consisting of carbon rotating ring against a ceramic seat held by a stainless-steel spring, and Buna-N bellows and gasket. Include water slinger on shaft between motor and seal.
5. Pump Bearings:
   1. Oil lubricated, bronze-journal.

D. Motor: Single speed resiliently mounted to pump casing.
1. Electrical Components, Devices, and Accessories: Listed and labeled as defined in NFPA 70, by a qualified testing agency, and marked for intended location and application.
2. Comply with NEMA designation, temperature rating, service factor, and efficiency requirements for motors specified in Division 23 Section "Common Motor Requirements for HVAC Equipment."
   a. Enclosure: Open, dripproof.
   b. Enclosure Materials:
      1) Cast iron.
   c. Motor Bearings:
      1) Grease-lubricated ball bearings.
   d. Efficiency:
      1) Premium efficient.
   e. Service Factor: 1.15

2.3 SEPARATELY COUPLED, BASE-MOUNTED, END-SUCTION CENTRIFUGAL PUMPS

A. Manufacturers: Subject to compliance with requirements, provide products by one of the following:
1. Armstrong Pumps Inc.
2. Aurora Pump; Division of Pentair Pump Group.
3. Flofab
4. ITT Corporation; Bell & Gossett.
5. Patterson Pump Co.; a subsidiary of the Gorman-Rupp Co.
6. TACO Incorporated.

B. Description: Factory-assembled and -tested, centrifugal, overhung-impeller, separately coupled, bronze fitted, end-suction pump as defined in HI 1.1-1.2 and HI 1.3; designed for base mounting, with pump and motor shafts horizontal. Rated for 175-psig minimum working pressure and a continuous water temperature of 225 deg F.

C. Pump Construction:

1. Casing: Radially split, cast iron, bronze fitted, with threaded gage tappings at inlet and outlet, drain plug at bottom and air vent at top of volute, and flanged connections.
   a. Provide integral mount on volute to support the casing, and provide attached piping to allow removal and replacement of impeller without disconnecting piping or requiring the realignment of pump and motor shaft.
2. Impeller: ASTM B 584, cast bronze; statically and dynamically balanced, keyed to shaft, and secured with a locking cap screw. For pumps without frequency-drive control, trim impeller to match specified performance.
3. Pump Shaft: Steel, with copper-alloy shaft sleeve.
4. Seal: Mechanical seal consisting of carbon rotating ring against a ceramic seat held by a stainless-steel spring, and Buna-N bellows and gasket. Include water slinger on shaft between motor and seal.
5. Pump Bearings: Grease-lubricated ball bearings in cast-iron housing with grease fittings.

D. Shaft Coupling: Molded-rubber insert and interlocking spider capable of absorbing vibration.
1. Couplings shall be drop-out type to allow disassembly and removal without removing pump shaft or motor.
2. EPDM coupling sleeve for variable-speed applications.

E. Coupling Guard: Dual rated; ANSI B15.1, Section 8; OSHA 1910.219 approved; steel; removable; attached to mounting frame.

F. Mounting Frame: Welded-steel frame and cross members, factory fabricated from ASTM A 36/A 36M channels and angles. Fabricate to mount pump casing, coupling guard, and motor.

G. Motor: Single speed, secured to mounting frame, with adjustable alignment.
1. Electrical Components, Devices, and Accessories: Listed and labeled as defined in NFPA 70, by a qualified testing agency, and marked for intended location and application.
2. Comply with NEMA designation, temperature rating, service factor, and efficiency requirements for motors specified in Division 23 Section "Common Motor Requirements for HVAC Equipment."
   a. Enclosure: Open, dripproof.
   b. Enclosure Materials: Cast iron.
   c. Motor Bearings: Grease-lubricated ball bearings.
   d. Efficiency: Premium efficient.
   e. Service Factor: 1.15

2.4 VERTICAL TURBINE

A. Description: Factory-assembled and -tested,[multistage], centrifugal, impeller-between-bearings, end-suction pump; designed for installation with pump and motor shafts mounted vertically and projecting into a sump. Rate pump for [175-psig (1204-kPa)] minimum working pressure and a continuous water temperature of 200 deg F (93 deg C).

B. Pump Construction:

1. Pump Bowl: Cast iron, with replaceable bronze wear ring, basket strainer, and suction bell. Water passages of intermediate bowls shall be coated with porcelain enamel.
2. Impeller: ASTM B 584, cast bronze; statically and dynamically balanced, and keyed to shaft. Trim impeller to match specified performance.
3. Pump Shaft: [Stainless] steel sized per AWWA E-101.
4. Pump Bearings: Water-lubricated bronze and rubber sleeve bearings contained in cast-iron housing.
5. Pump Column: ASTM A 53/A 53M, Grade B steel pipe.
6. Mechanical Seal: Carbon rotating ring against a ceramic seat held by a stainless-steel spring, and Buna-N bellows and gasket. Seal shall be replaceable without removing the motor or disturbing the piping.

C. Shaft Coupling: Keyed with locking collets.

D. Discharge Head: ASME B16.1, Class [125] [250] discharge flange with threaded gage tapping. Top of discharge head shall have a registered fit to accurately locate the driver.

E. Drive Ratchet: Non-reversing ratchet.

2.5 DOMESTIC WATER PUMPS

A. See Division 22 Section “Domestic Water Pumps”.

2.6 PUMP SPECIALTY FITTINGS

A. Suction Diffuser:
1. Angle pattern.
2. 175-psig pressure rating, cast-iron body and end cap, pump-inlet fitting.
3. Bronze startup and bronze or stainless-steel permanent strainers.
4. Bronze or stainless-steel straightening vanes.
5. Drain plug.
6. Factory-or field-fabricated support.

B. Triple-Duty Valve: Not Allowed.

PART 3 - EXECUTION

3.1 EXAMINATION

A. Examine equipment foundations and anchor-bolt locations for compliance with requirements for installation tolerances and other conditions affecting performance of the Work.

B. Examine roughing-in for piping systems to verify actual locations of piping connections before pump installation.

C. Examine foundations and inertia bases for suitable conditions where pumps are to be installed.

D. Proceed with installation only after unsatisfactory conditions have been corrected.

3.2 PUMP INSTALLATION

A. Install pumps according to HI 1.1-1.5, "Centrifugal Pumps for Nomenclature, Definitions, Application and Operation."

B. Comply with HI 1.4.

C. Install pumps to provide access for periodic maintenance including removing motors, impellers, couplings, and accessories.

D. Independently support pumps and piping so weight of piping is not supported by pumps and weight of pumps is not supported by piping.

E. Equipment Mounting:
1. Install base-mounted pumps on cast-in-place concrete equipment bases. Comply with requirements for equipment bases and foundations specified in Division 03 “Cast-in-Place Concrete."

2. Install in-line pumps with continuous-thread hanger rods and spring hangers elastomeric hangers of size required to support weight of in-line pumps.
3. Comply with requirements for vibration isolation and seismic control devices specified in Division 23 Section "Vibration and Seismic Controls for HVAC."
4. Comply with requirements for hangers and supports specified in Division 23 Section "Hangers and Supports for HVAC Piping and Equipment."

3.3 ALIGNMENT

A. Engage a factory-authorized service representative to perform alignment service.

B. Comply with requirements in Hydronics Institute standards for alignment of pump and motor shaft. Add shims to the motor feet and bolt motor to base frame. Do not use grout between motor feet and base frame.

C. Comply with pump and coupling manufacturers' written instructions.

D. After alignment is correct, tighten foundation bolts evenly but not too firmly. Completely fill baseplate with nonshrink, nonmetallic grout while metal blocks and shims or wedges are in place. After grout has cured, fully tighten foundation bolts.

3.4 CONNECTIONS

A. Comply with requirements for piping specified in Division 23 Section "Hydronic Piping." Drawings indicate general arrangement of piping, fittings, and specialties.

B. Where installing piping adjacent to pump, allow space for service and maintenance.

C. Connect piping to pumps. Install valves that are same size as piping connected to pumps.

D. Install check, shutoff, and throttling on discharge side of pumps.

E. Install suction and discharge pipe sizes equal to or greater than diameter of pump nozzles.

F. Install suction diffuser and shutoff valve on suction side of vertical-inline and base-mounted pumps.

G. Install flexible connectors on suction and discharge sides of base-mounted pumps between pump casing and valves.

H. Install pressure gages on pump suction and discharge or at integral pressure-gage tapping, or install single gage with multiple-input selector valve.

I. Install thermometers at pump suction and discharge.

J. Ground equipment according to Division 26 Section "Grounding and Bonding for Electrical Systems."
1. Tighten electrical connectors and terminals according to manufacturer's published torque-tightening values. If manufacturer's torque values are not indicated, use those specified in UL 486A and UL 486B.

K. Connect wiring according to Division 26 Section "Low-Voltage Electrical Power Conductors and Cables."
1. Tighten electrical connectors and terminals according to manufacturer's published torque-tightening values. If manufacturer's torque values are not indicated, use those specified in UL 486A and UL 486B.

L. Refer to Division 23 Section "Testing, Adjusting, and Balancing" for detailed requirements for testing, adjusting, and balancing hydronic systems.

3.5 STARTUP SERVICE

A. Engage a factory-authorized service representative to perform startup service.
   1. Complete installation and startup checks according to manufacturer's written instructions.
   2. Check piping connections for tightness.
   3. Clean strainers on suction piping.
   4. Perform the following startup checks for each pump before starting:
      a. Verify that electrical wiring installation complies with manufacturer's written instructions and the Contract Documents.
      b. Verify bearing lubrication.
      c. Verify that pump is free to rotate by hand and that pump for handling hot liquid is free to rotate with pump hot and cold. If pump is bound or drags, do not operate until cause of trouble is determined and corrected.
      d. Verify that pump is rotating in the correct direction.
   5. Prime pump by opening suction valves and closing drains, and prepare pump for operation.
   6. Open cooling water-supply valves in cooling water supply to bearings, where applicable.
   7. Open cooling water-supply valves if stuffing boxes are water cooled.
   8. Open sealing liquid-supply valves if pumps are so fitted.
   9. Open warm-up valves of pumps handling hot liquids if pumps are not normally kept at operating temperature.
   10. Open circulating line valves if pumps should not be operated against dead shutoff.
   11. Start motor.
   12. Open discharge valve slowly.
   13. Observe leakage from stuffing boxes and adjust sealing liquid valve for proper flow to ensure lubrication of packing. Let packing "run in" before reducing leakage through stuffing boxes; then tighten glands.
   14. Check general mechanical operation of pumps and motors.
   15. Close circulating line valves once there is sufficient flow through pumps to prevent overheating.

B. When pumps are to be started against closed check valves with discharge shutoff valves open, steps are the same, except open discharge valves before starting motors.

3.6 DEMONSTRATION

A. Engage a factory-authorized service representative to train Owner's maintenance personnel to adjust, operate, and maintain hydronic pumps as specified below:
   1. Train Owner's maintenance personnel on procedures and schedules for starting and stopping, troubleshooting, servicing, and maintaining pumps.
   2. Review data in maintenance manuals. Refer to Division 1 Section "Contract Closeout."
   3. Schedule training with Owner, through Architect, with at least seven days' advance notice.

END OF SECTION 232123

THIS PAGE INTENTIONALLY BLANK

SECTION 233113 - METAL DUCTS

PART 1 - GENERAL

1.1 RELATED DOCUMENTS

A. Drawings and general provisions of the Contract, including General and Supplementary Conditions and Division 01 Specification Sections, apply to this Section.

1.2 SUMMARY

A. Section Includes:

1. Single-wall rectangular ducts and fittings.
2. Single-wall round ducts and fittings.
3. Single-wall round and flat-oval ducts and fittings.
4. Exhaust Air Stacks
5. Guy wires and connectors.
6. Sheet metal materials.
7. Duct liner.
8. Sealants and gaskets.
9. Hangers and supports.

B. Related Sections:

1. Section 230593 "Testing, Adjusting, and Balancing for HVAC" for testing, adjusting, and balancing requirements for metal ducts.
2. Section 233300 "Air Duct Accessories" for dampers, sound-control devices, duct-mounting access doors and panels, turning vanes, and flexible ducts.
3. Section 230713 “Duct Insulation” for duct insulation and fire wrap.

C. This Section includes rectangular, round, and flat-oval metal ducts and plenums for heating, ventilating, and air-conditioning systems in pressure classes from minus 2- to plus 10-inch wg.

D. Plenums on the inlet and outlet of Air Handlers shall be constructed in accordance with the requirements of Division 23 Section “HVAC Casings”.

E. This section includes construction of hoods, see details on the drawings.

F. The exhaust riser duct and others as noted are to be covered with 2hr fire wrap and a 22 gauge stainless steel cover.

G. The exhaust stacks shall be constructed and anchored per the SMACNA stack construction guidelines.

1.3 PERFORMANCE REQUIREMENTS

A. Delegated Duct Design: Duct construction, including sheet metal thicknesses, seam and joint construction, reinforcements, and hangers and supports, shall comply with SMACNA's "HVAC Duct Construction Standards - Metal and Flexible" and performance requirements and design criteria indicated in "Duct Schedule" Article.

B. Seismic Performance: Duct hangers and supports shall withstand the effects of earthquake motions determined according to SEI/ASCE 7 and with the requirements specified in Section 230548 "Vibration and Seismic Controls for HVAC."

1. For equipment with a seismic importance factor of 1.0 the term "withstand" means "the unit will remain in place without separation of any parts from the device when subjected to the seismic forces specified."

2. For equipment with a seismic importance factor of 1.5 the term "withstand" means "the unit will remain in place without separation of any parts from the device when subjected to the seismic forces specified and the unit will be fully operational after the seismic event."

C. Structural Performance: Duct hangers and supports shall withstand the effects of gravity loads and stresses within limits and under conditions described in SMACNA's "HVAC Duct Construction Standards - Metal and Flexible"

D. Airstream Surfaces: Surfaces in contact with the airstream shall comply with requirements in ASHRAE 62.1.

1.4 ACTION SUBMITTALS

A. Product Data: For each type of the following products:

1. Liners and adhesives.
2. Sealants and gaskets.
3. Seismic-restraint devices.

B. Shop Drawings:

1. Fabrication, assembly, and installation, including plans, elevations, sections, components, and attachments to other work.
2. Factory- and shop-fabricated ducts and fittings.
3. Duct layout indicating sizes, configuration, liner material, and static-pressure classes.
4. Elevation of top of ducts.
5. Dimensions of main duct runs from building grid lines.
6. Fittings.
7. Reinforcement and spacing.
8. Seam and joint construction.
9. Penetrations through fire-rated and other partitions.
10. Equipment installation based on equipment being used on Project.
11. Locations for duct accessories, including dampers, turning vanes, and access doors and panels.
12. Hangers and supports, including methods for duct and building attachment, seismic restraints, and vibration isolation.
13. Duct fabrication shall not begin until shop drawings have been submitted and reviewed by the mechanical engineer.

C. Delegated-Design Submittal:

1. Sheet metal thicknesses.
2. Joint and seam construction and sealing.
3. Reinforcement details and spacing.
4. Materials, fabrication, assembly, and spacing of hangers and supports.
5. Design Calculations: Calculations for selecting hangers and supports.

1.5 INFORMATIONAL SUBMITTALS

A. Coordination Drawings: Plans, drawn to scale, on which the following items are shown and coordinated with each other, using input from installers of the items involved:

1. Duct installation in congested spaces, indicating coordination with general construction, building components, and other building services. Indicate proposed changes to duct layout.
2. Suspended ceiling components.

3. Structural members to which duct will be attached.
4. Size and location of initial access modules for acoustical tile.
5. Penetrations of smoke barriers and fire-rated construction.
6. Items penetrating finished ceiling including, but not limited to the following:

    a. Lighting fixtures.
    b. Air outlets and inlets.
    c. Speakers.
    d. Sprinklers.
    e. Access panels.
    f. Perimeter moldings.

B. Welding certificates.

C. Field quality-control reports.

1.6 QUALITY ASSURANCE

A. Welding Qualifications: Qualify procedures and personnel according to AWS D1.1/D1.1M, "Structural Welding Code - Steel," for hangers and supports. AWS D1.2/D1.2M, "Structural Welding Code - Aluminum," for aluminum supports. AWS D9.1M/D9.1, "Sheet Metal Welding Code," for duct joint and seam welding.

B. Welding Qualifications: Qualify procedures and personnel according to the following:

1. AWS D1.1/D1.1M, "Structural Welding Code - Steel," for hangers and supports.
2. AWS D1.2/D1.2M, "Structural Welding Code - Aluminum," for aluminum supports.
3. AWS D9.1M/D9.1, "Sheet Metal Welding Code," for duct joint and seam welding.

C. ASHRAE Compliance: Applicable requirements in ASHRAE 62.1, Section 5 - "Systems and Equipment" and Section 7 - "Construction and System Start-up."

D. ASHRAE/IESNA Compliance: Applicable requirements in ASHRAE/IESNA 90.1, Section 6.4.4 - "HVAC System Construction and Insulation."

PART 2 - PRODUCTS

2.1 SINGLE-WALL RECTANGULAR DUCTS AND FITTINGS

A. General Fabrication Requirements: Comply with SMACNA's "HVAC Duct Construction Standards - Metal and Flexible" based on indicated static-pressure class unless otherwise indicated.

B. Transverse Joints: Select joint types and fabricate according to SMACNA's "HVAC Duct Construction Standards - Metal and Flexible," Figure 2-1, "Rectangular Duct/Transverse Joints," for static-pressure class, applicable sealing requirements, materials involved, duct-support intervals, and other provisions in SMACNA's "HVAC Duct Construction Standards - Metal and Flexible."

C. Longitudinal Seams: Select seam types and fabricate according to SMACNA's "HVAC Duct Construction Standards - Metal and Flexible," Figure 2-2, "Rectangular Duct/Longitudinal Seams," for static-pressure class, applicable sealing requirements, materials involved, duct-support intervals, and other provisions in SMACNA's "HVAC Duct Construction Standards - Metal and Flexible."

D. Duct dimensions shown on drawings are inside clear dimensions.

E. Elbows, Transitions, Offsets, Branch Connections, and Other Duct Construction: Select types and fabricate according to SMACNA's "HVAC Duct Construction Standards - Metal and Flexible," Chapter 4,

"Fittings and Other Construction," for static-pressure class, applicable sealing requirements, materials involved, duct-support intervals, and other provisions in SMACNA's "HVAC Duct Construction Standards - Metal and Flexible."

F. The following ductwork is to be fabricated using acid-resistant 0.05-inch-thick type 304 stainless steel.

G. Exhaust ductwork between hoods and the exhaust valves.

H. Exhaust ductwork between the exhaust valves and the main exhaust ductwork.(the exhaust mains can be galvanized).

I. Supply and exhaust ductwork serving BSL-3 area.

D. Cross Breaking or Cross Beading: Cross break or cross bead duct sides 19 inches and larger and 0.0359 inch thick or less, with more than 10 sq. ft. of unbraced panel area, unless ducts are lined.

2.2 SINGLE-WALL ROUND AND FLAT-OVAL DUCTS AND FITTINGS

A. General Fabrication Requirements: Comply with SMACNA's "HVAC Duct Construction Standards - Metal and Flexible," Chapter 3, "Round, Oval, and Flexible Duct," based on indicated static-pressure class unless otherwise indicated.

B. Duct dimensions shown on drawings are inside clear dimensions.

C. Flat-Oval Ducts: Indicated dimensions are the duct width (major dimension) and diameter of the round sides connecting the flat portions of the duct (minor dimension).

D. Transverse Joints: Select joint types and fabricate according to SMACNA's "HVAC Duct Construction Standards - Metal and Flexible," Figure 3-1, "Round Duct Transverse Joints," for static-pressure class, applicable sealing requirements, materials involved, duct-support intervals, and other provisions in SMACNA's "HVAC Duct Construction Standards - Metal and Flexible."

1. Transverse Joints in Ducts Larger Than 60 Inches in Diameter: Flanged.

E. Longitudinal Seams: Not allowed.

F. Tees and Laterals: Select types and fabricate according to SMACNA's "HVAC Duct Construction Standards - Metal and Flexible," Figure 3-5, "90 Degree Tees and Laterals," and Figure 3-6, "Conical Tees," for static-pressure class, applicable sealing requirements, materials involved, duct-support intervals, and other provisions in SMACNA's "HVAC Duct Construction Standards - Metal and Flexible."

2.3 EXHAUST AIR STACKS

A. General Fabrication Requirements: Comply with SMACNA's "HVAC Duct Construction Standards - Metal and Flexible," Chapter 3, "Round, Oval, and Flexible Duct," based on indicated static-pressure class unless otherwise indicated.

B. Transverse Joints: Select joint types and fabricate according to SMACNA's "HVAC Duct Construction Standards - Metal and Flexible," Figure 3-1, "Round Duct Transverse Joints," for static-pressure class, applicable sealing requirements, materials involved, duct-support intervals, and other provisions in SMACNA's "HVAC Duct Construction Standards - Metal and Flexible."

1. Transverse Joints in Ducts Larger Than **60 Inches**in Diameter: Flanged.

C. Longitudinal Seams: Not allowed.

D. Tees and Laterals: Select types and fabricate according to SMACNA's "HVAC Duct Construction Standards - Metal and Flexible," Figure 3-5, "90 Degree Tees and Laterals," and Figure 3-6, "Conical Tees," for static-pressure class, applicable sealing requirements, materials involved, duct-support intervals, and other provisions in SMACNA's "HVAC Duct Construction Standards - Metal and Flexible."

E. Design Wind Loads: **150 mph.**

F. Design for seismic conditions at Project site.

G. Accessories: Terminations, adjustable roof flashings, storm collars, support assemblies, thimbles, firestop spacers, and fasteners; fabricated from similar materials and designs as duct straight sections.

H. Drain: Provide drain section incorporated into base of stack with trap. Seal depth design to prevent seal blowout at highest estimated static pressure.

I. Guying and Bracing Materials

1. Cable: Three minimum galvanized or stainless steel, stranded wires of the following thickness: Four stainless steel

a. Minimum Size: **1/4 inch** in diameter.
b. For ID Sizes **4 to 15 Inches**: **5/16 inch**.
c. For ID Sizes **18 to 24 Inches**: **3/8 inch**.
d. For ID Sizes **27 to 30 Inches**: **7/16 inch**.
e. For ID Sizes **33 to 36 Inches**: **1/2 inch**.
f. For ID Sizes **39 to 48 Inches**: **9/16 inch**.
g. For ID Sizes **51 to 60 Inches**: **5/8 inch**.

2. Cable Hardware: Provide duct angle ring, turnbuckles, cable loop thimbles, cable clamps and all hardware necessary to brace stack.
3. Pipe: Two galvanized steel, **NPS 1-1/4.**
4. Angle Iron: Two galvanized steel, **2 by 2 by 0.25 inch.**

2.4 SHEET METAL MATERIALS

A. General Material Requirements: Comply with SMACNA's "HVAC Duct Construction Standards - Metal and Flexible" for acceptable materials, material thicknesses, and duct construction methods unless otherwise indicated. Sheet metal materials shall be free of pitting, seam marks, roller marks, stains, discolorations, and other imperfections.

B. Galvanized Sheet Steel: Comply with ASTM A 653.

1. Galvanized Coating Designation: G90.
2. Finishes for Surfaces Exposed to View: Mill phosphatized.

C. Carbon-Steel Sheets: Comply with ASTM A 1008, with oiled, matte finish for exposed ducts.

D. Stainless-Steel Sheets: Comply with ASTM A 480/A 480M, Type 304 or 316, as indicated in the "Duct Schedule" Article; cold rolled, annealed, sheet. Exposed surface finish shall be No. 2B, No. 2D, No. 3, or No. 4 as indicated in the "Duct Schedule" Article.

E. Aluminum Sheets: Comply with ASTM B 209 Alloy 3003, H14 temper; with mill finish for concealed ducts, and standard, one-side bright finish for duct surfaces exposed to view.

F. Reinforcement Shapes and Plates: ASTM A 36, steel plates, shapes, and bars; black and galvanized.

1. Where black- and galvanized-steel shapes and plates are used to reinforce aluminum ducts, isolate the different metals with butyl rubber, neoprene, or EPDM gasket materials.

G. Tie Rods: Galvanized steel, 1/4-inch minimum diameter for lengths 36 inches or less; 3/8-inch minimum diameter for lengths longer than 36 inches.

2.5 DUCT LINER

A. Fibrous-Glass Duct Liner: Comply with ASTM C 1071, NFPA 90A, or NFPA 90B; and with NAIMA AH124, "Fibrous Glass Duct Liner Standard."

1. Manufacturers: Subject to compliance with requirements, provide products by one of the following:

   a. CertainTeed Corporation; Insulation Group.
   b. Johns Manville.
   c. Knauf Insulation.
   d. Owens Corning.

2. Maximum Thermal Conductivity:

   a. Type I, Flexible: 0.27 Btu x in./h x sq. ft. x deg F at 75 deg F mean temperature.
   b. Type II, Rigid: 0.23 Btu x in./h x sq. ft. x deg F at 75 deg F mean temperature.

3. Antimicrobial Erosion-Resistant Coating: Apply to the surface of the liner that will form the interior surface of the duct to act as a moisture repellent and erosion-resistant coating. Antimicrobial compound shall be tested for efficacy by an NRTL and registered by the EPA for use in HVAC systems.
4. Water-Based Liner Adhesive:
   a. Comply with NFPA 90A or NFPA 90B and with ASTM C 916.
   b. For indoor applications, adhesive shall have a VOC content of 80 g/L or less when calculated according to 40 CFR 59, Subpart D (EPA Method 24).

B. Flexible Elastomeric Duct Liner: Preformed, cellular, closed-cell, sheet materials complying with ASTM C 534, Type II, Grade 1; and with NFPA 90A or NFPA 90B.

1. Manufacturers: Subject to compliance with requirements, provide products by one of the following:

   a. Aeroflex USA Inc.
   b. Armacell LLC.
   c. Rubatex International, LLC

2. Surface-Burning Characteristics: Maximum flame-spread index of 25 and maximum smoke-developed index of 50 when tested according to UL 723; certified by an NRTL.
3. Liner Adhesive: As recommended by insulation manufacturer and complying with NFPA 90A or NFPA 90B.

   a. For indoor applications, adhesive shall have a VOC content of 50 g/L or less when calculated according to 40 CFR 59, Subpart D (EPA Method 24).

C. Insulation Pins and Washers:

1. Cupped-Head, Capacitor-Discharge-Weld Pins: Copper- or zinc-coated steel pin, fully annealed for capacitor-discharge welding, , length to suit depth of insulation indicated with integral 1-1/2-inch galvanized carbon-steel washer.
   a. 0.135-inch-diameter shank.
2. Insulation-Retaining Washers: With beveled edge sized as required to hold insulation securely in place but not less than 1-1/2 inches in diameter.
   a. Self-locking washers formed from 0.016-inch-thick aluminum.

D. Shop Application of Duct Liner: Comply with SMACNA's "HVAC Duct Construction Standards - Metal and Flexible," Figure 7-11, "Flexible Duct Liner Installation."

1. Adhere a single layer of indicated thickness of duct liner with at least 90 percent adhesive coverage at liner contact surface area. Attaining indicated thickness with multiple layers of duct liner is prohibited.
2. Apply adhesive to transverse edges of liner facing upstream that do not receive metal nosing.
3. Butt transverse joints without gaps, and coat joint with adhesive.
4. Fold and compress liner in corners of rectangular ducts or cut and fit to ensure butted-edge overlapping.
5. Do not apply liner in rectangular ducts with longitudinal joints, except at corners of ducts, unless duct size and dimensions of standard liner make longitudinal joints necessary.
6. Secure liner with mechanical fasteners 4 inches from corners and at intervals not exceeding 12 inchestransversely; at 3 inchesfrom transverse joints and at intervals not exceeding 18 incheslongitudinally.
7. Secure transversely oriented liner edges facing the airstream with metal nosings that have either channel or "Z" profiles or are integrally formed from duct wall. Fabricate edge facings at the following locations:

   a. Fan discharges.
   b. Intervals of lined duct preceding unlined duct.

8. Secure insulation between perforated sheet metal inner duct of same thickness as specified for outer shell. Use mechanical fasteners that maintain inner duct at uniform distance from outer shell without compressing insulation.

   a. Sheet Metal Inner Duct Perforations: 3/32-inch diameter, with an overall open area of 23 percent.

9. Terminate inner ducts with buildouts attached to fire-damper sleeves, dampers, turning vane assemblies, or other devices. Fabricated build-outs (metal hat sections) or other buildout means are optional; when used, secure buildouts to duct walls with bolts, screws, rivets, or welds.

2.6 SEALANT AND GASKETS

A. General Sealant and Gasket Requirements: Surface-burning characteristics for sealants and gaskets shall be a maximum flame-spread index of 25 and a maximum smoke-developed index of 50 when tested according to UL 723; certified by an NRTL.

B. Two-Part Tape Sealing System:

1. Tape: Woven cotton fiber impregnated with mineral gypsum and modified acrylic/silicone activator to react exothermically with tape to form hard, durable, airtight seal.
2. Tape Width: 4 inches.
3. Sealant: Modified styrene acrylic.
4. Water resistant.
5. Mold and mildew resistant.
6. Maximum Static-Pressure Class: 10-inch wg, positive and negative.
7. Service: Indoor and outdoor.
8. Service Temperature: Minus 40 to plus 200 deg F.
9. Substrate: Compatible with galvanized sheet steel (both PVC coated and bare), stainless steel, or aluminum.
10. For indoor applications, sealant shall have a VOC content of 250 g/L or less when calculated according to 40 CFR 59, Subpart D (EPA Method 24).

C. Water-Based Joint and Seam Sealant:

1. Application Method: Brush on.
2. Solids Content: Minimum 65 percent.

3. Shore A Hardness: Minimum 20.
4. Water resistant.
5. Mold and mildew resistant.
6. VOC: Maximum 75 g/L (less water).
7. Maximum Static-Pressure Class: 10-inch wg, positive and negative.
8. Service: Indoor or outdoor.
9. Substrate: Compatible with galvanized sheet steel, stainless steel, or aluminum sheets.

D. Solvent-Based Joint and Seam Sealant:

1. Application Method: Brush on.
2. Base: Synthetic rubber resin.
3. Solvent: Toluene and heptane.
4. Solids Content: Minimum 60 percent.
5. Shore A Hardness: Minimum 60.
6. Water resistant.
7. Mold and mildew resistant.
8. For indoor applications, sealant shall have a VOC content of 250 g/L or less when calculated according to 40 CFR 59, Subpart D (EPA Method 24).
9. VOC: Maximum 395 g/L.
10. Maximum Static-Pressure Class: 10-inch wg, positive or negative.
11. Service: Indoor or outdoor.
12. Substrate: Compatible with galvanized sheet steel (both PVC coated and bare), stainless steel, or aluminum sheets.

E. Flanged Joint Sealant: Comply with ASTM C 920.

1. General: Single-component, acid-curing, silicone, elastomeric.
2. Type: S.
3. Grade: NS.
4. Class: 25.
5. Use: O.
6. For indoor applications, sealant shall have a VOC content of 250 g/L or less when calculated according to 40 CFR 59, Subpart D (EPA Method 24).

F. Flange Gaskets: Butyl rubber, neoprene, or EPDM polymer with polyisobutylene plasticizer.

G. Round Duct Joint O-Ring Seals:

1. Seal shall provide maximum leakage class of 3 cfm/100 sq. ft. at 1-inch wg and shall be rated for 10-inch wg static-pressure class, positive or negative.
2. EPDM O-ring to seal in concave bead in coupling or fitting spigot.
3. Double-lipped, EPDM O-ring seal, mechanically fastened to factory-fabricated couplings and fitting spigots.

2.7 HANGERS AND SUPPORTS

A. Hanger Rods for Noncorrosive Environments: Cadmium-plated steel rods and nuts.

B. Hanger Rods for Corrosive Environments: Electrogalvanized, all-thread rods or galvanized rods with threads painted with zinc-chromate primer after installation.

C. Strap and Rod Sizes: Comply with SMACNA's "HVAC Duct Construction Standards - Metal and Flexible," Table 5-1, "Rectangular Duct Hangers Minimum Size," and Table 5-2, "Minimum Hanger Sizes for Round Duct."

D. Steel Cables for Galvanized-Steel Ducts: Galvanized steel complying with ASTM A 603.

E. Steel Cables for Stainless-Steel Ducts: Stainless steel complying with ASTM A 492.

F. Steel Cable End Connections: Cadmium-plated steel assemblies with brackets, swivel, and bolts designed for duct hanger service; with an automatic-locking and clamping device.

G. Duct Attachments: Sheet metal screws, blind rivets, or self-tapping metal screws; compatible with duct materials.

H. Trapeze and Riser Supports:

1. Supports for Galvanized-Steel Ducts: Galvanized-steel shapes and plates.
2. Supports for Stainless-Steel Ducts: Stainless-steel shapes and plates.
3. Supports for Aluminum Ducts: Aluminum or galvanized steel coated with zinc chromate.

PART 3 - EXECUTION

3.1 DUCT INSTALLATION

A. Drawing plans, schematics, and diagrams indicate general location and arrangement of duct system. Indicated duct locations, configurations, and arrangements were used to size ducts and calculate friction loss for air-handling equipment sizing and for other design considerations. Install duct systems as indicated unless deviations to layout are approved on Shop Drawings and Coordination Drawings.

B. Install ducts according to SMACNA's "HVAC Duct Construction Standards - Metal and Flexible" unless otherwise indicated.

C. Install round and flat-oval ducts in maximum practical lengths.

D. Install ducts with fewest possible joints.

E. Install factory- or shop-fabricated fittings for changes in direction, size, and shape and for branch connections.

F. Unless otherwise indicated, install ducts vertically and horizontally, and parallel and perpendicular to building lines.

G. Install ducts close to walls, overhead construction, columns, and other structural and permanent enclosure elements of building.

H. Install ducts with a clearance of 2 inch, plus allowance for insulation thickness.

I. Route ducts to avoid passing through transformer vaults and electrical equipment rooms and enclosures.

J. Where ducts pass through non-fire-rated interior partitions and exterior walls and are exposed to view, cover the opening between the partition and duct or duct insulation with sheet metal flanges of same metal thickness as the duct. Overlap openings on four sides by at least 1-1/2 inches.

K. Where ducts pass through fire-rated interior partitions and exterior walls, install fire dampers. Comply with requirements in Section 233300 "Air Duct Accessories" for fire and smoke dampers.

L. Protect duct interiors from moisture, construction debris and dust, and other foreign materials. Comply with SMACNA's "IAQ Guidelines for Occupied Buildings Under Construction," Appendix G, "Duct Cleanliness for New Construction Guidelines" .

3.2 INSTALLATION OF EXPOSED DUCTWORK

A. Protect ducts exposed in finished spaces from being dented, scratched, or damaged.

B. Trim duct sealants flush with metal. Create a smooth and uniform exposed bead. Do not use two-part tape sealing system.

C. Grind welds to provide smooth surface free of burrs, sharp edges, and weld splatter. When welding stainless steel with a No. 3 or 4 finish, grind the welds flush, polish the exposed welds, and treat the welds to remove discoloration caused by welding.

D. Maintain consistency, symmetry, and uniformity in the arrangement and fabrication of fittings, hangers and supports, duct accessories, and air outlets.

E. Repair or replace damaged sections and finished work that does not comply with these requirements.

3.3 DUCT SEALING

A. Seal ducts for duct static-pressure, seal classes, and leakage classes specified in "Duct Schedule" Article according to SMACNA's "HVAC Duct Construction Standards - Metal and Flexible."

B. Seal ducts to the following seal classes according to SMACNA's "HVAC Duct Construction Standards - Metal and Flexible":

1. Comply with SMACNA's "HVAC Duct Construction Standards - Metal and Flexible."
2. Outdoor, Supply-Air Ducts: Seal Class A.
3. Outdoor, Exhaust Ducts: Seal Class A.
4. Outdoor, Return-Air Ducts: Seal Class A.
5. Unconditioned Space, Supply-Air Ducts in Pressure Classes 2-Inch wg and Lower: Seal Class A.
6. Unconditioned Space, Supply-Air Ducts in Pressure Classes Higher Than 2-Inch wg: Seal Class A.
7. Unconditioned Space, Exhaust Ducts: Seal Class A.
8. Unconditioned Space, Return-Air Ducts: Seal Class A.
9. Conditioned Space, Supply-Air Ducts in Pressure Classes 2-Inch wg and Lower: Seal Class A.
10. Conditioned Space, Supply-Air Ducts in Pressure Classes Higher Than 2-Inch wg: Seal Class A.
11. Conditioned Space, Exhaust Ducts: Seal Class A.
12. Conditioned Space, Return-Air Ducts: Seal Class A.

3.4 HANGER AND SUPPORT INSTALLATION

A. Comply with SMACNA's "HVAC Duct Construction Standards - Metal and Flexible," Chapter 5, "Hangers and Supports."

B. Building Attachments: Concrete inserts, powder-actuated fasteners, or structural-steel fasteners appropriate for construction materials to which hangers are being attached.

1. Where practical, install concrete inserts before placing concrete.
2. Install powder-actuated concrete fasteners after concrete is placed and completely cured.
3. Use powder-actuated concrete fasteners for standard-weight aggregate concretes or for slabs more than 4 inchesthick.
4. Do not use powder-actuated concrete fasteners for lightweight-aggregate concretes or for slabs less than 4 inchesthick.
5. Do not use powder-actuated concrete fasteners for seismic restraints.

C. Hanger Spacing: Comply with SMACNA's "HVAC Duct Construction Standards - Metal and Flexible," Table 5-1, "Rectangular Duct Hangers Minimum Size," and Table 5-2, "Minimum Hanger Sizes for Round Duct," for maximum hanger spacing; install hangers and supports within 24 inches of each elbow and within 48 inches of each branch intersection.

D. Hangers Exposed to View: Threaded rod and angle or channel supports.

E. Support vertical ducts with steel angles or channel secured to the sides of the duct with welds, bolts, sheet metal screws, or blind rivets; support at each floor and at a maximum intervals of 16 feet.

F. Install upper attachments to structures. Select and size upper attachments with pull-out, tension, and shear capacities appropriate for supported loads and building materials where used.

3.5 SEISMIC-RESTRAINT-DEVICE INSTALLATION

A. Install ducts with hangers and braces designed to support the duct and to restrain against seismic forces required by applicable building codes. Comply with the requirements specified in Section 230548 "Vibration and Seismic Controls for HVAC."
   1. Comply with ASCE/SEI 7.

3.6 CONNECTIONS

A. Make connections to equipment with flexible connectors complying with Section 233300 "Air Duct Accessories."

B. Comply with SMACNA's "HVAC Duct Construction Standards - Metal and Flexible" for branch, outlet and inlet, and terminal unit connections.

3.7 PAINTING

A. Paint interior of metal ducts that are visible through registers and grilles and that do not have duct liner. Apply one coat of flat, black, latex paint over a compatible galvanized-steel primer. Paint materials and application requirements are specified in Section 099113 "Exterior Painting" and Section 099123 "Interior Painting."

3.8 FIELD QUALITY CONTROL

A. Perform tests and inspections.

B. Leakage Tests:

   1. Comply with SMACNA's "HVAC Air Duct Leakage Test Manual." Submit a test report for each test.
   2. Test the following systems:

      a. Ducts with a Pressure Class Higher Than 3-Inch wg: Test representative duct sections, selected by Architect from sections installed, totaling no less than 25 percent of total installed duct area for each designated pressure class.
      b. Supply Ducts with a Pressure Class of 2-Inch wg or Higher: Test representative duct sections, selected by Architect from sections installed, totaling no less than 50 percent of total installed duct area for each designated pressure class.
      c. Return Ducts with a Pressure Class of 2-Inch wg or Higher: Test representative duct sections, selected by Architect from sections installed, totaling no less than 50 percent of total installed duct area for each designated pressure class.
      d. Exhaust Ducts with a Pressure Class of 2-Inch wg or Higher: Test representative duct sections, selected by Architect from sections installed, totaling no less than 50 percent of total installed duct area for each designated pressure class.
      e. Outdoor Air Ducts with a Pressure Class of 2-Inch wg or Higher: Test representative duct sections, selected by Architect from sections installed, totaling no less than 50 percent of total installed duct area for each designated pressure class.

3. Disassemble, reassemble, and seal segments of systems to accommodate leakage testing and for compliance with test requirements.
4. Test for leaks before applying external insulation.
5. Conduct tests at static pressures equal to maximum design pressure of system or section being tested. If static-pressure classes are not indicated, test system at maximum system design pressure. Do not pressurize systems above maximum design operating pressure.
6. Give seven days' advance notice for testing.

C. Duct System Cleanliness Tests:

1. Visually inspect duct system to ensure that no visible contaminants are present.
2. Test sections of metal duct system, chosen randomly by Owner, for cleanliness according to "Vacuum Test" in NADCA ACR, "Assessment, Cleaning and Restoration of HVAC Systems."

   a. Acceptable Cleanliness Level: Net weight of debris collected on the filter media shall not exceed 0.75 mg/100 sq. cm.

3. Any liner showing evidence that is has wet at any time shall be removed and replaced with new liner.
   a. Disinfect affected sheet metal, and pins.
   b. Install new liner per specifications
   c. Seal friable edges and seams of repaired liner.

D. Duct system will be considered defective if it does not pass tests and inspections.

E. Prepare test and inspection reports.

3.9 DUCT CLEANING

A. Clean new duct system before testing, adjusting, and balancing.

B. Use service openings for entry and inspection.

1. Create new openings and install access panels appropriate for duct static-pressure class if required for cleaning access. Provide insulated panels for insulated or lined duct. Patch insulation and liner as recommended by duct liner manufacturer. Comply with Section 233300 "Air Duct Accessories" for access panels and doors.
2. Disconnect and reconnect flexible ducts as needed for cleaning and inspection.
3. Remove and reinstall ceiling to gain access during the cleaning process.

C. Particulate Collection and Odor Control:

1. When venting vacuuming system inside the building, use HEPA filtration with 99.97 percent collection efficiency for 0.3-micron-size (or larger) particles.
2. When venting vacuuming system to outdoors, use filter to collect debris removed from HVAC system, and locate exhaust downwind and away from air intakes and other points of entry into building.

D. Clean the following components by removing surface contaminants and deposits:

1. Air outlets and inlets (registers, grilles, and diffusers).
2. Supply, return, and exhaust fans including fan housings, plenums (except ceiling supply and return plenums), scrolls, blades or vanes, shafts, baffles, dampers, and drive assemblies.
3. Air-handling unit internal surfaces and components including mixing box, coil section, air wash systems, spray eliminators, condensate drain pans, humidifiers and dehumidifiers, filters and filter sections, and condensate collectors and drains.
4. Coils and related components.
5. Return-air ducts, dampers, actuators, and turning vanes except in ceiling plenums and mechanical equipment rooms.

6. Supply-air ducts, dampers, actuators, and turning vanes.
7. Dedicated exhaust and ventilation components and makeup air systems.

E. Mechanical Cleaning Methodology:

1. Clean metal duct systems using mechanical cleaning methods that extract contaminants from within duct systems and remove contaminants from building.
2. Use vacuum-collection devices that are operated continuously during cleaning. Connect vacuum device to downstream end of duct sections so areas being cleaned are under negative pressure.
3. Use mechanical agitation to dislodge debris adhered to interior duct surfaces without damaging integrity of metal ducts, duct liner, or duct accessories.
4. Clean fibrous-glass duct liner with HEPA vacuuming equipment; do not permit duct liner to get wet. Replace fibrous-glass duct liner that is damaged, deteriorated, or delaminated or that has friable material, mold, or fungus growth.
5. Clean coils and coil drain pans according to NADCA 1992. Keep drain pan operational. Rinse coils with clean water to remove latent residues and cleaning materials; comb and straighten fins.
6. Provide drainage and cleanup for wash-down procedures.
7. Antimicrobial Agents and Coatings: Apply EPA-registered antimicrobial agents if fungus is present. Apply antimicrobial agents according to manufacturer's written instructions after removal of surface deposits and debris.

3.10 START UP

A. Air Balance: Comply with requirements in Section 230593 "Testing, Adjusting, and Balancing for HVAC."

3.11 DUCT SCHEDULE

A. Fabricate ducts with galvanized sheet steel unless noted below to be fabricated with stainless steel.

B. Ductwork running in areas where there are no ceilings or when noted on the drawings shall be doubled wall duct and shall meet the requirements indicated below.

C. Supply Ducts:

1. Ducts Connected to Fan Coil Units, Furnaces, Heat Pumps, and Terminal Units:

   a. Pressure Class: Positive 2-inch wg.
   b. Minimum SMACNA Seal Class: A.
   c. SMACNA Leakage Class for Rectangular: 16.
   d. SMACNA Leakage Class for Round: 8.

2. Ducts Connected to Variable-Air-Volume Air-Handling Units:

   a. Pressure Class: Positive 6-inch wg.
   b. Minimum SMACNA Seal Class: A.
   c. SMACNA Leakage Class for Rectangular: 4.
   d. SMACNA Leakage Class for Round: 2.

3. Ducts Connected to Equipment Not Listed Above:

   a. Pressure Class: Positive 4-inch wg.
   b. Minimum SMACNA Seal Class: A.
   c. SMACNA Leakage Class for Rectangular: 4.
   d. SMACNA Leakage Class for Round: 2.

D. Return Ducts:

1. Ducts Connected to Fan Coil Units, Furnaces, Heat Pumps, and Terminal Units:

   a. Pressure Class: Positive or negative 2-inch wg.
   b. Minimum SMACNA Seal Class: A.
   c. SMACNA Leakage Class for Rectangular: 16.
   d. SMACNA Leakage Class for Round: 8.

2. Ducts Connected to Air-Handling Units:

   a. Pressure Class: Positive or negative 2-inch wg.
   b. Minimum SMACNA Seal Class: A.
   c. SMACNA Leakage Class for Rectangular: 16.
   d. SMACNA Leakage Class for Round: 8

3. Ducts Connected to Equipment Not Listed Above:

   a. Pressure Class: Positive or negative 3-inch wg.
   b. Minimum SMACNA Seal Class: A.
   c. SMACNA Leakage Class for Rectangular: 8.
   d. SMACNA Leakage Class for Round: 4.

E. Exhaust Ducts:

1. Ducts Connected to Fans Exhausting ASHRAE 62.1, Class 1 and 2 (Toilet & Housekeeping rooms) Air:

   a. Pressure Class: Negative 2-inch wg.
   b. Minimum SMACNA Seal Class: A.
   c. SMACNA Leakage Class for Rectangular: 16.
   d. SMACNA Leakage Class for Round: 4.

2. Ducts Connected to Variable-Air-Volume Air-Handling Units:

   a. Pressure Class: Positive 6-inch wg.
   b. Minimum SMACNA Seal Class: A.
   c. SMACNA Leakage Class for Rectangular: 4.
   d. SMACNA Leakage Class for Round: 2.

3. Branch Ducts Connected to Fans Exhausting Laboratory and Process ASHRAE 62.1, Class 3 and 4 air (Lab hoods, exhaust hoods, snorkels and equipment exhaust connections branch ducts):

   a. Type 304, stainless-steel sheet.

      1) 0.05-inch thick.

      2) Exposed to View: No. 4 finish.

      3) Concealed: No. 2B finish.

   b. Pressure Class: Positive or negative 6-inch wg.
   c. Minimum SMACNA Seal Class: Welded seams, joints, and penetrations.
   d. SMACNA Leakage Class: 2.
   e. Main laboratory exhaust trunks to be galvanized steel with same pressure, seal and leakage class.
   f. Exhaust stacks shall be constructed from plate steal and anchored per the SMACNA stack construction guidelines. Stack shall be painted inside and out with epoxy paint or color selected by architect.

4. Ducts Connected to Equipment Not Listed Above:

   a. Pressure Class: Positive or negative 4-inch wg.
   b. Minimum SMACNA Seal Class: A.
   c. SMACNA Leakage Class for Rectangular: 4.
   d. SMACNA Leakage Class for Round: 2.

F. Outdoor-Air (Not Filtered, Heated, or Cooled) Ducts:

1. Ducts Connected to Fan Coil Units, Furnaces, Heat Pumps, and Terminal Units:

   a. Pressure Class: Positive or negative 2-inch wg.
   b. Minimum SMACNA Seal Class: A.
   c. SMACNA Leakage Class for Rectangular: 16.
   d. SMACNA Leakage Class for Round and Flat Oval: 4.

2. Ducts Connected to Air-Handling Units:

   a. Pressure Class: Positive or negative 3-inch wg.
   b. Minimum SMACNA Seal Class: A.
   c. SMACNA Leakage Class for Rectangular: 8.
   d. SMACNA Leakage Class for Round: 4.

3. Ducts Connected to Equipment Not Listed Above:

   a. Pressure Class: Positive or negative 3-inch wg.
   b. Minimum SMACNA Seal Class: A.
   c. SMACNA Leakage Class for Rectangular: 8.
   d. SMACNA Leakage Class for Round: 4.

G. Intermediate Reinforcement:

1. Galvanized-Steel Ducts: Galvanized steel.

2. Stainless-Steel Ducts:

   a. Exposed to Airstream: Match duct material.
   b. Not Exposed to Airstream: Match duct material.

3. Aluminum Ducts: Aluminum.

H. Duct Liner Restrictions:

1. Duct Liner exposed to air movement shall not be used on medium pressure ductwork (2000 to 4000 FPM velocity). See section 230713 “Duct Insulation” for insulation requirements.

2. Duct Liner exposed to air movement shall not be used on high pressure ductwork (Greater than 4000 FPM velocity). See section 230713 “Duct Insulation” for insulation requirements.

3. All duct liner shall meet all of the requirements found in 2012 IECC

I. Liner:

1. Low Pressure Supply Air Ducts (Less than 2000 FPM velocity): Fibrous glass, Type I, 1-1/2 inch thick with a minimum R value of 6.0.

2. Return Air Ducts: Fibrous glass, Type I, 1-1/2 inch thick with a minimum R value of 6.0.

3. Exhaust Air Ducts: Fibrous glass, Type I, 1-1/2 inch thick with a minimum R value of 6.0.

4. Supply Fan Plenums: Fibrous glass, Type I, 1-1/2 inch thick with a minimum R value of 6.0.

5. Return- and Exhaust-Fan Plenums: Fibrous glass, Type II, 1-1/2 inch thick with a minimum R value of 6.0.

6. Transfer Ducts: Fibrous glass, Type I [or flexible elastomeric], 1-1/2 inch thick with a minimum R value of 6.0.

J. Exterior Ductwork Liner Insulation:

1. Supply Air Ducts: 2 inch thick with a minimum R value of 8.0.

2. Return Air Ducts: 2 inch thick with a minimum R value of 8.0.

3. Exhaust Air Ducts: 2 inch thick with a minimum R value of 8.0.

K. Elbow Configuration:

1. Rectangular Duct: Comply with SMACNA's "HVAC Duct Construction Standards - Metal and Flexible," Figure 4-2, "Rectangular Elbows."

   a. Radius Type RE 1 with minimum 1.5 radius-to-diameter ratio.
   b. Radius Type RE 3 with minimum 1.0 radius-to-diameter ratio and two vanes.
   c. Mitered Type RE 2 with vanes complying with SMACNA's "HVAC Duct Construction Standards - Metal and Flexible," Figure 4-3, "Vanes and Vane Runners," and Figure 4-4, "Vane Support in Elbows."

2. Round Duct: Comply with SMACNA's "HVAC Duct Construction Standards - Metal and Flexible," Figure 3-4, "Round Duct Elbows."

   a. Minimum Radius-to-Diameter Ratio and Elbow Segments: Comply with SMACNA's "HVAC Duct Construction Standards - Metal and Flexible," Table 3-1, "Mitered Elbows." Elbows with less than 90-degree change of direction have proportionately fewer segments.

      1) Velocity 1000 fpm or Lower: 1.0 radius-to-diameter ratio and three segments for 90-degree elbow.
      2) Velocity 1000 to 1500 fpm: 1.5 radius-to-diameter ratio and four segments for 90-degree elbow.
      3) Velocity 1500 fpm or Higher: 1.5 radius-to-diameter ratio and five segments for 90-degree elbow.
      4) Radius-to Diameter Ratio: 1.5.

   b. Round Elbows, 12 Inches and Smaller in Diameter: Stamped or pleated.
   c. Round Elbows, 14 Inches and Larger in Diameter: Welded.

L. Branch Configuration:

1. Rectangular Duct: Comply with SMACNA's "HVAC Duct Construction Standards - Metal and Flexible," Figure 4-6, "Branch Connection."

a. Rectangular Main to Rectangular Branch: 45-degree entry high efficiency take-off.
b. Rectangular Main to Round Branch: 45-degree entry high efficiency take-off.

2. Round and Flat Oval:

a. Comply with SMACNA's "HVAC Duct Construction Standards - Metal and Flexible," Figure 3-5, "90 Degree Tees and Laterals," and Figure 3-6, "Conical Tees." Saddle taps are permitted in existing duct.
b. Velocity 1000 to 1500 fpm: 45-degree entry high efficiency tap.
c. Velocity 1500 fpm or Higher: 45-degree lateral.

END OF SECTION 233113

THIS PAGE INTENTIONALLY BLANK

SECTION 237326 - FAN WALL TYPE CUSTOM AIR-HANDLING UNITS

PART 1 – GENERAL

1.1 RELATED DOCUMENTS

A. Drawings and general provisions of the Contract, including General and Supplementary Conditions and Division 1 Specification Sections, apply to this Section.

4

1.2 SUMMARY

A. This Section includes custom air-handling units for indoor installations.

1. Factory-fabricated, field-assembled, double-wall casings for HVAC equipment
2. Shop Drawings for each air handler are required.
3. This division shall be responsible for complete submittals which shall include the engineering of the Casings, filters, coils. Dampers and fans. The Air Handlers shall be engineering and submitted with shop drawings.
4. Supply Air handlers shall be provided with a multi-fan array. The multiply fans must comply with the manufactures recommendations distances for space before, after and to the sides of each fan.
5. The fans shall be wire for a single point connection for both supply and exhaust. This division shall provide VFD's which shall be factory wired as well. The supply to have one VFD per fan and ~~return~~ exhaust fans shall each have 2 VFD's one primary and one for standby.
6. The Manufacturer shall submit with his bid the delivery time to the site and the ship date.
7. The units are to be painted the color as directed by the Architect.
8. See drawings for exact configurations.
9. All curbs by this division.
10. Provide zero static backdraft dampers on each supply fan inlet.
11. Air Handlers are to be single point connection.
12. Provide a magnehelic gauge across all pre and final filters and provide a dp switch tie into the control system to alert maintenance.
13. Provide magnehelic gauge across the fanwall on the supply for tsp
14. Ensure fan wall components are properly caulked to prevent air from leaking back through the seams.
15. Each fan system should be provided with a backdraft damper for each fan.

1.3 SUBMITTALS

A. General: Submit each item in this Article according to the Conditions of the Contract and Division 1 Specification Sections.

B. Product Data for each central-station air-handling unit specified, including the following:

1. Certified fan-performance curves with system operating conditions indicated.
2. Certified fan-sound power ratings.
3. Certified coil-performance ratings with system operating conditions indicated.
4. Motor ratings and electrical characteristics plus motor and fan accessories.
5. Material gages and finishes.
6. Filters with performance characteristics.
7. Dampers, including housings, linkages, and operators.
8. Humidifiers
9. Evaporative media.

C. Shop Drawings from manufacturer detailing equipment assemblies and indicating dimensions, weights, loadings, required clearances, method of field assembly, components, and location and size of each field connection.

D. Coordination Drawings, including floor plans and sections drawn to scale. Submit with Shop Drawings. Show mechanical-room layout and relationships between components and adjacent structural and mechanical elements. Show support locations, type of support, and weight on each support. Indicate and certify field measurements.

E. Field test reports indicating and interpreting test results relative to compliance with specified requirements.

F. Maintenance data for custom air-handling units to include in the operation and maintenance manual.

1.4 QUALITY ASSURANCE

A. UL and NEMA Compliance: Provide motors required as part of air-handling units that are listed and labeled by UL and comply with applicable NEMA standards.

B. Comply with NFPA 70 for components.

C. Listing and Labeling: Provide electrically operated components specified in this Section that are listed and labeled.

1. The Terms "Listed" and "Labeled": As defined in the National Electrical Code, Article 100.
2. Listing and Labeling Agency Qualifications: A "Nationally Recognized Testing Laboratory" (NRTL) as defined in OSHA Regulation 1910.7.

D. Coordination: Coordinate layout and installation of air-handling units with piping and ductwork and with other installations.

E. Air Handling units and major components shall be products of Manufacturing firms regularly engaged in manufacture of this equipment with characteristics and capacities required and whose products have been in satisfactory use in similar service for not less than 10 years.

1.5 DELIVERY, STORAGE, AND HANDLING

A. Deliver air-handling unit as a factory-assembled module with protective crating and covering.

B. Lift and support units with manufacturer's designated lifting or supporting points.

C. Field assembled units furnished in multiple sections per manufacturers instructions.

1.6 SEQUENCING AND SCHEDULING

A. Coordinate size and location of concrete housekeeping bases. Cast anchor-bolt inserts into base.

B. Coordinate size and location of structural-steel support members.

1.7 EXTRA MATERIALS

A. Furnish extra materials described below that match products installed, are packaged with protective covering for storage, and are identified with labels describing contents.

B. Filters: Furnish 1 set for each air-handling unit.

C. Provide one extra set of Belts for Exhaust fans

1.8 WARRANTY

A. The special warranty specified in this Article shall not deprive Owner of other rights Owner may have under other provisions of Contract Documents and shall be in addition to, and run concurrent with, other warranties made by Contractor under requirements of Contract Documents.

B. Special Warranty: Submit a written warranty signed by Installer agreeing to repair any leaks in the exterior units casings for a period 5 years from date of Substantial Completion.

PART 2 - PRODUCTS

2.1 MANUFACTURERS

A. Basis of design: Huntair

1. ClimateCraft.
2. Energy Labs.
3. Governair.
4. Huntair.
5. Temtrol.
6. Ventrol.

2.2 MANUFACTURED UNITS

A. General Description: Factory assembled, consisting of fans, motor and drive assembly, coils, damper, plenums, filters, drip pans, and mixing dampers.

B. Motor and Electrical Components: Refer to Division 23 Section "Motors."

2.3 CABINET

A. Casing Construction: Walls and roof to be 3” Double Wall construction as indicated in the specification for each section of the unit. Cabinet is with a minimum 16-gauge Painted G90 galvanized steel solid outer panel and inner liner(s) for double wall construction. Panels to be of standing seam construction with seams turned inward to provide a smooth flush exterior. Panels to be screwed together on maximum 8” centers with minimum 5/16” zinc plated screws sealed with a continuous bead of Sikaflex-1A caulking applied between the matching panel seams prior to assembly (sandwiched and sealed by the compression of the panels), and with a final bead following assembly on both the exterior and interior panel seams to produce an air tight unit. Wall to base skin and wall to roof panel seams shall be sealed with 1/2” x 1/8” Poron-Rubber strips and all exterior seams shall be continuously caulked to assure leak-proof integrity of the unit housing. AHU unit housing shall be constructed to prevent conditioned air bypass or mitigation through unit walls, roof and floor around any interior partition or component blank-off walls such as for filters, coils or fan bulkheads.

B. Insulation: Panels to be insulated with 3” thick, 3.0 pcf, fiberglass insulation. Insulation to meet NFPA 90A, NFPA 90B and ASTM E 84 requirements for Flame Spread of 25 or less and Smoke Development of 50 or less. Insulation shall have a thermal conductivity K factor of .23 Btu/hr/Sq. ft/degree F @ 75 F mean and provide the following sound attenuation characteristics (per ASTM C 423 - Type “A” Mounting):

Octave bands	125	250	500	1k	2k	4k	8k
Absorption Coefficient	.17	.80	1.16	1.15	1.11	1.10	1.05 (4” thick, 3.0 pcf)

All cut edges of the board insulation shall be completely enclosed by the unit panels.
A finish bead of caulking will be applied over all foil to panel seams and/or inner liners to main panel seams to completely encapsulate the insulation.

C. Interior liners: to be minimum 20-gauge, G90 galvanized steel; solid and / or perforated metal throughout the unit for the walls and roof, except in applicable cooling coil section, humidifier section and the plenum section immediately downstream of the humidifier will have solid , G90 galvanized steel

inner liners. A finish bead of caulking will be applied between the liner and the interior panel seams to completely seal the panel.

D. Roof panels: weatherproof roofs shall be constructed with raised seams. Raised Roof Seams to be sealed between sandwiched panels with a bead of silicone caulking. The top of each roof panel seam is to receive a final bead of caulking and be sealed with a 16-gauge roof cleat mechanically formed to enclose the standing seam at the roof panel to panel joint. Roof to slope from center axis of roof to sides a minimum 1/8" per foot to allow complete water drainage and preclude standing water. Roof panels to overlap the side panels a minimum 1" all around the unit creating an overhang to reduce direct runoff from the roof down over the side panels. All doors and louvers shall have a formed rain shield extending a minimum of 1" from the wall to direct water away from the door and louver openings.

E. Stiffeners of angle steel shall be supplied as required to maintain a casing deflection criteria of 1/100 at 1.5 times the working pressure.

2.4 BASE CONSTRUCTION

A. Unit bases shall be constructed from structural steel, channel iron frame around the entire perimeter of the unit and provided with intermediate structural tubing, channel and angle iron as required to support all internal components. All tubing, channel and angle joints shall be solid welded. Bolted or formed channel bases are not acceptable.

B. The unit base shall be covered with 12GA G90 caulked sealed seams. Base shall be provided with removable lifting lugs minimum (4) per section, properly located to assure uniform loading. Maximum spacing between lifting lugs shall be 120".

C. Base shall be insulated with 2" polyurethane foam under the base skin with a minimum 20-gauge G90 galvanized steel liner. Insulation to meet same criteria as explained under the cabinet casing requirements.

D. Drain pans shall be 304 SS, double-walled construction with solid welded seams for complete water capture and containment. Pans under cooling coils shall extend a minimum 12" passed the leaving face of the coil in direction of airflow. Drain Pans shall be fully recessed in the unit floor and all headers and return bends shall be located over the drain pan for collection of all condensate forming on headers and return bends. All coils shall be easily removable without cutting or removing any portion of the drain pan. Pans shall be insulated between the liner and the main pan. Pans shall be IAQ Double Sloping to a single drain. Drain connection shall be a minimum 1-1/4" diameter MIPS thread extending out through the channel base the same side as the coil connections unless other wised indicated on the drawings. Pans shall be provided for cooling coils, humidifiers, out side air intakes if unit is mounted on the roof and under other components as required. Mastic coated drain pans are not acceptable as they are "non-Cleanable".

E. All large openings (greater than one square foot) in the floor, including dampers openings, shall be covered with a removable, Powder Coated, heavy gauge, steel grating bolted in place and suitable for walking on. Grating shall be capable of supporting minimum 300 pounds and shall prevent personnel and large objects from falling through into the space / duct below the opening.

2.5 ACCESS DOORS

A. Access doors shall be 3" thermal break construction with exterior panel minimum 20-gauge Bonderized Powder Coated, G90 galvanized and interior panel minimum 20-gauge Bonderized Powder Coated, G90 galvanized. Door jam & frame shall be constructed of extruded aluminum with continuously welded corners for rigidity. Door panels shall be insulated with (3") expandable foam insulation completely encapsulated and sealed between the door panels and frame. Provide doors located and sized to allow for routine maintenance including motor replacement and filter replacement, electrical components and any other sections or components requiring access or maintenance.

B. Doors shall be provided with a minimum (2) dual acting heavy duty key locking composite latches through 72" high, (3) latches over 72" high. Latches shall be operable from both the interior and exterior of the unit. Door latches on doors into fan sections shall be provided with a hasp or other

mechanism to facilitate locking of the doors. Door hinge shall be heavy duty Stainless Steel. Door shall be sealed with continuous hollow closed cell foam gasket.

C. Doors to be provided with double high performance closed cell replaceable neoprene bulb type gasket seals around the entire perimeter of the door / frame.

D. Doors shall open against static pressure unless obstructed by internal components. If obstructed by internal components on the positive sections requiring access, the doors shall open with pressure and shall be provided with a safety restraining mechanism. Doors used to access rotating equipment shall be provided with an OSHA approved safety latching mechanism requiring a tool to open and shall also have a highly visible, permanently fixed, caution sign on the exterior of the door. Doors with access to moving parts must also have locking hardware and meet current UL mechanical protection guidelines. Standard door size shall be 24” wide by 60” high unless restricted by height or section width.

E. Doors shall be provided with thermal pane wire glass viewing windows as called out for on the unit drawings in the specifications. Minimum window size to be 10” x 10” Thermal Break. Note: Door size limits window availability / maximum window size.

2.6 FINISH

A. Base structure shall have a painted finish which is both lead and cadmium free. Painted finish is tan or Custom Color as specified by Architect / Owner with 7,000 Hour Salt Spray undercoat.

B. All exterior wall, roof, interior divider walls, racks, blank-offs and Base Structure shall be coated with Paint which is both lead and cadmium free.

The coating process is completed prior to assembly of the unit too unsure all joined surfaces (panel to panel joints), are covered. Spray or brush applied coatings on the exterior of the cabinet only are not acceptable. Powder Paint to have passed Salt Spray Resistance Test ASTM B 117-90 Minimum 1500 Hours, Impact Test ASTM D 2794-90 up to 160 lbs and Humidity Resistance Test ASTM D 2247-87 Minimum 1500-hour test w/ maximum blister 1/16 in/1 mm. Powder Coated Finish Color to be Gray, Sky White or Custom Color as specified by Architect / Owner with 7,000 Hour Salt Spray undercoat for superior corrosion resistance and easy cleaning.

2.7 SUPPLY ~~AND RETURN~~ FANS

A. The FANWALL Array, shall consist of multiple, direct driven, arrangement 4 plenum fans constructed per AMCA requirements for the duty Class III. All fans shall be selected to deliver design air flow at the specified operating TSP at the specified motor speed and as scheduled. The FANWALL Array shall be selected to operate at a system Total Static Pressure that does not exceed 90% of the specified fan’s peak static pressure producing capability at the specified fan speed.

Each fan/motor “cube” cell shall consist of an 11 gauge, A60 galvanized steel intake wall, 14 gauge spun steel inlet funnel, and an 11 gauge, A60 galvanized steel motor support plate and structure. The fan cartridge intake wall, inlet funnel, and motor support structure shall have a Powder Coated Finish Color to be Gray or Sky White for superior corrosion resistance and easy cleaning.

When using FANWALL Array Control with Variable Frequency Drive(s), all motors shall be IEEE inverter duty, premium efficiency, TENV, T-frame motors selected at the specified or scheduled operating voltage and RPM(s). (No ODP Motors). Each motor shall be provided with a built in Shaft Grounding Ring (SGR) to prevent Electrical Discharge Machining (EDM) damage to the motor bearings and extend motor life by safely channeling harmful shaft currents to ground. Alternative protection methods, such as isolated bearings or ceramic bearings, must be pre-approved by the engineer.

Each fan/motor assembly shall be dynamically balanced to meet AMCA standard 204-96, category BV-5, Grade 1.0 with peak to peak deflection equal to or less than 0.5 mil at the design operating speed for the fan/motor cartridge.

Scheduled motor HP for each air handler is maximum HP allowed. Unless required for N+1 fans running to maintain full air flow. Then the HP needs to be adjusted for this condition. N+1 means that the air handler will maintain static pressure and air flow with one fan off.

FANWALL Arrays do NOT require spring isolators, seismic isolation, or inertia bases. Other manufacturers must provide spring isolators, if required for vibration and sound isolation.

B. The Discharge and Inlet bare fan Sound Power Levels for each individual octave band shall NOT exceed the values specified or scheduled for each individual Supply / Return FANWALL Array.

C. The FANWALL Array(s) shall be provided with Coplanar Silencer package(s) with (fiberglass or Huntair Melamine) sound absorption, acoustical media as noted below and or scheduled. The Coplanar Silencers shall NOT increase the fan total static pressure, nor shall they increase the airway tunnel length of the FWT Air Handling Unit when compared to the same FWT Air Handling Unit without a Coplanar Silencer array. The Coplanar Silencers (SOUND ATTENUATORS) will reduce the bare fan discharge sound power levels as noted below and/or scheduled. If NOT otherwise specified, the acoustical silencers shall reduce the bare fan discharge sound power levels by a minimum of 15 db, re 10^-12 watts with center frequencies of 125, 250, 500, 1000, 2000, 4000, and 8000 HZ when compared to the same Air Handling Unit without the silencers.

D. Each fan in the (Supply Air or Return Air) FANWALL Array shall be provided with an Inlet Airflow Straightener to reduce the bare fan inlet and discharge sound power levels as noted below and / or scheduled.

E. The FANWALL Array shall consist of multiple fan and motor ”cells”, spaced in the air way tunnel cross-section to provide a uniform air flow and velocity profile across the entire air way tunnel cross-section and components contained therein. Each fan motor shall be individually wired to an electrical control panel containing a Motor Starter Protector (MSP) for each motor. The Motor Starter Protectors will be wired to Variable Frequency Drive(s) (VFD) as specified elsewhere. Wire sizing shall be determined, and installed, in accordance with applicable NEC standards.

~~Redundant Variable Frequency Drives shall be provided. In a failure mode, the Redundant (back-up) VFD maintains control of CFM and Static Pressure over the entire operation range.~~ Variable Frequency Drives shall be provided for each fan cell. In a failure mode the back draft damper will close to prevent short cycling and the other fans will ramp up to main design cfm. All manufactures need to size motor HP to cover a N+1 condition. If it is determined that the manufacturer must increase the motor HP from that scheduled in order to accomplish N+1 redundancy then the AHU manufacturer or its local rep wil be held responsible to pay for any & all costs to all trades involved (i.e. both materials & labor) that are associated with the increased motor HP.

F. The FANWALL Array shall produce a uniform air flow profile and velocity profile within the airway tunnel of the air handling unit not to exceed the specified cooling coil and/or filter bank face velocity when measured at a point 12” from the intake side of the FANWALL Array septum wall, and at a distance of 42” from the discharge side of the FANWALL Array septum wall.

G. Each fan/motor assembly shall be removable through a 30” wide, free area, access door located on the (discharge and / or inlet) side of the FANWALL Array.) NOTE: Narrower width access doors may require the break-down of the fan/motor assemblies into separate fan and motor components. Refer to plans for locations and sizes of the Access Doors.

H. FANWALL Array “cube(s)” will be equipped with zero static back draft damper to prevent air going backwards through the inactive cube(s).

I. Each fan will need to have an individual proof of star-up, run, shutdown and alarm capabilities.

J. Each fan will need to be completely sealed to each individual unit.

K. Each fan will need to be completely sealed to the exterior of the unit.

L. Each fan wall motor will need to have grounded bearings to reduce milamp escape to bearings through the drive.

2.8 EXHAUST FANS

A. Belt Drive Backward Inclined Fan

1. Performance ratings: Comform to AMCA standard 211 and 311. Fans must be tested in accordance with ANSI/AMCA Standard 210-07 and AMCA Standard 300-05 in an AMCA accredited laboratory. Fans shall be certified to bear the AMCA Label for air and sound performance
2. Each fan shall be given an electronic vibration analysis in accordance with ANSI/AMCA Standard 204-05 while operating at the specified fan RPM. The vibration signatures shall be taken on each bearing in the horizontal, vertical and axial direction. Report shall be provided at no charge to customer upon request.
3. Fan housing is to be aerodynamically designed with high-efficiency inlet, engineered to reduce incoming air turbulence.
4. Fans to be Class III
5. Fan wheel shall be of the non-overloading single width backward inclined. Wheels shall be statically and dynamiccal balanced to balance grade G6.3 per ANSI S2.19
6. Fan wheel shall be manufactured with welded steel blades and coated with a minum of 2-4 mills of Permatector (Polyester Urethane), electrostatically applied and baked. Finish color to be grey.
7. Wheel inlet shall be carefully matched and shall have precise running tolerances for maximum performance and operating efficiency.
8. Fan motors shall meet or exceed EISA (Energy Independence and Security Act) efficiencies. Motors to be TEFC with 1.15 service factor.
9. Drive belts and sheaves shall be sized for 150% of the fan operating brake horsepower, and shall be readily and easily accessible for service, if required.
10. Fan shaft shall be turned and polished steel that is sized so the first critical speed is at least 25% over the maximum operating speed .
11. Bearings to be designed with low swivel torque to allows the outer race of the bearing to pivot or swivel within the cast billow block. Bearings shall be 100% tested for noise and vibration by the manufacturer. Bearings shall be 100% tested to insure the inner race diameter is withing tolerance to prevent vibration.
12. Bearings shall be selected for a basic rating fatigue life (L-10) of 80,000 hours at maximum operating speed for each pressure class.
13. Bearings shall be fixed to the fan shaft using concentric mounting locking collars, which reduce vibration, increase service life, and improve seriveabliity. Bearings that use set screws shall not be allowed.
14. Bearings shall have zerk fittings to allow for lubrication.

2.9 FANWALL TECHNOLOGYTM (FWT) ELECTRICAL SUPPLY AIR HANDLERS

A. Provide complete electrical and control system(s) required to run the FANWALL system(s) including all equipment, material, electrical enclosure, electrical components and electrical labor.

B. FANWALL Array designs shall be in accordance with specific system requirements. Please see system requirements before electrical design of FANWALL system is to commence.

C. FANWALL Array electrical designs shall be in accordance with the NEC, UL 508A, and Local Codes.

D. Motor Circuit Protection:

1. All motors in the FANWALL Array shall be provided with an individual Motor Protection for thermal overload protection. All motor starter (circuit) protectors shall be located in main enclosure(s) rated NEMA 1 Indoor or NEMA 3R Outdoor depending upon location. Electrical Enclosure(s) include Control Transformer, Lighting Transformer and will be Externally Mounted, Recess Mounted or Located Inside the Cabinet (where allowed) as required or as detailed on the plans.
2. Electrical enclosures must be factory-mounted and wired for a single point power connection

E. Input Line Filters:

1. As required by electrical design, when using variable frequency drives provide Input Line reactors with three percent (3%) impedance mounted externally if not already internal to variable frequency drive.

F. Output Filters:

1. As required by electrical design, when using variable frequency drives where distance and filtering is an issue, provide output line reactors as required. Size the output filter(s) accordingly to manufacturer's recommendations.

G. ~~Redundant~~ Variable Frequency Drive Control (VFD For Each Fan)

1. As required by system design, provide one Variable Frequency Drive ~~for normal operation and a second Variable Frequency Drive for 100% Redundant Backup operation~~ for each fan cell in the Fanwall. Provide control wiring and control circuitry to Alarm the panel and BMS upon VFD failure ~~transfer from main VFD to Redundant VFD when main drive has faulted. The Variable Frequency~~ Drives shall be sized accordingly to start and hold ~~all~~ each motor~~s~~ in the Fanwall. Provide short circuit protection for each drive through means of using fuses with fuse blocks or circuit breakers.
2. The Variable Frequency Drives shall be mounted in the air handler on the fan cell and be connect back to a single power source in a dedicated enclosure. ~~a dedicated enclosure for connection to single point power.~~ Variable Frequency Drive ~~enclosure~~ shall be provided with a main disconnecting means. Provide appropriate cooling of enclosure if required.
3. Motor circuit protectors shall be used for each motor in the Fanwall array. Motor circuit protectors shall be housed and mounted in the VFD enclosure as required. Motor circuit protectors may be mounted in a remote enclosure that is separate from VFD enclosure if design requires. Variable frequency drive enclosure and remote Motor circuit protector enclosure must be mounted at a minimal distance from fan array motors and each other.
4. Provide three phase power distribution wiring and control wiring as required. All three phase power components shall have a rating listed for Short Circuit Current Rating. Provide control wiring and components required for complete operation of fan wall system. System controls, controls components and control wiring shall include but is not limited to Auto mode or manual mode, CFM control mode, or BMS control mode. Controls and control wiring shall include auto start/stop, manual start stop, life safety shutdown, smoke shutdown, system alarms and VFD alarms. All control wiring shall be included in ~~VFD~~ enclosure provided with system.

2.10 ELECTRICAL for EXHAUST AIR HANDLERS

A. Provide complete electrical and control system(s) required to run the Exhaust Fans including all equipment, material, electrical enclosure, electrical components and electrical labor.

B. Electrical designs shall be in accordance with the NEC, UL 508A, and Local Codes.

C. Motor Circuit Protection:

1. All motors in the Exhaust shall be provided with an individual Motor Protection for thermal overload protection. All motor starter (circuit) protectors shall be located in main enclosure(s) rated NEMA 1 Indoor. Electrical Enclosure(s) include Control Transformer, Lighting Transformer and will be Externally Mounted, Recess Mounted or Located Inside the Cabinet (where allowed) as required or as detailed on the plans.
2. Electrical enclosures must be factory-mounted and wired for a single point power connection

D. Input Line Filters:

1. As required by electrical design, when using variable frequency drives provide Input Line reactors with three percent (3%) impedance mounted externally if not already internal to variable frequency drive.

E. Output Filters:

1. As required by electrical design, when using variable frequency drives where distance and filtering is an issue, provide output line reactors as required. Size the output filter(s) accordingly to manufacturer's recommendations.

F. Redundant Variable Frequency Drive Control:

1. As required by system design, provide one Variable Frequency Drive for normal operation and a second Variable Frequency Drive for 100% Redundant Backup operation. Provide control wiring and control circuitry to transfer from main VFD to Redundant VFD when main drive has faulted. The Variable Frequency Drives shall be sized accordingly to start and hold all motors in the Fanwall. Provide short circuit protection for each drive through means of using fuses with fuse blocks or circuit breakers.
2. The Variable Frequency Drives shall be mounted in a dedicated enclosure for connection to single point power. Variable Frequency Drive enclosure shall be provided with a main disconnecting means. Provide appropriate cooling of enclosure.
3. Motor circuit protectors shall be used for each motor in the Fanwall array. Motor circuit protectors shall be housed and mounted in the VFD enclosure as required. Motor circuit protectors may be mounted in a remote enclosure that is separate from VFD enclosure if design requires. Variable frequency drive enclosure and remote Motor circuit protector enclosure must be mounted at a minimal distance from fan array motors and each other.
4. Provide three phase power distribution wiring and control wiring as required. All three phase power components shall have a rating listed for Short Circuit Current Rating. Provide control wiring and components required for complete operation of fan wall system. System controls, controls components and control wiring shall include but is not limited to Auto mode or manual mode, CFM control mode, or BMS control mode. Controls and control wiring shall include auto start/stop, manual start stop, life safety shutdown, smoke shutdown, system alarms and VFD alarms. All control wiring shall be included in VFD enclosure provided with system.

2.11 VIBRATION TESTING

A. A Factory Balance test shall be performed on the fan assembly to certify that the fan meets the following vibration values:

Direct Drive - Spring Isolation Assembly

Rotational Speed	Vibration Amplitude Peak to Peak
Up to and including 2000 rpm	0.50 mils
2000 + rpm	0.25 mils

Vibration measurements shall be taken in three orthogonal directions: One taken parallel to shaft in the horizontal plane and two taken perpendicular to the shaft in the horizontal and vertical planes. The values will be checked with the levels being measured in mils peak to peak.

B. During balancing, the fan shall be imposed with an operating resistance equal to the design external static pressure.

C. A certificate of compliance signed by the manufacturers Quality Control Inspector shall be attached to each fan assembly at the factory and incorporated into the operating and maintenance manuals.

2.12 COILS

A. Chilled and Hot Water or indirect Coils shall have .008” aluminum fins rated in accordance with ARI 410 for water, steam or ethylene/propylene glycol water mixture. The tubes shall have a minimum .035 wall thickness of seamless copper expanded into the fin collars to provide a permanent mechanical bond. No metallic or thermal bonding materials are acceptable. Return Bends shall be a minimum of one tube thickness greater than the main tubes, brazed replaceable copper (or CuproNickel). “U” type shaped tubes is not acceptable. Coil headers shall be non-ferrous seamless copper (cast iron headers are not acceptable), and provided with brass or copper male pipe connections. Pipe connections shall be same end connections. Each Coils supply & return connections shall be raised / lowered a minimum 6” from the bottom / top of the coil to allow room for piping connection hookup especially between stacked coils, coils near floors & coils near roofs. Each coil shall be provided with capped vent & drain connections extended to the exterior of the cabinet. All coils shall be fully drainable with no trapped tubes. Coils shall

be counter flow design with connections either left or right hand as specified. The use of internal restrictive devices such as turbolater springs or ribbons to obtain turbulent is not acceptable.

B. Coil casings shall be minimum 16 gauge galvanized steel with formed flanges on all sides of the coil with the tube sheets having pressed or extruded tube holes. The coil casing shall be reinforced so that the maximum unsupported length is 60". The reinforcements shall be of the same material as the casing. Both ends of the coil to be sealed off from the main air stream by full height blankoff's on both the entering air and leaving air sides. Blankoff's to be the same material as the coil casing. Headers and return bends to be further insulated with a closed cell neoprene gasket the full height & width of the coil casing to reduce condensation.

C. All coils are tested and rated in accordance with the Air Conditioning and Refrigeration Institute (ARI) Standard 410 and certified in accordance with the ARI certification program. All tubes shall be tested at a minimum 1500 PSIG and all assemblies tested under water at 350 PSIG and rated for 250 PSIG working pressures. Individual tube and core tests before installation of header are not considered satisfactory. Hydrostatic tests alone will not be acceptable.

D. Stacked Coils to be mounted with integral stacking flanges on the coil.

E. Coil Supply & Return piping connections extending through the cabinet wall shall be sealed by caulking on the exterior of the casing.

2.13 PIPING

A. Condensate Drain Lines: Type L drawn-temper copper tubing with soldered joints. Pipe to the outside of the unit.

2.14 FILTERS

A. Filters shall be arranged for Face, Rear or side loading as indicated on the detail drawings. Face loading is preferred where space allows. Face or rear loading to be in gasketed Universal Holding Frames. The filter rack assemblies to blanked off to the sides, roof and floor and properly sealed to minimize filter bypass

B. Filter section shall be factory fabricated as an integral part of the air handling unit. Filters to be arranged for face (rear) loading into a gasketed Universal holding frame. Filters to be, UL Class 2. Provide (2) sets of filters.

C. Each filter bank to be provided with a Dwyer Series 2000 Magnehelic Air Filter Gauge. Gauges to be flush mounted. Provide with weatherproof enclosure for filter gauge(s) on outdoor units.

D. For Upstream Face-loaded Filters provide walk-in filter access sections upstream or downstream of the filter rack(s) with adequate space for filter service.

E. Filter banks to be sized for a maximum filter face velocity as scheduled.

F. See schedules on drawings for number and type of filters.

2.15 LIGHTS/CONTROL WIRING

A. Provide vapor proof, Compact Fluorescent, 23-watt light fixtures in each accessible section complete with a protective metal cage and sealed enclosure. Lights to be wired to a common Light Switch mounted in a junction box with Illuminated Switch; 120V GFCI Outlet and Weatherproof Cover. 120/1/60V power supplied and wired By Others.

B. All factory-wiring wiring to lights, switches and outlets shall be in conduit and internal to the unit. No external conduit runs for the lights are allowed.

C. Air handler manufacturer shall allow a minimum 1.5” clearance above the entire width of each interior bulk headers (coils, filters, fan blankoff, etc.). This will be to allow wiring of any 120V or 24V runs internally to the unit as required by the controls contractor, thus reducing the number penetrations of the exterior panels.

D. If the unit is split for shipping or rigging, then junction boxes shall be furnished at each section to allow the electrical contractor to make final connections in the field. Wiring to be clearly labeled at junction points to facilitate reconnection.

2.16 DAMPERS

A. Control Dampers:

Furnish and install, at locations shown on plans, or in accordance with schedules, Low Leak Dampers with published leakage data certified under the AMCA certified ratings program. Low Leak Dampers shall be rated less than 6.2 cfm per sq. ft. of area at 4-in. w.g. pressure difference through a 48” x 48” damper. Published leakage data shall include leakage information for all available damper sizes at pressure differences from 1 in w.g. through 13 in w.g. Standard Control Dampers shall be constructed of Formed Steel (extruded Aluminum) blades and casing provided with vinyl or rubber edge seals and stainless steel edge seals. (Low leak dampers shall be fabricated of minimum 5” x 1” x .125” 6063T5 extruded aluminum hat channel with hat mounting flanges on both sides of the frame. Blades shall be airfoil type extruded aluminum (maximum 6” depth) with integral structural reinforcing tube running the full length of each blade. Blade edge seals shall be extruded vinyl double edge design with inflatable pocket that enables air pressure from either direction to assist in blade to blade seal. Blades shall be mechanically locked in extruded blade slots, yet be easily replaceable in the field.) Adhesive or clip-on type blade seals are not acceptable. Bearings shall be non-corrosive molded synthetic. Axles shall be square or hexagonal (round is not acceptable) to provide positive locking connection to blades and linkage. Linkage shall be concealed in the frame.

2.17 VARIABLE FREQUENCY DRIVES

A. The RTU manufacturer shall provide, mount and wire in the supply fan one VFD per fan and on the exhaust fans a Primary and a Redundant Variable Frequency Drive "VFD" to each fan motor. Each VFD is to have a Nema 1 enclosure with a fused disconnect device. A keypad and LED/LCD display shall be integral to each VFD for programming and troubleshooting. Each VFD shall be certified and rated for operation in a temperature range of -10ºC to 50ºC and a RH range of 5% to 95% non-condensing. Each VFD shall be certified for operation at the jobsite altitude (show de-rating value in submittal). The VFD shall be capable of starting into a rotating load (forward or reverse) and shall smoothly accelerate or decelerate to the set point without experiencing component damage or causing a fault. Each VFD shall be provided with a DC link choke, a 5% line reactor and a harmonic filter if necessary to guarantee a total harmonic distortion of less than 5%. The VFD manufacturer shall provide certified calculations to prove the 5% or less distortion, upon request by the engineer.

B. For applications where the VFD is to be operating at various, but constant speeds, the RTU supplier must coordinate with the VFD manufacturer and motor manufacturer to determine if there is a need for the motor to be provided with either insulating bearings or a shaft grounding system to prevent pitting of the bearings due to electrical discharge. For such applications, if neither of the above is provide, the RTU manufacturer must warrant the motor against bearing failure (including labor for removal and replacement) for a minimum period of 5 years from date of start-up.

C. Each VFD must be started and set-up by a factory authorized service technician employed by a factory certified organization. A start-up report, complete with all initial program parameter, must be included in the O&M manuals that are provided by the contractor.

D. Provide on the fly starting capability for each VFD.

E. Approved VFD Manufacturers:
   1. ABB
   2. Danfoss Graham
   3. Saftronics –Emerson Electric

4. Yaskawa
5. Cerus Industrial

2.18 SOUND POWERS LEVELS

A. The Sound Power levels at the air handling unit supply air discharge, return air intake, and casing radiated shall not exceed the values shown on the schedule when the unit is operating at maximum design airflow and Total Static Pressure.

B. It shall be the option of the contractor to provide a quieter fan, acoustical lining, sound traps or other sound attenuating devices within the air handling unit(s) to supplement the alternate design in order to meet the specified levels above. Contractor is responsible for all costs associated with the supply and installation of larger fan(s), motor(s) or electrical service(s) to overcome increased component and/or system effect static pressures. The use of external sound treatment is not acceptable.

C. The air handling units sound power data shall be submitted for approval. The submittal shall include a complete description of the methods and procedures used to develop the sound power levels being submitted.

2.19 CLEANING AND WRAPPING FOR SHIPMENT

A. Unit shall be cleaned swept & vacuumed clean.

B. Cleaned unit shall be shipped on an open flat bed truck with all openings covered.

2.20 DELIVERY, STORAGE & HANDLING

A. Unit shall ship with all openings securely covered with wood and / or nylon reinforced plastic wrap and to be watertight. Each unit (will be covered by a tarp) and securely strapped down on an open flatbed truck.

B. Units must be stored in a clean dry area and protected from the weather and construction traffic. Carefully follow manufacturers' storage instructions if installation does not immediately follow arrival at the job site.

C. Follow manufacturers rigging guidelines for movement and installation of equipment.

2.21 WARRANTY

A. Unit manufacturer to warrant it's product to be free of defects in materials and workmanship under normal use when installed and operated in accordance with factory recommendations for a period of 18 months from date of shipment or 12 months after initial equipment start-up, which ever occurs first. Equipment found to be defective should be replaced or repaired to include all parts and labor. Component parts that require periodic replacement due to normal wear such as filters, fan belts, etc. are not covered by the warranty.

2.22 STEAM HUMIDIFIERS

A. Furnish and install where indicated on the drawings packaged steam injection type humidifier panel(s).

B. Each Manifold panel shall consist of a steam supply header/separator, a condensate collection header, and a bank of closley spaced steam dispersion tubes spanning the distance between the two headers. Each tube shall be fitted with steam discharge tubelets inserted into the tube wall. These tubelets shall be made of a material designed for steam temperatures. Each tubelet shall contain a steam orifice sized for its required steam capacity.

C. Each packaged humidifier panel assembly of tubes and headers shall be contained within a galvanized metal casing to allow convenient duct mounting or to facilitate the stacking of and/or the end to end mounting of multiple Manifold panels in ducts or air handler casings.

D. All tubes and headers shall be of 304 stainless steel and joints shall be heli-arc welded. Tubes shall be jointed to headers with slip or threaded fit couplers or they can be welded.

E. The humidifier shall be furnished with appropriate steam valve, steam strainer and steam traps (when used), all shipped loose for installation on the job. The humidifier and piping shall not rise the temperature in the air stream more than 2 degrees F.

F. Approved manufacturers: Nortec, Dri-Steam, Armstrong, Pure Steam, Vapac.

2.23 DIRECT EVAPORATIVE COOLER

A. Evaporative coolers shall be of heavy-duty construction, and be designed for industrial application. Evaporative media is fabricated from large glass fibers impregnated with insoluble rigidifying saturants in a cross-fluted design. Cooler shall be of a self-cleaning design. Media shall meet or exceed the required capacity and be at least as thick as listed on the mechanical equipment schedule. Cooler housing shall be constructed of 16 gauge 304 stainless steel. Sump shall be constructed from 10 gauge 304 stainless steel welded watertight at the corners. Dual distribution header shall be provided for media depths that exceed 12 inches. The distribution header shall be fabricated from PVC pipe. The distribution supply piping and flush out line piping shall be PVC. Make-up line and level controls shall consist of a brass float valve, copper float, steel drain and overflow connections, water makeup, and fast fill connection. The copper bleed line shall be furnished with an adjustable ball valve. Coolers shall be furnished with a submersible pump.

PART 3 - EXECUTION

3.1 EXAMINATION

A. Examine areas and conditions to receive equipment, for compliance with installation tolerances and other conditions affecting performance of central-station air-handling units.

B. Examine roughing-in of steam, hydronic, condensate drainage piping, and electrical to verify actual locations of connections before installation.

C. Do not proceed with installation until unsatisfactory conditions have been corrected.

3.2 INSTALLATION

A. Install custom air-handling units level and plumb, according to manufacturer's written instructions.

1. Floor-Mounted Units: Support on concrete housekeeping curbs using neoprene pads. Secure units to anchor bolts.

B. Arrange installation of units to provide access space around air-handling units for service and maintenance.

3.3 CONNECTIONS

A. Piping installation requirements are specified in other Division 23 Sections. The Drawings indicate the general arrangement of piping, fittings, and specialties. The following are specific connection requirements:

1. Install piping adjacent to machine to allow service and maintenance.
2. Connection piping to air-handling units with flexible connectors.

3. Connect condensate drain pans using 1-1/4-inch NPS, Type M copper tubing. Extend to nearest equipment or floor drain. Construct deep trap at connection to drain pan and install cleanouts at changes in direction.
4. Hot- and Chilled-Water Piping: Conform to applicable requirements of Division 23 Section "Hydronic Piping." Connect to supply and return coil tappings with shutoff or balancing valve and union or flange at each connection.

B. Duct installation and connection requirements are specified in other Division 23 Sections. The Drawings indicate the general arrangement of ducts and duct accessories. Make final duct connections with flexible connections.

C. Electrical: Conform to applicable requirements of Division 23 Sections.

1. Connect fan motors to wiring systems and to ground. Tighten electrical connectors and terminals according to manufacturer's published torque-tightening values. Where manufacturer's torque values are not indicated, use those specified in UL 486A and UL 486B.
2. Temperature control wiring and interlock wiring is specified in Division 23.

3.4 ADJUSTING

A. Adjust damper linkages for proper damper operation.

3.5 CLEANING

A. After completing installation, inspect exposed finish. Remove burrs, dirt, and construction debris, and repair damaged finishes including chips, scratches, and abrasions.

B. Clean fan interiors to remove foreign material and construction dirt and dust. Vacuum clean fan wheels, cabinets, and coils entering air face.

3.6 COMMISSIONING

A. Manufacturer's Field Inspection: Engage a factory-authorized service representative to perform the following:

1. Inspect field assembly of components and installation of central-station air-handling units including piping, ductwork, and electrical connections.
2. Prepare a written report on findings and recommended corrective actions.

B. Final Checks before Startup: Perform the following before startup:

1. Verify that shipping, blocking, and bracing are removed.
2. Verify that unit is secure on mountings and supporting devices and that connections for piping, ductwork, and electrical are complete. Verify that proper thermal overload protection is installed in motors, starters, and disconnects.
3. Perform cleaning and adjusting specified in this Section.
4. Disconnect fan drive from motor, verify proper motor rotation direction, and verify free fan wheel rotation and smooth bearings operations. Reconnect fan drive system, align belts, and install belt guards.
5. Lubricate bearings, pulleys, belts, and other moving parts with factory-recommended lubricants.
6. Set outside-air and return-air mixing dampers to minimum outside-air setting.
7. Comb coil fins for parallel orientation.
8. Install clean filters.
9. Verify that manual and automatic volume control, and fire and smoke dampers in connected ductwork systems are in fully open position.

C. Starting procedures for central-station air-handling units include the following:

1. Energize motor; verify proper operation of motor, drive system, and fan wheel. Adjust fan to indicated rpm. Replace fan and motor pulleys as required to achieve design conditions.
2. Measure and record motor electrical values for voltage and amperage.
3. Manually operate dampers from fully closed to fully open position and record fan performance.

D. Refer to Division 23 Section "Testing, Adjusting, and Balancing" for air-handling system testing, adjusting, and balancing.

3.7 DEMONSTRATION

A. Engage the services of a factory-authorized service representative to train Owner's maintenance personnel on procedures and schedules related to startup and shutdown, troubleshooting, servicing, and preventive maintenance.

1. Review data in the operation and maintenance manuals. Refer to Division 1 Section "Contract Closeout."
2. Schedule training with Owner, through Architect, with at least 7 days' advance notice.

END OF SECTION 237326

THIS PAGE INTENTIONALLY BLANK

SECTION 23 82 43 – RADIANT PANELS

PART 1 – GENERAL

1.1 Summary

A. This section includes the following:

1. Radiant Panels

1.2 Related Documents

A. 230550 – Operation and Maintenance of HVAC Systems

B. 230500 – Common Work Results for HVAC

C. 230900 – Instrumentation and Control for HVAC

D. 232113 – HVAC Piping

1.3 Submittals

A. Product Data: For each type of product indicated, include rated capacities, furnished specialties, and accessories.

B. Shop Drawings: Detail equipment assemblies and indicated dimensions, required clearances, method of field assembly, components, and locations and size of each field connection.

1. Include a schedule showing unique model designation, room location, model number, size, and accessories furnished.

2. Wiring Diagrams: Power, signal, and control wiring.

C. Coordination Drawings: Reflected ceiling plans, drawn to scale, on which the following items are shown and coordinated with each other, based on input from installers of the items involved:

1. Ceiling suspension assembly members.

2. Method of attaching hangers to building structure.

3. Size & location of initial access modules for acoustical tile.

4 Ceiling-mounted items including lighting fixtures, diffusers, grilles, speakers, sprinklers, access panels, and special moldings.

D. Operation and Maintenance Data: For radiant panels, to be included in emergency, operation and maintenance manuals.

1.4 Quality Assurance

A. Product Options: Drawings indicating size, profiles, and dimensional requirements of radiant panels and are based on the specific system indicated.

B. Electrical Components, Devices and Accessories: Listed and labeled as defined in NFPA 70, Article 100, by a testing agency acceptable to authorities having jurisdiction, and marked for intended use.

C. Radiant panels and accessories shall be rated and tested for pressure as shown on the drawings.

1.5 Coordination

A. Coordinate layout and installation of radiant panels and suspension system with other construction that penetrates ceilings or is supported by them, including light fixtures, HVAC equipment, fire-suppression system, and partition assemblies.

PART 2 – PRODUCTS

2.1 Manufacturers

A. In Part 2 articles where titles below introduce lists, the following requirements apply to selection:

1. Manufacturers: Subject to compliance with requirements, provide products by one of the manufacturers specified.

2.2 Modular Radiant Panels

A. Approved Manufacturers:

1. Price

2. Aerotech Manufacturing

3. Alternates: Alternates or approved equals are acceptable if and only if a mock-up and witness test is performed to demonstrate that the substitution meets design criteria.

B. Modular radiant panels shall use heat sinks on the back of a rigid ceiling tile to transfer heat between copper tubes and the panel face. The modular radiant panels are to radiate or absorb heat from or to the zone below.

C. Water Tubes: Tubes shall consist of ASTM B75 ½" nominal copper tubing. Water connections shall be one end only. Water connections shall be suitable for solder, compression fittings, push-on fittings or threaded connection.

D. Heat Sinks: Heat sinks shall be extruded aluminum and copper pipe will be mechanically fastened to the heat sink. A non-hardening heat transfer paste is required between the tubing and the heat sink and between the heat sink and the panel.

E. Face: The panel face shall be constructed of 18 or 14 ga. aluminum

F. Paint Finish: All visible components shall be powder-coated with highly emissive powder coat polyester paint for optimal radiative properties as well as durability and easy cleaning. Manufacturer shall provide water pressure drop data as well as heat and cool output data derived from tests in accordance with DIN 14037 (heating) and DIN 14240 (cooling).

G. Standard Color Protech PX622W457.

H. Modular radiant panel capacity shall be tested and certified by manufacturer in accordance with DIN 14037 (heating) and DIN 14240 (cooling) to meet the performance listed on the schedule. Should any performance rating, chilled water supply temperature, water pressure drop, etc. deviate from the schedule, manufacturer shall submit updated capacity as described in Section 1.3, as well as computational fluid dynamic modeling demonstrating that any changes do not impact the air distribution in a room that would cause a detriment to the PMV and ADPI rating from the design conditions. Manufacturer shall have factory testing facility available to perform performance test of units in accordance with said standard, as required. Upon request, up to 1% of units for the project can be tested in accordance with the standard. Request will be made with order and prior to shipment of chilled sails. Engineer will have the option of witnessing this test.

I. Water connections shall be shipped sealed to limit the introduction of dust and dirt during shipping and construction.

J. Accessories:

1. Manufacturer shall supply upon request 12"/18" stainless steel braided hose with isolation ball valves as required.

2.3 Linear Radiant Panels

A. Approved Manufacturers:

1. Price

2. Alternates: Alternates or approved equals are acceptable if and only if a mock-up and witness test is performed to demonstrate that the substitution meets designcriteria.

B. Linear radiant panels shall use extruded aluminum with integrated heat sinks on the back to transfer heat between copper tubes and the panel face. The linear radiant panel is to radiate or absorb heat from or to the zone below.

C. Water Tubes: Tubes shall consist of ASTM B75 ½" nominal copper tubing. Water connections shall be one end only. Water connections shall be suitable for solder, compression fittings, push-on fittings or threaded connection.

D. Heat Sinks: Heat sinks shall be extruded aluminum and copper pipe will be mechanically fastened to the heat sink. A non-hardening heat transfer paste is required between the tubing and the heat sink.

E. Extruded Aluminum Plank: The panel shall be constructed of 1.2 mm thick extruded aluminum

F. Paint Finish: All visible components shall be powder-coated with highly emissive powder coat polyester paint for optimal radiative properties as well as durability and easy cleaning. Manufacturer shall provide water pressure drop data as well as heat and cool output data derived from tests in accordance with DIN 14037 (heating) and DIN 14240 (cooling).

G. Standard Color Protech PX622W457.

H. Linear radiant panel capacity shall be tested and certified by manufacturer in accordance with DIN 14037 (heating) and DIN 14240 (cooling) to meet the performance listed on the schedule. Should any performance rating, chilled water supply temperature, water pressure drop, etc. deviate from the schedule, manufacturer shall submit updated capacity as described in Section 1.3, as well as computational fluid dynamic modeling demonstrating that any changes do not impact the air distribution in a room that would cause a detriment to the PMV and ADPI rating from the design conditions. Manufacturer shall have factory testing facility available to perform performance test of units in accordance with said standard, as required. Upon request, up to 1% of units for the project can be tested in accordance with the standard. Request will be made with order and prior to shipment of chilled sails. Engineer will have the option of witnessing this test.

I. Water connections shall be shipped sealed to limit the introduction of dust and dirt during shipping and construction.

J. Accessories:

1. Manufacturer shall supply upon request 12"/18" stainless steel braided hose with isolation ball valves as required.

2.4 Source Quality Control

A. Identification: Label each radiant panel with appropriate tag number.

B. Verification of Performance: Rate radiant panels in accordance with DIN 14037 for heating or DIN 14240 for cooling.

PART 3 – EXECUTION

3.1 Pre-Design Services

A. Bid shall include the costs to complete final selections and coordination with the Engineer at the Engineers office. Allow for a minimum of three (3) days.

3.2 Installation – General

A. Install radiant panel level and plumb. Maintain sufficient clearance for normal services, maintenance, or in accordance with construction drawings.

B. Provide R-13 Batt insulation on top of radiant panels for entire length and width of panel.

C. Complete installation and startup checks according to manufacturer's written instructions and perform the following:

1. Verify that controls and control enclosure are accessible.

2. Verify that control connections are complete to control valves as needed.

3. Verify that any identification tags are visible.

4. Verify that controls respond to inputs as specified.

3.3 Connections

A. Piping installation requirements are specified in other Division 23 Sections. Drawings indicated general arrangement of piping, fittings, and specialties.

B. Install piping adjacent to radiant panels to allow for service and maintenance.

C. In addition to Division 23 Section "Hydronic Piping", connect copper tubing to supply with shut-off valve, strainer, control valve, and union or flange, and to return with balancing valve and union or flange.

D. Connect wiring according to Division 26 Section "Low-Voltage Electrical Power Conductors and Cables".

E. Tighten electrical connectors and terminals according to manufacturer's published torque-tightening.

3.4 Field Quality Control

A. Perform the following field tests and inspections and prepare test reports:

1. Leak Test: After installation, fill water tubes and test for leaks. Repair leaks and retest until no leaks exist.

2. Operational Test: After electrical circuitry has been energized, start units to conform to proper unit operation.

3. Test and adjust controls and safeties. Replace damaged and malfunctioning controls and equipment.

B. Manufacturer's Field Service: Engage a factory-authorized service representative to inspect, test, and adjust field-assembled components and equipment installation, including connections, and to assist in field testing. Report any findings in writing.

C. Remove and replace malfunctioning units and retest as specified above.

3.5 Cleaning and Protection

A. Clean all visible surfaces of equipment; touch up as required.

B. Protect all units before, during and after installation. Damaged materials due to improper protection shall be cause for rejection.

3.6 Construction Phase Services

A. Installer shall visit the radiant panel factory, or factory-authorized representative, prior to the arrival of the product on site, to become familiar with the panels. Manufacturer shall include the cost of such a visit for one (1) installer in the bid.

B. Manufacturer or factory-authorized representative shall visit the site regularly during the installation process to ensure proper means and methods are being employed. Bid shall include the cost of a minimum of two (2) such visits.

C. Manufacturer or factory-authorized representative shall provide start-up and training services to owners/staff to adjust, operate, and maintain radiant panels. Refer to Division 01 Section “Demonstration and Training”. A minimum of eight (8) hours of such services shall be included in bid.

ELECTRICAL ADDENDEUM

Unified State Laboratory Module 2 May 21, 2015
Addendum #3

ELECTRICAL – DIV 26, 27, 28

GENERAL

UNIT PRICE BID FORM

1. The Electrical Unit Price Bid Form is attached to this addendum, and shall be completed and returned to the Architect/Engineer from the apparent successful bidder within 48 hours of bid opening.

MANDATORY LIGHTING PRE-SUBMITTAL MEETING

1. Once lighting supplier has been selected, schedule a mandatory lighting pre-submittal meeting with Spectrum Engineers to review lighting fixtures and controls for the building. This meeting to happen before Spectrum will review any submittals concerning lighting and lighting controls.

X-RAY PRELIMINARY SHOP DRAWINGS FOR CONTRACTORS REFERENCE

1. The layout of the X-Ray exam room was completed based on preliminary shop drawings provided by the manufacturer. These shop drawings have been attached for the contractor's reference for understanding of the systems complexity, equipment connections, and necessary coordination. Electrical installer shall coordinate with the actual X-Ray equipment manufacturer for this project and provide all electrical rough-in, wiring, equipment and connections as required by the actual shop drawings for this project.

SPECIFICATIONS

Section 262416 Panelboards:

1. Add Paragraph 2.3 Instrumentation as indicated:

2.3 INSTRUMENTATION

1. Multifunction Digital-Metering Monitor: Microprocessor-based unit suitable for three- or four-wire systems and with the following features:

    a. Switch-selectable digital display of the following values with maximum accuracy tolerances as indicated:
    b. Phase Currents, Each Phase: Plus or minus 1 percent.
    c. Phase-to-Phase Voltages, Three Phase: Plus or minus 1 percent.
    d. Phase-to-Neutral Voltages, Three Phase: Plus or minus 1 percent.
    e. Kilowatts: Plus or minus 2 percent.
    f. Kilovolt-amps: Plus or minus 2 percent.
    g. Peak Kilowatts: Plus or minus 2 percent.
    h. Peak Kilovolt-amps: Plus or minus 2 percent.
    i. Total Harmonic Distortion: current and voltage.
    j. Ethernet card for connection to central utility management system.
    k. RS-485 communication port.

2. Mounting: Display and control unit flush or semiflush mounted in instrument compartment door.

DRAWINGS

ELECTRICAL ADDENDEUM

Unified State Laboratory Module 2 May 21, 2015
Addendum #3

Sheet ES102:

1. Site light pole revisions near existing parking lot.

Sheets EP101b, EP101d, EP102a, EP102b, EP103a, EP103b, EP104:

1. Various power plan changes – see clouded revisions.

Sheet EP601:

1. The following panels and Fault Current Ratings have been added to the Fault Current Table:
    a. 1HDPB – 41,392 AIC
    b. 1LDPB – 15,945 AIC
    c. 1MCCQ2 – 18,535 AIC

2. Panel LM1 is an existing panel and has been removed from the Fault Current Table.

Sheet EP602:

1. Increased generator size.
2. Added feeder from 1CHDPB to Central Plant.

Sheet EP605:

1. Added feeder and disconnect from Module 2.

Sheet EP608:

1. Added meter load study for ATS-Q.
2. Clarified new breaker to be solid state LSI.

Sheets EL101a, EL101b, EL101c, EL102a, EL102b, EL103a, EL103b:

1. Various lighting and lighting control changes. Refer to clouded changes.

Sheet EL501 – EL505:

Various Lighting Control changes: Refer to clouded changes

Sheet EL601 & EL602:

1. General Changes
    a. Changed the operating voltage rating of all fixtures to UNV.
2. In CM fixture characteristic, added the text "Wired for uniform multilevel switch within each fixture. Lumens per 4' module"
3. For CM-32H, and CM-32PH, added the following to the description: Multiple Ballasts.
4. For CM-34H, and CM-34PH, added the following to the description: Multiple Ballasts..
5. For CM-38H, and CM-38PH, added the following to the description: Multiple Ballasts.
6. Edited DX-2 fixture as indicated on sheet.
7. Added DX-5 fixture to fixture schedule as indicated.
8. For G-4, added the following to the description: 2 ballasts for dual-level control.
9. Separated GF-98, and GS-4 fixture marks.
10. Added description for GS fixtures as indicated on drawings.

11. For HF-1, added the following to the description: (2) – 4 Lamp Ballasts.
12. Added HG-2 fixture to fixture schedule as indicated.
13. Added approved manufacturers and catalog numbers for LED-1 fixtures.
14. Added ETC as an approved manufacturer for fixture type OF-1.
15. Modified CCT of OG, OJ, and OL fixtures to be 4000K.
16. Added contractor allowance of $550.00 each for TX-1 fixture.
17. See UC fixtures for additional fixture types, description, and manufacturers.
18. Changed V-3 description to read: ***1***x4 Surface Mount. Also updated catalog numbers accordingly.
19. Added ZX-1D fixture to schedule.
20. All other changes as indicated on fixture schedules.

END OF ELECTRICAL ADDENDUM

Attachments:

Division 26 Unit Price Bid Form (5 pages)

Lodox X-ray Room Preliminary Shop Drawings Layout – For Reference (49 pages)

Full-Size Drawing Sheets – (26 pages)

DIVISION 26, 27, 28 - ELECTRICAL UNIT PRICE BID FORM

UNIT PRICES

1. **Lighting fixtures**

   a. **Lighting fixtures:** Guarantee unit prices for each item listed. Change order (add or deduct) amounts for lighting fixtures (excluding lamps, sales tax, and installation) shall be the prices listed below multiplied by the quantities added or deducted.

Type	Manufacturer	Unit Price
CM-12		
CM-12P		
CM-14		
CM-18		
CM-18P		
CM-32		
CM-32H		
CM-32P		
CM-32PH		
CM-34		
CM-34H		
CM-34P		
CM-34PH		
CM-38		
CM-38H		
CM-38P		
CM-38PH		
DX-1		
DX-2		
DX-3		
DX-4		
DX-5		
E		
E1-1		
E1-2		
ET		
FL-1		
G-2		
G-2F		
G-4		
G-4F		
GF-97		
GF-98		
GF-99		
GS-4		
HF-1		
HG-1		
HG-2		

UNIFIED STATE LAB MODULE 2
DIVISION 26 UNIT PRICE BID FORM

Type	Manufacturer	Unit Price
LED-1		
OC-32		
OF-1		
OG-1		
OJ-1		
OL-1		
SA-1		
TX-1		
UC-2,		
UC-2C		
UC-3		
UC-3C		
UC-4		
UC-4C		
V-1		
V-2		
V-3		
WB-2		
WB-4		
WB-8		
WB-10		
ZX-1		
ZX-2		

b. **Lighting fixture installation:** Guarantee unit prices for each item listed. Change order (add or deduct) amounts for installation of lighting fixtures (excluding fixtures, lamps, and sales tax) and including 30' of typical branch wiring shall be the prices listed below multiplied by the quantities added or deducted.

Type	Manufacturer	Unit Price
CM-12		
CM-12P		
CM-14		
CM-18		
CM-18P		
CM-32		
CM-32H		
CM-32P		
CM-32PH		
CM-34		
CM-34H		
CM-34P		
CM-34PH		
CM-38		
CM-38H		
CM-38P		
CM-38PH		

UNIFIED STATE LAB MODULE 2
DIVISION 26 UNIT PRICE BID FORM

Type	Manufacturer	Unit Price
DX-1		
DX-2		
DX-3		
DX-4		
DX-5		
E		
E1-1		
E1-2		
ET		
FL-1		
G-2		
G-2F		
G-4		
G-4F		
GF-97		
GF-98		
GF-99		
GS-4		
HF-1		
HG-1		
HG-2		
LED-1		
OC-32		
OF-1		
OG-1		
OJ-1		
OL-1		
SA-1		
TX-1		
UC-2,		
UC-2C		
UC-3		
UC-3C		
UC-4		
UC-4C		
V-1		
V-2		
V-3		
WB-2		
WB-4		
WB-8		
WB-10		
ZX-1		
ZX-2		

2. **Devices:** Guarantee unit prices for each item listed. Change order (add or deduct) amounts for complete installation shall be the prices listed below multiplied by the quantities added or deducted. Unit price shall include material and labor for complete installation of wiring devices.

   Include 50' of branch wiring or cabling (as applicable) with the following:

Wiring Device	Unit Price
Networked photocell	_____
Networked occupancy sensor	_____
Networked 2 button station	_____
Networked 3 button station	_____
4 circuit room controller panel	_____
Three-way switch	_____
Four-way switch	_____
Dual Service Floor box (FB-1)	_____
GFCI outlet(NEAM 5-20R)	_____
Weatherproof outlet(NEAM 5-20R)	_____
Outlet (NEAM 5-20R)	_____
Intercom Ceiling Speaker	_____
Voice/Data outlet with cabling	_____
Typ Voice/Data outlet with cabling	
Smoke Detector	_____
Duct Detector	_____
Horn/Strobe	_____
Control Module	_____
Monitor Module	_____
Smoke Damper Connection	_____

3. Provide unit prices for the following:

3/4" CND, with 4 #14THWN	_____	Lf
3/4" CND, with 4 #12THWN	_____	Lf
3/4" CND, with 4 #10THWN	_____	Lf
1" CND, with 4 #8 THWN	_____	Lf
1.25" CND, with 4 #6 THWN	_____	Lf
3/4" CND	_____	Lf

4. Electrician billing rates per hour:

Superintendent	_____
Journeyman	_____
3rd year apprentice	_____
2nd year apprentice	_____
1st year apprentice	_____

Equipment & Data Services Sheet ***Equipment No:*** **ME25**

Please complete this "Equipment Data Sheet" for each piece of new or existing equipment anticipated in the new facility attaching the manufacturer's equipment and specifications sheets if available.

Laboratory Unit: **AUTOPSY / MORGUE**

Equipment Data

EQUIPMENT ITEM:	**X-RAY MACHINE (FUTURE)**			
MFR./MODEL No.:	**Lodox / Statscan VE1**			
FURNISHED BY:	General Contractor:		Owner or Laboratory:	√
INSTALLED BY:	General Contractor:		Owner or Laboratory:	√
SIZE/WEIGHT:	Size (w x d x h):		Weight (lbs. or kg):	**Approx. 3,000 lbs.**
MOUNTING:	Countertop Mounted:		Floor Mounted:	
	Ceiling Mounted:		Other Requirements:	

Equipment Services: (to be verified by project engineer)

ELECTRICAL:	Voltage (V):	**208 & 480**	Amperage (A):	**???**
			Phase (P):	**3**
	Emergency Power ?:	**No**	UPS?:	**No**
	Dedicated Circuit ?:	**Yes**	Special Plug:	**NA**
	Plug -in ?	**No**	Direct wired ?:	**Yes**
			Other Requirements:	
HVAC:	Special Exhaust (Size):	**NA**	Special Exhaust (CFM):	**NA**
	Temperature Limits:		Humidity Limits:	
	Heat Output (BTUs):		Other Requirements:	

PLUMBING: **This equipment does not require plumbing services.**

OTHER DATA:

lodox®
critical imaging technology

LODOX STATSCAN VE

INSTALLATION
PLANNING GUIDE
AND
SITE SURVEY FORM

Document no : FRM-02-0004
Revision no: A

Copyright © 2008 by Lodox Systems (Pty) Ltd
All rights reserved. No part of this document may be reproduced, translated, stored in a retrieval system, or transmitted, in any form or by any means, electronic, mechanical, photocopying, recording or otherwise, without prior written permission of the owner.

CE
0120

Table of Contents

1 SCOPE 4

1.1 INTRODUCTION 4
1.2 PURPOSE 4
1.3 APPLICABILITY 4

2 APPLICABLE DOCUMENTS AND REFERENCES 5

2.1 APPLICABLE DOCUMENTS 5

3 ACRONYMS AND ABBREVIATIONS 6

4 INTRODUCTION 7

5 GENERAL 8

5.1 SAFETY 8
5.2 RADIATION PROTECTION 8

6 PRE-INSTALLATION LOGISTICS 9

6.1 CUSTOMER DETAILS 9
6.2 INSTALLATION DATE AND PERIOD 9

7 SITE SURVEY 10

7.1 PARKING AND OFFLOADING AREA 10
7.2 ACCESS AND TRANSPORT ROUTES 11
7.3 INSTALLATION SITE DIMENSIONS 12
7.4 UNIT WEIGHT 13

8 ELECTRICAL REQUIREMENTS 14

8.1 POWER REQUIREMENTS 14
8.2 RECOMMENDED CABLE SPECIFICATIONS 15
8.3 ELECTRICAL SITE SURVEY 16
8.4 AMBIENT ENVIRONMENT 17

McClaren, Wilson & Lawrie, Inc.
Laboratory Design Consultants © 2013
In Association with CRSA

8.5 NETWORK INTERFACE 18

9 X-RAYS WARNINGS AND INTERLOCKS 23

9.1 EXTERNAL RADIATION WARNING LIGHT 23
9.2 DOOR CONTACT 24

10 DECLARATION 25

11 CHANGE HISTORY 26

12 APPENDICES 27

12.1 APPENDIX A - LODOX® STATSCAN® FLOOR LOADING DETAIL 27
12.2 PHYSICAL DIMENSIONS OF STATSCAN VE 1 28
12.3 OPERATOR CONSOLEDIMENSIONS (LARGE VERSION) 29
12.4 OPERATOR CONSOLEDIMENSIONS (NARROW VERSION) 30
12.5 SUGGESTED ROOM LAYOUTS 31

1 Scope

1.1 Introduction

The Lodox® Statscan® is a low-dose medical x-ray machine for use in a hospital or medical centre trauma environment. It consists of a scanner and detection unit, operator console, patient trolley(s) and diagnostic viewing station(s). These are integrated with an x-ray tube and high voltage generator on site.

Before a Lodox® Statscan® can be installed on a site; there are some preparation activities and guidelines that must be followed. This document aims to describe those requirements, taking into account all the information gained thus far at the sites were Lodox® Statscan® machines have been installed.

1.2 Purpose

The purpose of this document is to provide installation and operational environmental requirements for the Lodox® Statscan®.

It also serves as a base for a systematic evaluation of the potential installation site and the relevant services offered by that site. This is to ensure that the installation of the Lodox® Statscan® will be done according to preset standards at a location, where all the services and factors that potentially influences an installation and operation of the Statscan®, have been documented and evaluated.

1.3 Applicability

This document is applicable to the Lodox® Statscan® which includes the high voltage generator.

2 Applicable Documents and References

2.1 Applicable Documents

References

- FRM-13-0101 LODOX® Isodose Plotter form
- WI-02-0001 Onsite Assembler work instruction
- CL-02-0001 S1-S5 Site Commissioning checklist
- MAN-13-0002 LODOX® Statscan® User Manual
- MAN-13-0003 DVS User Manual
- MAN-13-007 Lodox® Statscan® Scatter Reduction Measurement Manual

Schematics

- See Appendix LODOX® Statscan® Floor Loading Detail
- ASP-100-150-B Physical Dimensions of the Statscan® ASP module.
- HSG-150-151-A Physical Dimensions of the Statscan® Large OC module.
- HSG-190-166-1 Physical Dimensions of the Statscan® Small OC module

Links to the drawings below on the Lodox network are:

ASP100-150	\\Catscan\departments\Pdm\Data Vault\Mechanical Drawings\ASP209-150.pdf
HSG150-151	\\Catscan\departments\PDM\Data Vault\Mechanical Drawings\HSG150-151.pdf
HSG190-166	\\Catscan\departments\PDM\Data Vault\Mechanical Drawings\HSG190-166.pdf
STS101-166	\\Catscan\departments\PDM\Data Vault\Mechanical Drawings\STS101-166.pdf
STS102-166	\\Catscan\departments\Pdm\Data Vault\Mechanical Drawings\STS102-166

3 Acronyms and Abbreviations

ASP	Arm Scanning and Positioning System
DVS	Digital Viewing Station
HVG	High Voltage Generator
N	Neutral
OC	Operator Console
PE	Protective Earth
UPS	Uninterruptible Power Supply
Hospital Representative	A person that has the authority to make decisions on behalf of the hospital management, administration and/or technical department

:

4 Introduction

This document covers instructions and guidelines for the pre-installation preparation performed by the necessary contractors and checks performed by the Lodox® Statscan® installation engineer together with the customer representative. Correct use of this form will ensure that the system will be installed according to certain preset standards at a location that meets the specific requirements necessary to ensure a smooth installation and problem-free operation.

This document highlights the following areas for evaluation:

- Pre-installation logistics
  - Installation date and period
  - Parking and offloading area
- Site survey
  - Access and transport routes
  - Installation site dimensions
  - Power supply
  - External radiation warning light
  - External door contact
  - Network interface
  - Ambient environment
- **Please record all your measurements in the far right columns of the relevant tables.**

This document should be completed in the presence of a customer representative at least two weeks before the installation commences. After completing this document, the declaration at the back is to be signed by the Lodox Systems representative and the customer representative. Return a completed copy to:

Training, Service and Maintenance

Lodox Systems

P.O. Box 651807

Benmore

South-Africa

2010

5 General

5.1 Safety

Please ensure that the relevant fire safety regulations are observed during the installation and commissioning of the LODOX® Statscan®.

The system has been tested to the following:

- IEC 60601-1-2
- CISPR11: Radiated and conducted interference field strength 0.15 MHz to 1000 MHz
- IEC 61000-4-2: Electrostatic charge
- IEC 61000-4-3: Radiated radio frequency electromagnetic field 80 MHz to 2500 MHz
- IEC 61000-4-4: Electrical fast transient/burst 5 ns/50 ns – 300 ms bursts
- IEC 61000-4-5: Surges

For safety reasons, all civil work must be completed prior to the commencement of the LODOX® Statscan® installation.

5.2 Radiation Protection

- It is required that the Operator Console be installed behind a lead lined x-ray screen. The lead shielding must have a minimum thickness of 1mm.
- It is highly recommended that all relevant radiation safety **compliance regulations** be adhered to when preparing the room. A safe working distance of at least 1.0 m **at the front of the unit must be kept clear in all machine views as a radiation safety limit.**
- FRM-13-0101 LODOX® Isodose Plotter form must be completed in order to finalise room shielding. This should be completed and signed off by the installation's authorized Radiation Protection Authority.

6 Pre-Installation Logistics

6.1 Customer Details

Customer Details	
Hospital name:	
Town / City:	
Province / State:	
Country:	

Contact person:	
Position:	
Telephone:	
Fax:	
E-mail:	
Other:	

6.2 Installation Date and Period

Installation		
Start Date:		
End Date:		
Ensure that the customer and all relevant hospital personnel (management, technical staff, security, etc.) are aware of the date that installation of the Statscan will commence.	Yes ☐	No ☐
Ensure that the customer and all relevant hospital personnel (management, technical staff, security, etc.) are aware of the proposed period of the installation.	Yes ☐	No ☐
If Not, Why?		

7 Site Survey

7.1 Parking and Offloading Area

Parking and Offloading Area			
Requirements		**Site Survey**	
Minimum offloading area dimensions	**5 m x 4 m**		
Offloading area characteristics	**Flat, Hard Surface**		
Maximum inclines on offloading area	**1:12**		
Suitable handling equipment must be catered for, e.g. crane truck and / or forklift.		Yes ☐	No ☐
Discuss and book a suitable parking and offloading area for the transport vehicle delivering the Statscan® with the hospital representative for the day of delivery.		Yes ☐	No ☐
The offloading area must be cordoned off from public and/or hospital staff not involved with the offloading of the Statscan®. This must be maintained until the transport company has removed all potentially harmful materials and objects from site and the hospital representative declared the site clean and safe.		Yes ☐	No ☐
If Not, Why?			

McClaren, Wilson & Lawrie, Inc.
Laboratory Design Consultants © 2013
In Association with CRSA

7.2 Access and Transport Routes

Access and Transport Routes			
Requirements		**Site Survey**	
Minimum doorway width	**1700 mm**		
Minimum doorway height	**2100 mm**		
Minimum passage width	**1850 mm**		
Minimum inclines on transport route	**1:12**		
If there are any steps or discontinuities along the way, it must be compensated for with a ramp or wedge capable of sustaining a point load of >800kg.		Yes ☐	No ☐
Discuss and plan a transport route with the hospital representative.		Yes ☐	No ☐
Check the capability of the Statscan® to maneuver around all the corners along the access route.		Yes ☐	No ☐
Ensure that the transport route will be cordoned off for the duration of the transportation process of the Statscan®, from the offloading site to the installation site.		Yes ☐	No ☐
If necessary, ensure that any tiles or shiny floor surfaces on the transport route will be **suitably protected from damage.**		Yes ☐	No ☐
If Not, Why?			

7.3 Installation Site Dimensions

Installation Dimensions	
Statscan® ASP	L 2824 mm x W 1603 mm x H 2310 mm
Statscan® large OC	L 836 mm x W 872 mm x H 1015 mm
Statscan® small OC	L 563 mm x W 872 mm x H 1015 mm
Statscan® DVS	Normal PC workstation with 20 inch monitor
Statscan® HVG	L 445 mm x W 360 mm x H 568 mm
Free area for service on HVG	Left 500 mm x Right 500 mm x Front 1000 mm
A 400 mm minimum access path around the front and sides of the unit is required for operation, service and maintenance.	
A 10 m cable length distance limitation is imposed on the positioning of the Statscan®, the OC and the Sedecal generator. It is required that the operator has a clear line-of-sight view of the patient when positioned on the gurney.	
Proper access of the patient trolley to and from the Statscan® must be evaluated, allowed for and agreed on with the Hospital Management.	
The Statscan® and trolley require a flat floor space of at least 3 m x 2 m, to be level within 5 mm.	

Site Survey		
Does the proposed installation site for the Statscan® meet the necessary minimum space and floor requirements?	Yes ☐	No ☐
Once the Statscan® ASP, OC, DVS and HVG are installed, will it hinder the normal flow of any people and/or equipment?	Yes ☐	No ☐
Did you explain to the customer that he/she has a choice between a small or large OC (see page 24 and 25 for dimensions)?	Yes ☐	No ☐
Did you explain the impact that the small or large OC will have on room layout?	Yes ☐	No ☐
If Not, Why?		

PLEASE NOTE: See Appendix for typical room layouts

McClaren, Wilson & Lawrie, Inc.
Laboratory Design Consultants © 2013
In Association with CRSA

7.4 Unit Weight

Unit Weight	
Statscan® ASP*	approx. 1000 kg
Statscan® DVS*	approx. 20 kg
Statscan® OC*	approx. 70 kg
Statscan® patient trolley*	approx. 120 kg
Sedecal 64 kW compact HVG*	approx. 72 kg

*** Packaging weight not included**

- **See Appendix for floor loading detail**

8 Electrical Requirements

8.1 Power Requirements

Power requirements	
Statscan® ASP	1 Phase / N / PE ~ 200-250 Vac ± 5 % (15A) 50 Hz ± 1 Hz
Statscan® DVS	1 Phase / N / PE ~ 200-250 Vac ± 5 % (15A) OR ~ 120 Vac ± 5 % (15A) 50/60 Hz ± 1 Hz
Statscan® Gurney	1 Phase / N / PE ~ 200-250 Vac ± 5 % (15A) OR ~ 120 Vac ± 5 % (15A) 50/60 Hz ± 1 Hz
Statscan® HVG	
Option 380	Option 480
3 Phase / PE 380/400 Vac ± 5 % 50 Hz ± 1 Hz	3 Phase 480 Vac ± 5 % 60 Hz ± 1 Hz
HVG maximum power	64 kW
Minimum KVA required	76.8kVA
RMS line current during exposure	130 A
Three phase circuit breaker rating	60 A
Single phase circuit breaker rating	20 A
Maximum power line impedance	0.135 Ω
HVG standby consumption	500 W

McClaren, Wilson & Lawrie, Inc.
Laboratory Design Consultants © 2013
In Association with CRSA

8.2 Recommended Cable Specifications

Cable Specifications	
Three phase cable to generator power module	16 mm² - Four core (Not longer than 20 ft / 6 m)
Single phase cable to room electrical cabinet	4 mm² - Three core
Single phase cable to OC	1.5 mm² - Three core
Single phase cable to Statscan®	2.5 mm² - Three core
Standard cable length from Statscan® to OC	12 m

PLEASE NOTE:

1. Consult the generator Pre-Installation Manual (PI-1005R1) for wire sizes from the hospital main distribution transformer to the room electrical distribution box. These vary depending on generator rating and distance.
2. All electrical cables must be adequately rated for the loads they are required to carry.
3. Where applicable, all earthing shall conform to relevant local standards.
4. It is essential that all the electrical power supplies to the unit (3 phases and 1 phase) be supplied with the same earth. If not, this could cause interference and unwanted image artifacts.
5. The supply for the ASP should be a permanent connection, i.e. not supplied via a standard wall plug. A suitable earth leakage must form part of this supply.
6. The Statscan® Operators Console and Diagnostic Viewing Station/s should be fitted with individual plugs which must be connected to the standard AC mains switches.
7. If it is required that the entire LODOX® Statscan® be operational during a power failure, then provision should be made for the full three phase to be available from a back-up system (UPS or hospital generators). In addition a UPS should be provided for the Statscan® Operators Console and Diagnostic Viewing Station/s.
8. A fiber link, a signal, a network and a control cable is necessary between the Statscan® and the OC. Relevant channeling/ducting must be provided to house such cables.

8.3 Electrical Site Survey

Electrical Site Survey			
Does the potential installation site conform to the relevant local electrical code standards?	Yes ☐	No ☐	
Does the potential installation site meet the minimum power requirements? Record measurements below.	Yes ☐	No ☐	
If applicable, does the back up power supply system meet the necessary minimum requirements? Record measurements below.	Yes ☐	No ☐	
Measurements:			
Mains:		Backup:	
Single Phase (L –N)		Single Phase (L –N)	
Three Phase (L1 – L2)		Three Phase (L1 – L2)	
Three Phase (L2 – L3)		Three Phase (L2 – L3)	
Three Phase (L1 – L3)		Three Phase (L1 – L3)	
Ground		Ground	
Line Impedance		Line Impedance	
Did you explain the impact that the small or large OC will have on room layout?	Yes ☐	No ☐	
Distance from the hospital main electrical distribution transformer to room electrical distribution box?		m / ft	
Distance from the room electrical distribution box to the generator power module?		m / ft	
Is the power line impedance measured less than the specified maximum?	Yes ☐	No ☐	
Ensure that the installed electrical wire sizes are correct according to the generator pre-installation document and the relevant distances.	Yes ☐	No ☐	
If Not, Why?			

McClaren, Wilson & Lawrie, Inc.
Laboratory Design Consultants © 2013
In Association with CRSA

8.4 Ambient Environment

Ambient Environment			
Operating ambient temperature range	+10 °C … +25 °C		
Relative humidity	40 % – 75 %		
Atmospheric pressure	700hPa – 1060hPa		
Ambient conditions	Dust free Non-corrosive atmosphere		
Estimated heat load	10 000 Btu/h (2500 kcal/h)		
Recommended cooling capacity	20 000 Btu/h (5000 kcal/h)		
Ambient Environment			
Ensure that the potential installation site meet these requirements.		Yes ☐	No ☐
If Not, Why?			

- **Ideally the Lodox® Statscan® should be maintained at the lowest temperature permissible, or possible for the hospital in question. The system heat load is estimated to be 10 000 Btu/hr (2500 kcal/hr).**
- **Cognizance must also be made of the heat load of the room that the Lodox® Statscan® would be installed in. As a guideline, an air cooling system of total capacity of about 20 000 Btu/hr (5000 kcal/hr) is recommended.**
- **The Lodox® Statscan® should ideally be placed in a position where large fluctuations in temperature are avoided (i.e., if possible, not too close to an outside door, open window, etc.).**
- **The lighting in the Statscan® area should be adequate, preferably of the fluorescent type, with no direct light source focused on the patient trolley in position. This will influence the brightness of the beam from the laser localizer.**
- It is highly recommended that the DVS area be fitted with dimmable lights to ensure the highest level of image quality when diagnosing from the viewer.

8.5 Network Interface

Network	
Network Data Rate	100 Mbps
Network cables	CAT5 eight core twisted pairs with suitable RJ45 sockets, or better
Network HUB	Suitable HUB can be supplied with Lodox Statscan®

Connection points on the network HUB will be used for connection to the following modules:

- PACS(s)
- Network printer(s)
- Additional DVS(s)

To ensure successful integration into the existing hospital PACS system perform the full "Pre-Installation PACS Testing Procedure" as described below.

Pre-Installation PACS Testing Procedure

REQUIREMENTS

- Laptop with latest version of DVS software installed
- Valid IP address on hospital network under test
- DICOM node information (AE Title, hostname/IP address, port number) for PACS(s) and printers(s) under test
- DICOM conformance statements for PACS and printers (if available)
- Test image database (described below)

TEST IMAGES

The test image suite is a study containing the following images:

- "Standard" AP image of suitable phantom (e.g. chest), target to detector distance set to 50 mm.
- "Standard" lateral image of suitable phantom (e.g. chest), target to detector distance set to 400 mm.

- AP image of round phantom (e.g. wax block), target to detector distance set to 50 mm
- Lateral image of round phantom, target to source distance set to 400 mm
- Lateral image of round phantom with phantom set 200 mm from detector (as per RAD MP), target to detector distance set to 200 mm.

Pre-test Configuration

Use AEConfig to create an entry/entries for the PACS(s) and printer(s) under test on the laptop. Use the DICOM Verify function in DVS software to confirm basic DICOM connectivity is functioning. Set up the test database as the current database using AEConfig.

PACS Testing

Using REGEDIT, verify that the following entries are set as directed:

- **PACS_INCLUDE_ICON_IMAGE** = 1
- **PACS_UNIQUE_SERIES_PER_IMAGE** = 1
- **PACS_ASPECT_CORRECT_DATA_BEFORE_SEND** = 0

If the PACS is a GE Centricity, then **PACS_INCLUDE_ICON_IMAGE** should be set to 0 at the start.

Send the "Standard" AP and Lateral images from the first Study to the PACS. Verify that the images in the Study can be correctly browsed on the PACS.

If the images can be browsed correctly but are not aspect ratio compensated on the PACS, have the PACS administrator delete the images. Change the **PACS_ASPECT_CORRECT_DATA_BEFORE_SEND** value to 1 and resend the images. Verify that the re-sent images are aspect ratio compensated when viewed on the PACS.

If the sending is unsuccessful, set **PACS_INCLUDE_ICON_IMAGE** to 1 and re-send the images. If sending is still unsuccessful, consult with local support staff to determine the cause and report the issue to Engineering as soon as possible, if it is determined that a modification/workaround is required on the Lodox side.

Once the "Standard" images, have been sent and viewed successfully, send the three round phantom images to the PACS. Ensure that the images can be displayed at true-size and (if available) measurements done correctly when viewed on the PACS Workstation. Note that certain systems (e.g. eRad) may require monitor or other calibration to be performed before images can be displayed true-size. In addition, verify that the images are correctly compensated for aspect ratio, as tested previously.

Equipment & Data Services Sheet ***Equipment No:*** **ME25**

ISO 13485:2003 LODOX.COM

If true-size viewing / correct measurements cannot be done, consult with local support staff and/or the PACS vendor to determine possible resolution. If possible, vendor contact person information should be forwarded to Engineering in order to facilitate speedy resolution of the issue.

McClaren, Wilson & Lawrie, Inc.
Laboratory Design Consultants © 2013
In Association with CRSA

ISO 13485:2003 LODOX.COM

Printer Testing

Use AEConfig to set up printer pixel matrix sizes and resolution for each printer to be tested. This information is usually found in the Printer conformance statement (usually available on the vendor website for modern printers). Alternatively, for common printer types such as the Kodak 8700 and various derivatives, refer to the Wiki article (if present) for this information. In addition, ensure that the printers are set to print at True Size.

If no pixel or resolution information is available, the following rule-of-thumb may be used to determine approximate values:

For a 14 x 17 inch film, assume a printable area of around 13 in x 16 in. Pick a resolution (e.g. 320 dpi) and determine the pixel width & height values by multiplying the dpi value by the printable width & height values (e.g 13 x 320 and 16 x 320). Do a test print with these values. If the print fails then use progressively lower resolution values (e.g. 300, 280, 250, recalculating the pixel matrix size accordingly) until the print is successful. If the print is successful at the initial resolution, increase the resolution accordingly until the print fails and then use the largest last successful value as the resolution

Once the printer resolutions have been set up, print each of the round phantom images, ensuring that the images are viewed at 100 % zoom. Check that the printed images are true size prints by measuring the size of the phantom on the print and comparing to the phantom itself. If the images do not print at true size, then some manual fine-tuning of the pixel matrix values and/or resolution may be necessary.

If printing is not successful (no film is produced) then consult with local support staff to determine the cause and report the

ISO 13485:2003 LODOX.COM

Test Results

After completing the tests, a brief report should be compiled documenting the results and any issues that may have arisen as a result of the tests.

If not already done, a new article should be started for the site on the Lodox WIKI site.

Network Interfaces		
Documentation required:		
Site network plan	Yes ☐	No ☐
Site network configuration	Yes ☐	No ☐
DICOM Configuration information for each node (PACS, Printers and Worklist Servers). This must include AE titles, IP addresses etc., as well as printer pixel matrix and resolution information **for each supported film size**.	Yes ☐	No ☐
DICOM conformance statements	Yes ☐	No ☐
Any other pertinent site-specific information	Yes ☐	No ☐
Conformance to specifications:		
Does the specific installation site conform to these network requirements?	Yes ☐	No ☐
If not, is the hospital system administrator aware of the specific network requirements and will it be in place before the actual installation commences?	Yes ☐	No ☐
If Not, Why?		

McClaren, Wilson & Lawrie, Inc.
Laboratory Design Consultants © 2013
In Association with CRSA

ISO 13485:2003 LODOX.COM

9 X-rays Warnings and Interlocks

9.1 External Radiation Warning Light

External Radiation Warning Lights and Signage		
The HVG can control an external radiation warning light. The light is to be installed by the hospital electricians before the installation commences. Has the radiation warning light been installed according to specifications?	Yes ☐	No ☐
In conjunction with the hospital representative determine what additional signage is required for the site and the location where this signage must be placed. This signage is to be installed by the hospital before the installation commences. Has the signage been installed by the hospital as agreed?	Yes ☐	No ☐
If Not, Why?		

McClaren, Wilson & Lawrie, Inc.
Laboratory Design Consultants © 2013
In Association with CRSA

9.2 Door Contact

Door Contact		
If necessary, the LODOX® Statscan® can be fitted with a door interlock that prevents the system from generating x-rays when the examination room door is open. The door contact is to be installed by the hospital electricians before the installation commences. Has the door contact been installed according to specifications?	Yes ☐	No ☐
If Not, Why?		

McClaren, Wilson & Lawrie, Inc.
Laboratory Design Consultants © 2013
In Association with CRSA

12 Appendices

12.1 Appendix A - LODOX® Statscan® Floor Loading Detail

The maximum mass of a LODOX® Statscan® Scanner is 1150 kg. This is made up of: the Scanner Frame assembly (static portion) being 770 kg and the mass of the Moving Assembly being 380 kg.

There are four different scenarios that the machine can result in loads on the pads (depending on the relative position of the moving support housing and rotation of the C-arm). The worst case loading on each pad is being shown on the sketch below:

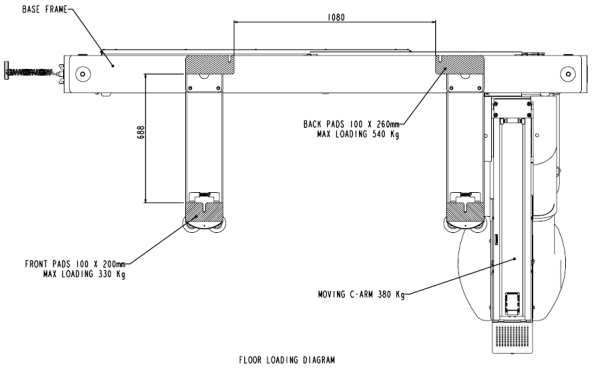

FLOOR LOADING DIAGRAM

Equipment & Data Services Sheet ***Equipment No:*** **ME25**

ISO 13485:2003

LODOX.COM

12.2 Physical Dimensions of Statscan VE 1

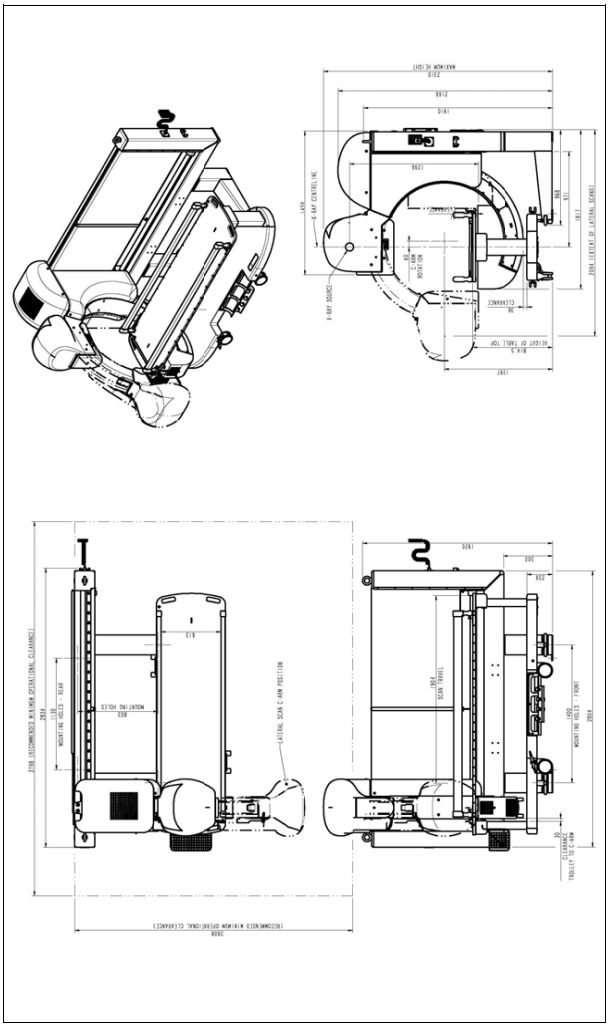

Equipment & Data Services Sheet ***Equipment No:*** **ME25**

ISO 13485:2003

LODOX.COM

12.3 Operator ConsoleDimensions (Large Version)

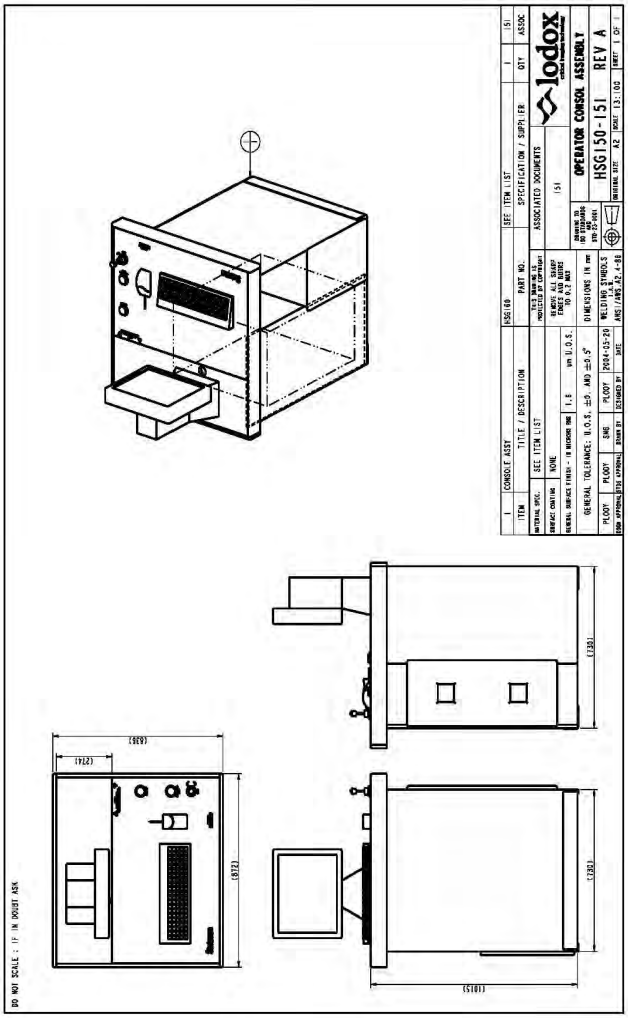

Revision A

Page 29 of 32

Form No FRM-02-0004

Equipment & Data Services Sheet ***Equipment No:*** **ME25**

ISO 13485:2003

LODOX.COM

12.4 **Operator ConsoleDimensions (Narrow Version)**

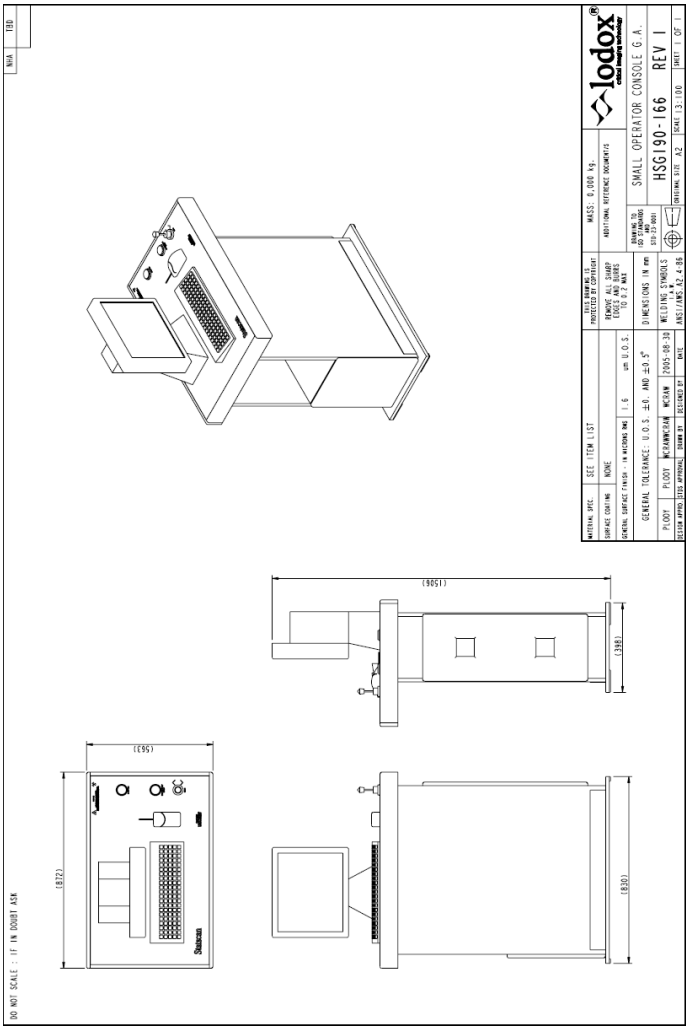

Equipment & Data Services Sheet ***Equipment No:*** **ME25**

ISO 13485:2003

LODOX.COM

12.5 Suggested Room Layouts

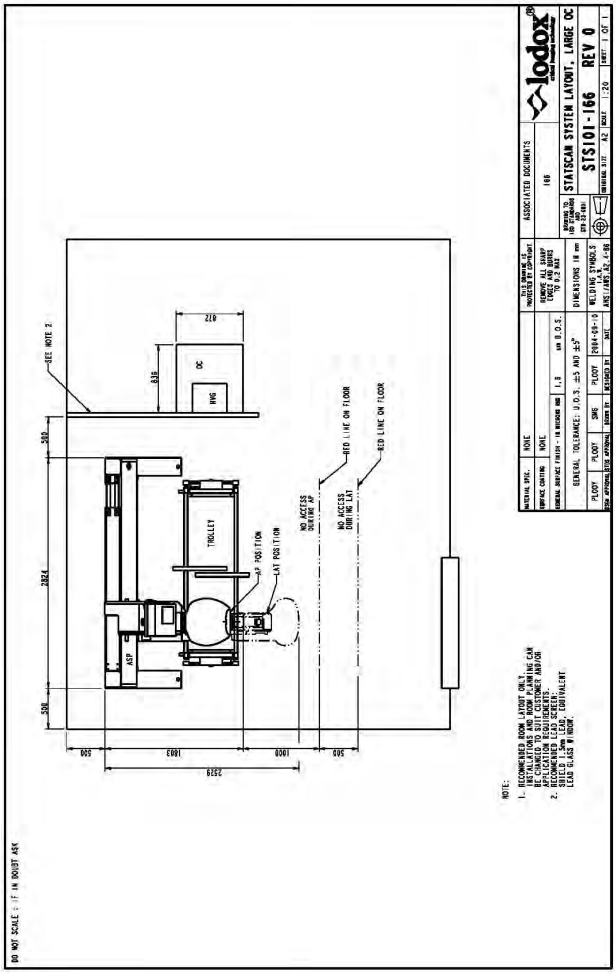

Revision
A

Page
31 of 32

Form No
FRM-02-0004

Equipment & Data Services Sheet ***Equipment No:*** **ME25**

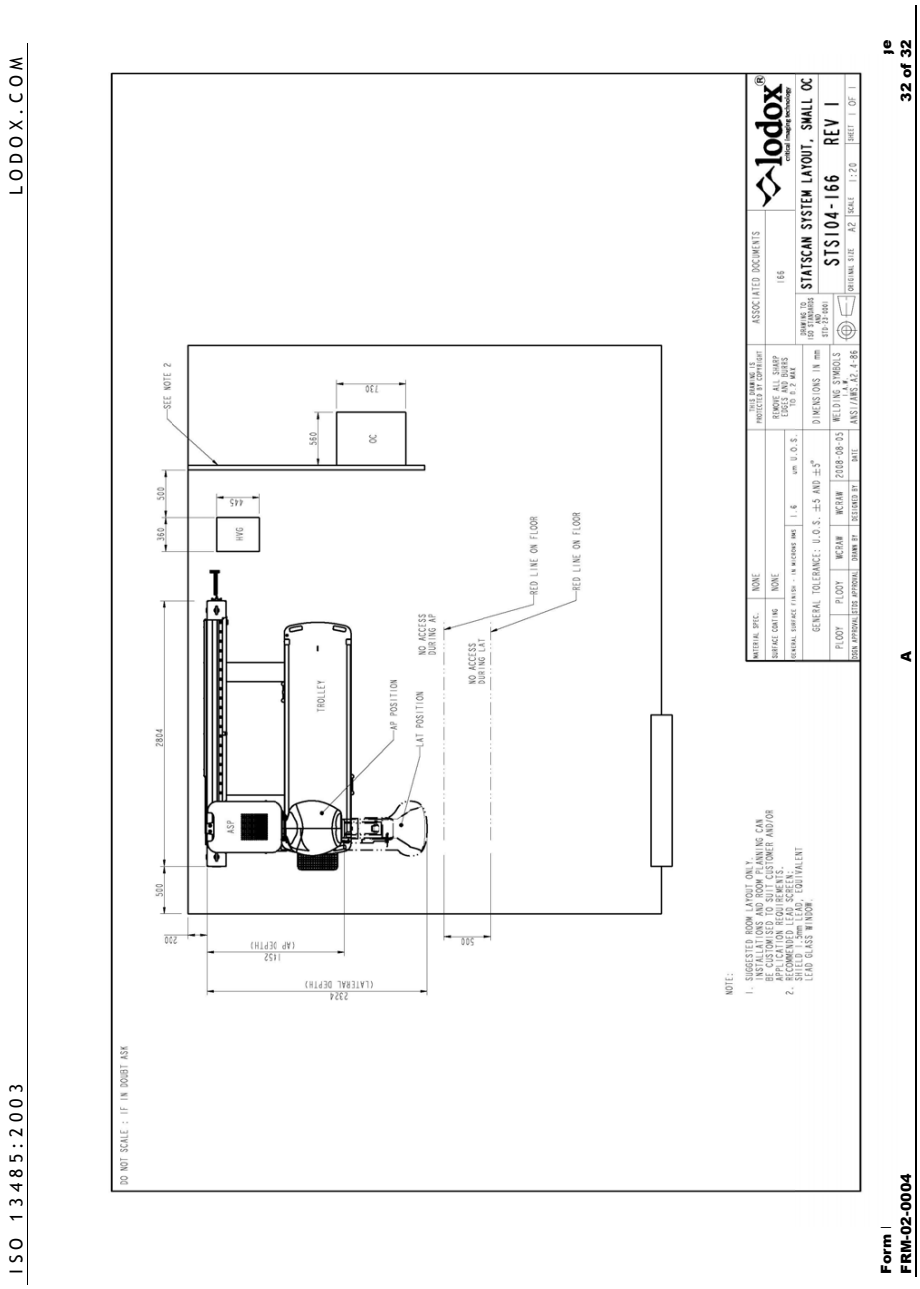

Equipment & Data Services Sheet ***Equipment No:*** **ME25**

lodox® critical imaging technology

MAN-13-0015
REV B

Statscan®

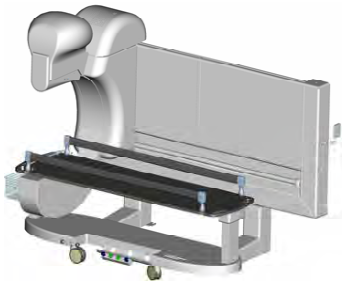

AP Imaging Position

Oblique Imaging Position

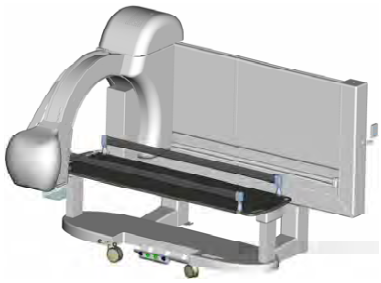

Lateral Imaging Position

Statscan® VE1 Critical Imaging System – Product Specifications and Physical Dimensions

Image Quality					
Contrast Resolution	>16000 grey levels (14 bits) – After log compression				
Fundamental pixel size.	60 µm (1x1 binning)				
Maximum Size	1800 mm * 680 mm (full body size, measured at lowest table height)				
Minimum Size	100mm * 100mm				
Resolution	**Resolution (lp/mm)**	**Binning**	**Pixel Size (µm)**	**Contrast (Grey Levels)**	**Image Size (Pixels/Area)**
Ultra high resolution mode	5.0 (8.33)	1x1	60	6000	12283 x 8000 / 480 mm * 680 mm
Very High resolution mode	4.2	2x2	120	12000	6141 x 8000 / 900 mm * 680 mm
High resolution mode	2.1	4x4	240	24000	3070 x 8000 / Full Body size
Standard resolution mode	1.4	6x6	360	36000	2048 x 8000 pixels / Full body Size
Base resolution mode	1.1	8x8	480	48000	1536 x 8000 pixels / Full body Size

Scanner throughput	
Linear scanning rate or speed (3 settings)	35mm/s, 70mm/s, and 140mm/s ± 5%
Beam Width (FWHM @ 1000mm from focal spot)	1.4 – 2.8 mm ± 5%
Instantaneous frame rate (X-Ray exposure duration at any one point)	11 – 80 milliseconds ± 5%
Time to complete a full field scan	<13 seconds (nominally 12.98s at normal speed)
Time from "end-of-scan" until a diagnostic image becomes available on the DVS screen	<15 seconds (normal resolution image on a stand-alone 100 Mbits/s Ethernet Base-T network)
Best case time between two successive x-rays on the same patient.	28 seconds (provided heat capacity of X-ray tube < 20%)

Compliance	
US FDA Pre- Market Clearance (510k) No. K013999 Accession # 0310920 EU CE-Mark, ISO 13485:2003, ISO 9001:2000 Japan Marketing Certificate #220AIBZX00001000 QMS Conformity Certificate #S080212	CE 0120 SGS UKAS FDA Department of Health and Human Services Approved NASA Nanotec Spindler

These specifications are current and subject to change, Lodox Systems reserves the right to revise these specifications to ensure a well-engineered product.

Equipment & Data Services Sheet ***Equipment No:*** **ME25**

lodox® critical imaging technology

MAN-13-0015
REV B

Statscan®

Image flexibility	
Radial angles	0 to 90 degrees. The supine or prone patient can be x-rayed in any radial angle from AP (or PA) to the supine lateral positions.
Caudal-cranial / Crano-caudal angles	0 to 10 degrees. Projections can easily be accomplished by angling imaging tabletop as needed.
Longitudinal angles	The trolley (gurney) top height can be adjusted vertically by 0 to 340 mm, by adjusting only one side of the trolley gives Trendellenburg angles up to +/- 10 degrees.

X-Rays Output			
Radiation Type	This equipment emits ionized x-radiation through an adjustable width narrow slit thereby producing fan-beam scanning across the patient. This slit set to 0.4 mm (typically) or 1mm for large patients		
Direct Absorbed dose	Maximum direct dose absorption is 1 mGy. For typical procedures approximately 25%, on average, of equivalent conventional doses is needed.		
Leakage Radiation	The maximum leakage radiation measured 1 meter from the X-ray focal spot in any direction is less than 20 µGy per hour @ 130kV 25mA		
X-ray Tube	Rotating Anode "CT" type. 2000kHU with increased cycle capacity. Upgradeable to 3500kHU		
X-ray Generator	Peak Power	64kW	
	Voltage Range	50kVp - 145 kVp	*±(3%+1 kVp)*
	Voltage Rise Time	2mS (10 to 90%)	
	Current Range	32mA to 400mA	*±(4%+1mA)*
	Voltage Ripple	0.5%	
	Exposure Time	0.6 s to 16 s	*±(2.5% + 10ms)*
	Operating frequency	40kHz	

Flexible-Format Image Information	
Image size range	680mm x 1800mm maximum for full body. Adjustable from 100mm x 100mm to maximum in any area on the patient without moving the patient
Image Storage & Backup	120 GB Hard disk (minimum); includes a standard DVD writer for archiving and backup purposes.
Detector System	
Detector	Proprietary ultra low noise TDI CCD detector (similar to spiral MDCT).
X-ray to light conversion	Rarex Green Fast ("Gadox" = $GdOS_2$:Tb)

Trolley / Gurney - This patient imaging table is designed to double as a resuscitation table.	
Weight Capacity & Positioning	220kgs/440Lbs; Height can be adjusted from 0 to 340mm. Allows Trendelenburg angles +/- 10 degrees. Radiolucent Carbon Fiber Rails may be left "Upright" during lateral imaging procedures.
Dimensions:	LxWxH : 2200mm x 740mm x 810mm / 87" x 30" x 32" (inches)
Maximum Height :	Height adjustable to 1150 mm / 45" (inches)

Machine Dimensions	
Weight :	1200 kg / 2645 Lbs
Dimensions:	LxWxH: 2804mm x 1617mm x 2310mm / 110.4" x 64" x 91" (inches)
Room height Requirement:	2450 mm / 96.5" (inches)
Operating Envelope:	LxWxH: 2834mm x 2322mm x 2322mm / 112" x 91.4" x 91.4" (inches)
Required Minimum Area:	LxW: 3798 mm x 2808 mm / 150" x 110" (inches)

These specifications are current and subject to change, Lodox Systems reserves the right to revise these specifications to ensure a well-engineered product.

Equipment & Data Services Sheet ***Equipment No:*** **ME25**

lodox® critical imaging technology

MAN-13-0015
REV B

Statscan®

Diagnostic viewing system (DVS) software	
Monitor	High Luminance (≥ 280Cd/m²) High Contrast (700:1) / 1600 x1200 pixels Size (20”). Flexible orientation (portrait vs landscape). Medically rated DICOM Compliant LCD available as optional extra.
Type	DVS software is functionally integrated into the Operator’s workstation. (Optional standalone viewing workstations can be installed at multiple convenient viewing locations)
Image Viewing - Landscape or Portrait Image display capabilities	
Image recall	Images viewed by Previous, Next, Latest, Patient name, Referring doctor, Hospital number etc.
Database	Images in the database belonging to a study or patient can be easily retrieved.
Zoom / Pan / Rotate / Aspect	Real time “Mouse wheel” zoom, pan, rotate, and aspect adjustment all standard.
Image Manipulation / **lucid**® image enhancement	Windowing and leveling of grey scales automatically adjusted for optimal viewing. Initial “best view” with **lucid**® enhanced image processing simultaneously adjusts for soft tissue and bone.
Anatomical Measurement Capability	Straight line and angle (i.e. Cobb angles) measurements of any body part in any 2D projection.
Palette Function (Auto/Manual)	Allows the user to independently select the range of grey scales that can be displayed.
Invert Function	Changes the view from a “black bone” to a “white bone” image.
Image Size	Variable dependant on exposure area, as well as resolution e.g. Full-body, normal resolution requires approximately 30Mbyte. Largest possible image requires approximately 188Mbyte. Average capacity approx. 3000 images on a 120Gb disk.

Power requirements		
Statscan® ASP	1 Phase / N / PE ~ 200-250 Vac ± 5 % (15A) 50 Hz ± 1 Hz	
Statscan® Gurney	1 Phase / N / PE ~ 200-250 Vac ± 5 % (15A) or ~ 120 Vac ± 5 % (15A) 50/60 Hz ± 1 Hz	
Statscan® HVG	**Option 380**	**Option 480**
	3 Phase / PE **380/400 Vac ± 5 %** **50 Hz ± 1 Hz**	**3 Phase / PE** **480 Vac ± 5 %** **60 Hz ± 1 Hz**
HVG maximum power	**64 kW**	
Minimum KVA required	**76.8kVA**	
RMS line current during exposure	**130 A**	
Three phase circuit breaker rating	**60 A**	
Single phase circuit breaker rating	**20 A**	
Maximum power line impedance	**0.135 Ω**	
HVG standby consumption	**500 W**	

Ambient Environment	
Operating ambient temperature range	**+10˚C … +25˚C**
Relative humidity	**40 % - 75 %**
Atmospheric pressure	**700hPa - 1060hPa**
Ambient conditions	**Dust free** **Non-corrosive atmosphere**

These specifications are current and subject to change, Lodox Systems reserves the right to revise these specifications to ensure a well-engineered product.

McClaren, Wilson & Lawrie, Inc.
Laboratory Design Consultants © 2013
In Association with CRSA

Equipment & Data Services Sheet ***Equipment No:*** **ME25**

lodox® critical imaging technology

MAN-13-0015
REV B

Statscan®

Statscan® Critical Imaging System	Statscan® Tableside Control Pad
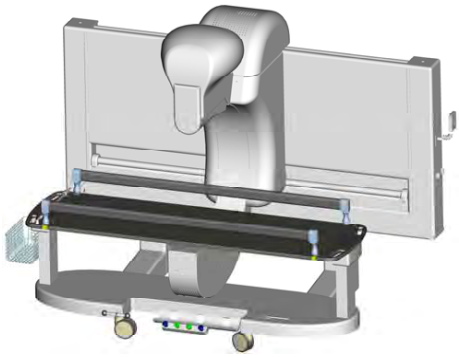	

Physical Characteristics - Front View	Physical Characteristics - Side View
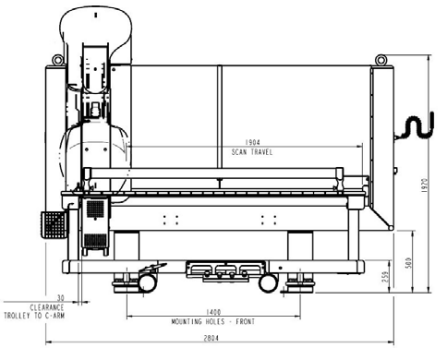	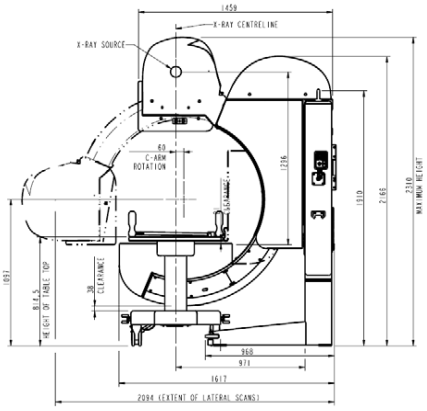
Room Height Req: 96.5 inches (2450mm) Main System Weight: 2645 lbs (1200kg)	LxWxH: 110.4” x 64” x 91” (inches) LxWxH: 2804mm x 1617mm x 2310mm

These specifications are current and subject to change, Lodox Systems reserves the right to revise these specifications to ensure a well-engineered product.

Equipment & Data Services Sheet ***Equipment No:*** **ME25**

MAN-13-0015
REV B

Physical Characteristics - X-ray Generator Cabinet	Physical Characteristics - C-Arm
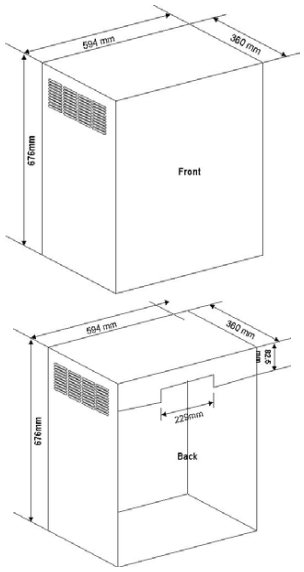	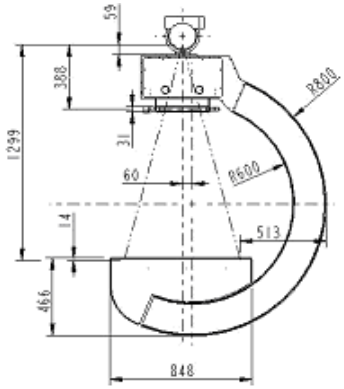

Equipment & Data Services Sheet ***Equipment No:*** **ME25**

lodox® critical imaging technology

MAN-13-0015
REV B

Statscan®

Statscan® Diagnostic Viewing Station (DVS)	Statscan® Operator Console (OC)
OC Physical Characteristics - Front / Side View	**OC - Functional Description**
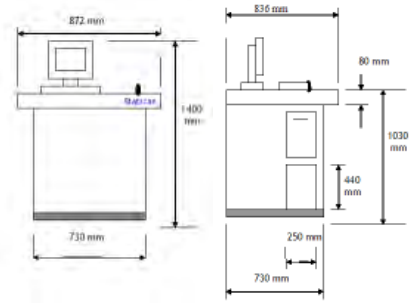 This OC Configuration May Also Be Used To House the X-ray Generator Cabinet	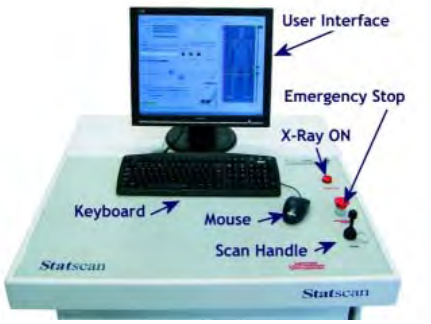
OC Graphic User Interface (GUI)	**OC Graphic User Interface (GUI)**
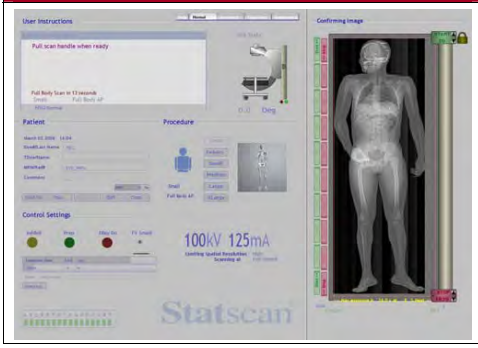	

These specifications are current and subject to change, Lodox Systems reserves the right to revise these specifications to ensure a well-engineered product.

McClaren, Wilson & Lawrie, Inc.
Laboratory Design Consultants © 2013
In Association with CRSA

Equipment & Data Services Sheet ***Equipment No:*** **ME25**

MAN-13-xxxx
REV A

NOTE: Preliminary Information Subject to Change without notice!

Trolley/Gurney for Statscan® VE1- Product Specifications and Physical Dimensions

The Patient Trolley is a patient transport, x-ray imaging and treatment gurney designed for use with the LODOX Statscan system, as well as providing specialised features for general use as a trauma and emergency treatment table. It consists of an X-ray translucent mattress for patient comfort, a height adjustable x-ray translucent tabletop and a trolley base-frame on lockable swivel castors. It is helicopter and ambulance port compatible.

Trolley Docked to Statscan®	Trolley Detail View
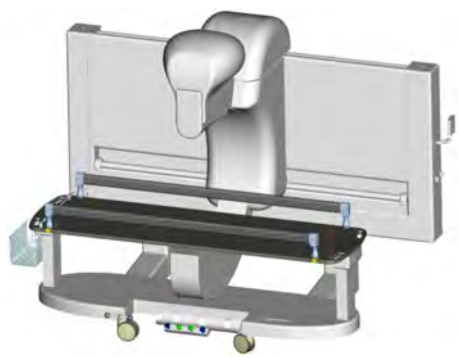	

Model:	TRL 116 - standard capacity	TRL 117 - bariatric capacity
Maximum patient weight	200kgs/440lbs	300kgs/660lbs
Thickness of table top	25 mm	35 mm
Height of table top above floor level	810mm	820mm
Nominal Dimensions	LxWxH : 2450mm x 740mm x 815mm / 96” x 27.7” x 32” (inches)	
Maximum slope of tabletop	+/- 10 degrees, for Trendellenburg imaging applications	
Table Top Material	Radiolucent composite carbon fiber over full patient size area	
Height Adjustability from floor level	Height adjustable from 810mm to 1160mm / 32” to 45.7” (inches)	
Operator Height Control	Via four foot-operated pushbuttons	
Operator Steer/Brake Control	Via foot-operator levers installed on both long sides of the trolley	
Side Rails Material	Radiolucent composite carbon fiber.	
Side Rails Adjustment	• Fold down for easy patient loading/unloading • Clip into “high position” for artifact free lateral spine views, raises by 100mm.	
Patient Support Mattress/Pad	LxWxH : 1900mm x 650mm x 50mm / 75” x 25.6” x 2”. Foam rubber with washable cover.	
Electric Hoists	2x 24volt DC motors operation thru xxx gear and lead screw	

These specifications are current and subject to change, Lodox Systems reserves the right to revise these specifications to ensure a well-engineered product.

Contact: Lodox Systems (Pty) Ltd **+2711-444-9118** sales@lodox.com www.lodox.com

Equipment & Data Services Sheet ***Equipment No:*** **ME25**

lodox® critical imaging technology

MAN-13-xxxx
REV A

Statscan®

Batteries	• 24volt (2x 12volt), 12 amp-hour gel type. • Chargeable when docked to Statscan or from the nearest convenient AC power mains outlet.
Operating cycles - docked	Indefinite (with the trolley docked to Statscan or plugged into mains)
Operating cycles - undocked	At least 100 lift/lower cycles from when the batteries are full charged.
AC Mains Requirement	Selectable: 220 – 250volts, 50Hz or 110 – 120volts, 60Hz
Battery Lifetime	At least one year, typically two years
Maximum Battery Re-charge time	To be advised
Battery Charger (integral to Statscan)	To be advised
Battery Charger when plugged into mains	To be advised
Other Features	• Fold-up drip bag holder that is height adjustable via a telescopic clamp • Oxygen cylinder holder (suitable for type x and type y gas bottles) • Basket for ambo bag & patient possessions • Two Velcro strips underneath on each side along the full length of table top for easy attachment of patient restraints straps (two straps are supplied with each trolley)

Trolley Dimensional Views

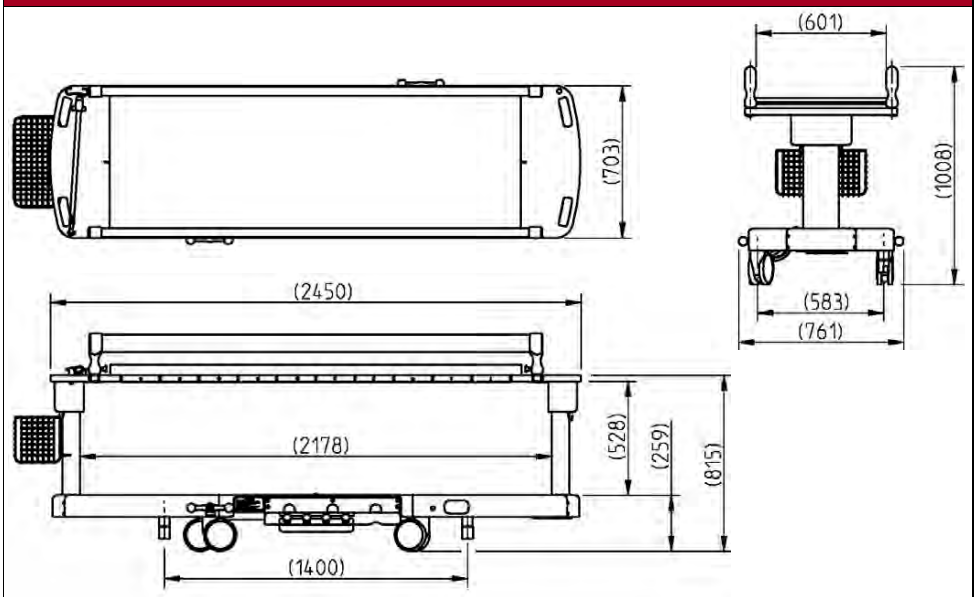

These specifications are current and subject to change, Lodox Systems reserves the right to revise these specifications to ensure a well-engineered product.

Equipment & Data Services Sheet ***Equipment No:*** **ME25**

GENERAL NOTES

AT THEIR EXPENSE, THE CUSTOMER AND/OR THE CONTRACTOR WILL BE EXPECTED TO PROVIDE THE FOLLOWING (IF REQUIRED) PRIOR TO X-RAY EQUIPMENT DELIVERY AND INSTALLATION:

1. ANY ROOM REMODELING AND CONSTRUCTION - FLOOR CEILING AND WALLS MUST BE FINISHED BEFORE EQUIPMENT INSTALLATION CAN BEGIN.
2. INSTALLATION OF PROPER SPECIFIED POWER.
3. INSTALLATION OF LOAD CENTERS, BRANCH PANELS, WIRE TROUGH, CIRCUIT BREAKERS, JUNCTION BOXES AND CONDUIT AS SPECIFIED.
4. INTERCONNECTING WIRE AND CABLE AS SPECIFIED.
5. INSTALLATION OF WALL AND CEILING SUPPORT AND SUSPENSION FRAME WORK AS SPECIFIED.
6. FOR THE MOST PART CONVENIENCE OUTLETS ARE TO BE SPECIFIED BY OTHERS. REQUIRED OUTLETS WILL BE DEPICTED. FOR EASE IN SERVICE, LOCATE AT LEAST ONE OUTLET ON EACH WALL WITHIN CLOSE PROXIMITY TO THE CONTROL CONSOLE AND X-RAY CONTROL CABINET
7. ANY CEILING MOUNTED LIGHT FIXTURES, DIFFUSERS, VENTS, SMOKE/FIRE DETECTORS, SPRINKLER HEADS, HALON NOZZLES, ETC. SHALL NOT EXTEND MORE THAN 1/2" BELOW THE FINISHED CEILING. IF REQUESTED, A SUGGESTED REFLECTED CEILING PLAN IS SUPPLIED. THIS CEILING PLAN IS BASED ON UNISTRUT LOCATIONS AND EQUIPMENT LAYOUT.
8. ANY PLUMBING REQUIREMENTS.
9. INSTALLATION OF WARNING LIGHTS AND/OR INTERLOCK SWITCHES AT MAIN DOOR OF EXAM ROOM TO BE COORDINATED WITH EQUIPMENT REPRESENTATIVES.
10. ANY AIR CONDITIONING REQUIREMENTS. (HEATING, VENTILATION, AIR CONDITIONING AND HUMIDIFICATION)
11. ALL ANCILLARY AND ACCESSORY ITEMS SUCH AS: FILM PROCESSORS, TANKS, DRYERS, SILVER COLLECTION SYSTEMS, FILM LOADING BINS, CASSETTE TRANSFER CABINETS, SAFE-LIGHTS, ILLUMINATORS, ETC.
12. RADIATION PROTECTION REQUIREMENTS - THESE MUST BE SPECIFIED BY A QUALIFIED RADIATION PHYSICIST

QUALITY ASSURANCE:

NATIONAL BUREAU OF STANDARDS: COMPLY WITH REQUIREMENTS OF THE NATIONAL COUNCIL ON RADIATION AND MEASUREMENT (NCRP) REPORT NO. 49, "STRUCTURAL SHIELDING DESIGN AND EVALUATION FOR MEDICAL USE OF X-RAYS AND GAMMA RAYS OF ENERGIES UP TO 10 MEV," AS APPLICABLE TO THIS WORK. COMPLY WITH REQUIREMENTS OF LOCAL REGULATORY AGENCIES WHERE STANDARDS AND CRITERIA EXCEED NRCP SPECIFICATIONS BY THE RADIATION PHYSICIST SUPERSEDES THESE DRAWINGS. REPORT NO. 49.

TESTING:

AFTER X-RAY EQUIPMENT HAS BEEN INSTALLED AND PLACED IN OPERATING CONDITION, THE SHIELDING SHALL BE TESTED, AT THE OWNER'S EXPENSE, BY A NATIONALLY CERTIFIED HEALTH PHYSICIST. TESTING SHALL BE PERFORMED IN ACCORDANCE WITH THE REQUIREMENTS OF NBS HANDBOOK H-76 "MEDICAL X-RAY PROTECTION UP TO THREE MILLION VOLTS." THE DECISION OF ACCEPTABILITY BY HEALTH PHYSICIST SHALL BE THE RESPONSIBILITY OF THE CONTRACTOR. THEREFORE, THE CONTRACTOR IS RESPONSIBLE FOR REPAIRS OR REPLACEMENT OF ALL DEFECTIVE WORK (INCLUDING WORK SUBSEQUENTLY AFFECTED) AND ADDITIONAL TESTS REQUIRED TO MEET THE SATISFACTION OF THE HEALTH PHYSICIST.

LIABILITY:

THE EQUIPMENT REPRESENTATIVES ASSUME NO RESPONSIBILITY FOR ANY CONSTRUCTION COSTS, WHETHER OR NOT RELATED TO THE INSTALLATION OF OUR EQUIPMENT. NO WORK MAY BE PERFORMED OR MATERIALS FURNISHED AT OUR EXPENSE UNLESS AUTHORIZED BY A SIGNED, FORMAL PURCHASE ORDER. ADDITIONALLY, A SITE INSPECTION SHALL BE CONDUCTED BY THE EQUIPMENT REPRESENTATIVES TO CONFIRM THE SITE'S READINESS PRIOR TO X-RAY EQUIPMENT DELIVERY. THIS INSPECTION SHALL BE PERFORMED WHEN NOTIFIED OF THE CONSTRUCTION'S COMPLETION.

Equipment & Data Services Sheet ***Equipment No:*** **ME25**

ARCHITECTURAL NOTES

1. THIS SET OF DRAWINGS ARE FOR THE PURPOSE OF A LAYOUT PLAN ONLY - NOT FOR CONSTRUCTION. THESE DRAWINGS ARE FOR THE BENEFIT OF PURCHASER'S ARCHITECT OF CHOICE. THE ARCHITECT AND BUILDING CONTRACTORS SHALL CONVERT THIS LAYOUT INTO WORKING AND CONSTRUCTION DRAWINGS OBSERVING ALL PREVAILING CODES. THESE DRAWINGS ARE INTENDED TO PROVIDE THE CONSTRUCTION PARTICIPANTS WITH SPECIFICATION AND CONCEPTUAL INFORMATION ONLY. EVERY EFFORT HAS BEEN MADE TO CONFORM DETAILS TO THE ACTUAL EQUIPMENT EXPECTED TO BE INSTALLED. THIS FLOOR PLAN WAS SCALED FROM PRINTS DRAWN BY OTHERS. ALL CONSTRUCTION PARTICIPANTS SHALL VERIFY AND ADJUST DIMENSIONS. CRITICAL DIMENSIONAL RELATIONSHIPS HAVE BEEN SUPPLIED. IT IS THE RESPONSIBILITY OF ALL CONSTRUCTION PARTICIPANTS TO ADHERE TO THESE DISTANCES. ALL DIMENSIONS ARE FROM FINISHED SURFACES UNLESS OTHERWISE NOTED. ARCHITECT SHALL VERIFY THAT ALL DOOR AND PASSAGEWAY SIZES ARE ADEQUATE FOR TRANSPORTING EQUIPMENT FROM EXTERIOR OF BUILDING INTO RESPECTIVE ROOMS. RECOMMEND COVERING OR REMOVING THRESHOLDS. THE EQUIPMENT REPRESENTATIVES OR THEIR DESIGNER ARE NOT RESPONSIBLE OR LIABLE FOR ANY ERRORS OR OMISSIONS. THOSE MAKING USE OF OR RELYING ON THIS MATERIAL ASSUMES ALL RISKS AND LIABILITY ARISING FROM SUCH USE OR RELIANCE. ALL CONSTRUCTION SHALL COMPLY WITH BUILDING CODES AND REGULATIONS THAT HAVE JURISDICTION.
2. ALL SUPPLY DIFFUSERS SHALL NOT CAUSE DIRECT AIR CURRENTS ON PATIENTS OR OPERATORS. RECOMMEND 2' x 4' LAY-IN CEILING PANELS OF MATERIAL ACCEPTABLE TO CUSTOMER AND APPROVED BY PREVAILING CODES. LIGHTING FIXTURES, VENTS, ETC. TO BE FLUSH WITH FINISHED CEILING.
3. ARCHITECT AND ENGINEERS SHALL USE EXISTING ELECTRICAL AND STRUCTURAL ITEMS WHEN FEASIBLE.
4. ALL WORK, EXCEPT INSTALLATION OF DIAGNOSTIC IMAGING EQUIPMENT, IS TO BE DONE BY THOSE OTHER THAN THE EQUIPMENT REPRESENTATIVES.
5. SOME CONVENIENCES MAY BE REQUIRED BY CODE OR DESIRED BY CUSTOMER IN EACH RESPECTIVE ROOM (i.e., CASSETTE STORAGE, ILLUMINATORS, CABINETS, SINKS AND COUNTER SPACE). PLEASE CONSULT WITH CUSTOMER WITH REGARDS TO DESIRED CONVENIENCES.
6. THE SUPPLY VOLTAGE MUST REMAIN RELATIVELY STABLE. ELECTRICAL POWER FOR X-RAY EQUIPMENT REQUIRES VERY LARGE CURRENTS FOR EXTREMELY SHORT TIMES. REFER TO ELECTRICAL NOTES. GROUNDING MUST CONFORM TO THE CURRENT REQUIREMENTS FOR ELECTRICALLY SUSCEPTIBLE PATIENT AREAS.
7. VIEWING WINDOW TO BE 1/16" LEAD EQUIVALENT. RECOMMEND LARGE VIEWING WINDOWS TO BE TILTED 7° TO HELP ELIMINATE GLARE. IF TILTED 7° VIEWING WINDOW IS ACRYLIC, PROVIDE A SINGLE SHEET OF PLATE GLASS ON BOTH SIDES TO HELP PREVENT SCRATCHING.
8. NO ATTENTION HAS BEEN GIVEN TO SPECIFIC PLUMBING OR HVAC CONSIDERATIONS AFFECTED BY THE SCOPE OF THIS WORK. ENGINEERING DRAWINGS TO BE DONE BY OTHERS. ELECTRICAL AND MECHANICAL DESIGNERS SHALL BE REQUIRED TO REVIEW THESE DRAWINGS TO HELP THEM GAIN AN UNDERSTANDING OF THE CONCEPT OF THIS WORK AND TO HELP MINIMIZE CONFLICTING CONSTRUCTION EFFORTS. NO ATTENTION HAS BEEN GIVEN TO SPECIFIC BUILDING STRUCTURAL INTEGRITY. A PROFESSIONAL STRUCTURAL ENGINEER SHALL INSPECT FIELD CONDITIONS TO ENSURE THAT THE FACILITY SUPPORT STRUCTURE (e.g. WALLS, FLOORS, CEILINGS) CAN PROVIDE ADEQUATE SUPPORT FOR THE DIAGNOSTIC IMAGING EQUIPMENT DESCRIBED IN THE EQUIPMENT SCHEDULE. NO ATTENTION HAS BEEN GIVEN TO SPECIFIC SEISMIC ANCHORAGE CONSIDERATIONS AFFECTED BY THE SCOPE OF THIS WORK. ALL EXPENSES ASSOCIATED WITH SEISMIC TESTING AND COMPLIANCE SHALL BE THE RESPONSIBILITY OF THE CUSTOMER (END USER) OR THEIR RESPECTIVE CONTRACTORS OF CHOICE. IT IS STRONGLY RECOMMENDED THAT THE CUSTOMER CONSULTS WITH A PROFESSIONAL STRUCTURAL ENGINEER FAMILIAR WITH ALL PREVAILING SEISMIC REQUIREMENTS. ENGINEERING DRAWINGS BY OTHERS.
9. THE EQUIPMENT REPRESENTATIVES MUST APPROVE DEVIATION FROM THESE PLANS IN WRITING PRIOR TO ANY CHANGES.

Equipment & Data Services Sheet ***Equipment No:*** **ME25**

WIRING NOTES

ELECTRICAL CONTRACTOR SHALL FURNISH AND INSTALL ALL CONDUITS, WIRE, WIREWAYS, DISTRIBUTION TRANSFORMERS, JUNCTION BOXES, ENCLOSURES, CIRCUIT BREAKERS, ETC.

ALL WIRES TO BE THHN TYPE, STRANDED COPPER UNLESS OTHERWISE SPECIFIED. THE ELECTRICAL CONTRACTOR SHALL SUPPLY LUG PAIRS OF #8 OR GREATER FOR ALL CABLES LISTED WITHIN THE SCOPE OF THIS WORK.

CONDUIT AND DUCT RUNS ARE SHOWN SCHEMATICALLY. ACTUAL BUILDING CONDITIONS WILL DETERMINE CONDUIT AND DUCT ROUTES. CONDUIT TURNS TO HAVE LARGE SWEEPING BENDS WITH MINIMUM RADIUS AS SPECIFIED IN NEC ART. 346-10. IF LARGE BENDS IN CONDUIT ARE NOT POSSIBLE, USE SERVICE ENTRANCE ELBOW CONNECTORS TO AVOID DAMAGE TO CABLE.

ELECTRICAL CONTRACTOR TO PROVIDE 10'-0" TAILS FOR ALL WIRES UNLESS OTHERWISE SPECIFIED AND IDENTIFY BOTH ENDS OF ALL WIRES. ELECTRICAL CONTRACTOR SHALL MAKE EVERY EFFORT TO ENSURE THAT POINT TO POINT CONDUIT RUNS ARE AS SHORT AS FIELD CONDITIONS ALLOW. NEVER LEAVE 'HOT' WIRES CURLED IN PULL BOXES.

LEAVE PULL WIRE IN EMPTY CONDUITS.

WORK SHALL COMPLY WITH REGULATORY AGENCIES OF JURISDICTION. ALL SUCH AGENCIES SUPERSEDE THESE DRAWINGS AND MUST BE ADHERED TO. THE ELECTRICAL CONTRACTOR SHALL BE RESPONSIBLE FOR SCRUTINIZING THESE DRAWINGS AND SHALL MAKE CORRECTIONS ACCORDING TO PREVAILING CODES.

NOTE: CONDUITS MAY BE INCREASED IN SIZE BUT NEVER DECREASED WITHOUT CONSENT FROM THE EQUIPMENT REPRESENTATIVES. ELECTRICAL CONTRACTOR SHALL BE RESPONSIBLE FOR INSTALLING THE PATIENT GROUNDING NETWORK PER NATIONAL ELECTRIC CODE ARTICLE 517 AND NFPA 70.

ALL CONDUIT SHALL BE RIGID TYPE UNLESS SPECIFIED OTHERWISE IN THIS DRAWING SET. ALL CONDUIT RUNS EXPOSED TO WET ENVIRONMENTS SHALL BE MADE LIQUID TIGHT (e.g. UNDERGROUND, ETC.).

ALL FLUSH MOUNTED ELECTRICAL BOXES AND WIRE TROUGHS SHALL HAVE OVERSIZED COVER PLATES. ALL FLUSH MOUNTED ELECTRICAL BOXES AND WIRE TROUGHS EXPOSED TO A WET ENVIRONMENT SHALL BE MADE LIQUID TIGHT (e.g. IN FLOOR, ETC.).

THE ELECTRICAL CONTRACTOR SHALL INSTALL, PROVIDE POWER TO, AND CONNECT THE FOLLOWING, IF SPECIFIED FOR THIS PROJECT.
[ ]"X-RAY IN USE" WARNING SIGN; [ ]CCTV MONITOR WALL DISCONNECT BOX CONTAINING A 120VAC, 15AMP RECEPTACLE AND A VIDEO / DATA CONNECTOR; [ ]DOOR INTERLOCK SWITCH; [ ]EMERGENCY OFF SWITCH; [ ]120VAC DUPLEX OUTLETS FOR SERVICE AND HOUSEKEEPING DESCRIBED IN 'GENERAL NOTES' ITEM #6.
THE ELECTRICAL CONTRACTOR SHALL COORDINATE WITH THE FACILITY AND THE EQUIPMENT SUPPLIER / INSTALLERS REGARDING SPECIFIC INSTALLATION DETAILS. REFER TO ASSOCIATED BLOCK DIAGRAMS AND DETAILS.

Equipment & Data Services Sheet ***Equipment No:*** **ME25**

SAMPLE LAYOUT

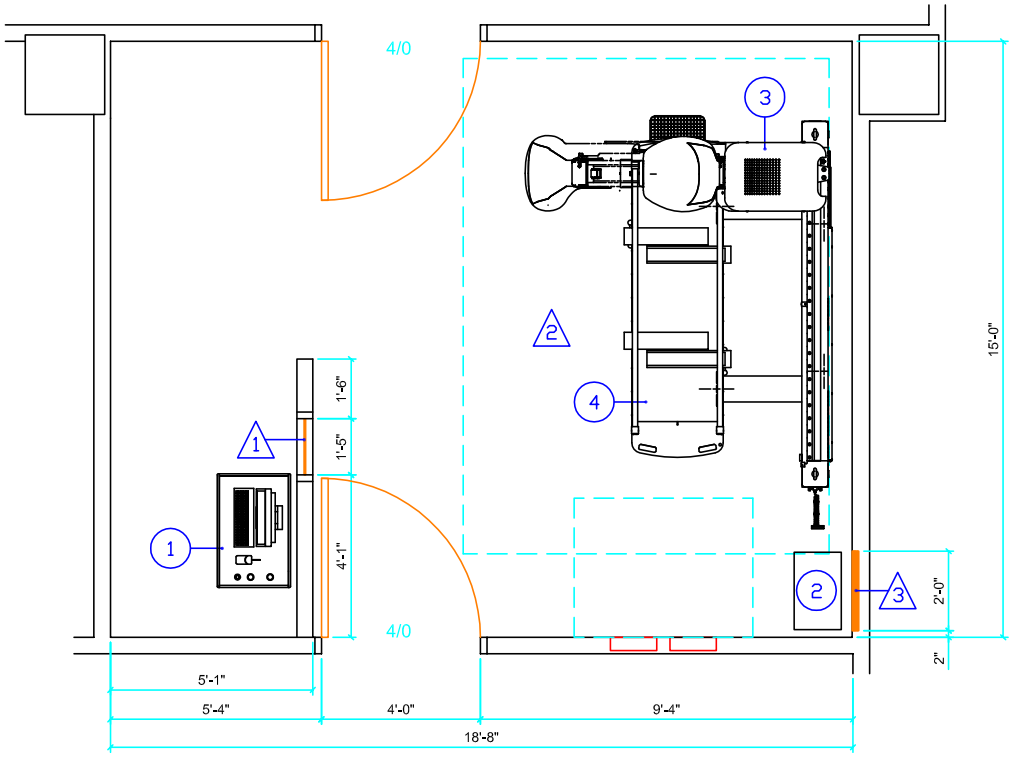

PROPOSED EQUIPMENT LAYOUT 1
(RECOMMENDED FINISHED CEILING HEIGHT 9'-0" A.F.F.)

CONSTRUCTION NOTES

(CONTRACTOR FURNISHED - CONTRACTOR INSTALLED)

1. CONSTRUCT CONTROL BOOTH PARTITION FROM FLOOR TO CEILING WHERE SHOWN. PROVIDE ONE LEADED WINDOW AND FRAME. LOCATE WINDOW CENTER LINE 5'-0" A.F.F. CONSULT WITH A CERTIFIED RADIOLOGICAL PHYSICIST REGARDING SHIELDING REQUIREMENTS. CONSULT CUSTOMER FOR WINDOW SIZE. WORKING DRAWINGS BY ARCHITECT.

2. THE MINIMUM RECOMMENDED FINISHED CEILING HEIGHT IS 9'-0" A.F.F. THE FLOOR IN THE X-RAY ROOM MUST BE LEVEL TO WITHIN ±1/8" OVER A 10'-0" SPAN.

3. PROVIDE A WALL SUPPORT HIDDEN IN WALL WERE SHOWN FOR THE GENERATOR RACK CABINET. GENERATOR RACK CABINET SHALL BE MOUNTED FROM BOTTOM OF RACK CABINET TO 24" A.F.F. REFER TO SUPPORT NOTES AND THE WALL MOUNTING BRACKET DETAIL.

Equipment & Data Services Sheet ***Equipment No:*** **ME25**

EQUIPMENT SCHEDULE

EQUIPMENT IDENTIFICATION NUMBER	BTU / HOUR	DESCRIPTION	WEIGHT (LBS.)	DIMENSIONS (IN.) W	x D	x H	
1	132	LODOX STATSCAN VE 1 DIGITAL X-RAY SMALL OPERATOR CONSOLE		34.33	22.16	59.29	133
2	1200	LODOX STATSCAN VE 1 DIGITAL X-RAY GENERATOR RACK (WALL MOUNTED)		23.31	14.17	27.16	133
3	2668	LODOX STATSCAN VE 1 DIGITAL X-RAY SCANNER		111.18	91.57	90.98	2668
4	N/A	LODOX STATSCAN VE 1 DIGITAL X-RAY TROLLEY		32.28	103.13	32.02	177

EQUIPMENT DATA

TEMPERATURE	+10 TO +35° CELSIUS
HUMIDITY	20% TO 80% NON-CONDENSING
ATMOSPHERE PRESSURE	ATMOSPHERE PRESSURE
IMAGE SIZE	540 hPa TO 1035 hPa
DETECTOR SYSTEM	680MM x 1800MM, FULL BODY. ADJUSTABLE FROM 100MM x 100MM TO FULL SIZE IN ANY POSITION ON THE PATIENT
DETECTOR	PROPRIETARY DETECTOR TECHNOLOGY (SIMULAR TO A SPIRAL CT DETECTOR TECHNOLOGY)
X-RAY TO LIGHT CONVERSION	RAREX GREEN FAST ("GADOX" ($GdOS_2$:TB))
CEILING HEIGHT	9'-0" A.F.F.
FINISHED FLOOR	MUST BE LEVEL TO WITHIN ±1/8" OVER A 10'-0" SPAN.

Equipment & Data Services Sheet ***Equipment No:*** **ME25**

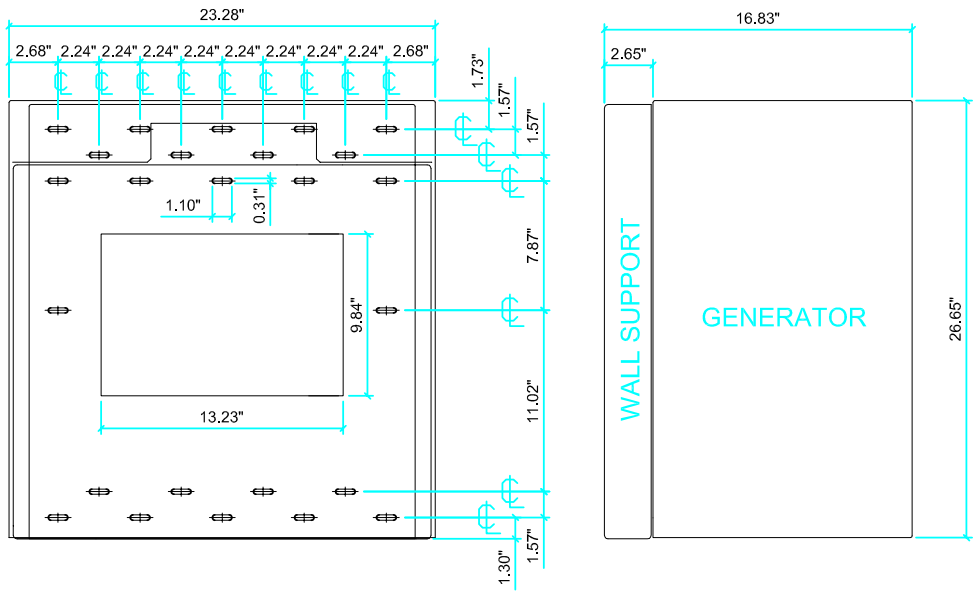

GENERATOR WALL MOUNTING DETAIL

(NOT TO SCALE)

Equipment & Data Services Sheet ***Equipment No:*** **ME25**

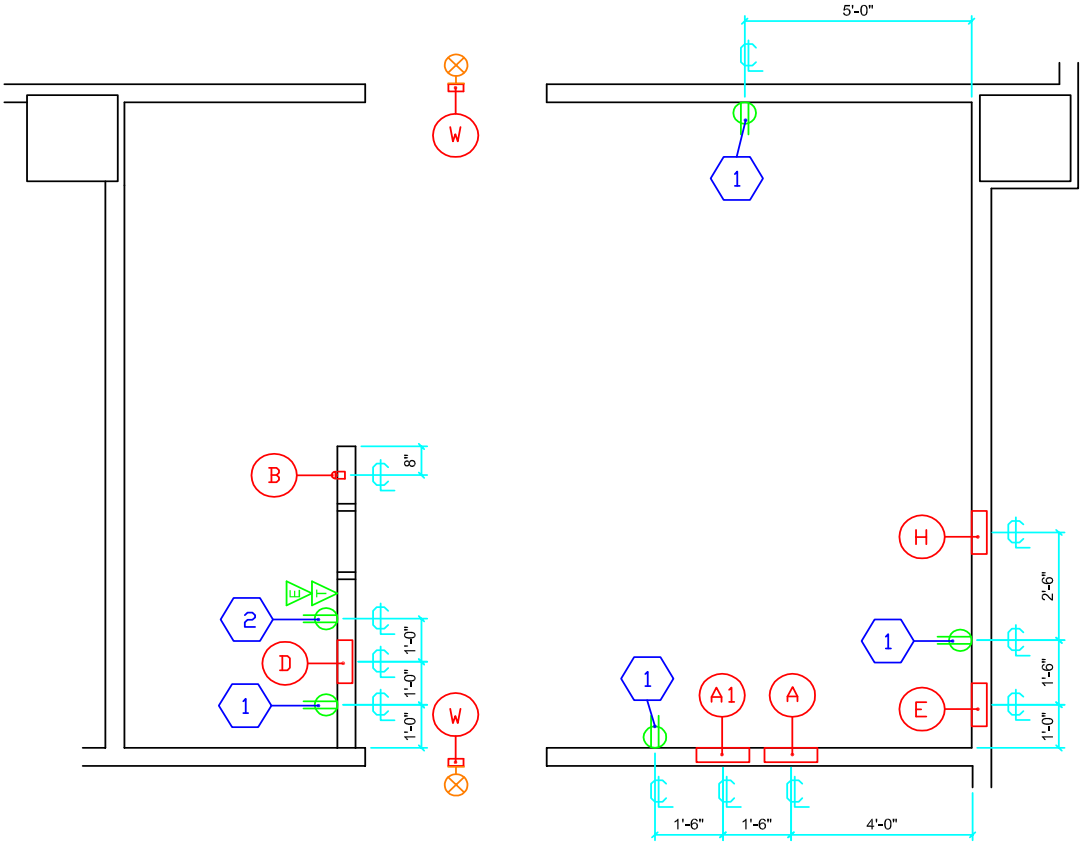

ELECTRICAL TAG DESCRIPTIONS

(CONTRACTOR FURNISHED - CONTRACTOR INSTALLED)

ITEM	DESCRIPTION
1	EC SHALL FURNISH AND INSTALL ONE HOSPITAL GRADE, THREE PRONG, 120VAC, 15AMP, DUPLEX RECEPTACLE. FLUSH MOUNT IN WALL WHERE SHOWN AT NORMAL HEIGHT. PROVIDES POWER FOR SERVICE AND HOUSE KEEPING. REQUIRES HOUSE POWER.
2	EC SHALL FURNISH AND INSTALL ONE HOSPITAL GRADE, THREE PRONG, 120VAC, 20AMP, QUADPLEX RECEPTACLE. FLUSH MOUNT IN WALL WHERE SHOWN 18" A.F.F. PROVIDES POWER FOR STATSCAN CONTROL STATION PC AND PERIPHERALS. REQUIRES HOUSE POWER.
T	PROVIDE A SINGLE TELEPHONE LINE WHERE SHOWN FOR CERTAIN SERVICE AND MAINTENANCE ACTIVITIES TO BE PERFORMED FROM A REMOTE LOCATION. THE RJ11 LINE MUST BE A DEDICATED DIRECT IN DIAL (DID) VOICE-GRADE (TELEPHONE LINE WHICH DOES NOT RUN THROUGH ANY FACILITY PBX, SWITCHBOARD OR A SHARED ACCESS LINE. THE TELEPHONE NUMBER MUST BE PROVIDED TO THE TECHNICIAN WHO INSTALLS THE SYSTEM.
E	PROVIDE AN ETHERNET CONNECTION WHERE SHOWN. EC SHALL CONSULT WITH END USER REGARDING TYPE OF CONNECTOR (e.g.. RJ-45/CAT-5, FIBER OPTICS, BNC/COAX, ETC.). REFER TO DICOM NOTES. PROVIDE ALL HARDWARE NECESSARY INCLUDING COVER PLATES, CONNECTORS AND INTERCONNECTING CABLES. NOTE: ETHERNET CONNECTION SHOULD HAVE INTERNET ACCESS WITH VPN CAPABILITY.

Equipment & Data Services Sheet ***Equipment No:*** **ME25**

Sample info from a different project

TERMINAL SCHEDULE

(CONTRACTOR FURNISHED - CONTRACTOR INSTALLED)

ITEM	DESCRIPTION
	FACILITY TO DETERMINE SOURCE LOCATION. SOURCE SHALL BE 480VAC, 80KVA, DELTA OR WYE PREFERRED.
A	NEMA 1, 480VAC, THREE PHASE, FRONT OPERATED, CIRCUIT BREAKER ENCLOSURE WITH GROUND ACCESSORIES. ENCLOSURE SHALL CONTAIN ONE 75AMP, 3-POLE THERMOMAGNETIC CIRCUIT BREAKER WITH SHUNT TRIP DEVICE. FLUSH MOUNT IN WALL WHERE SHOWN. LOCATE TOP OF ENCLOSURE 6'-0" A.F.F. NOTE: EC SHALL ENSURE THAT LUGS ARE LARGE ENOUGH TO FACILITATE OVERSIZED INCOMING CABLES REQUIRED BY X-RAY EQUIPMENT. REFER TO "INCOMING WIRE SIZE" NOTES.
A1	NEMA 1, 208/120VAC, SINGLE PHASE, FRONT OPERATED, CIRCUIT BREAKER ENCLOSURE WITH NEUTRAL AND GROUND ACCESSORIES. ENCLOSURE SHALL CONTAIN ONE 20AMP, 2-POLE THERMOMAGNETIC CIRCUIT BREAKER. EC SHALL LABEL CB AS "SCANNER" POWER. FLUSH MOUNT IN WALL WHERE SHOWN. LOCATE TOP OF ENCLOSURE 6'-0" A.F.F.
B	4" x 2" x 2" DEEP SWITCH BOX. FLUSH MOUNT IN WALL WHERE SHOWN. LOCATE BOX CENTER LINE AT 6'-0" A.F.F. EC SHALL PROVIDE ONE NORMALLY OPEN SWITCH WITH RED MUSHROOM HEAD AND AN "EMERGENCY OFF" NAME PLATE.SWITCH WILL BE USED FOR SHUNT TRIP DEVICE LOCATED ON CIRCUIT BREAKER <A>.
D	12" x 12" x 4" DEEP JUNCTION BOX. FLUSH MOUNT IN WALL WHERE SHOWN. LOCATE ENCLOSURE CENTER LINE 12" A.F.F. PROVIDE A COVER PLATE AS SHOWN IN COVER PLATE DETAILS. PROVIDES ACCESS TO THE STATCAN CONTROL STATION PC.
E	12" x 12" x 4" DEEP JUNCTION BOX. FLUSH MOUNT IN WALL WHERE SHOWN. LOCATE ENCLOSURE CENTER LINE 37" A.F.F. PROVIDE A COVER PLATE AS SHOWN IN COVER PLATE DETAILS. PROVIDES ACCESS TO THE STATSCAN GENERATOR RACK.
H	12" x 12" x 4" DEEP JUNCTION BOX. FLUSH MOUNT IN WALL WHERE SHOWN. LOCATE ENCLOSURE CENTER LINE 14" A.F.F. PROVIDE A COVER PLATE AS SHOWN IN COVER PLATE DETAILS. PROVIDES ACCESS TO THE STATSCAN SCANNER.
W	4" x 4" x 2" JUNCTION BOX FOR THE "X-RAY IN USE" WARNING SIGN. FLUSH MOUNT IN WALL OR CEILING. EXACT LOCATION TO BE DETERMINED BY THE FACILITY. THE X-RAY ON WARNING LAMP CIRCUIT SHALL BE COORDINATED BETWEEN THE FACILITY, THE CONSTRUCTION PARTICIPANTS AND THE EQUIPMENT INSTALLERS. REFER TO WIRING DIAGRAM

Equipment & Data Services Sheet ***Equipment No:*** **ME25**

ELECTRICAL BLOCK DIAGRAM

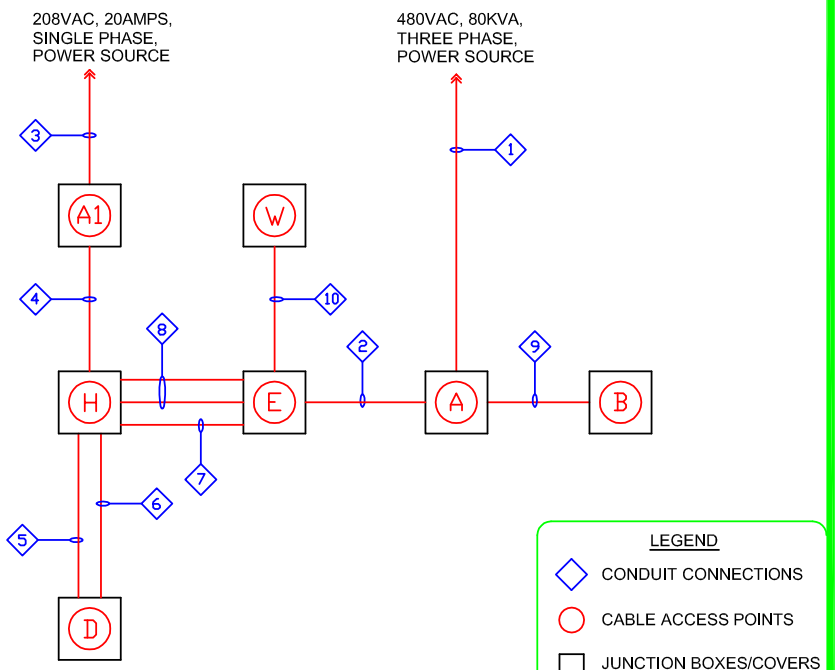

LEGEND

- CONDUIT CONNECTIONS
- CABLE ACCESS POINTS
- JUNCTION BOXES/COVERS
- TROUGH (WALL DUCT) OR RACEWAY
- INCOMING POWER

INCOMING WIRE SIZE NOTES

(CONTRACTOR FURNISHED - CONTRACTOR INSTALLED)

LISTED BELOW IS THE RELATIONSHIP BETWEEN THE LENGTH AND SIZE OF EACH INCOMING WIRE,
WITH THE ASSUMPTION THAT THE POWER SOURCE HAS THE REQUIRED CAPACITY.
THE VOLTAGE REGULATION UNDER LOAD VARIATION IS CALCULATED TO BE WITHIN ±5%.
BE SURE TO USE WIRE SIZES INDICATED OR GREATER.

X-RAY GENERATOR:	SEDECAL SHF-645 64kW
RECOMMENDED POWER TO THE MAIN DISCONNECT:	480VAC, THREE PHASE, 80KVA, WYE OR DELTA
MAIN CIRCUIT BREAKER:	75AMP, 3-POLE WITH SHUNT TRIP DEVICE
MAXIMUM MOMENTARY:	110 AMPS
LINE IMPEDANCE:	0.20 OHMS

PROVIDE THE APPROPRIATE WIRE SIZE FROM POWER SOURCE TO MAIN DISCONNECT:

WIRE LENGTH	<50'	<100'	<150'	<200'
FEEDER SIZE				
LINE:	#2AWG	#2/0AWG	#3/0AWG	#250MCM
NEUTRAL:	NEUTRAL NOT REQUIRED - SEE NOTE BELOW			
GROUND:	#2AWG	#2/0AWG	#3/0AWG	#250MCM

NEUTRAL NOTE:
THE GENERATOR DOES NOT NEED A NEUTRAL WIRE TO FUNCTION PROPERLY. A WYE SOURCE IS PREFERRED FOR GOOD VOLTAGE REGULATION .

Equipment & Data Services Sheet ***Equipment No:*** **ME25**

RACEWAY & WIRING SCHEDULE

(CONTRACTOR FURNISHED - CONTRACTOR INSTALLED)

RUN #	FROM	TO	SIZE	REMARKS
1	480VAC, 3-PHASE SOURCE	A	VARIES	CONDUIT SIZE DEPENDS ON INCOMING WIRE SIZE. REFER TO "INCOMING WIRE SIZE" NOTES. EC TO CONNECT AT BOTH ENDS.
2	A	E	1 1/2" CONDUIT	WIRE SIZE TO BE DETERMINED BY "INCOMING WIRE SIZE" NOTES; 50' LENGTH. EC TO CONNECT AT <A> AND TERMINATE CABLES AT <E> WITH ILSCO CLEAR SPLICE CONNECTORS (PART NUMBER SPAR-1/0).
3	208VAC, 1-PHASE SOURCE	A1	3/4" CONDUIT	2-#12AWG PLUS 1-#12AWG NEUTRAL AND GROUND. EC SHALL CONNECT TO 20AMP, MAIN IN (A1) AND TO 208/120VAC, 1-PHASE POWER SOURCE.
4	A1	H	3/4" CONDUIT	2-#12AWG PLUS 1-#12AWG NEUTRAL AND GROUND. EC SHALL CONNECT TO 20AMP, 2P, CB IN (A1) (STATSCAN) AND LEAVE 10'-0" TAILS AT <H>. EC SHALL IDENTIFY WIRES AS "STATSCAN" POWER.
5	D	H	2" CONDUIT	EMPTY CONDUITS. LEAVE PULL STRINGS.
6	D	H	3/4" CONDUIT	EMPTY CONDUIT. LEAVE PULL STRINGS.
7	E	H	3" CONDUIT	EMPTY CONDUIT. LEAVE PULL STRINGS.
8	E	H	TWO 2" CONDUITS	EMPTY CONDUIT. LEAVE PULL STRINGS.
9	B	A	1/2" CONDUIT	2-#14AWG PLUS GROUND. EC SHALL CONNECT TO (A) AND (B). PROVIDE POWER IF NECESSARY FOR SHUNT TRIP SOLENOID.
10	W	E	1/2" CONDUIT	2-#14AWG PLUS GROUND. EC SHALL CONNECT TO "X-RAY IN USE" WARNING SIGN AT BOX (W) AND LEAVE TAILS AT (E). EC SHALL IDENTIFY WIRES AS "XRAY WARNING SIGN". CONSULT WITH THE EQUIPMENT INSTALLERS REGARDING POWER SOURCE.

THE ELECTRICAL CONTRACTOR SHALL FURNISH AND INSTALL ONE #8AWG GREEN EQUIPMENT GROUND WIRE BETWEEN ALL X-RAY EQUIPMENT. CONSULT WITH THE LOCAL X-RAY EQUIPMENT REPRESENTATIVE REGARDING CENTRAL GROUND POINT LOCATION.

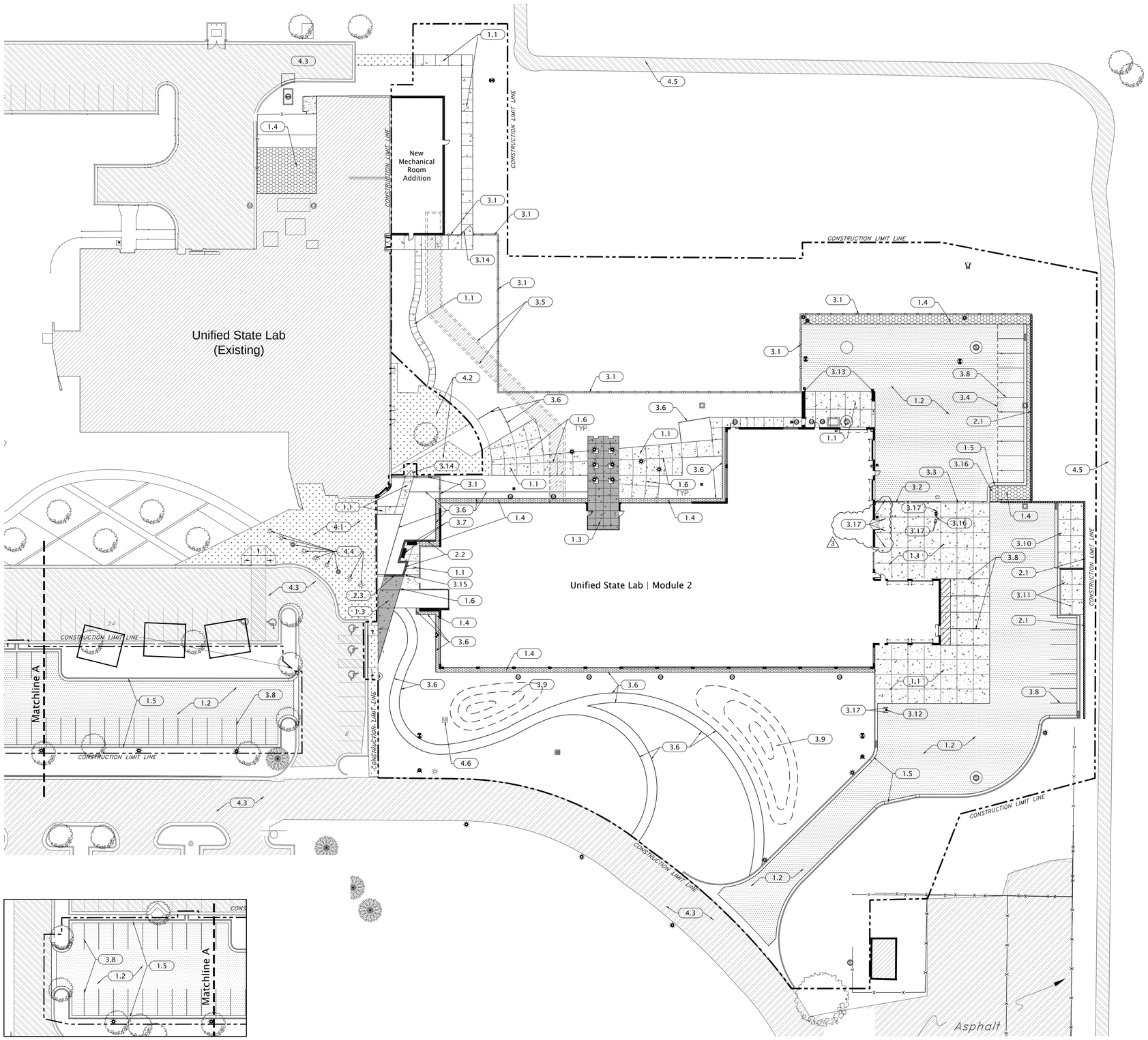

1 LS101 SITE CALLOUT PLAN
1" = 30'-0"

0 15' 30' 60' 120'

NORTH

SHEET INFORMATION

#	CALLOUT	DETAIL/SHEET
1.0	PAVEMENTS AND WALKS	
1.1	Concrete Paving	See Civil Plans
1.2	Asphalt Paving	See Civil Plans
1.3	Colored Concrete Paving	See Civil Plans
1.4	Rock Mulch	See Civil Plans
1.5	Concrete Curb and Gutter	See Civil Plans
1.6	Concrete Paving Joints, typ.	See Civil Plans
2.0	SITE WALLS	
2.1	Wall #1	See Architecture Plans
2.2	Wall #2	3-7 / LS600
2.3	Sign Wall	6,8-9 / LS600
3.0	SITE ELEMENTS	
3.1	New Fence w/ Concrete Mow Curb (to match existing)	1-7 / LS601
3.2	Fence	See Civil Plans
3.3	Fence Sliding Roll Gate	See Civil Plans
3.4	Covered Parking	See Architecture Plans
3.5	New Utility Tunnel Outline	See Mechanical Plans
3.6	Metal Landscape Edging	1 / LS600
3.7	Seat Bench	10 / LS600
3.8	Parking Lot Line Striping	See Civil Plans
3.9	Landscape Berm	See Civil Plans
3.10	Emergency Generator	See Electrical Plans
3.11	Transformer	See Electrical Plans
3.12	Push-To-Talk Pedestal	See Electrical Plans
3.13	Building Column	See Architecture Plans
3.14	Fence Gate	4-5/ LS601
3.15	ADA operator/Card Reader/Knox Box Bollard	See Electrical Plans
3.16	Card Reader Pedestal	See Electrical Plans
3.17	Bollard	See Civil Plans
4.0	EXISTING SITE ELEMENTS (TO REMAIN)	
4.1	Existing Concrete Paving	
4.2	Existing Concrete Courtyard	
4.3	Existing Ashpalt Paving	
4.4	Existing Bollards	
4.5	Existing Trail	
4.6	Existing Transformer	

LEGEND:

- Proposed Site Element
- Existing Site Element (To Remain)
- Existing Building
- Proposed Construction Limit Line
- Existing Tree (to remain)
- Existing Concrete Paving (to remain)
- Existing Asphalt Paving (to remain)
- Proposed Concrete Paving - Standard Color
- Proposed Concrete Colored Paving
- Proposed Asphalt Paving
- Proposed Rock Mulch

CRSA
649 E. South Temple
Salt Lake City, UT 84102
801.355.5915

MWL
11798 N. Lakeridge Pkwy.
Ashland, VA 23005
804-228-7473

State of Utah
Department of Administrative Services
Division of Facilities Construction & Management
4110 State Office Building
Salt Lake City, Utah 84114
Phone: (801) 538 - 3018
Fax: (801) 538 - 3267

DFCM APPROVAL STAMP

LICENSED LANDSCAPE ARCHITECT
JOHN KELLY GILLMAN
04122634-5301
STATE OF UTAH

01-28-2014
ARCHITECT-ENGINEER STAMP

Unified State Laboratory Module 2

4451 South 2700 West,
Taylorsville, UT 84118

DFCM #: 13020300

Project #: B13-024

DATE:	ISSUE TYPE:
April 21, 2014	BID SET
May 21, 2015	ADD # 3

CHECKED BY	KG
DRAWN BY	DL

SITE CALLOUT PLAN

LS101

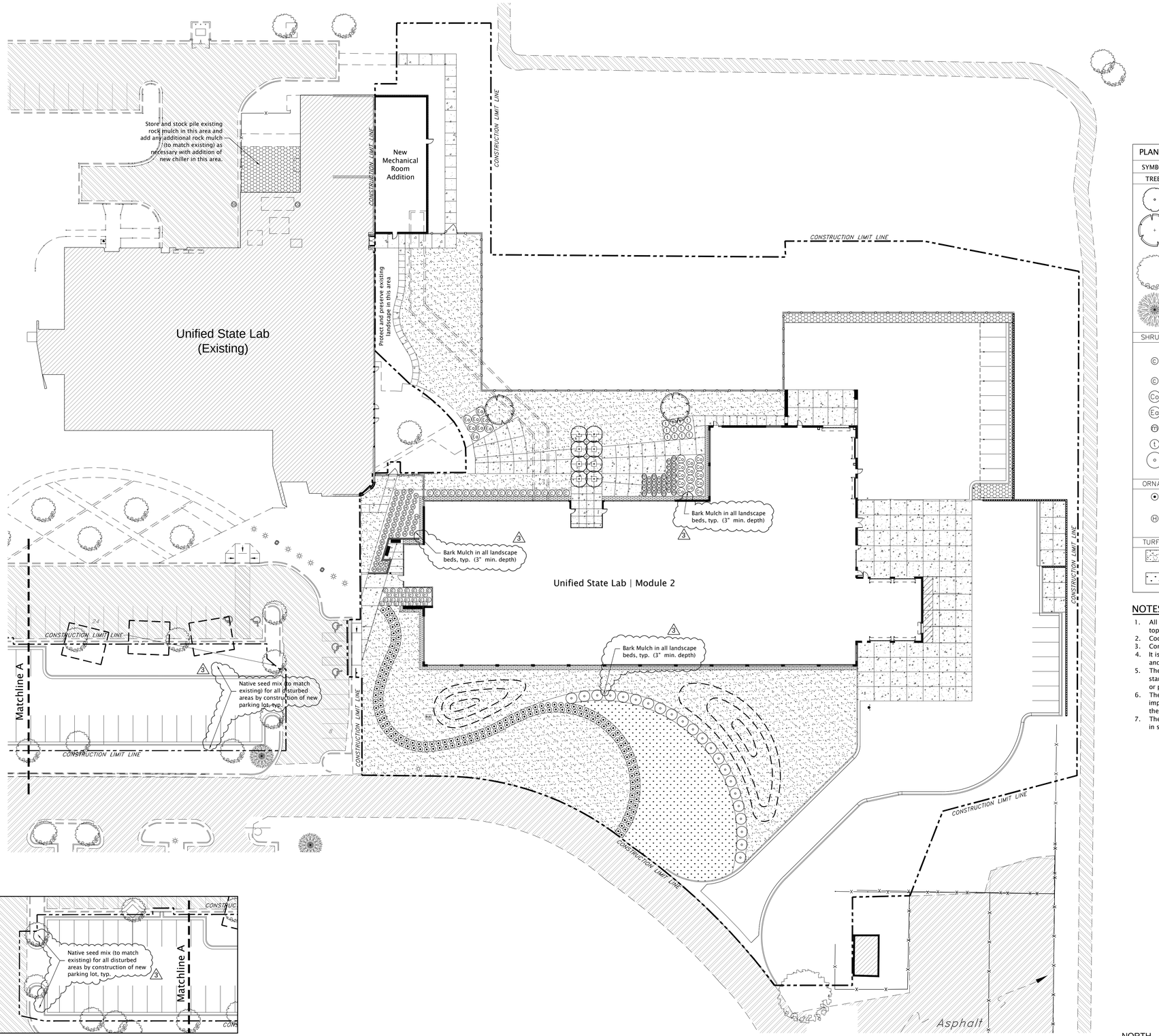

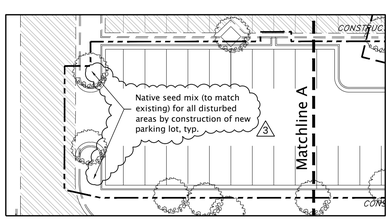

1 LS401 SITE PLANTING PLAN
1" = 30'-0"

PLANT SCHEDULE

SYMBOL	BOTANICAL NAME	COMMON NAME	SIZE
TREES			
	Acer platanoides 'Crimson Sentry'	Crimson Sentry Maple	2" cal.
	Carpinus betulus 'Franz Fontaine'	Franz Fontaine Hornbeam	2" cal.
	Existing Trees (To Remain), typ.		
SHRUBS			
C	Berberis thunbergii atropurpurea 'Crimson Pygmy'	Crimson Pygmy Barberry	5 Gal.
C	Cornus alba 'Cream Cracker'	Cream Cracker Dogwood	5 Gal.
Co	Cornus alba 'Bailhalo'	Ivory Halo Dogwood	5 Gal.
Ea	Euonmyus alatus compacta	Dwarf Burning Bush	5 Gal.
M	Mahonia aquifolium 'Compacta'	Compact Oregon Grape	5 Gal.
L	Prunus laurocerasus 'Otto Luykens'	Otto Luykens Laurel	5 Gal.
	Viburnum burkwoodii	Burkwood Viburnum	5 Gal.
ORNAMENTAL GRASSES			
	Calamagrostis x acutiflora 'Karl Foerster'	Karl Foerster Grass	5 Gal.
H	Pennisetum alopecuroides 'Hameln'	Hameln Fountain Grass	3 Gal.
TURF GRASS			
	BellaBlue® Sod	Bio Grass Sod Farms, Sandy, UT	--
	BioMeadow® Sod (less mowing variety)	Bio Grass Sod Farms, Sandy, UT	--

NOTES:

1. All planting beds to be lined with commercial grade weed barrier fabric and topped with landscape mulch.
2. Coordinate all plantings with utility plan. Adjust trees as necessary.
3. Contractor to verify size and quantities of plant schedule.
4. It is the contractor's responsibility to verify the depth and location of existing and proposed utilities.
5. The contractor shall thoroughly investigate and locate all utilities prior to the start of construction. The contractor shall repair any damage to the existing or proposed utilities caused during construction.
6. The contractor shall be responsible for the restoration of any existing improvements that are damaged during construction to the satisfaction of the Owner.
7. The contractor shall take the necessary measures to avoid dust, debris, mud in streets, and erosion onto adjacent properties and into storm drains.

CRSA
649 E. South Temple
Salt Lake City, UT 84102
801.355.5915

MWL
11798 N. Lakeridge Pkwy.
Ashland, VA 23005
804-228-7473

State of Utah
Department of Administrative Services
Division of Facilities Construction & Management
4110 State Office Building
Salt Lake City, Utah 84114
Phone: (801) 538 - 3018
Fax: (801) 538 - 3267

DFCM APPROVAL STAMP

REGISTERED LANDSCAPE ARCHITECT JOHN KELLY GILLMAN 04012054-5301 STATE OF UTAH
01-28-2014
ARCHITECT-ENGINEER STAMP

Unified State Laboratory Module 2

4451 South 2700 West, Taylorsville, UT 84118

DFCM #: 13020300

Project #: B13-024

DATE:	ISSUE TYPE:
April 21, 2014	BID SET
May 21, 2015	ADD # 3

CHECKED BY	KG
DRAWN BY	DIL

SITE PLANTING PLAN

LS401

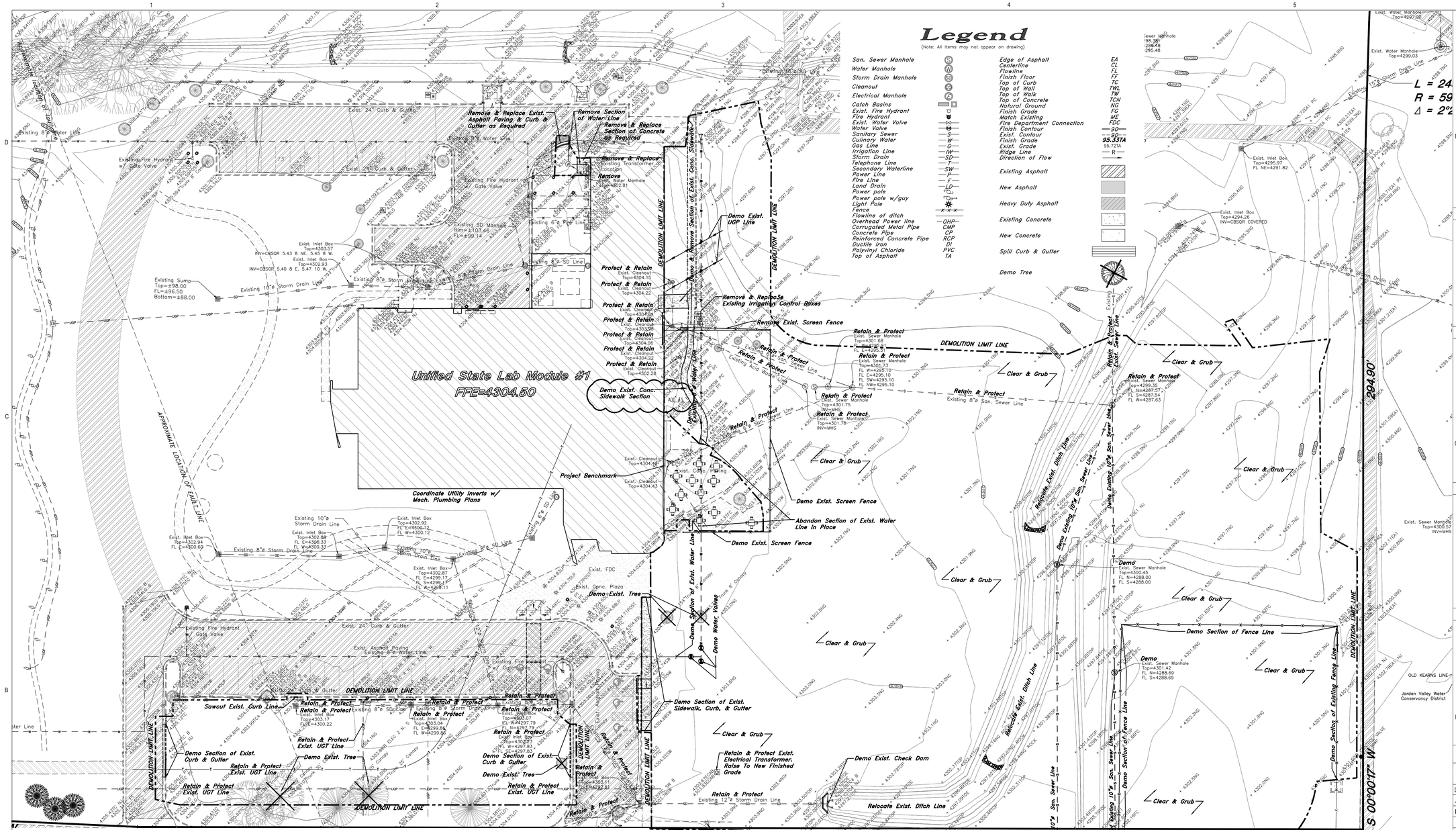

General Demolition Notes:

1. Demolition and site clearing for this contract are to include all areas shown within demolition limits or by note.
2. Refer to site improvement plans for more details on limits of removal.
3. Demolish existing buildings and clear from site. (Including removal of all footings and foundations.)
4. All curbs, gutters, walks, slabs, walls, fences, flatwork, asphalt, waterlines and meters, gas lines, sewer lines, light poles, buried cables, storm drain piping and structures to be cleared from site unless otherwise shown.
5. All utilities, sewer, water, gas, telephone and electrical services to be disconnected and capped According to city, county and utility company requirements, unless otherwise shown.
6. Basements and other excavated areas to be backfilled with clean granular material compacted to 95% of maximum lab density as determined by ASTM D 1557–78. (Test results to be given to owner)
7. Clear and grub trees, shrubs, and vegetation within construction limits, disposal to be off–site Except where noted otherwise.
8. DO NOT interrupt any services or disrupt the operation of any businesses shown outside the demolition limits.
9. If ASBESTOS is found in existing structures, the Asbestos must be removed in a legal manner by a contractor licensed to handle asbestos materials. (Not a part of contract)
10. Remove debris, rubbish, and other materials resulting from the demolition and site clearing operations from the site and dispose of in a legal manner.
11. The location and/or elevation of existing utilities as shown on these plans is based on records of the various utility companies and, where possible, measurements taken in the field. The information is not to be relied upon as being exact or complete. Contractor shall contact authorities having jurisdiction for field locations. Contractor shall be responsible for protection of in place and relocated utilities during construction.
12. Stockpiles shall be graded to maintain slopes not greater than 3 horizontal to 1 vertical. Provide erosion control as needed to prevent sediment transport to adjacent drainage ways.
13. Contractor shall be responsible for disposal of all waste material. Disposal shall be at an approved site for such material. Burning onsite is not permitted.
14. Contractor shall verify with city any street removal, curb cuts, and any restoration required for utility line removal.
15. Install traffic warning devices as needed in accordance with local standards.
16. Contractor shall obtain all permits necessary for demolition from City, County, State or Federal Agencies as required.

CAUTION NOTICE TO CONTRACTOR

The contractor is specifically cautioned that the location and/or elevation of existing utilities as shown on these plans are based on records of the various utility companies and, where possible, measurements taken in the field. The information is not to be relied on as being exact or complete. The contractor must call the appropriate utility company at least 48 hours before any excavation to request exact field location of utilities. It shall be the responsibility of the contractor to relocate all existing utilities which conflict with the propose improvements shown on the plans.

PRIVATE ENGINEER'S NOTICE TO CONTRACTORS

The Contractor agrees that he shall assume sole and complete responsibility for job site conditions during the course of construction of this project, including safety of all persons and property: that this requirement shall apply continuously and not be limited to normal working hours; and that the contractor shall defend, indemnify, and hold the owner and the engineer harmless from any and all liability, real or alleged, in connection with the performance of work on this project, excepting for liability arising from the sole negligence of the owner or the engineer.

CRSA
649 E. South Temple
Salt Lake City, UT 84102
801.355.5915

MWL
11798 N. Lakeridge Pkwy.
Ashland, VA 23005
804-228-7473

State of Utah
Department of Administrative Services
Division of Facilities Construction & Management
4110 State Office Building
Salt Lake City, Utah 84114
Phone: (801) 538 - 3018
Fax: (801) 538 - 3267

DFCM APPROVAL STAMP

PROFESSIONAL ENGINEER 7742907 ALBERT COURY MORRIS 4-21-14 STATE OF UTAH

ARCHITECT-ENGINEER STAMP

Unified State Laboratory Module 2

4451 South 2700 West, Taylorsville, UT 84118

DFCM #:	13020300
Project #:	B13-024

DATE:	ISSUE TYPE:
April 21, 2014	BID SET
May 21, 2015	ADDENDUM #3

CHECKED BY	C. MORRIS
DRAWN BY	R. CHILD

DEMOLITION PLAN

C000

VOLUME 1

C:\Users\lemando\Documents_A_13034_Modl_2013_lemando.rvt
1/31/2014 10:48:31 AM

W:\13N904 Unified State Labs Module #2\dwg\13N904-S4.dwg, 5/18/2015 2:13:24 PM, RebeccaC, 1:1

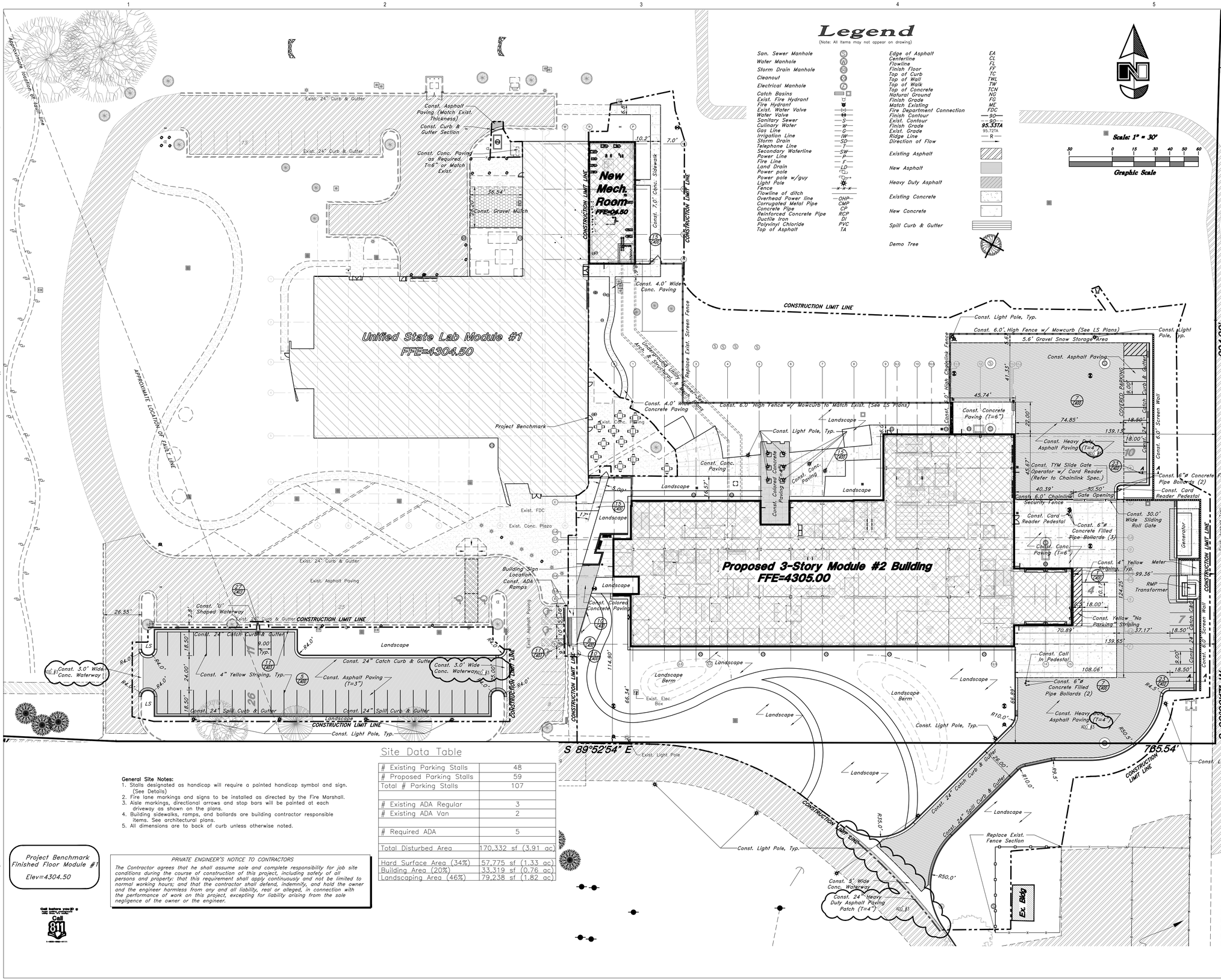

Site Data Table

# Existing Parking Stalls	48
# Proposed Parking Stalls	59
Total # Parking Stalls	107
# Existing ADA Regular	3
# Existing ADA Van	2
# Required ADA	5
Total Disturbed Area	170,332 sf (3.91 ac)
Hard Surface Area (34%)	57,775 sf (1.33 ac)
Building Area (20%)	33,319 sf (0.76 ac)
Landscaping Area (46%)	79,238 sf (1.82 ac)

General Site Notes:

1. Stalls designated as handicap will require a painted handicap symbol and sign. (See Details)
2. Fire lane markings and signs to be installed as directed by the Fire Marshall.
3. Aisle markings, directional arrows and stop bars will be painted at each driveway as shown on the plans.
4. Building sidewalks, ramps, and bollards are building contractor responsible items. See architectural plans.
5. All dimensions are to back of curb unless otherwise noted.

Project Benchmark
Finished Floor Module #1
Elev=4304.50

PRIVATE ENGINEER'S NOTICE TO CONTRACTORS

The Contractor agrees that he shall assume sole and complete responsibility for job site conditions during the course of construction of this project, including safety of all persons and property; that this requirement shall apply continuously and not be limited to normal working hours; and that the contractor shall defend, indemnify, and hold the owner and the engineer harmless from any and all liability, real or alleged, in connection with the performance of work on this project, excepting for liability arising from the sole negligence of the owner or the engineer.

Call before you dig
Call 811
1-800-662-4111

C:\Users\fernando\Documents_A_13024_Modl1_2013_fernando.rvt
1/31/2014 10:48:31 AM

W:\13N904 Unified State Labs Module #2\dwg\13N904-S4.dwg, 5/18/2015 2:15:24 PM, RebeccaC, 1:1

CRSA
649 E. South Temple
Salt Lake City, UT 84102
801.355.5915

MWL
11798 N. Lakeridge Pkwy.
Ashland, VA 23005
804-228-7473

State of Utah
Department of Administrative Services
Division of Facilities Construction & Management
4110 State Office Building
Salt Lake City, Utah 84114
Phone: (801) 538 - 3018
Fax: (801) 538 - 3267

DFCM APPROVAL STAMP

PROFESSIONAL ENGINEER 7742907 ALBERT COURY MORRIS 5-21-14 STATE OF UTAH

ARCHITECT-ENGINEER STAMP

Unified State Laboratory Module 2

4451 South 2700 West, Taylorsville, UT 84118

DFCM #:	13020300
Project #:	B13-024

DATE:	ISSUE TYPE:
April 21, 2014	BID SET
May 21, 2015	ADDENDUM #3
CHECKED BY	C. MORRIS
DRAWN BY	R. CHILD

SITE PLAN

C100

VOLUME 1

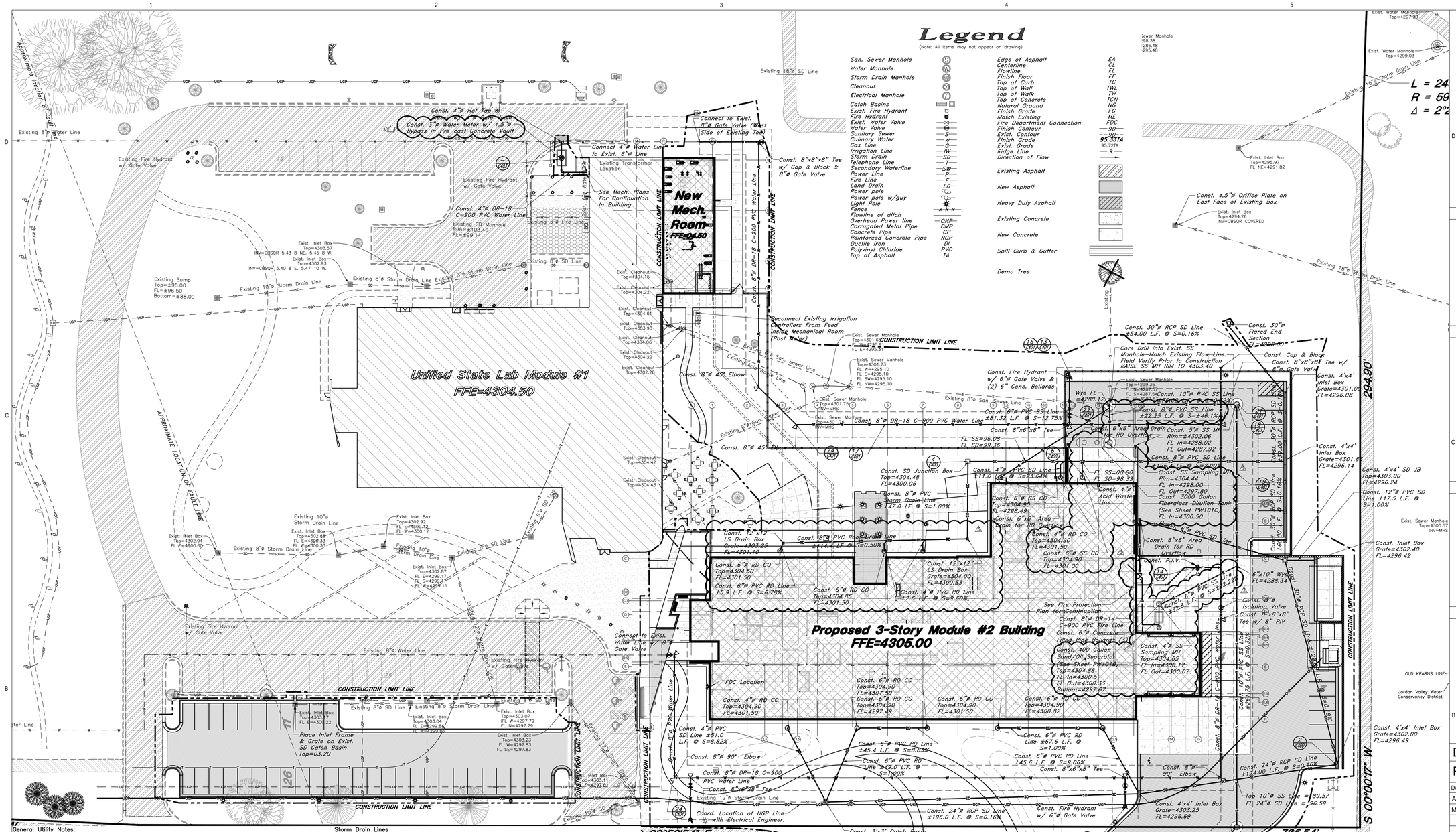

General Utility Notes:

1. Coordinate all utility connections to building with plumbing plans and building contractor.
2. Verify depth and location of all existing utilities prior to constructing any new utility lines. Notify Civil Engineer of any discrepancies or conflicts prior to any connections being made.
3. All catch basin and inlet box grates are to be bicycle proof.
4. All inlet boxes located in curb and gutter are to be placed parallel to the curb and gutter and set under the frame and grate. Improperly placed boxes will be removed and replaced at no additional cost to the owner. Precast or cast in place boxes are acceptable.
5. Refer to the site electrical plan for details and locations of electrical lines, transformers and light poles.
6. Gas lines, telephone lines, and cable TV lines are not a part of these plans unless otherwise noted.
7. Water meters are to be installed per city standards and specifications. It will be the contractor's responsibility to install all items required.
8. Water lines, valves, fire hydrants, fittings etc. are to be constructed as shown. Contractor is responsible to construct any vertical adjustments necessary to clear sewer, storm drain or other utilities as necessary including valve boxes and hydrant spools to proper grade.
9. Field verify all existing and/or proposed Roof Drain/Roof Drain down spout connections to Storm Water System with Civil, Plumbing & Architectural plans. Notify Engineer of any discrepancies.

Utility Piping Materials:
All piping to be installed per manufacturers recommendations. Refer to project specifications for more detailed information regarding materials, installation, etc.

Culinary Service Laterals
1. 3/4" to 2" diameter pipe – copper tube ASTM B, Type K, Soft Temper
2. Over 2" diameter pipe – AWWA C-900 Class 150 pipe

Water Main Lines and Fire Lines
1. Pipe material as shown on utility plan view or to meet city standards.

Sanitary Sewer Lines
1. All sewer piping to be Polyvinyl Chloride (PVC) sewer pipe, ASTM D 3034, Type PSM, SDR 35

Storm Drain Lines
1. 10" pipes or smaller – Polyvinyl Chloride (PVC) sewer pipe, ASTM D3034, Type PSM, SDR 35
2. 12" to 21" pipes – Concrete Pipe, ASTM C14, Class III up to 13' of cover. For greater than 13' feet of cover, use reinforced concrete pipe and classes listed below.
3. 24" pipes or larger – Reinforced Concrete Pipe, ASTM C76, Class III up to 13' of cover, Class IV for 13' to 21' of cover, Class V for 21' to 32' of cover, and Special Design for cover greater than 32 feet.

CAUTION NOTICE TO CONTRACTOR
The contractor is specifically cautioned that the location and/or elevation of existing utilities as shown on these plans are based on records of the various utility companies and, where possible, measurements taken in the field. The information is not to be relied on as being exact or complete. The contractor must call the appropriate utility company at least 48 hours before any excavation to request exact field location of utilities. It shall be the responsibility of the contractor to relocate all existing utilities which conflict with the propose improvements shown on the plans.

PRIVATE ENGINEER'S NOTICE TO CONTRACTORS
The Contractor agrees that he shall assume sole and complete responsibility for job site conditions during the course of construction of this project, including safety of all persons and property; that this requirement shall apply continuously and not be limited to normal working hours; and that the contractor shall defend, indemnify, and hold the owner and the engineer harmless from any and all liability, real or alleged, in connection with the performance of work on this project, excepting for liability arising from the sole negligence of the owner or the engineer.

ALL CONSTRUCTION TO CONFORM TO CITY STANDARDS AND SPECIFICATIONS IN RIGHT OF WAY

C:\Users\fernando\Documents_A_13024_Modl1_2013_fernando.rvt
1/31/2014 10:48:31 AM

CRSA
649 E. South Temple
Salt Lake City, UT 84102
801.355.5915

MWL
11798 N. Lakeridge Pkwy.
Ashland, VA 23005
804-228-7473

State of Utah
Department of Administrative Services
Division of Facilities Construction & Management
DFCM
4110 State Office Building
Salt Lake City, Utah 84114
Phone: (801) 538 - 3018
Fax: (801) 538 - 3267

DFCM APPROVAL STAMP

PROFESSIONAL ENGINEER 724907 ALBERT COURY MORRIS 11-21-14 STATE OF UTAH

ARCHITECT-ENGINEER STAMP

Unified State Laboratory Module 2

4451 South 2700 West, Taylorsville, UT 84118

DFCM #:	13020300
Project #:	B13-024

DATE:	ISSUE TYPE:
April 21, 2014	BID SET
May 21, 2015	ADDENDUM #3

CHECKED BY	C. MORRIS
DRAWN BY	R. CHILD

UTILITY PLAN

C300

VOLUME 1

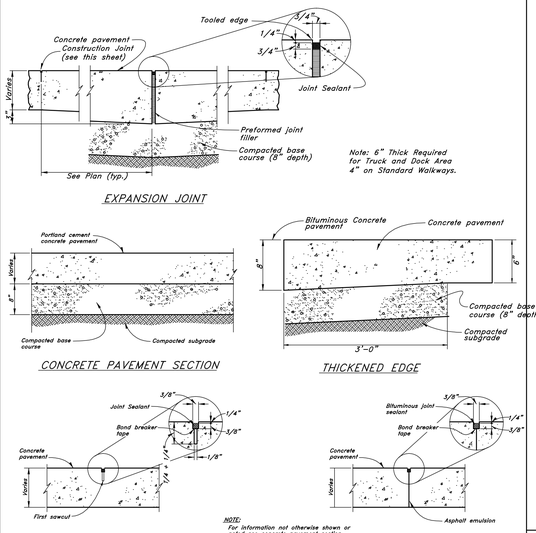

1 Portland Cement Concrete Pavement

Not to Scale

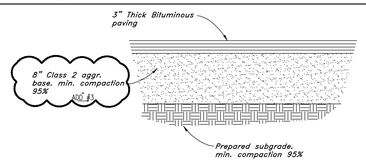

5 Typical Bituminous Pavement Section Parking Areas

Not to Scale

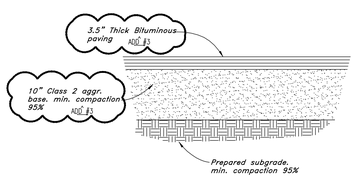

7 Typical Bituminous Pavement Section Heavy Duty Drives

Not to Scale

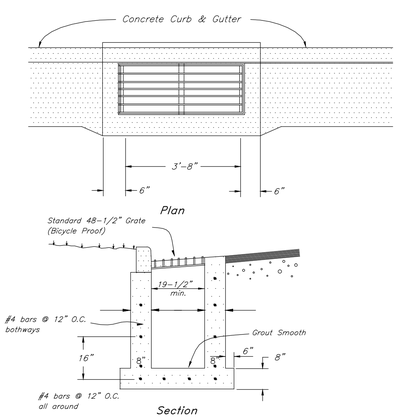

2 Typical Inlet Box

In curb & gutter

Not to Scale

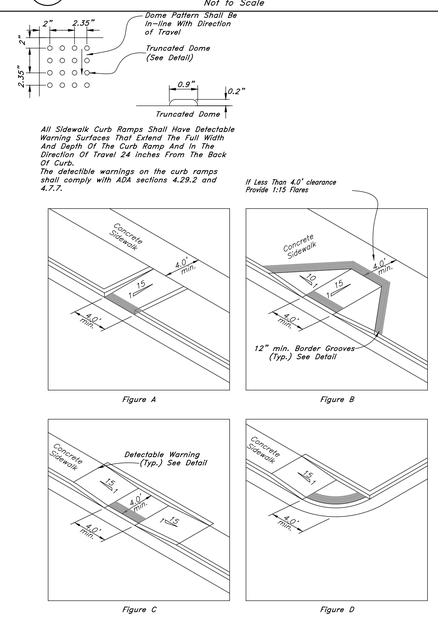

8 Typical Handicap Ramp Detail

Not to Scale

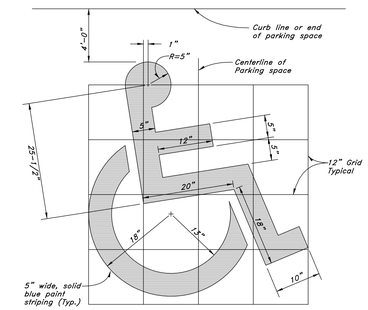

3 Handicap Symbol

Not to Scale

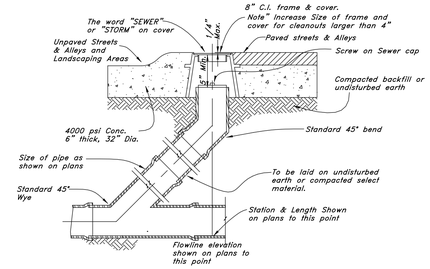

6 Sewer, Storm, and Roof Drain Cleanout Detail

Not to Scale

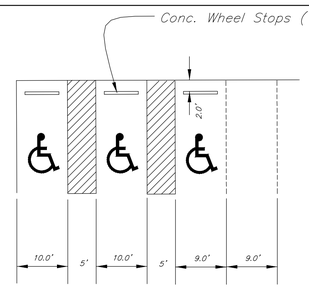

9 Typical Handicap Stall Detail

Not to Scale

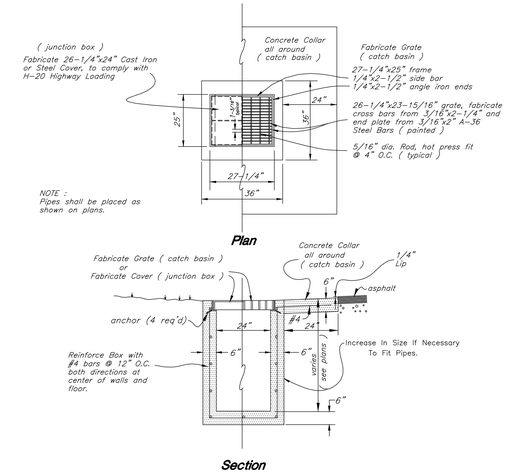

4 Typical Catch Basin Typical Junction Box

Not to Scale

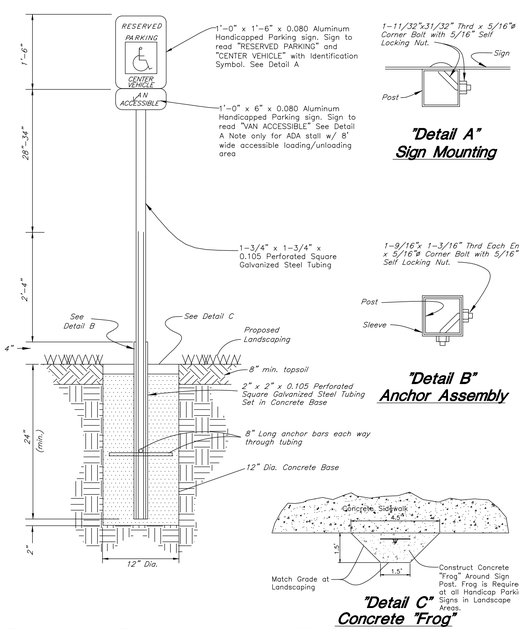

10 Typical Handicap Parking Sign

Not to Scale

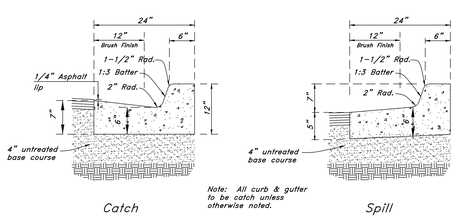

11 Typical Section - 24" Curb & Gutter

Not to Scale

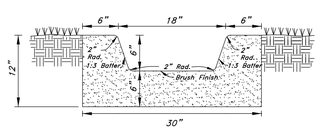

27 Typical U-Gutter

Not to Scale

CRSA
649 E. South Temple
Salt Lake City, UT 84102
801.355.5915

MWL
11798 N. Lakeridge Pkwy.
Ashland, VA 23005
804-228-7473

State of Utah
Department of Administrative Services
Division of Facilities Construction & Management
4110 State Office Building
Salt Lake City, Utah 84114
Phone: (801) 538 - 3018
Fax: (801) 538 - 3267

DFCM APPROVAL STAMP

ARCHITECT-ENGINEER STAMP

Unified State Laboratory Module 2

4451 South 2700 West, Taylorsville, UT 84118

DFCM #: 13020300

Project #: B13-024

DATE:	ISSUE TYPE:
April 21, 2014	BID SET
May 21, 2015	ADDENDUM #3

CHECKED BY	C. MORRIS
DRAWN BY	R. CHILD

CONSTRUCTION DETAIL -1

C400

VOLUME 1

C:\Users\fernando\Documents_A_13724_Modl_2013_fernando.rvt
10/31/2014 10:48:31 AM

W:\13N904 Unified State Labs Module #2\dwg\13N904-S4.dwg, 5/18/2015 2:21:23 PM, RebeccaC, 1:1

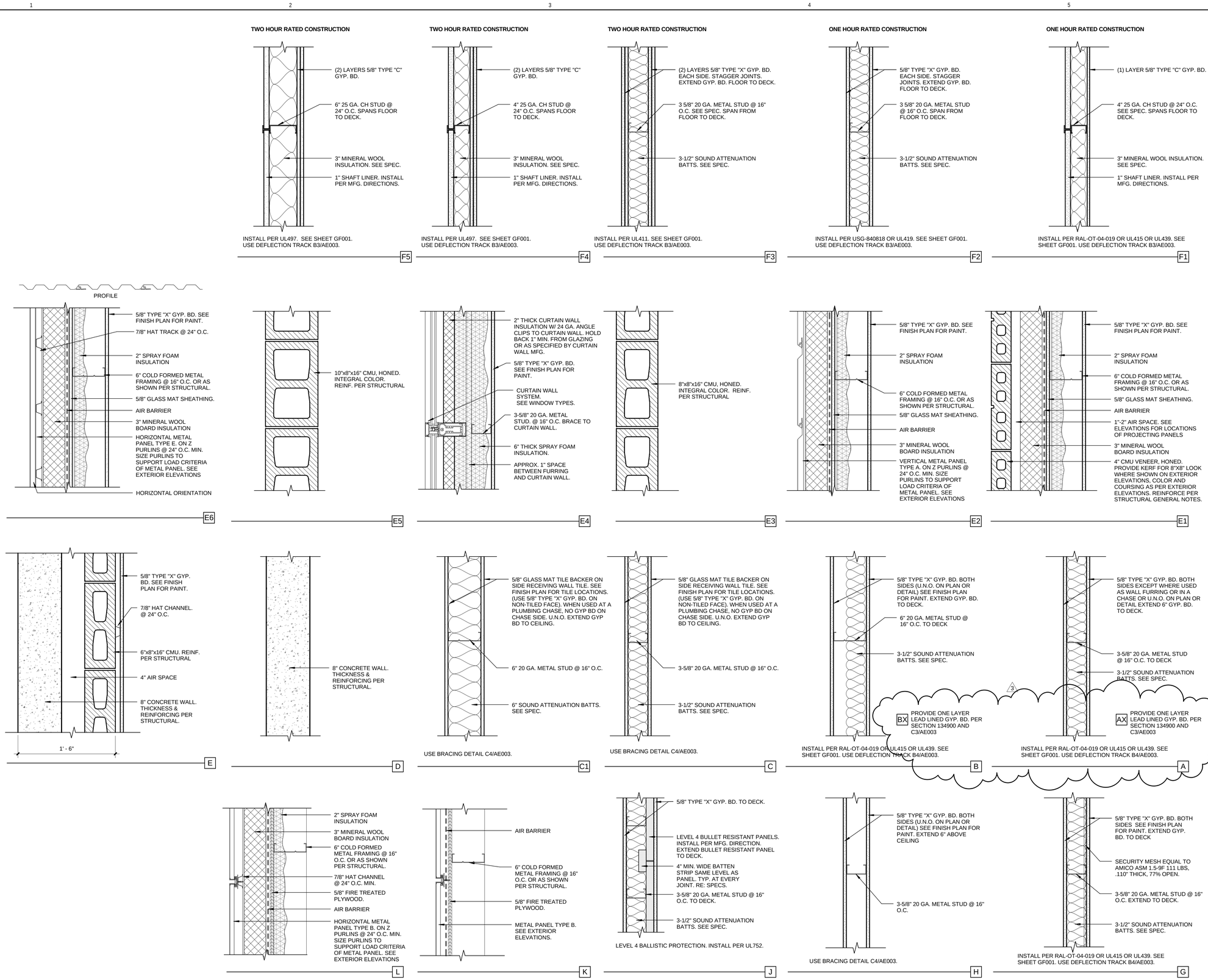

CRSA
649 E. South Temple
Salt Lake City, UT 84102
801.355.5915

MWL
11798 N. Lakeridge Pkwy.
Ashland, VA 23005
804-228-7473

State of Utah
Department of Administrative Services
DFCM
Division of Facilities Construction & Management
4110 State Office Building
Salt Lake City, Utah 84114
Phone: (801) 538 - 3018
Fax: (801) 538 - 3267

DFCM APPROVAL STAMP

STATE OF UTAH #134096 MEHRDAD SAMIE LICENSED ARCHITECT
04-28-2014
ARCHITECT-ENGINEER STAMP

Unified State Laboratory Module 2

4451 South 2700 West, Taylorsville, UT 84118

DFCM #: 13020300
Project #: B13-024

DATE:	ISSUE TYPE:
APRIL 21, 2014	BID SET
MAY 21, 2015	ADD # 3

CHECKED BY	J. NIELSEN
DRAWN BY	F. PITORE

WALL TYPES

AE002

VOLUME 1

C:\Users\fernando\Documents_A_13024_Modil_2013_fernando.rvt
5/20/2015 8:57:31 PM

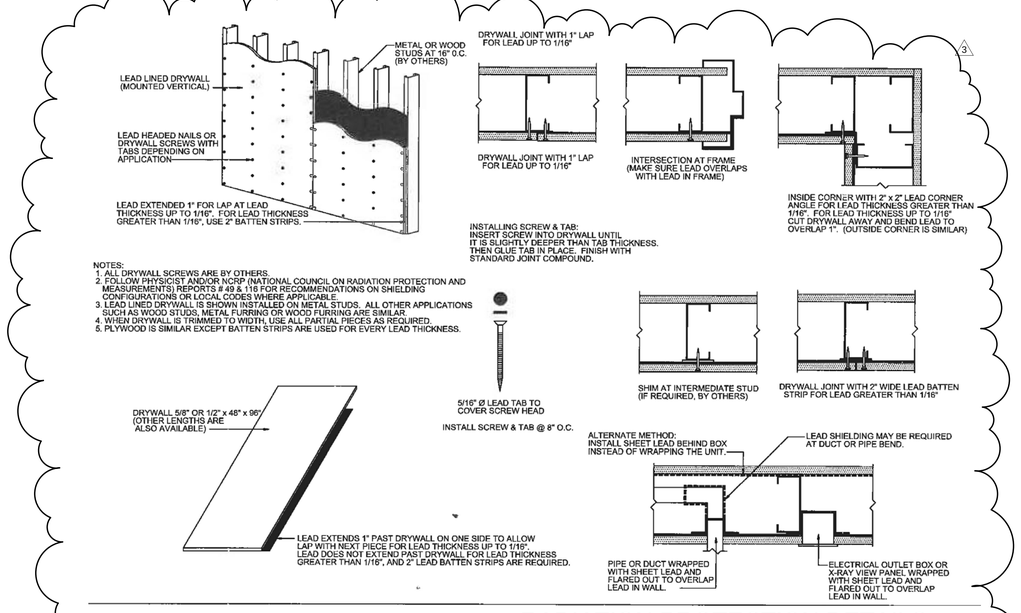

RADIATION PROTECTION DETAILS (C3 / AE003)

1/2" = 1'-0"

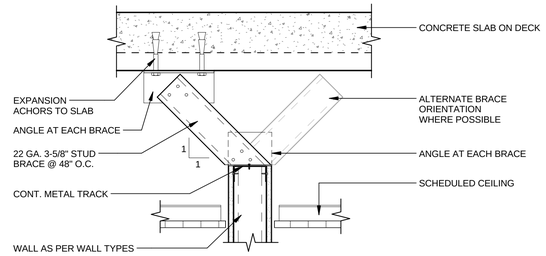

BRACING PARTITION WALL (C4 / AE003)

1 1/2" = 1'-0"

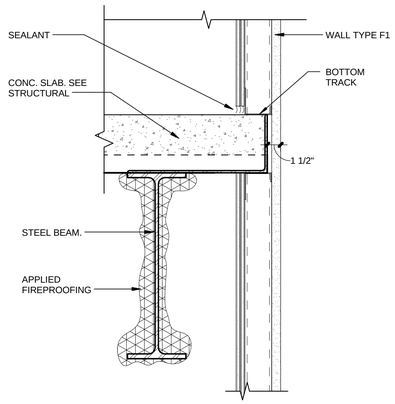

RATED WALL & BEAM DETAIL (C5 / AE003)

1 1/2" = 1'-0"

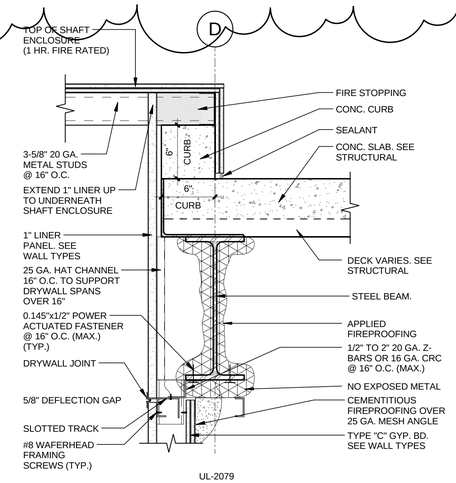

RATED WALL & BEAM DETAIL (B2 / AE003)

1 1/2" = 1'-0"

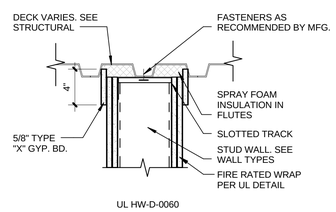

DEFLECTION TRACK DETAIL (B3 / AE003)

1 1/2" = 1'-0"

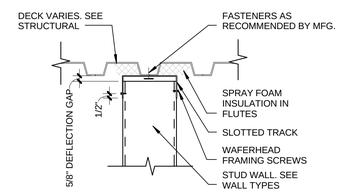

DEFLECTION TRACK DETAIL (B4 / AE003)

1 1/2" = 1'-0"

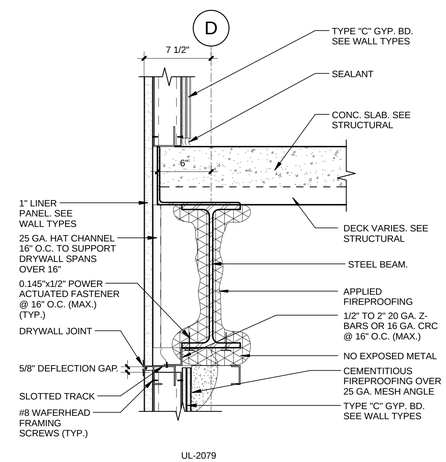

RATED WALL & BEAM DETAIL (B5 / AE003)

1 1/2" = 1'-0"

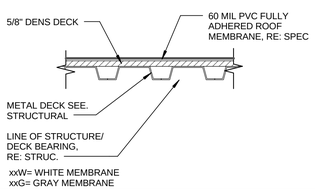

R7

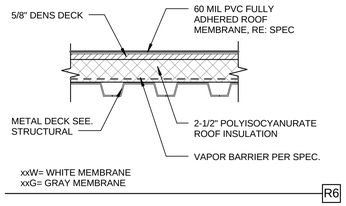

R6

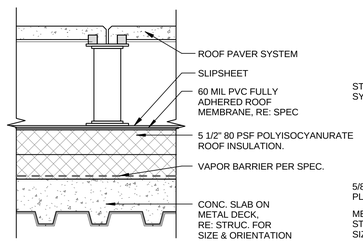

R5

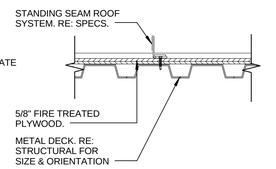

R4

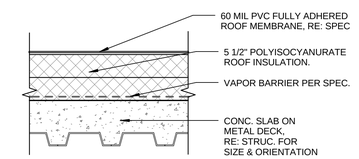

R2

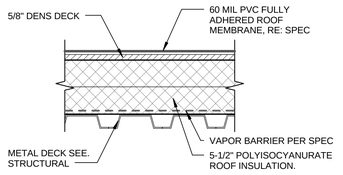

R1

CRSA
649 E. South Temple
Salt Lake City, UT 84102
801.355.5915

MWL
11798 N. Lakeridge Pkwy.
Ashland, VA 23005
804-228-7473

State of Utah
Department of Administrative Services
Division of Facilities Construction & Management
4110 State Office Building
Salt Lake City, Utah 84114
Phone: (801) 538 - 3018
Fax: (801) 538 - 3267

DFCM APPROVAL STAMP

STATE OF UTAH #134096 MEHRDAD SAMII LICENSED ARCHITECT
04-28-2014
ARCHITECT-ENGINEER STAMP

Unified State Laboratory Module 2

4451 South 2700 West, Taylorsville, UT 84118

DFCM #: 13020300

Project #: B13-024

DATE:	ISSUE TYPE:
APRIL 21, 2014	BID SET
MAY 21, 2015	ADD # 3

CHECKED BY	J. NIELSEN
DRAWN BY	F. PITORE

ROOF TYPES & DETAILS

AE003

VOLUME 1

C:\Users\fernando\Documents_A_13024_Modi_2013_fernando.rvt
5/20/2015 8:52:12 PM

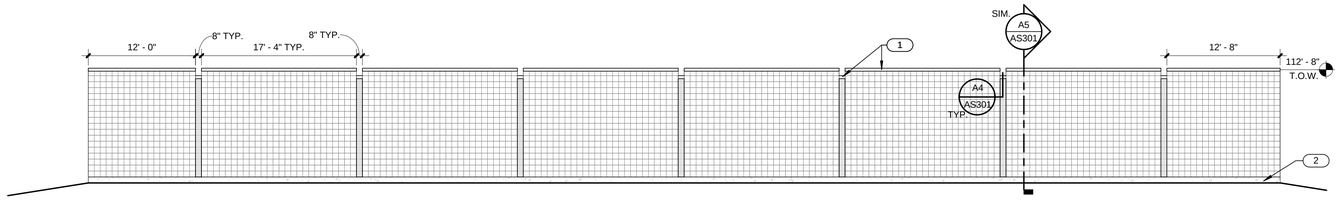

SITE WALL ELEVATION D4 / AS103

1/8" = 1'-0"

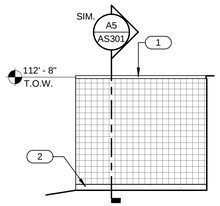

SITE WALL ELEVATION D3 / AS103

1/8" = 1'-0"

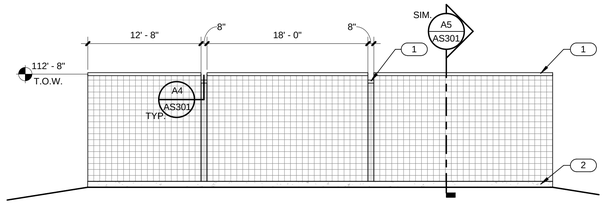

SITE WALL ELEVATION C4 / AS103

1/8" = 1'-0"

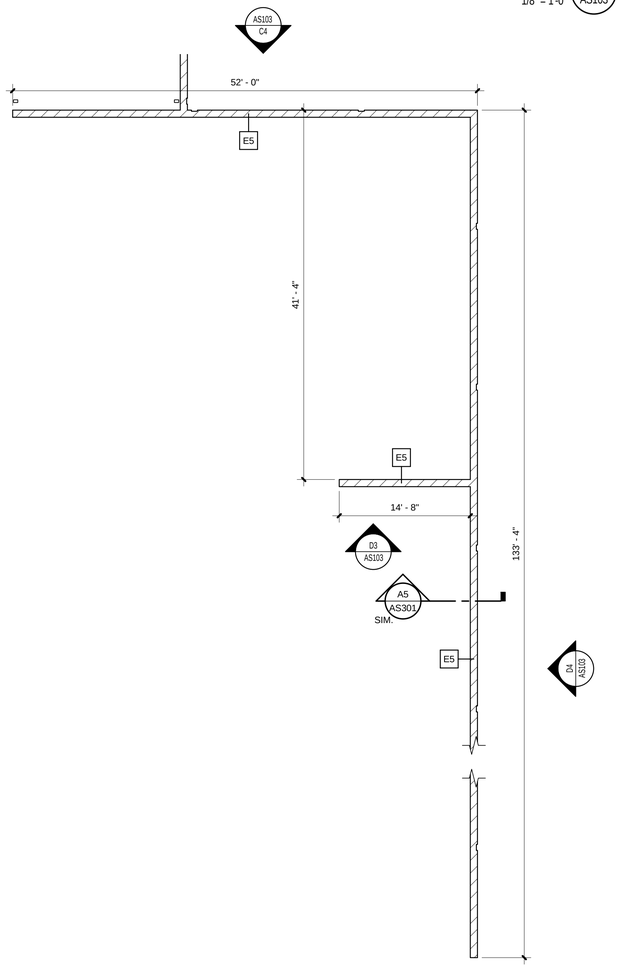

CARPORT PLAN A4 / AS103

1/8" = 1'-0"

GENERAL NOTES

- GENERAL CONTRACTOR SHALL FIELD VERIFY ALL CONDITIONS AND SHALL REPORT TO THE ARCHITECT ANY UNKNOWN CONDITIONS, ERRORS OR CONFLICTS IN THE DRAWINGS BEFORE BEGINNING WORK.
- DO NOT SCALE DRAWINGS.

CMU - A	CA	
CMU - B	CB	SET THIS PANEL 1" PROUD OF PANEL CA

KEYED NOTES

1 METAL CAP FLASHING.
2 REINFORCED CONCRETE FOUNDATION WALL. SEE STRUCTURAL.

CRSA
649 E. South Temple
Salt Lake City, UT 84102
801.355.5915

MWL
11798 N. Lakeridge Pkwy.
Ashland, VA 23005
804-228-7473

State of Utah
Department of Administrative Services
Division of Facilities Construction & Management
4110 State Office Building
Salt Lake City, Utah 84114
Phone: (801) 538 - 3018
Fax: (801) 538 - 3267

DFCM APPROVAL STAMP

STATE OF UTAH #134096 MEHRDAD SAMIE LICENSED ARCHITECT
04.28.2014
ARCHITECT-ENGINEER STAMP

Unified State Laboratory Module 2

4451 South 2700 West, Taylorsville, UT 84118

DFCM #: 13020300
Project #: B13-024

DATE:	ISSUE TYPE:
APRIL 21, 2014	BID SET
MAY 21, 2015	ADD # 3
CHECKED BY	J. NIELSEN
DRAWN BY	F. PITORE

ENLARGED SITE PLAN

3

AS103

VOLUME 1

C:\Users\fernando\Documents_A_13024_Mcgill_2013_fernando.rvt
5/20/2015 8:54:08 PM

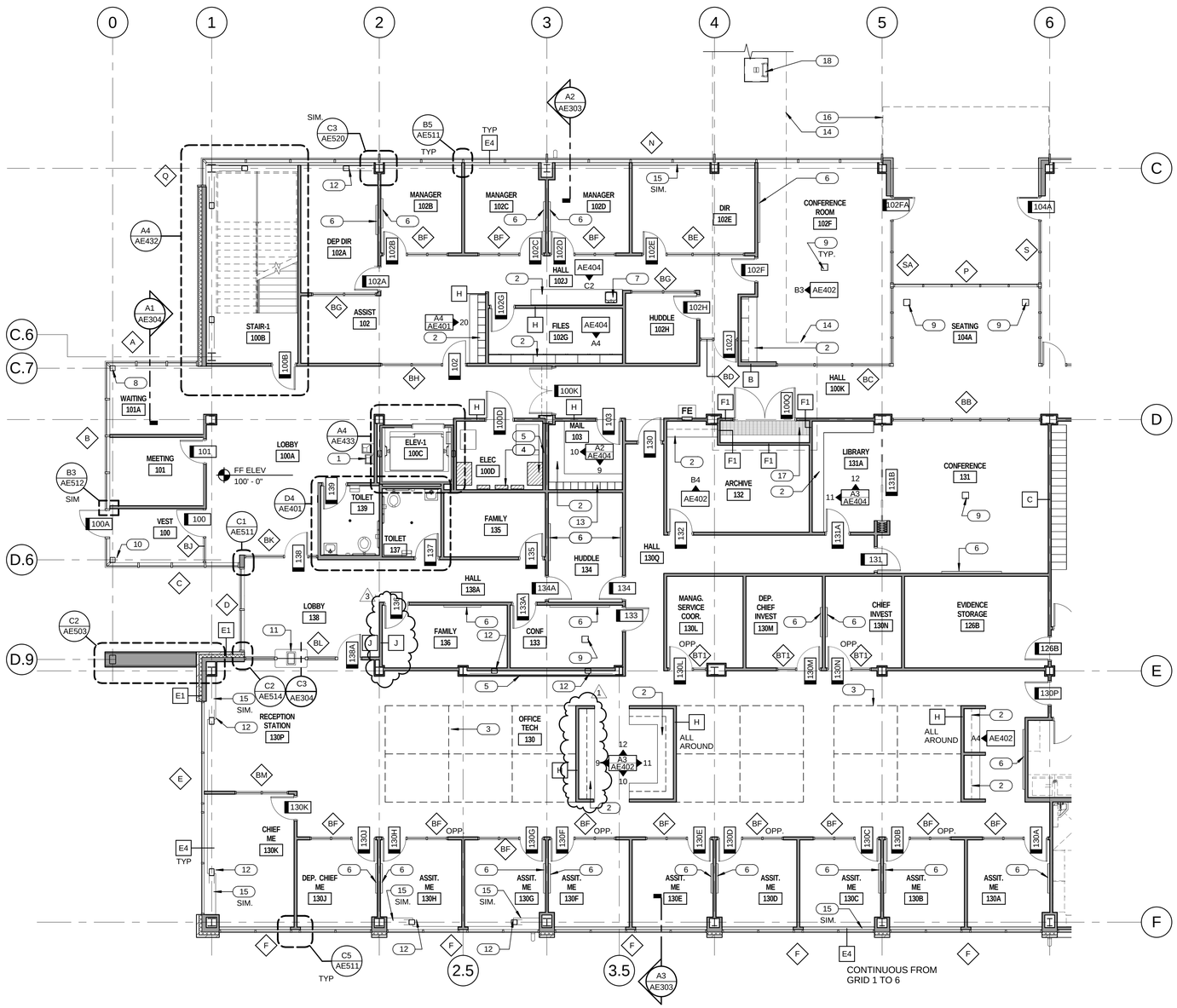

LEVEL 1 PLAN AREA A

1/8" = 1'-0"

GENERAL NOTES

- GENERAL CONTRACTOR SHALL FIELD VERIFY ALL CONDITIONS AND SHALL REPORT TO THE ARCHITECT ANY UNKNOWN CONDITIONS, ERRORS OR CONFLICTS IN THE DRAWINGS BEFORE BEGINNING WORK.
- DO NOT SCALE DRAWINGS.
- ITEMS SHOWN BY HIDDEN LINE ARE SPECIFIED BY OTHER SECTIONS.

ALL WALLS TO BE TYPE "A" U.N.O. ON PLAN — A

FIRE EXTINGUISHER — FE

KEYED NOTES

1. DRINKING FOUNTAIN. SEE PLUMBING DRAWINGS.
2. CASEWORK. SEE INTERIOR ELEVATIONS.
3. SPACE FOR CUBICLE.
4. ELECTRICAL PANEL. SEE ELECTRICAL DRAWINGS.
5. FURR WALL WITH WALL TYPE H. SEE FINISH PLANS FOR FINISH.
6. WHITEBOARD. SEE ACCESSORY SCHEDULE.
7. SINK. SEE PLUMBING DRAWINGS.
8. STEEL COLUMN. SEE STRUCTURAL. PAINT WHERE EXPOSED.
9. FLOOR BOX. SEE ELECTRICAL DRAWINGS.
10. STEEL COLUMN. SEE STRUCTURAL. FIREPROOF PER SPEC.
11. TRANSACTION COUNTER. SEE WINDOW TYPES.
12. BRACE FRAME. PAINT WHERE EXPOSED. SEE STRUCTURAL.
13. MAIL SLOTS. SEE INTERIOR ELEVATIONS.
14. TUNNEL BELOW.
15. WINDOW SIIL. SEE A3/AE405.
16. ROOF ABOVE.
17. STEEL GRATE. COORDINATE WITH MECHANICAL PIPING. SEE MECHANICAL DRAWINGS.
18. ESCAPE HATCH. SEE DETAIL C5/AE550.

KEY PLAN

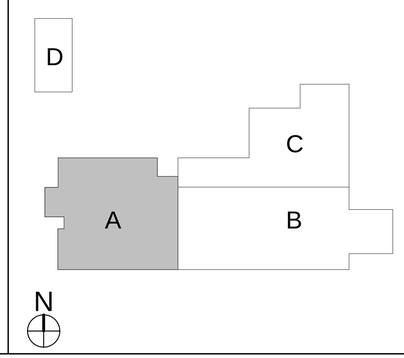

CRSA
649 E. South Temple
Salt Lake City, UT 84102
801.355.5915

MWL
11798 N. Lakeridge Pkwy.
Ashland, VA 23005
804-228-7473

State of Utah
Department of Administrative Services
Division of Facilities Construction & Management
4110 State Office Building
Salt Lake City, Utah 84114
Phone: (801) 538 - 3018
Fax: (801) 538 - 3267

DFCM APPROVAL STAMP

STATE OF UTAH #134096 MEHRDAD SAMIE LICENSED ARCHITECT
04.28.2014
ARCHITECT-ENGINEER STAMP

Unified State Laboratory Module 2

4451 South 2700 West, Taylorsville, UT 84118

DFCM #: 13020300

Project #: B13-024

DATE:	ISSUE TYPE:
APRIL 21, 2014	BID SET
MAY 8, 2015	ADD # 1
MAY 21, 2015	ADD # 3

CHECKED BY: J. NIELSEN

DRAWN BY: F. PITORE

LEVEL 1 PLAN AREA A

AE101A

VOLUME 1

C:\Users\fernando\Documents_A_13024_Modl_2013_fernando.rvt
5/20/2015 8:52:18 PM

KEYED NOTES

1. MOP SINK. SEE PLUMBING DRAWINGS.
2. MOP RACK. SEE ACCESSORY SCHEDULE.
3. FLOOR DRAIN. SLOPE FLOOR TO DRAIN AS SHOWN. SEE PLUMBING DRAWINGS.
4. TRENCH DRAIN. SEE PLUMBING DRAWINGS.
5. FURR WALL WITH WALL TYPE H. SEE FINISH PLANS FOR FINISH.
6. BOLLARD. SEE DETAIL 16/C401.
7. SCRUB SINK. SEE PLUMBING DRAWINGS.
8. WINDOW SILL. SEE FINISH LEGEND.
9. STEEL COLUMN. SEE STRUCTURAL. PAINT WHERE EXPOSED.
10. BRACE FRAME. PAINT WHERE EXPOSED. SEE STRUCTURAL.
11. COLUMN WRAP. SIMILAR TO DETAIL A5/AE520
12. ELECTRICAL PANEL. SEE ELECTRICAL DRAWINGS.
13. FURR WALL WITH 1-1/2" METAL FRAMING.
14. WHITEBOARD. SEE ACCESSORY SCHEDULE.

GENERAL NOTES

- GENERAL CONTRACTOR SHALL FIELD VERIFY ALL CONDITIONS AND SHALL REPORT TO THE ARCHITECT ANY UNKNOWN CONDITIONS, ERRORS OR CONFLICTS IN THE DRAWINGS BEFORE BEGINNING WORK.
- DO NOT SCALE DRAWINGS.
- ITEMS SHOWN BY HIDDEN LINE ARE SPECIFIED BY OTHER SECTIONS.

ALL WALLS TO BE TYPE "A" U.N.O. ON PLAN — A

FIRE EXTINGUISHER — FE

KEY PLAN

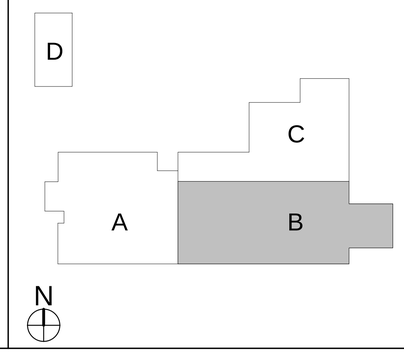

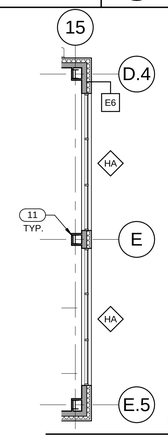

CLERESTORY PLAN — 1/8" = 1'-0"

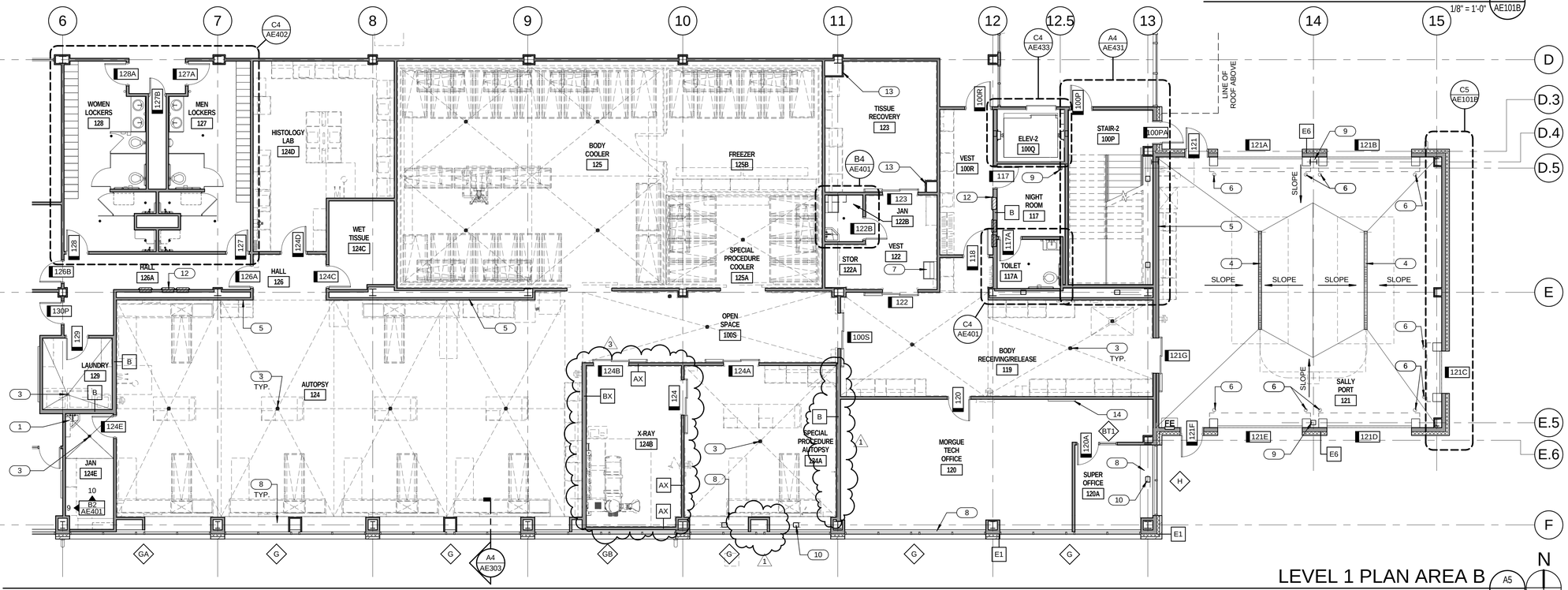

LEVEL 1 PLAN AREA B — A5 AE101B — 1/8" = 1'-0"

CRSA
649 E. South Temple
Salt Lake City, UT 84102
801.355.5915

MWL
11798 N. Lakeridge Pkwy.
Ashland, VA 23005
804-228-7473

State of Utah
Department of Administrative Services
Division of Facilities Construction & Management
DFCM
4110 State Office Building
Salt Lake City, Utah 84114
Phone: (801) 538 - 3018
Fax: (801) 538 - 3267

DFCM APPROVAL STAMP

STATE OF UTAH #134096 MEHRDAD SAMII LICENSED ARCHITECT
04.28.2014
ARCHITECT-ENGINEER STAMP

Unified State Laboratory Module 2

4451 South 2700 West, Taylorsville, UT 84118

DFCM #:	13020300
Project #:	B13-024

DATE:	ISSUE TYPE:
APRIL 21, 2014	BID SET
MAY 8, 2015	ADD # 1
MAY 21, 2015	ADD # 3

CHECKED BY	J. NIELSEN
DRAWN BY	F. PITORE

LEVEL 1 PLAN AREA B

AE101B

VOLUME 1

C:\Users\fernando\Documents_A_13024_Modl_2013_fernando.rvt
5/20/2015 8:52:30 PM

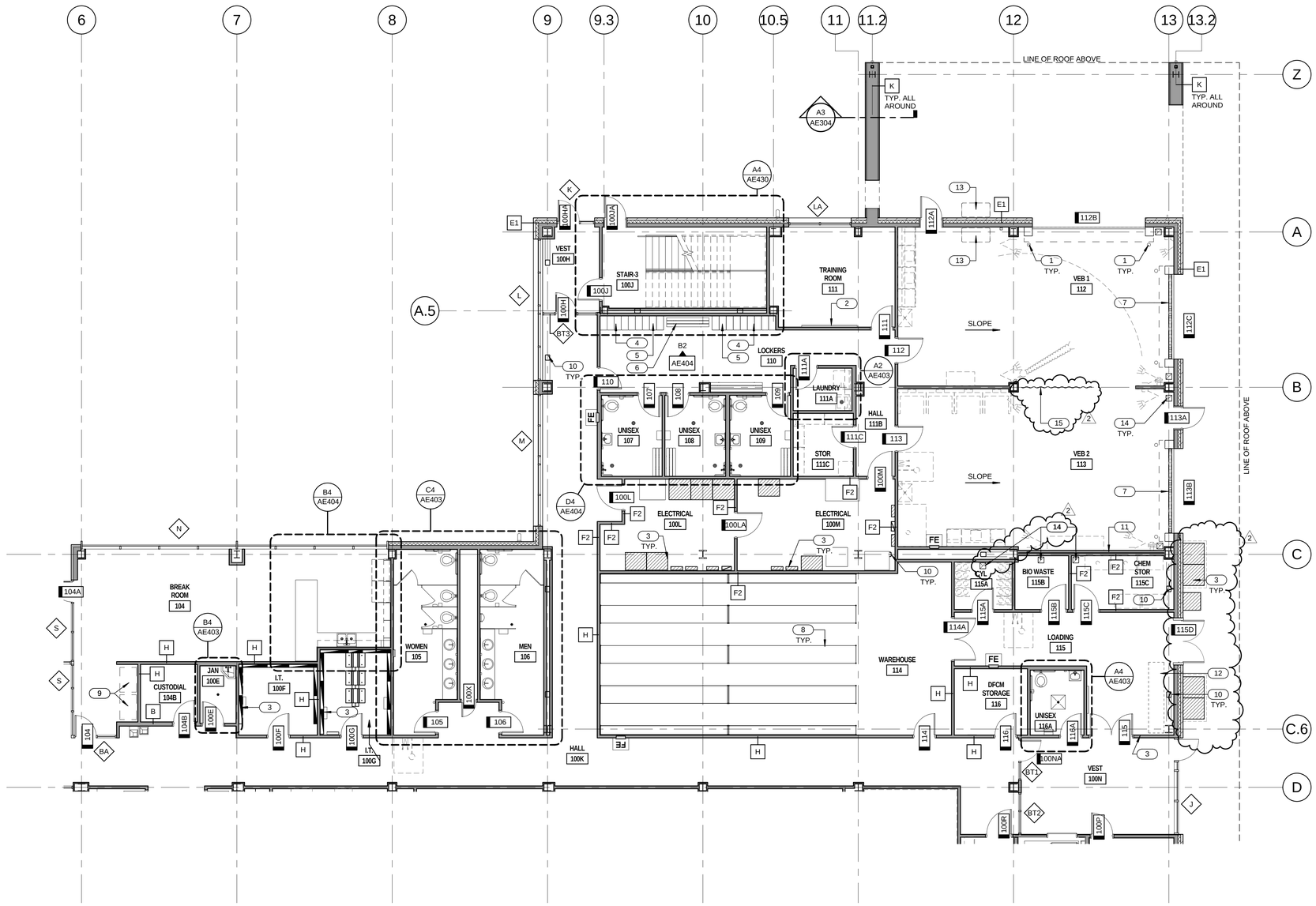

LEVEL 1 PLAN AREA C

1/8" = 1'-0"

A4 AE101C

N

GENERAL NOTES

- GENERAL CONTRACTOR SHALL FIELD VERIFY ALL CONDITIONS AND SHALL REPORT TO THE ARCHITECT ANY UNKNOWN CONDITIONS, ERRORS OR CONFLICTS IN THE DRAWINGS BEFORE BEGINNING WORK.
- DO NOT SCALE DRAWINGS.
- ITEMS SHOWN BY HIDDEN LINE ARE SPECIFIED BY OTHER SECTIONS.

ALL WALLS TO BE TYPE "A" U.N.O. ON PLAN — A

FIRE EXTINGUISHER — FE

KEYED NOTES

1. BOLLARD. SEE DETAIL 16/C401.
2. WHITEBOARD. SEE ACCESSORY SCHEDULE.
3. ELECTRICAL PANEL. SEE ELECTRICAL DRAWINGS.
4. LOCKERS. SEE ACCESSORY SCHEDULE
5. CUBBIES. SEE INTERIOR ELEVATIONS.
6. BENCH. SEE ACCESSORY SCHEDULE.
7. FRENCH DRAIN. SEE PLUMBING DRAWINGS.
8. ALTERNATE 1: STORAGE SHELVING. SEE DETAIL A1/AE550.
9. VENDING MACHINES. PROVIDED BY OWNER.
10. BRACE FRAME. PAINT WHERE EXPOSED. SEE STRUCTURAL.
11. FURR WALL WITH WALL TYPE H. SEE FINISH PLANS FOR FINISH.
12. FIRE RISER. SEE PLUMBING DRAWINGS.
13. FOLD DOWN SURFACE. SEE IL DRAWINGS.
14. MECHANICAL DUCT. SEE MECHANICAL DRAWINGS.
15. CURTAIN. SEE ACCESSORY SCHEDULE.

KEY PLAN

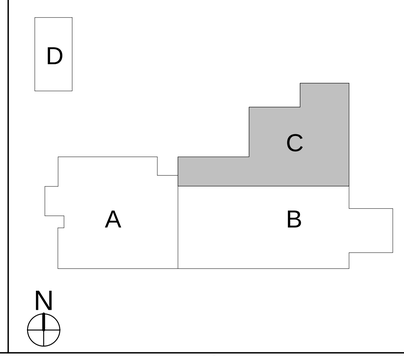

CRSA

649 E. South Temple
Salt Lake City, UT 84102
801.355.5915

MWL

11798 N. Lakeridge Pkwy.
Ashland, VA 23005
804-228-7473

State of Utah
Department of Administrative Services
Division of Facilities Construction & Management
4110 State Office Building
Salt Lake City, Utah 84114
Phone: (801) 538 - 3018
Fax: (801) 538 - 3267

DFCM APPROVAL STAMP

STATE OF UTAH #134096 MEHRDAD SAMII LICENSED ARCHITECT

04.28.2014

ARCHITECT-ENGINEER STAMP

Unified State Laboratory Module 2

4451 South 2700 West, Taylorsville, UT 84118

DFCM #: 13020300

Project #: B13-024

DATE:	ISSUE TYPE:
APRIL 21, 2014	BID SET
MAY 15, 2015	ADD # 2
MAY 21, 2015	ADD # 3

CHECKED BY: J. NIELSEN

DRAWN BY: F. PITORE

LEVEL 1 PLAN AREA C

AE101C

VOLUME 1

C:\Users\fernando\Documents_A_13024_Mcdll_2013_fernando.rvt
5/20/2015 8:52:36 PM

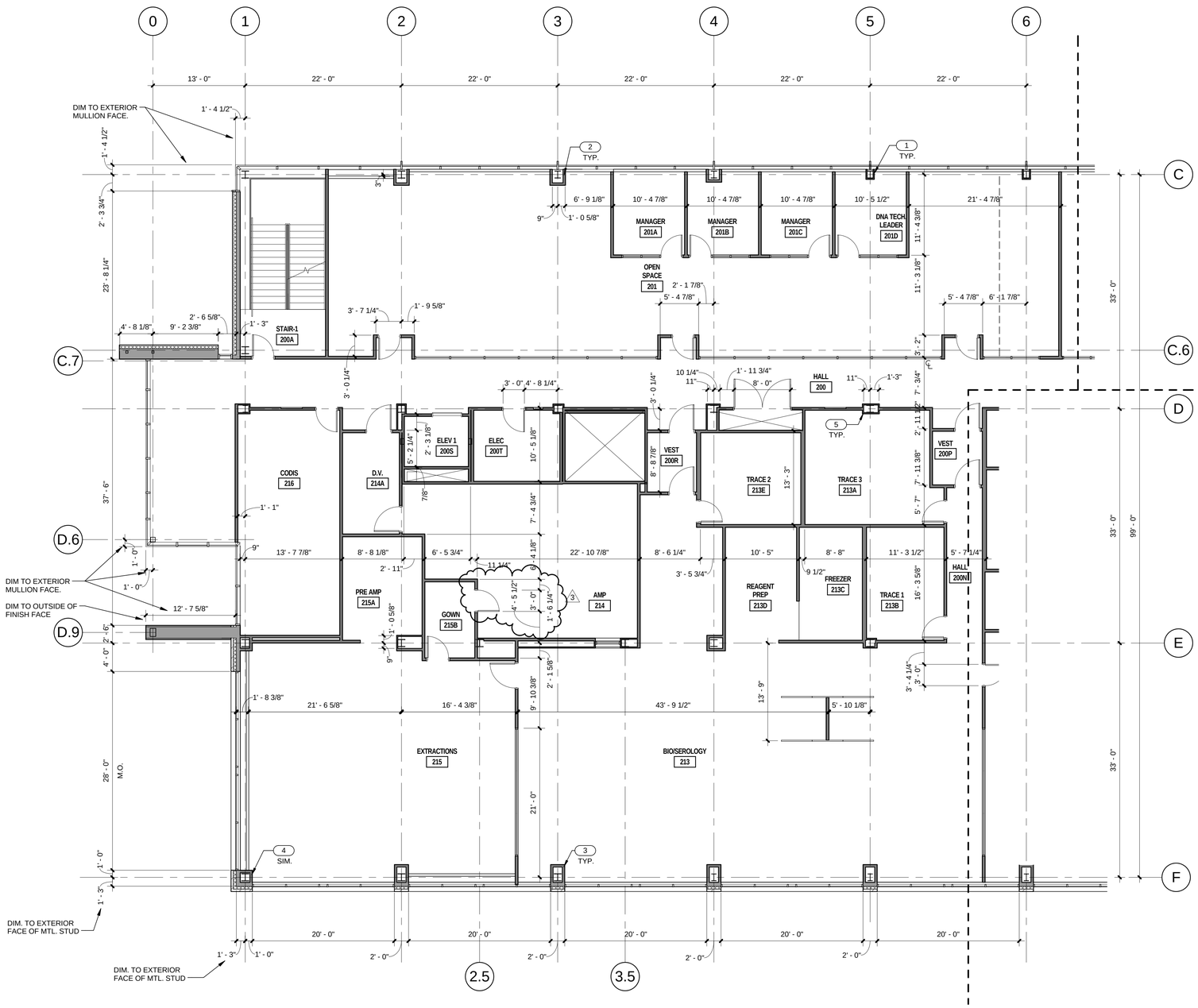

LEVEL 2 DIMENSION PLAN AREA A

1/8" = 1'-0"

A4 AE102A.D

GENERAL NOTES

- GENERAL CONTRACTOR SHALL FIELD VERIFY ALL CONDITIONS AND SHALL REPORT TO THE ARCHITECT ANY UNKNOWN CONDITIONS, ERRORS OR CONFLICTS IN THE DRAWINGS BEFORE BEGINNING WORK.
- DO NOT SCALE DRAWINGS.

KEYED NOTES

1 COLUMN WRAP TYPE A. SEE C3/AE520
2 COLUMN WRAP TYPE B. SEE B4/AE520
3 COLUMN WRAP TYPE D. SEE A4/AE520
4 COLUMN WRAP TYPE C. SEE B5/AE520
5 COLUMN WRAP TYPE E. SEE A5/AE520

KEY PLAN

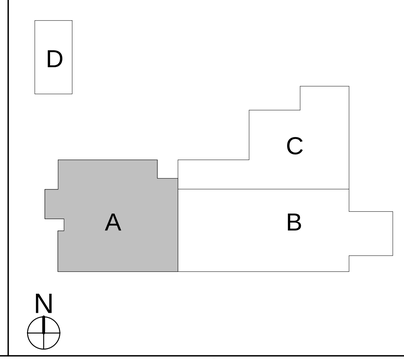

CRSA
649 E. South Temple
Salt Lake City, UT 84102
801.355.5915

MWL
11798 N. Lakeridge Pkwy.
Ashland, VA 23005
804-228-7473

State of Utah
Department of Administrative Services
Division of Facilities Construction & Management
DFCM
4110 State Office Building
Salt Lake City, Utah 84114
Phone: (801) 538 - 3018
Fax: (801) 538 - 3267

DFCM APPROVAL STAMP

STATE OF UTAH #134096 MEHRDAD SAMIE LICENSED ARCHITECT
04.28.2014
ARCHITECT-ENGINEER STAMP

Unified State Laboratory Module 2

4451 South 2700 West, Taylorsville, UT 84118

DFCM #: 13020300
Project #: B13-024

DATE:	ISSUE TYPE:
APRIL 21, 2014	BID SET
MAY 21, 2015	ADD # 3

CHECKED BY	J. NIELSEN
DRAWN BY	F. PITORE

LEVEL 2 DIMENSION PLAN AREA A

AE102A.D

VOLUME 1

C:\Users\fernando\Documents_A_13024_Modli_2013_fernando.rvt
5/20/2015 8:52:41 PM

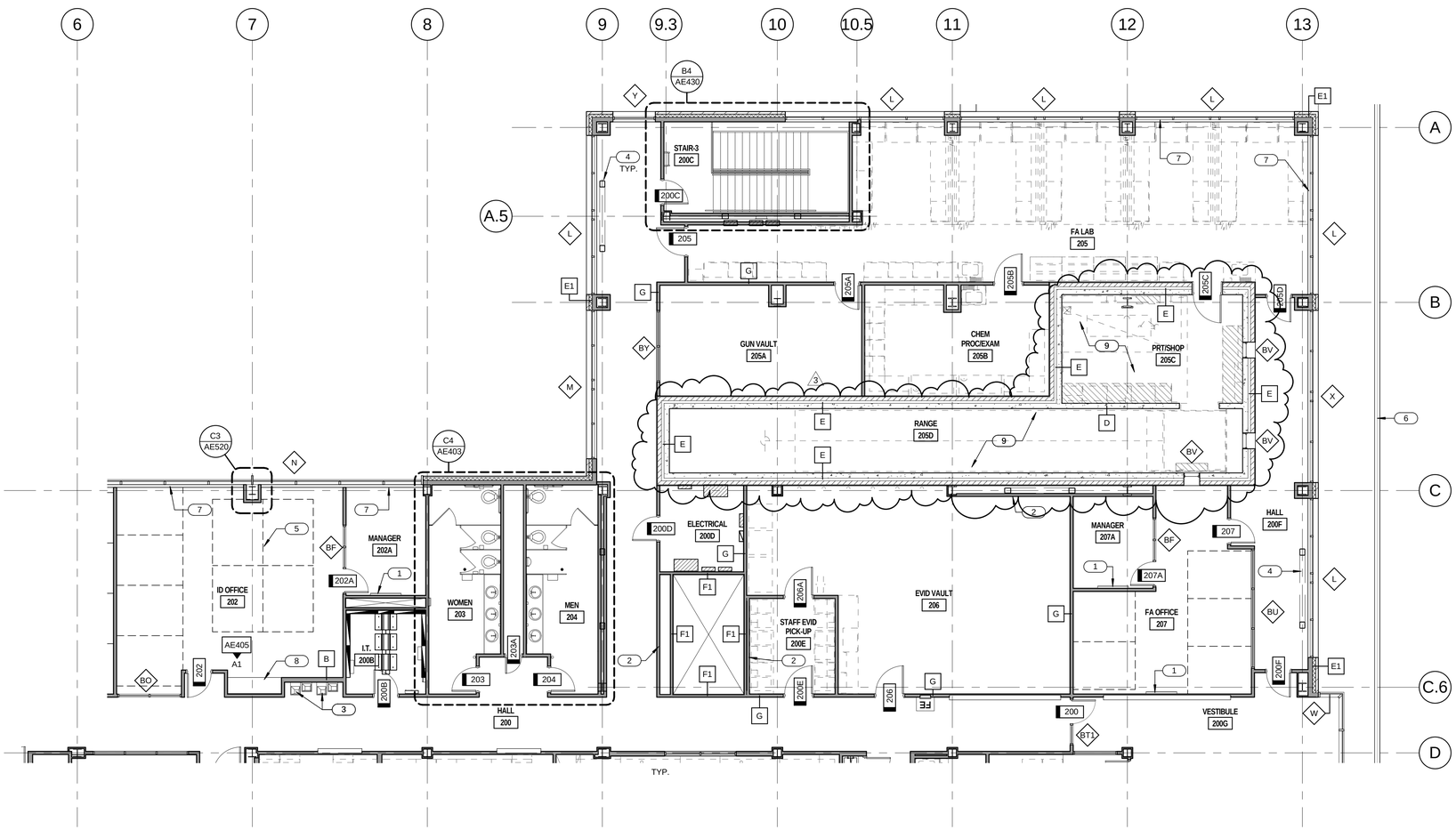

LEVEL 2 PLAN AREA C (A4 / AE102C)

1/8" = 1'-0"

N

GENERAL NOTES

- GENERAL CONTRACTOR SHALL FIELD VERIFY ALL CONDITIONS AND SHALL REPORT TO THE ARCHITECT ANY UNKNOWN CONDITIONS, ERRORS OR CONFLICTS IN THE DRAWINGS BEFORE BEGINNING WORK.
- DO NOT SCALE DRAWINGS.
- ITEMS SHOWN BY HIDDEN LINE ARE SPECIFIED BY OTHER SECTIONS.

ALL WALLS TO BE TYPE "A" U.N.O. ON PLAN — A

FIRE EXTINGUISHER — FE

KEYED NOTES

1. WHITEBOARD. SEE ACCESSORY SCHEDULE.
2. FURR WALL WITH WALL TYPE H. SEE FINISH PLANS FOR FINISH.
3. DRINKING FOUNTAIN. SEE PLUMBING DRAWINGS.
4. BRACE FRAME. PAINT WHERE EXPOSED. SEE STRUCTURAL.
5. SPACE FOR CUBICLE.
6. INTEGRAL GUTTER BELOW. SEE ROOF PLANS.
7. WINDOW SILL. SEE FINISH LEGEND.
8. COUNTERTOP. SEE INTERIOR ELEVATIONS.
9. REFER TO IL DRAWINGS FOR ADDITIONAL INFORMATION THIS ROOM.

KEY PLAN

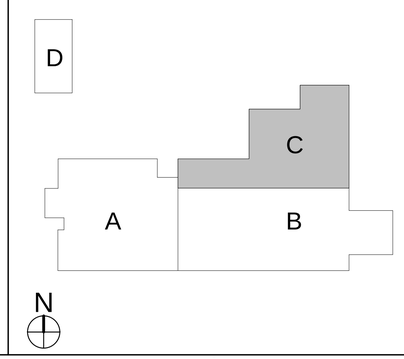

CRSA

649 E. South Temple
Salt Lake City, UT 84102
801.355.5915

MWL

11798 N. Lakeridge Pkwy.
Ashland, VA 23005
804-228-7473

State of Utah
Department of Administrative Services
Division of Facilities Construction & Management
4110 State Office Building
Salt Lake City, Utah 84114
Phone: (801) 538 - 3018
Fax: (801) 538 - 3267

DFCM APPROVAL STAMP

STATE OF UTAH #134096 MEHRDAD SAMIE LICENSED ARCHITECT
04-28-2014
ARCHITECT-ENGINEER STAMP

Unified State Laboratory Module 2

4451 South 2700 West, Taylorsville, UT 84118

DFCM #: 13020300

Project #: B13-024

DATE:	ISSUE TYPE:
APRIL 21, 2014	BID SET
MAY 21, 2015	ADD # 3

CHECKED BY	J. NIELSEN
DRAWN BY	F. PITORE

LEVEL 2 PLAN AREA C

AE102C

VOLUME 1

C:\Users\fernando\Documents_A_13024_Modil_2013_fernando.rvt
5/20/2015 8:52:46 PM

LEVEL 3 PLAN AREA B

1/8" = 1'-0"

GENERAL NOTES

- GENERAL CONTRACTOR SHALL FIELD VERIFY ALL CONDITIONS AND SHALL REPORT TO THE ARCHITECT ANY UNKNOWN CONDITIONS, ERRORS OR CONFLICTS IN THE DRAWINGS BEFORE BEGINNING WORK.
- DO NOT SCALE DRAWINGS.
- ITEMS SHOWN BY HIDDEN LINE ARE SPECIFIED BY OTHER SECTIONS.

ALL WALLS TO BE TYPE "A" U.N.O. ON PLAN — A

FIRE EXTINGUISHER — FE

KEYED NOTES

1 SPACE FOR CUBICLE.
2 ELECTRICAL PANEL. SEE ELECTRICAL DRAWINGS.
3 DATA RACK. SEE ELECTRICAL DRAWINGS.
4 UPPER CABINET. SEE INTERIOR ELEVATIONS.
5 FURR WALL WITH WALL TYPE H. SEE FINISH PLANS FOR FINISH.
6 FLOOR BOX. SEE ELECTRICAL DRAWINGS.
7 ADJUSTABE SHELVING. SEE CASEWORK DETAILS.
8 BOOKSHELF. SEE INTERIOR ELEVATIONS.
9 BRACE FRAME. PAINT WHERE EXPOSED. SEE STRUCTURAL.
10 WINDOW SILL. SEE FINISH LEGEND.
11 STEEL COLUMN. SEE STRUCTURAL. PAINT WHERE EXPOSED.
12 CASEWORK. SEE INTERIOR ELEVATIONS.
13 WHITEBOARD. SEE ACCESSORY SCHEDULE.

KEY PLAN

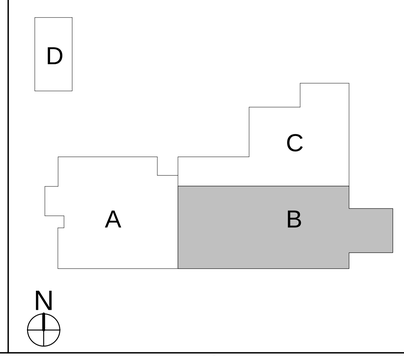

CRSA
649 E. South Temple
Salt Lake City, UT 84102
801.355.5915

MWL
11798 N. Lakeridge Pkwy.
Ashland, VA 23005
804-228-7473

State of Utah
Department of Administrative Services
Division of Facilities Construction & Management
DFCM
4110 State Office Building
Salt Lake City, Utah 84114
Phone: (801) 538 - 3018
Fax: (801) 538 - 3267

DFCM APPROVAL STAMP

STATE OF UTAH #134096 MEHRDAD SAMII LICENSED ARCHITECT
04-28-2014
ARCHITECT-ENGINEER STAMP

Unified State Laboratory Module 2

4451 South 2700 West, Taylorsville, UT 84118

DFCM #: 13020300

Project #: B13-024

DATE:	ISSUE TYPE:
APRIL 21, 2014	BID SET
MAY 21, 2015	ADD # 3

CHECKED BY: J. NIELSEN
DRAWN BY: F. PITORE

LEVEL 3 PLAN AREA B

AE103B

VOLUME 1

C:\Users\fernando\Documents_A_13024_Modli_2013_fernando.rvt
5/20/2015 8:52:51 PM

KEYED NOTES

1. HOIST RAIL.
2. EXPOSED STRUCTURE. PAINT.
3. ALUM. STOREFRONT SYSTEM. SEE WINDOW TYPES.
4. SUNSHADE.
5. NO OSB SUBSTRUCTURE.
6. PROVIDE ONE LAYER LEAD LINED GYP. BD. PER SECTION134900 & C3/AE003

GENERAL NOTES

- GENERAL CONTRACTOR SHALL FIELD VERIFY ALL CONDITIONS AND SHALL REPORT TO THE ARCHITECT ANY UNKNOWN CONDITIONS, ERRORS OR CONFLICTS IN THE DRAWINGS BEFORE BEGINNING WORK.
- DO NOT SCALE DRAWINGS.

METAL SOFFIT PANEL

ACOUSTICAL CEILING TILE 24" X 24"

GYPSUM BOARD. PAINT.

1HR FIRE RATED BOTTOM OF SHAFT AT 10'-0" A.F.F. U.N.O. PER DETAIL C5 / AE530

RADIANT CEILING PANEL @ 10'- 0" A.F.F U.N.O.

SUSPENDED LIGHT FIXTURE

SUPPLY OR RETURN GRILLE. SEE MECHANICAL

LAY-IN MOUNTED LIGHT FIXUTRE. SEE ELECTRICAL

RECESSED LIGHT FIXTURE. SEE ELECTRICAL.

SURFACE MOUNTED LIGHT FIXTURE. SEE ELECTRICAL.

PROJECTOR SCREEN

SPEAKER

SMOKE DETECTOR

HORN STROBE

CEILING MOUNTED FAN COIL

PROJECTOR

MOTION SENSOR

CAMERA

CEILING ACCESS PANEL

STROBE

DROPCORD

FUME HOOD

UMBILICAL SERVICE CHASE

PHOTOCELL

KEY PLAN

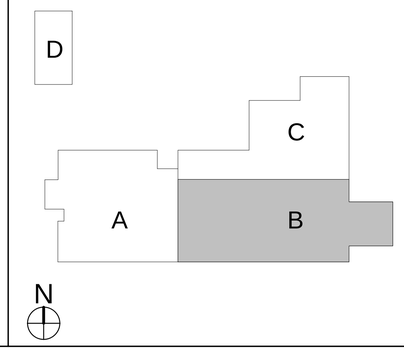

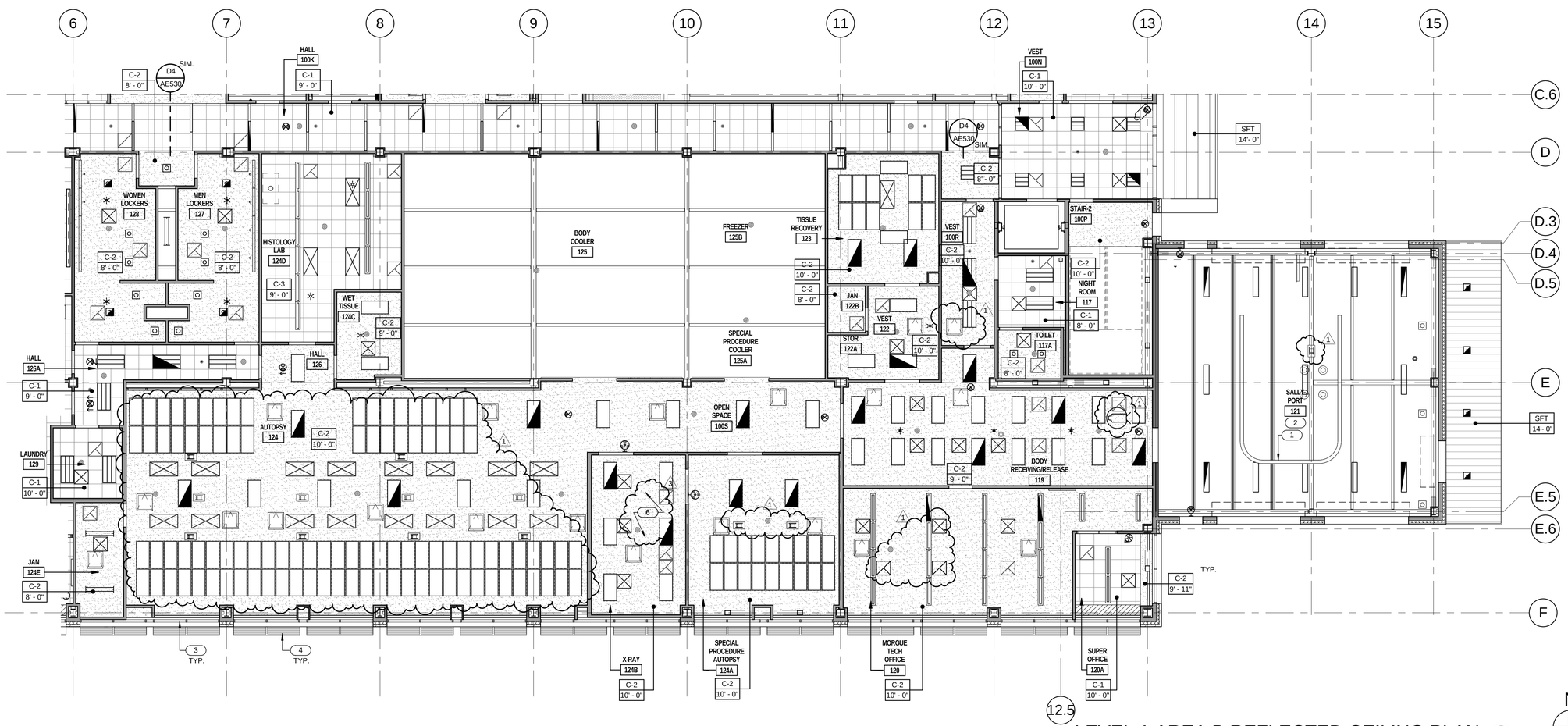

LEVEL 1 AREA B REFLECTED CEILING PLAN (A5 / AE109B)

1/8" = 1'-0"

CRSA

649 E. South Temple
Salt Lake City, UT 84102
801.355.5915

MWL

11798 N. Lakeridge Pkwy.
Ashland, VA 23005
804-228-7473

State of Utah
Department of Administrative Services
Division of Facilities Construction & Management
DFCM
4110 State Office Building
Salt Lake City, Utah 84114
Phone: (801) 538 - 3018
Fax: (801) 538 - 3267

DFCM APPROVAL STAMP

STATE OF UTAH #134098 MEHRDAD SANIE LICENSED ARCHITECT

04.28.2014

ARCHITECT-ENGINEER STAMP

Unified State Laboratory Module 2

4451 South 2700 West, Taylorsville, UT 84118

DFCM #: 13020300

Project #: B13-024

DATE:	ISSUE TYPE:
APRIL 21, 2014	BID SET
MAY 8, 2015	ADD # 1
MAY 21, 2015	ADD # 3

CHECKED BY: J. NIELSEN

DRAWN BY: F. PITORE

LEVEL 1 AREA B REFLECTED CEILING PLAN

AE109B

VOLUME 1

C:\Users\fernando\Documents_A_13024_Modli_2013_fernando.rvt
5/20/2015 8:53:00 PM

KEYED NOTES

1. EXPOSED STRUCTURE. PAINT.
2. CUBICLE CURTAINS. SEE ACCESSORY SCHEDULE.
3. roller window shades typ. all exterior windows. refer to accessory schedule. see specs.
4. ROOF ACCESS LADDER. SEE DETAIL C/AE530
5. ROOF HATCH. SEE DETAIL D/AE531
6. REFER TO IL DRAWINGS FOR ADDITIONAL INFORMATION THIS ROOM.

GENERAL NOTES

- GENERAL CONTRACTOR SHALL FIELD VERIFY ALL CONDITIONS AND SHALL REPORT TO THE ARCHITECT ANY UNKNOWN CONDITIONS, ERRORS OR CONFLICTS IN THE DRAWINGS BEFORE BEGINNING WORK.
- DO NOT SCALE DRAWINGS.

METAL SOFFIT PANEL

ACOUSTICAL CEILING TILE 24" X 24"

GYPSUM BOARD. PAINT.

1HR FIRE RATED BOTTOM OF SHAFT AT 10'-0" A.F.F. U.N.O. PER DETAIL C5 / AE530

RADIANT CEILING PANEL @ 10'- 0" A.F.F U.N.O.

SUSPENDED LIGHT FIXTURE

SUPPLY OR RETURN GRILLE. SEE MECHANICAL

LAY-IN MOUNTED LIGHT FIXUTRE. SEE ELECTRICAL

RECESSED LIGHT FIXTURE. SEE ELECTRICAL.

SURFACE MOUNTED LIGHT FIXTURE. SEE ELECTRICAL.

PROJECTOR SCREEN

SPEAKER

SMOKE DETECTOR

HORN STROBE

CEILING MOUNTED FAN COIL

PROJECTOR

MOTION SENSOR

CAMERA

CEILING ACCESS PANEL

STROBE

DROPCORD

FUME HOOD

UMBILICAL SERVICE CHASE

PHOTOCELL

KEY PLAN

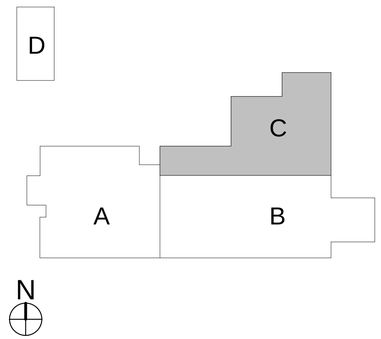

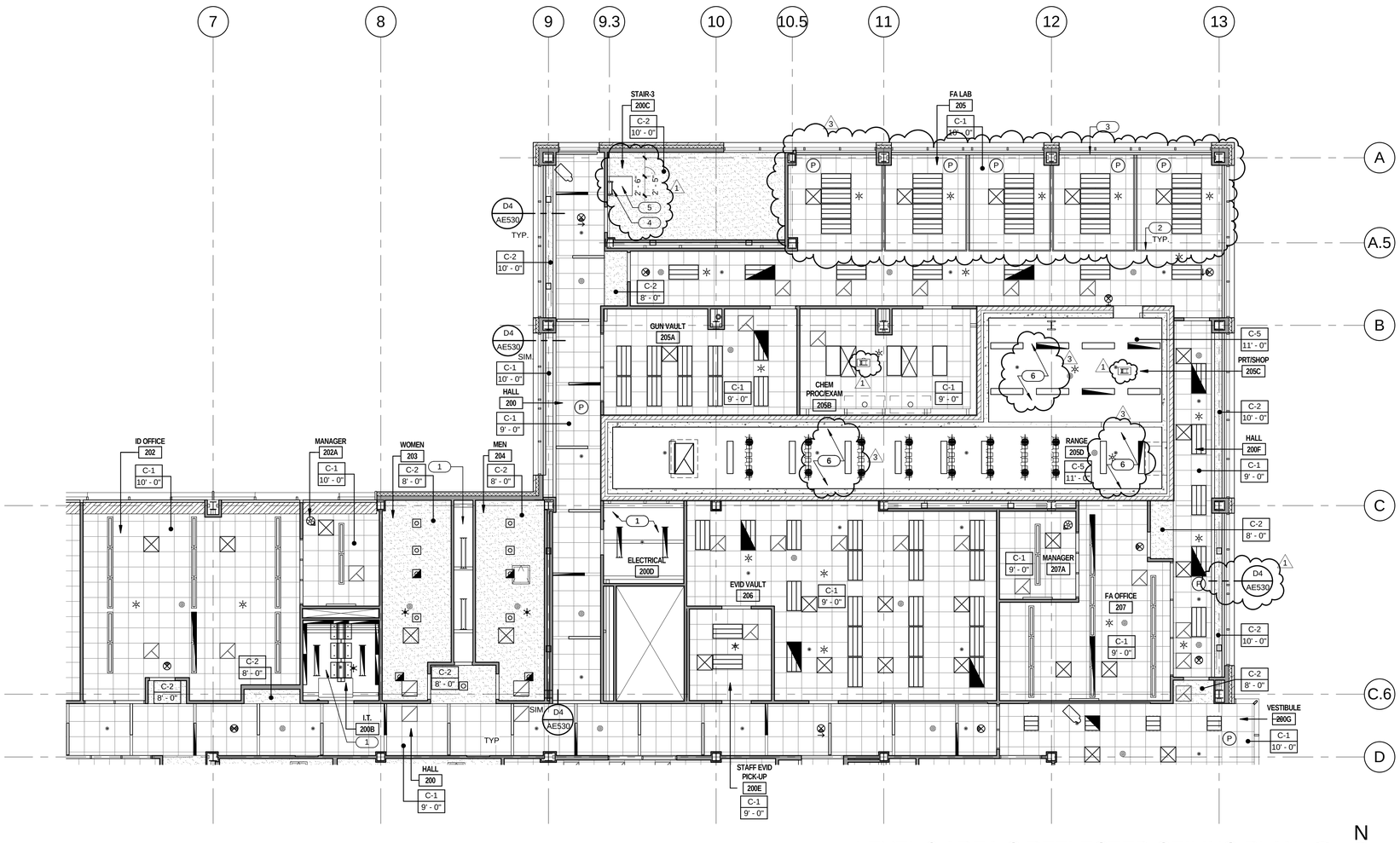

LEVEL 2 AREA C REFLECTED CEILING PLAN

1/8" = 1'-0" (A5 / AE110C)

N

CRSA
649 E. South Temple
Salt Lake City, UT 84102
801.355.5915

MWL
11798 N. Lakeridge Pkwy.
Ashland, VA 23005
804-228-7473

State of Utah
Department of Administrative Services
Division of Facilities Construction & Management
DFCM
4110 State Office Building
Salt Lake City, Utah 84114
Phone: (801) 538 - 3018
Fax: (801) 538 - 3267

DFCM APPROVAL STAMP

STATE OF UTAH #134096 MEHRDAD SAMIE LICENSED ARCHITECT

04.28.2014

ARCHITECT-ENGINEER STAMP

Unified State Laboratory Module 2

4451 South 2700 West, Taylorsville, UT 84118

DFCM #: 13020300

Project #: B13-024

DATE:	ISSUE TYPE:
APRIL 21, 2014	BID SET
MAY 8, 2015	ADD # 1
MAY 21, 2015	ADD # 3

CHECKED BY: J. NIELSEN

DRAWN BY: F. PITORE

LEVEL 2 AREA C REFLECTED CEILING PLAN

AE110C

VOLUME 1

C:\Users\fernando\Documents_A_13024_Modli_2013_fernando.rvt
5/20/2015 8:53:07 PM

KEYED NOTES

1. EXPOSED STRUCTURE. PAINT.
2. CORRUGATED-PERFORATED METAL PANEL. SEE SPECS.
3. ROLLER WINDOW SHADES TYP. ALL EXTERIOR WINDOWS. REFER TO ACCESSORY SCHEDULE. SEE SPECS.
4. CANOPY EXHAUST HOOD. SEE MECHANICAL DRAWINGS.

GENERAL NOTES

- GENERAL CONTRACTOR SHALL FIELD VERIFY ALL CONDITIONS AND SHALL REPORT TO THE ARCHITECT ANY UNKNOWN CONDITIONS, ERRORS OR CONFLICTS IN THE DRAWINGS BEFORE BEGINNING WORK.
- DO NOT SCALE DRAWINGS.

METAL SOFFIT PANEL

ACOUSTICAL CEILING TILE 24" X 24"

GYPSUM BOARD. PAINT.

1HR FIRE RATED BOTTOM OF SHAFT AT 10'-0" A.F.F. U.N.O. PER DETAIL C5 / AE530

RADIANT CEILING PANEL @ 10'- 0" A.F.F U.N.O.

SUSPENDED LIGHT FIXTURE

SUPPLY OR RETURN GRILLE. SEE MECHANICAL

LAY-IN MOUNTED LIGHT FIXUTRE. SEE ELECTRICAL

RECESSED LIGHT FIXTURE. SEE ELECTRICAL.

SURFACE MOUNTED LIGHT FIXTURE. SEE ELECTRICAL.

PROJECTOR SCREEN

SPEAKER

SMOKE DETECTOR

HORN STROBE

CEILING MOUNTED FAN COIL

PROJECTOR

MOTION SENSOR

CAMERA

CEILING ACCESS PANEL

STROBE

DROPCORD

FUME HOOD

UMBILICAL SERVICE CHASE

PHOTOCELL

KEY PLAN

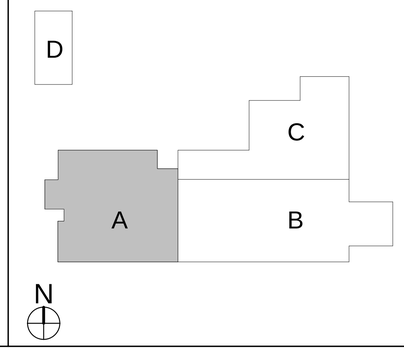

LEVEL 3 AREA A REFLECTED CEILING PLAN

1/8" = 1'-0"

A4 AE111A

CRSA
649 E. South Temple
Salt Lake City, UT 84102
801.355.5915

MWL
11798 N. Lakeridge Pkwy.
Ashland, VA 23005
804-228-7473

State of Utah
Department of Administrative Services
Division of Facilities Construction & Management
4110 State Office Building
Salt Lake City, Utah 84114
Phone: (801) 538 - 3018
Fax: (801) 538 - 3267

DFCM APPROVAL STAMP

STATE OF UTAH #134096 MEHRDAD SAMII LICENSED ARCHITECT

04-28-2014

ARCHITECT-ENGINEER STAMP

Unified State Laboratory Module 2

4451 South 2700 West, Taylorsville, UT 84118

DFCM #: 13020300

Project #: B13-024

DATE:	ISSUE TYPE:
APRIL 21, 2014	BID SET
MAY 21, 2015	ADD # 3

CHECKED BY	J. NIELSEN
DRAWN BY	F. PITORE

LEVEL 3 AREA A REFLECTED CEILING PLAN

AE111A

VOLUME 1

C:\Users\fernando\Documents_A_13024_Modli_2013_fernando.rvt
5/20/2015 8:53:17 PM

KEYED NOTES

1. EXPOSED STRUCTURE. PAINT.
2. CORRUGATED-PERFORATED METAL PANEL. SEE SPECS.
3. ROLLER WINDOW SHADES TYP. ALL EXTERIOR WINDOWS. REFER TO ACCESSORY SCHEDULE. SEE SPECS.

GENERAL NOTES

- GENERAL CONTRACTOR SHALL FIELD VERIFY ALL CONDITIONS AND SHALL REPORT TO THE ARCHITECT ANY UNKNOWN CONDITIONS, ERRORS OR CONFLICTS IN THE DRAWINGS BEFORE BEGINNING WORK.
- DO NOT SCALE DRAWINGS.

METAL SOFFIT PANEL

ACOUSTICAL CEILING TILE 24" X 24"

GYPSUM BOARD. PAINT.

1HR FIRE RATED BOTTOM OF SHAFT AT 10'-0" A.F.F. U.N.O. PER DETAIL C5 / AE530

RADIANT CEILING PANEL @ 10'- 0" A.F.F U.N.O.

SUSPENDED LIGHT FIXTURE

SUPPLY OR RETURN GRILLE. SEE MECHANICAL

LAY-IN MOUNTED LIGHT FIXUTRE. SEE ELECTRICAL

RECESSED LIGHT FIXTURE. SEE ELECTRICAL.

SURFACE MOUNTED LIGHT FIXTURE. SEE ELECTRICAL.

PROJECTOR SCREEN

SPEAKER

SMOKE DETECTOR

HORN STROBE

CEILING MOUNTED FAN COIL

PROJECTOR

MOTION SENSOR

CAMERA

CEILING ACCESS PANEL

STROBE

DROPCORD

FUME HOOD

UMBILICAL SERVICE CHASE

PHOTOCELL

KEY PLAN

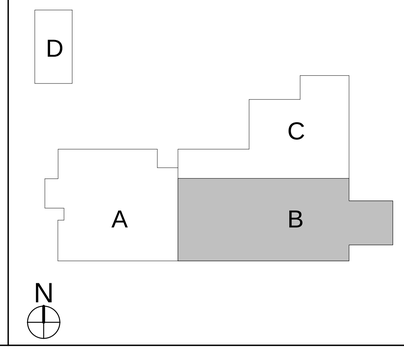

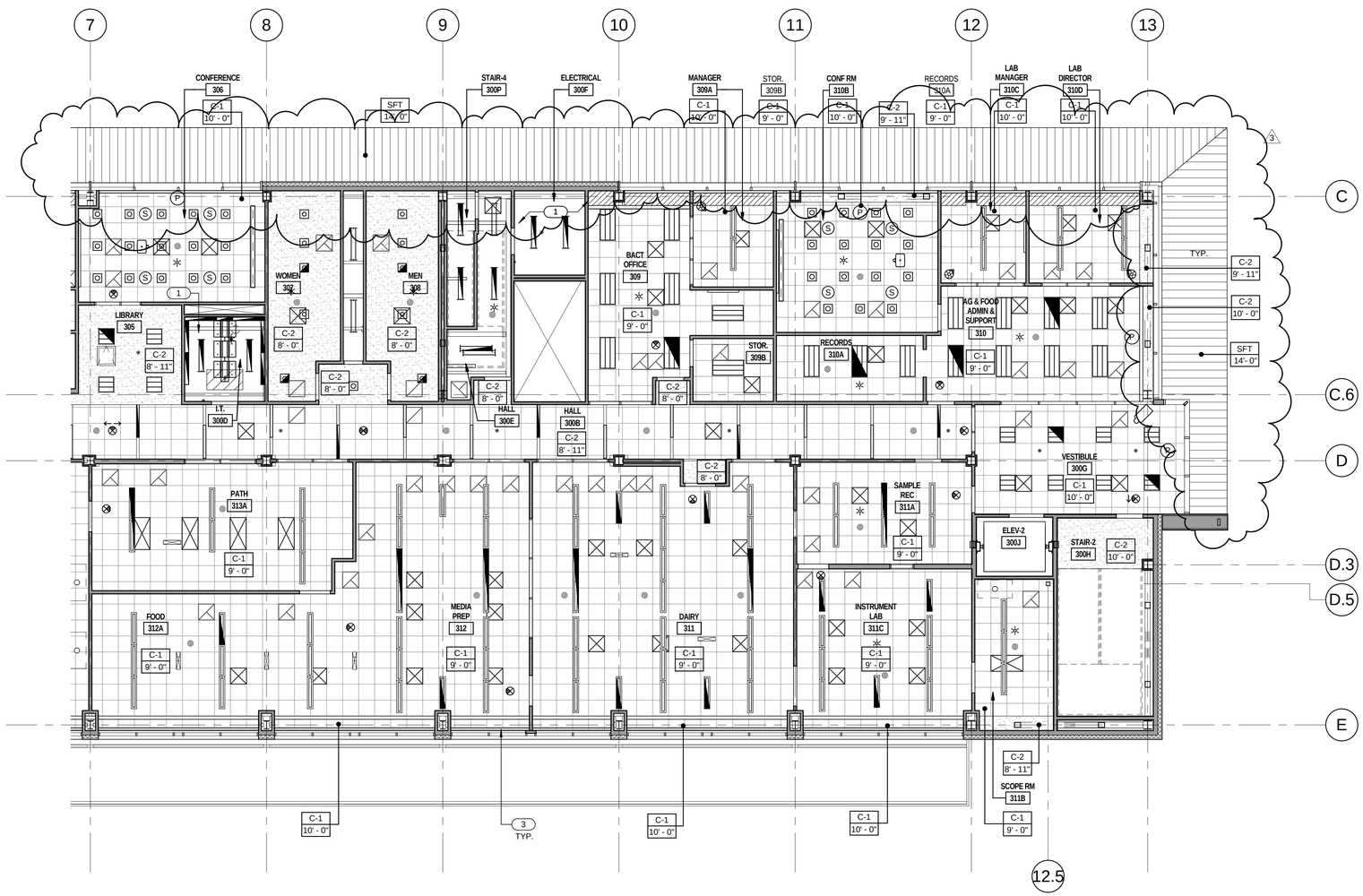

LEVEL 3 AREA B REFLECTED CEILING PLAN

1/8" = 1'-0"

A4 / AE111B

N

CRSA

649 E. South Temple
Salt Lake City, UT 84102
801.355.5915

MWL

11798 N. Lakeridge Pkwy.
Ashland, VA 23005
804-228-7473

State of Utah
Department of Administrative Services

DFCM
Division of Facilities Construction & Management
4110 State Office Building
Salt Lake City, Utah 84114
Phone: (801) 538 - 3018
Fax: (801) 538 - 3267

DFCM APPROVAL STAMP

STATE OF UTAH #134096 MEHRDAD SAMII LICENSED ARCHITECT

04-28-2014

ARCHITECT-ENGINEER STAMP

Unified State Laboratory Module 2

4451 South 2700 West, Taylorsville, UT 84118

DFCM #:	13020300
Project #:	B13-024

DATE:	ISSUE TYPE:
APRIL 21, 2014	BID SET
MAY 21, 2015	ADD # 3

CHECKED BY	J. NIELSEN
DRAWN BY	F. PITORE

LEVEL 3 AREA B REFLECTED CEILING PLAN

AE111B

VOLUME 1

C:\Users\fernando\Documents_A_13024_Modil_2013_fernando.rvt
5/20/2015 8:53:24 PM

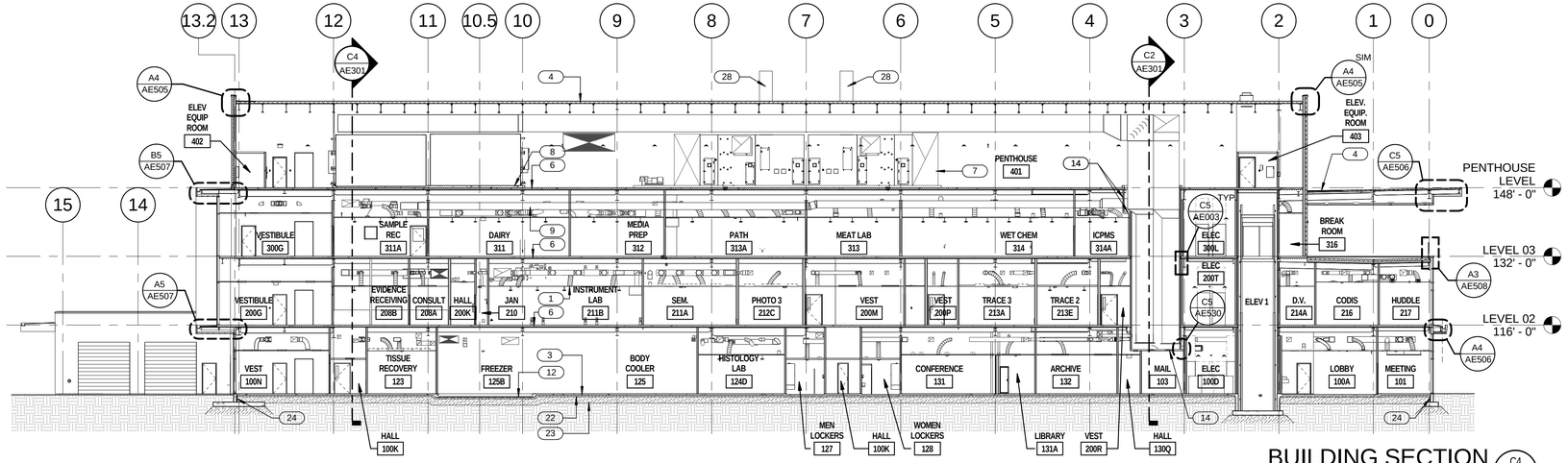

BUILDING SECTION (C4 / AE302)
1/16" = 1'-0"

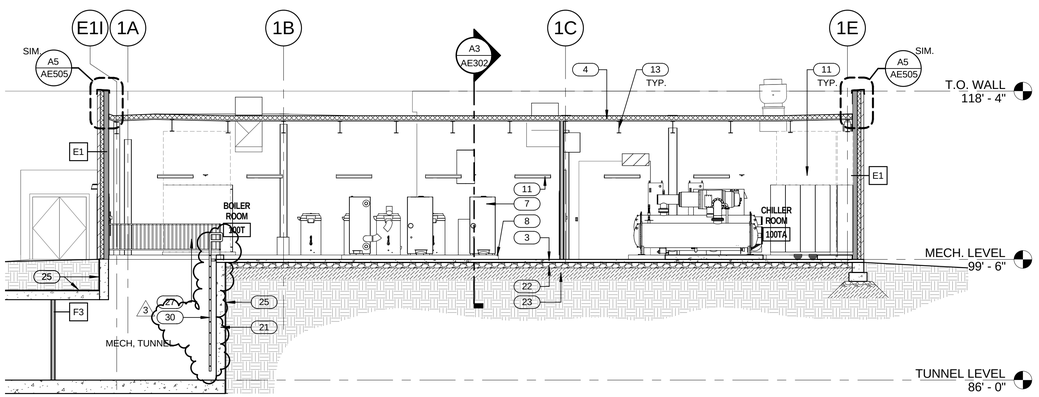

BUILDING SECTION (B4 / AE302)
1/8" = 1'-0"

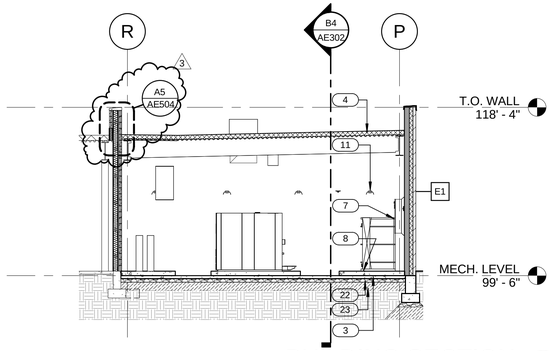

BUILDING SECTION (A3 / AE302)
1/8" = 1'-0"

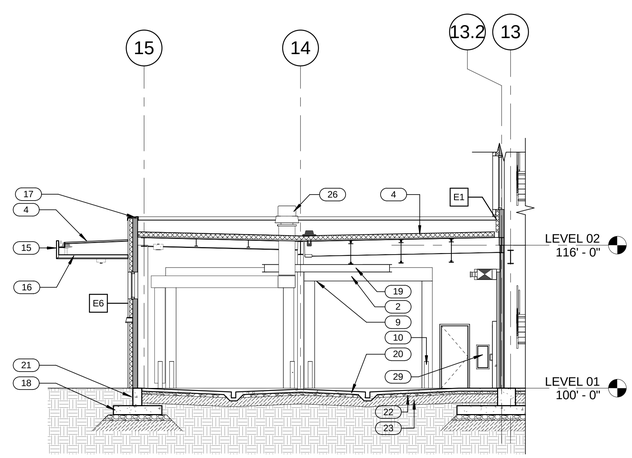

BUILDING SECTION (A4 / AE302)
1/8" = 1'-0"

GENERAL NOTES

- GENERAL CONTRACTOR SHALL FIELD VERIFY ALL CONDITIONS AND SHALL REPORT TO THE ARCHITECT ANY UNKNOWN CONDITIONS, ERRORS OR CONFLICTS IN THE DRAWINGS BEFORE BEGINNING WORK.
- DO NOT SCALE DRAWINGS.

KEYED NOTES

1. LAY-IN CEILING . SEE CEILING PLANS.
2. DOOR. SEE DOOR SCHEDULE.
3. 30" CLEAR AREA.
4. ROOF ASSEMBLY. SEE ROOF TYPES.
5. ALUM. STOREFRONT SYSTEM. SEE WINDOW TYPES.
6. CONCRETE SLAB ON DECK. SEE STRUCTURAL.
7. MECHANICAL EQUIPMENT. SEE MECHANICAL DRAWINGS
8. 6" CONCRETE HOUSEKEEPING PAD. COORDINATE SIZE & PLACEMENT WITH MECHANICAL EQUIPMENT. SEE FINISH SCHEDULE.
9. MECHANICAL DUCT. SEE MECHANICAL DRAWINGS.
10. BOLLARD. SEE DETAIL 16/C401.
11. LIGHT FIXTURE. SEE ELECTRICAL DRAWINGS.
12. DEPRESSED SLAB. SEE SLAB EDGE PLAN.
13. STEEL BEAM. PAINT WHERE EXPOSED. SEE STRUCTURAL.
14. FIRE RATED BOTTOM OF SHAFT. SEE C5/AE530
15. METAL FASCIA.
16. METAL SOFFIT. SEE CEILING PLAN.
17. METAL WALL COPING.
18. REINFORCED CONCRETE FOOTING. SEE STRUCTURAL.
19. HOIST RAIL.
20. CONCRETE SLAB ON GRADE. SEE STRUCTURAL.
21. REINFORCED CONCRETE FOUNDATION WALL. SEE STRUCTURAL.
22. 4" FREE DRAINING GRAVEL.
23. 12" STRUCTURAL FILL. SEE GEOTECH REPORT.
24. 2" RIGID PERIMETER INSULATION
25. FLUID APPLIED WATER PROOFING WITH DRAINAGE MAT, TOP, SIDES, AND FOOTINGS
26. EXHAUST FAN. SEE MECHANICAL DRAWINGS.
27. REMOVABLE GUARDRAIL. SEE A3/AE550.
28. EXHAUST FLUE. SEE MECHANICAL DRAWINGS.
29. ~~FIN EXTINGUISHER IN RECESSED CABINET. SEE SPEC.~~
30. ACCESS LADDER. SEE DETAIL B4/AE550

3

CRSA
649 E. South Temple
Salt Lake City, UT 84102
801.355.5915

MWL
11798 N. Lakeridge Pkwy.
Ashland, VA 23005
804-228-7473

State of Utah
Department of Administrative Services
Division of Facilities Construction & Management
4110 State Office Building
Salt Lake City, Utah 84114
Phone: (801) 538 - 3018
Fax: (801) 538 - 3267

DFCM APPROVAL STAMP

STATE OF UTAH #134096 MEHRDAD SAMII LICENSED ARCHITECT
04-28-2014
ARCHITECT-ENGINEER STAMP

Unified State Laboratory Module 2

4451 South 2700 West, Taylorsville, UT 84118

DFCM #: 13020300

Project #: B13-024

DATE:	ISSUE TYPE:
APRIL 21, 2014	BID SET
MAY 21, 2015	ADD # 3

CHECKED BY: J. NIELSEN

DRAWN BY: F. PITORE

BUILDING SECTION

AE302

VOLUME 1

C:\Users\fernando\Documents_A_13024_Modil_2013_fernando.rvt
5/20/2015 8:53:53 PM

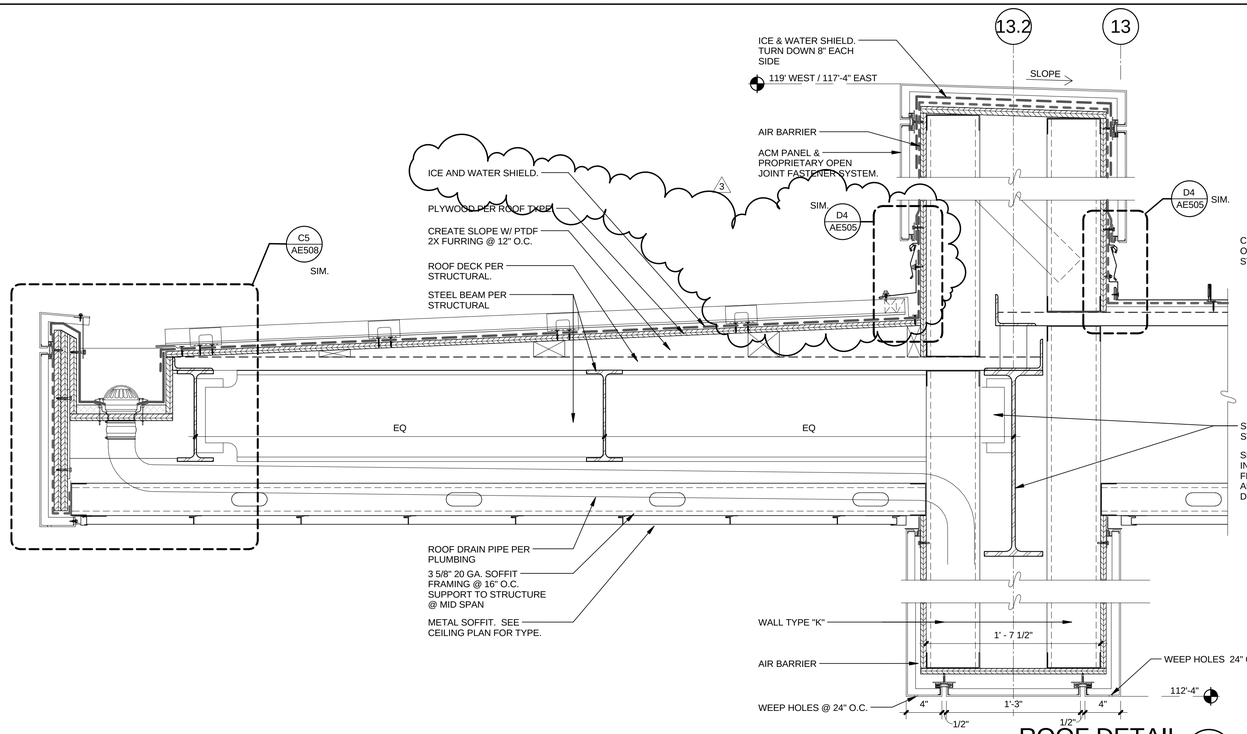

ROOF DETAIL C3 AE504
1 1/2" = 1'-0"

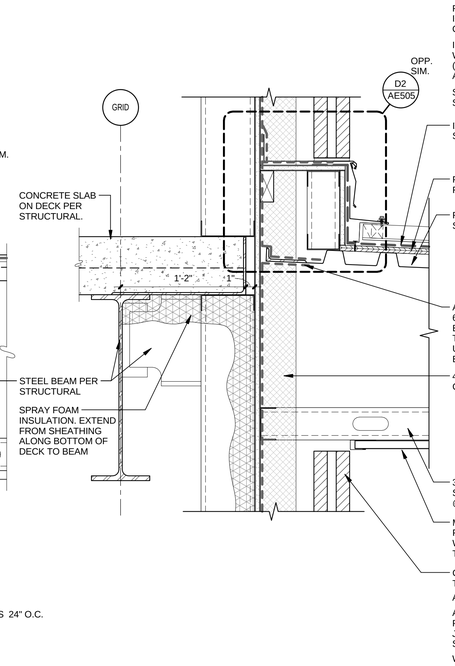

ROOF DETAIL C4 AE504
1 1/2" = 1'-0"

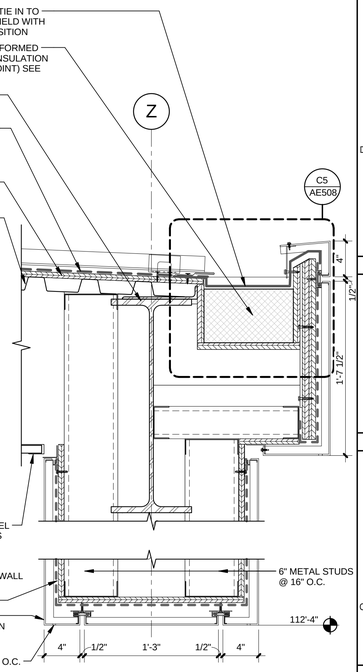

ROOF DETAIL C5 AE504
1 1/2" = 1'-0"

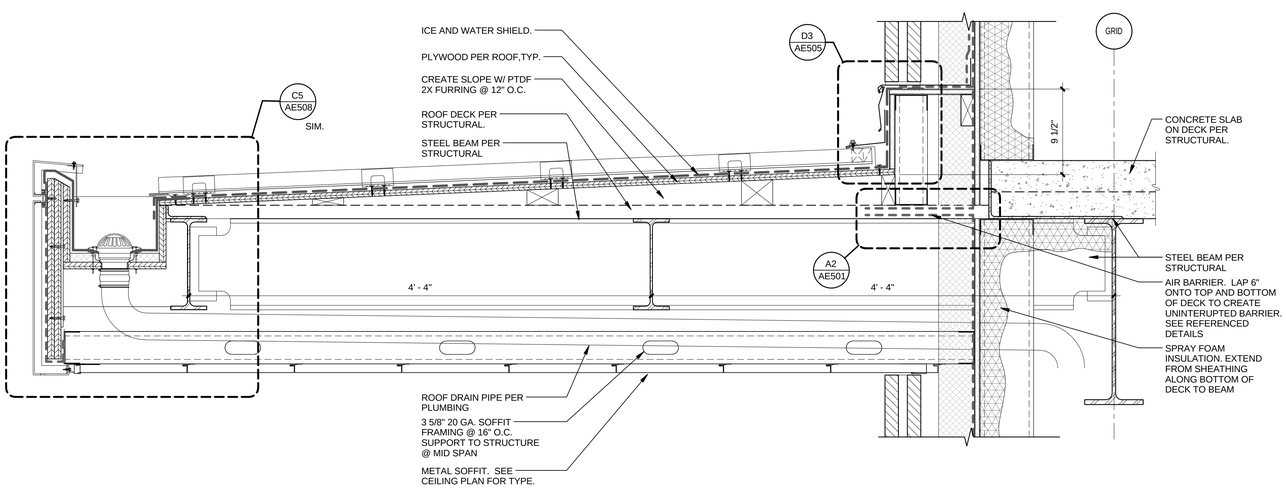

ROOF DETAIL A3 AE504
1 1/2" = 1'-0"

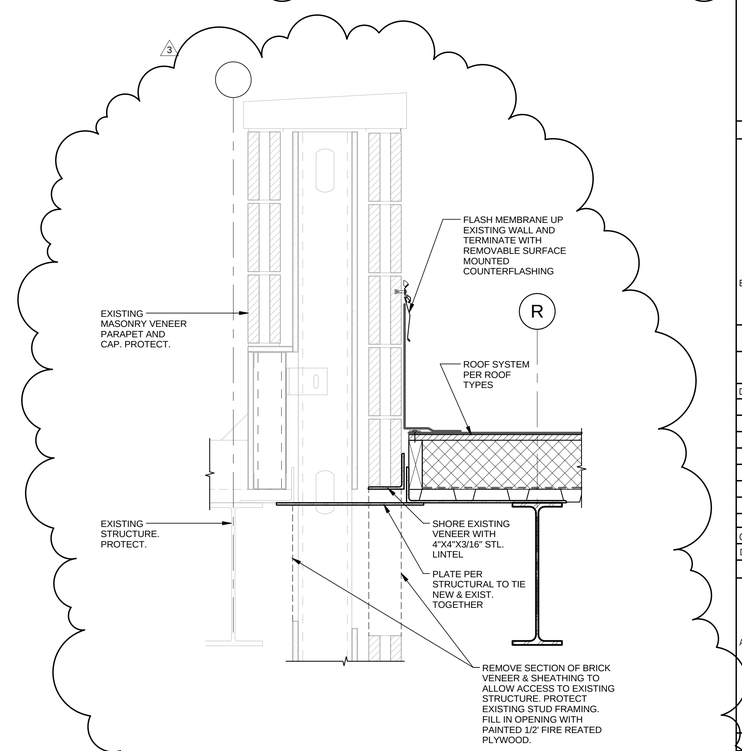

ROOF DETAIL A5 AE504
1 1/2" = 1'-0"

CRSA
649 E. South Temple
Salt Lake City, UT 84102
801.355.5915

MWL
11798 N. Lakeridge Pkwy.
Ashland, VA 23005
804-228-7473

State of Utah
Department of Administrative Services
Division of Facilities Construction & Management
DFCM
4110 State Office Building
Salt Lake City, Utah 84114
Phone: (801) 538 - 3018
Fax: (801) 538 - 3267

DFCM APPROVAL STAMP

STATE OF UTAH #134096 MEHRDAD SAMIE LICENSED ARCHITECT
04-28-2014
ARCHITECT-ENGINEER STAMP

Unified State Laboratory Module 2

4451 South 2700 West, Taylorsville, UT 84118

DFCM #: 13020300

Project #: B13-024

DATE:	ISSUE TYPE:
APRIL 21, 2014	BID SET
MAY 21, 2015	ADD # 3

CHECKED BY	J. NIELSEN
DRAWN BY	F. PITORE

DETAILS

AE504

VOLUME 1

C:\Users\fernando\Documents_A_13024_Modil_2013_fernando.rvt
5/20/2015 8:53:54 PM

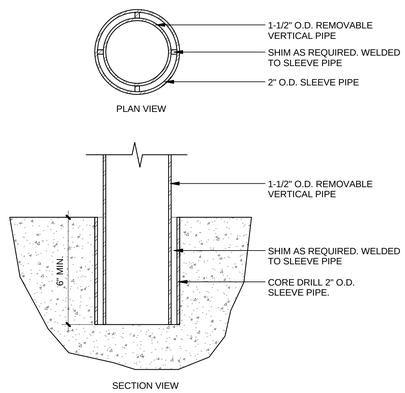

CHAIR RAIL DETAIL (C2 / AE550)

3" = 1'-0"

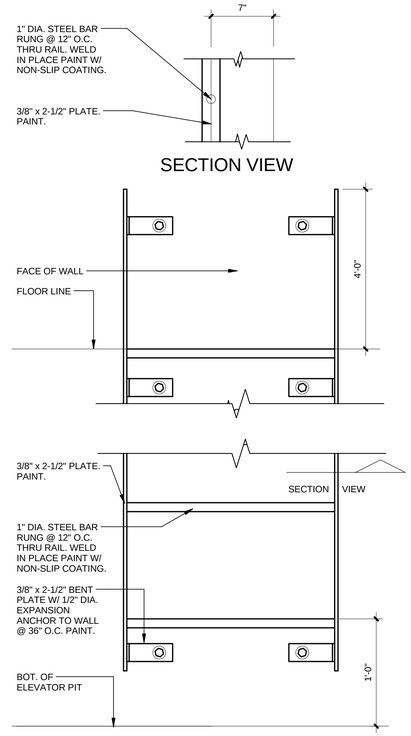

ACCESS LADDER DETAIL (C3 / AE550)

1 1/2" = 1'-0"

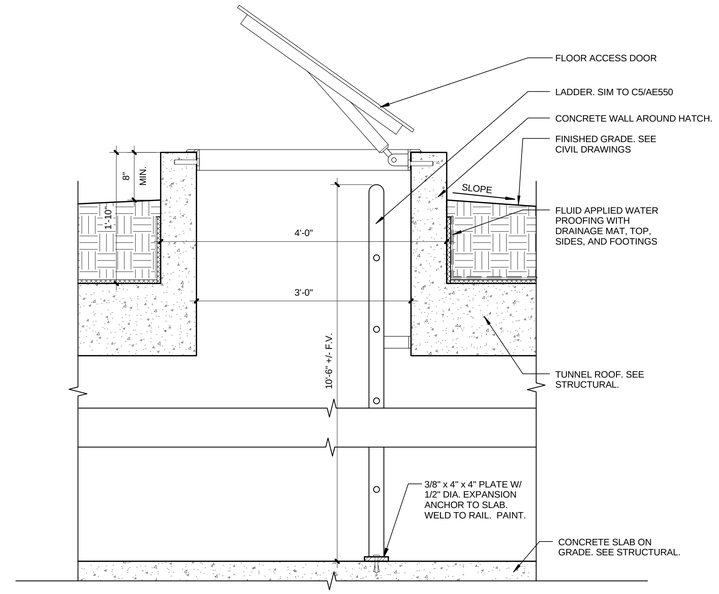

ESCAPE HATCH DETAIL (C5 / AE550)

1" = 1'-0"

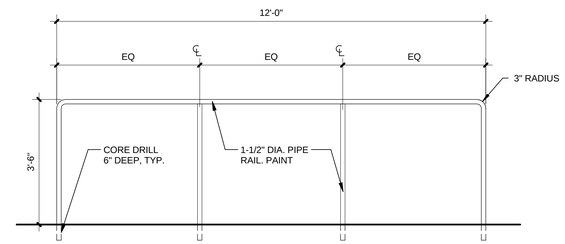

CANE DETECTION DETAIL (B5 / AE550)

1/2" = 1'-0"

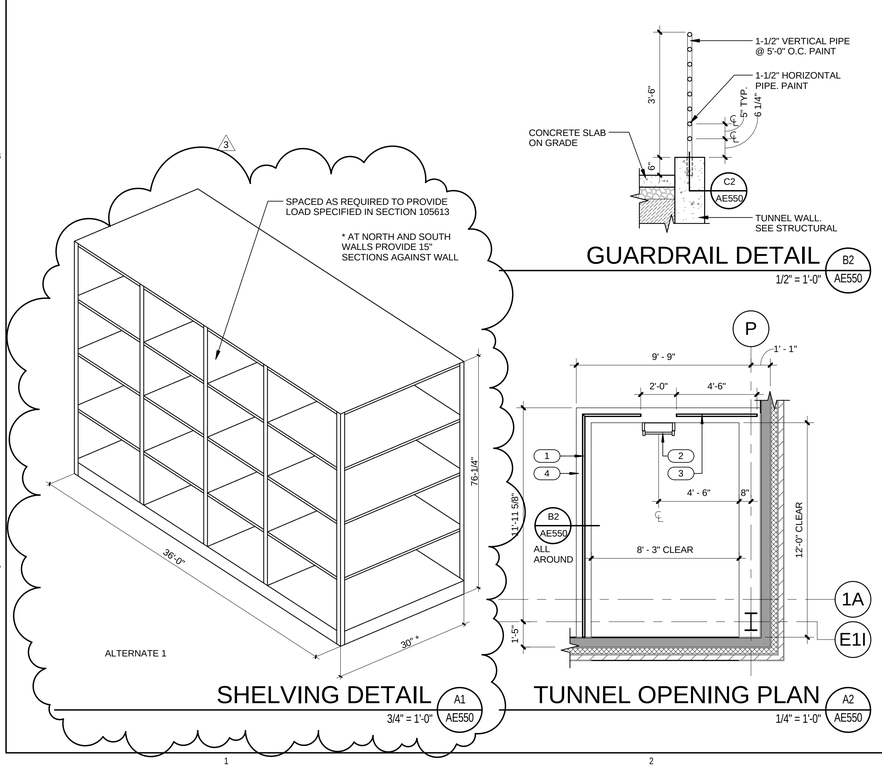

GUARDRAIL DETAIL (B2 / AE550)

1/2" = 1'-0"

SHELVING DETAIL (A1 / AE550)

3/4" = 1'-0"

TUNNEL OPENING PLAN (A2 / AE550)

1/4" = 1'-0"

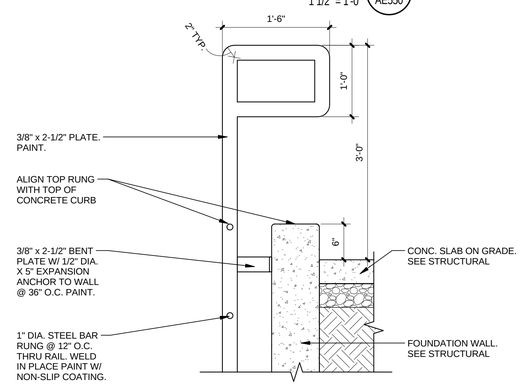

LADDER DETAIL (B4 / AE550)

1" = 1'-0"

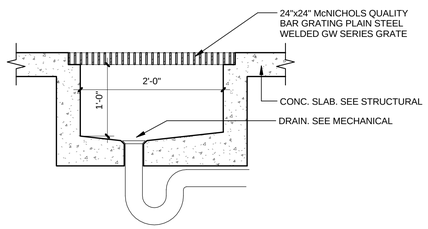

SUMP PIT DETAIL (A4 / AE550)

1" = 1'-0"

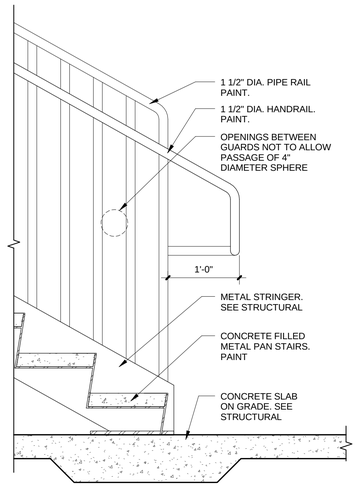

STAIR DETAIL (A5 / AE550)

1" = 1'-0"

CRSA
649 E. South Temple
Salt Lake City, UT 84102
801.355.5915

MWL
11798 N. Lakeridge Pkwy.
Ashland, VA 23005
804-228-7473

State of Utah
Department of Administrative Services
Division of Facilities Construction & Management
4110 State Office Building
Salt Lake City, Utah 84114
Phone: (801) 538 - 3018
Fax: (801) 538 - 3267

DFCM APPROVAL STAMP

STATE OF UTAH #134096 MEHRDAD SAMIE LICENSED ARCHITECT
04-28-2014
ARCHITECT-ENGINEER STAMP

Unified State Laboratory Module 2

4451 South 2700 West, Taylorsville, UT 84118

DFCM #: 13020300

Project #: B13-024

DATE:	ISSUE TYPE:
APRIL 21, 2014	BID SET
MAY 21, 2015	ADD # 3
CHECKED BY	J. NIELSEN
DRAWN BY	F. PITORE

DETAILS

AE550

VOLUME 1

C:\Users\fernando\Documents_A_13024_Modi_2013_fernando.rvt
5/20/2015 8:53:55 PM

DOOR SCHEDULE

DOOR #	SIZE	FIRE RATING	FRAME TYPE FRAME	DOOR TYPE PANEL	COMMENTS
100N	3'-0"x8'-0"		F-AL	P-AL1	
100TE	3'-0"x7'-0"		F-HM3	P-HM1	
100	3'-6"x8'-0"		F-AL	P-AL1	
100A	3'-6"x8'-0"		F-AL	P-AL1	
100B	3'-0"x7'-0"	60 MIN.	F-HM	P-W	
100D	3'-6"x7'-0"		F-HM	P-W	
100E	3'-0"x7'-0"		F-HM	P-W	
100F	3'-0"x7'-0"		F-HM	P-W	
100G	3'-0"x7'-0"		F-HM	P-W	
100H	3'-0"x7'-0"		F-AL	P-AL1	
100HA	3'-0"x7'-0"		F-AL	P-AL1	
100J	3'-0"x7'-0"	60 MIN.	F-HM	P-W	
100JA	3'-0"x7'-0"		F-HM6	P-HM1	
100K	(2) 3'-0"x7'-0"		F-HM1	P-W4	
100L	3'-6"x8'-0"	60 MIN.	F-HM	P-W	
100LA	3'-6"x8'-0"	60 MIN.	F-HM	P-W	
100M	3'-6"x8'-0"	60 MIN.	F-HM	P-W	
100NA	3'-0" x 7'-0"		F-HM	P-W3	
100P	3'-0"x7'-0"	120 MIN.	F-HM5	P-W	
100PA	3'-0"x7'-0"		F-HM6	P-HM1	
100Q	(2) 4'-0"x7'-0"	90 MIN.	F-HM1	P-HM2	
100R	3'-6"x7'-0"		F-HM	P-W2	
100S	5'-0"x7'-0"		F-AL1	P-AL2	ICU DOOR
100T	3'-0"x7'-0"		F-HM6	P-HM1	
100TA	6'-0"x10'-0"	60 MIN.		P-R1	1 HR. FIRE RATED OVERHEAD COILING DOOR
100TC	3'-6"x7'-0"	60 MIN.	F-HM	P-W	
100TD	3'-0"x7'-0"		F-HM6	P-HM1	
100X	2'-0" x 7'-0"		F-HM	P-W	
101	3'-0"x7'-0"		F-HM	P-W2	
102	3'-0"x7'-0"		F-AL	P-AL1	
102A	3'-0"x7'-0"		F-HM	P-W2	
102B	3'-0" x 7'-0"		F-AL	P-W	
102C	3'-0" x 7'-0"		F-AL	P-W	
102D	3'-0" x 7'-0"		F-AL	P-W	
102E	3'-0" x 7'-0"		F-AL	P-W	
102F	3'-0"x7'-0"		F-HM	P-W2	
102FA	3'-0"x7'-0"		F-AL	P-AL1	
102G	3'-0"x7'-0"		F-HM	P-W	
102H	3'-0"x7'-0"		F-HM	P-W2	
102J	3'-0" x 7'-0"		F-HM	P-W3	
103	3'-0"x7'-0"		F-HM	P-W	
104	3'-0" x 7'-0"		F-AL	P-W	
104A	3'-0"x7'-0"		F-AL	P-AL1	
104B	3'-0"x7'-0"		F-HM3	P-W	
105	3'-0"x7'-0"		F-HM	P-W	
106	3'-0"x7'-0"		F-HM	P-W	
107	3'-0"x7'-0"		F-HM	P-W	
108	3'-0"x7'-0"		F-HM	P-W	
109	3'-0"x7'-0"		F-HM	P-W	
110	3'-0"x7'-0"		F-HM	P-W	
111	3'-0"x7'-0"		F-HM	P-W2	
111A	3'-0"x7'-0"		F-HM	P-W	
111C	3'-0"x7'-0"		F-HM	P-W	
112	3'-6"x8'-0"		F-HM	P-HM3	
112A	3'-0"x7'-0"		F-HM6	P-HM1	
112B	12'-0"x12'-0"			P-R.	HIGH SPEED ROLLING DOOR
112C	12'-0"x12'-0"			P-R.	HIGH SPEED ROLLING DOOR
113	3'-6"x8'-0"		F-HM	P-HM3	
113A	3'-0"x7'-0"		F-HM6	P-HM1	
113B	12'-0"x12'-0"			P-R.	HIGH SPEED ROLLING DOOR
114	3'-0"x7'-0"		F-HM	P-W	
114A	(2) 3'-0"x7'-0"		F-HM1	P-HM2	
115	(2) 3'-0"x7'-0"		F-HM1	P-HM2	
115A	3'-0"x7'-0"		F-HM	P-W	
115B	3'-6"x7'-0		F-HM	P-W	
115C	3'-6"x7'-0		F-HM	P-W	
115D	(2) 3'-0"x7'-0"		F-HM4	P-HM4	4" JAMB FRAME
116	3'-0"x7'-0"		F-HM	P-W2	
116A	3'-0"x7'-0"		F-HM	P-W	
117	3'-0"x7'-0"		F-HM	P-W	
117A	3'-0"x7'-0"		F-HM	P-W	
118	3'-6"x7'-0"		F-HM	P-W2	
120	3'-0"x7'-0"		F-HM	P-W2	
120A	3'-0" x 7'-0"		F-AL	P-W	
121	3'-0"x7'-0"		F-HM3	P-HM1	
121A	12'-0"x12'-0"			P-R.	HIGH SPEED ROLLING DOOR
121B	12'-0"x12'-0"			P-R.	HIGH SPEED ROLLING DOOR
121C	6'-0"x8'-0"			P-R.	HIGH SPEED ROLLING DOOR
121D	12'-0"x12'-0"			P-R.	HIGH SPEED ROLLING DOOR
121E	12'-0"x12'-0"			P-R.	HIGH SPEED ROLLING DOOR
121F	3'-0"x7'-0"		F-HM3	P-HM1	
121G	5'-0"x7'-0"		F-AL1	P-AL2	ICU DOOR
122	5'-0"x7'-0"		F-AL1	P-AL2	ICU DOOR
122B	3'-0"x7'-0"		F-HM	P-W	
123	5'-0"x7'-0"		F-AL1	P-AL2	ICU DOOR
124	5'-0"x7'-0"		F-AL1	P-AL2X	ICU DOOR
124A	5'-0"x7'-0"		F-AL1	P-AL2	ICU DOOR
124B	5'-0"x7'-0"		F-AL1	P-AL2X	ICU DOOR
124C	3'-0"x7'-0"		F-HM	P-W2	
124D	3'-6"x7'-0"		F-HM	P-W2	
124E	3'-0"x7'-0"		F-HM	P-W	
126A	3'-0"x7'-0"		F-HM	P-W2	
126B	3'-0"x7'-0"		F-HM	P-W2	
127	3'-0"x7'-0"		F-HM	P-W	
127A	3'-0"x7'-0"		F-HM	P-W	
127B	2'-2" x 7'-0"		F-H.M.	P-W	
128	3'-0"x7'-0"		F-HM	P-W	
128A	3'-0"x7'-0"		F-HM	P-W	
129	3'-0"x7'-0"		F-HM	P-W	
130	3'-0"x7'-0"		F-HM	P-W2	
130A	3'-0" x 7'-0"		F-AL	P-W	
130B	3'-0" x 7'-0"		F-AL	P-W	
130C	3'-0" x 7'-0"		F-AL	P-W	
130D	3'-0" x 7'-0"		F-AL	P-W	
130E	3'-0" x 7'-0"		F-AL	P-W	
130F	3'-0" x 7'-0"		F-AL	P-W	
130G	3'-0" x 7'-0"		F-AL	P-W	
130H	3'-0" x 7'-0"		F-AL	P-W	
130J	3'-0" x 7'-0"		F-AL	P-W	
130K	3'-0"x7'-0"		F-HM	P-W2	
130L	3'-0" x 7'-0"		F-AL	P-W	
130M	3'-0" x 7'-0"		F-AL	P-W	
130N	3'-0" x 7'-0"		F-AL	P-W	
130P	3'-0"x7'-0"		F-HM	P-W2	
131	3'-0"x7'-0"		F-HM	P-W2	

DOOR SCHEDULE

DOOR #	SIZE	FIRE RATING	FRAME TYPE FRAME	DOOR TYPE PANEL	COMMENTS
131A	3'-0"x7'-0"		F-HM	P-W2	
131B	12'-6"x9'-0"			P-R2	ACCORDIAN DOOR
132	3'-0"x7'-0"		F-HM	P-W2	
133	3'-0"x7'-0"		F-HM	P-W2	
133A	3'-0"x7'-0"		F-HM	P-W2	
134	3'-0"x7'-0"		F-HM	P-W2	
134A	3'-0"x7'-0"		F-HM	P-W2	
135	3'-0"x7'-0"		F-HM	P-W	
136	3'-0"x7'-0"		F-HM	P-W	
137	3'-0"x7'-0"		F-HM	P-W	
138	3'-0"x7'-0"		F-AL	P-AL1	
138A	3'-0"x7'-0"		F-AL	P-M	
139	3'-0"x7'-0"		F-HM	P-W	
200	3'-0" x 7'-0"		F-HM	P-W3	
200A	3'-0"x7'-0"	60 MIN.	F-HM	P-W	
200B	3'-0"x7'-0"		F-HM	P-W	
200C	3'-0"x7'-0"	60 MIN.	F-HM	P-W	
200D	3'-0"x7'-0"		F-HM	P-W	
200E	3'-6"x7'-0"		F-HM	P-W2	
200F	3'-0"x7'-0"		F-HM	P-W2	
200H	3'-0"x7'-0"	120 MIN.	F-HM5	P-W	
200L	3'-0"x7'-0"		F-HM	P-W2	
200M	3'-6"x7'-0"		F-HM	P-W2	
200MA	3'-6"x7'-0"		F-HM	P-W2	
200MB	3'-0"x7'-0"		F-HM	P-W	
200N	3'-6"x7'-0"		F-HM	P-W2	
200P	3'-6"x7'-0"		F-HM	P-W2	
200RA	3'-6"x7'-0"		F-HM	P-W2	
200RB	3'-6"x7'-0"		F-HM	P-W2	
200T	3'-0"x7'-0"		F-HM	P-W	
200U	(2) 4'-0"x7'-0"	90 MIN.	F-HM1	P-HM2	
201A	3'-0" x 7'-0"		F-AL	P-W	
201B	3'-0" x 7'-0"		F-AL	P-W	
201C	3'-0" x 7'-0"		F-AL	P-W	
201D	3'-0" x 7'-0"		F-AL	P-W	
201E	3'-0"x7'-0"		F-HM	P-W2	
201F	3'-0"x7'-0"		F-HM	P-W2	
201G	3'-0"x7'-0"		F-HM	P-W2	
202	3'-0"x7'-0"		F-HM	P-W2	
202A	3'-0" x 7'-0"		F-AL	P-W	
203	3'-0"x7'-0"		F-HM	P-W	
203A	2'-0" x 7'-0"		F-HM	P-W	
204	3'-0"x7'-0"		F-HM	P-W	
205	3'-6"x7'-0"		F-HM	P-W2	
205A	3'-0"x7'-0"		F-HM	P-W2	
205B	3'-6"x7'-0"		F-HM	P-W2	
205C	3'-6"x7'-0"		F-1	P-M	REFER TO SPECIFICATIONS
205D	3'-0"x7'-0"		F-HM	P-W2	
206	3'-6"x7'-0"		F-HM	P-W2	
206A	3'-6"x7'-0"		F-HM	P-W2	
207	3'-0"x7'-0"		F-HM	P-W2	
207A	3'-0" x 7'-0"		F-AL	P-W	
208	3'-0" x 7'-0"		F-AL	P-W	
208A	3'-0"x7'-0"		F-HM	P-W2	
208B	3'-0"x7'-0"		F-HM	P-W2	
208C	3'-0"x7'-0"		F-HM	P-W	
208D	3'-0" x 7'-0"		F-AL	P-W	
208E	3'-0"x7'-0"		F-HM	P-W	
208F	3'-0"x7'-0"		F-HM	P-W2	
209	3'-6"x7'-0"		F-HM	P-W2	
209A	3'-0" x 7'-0"		F-AL	P-W	
209B	3'-0"x7'-0"		F-HM	P-W2	
210	(2) 3'-0"x7'-0"		F-HM1	P-HM2	
210A	(2) 3'-0"x7'-0"		F-HM1	P-HM2	
210B	3'-0"x7'-0"		F-HM	P-W	
211	3'-0"x7'-0"		F-HM	P-W2	
211A	3'-6"x7'-0		F-HM	P-W	
211B	3'-6"x7'-0"		F-HM	P-W2	
211C	3'-0"x7'-0"		F-HM	P-W	
212	3'-6"x7'-0"		F-HM	P-W2	
212A	3'-0"x7'-0"		F-HM	P-W	
212B	3'-0"x7'-0"		F-HM	P-W	
212C	3'-0"x7'-0"		F-HM	P-W2	
213	3'-0"x7'-0"		F-HM	P-W2	
213A	3'-0"x7'-0"		F-HM	P-W	
213B	3'-0"x7'-0"		F-HM	P-W	
213E	3'-0"x7'-0"		F-HM	P-W	
214	3'-6"x7'-0"		F-HM	P-W2	
214A	3'-6"x7'-0"		F-HM	P-W2	
215	3'-6"x7'-0"		F-HM	P-W2	
215A	3'-0"x7'-0"		F-HM	P-W2	
215B	3'-0"x7'-0"		F-HM	P-W2	
216	3'-0"x7'-0"		F-HM	P-W2	
300	(2) 3'-0"x7'-0"		F-HM1	P-W4	
300A	3'-0"x7'-0"	60 MIN.	F-HM	P-W	
300B	3'-0"x8'-0"		F-AL	P-AL1	
300C	3'-0"x7'-0"		F-HM	P-W	
300D	3'-0"x7'-0"		F-HM	P-W	
300E	3'-0"x7'-0"		F-HM	P-W	
300F	3'-0"x7'-0"		F-HM	P-W	
300G	3'-0" x 7'-0"		F-HM	P-W3	
300H	3'-0"x7'-0"	120 MIN.	F-HM5	P-W	
300L	3'-0"x7'-0"		F-HM	P-W	
300M	(2) 3'-0"x7'-0"		F-HM1	P-W1	
300N	(2) 3'-0"x7'-0"		F-HM1	P-W1	
300Q	3'-0"x7'-0"		F-HM	P-W	
300R	(2) 4'-0"x7'-0"	90 MIN.	F-HM1	P-HM2	
301	3'-0"x7'-0"		F-HM	P-W2	
301A	3'-6"x7'-0"		F-HM	P-W3	
301B	3'-6"x7'-0"		F-HM	P-W3	
301C	3'-6"x7'-0"		F-HM	P-W3	
302	3'-6"x7'-0"		F-HM	P-W3	
302A	3'-6"x7'-0"		F-HM	P-W3	
303	3'-0"x7'-0"		F-HM	P-W2	
303A	3'-0"x7'-0"		F-HM	P-W2	
304	3'-0"x7'-0"		F-HM	P-W2	
307	3'-0"x7'-0"		F-HM	P-W	
307A	2'-0" x 7'-0"		F-HM	P-W	
308	3'-0"x7'-0"		F-HM	P-W	
309	3'-0"x7'-0"		F-HM	P-W2	
309A	3'-0" x 7'-0"		F-AL	P-W	
309B	3'-0"x7'-0"		F-HM	P-W	
310	3'-0"x7'-0"		F-HM	P-W2	
310A	3'-0"x7'-0"		F-HM	P-W2	
310C	3'-0" x 7'-0"		F-AL	P-W	
310D	3'-0" x 7'-0"		F-AL	P-W	

DOOR SCHEDULE

DOOR #	SIZE	FIRE RATING	FRAME TYPE FRAME	DOOR TYPE PANEL	COMMENTS
311	3'-6"x7'-0"		F-HM	P-W3	
311A	3'-0"x7'-0"		F-HM	P-W2	
311C	3'-6"x7'-0"		F-HM	P-W3	
311D	3'-0"x7'-0"		F-HM	P-W2	
312	3'-6"x7'-0"		F-HM	P-W3	
312A	3'-6"x7'-0"		F-HM	P-W3	
313	3'-6"x7'-0"		F-HM	P-W3	
313A	3'-6"x7'-0"		F-HM	P-W3	
314	3'-6"x7'-0"		F-HM	P-W3	
314A	3'-6"x7'-0"		F-HM	P-W3	
315	3'-6"x7'-0"		F-HM	P-W3	
315A	3'-0"x7'-0"		F-HM	P-W2	
315C	3'-0"x7'-0"		F-HM	P-W2	
315D	3'-0"x7'-0"		F-HM	P-W2	
316	3'-0"x7'-0"		F-HM	P-W2	
317	3'-0" x 7'-0"		F-AL	P-W	
319	3'-0" x 7'-0"		F-AL	P-W	
400B	3'-0"x7'-0"	120 MIN.	F-HM5	P-W	
401	3'-0"x7'-0"		F-HM3	P-HM1	
402	3'-6"x8'-0"		F-HM	P-W	
403	3'-6"x7'-0		F-HM	P-W	

CRSA

649 E. South Temple
Salt Lake City, UT 84102
801.355.5915

MWL

11798 N. Lakeridge Pkwy.
Ashland, VA 23005
804-228-7473

State of Utah
Department of Administrative Services
Division of Facilities Construction & Management
4110 State Office Building
Salt Lake City, Utah 84114
Phone: (801) 538 - 3018
Fax: (801) 538 - 3267

DFCM APPROVAL STAMP

STATE OF UTAH #134096 MEHRDAD SAMII LICENSED ARCHITECT

04-28-2014

ARCHITECT-ENGINEER STAMP

Unified State Laboratory Module 2

4451 South 2700 West,
Taylorsville, UT 84118

DFCM #: 13020300

Project #: B13-024

DATE:	ISSUE TYPE:
APRIL 21, 2014	BID SET
MAY 21, 2015	ADD # 3

CHECKED BY	J. NIELSEN
DRAWN BY	F. PITORE

DOOR SCHEDULE

AE601

VOLUME 1

C:\Users\fernando\Documents_A_13024_Modil_2013_fernando.rvt
5/20/2015 8:53:57 PM

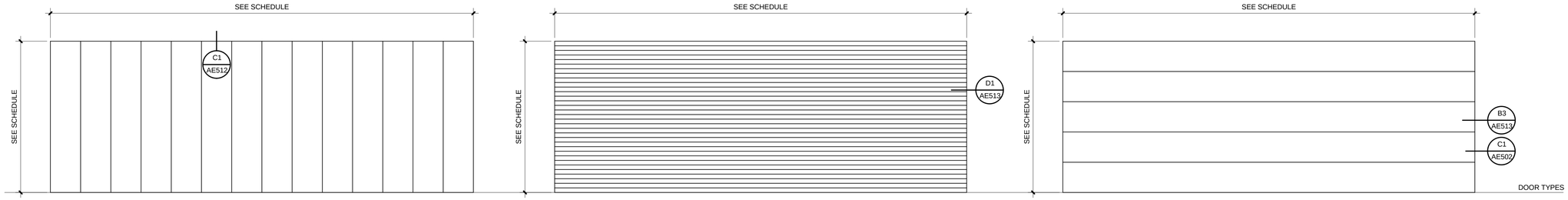

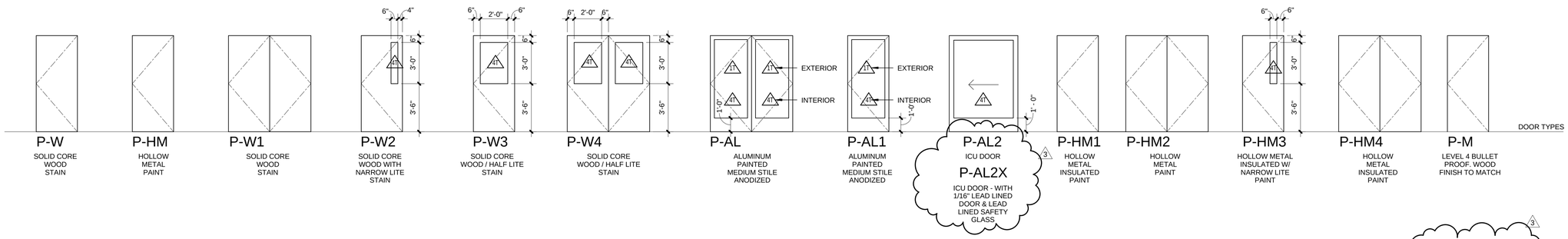

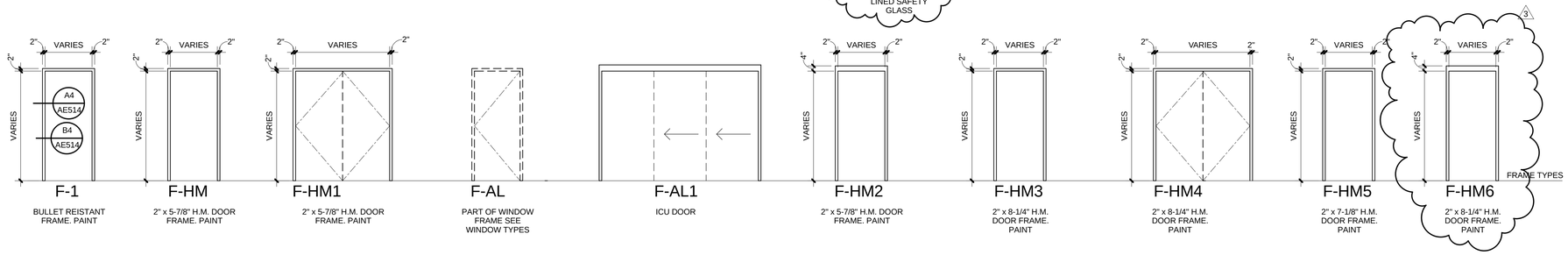

CRSA
649 E. South Temple
Salt Lake City, UT 84102
801.355.5915

MWL
11798 N. Lakeridge Pkwy.
Ashland, VA 23005
804-228-7473

State of Utah
Department of Administrative Services
Division of Facilities Construction & Management
4110 State Office Building
Salt Lake City, Utah 84114
Phone: (801) 538 - 3018
Fax: (801) 538 - 3267

DFCM APPROVAL STAMP

STATE OF UTAH #134096 MEHRDAD SAMIE LICENSED ARCHITECT
04-28-2014
ARCHITECT-ENGINEER STAMP

Unified State Laboratory Module 2

4451 South 2700 West, Taylorsville, UT 84118

DFCM #: 13020300

Project #: B13-024

DATE:	ISSUE TYPE:
APRIL 21, 2014	BID SET
MAY 21, 2015	ADD # 3

CHECKED BY	J. NIELSEN
DRAWN BY	F. PITORE

DOOR TYPES

AE602

VOLUME 1

C:\Users\fernando\Documents_A_13024_Modil_2013_fernando.rvt
5/20/2015 8:53:59 PM

ACCESSORY SCHEDULE (BASIS OF DESIGN)

ITEM	MAKE / MODEL	OPOI	OPCI	CPCI	ROOM
BENCH	SECTION 10 5133			X	107, 108, 109, 110
CUBICLE CURTAIN	NELSON ECLIPSE ROOM DARKENING FABRIC CEILING MOUNTED TRACK 1200LT			X	205 (9) TOTAL. SEE PLAN. (4) TO END ON TOP OF COUNTER (48" A.F.F. RE: INTERIOR LAB DRAWINGS) (5) TOTAL HEIIGHT
CUBICLE CURTAIN	NELSON ECLIPSE ROOM DARKENING FABRIC CEILING MOUNTED TRACK 1200LT			X	112 - 113 (CURTAIN DIVIDES BOTH ROOMS) CURTAIN HEIGHT FROM STRUCTURE TO FLOOR 12'-6" +/- F.V.
FOLDING SEAT	BOBRICK B-5191			X	127, 128 (1 EACH ROOM)
FOLDING SHOWER SEAT	BOBRICK B-518			X	127, 128 (1 EACH ROOM)
GRAB BAR 18"	BOBRICK B-5806 x 18			X	105, 106, 107, 108, 109, 116A, 117A, 127, 128, 137, 139, 203, 204, 307, 308
GRAB BAR 30"	BOBRICK B-5806 x 30			X	127, 128
GRAB BAR 36"	BOBRICK B-5806 x 36			X	105, 106, 107, 108, 109, 116A, 117A, 127, 128, 137, 139, 203, 204, 307, 308
GRAB BAR 42"	BOBRICK B-5806 x 42			X	105, 106, 107, 108, 109, 116A, 117A, 127, 128, 137, 139, 203, 204, 307, 308
MIRROR 24" x 36"	BOBRICK B-165 2436			X	105, 106, 107, 108, 109, 116A, 117A, 127, 128, 137, 139, 203, 204, 307, 308
MOP RACK 24"	BOBRICK B-239x34			X	100E, 122B, 124E, 210, 300E
PAPER TOWEL DISPENSER		X			105, 106, 107, 108, 109, 116A, 117A, 127, 128, 137, 139, 203, 204, 307, 308
ROBE HOOK	BOBRICK, B-672			X	107, 108, 109 (2 EACH ROOM)
ROLLER SHADES (MANUAL)	VERTILUX POLYSCREEN VISION 550, COLOR WHITE GRAY (98) OPACITY 5%			X	101,101A, 102A, 102B, 102C, 102D, 102E, 104, 111, 120, 120A, 124, 124A, 130A, 130B, 130C, 130D, 130E, 130F, 130G, 130H, 130J, 130K, 130P, 138, 201, 201A, 201B, 201C, 201D, 202, 202A, 208D, 209, 209A, 211, 212, 213, 215, 216, 217, 301A, 301B, 301C, 302, 303A, 304, 304A, 306, 309, 309A, 310, 310B, 310C, 310D, 311, 311C, 312, 312A, 313, 314, 315, 315A, 316
ROLLER SHADES (MANUAL)	VERTILUX POLYSCREEN VISION 550, COLOR WHITE GRAY (98) OPACITY 0%			X	205
ROLLER SHADES (MOTORIZED)	VERTILUX POLYSCREEN VISION 550, MOTORIZED DUAL SHADE			X	102F ALL WINDOWS
SANITARY NAPKIN DISPENSER	BOBRICK B-3706			X	105, 128, 203, 307
SANITARY NAPKIN DISPOSAL	BOBRICK B-270			X	105, 128, 203, 307
SHOWER CURTAIN	BOBRICK, B-204-1 & B-204-3			X	107, 108, 109 (1 EACH ROOM)
SHOWER CURTAIN ROD	BOBRICK B-6047 x 36			X	127, 128 (1 EACH ROOM)
SHOWER CURTAIN ROD (SQUARE)	WHITTINGTON NEO ANGLE SHOWER ROD WITH CEILING SUPPORT - 36" x 16" x 36"			X	107, 108, 109 (1 EACH ROOM)
SOAP DISH	BOBRICK, B-680			X	107, 108, 109 (1 EACH ROOM)
SOAP DISPENSER		X			105, 106, 107, 108, 109, 116A, 117A, 127, 128, 137, 139, 203, 204, 307, 308
TOILET PAPER DISPENSER		X			105, 106, 107, 108, 109, 116A, 117A, 127, 128, 137, 139, 203, 204, 307, 308
TOWEL SHELF	BOBRICK, B-676 W24			X	107, 108, 109 (1 EACH ROOM)
WHITEBOARD 4' x 4'	ADP LEMCO/SKU202AD			X	115, 207
WHITEBOARD 4' x 5'	ADP LEMCO/SKU202AE			X	134, 136
WHITEBOARD 4' x 8'	ADP LEMCO/SKU202AH			X	102F, 111, 131

2 2 2 2

GENERAL NOTES

- SEE IL SHEETS AND SPEC SECTION 11 600 FOR ACCESSORIES IN LABORATORY SPACES

EQUIPMENT SCHEDULE

ITEM	OPOI	OPCI	CPCI	ROOM
REFRIGERATOR	X			104; 316
MICROWAVE	X			104; 316

FINISH LEGEND

ITEM	PRODUCT	SPECIFICATION (BASIS OF DESIGN)	NOTES
WALLS			
P1	PAINT COLOR 1	SHERWIN WILLIAMS (SW 7064) PASSIVE (E75)	FOR USE ON FIELD WALLS
P2	PAINT COLOR 2	SHERWIN WILLIAMS (SW 7007) CEILING BRIGHT WHITE (E16)	FOR PRIMARY USE ON CEILINGS
P3	PAINT COLOR 3	SHERWIN WILLIAMS (SW 6225) SLEEPY BLUE (FN226)	LEVEL 01 LIGHT ACCENT
P4	PAINT COLOR 4	SHERWIN WILLIAMS (SW 6226) LANGUID BLUE (FN227)	LEVEL 01 DARK ACCENT
P5	PAINT COLOR 5	SHERWIN WILLIAMS (SW 6500) OPEN SEAS (B-G/B/83)	LEVEL 02 LIGHT ACCENT
P6	PAINT COLOR 6	SHERWIN WILLIAMS (SW 6494) LAKESHORE (B-G/B/70)	LEVEL 02 DARK ACCENT
P7	PAINT COLOR 7	SHERWIN WILLIAMS (SW 6443) RELISH (Y-G/G/120)	LEVEL 03 LIGHT ACCENT
P8	PAINT COLOR 8	SHERWIN WILLIAMS (SW 6444) LOUNGE GREEN (Y-G/G/121)	LEVEL 03 DARK ACCENT
P9	PAINT COLOR 9	SHERWIN WILLIAMS (SW 6349) PENNYWISE (R-O/O/100)	GENERAL FOR USE IN CONFERENCE, LIBRARY, BREAK AND RESTROOMS
P10	PAINT COLOR 10	SHERWIN WILLIAMS (SW 6382) CEREMONIAL GOLD (Y-O/Y/107)	GENERAL ACCENT FOR USE IN CONFERENCE, LIBRARY, BREAK AND RESTROOMS
C1	CONCRETE NO FINISH	SEE STRUCTURAL DRAWINGS	
T1	WALL TILE 1	8"X20" DALTILE "IDENTITY" GLAZED CERAMIC TILE GLOSS & MATTE FINISH COLOR PARAMOUNT WHITE (MY60)	SEE DETAIL A3/AE560 FOR INSTALLATION INSTRUCTIONS IN RESTROOMS. MAPEI GROUT, COLOR AVALANCHE (038).
T2	WALL TILE 2	4"X8", 4"X12" DALTILE "RITTENHOUSE SQUARE" GLAZED CERAMIC TILE SEMI-GLOSS (0190) & MATTE FINISH (0790) COLOR ARCTIC WHITE	SEE DETAIL C3/AE560 FOR INSTALLATION INSTRUCTIONS IN RESTROOMS. MAPEI GROUT, COLOR AVALANCHE (038).
EP	EPOXY RESIN WALL COATING	COLOR TO BE DETERMINED BY ARCHITECT	FOR USE IN AUTOPSY, BODY RECEIVING, TISSUE RECOVERY, SPECIAL PROCEDURE, XRAY
N	NO WALL FINISH		
FRP	WALL PANEL	REFER TO SPECIFICATIONS	48" HIGH ON ALL WALLS BEHIND MOP SINKS. 2
FLOORS			
CP1	CARPET 1	MOHAWK GROUP "JEAN MODULAR" 24"X24" CARPET TILE COLOR LOW RISE (966), JEAN (GT177)	
CP2	CARPET 2	MOHAWK GROUP "JEAN MODULAR" 24"X24" CARPET TILE COLOR LOW RISE (966), HEM (GT178)	
CP3	CARPET 3	MOHAWK GROUP "JEAN MODULAR" 24"X24" CARPET TILE COLOR LOW RISE (966), SELVEDGE (GT179)	
CP4	CARPET 4	MOHAWK GROUP "COLORBEAT MODULAR" 24"X24" CARPET TILE COLOR COLORBEAT (GT160), PARAKEET (646).	
MT	ENTRY MAT	LEE'S STEPUP WROUGHT IRON 438	
SC	SEALED CONCRETE	SEE SECTION 09 9123.4.6.A	ALL EXPOSED CONCRETE FLOORS
CP	DECK PAVERS	24"X24" ROOF DECK CONCRETE PAVERS, WESTILE PLAZA PAVER	
F1	TILE 1 - LARGE FORMAT ENTRY FLOOR	24"X24", 24"X48" DALTILE "EXHIBITION" PORCELAIN TILE UNPOLISHED & TEXTURED COLOR TREND GRAY (EX03)	SEE DETAIL A5/AE560 FOR INSTALLATION PATTERN. MAPEI GROUT, COLOR PEWTER (02).
F2	TILE 2 - RESTROOMS	12"X12", 12"X24" DALTILE "UNITY" COLORBODY PORCELAIN TILE POLISHED & UNPOLISHED COLOR ASH GRAY (P405)	USE 12"X12" POLISHED TILE IN ALL RESTROOMS AND LOCKER ROOMS U.N.O. SEE DETAIL C5/AE560 FOR INSTALLATION PATTERN IN LARGE RESTROOMS. MAPEI GROUT, COLOR PEWTER (02).
F3	SHOWER ROOM TILE	2"X2" DALTILE KEYSTONE SUEDE GRAY (D182).	MAPEI GROUT, COLOR PEWTER (02)
EF	EPOXY TERRAZZO FLOORING	STONHARD "STONRES RTX" FLOORING, COLOR TO BE DETERMINED BY ARCHITECT.	
RU	RUBBER FLOORING - NOSE & TREAD SYSTEM	MOHAWK GROUP STAIR TREADS TRUE, NOSE & TREAD RUBBER FLOORING SYSTEM, SEE SPEC SECTION 09 6513.	TO BE USED ON STAIR NOSE, TREAD AND LANDINGS ONLY. COLOR COAL (TRR-32)
R1	RESILIENT FLOORING 1	GERFLOR "MIPOLAM SYMBIOZ" 2M VINYL SHEET FLOORING COLOR SEA STORM (6044)	GENERAL USE FOR HALLWAYS, OPEN LABS, ETC. HEAT WELD RESILIENT FLOORING SEAMS
R2	RESILIENT FLOORING 2	GERFLOR "MIPOLAM SYMBIOZ" 2M VINYL SHEET FLOORING COLOR BLACK DIAMOND (6059)	ACCENT COLOR FOR HALLWAY NICHES. HEAT WELD RESILIENT FLOORING SEAMS
R3	RESILIENT FLOORING 3	GERFLOR "MIPOLAM SYMBIOZ" 2M VINYL SHEET FLOORING COLOR BLUE SKY (6006)	LEVEL 01 ACCENT COLOR. HEAT WELD RESILIENT FLOORING SEAMS
R4	RESILIENT FLOORING 4	GERFLOR "MIPOLAM SYMBIOZ" 2M VINYL SHEET FLOORING COLOR LAGOON (6037)	LEVEL 02 ACCENT COLOR. HEAT WELD RESILIENT FLOORING SEAMS
R5	RESILIENT FLOORING 5	GERFLOR "MIPOLAM SYMBIOZ" 2M VINYL SHEET FLOORING COLOR GRASS (6017)	LEVEL 03 ACCENT COLOR. HEAT WELD RESILIENT FLOORING SEAMS
H	TRAFFIC COATING	SECTION 07 5500	ALL HOUSEKEEPING PADS SHOULD RECEIVE TRAFFIC COATING PRIOR TO EQUIPMENT INSTALLATION INCLUDING AIR HANDLERS.
BASE			
B1	RUBBER BASE COLOR 1	4" ROPPE 700 SERIES VINYL WALL BASE W/ STANDARD TOE PROFILE COLOR CHARCOAL (123)	
TB1	TILE BASE 1	6"X24", 6"X48" DALTILE "EXHIBITION" PORCELAIN TILE UNPOLISHED & TEXTURED COLOR TREND GRAY (EX03)	CUT TILE TO 6", ALIGN JOINTS W/ FLOOR TILE, CAP W/ ALUMINUM SCHLUTER STRIP RENO-U A100
TB2	TILE BASE 2	6"X12", 6"X24" DALTILE "UNITY" COLORBODY PORCELAIN TILE POLISHED & UNPOLISHED COLOR ASH GRAY (P405)	CUT TILE TO 6", ALIGN JOINTS W/ FLOOR TILE, CAP W/ ALUMINUM SCHLUTER STRIP RENO-U A100
IC	INTEGRAL COVE	WHERE INDICATED MEANS THAT FLOORING TURNS UP WALL TO CREATE 6" HIGH INTEGRAL COVE BASE	
N	NO BASE FINISH		
CEILINGS			
C1	CEILING 1	24"X24"X3/4" ARMSTRONG OPTIMA W/ INTERLUDE 9/16" XL HRC	
C2	CEILING 2	5/8" GYPSUM BOARD W/ PAINT COLOR 2	
C3	CEILING 3	24"X24"X3/4" ARMSTRONG HEALTHZONE ULTIMA	
C4	CEILING 4	SAME AS SFT	
C5	CEILING 5	8" CAST IN PLACE CONCRETE CEILING, SEE STRUCTURAL DRAWINGS.	
SFT	EXTERIOR SOFFIT	FIRESTONE UNA-CLAD 500 METAL SOFFIT FLUSH PANEL SYSTEM 12" WIDTH, COLOR CHARCOAL GRAY.	
SFT 2	EXTERIOR SOFFIT	ACM METAL SOFFIT PANEL SYSTEM. COLOR CHARCOAL GRAY.	
MISCELLANEOUS INTERIOR FINISHES			
	ACCORDIAN WALL PARTITION	ACCORDIAN WALL SYSTEM FINISH, MODERNFOLD SOUND MASTER (SM 12), ARCHITECT TO SELECT COLOR. SEE SPEC.	
	CABINETS	WILSONART COSMIC STRANDZ LAMINATE (4941K-18).	ALL ARCHITECTURAL CABINETS
	COUNTERTOP	CAMBRIA NATURAL QUARTZ COUNTERTOP, COLOR FIELDSTONE (2160).	ALL ARCHITECTURAL COUNTERTOPS
	LAB COUNTERTOP	EPOXY RESIN.	COLOR LEVELS 01 & 02 = BLACK (#06), LEVEL 03 = CHARCOAL GRAY (#13).
	TOILET PARTITION	STAINLESS STEEL	
	LAVATORY COUNTERTOP	CAMBRIA NATURAL QUARTZ COUNTERTOP, COLOR DEVON (2170). SEE SPEC.	COUNTERTOP FOR ALL BATHROOMS & LOCKER ROOMS
	WINDOW SILL 1	WINDOW SILL 2 CAMBRIA NATURAL QUARTZ COUNTEROP, COLOR TEMPLETON (0230). SEE SPEC.	WINDOW SILL @ ALL OTHER INTERIOR WINDOWS
	WINDOW SILL 2	EPOXY RESIN.	USE AT ALL LABORATORY WINDOWS PER DETAIL 8/IL503, COLOR LEVELS 01 & 02 BLACK (06), LEVEL 03 CHARCOAL GRAY (13).
EXTERIOR FINISHES			
CA	CONCRETE MASONRY UNIT A	4"X8"X16" W/ SINGLE VERTICAL KERF IN CENTER OF 16" FACE, BUEHNER BLOCK COMPANY CONCRETE MASONRY UNITS HONED, COLOR GRANITE.	STACK BOND INSTALLATION PATTERN
CB	CONCRETE MASONRY UNIT B	4"X8"X16" BUEHNER BLOCK COMPANY CONCRETE MASONRY UNITS HONED, COLOR EBONY.	RUNNING BOND INSTALLATION PATTERN
CC	CONCRETE MASONRY UNIT C	HONED, MATCH EXISTING COLOR @ MODULE I	
CD	CONCRETE MASONRY UNIT D	HONED, MATCH EXISTING COLOR @ MODULE I	
EF	EXTERIOR FENCING	STANDARD GALVANIZED CORRUGATED METAL PANELS. SEE SPEC.	SEE LANDSCAPE DRAWINGS
A	METAL PANEL A	FIRESTONE UNA-CLAD DELTA CONCEALED FASTENER PANEL SYSTEM 12" (CFP-12), COLOR PATINA GREEN.	TO BE INSTALLED VERTICALLY
B	METAL PANEL B	ACM METAL PANEL SYSTEM, COLOR CHARCOAL GRAY. SEE SPEC.	
E	METAL PANEL E	FIRESTONE UNA-CLAD DELTA CONCEALED FASTENER PANEL SYSTEM 16" (CFP-16F), COLOR CHARCOAL GRAY. SEE SPEC.	TO BE INSTALLED HORIZONTALLY

3

CRSA
649 E. South Temple
Salt Lake City, UT 84102
801.355.5915

MWL
11798 N. Lakeridge Pkwy.
Ashland, VA 23005
804-228-7473

State of Utah
Department of Administrative Services
Division of Facilities Construction & Management
DFCM
4110 State Office Building
Salt Lake City, Utah 84114
Phone: (801) 538 - 3018
Fax: (801) 538 - 3267

DFCM APPROVAL STAMP

STATE OF UTAH #134098 MEHRDAD SAMIE LICENSED ARCHITECT
04.28.2014
ARCHITECT-ENGINEER STAMP

Unified State Laboratory Module 2

4451 South 2700 West, Taylorsville, UT 84118

DFCM #: 13020300

Project #: B13-024

DATE:	ISSUE TYPE:
APRIL 21, 2014	BID SET
MAY 15, 2015	ADD # 2
MAY 21, 2015	ADD # 3
CHECKED BY	J. Nielsen
DRAWN BY	F. PITORE

FINISH LEGEND & ACCESSORY SCHEDULE

AE610

VOLUME 1

C:\Users\fernando\Documents_A_13024_ModII_2013_fernando.rvt
5/20/2015 8:54:02 PM

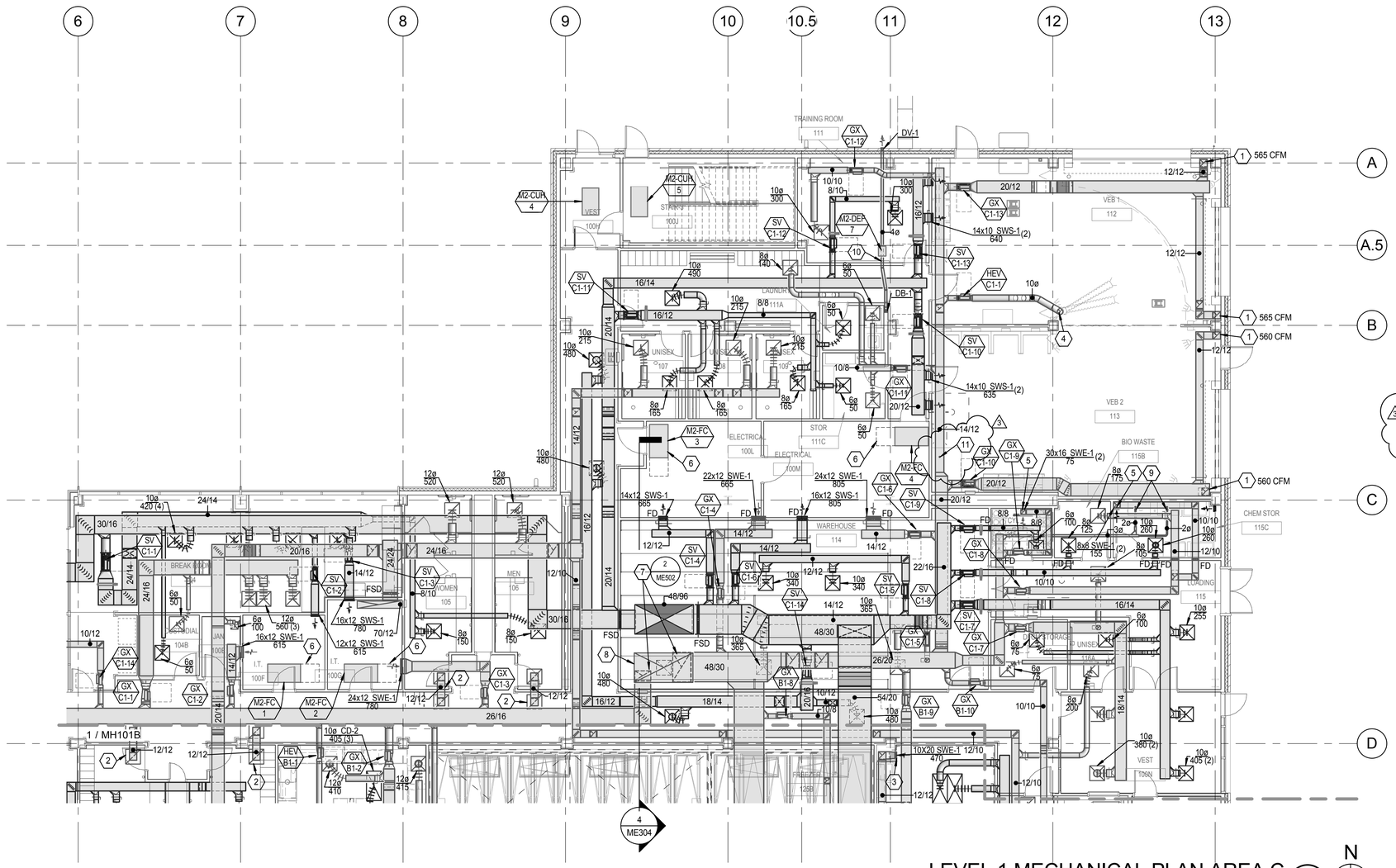

LEVEL 1 MECHANICAL PLAN AREA C

1/8" = 1'-0" (1 / MH101C)

N

KEYED NOTES

1. DROP DUCT DOWN TO WITHIN 1'-0" AFF. PROVIDE BALANCING DAMPER AND BALANCE TO AIRFLOW NOTED.
2. 24"X24" RETURN AIR GRILL (QTY. 2) WITH TRANSFER AIR DUCT FOR MAKEUP AIR. SIZE DUCT AS NOTED.
3. DROP DUCT DOWN AND INSTALL LOW SIDEWALL EXHAUST GRILL AT 1'-0" AFF. BALANCE TO AIRFLOW NOTED.
4. CONNECT EXHAUST DUCT TO SNORKEL WITH 8" DIA. DUCT. BALANCE TO 500 CFM. COORDINATE ACTUAL SIZE AND EXHAUST AIRFLOW RATE WITH EQUIPMENT SUPPLIER.
5. EXHAUST DUCT TO DROP THROUGH CEILING AND EXTEND TO FLOOR. INSTALL SIDEWALL EXHAUST GRILLES BETWEEN 3" -12" ABOVE THE FLOOR AND BETWEEN 3" – 12" BELOW THE CEILING (QTY 2). PROVIDE OBD IN SIDEWALL GRILLES AND BALANCE TO AIRFLOW NOTED.
6. MAINTAIN MANUFACTURER'S MINIMUM SERVICE CLEARANCES AS SHOWN.
7. EXHAUST DUCT TO PENETRATE EXHAUST RISER AND RISE UP 22" IN RISER.
8. WRAP EXHAUST DUCT IN SHAFT WITH TWO LAYERS OF 1-1/2" THICK FIRE RESISTIVE DUCT WRAP WITH A TWO HOUR RATING.
9. CONNECT TO FREESTANDING VENTED ACID STORAGE CABINET WITH 2" DIAMETER SCHEDULE 80 PVC. PVC SHALL BE CONNECTED TO EXHAUST DUCT AS SHOWN. PROVIDE AND INSTALL BUTTERFLY VALVE FOR BALANCING AND BALANCE TO 25 CFM. SEE LABORATORY PLANS FOR INSTALLATION DETAILS.
10. CLOTHES DRYER EXHAUST DUCT. EACH VERTICAL RISER SHALL BE PROVIDED WITH A MEANS FOR CLEANOUT. DUCT SHALL NOT BE CONNECTED OR INSTALLED WITH SHEET METAL SCREWS OR OTHER FASTENERS THAT WILL OBSTRUCT EXHAUST FLOW. THE DUCT SHALL HAVE A SMOOTH INTERIOR FINISH WITH THE MALE END OF THE DUCT AT OVERLAPPED JOINTS EXTENDING IN THE DIRECTION OF AIRFLOW IN ACCORDANCE WITH 2012 IMC SECTION 504.6.2. PROVIDE DUCT SUPPORTS EVERY 4 FT.
11. CONNECT TO SUPERGLUE FUMING CABINET WITH 2" DIAMETER SCHEDULE 80 PVC. PVC SHALL BE CONNECTED TO EXHAUST DUCT AS SHOWN. PROVIDE AND INSTALL BUTTERFLY VALVE FOR BALANCING TO 25 CFM. SEE LABORATORY PLANS FOR INSTALLATION DETAILS.

KEY PLAN

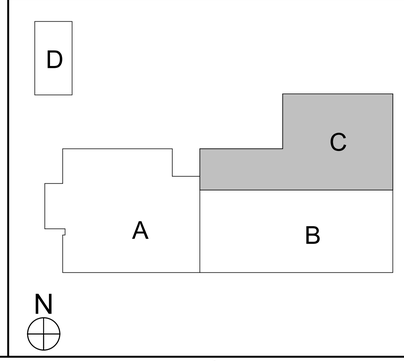

CRSA
649 E. South Temple
Salt Lake City, UT 84102
801.355.5915

MWL
11798 N. Lakeridge Pkwy.
Ashland, VA 23005
804-228-7473

State of Utah
Department of Administrative Services
Division of Facilities Construction & Management
4110 State Office Building
Salt Lake City, Utah 84114
Phone: (801) 538 - 3018
Fax: (801) 538 - 3267

DFCM APPROVAL STAMP

LICENSED PROFESSIONAL ENGINEER
No. 178893
DONALD K. BRADSHAW
STATE OF UTAH

ARCHITECT-ENGINEER STAMP

Unified State Laboratory Module 2

4451 South 2700 West, Taylorsville, UT 84118

DFCM #: 13020300

Project #: B13-024

DATE:	ISSUE TYPE:
April 21, 2014	BID SET
May 8, 2015	ADD # 1
May 14, 2015	ADD # 2
May 20, 2015	ADD # 3

CHECKED BY: S. Muir
DRAWN BY: DL

LEVEL 1 MECHANICAL PLAN AREA C

MH101C

VOLUME 2

D:_BIM\Local Files\13245-Unified Lab Mod IV\13-Mechanical-Central_DLineback.rvt
5/20/2015 3:05:27 PM

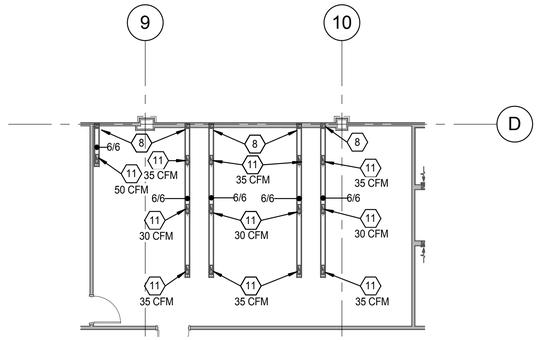

INSTRUMENT LAB 211B CABINET DUCT PLAN (2 / MH102B)

1/8" = 1'-0"

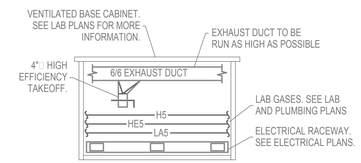

VENTILATED BASE CABINET DETAIL (3 / MH102B)

NOT TO SCALE

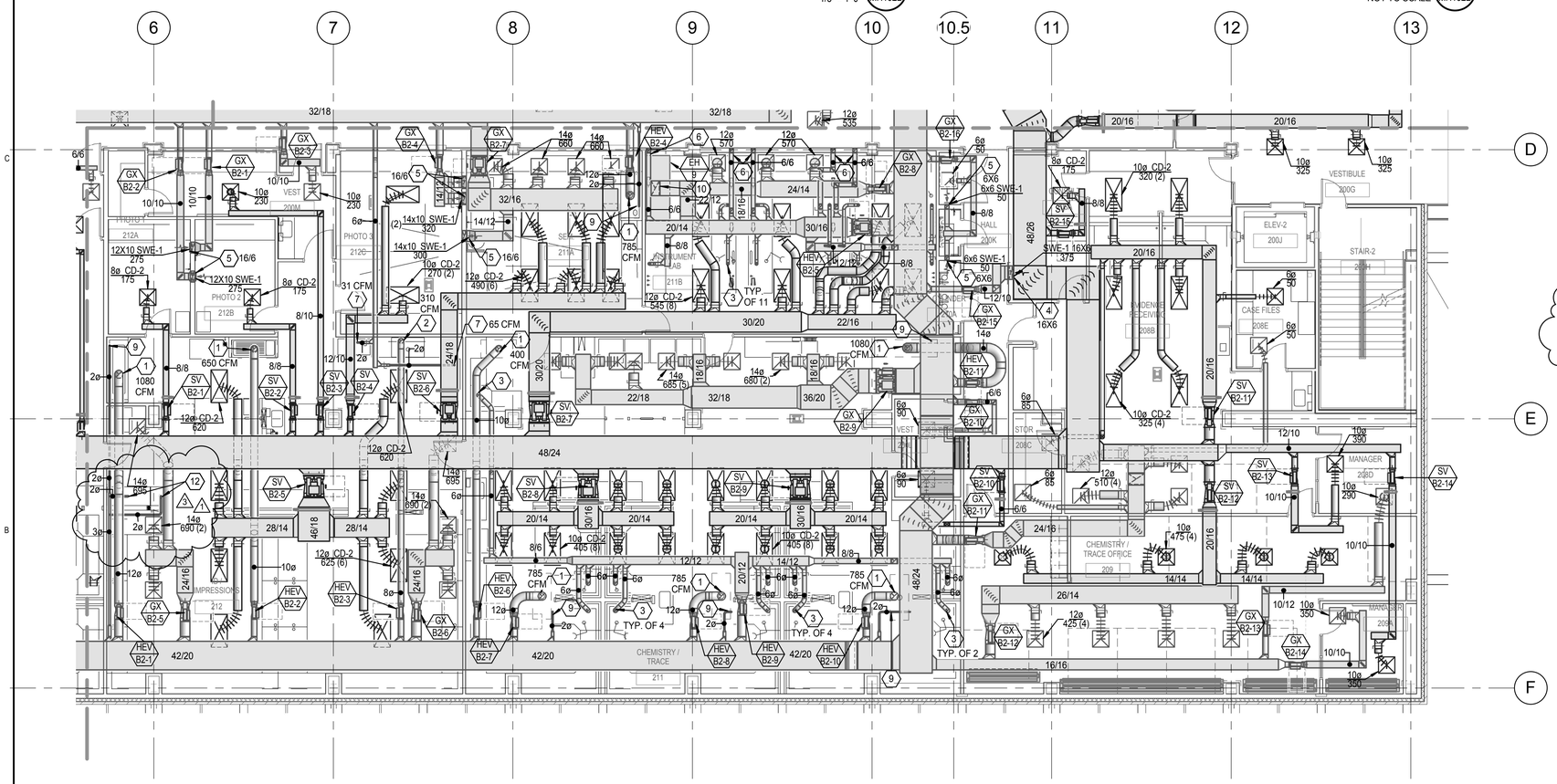

LEVEL 2 MECHANICAL PLAN AREA B (1 / MH102B)

1/8" = 1'-0"

N

KEYED NOTES

1. CONNECT EXHAUST DUCT TO FUME HOOD. INSTALL SASH STOP AT 18". BALANCE TO 100 FPM FACE VELOCITY AT 18" SASH HEIGHT. EXHAUST DUCT SHALL BE WELDED 304 STAINLESS STEEL FROM HOOD CONNECTION TO MEDIUM PRESSURE MAIN. APPROXIMATE EXHAUST AIRFLOW NOTED.
2. CONNECT EXHAUST DUCT TO POWDER HOOD VENTILATION STATION. BALANCE EXHAUST FLOW TO 100 FPM FACE VELOCITY AT SASH WORKING HEIGHT. EXHAUST DUCT SHALL BE WELDED 304 STAINLESS STEEL. FROM HOOD CONNECTION TO MEDIUM PRESSURE MAIN. APPROXIMATE AIRFLOW NOTED.
3. CONNECT EXHAUST DUCT TO SNORKEL WITH 4" DIA. DUCT. BALANCE TO 100 CFM. COORDINATE ACTUAL SIZE AND EXHAUST AIRFLOW RATE WITH EQUIPMENT SUPPLIER.
4. EXHAUST DUCT TO DROP DOWN IN 6" WALL CAVITY TO SIDEWALL EXHAUST GRILL. EXHAUST DUCT IN WALL SHALL BE OF THE SIZE NOTED. MOUNT SIDEWALL EXHAUST GRILL AT COUNTER TOP HEIGHT. COORDINATE EXACT HEIGHT WITH CASEWORK SUBMITTAL.
5. EXHAUST DUCT TO DROP DOWN IN 6" WALL CAVITY TO LOW SIDEWALL EXHAUST GRILL. EXHAUST DROP IN WALL SHALL BE OF THE SIZE NOTED. MOUNT LOW SIDEWALL EXHAUST GRILL AT 1'-0" AFF.
6. EXHAUST DUCT TO DROP DOWN IN WALL CAVITY TO SERVE THE VENTILATED BASE CABINETS. SEE 2/MH102B FOR CONTINUATION.
7. CONNECT TO EQUIPMENT EXHAUST CONNECTION WITH 2" DIAMETER SCHEDULE 80 PVC. PVC EXHAUST PIPE SHALL BE CONNECTED TO EXHAUST SYSTEM AS SHOWN. PROVIDE AND INSTALL BUTTERFLY VALVE FOR BALANCING. LOCATE IN VERTICAL RISER FOR ACCESSIBILITY. BALANCE TO AIRFLOW NOTED. CONFIRM EXHAUST REQUIREMENTS WITH EQUIPMENT MANUFACTURER.
8. EXHAUST DUCT TO DROP DOWN IN WALL FROM ABOVE. RUN HORIZONTALLY CONCEALED WITHIN THE VENTILATED BASE CABINETS. RUN DUCTWORK AS HIGH POSSIBLE WITHIN BASE CABINET. SEE DETAIL 3/MH102B.
9. CONNECT TO VENTED ACID STORAGE BASE CABINET WITH 2" DIAMETER SCHEDULE 80 PVC. PVC SHALL BE CONNECTED TO EXHAUST DUCT AS SHOWN. PROVIDE AND INSTALL BUTTERFLY VALVE FOR BALANCING AND BALANCE TO 25 CFM. SEE LABORATORY PLANS FOR INSTALLATION DETAILS.
10. CONNECT EXHAUST DUCT TO EXHAUST COLLAR ON CANOPY EXHAUST HOOD. BALANCE TO AIRFLOW NOTED IN EXHAUST HOOD SCHEDULE.
11. PROVIDE AND INSTALL 4" DIAMETER HIGH EFFICIENCY TAKEOFF WITH MANUAL BALANCING DAMPER ORIENTED DOWN, BALANCE TO AIRFLOW NOTED.
12. CONNECT TO DRYING CHAMBER EXHAUST COLLAR WITH 2" DIAMETER SCHEDULE 80 PVC. PVC SHALL BE CONNECTED TO EXHAUST MAIN AS SHOWN. PROVIDE AND INSTALL BUTTERFLY VALVE FOR BALANCING AND BALANCE TO 25 CFM. COORDINATE AIRFLOW AND EXHAUST CONNECTION SIZE WITH EQUIPMENT SUBMITTAL. SEE LABORATORY PLANS FOR INSTALLATION DETAILS. (3)

KEY PLAN

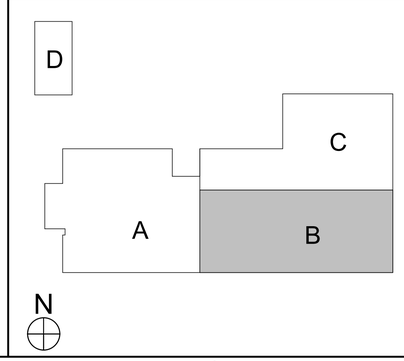

CRSA
649 E. South Temple
Salt Lake City, UT 84102
801.355.5915

MWL
11798 N. Lakeridge Pkwy.
Ashland, VA 23005
804-228-7473

State of Utah
Department of Administrative Services
Division of Facilities Construction & Management
4110 State Office Building
Salt Lake City, Utah 84114
Phone: (801) 538 - 3018
Fax: (801) 538 - 3267

DFCM APPROVAL STAMP

LICENSED PROFESSIONAL ENGINEER No. 178893 DONALD K. BRADSHAW STATE OF UTAH

ARCHITECT-ENGINEER STAMP

Unified State Laboratory Module 2

4451 South 2700 West, Taylorsville, UT 84118

DFCM #: 13020300

Project #: B13-024

DATE:	ISSUE TYPE:
April 21, 2014	BID SET
May 8, 2015	ADD # 1
May 14, 2015	ADD # 2
May 20, 2015	ADD # 3

CHECKED BY: S. Muir

DRAWN BY: DL

LEVEL 2 MECHANICAL PLAN AREA B

MH102B

VOLUME 2

D:_BIM\Local Files\13245-Unified Lab Mod II\V13-Mechanical-Central_DLineback.rvt
5/20/2015 9:53:44 AM

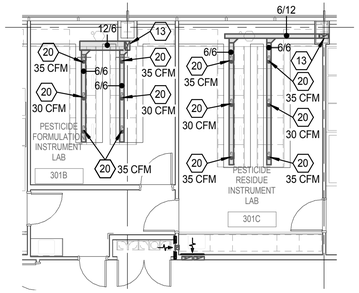

PESTICIDE LABS 301 B & C CABINET DUCT PLAN (2 / MH103A)
1/8" = 1'-0"

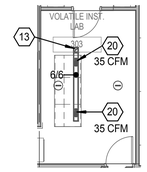

VOLATILE INST. LAB 303 DUCT PLAN (3 / MH103A)
1/8" = 1'-0"

KEYED NOTES CONT.

21 EXHAUST DUCT TO DROP DOWN IN 6" WALL CAVITY TO SIDEWALL EXHAUST GRILL. EXHAUST DUCT IN WALL SHALL BE OF THE SIZE NOTED. MOUNT SIDEWALL EXHAUST GRILL AT COUNTER TOP HEIGHT. COORDINATE EXACT HEIGHT WITH CASEWORK SUBMITTAL.

22 CONNECT TO LABORATORY EQUIPMENT WITH 2" DIAMETER FLEXIBLE EXHAUST DUCT. PROVIDE ESCUTCHEON AT CEILING PENETRATION AND PROVIDE RIGID DUCT ABOVE THE CEILING. PROVIDE BALANCING DAMPER AND BALANCE TO 25 CFM. COORDINATE EXHAUST CONNECTION SIZE AND AIRFLOW REQUIREMENTS WITH EQUIPMENT SUBMITTAL. EXHAUST DUCT TO BE INSTALLED ADJACENT TO ELECTRICAL AND PLUMBING DROPS.

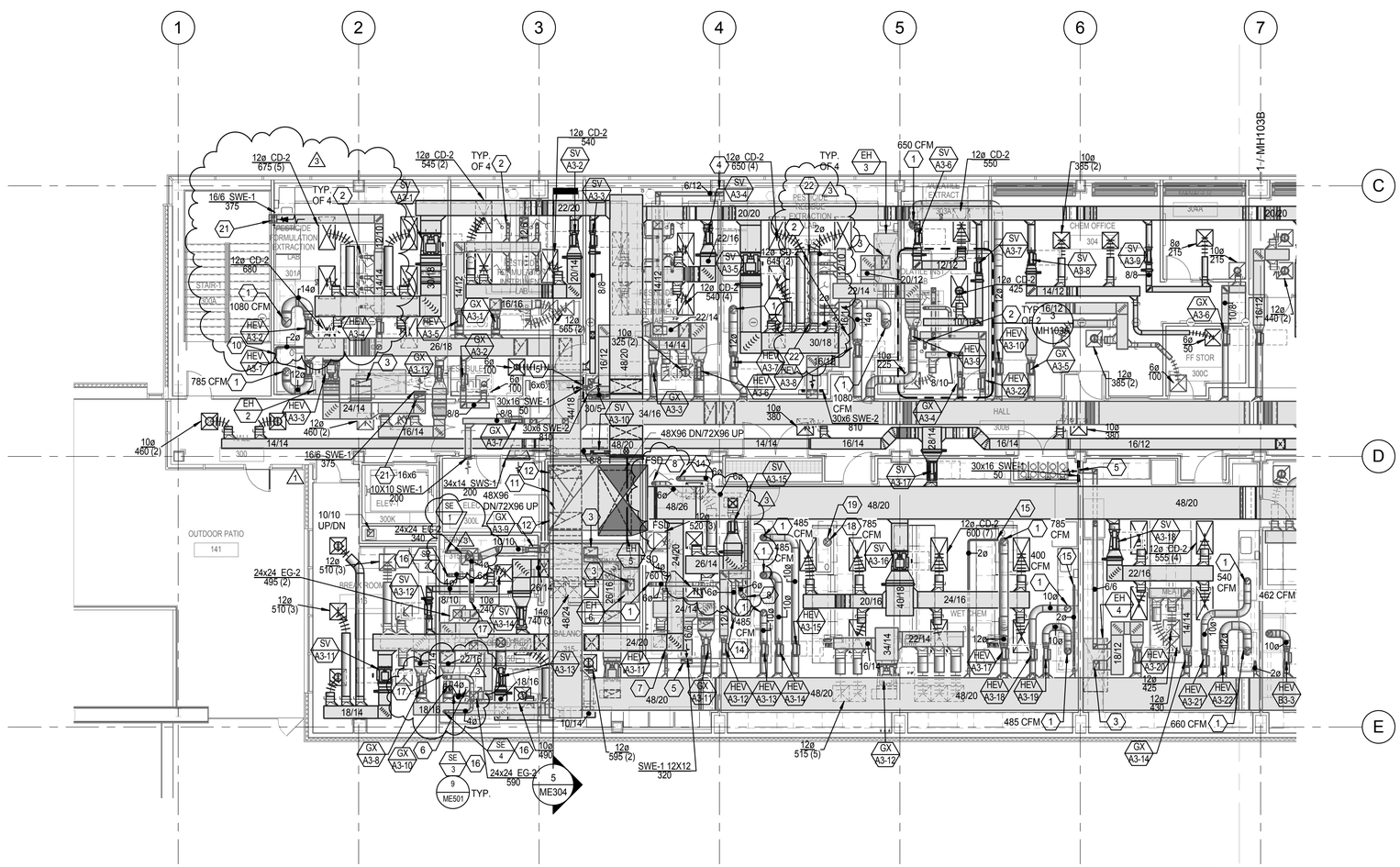

LEVEL 3 MECHANICAL PLAN AREA A (1 / MH103A)
1/8" = 1'-0"

N

KEYED NOTES

1 CONNECT EXHAUST DUCT TO FUME HOOD. INSTALL SASH STOP AT 18". BALANCE TO 100 FPM FACE VELOCITY AT 18" SASH HEIGHT. EXHAUST DUCT SHALL BE WELDED 304 STAINLESS STEEL FROM HOOD CONNECTION TO MEDIUM PRESSURE MAIN. APPROXIMATE EXHAUST AIRFLOW NOTED.

2 CONNECT EXHAUST DUCT TO SNORKEL WITH 4" DIA. DUCT. BALANCE TO 100 CFM. COORDINATE ACTUAL SIZE AND EXHAUST AIRFLOW RATE WITH EQUIPMENT SUPPLIER.

3 CONNECT EXHAUST DUCT TO EXHAUST COLLAR ON CANOPY EXHAUST HOOD. BALANCE TO AIRFLOW NOTED IN EXHAUST HOOD SCHEDULE.

4 EXHAUST DUCT TO DROP DOWN IN WALL CAVITY TO SERVE THE VENTILATED BASE CABINETS. SEE 2/MH103A FOR CONTINUATION.

5 EXHAUST DUCT TO DROP DOWN IN 6" WALL CAVITY TO LOW SIDEWALL EXHAUST. EXHAUST DROP IN WALL SHALL BE OF THE SIZE NOTED. MOUNT LOW SIDEWALL EXHAUST GRILL AT 1'-0" AFF.

6 PROVIDE AND INSTALL REPLACEMENT FILTERS IN THE EXHAUST AND SUPPLY GRILLES LOCATED IN THE GRINDING AREAS.

7 CONNECT TO EQUIPMENT EXHAUST CONNECTION WITH 2" DIA. BLACK IRON PIPING. PIPING SHALL BE CONNECTED TO EXHAUST SYSTEM AS SHOWN. PROVIDE AND INSTALL BUTTERFLY VALVE FOR AIRFLOW BALANCING.

8 CONNECT EXHAUST DUCT TO SNORKEL WITH 6" DIA. DUCT. BALANCE TO 200 CFM. COORDINATE EXACT SIZE AND EXHAUST AIRFLOW RATE WITH EQUIPMENT SUPPLIER.

9 CONNECT EXHAUST DUCT TO THIMBLE CONNECTION OF BIO SAFETY CABINET. BALANCE EXHAUST FLOW TO 105 FPM FACE VELOCITY AT 10" SASH HEIGHT. EXHAUST DUCT SHALL BE WELDED 316 STAINLESS STEEL FROM THIMBLE CONNECTION TO EXHAUST CONTROL VALVE. APPROXIMATE EXHAUST AIRFLOW NOTED.

10 CONNECT TO VENTED ACID STORAGE BASE CABINET WITH 2" DIAMETER SCHEDULE 80 PVC. PVC EXHAUST SHALL BE CONNECTED TO EXHAUST DUCT AS SHOWN. PROVIDE AND INSTALL BUTTERFLY VALVE FOR BALANCING AND BALANCE TO 25 CFM. SEE LABORATORY PLANS FOR INSTALLATION DETAILS.

11 WRAP EXHAUST DUCT IN SHAFT WITH TWO LAYERS OF 1 1/2" THICK FIRE RESISTIVE DUCT WRAP WITH A TWO HOUR RATING.

12 EXHAUST DUCT TO PENETRATE EXHAUST RISER AND RISE UP 22" IN RISER.

13 EXHAUST DUCT TO DROP DOWN IN WALL FROM ABOVE. RUN HORIZONTALLY CONCEALED WITHIN THE VENTILATED BASE CABINETS. RUN DUCTWORK AS HIGH POSSIBLE WITHIN BASE CABINET. SEE DETAIL 3/MH102B.

14 PROVIDE 6" DIA. STAINLESS STEEL FLEXIBLE HOSE EQUIPMENT CONNECTION. BALANCE TO 50 CFM. PROVIDE ESCUTCHEON AT CEILING PENETRATION. EXHAUST DUCT ABOVE THE CEILING SHALL BE HARD DUCTED.

15 CONNECT TO VENTED ACID STORAGE BASE CABINET WITH 2" DIAMETER SCHEDULE 80 PVC. PVC SHALL BE CONNECTED TO EXHAUST DUCT AS SHOWN. PROVIDE AND INSTALL BUTTERFLY VALVE FOR BALANCING AND BALANCE TO 25 CFM. SEE LABORATORY PLANS FOR INSTALLATION DETAILS.

16 CONNECT EXHAUST DUCT TO SNORKEL WITH 4" DIA. DUCT. BALANCE TO 300 CFM.

17 6" DIA. EXHAUST DUCT UP TO PENTHOUSE MECHANICAL ROOM. PROVIDE DUCT CLEANOUT AT BOTTOM OF VERTICAL RISER. SEE PENTHOUSE MECHANICAL PLAN FOR CONTINUATION.

18 CONNECT EXHAUST DUCT TO PURE ACID FUME HOOD. INSTALL SASH STOP AT 18". BALANCE TO 100 FPM FACE VELICITY AT 18" SASH HEIGHT. EXHAUST DUCT SHALL BE FIBERGLASS AND SHALL BE NON-FERROUS IN ITS ENTIRETY (INCLUDING SCREWS AND FASTENERS). APPROXIMATE EXHAUST NOTED. SEE SPECIFICATIONS FOR MORE INFROMATION.

19 PURE ACID FUME HOOD EXHAUST DUCT UP. SEE PENTHOUSE MECHANICAL PLAN FOR CONTINUATION.

20 PROVIDE AND INSTALL 4" DIAMETER HIGH EFFICIENCY TAKEOFF WITH MANUAL BALANCING DAMPER ORIENTED DOWN. BALANCE TO AIRFLOW NOTED.

KEY PLAN

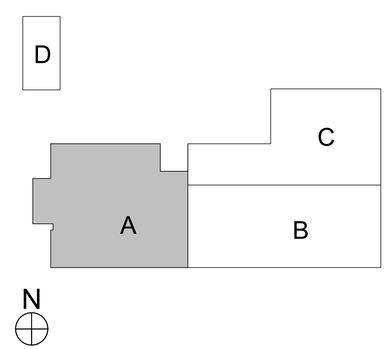

CRSA
649 E. South Temple
Salt Lake City, UT 84102
801.355.5915

MWL
11798 N. Lakeridge Pkwy.
Ashland, VA 23005
804-228-7473

State of Utah
Department of Administrative Services
Division of Facilities Construction & Management
4110 State Office Building
Salt Lake City, Utah 84114
Phone: (801) 538 - 3018
Fax: (801) 538 - 3267

DFCM APPROVAL STAMP

LICENSED PROFESSIONAL ENGINEER No. 178893 DONALD K. BRADSHAW STATE OF UTAH

ARCHITECT-ENGINEER STAMP

Unified State Laboratory Module 2

4451 South 2700 West, Taylorsville, UT 84118

DFCM #: 13020300

Project #: B13-024

DATE:	ISSUE TYPE:
April 21, 2014	BID SET
May 8, 2015	ADD # 1
May 14, 2015	ADD # 2
May 20, 2015	ADD # 3

CHECKED BY	S. Muir
DRAWN BY	DL

LEVEL 3 MECHANICAL PLAN AREA A

MH103A

VOLUME 2

D:_BIM\Local Files\13245-Unified Lab Mod II-V13-Mechanical-Central_DLineback.rvt
5/20/2015 3:26:23 PM

AIR CONTROL VALVE SCHEDULE - LEVEL 3

			SUPPLY AIR									FLUID						COIL					GENERAL EXHAUST					
AREA SERVED	ID	MANUFACTURER AND MODEL NUMBER	INLET DIA. (IN)	COOLING MAXIMUM AIRFLOW (CFM)	HEATING MAXIMUM AIRFLOW (CFM)	MINIMUM AIRFLOW (CFM)	UNOCCUPIED MINIMUM AIRFLOW (CFM)	AIRFLOW DRIVING FACTOR	ENTERING AIR TEMP. DB (DEG. F)	MINIMUM LEAVING AIR TEMP. (DEG. F)	S.P. LOSS AT MAX CFM (IN H20)	HEAT LOAD (MBH)	TOTAL FLUID FLOW (GPM)	ENTERING/ LEAVING FLUID TEMP. (DEG. F)	WORKING FLUID	FLUID PRESSURE DROP (FT)	MIN. COIL ROWS	MIN. FINS (FPI)	COIL SIZE H x W (IN)	AIR PRESSURE DROP (IN. W.G.)	PIPE SIZE (IN)	INLET DIA. (IN)	MAXIMUM AIRFLOW (CFM)	MINIMUM AIRFLOW (CFM)	UNOCCUPIED MINIMUM AIRFLOW (CFM)	S.P. LOSS AT MAX CFM (IN H20)	NOTES
AREA A																												
PEST. FORM. EXT. LAB 301A	SV-A3-1	PHOENIX MAVA214M	2x14	4055	4055	2560	425	AIR CHANGE	52	80	0.6	104.5	5.0	130/100	WATER	3.3	2	8	18x32	0.17	1	---	---	---	---	---	(1)(2)(5)(6)
	HEV-A3-1	PHOENIX EXVB112M	---	---	---	---	---	6' ADA FUME HOOD	---	---	---	---	---	---	---	---	---	---	---	---	---	12	650	100	100	0.6	(1)(2)(6)
	HEV-A3-2	PHOENIX EXVB112M	---	---	---	---	---	8' FUME HOOD	---	---	---	---	---	---	---	---	---	---	---	---	---	12	1080	135	135	0.6	(1)(2)(6)
	HEV-A3-3	PHOENIX EXVA114M	---	---	---	---	---	EXHAUST HOOD	---	---	---	---	---	---	---	---	---	---	---	---	---	14	1680	1630	215	0.6	(1)(2)
	HEV-A3-4	PHOENIX EXVA110M	---	---	---	---	---	SNORKEL	---	---	---	---	---	---	---	---	---	---	---	---	---	10	775	775	55	0.6	(1)(2)
PEST. FORM. INST. LAB 301B	SV-A3-2	PHOENIX MAVA114M	14	1530	600	600	215	LOAD	52	80	0.6	21.0	1.5	130/100	WATER	0.1	3	6	15x22	0.05	3/4	---	---	---	---	---	(1)(2)(5)
	GX-A3-1	PHOENIX EXVA112M	---	---	---	---	---	---	---	---	---	---	---	---	---	---	---	---	---	---	---	12	1130	100	100	0.6	(1)(2)
	HEV-A3-5	PHOENIX EXVA108M	---	---	---	---	---	SNORKEL	---	---	---	---	---	---	---	---	---	---	---	---	---	8	600	600	215	0.6	(1)(2)
VESTIBULE 301	SV-A3-3	PHOENIX MAVA108M	8	100	100	100	100	AIR CHANGE	52	80	0.6	2.6	0.5	130/100	WATER	0.2	3	6	9x9	0.03	3/4	---	---	---	---	---	(1)(2)(5)
	GX-A3-2	PHOENIX EXVA108M	---	---	---	---	---	---	---	---	---	---	---	---	---	---	---	---	---	---	---	8	100	100	100	0.6	(1)(2)
PEST. RESIDUE INST LAB 301C	SV-A3-4	PHOENIX MAVA114M	14	2160	1565	1565	370	LOAD	52	85	0.6	47.5	3.3	130/100	WATER	0.6	3	7	15x26	0.24	1	---	---	---	---	---	(1)(2)(5)
	GX-A3-3	PHOENIX EXVA110M	---	---	---	---	---	---	---	---	---	---	---	---	---	---	---	---	---	---	---	10	650	55	55	0.6	(1)(2)
	HEV-A3-6	PHOENIX EXVB114M	---	---	---	---	---	SNORKEL	---	---	---	---	---	---	---	---	---	---	---	---	---	14	1410	1410	215	0.6	(1)(2)
PEST. RESIDUE EXT. LAB 302	SV-A3-5	PHOENIX MAVA214M	2x14	3890	3890	2395	350	AIR CHANGE	52	80	0.6	100.2	7.4	130/100	WATER	3.8	3	6	18x38	0.38	1-1/4	---	---	---	---	---	(1)(2)(5)(6)
	HEV-A3-7	PHOENIX EXVB112M	---	---	---	---	---	6' ADA FUME HOOD	---	---	---	---	---	---	---	---	---	---	---	---	---	12	650	100	100	0.6	(1)(2)(6)
	HEV-A3-8	PHOENIX EXVB112M	---	---	---	---	---	8' FUME HOOD	---	---	---	---	---	---	---	---	---	---	---	---	---	12	1080	135	135	0.6	(1)(2)(6)
	HEV-A3-9	PHOENIX EXVA114M	---	---	---	---	---	EXHAUST HOOD	---	---	---	---	---	---	---	---	---	---	---	---	---	14	2260	2260	215	0.6	(1)(2)
VOLATILE EXTRACT 303A	SV-A3-6	PHOENIX MAVA108M	8	550	550	40	40	AIR CHANGE	52	97	0.6	22.8	2.0	130/100	WATER	2.7	3	8	12x14	0.2	3/4	---	---	---	---	---	(1)(2)(5)(6)
	HEV-A3-10	PHOENIX EXVB110M	---	---	---	---	---	6' ADA FUME HOOD	---	---	---	---	---	---	---	---	---	---	---	---	---	10	650	140	140	0.6	(1)(2)(6)
VOLATILE INSTRUMENT LAB 303	SV-A3-7	PHOENIX MAVA108M	8	425	240	240	80	LOAD	52	80	0.6	6.2	0.75	130/100	WATER	0.4	3	6	9x10	0.1	3/4	---	---	---	---	---	(1)(2)(5)
	GX-A3-4	PHOENIX EXVA108M	---	---	---	---	---	---	---	---	---	---	---	---	---	---	---	---	---	---	---	8	225	40	40	0.6	(1)(2)
	HEV-A3-23	PHOENIX EXVA108M	---	---	---	---	---	SNORKEL	---	---	---	---	---	---	---	---	---	---	---	---	---	8	200	200	40	0.6	(1)(2)
CHEM OFFICE 304	SV-A3-8	PHOENIX TSVA110M	10	820	470	270	55	LOAD	52	95	0.6	18.6	1.8	130/100	WATER	2.3	3	7	12x14	0.13	3/4	---	---	---	---	---	(1)(2)(5)
	GX-A3-5	PHOENIX TEVA110M	---	---	---	---	---	---	---	---	---	---	---	---	---	---	---	---	---	---	---	10	870	320	105	0.6	(1)(2)
MANAGER 304A	SV-A3-9	PHOENIX TSVA108M	8	215	215	80	40	LOAD	52	95	0.6	8.5	0.9	130/100	WATER	0.5	3	6	9x12	0.06	3/4	---	---	---	---	---	(1)(2)(5)
	GX-A3-6	PHOENIX TEVA108M	---	---	---	---	---	---	---	---	---	---	---	---	---	---	---	---	---	---	---	8	215	80	40	0.6	(1)(2)
ELECTRICAL 300L	SV-A3-10	PHOENIX TSVA108M	8	200	(4)	0	0	LOAD	52	---	0.6	---	---	---	---	---	---	---	---	---	---	---	---	---	---	---	(1)(2)(4)
	GX-A3-7	PHOENIX TEVA108M	---	---	---	---	---	---	---	---	---	---	---	---	---	---	---	---	---	---	---	8	200	0	0	0.6	(1)(2)
BREAK ROOM 316	SV-A3-11	PHOENIX TSVA114M	14	1530	860	500	215	LOAD	52	95	0.6	34.0	2.75	130/100	WATER	7.4	3	7	15x20	0.14	3/4	---	---	---	---	---	(1)(2)(5)
	GX-A3-8	PHOENIX TEVA114M	---	---	---	---	---	---	---	---	---	---	---	---	---	---	---	---	---	---	---	14	1530	500	215	0.6	(1)(2)
GRIND 1 - 315C	SV-A3-12	PHOENIX MAVA108M	8	240	240	240	40	AIR CHANGE	52	80	0.6	6.2	0.6	130/100	WATER	0.2	3	6	9x12	0.06	3/4	---	---	---	---	---	(1)(2)(5)
	GX-A3-9	PHOENIX EXVA108M	---	---	---	---	---	---	---	---	---	---	---	---	---	---	---	---	---	---	---	8	340	40	140	0.6	(1)(2)
GRIND 2 - 315A	SV-A3-13	PHOENIX MAVA114M	14	1680	620	590	315	LOAD	52	95	0.6	24.5	2.0	130/100	WATER	0.2	3	7	15x22	0.07	3/4	---	---	---	---	---	(1)(2)(5)
	GX-A3-10	PHOENIX EXVA114M	---	---	---	---	---	---	---	---	---	---	---	---	---	---	---	---	---	---	---	14	1580	490	215	0.6	(1)(2)
FURNACE 315D	SV-A3-14	PHOENIX MAVA114M	14	2220	2220	215	215	LOAD	52	80	0.6	57.2	4.5	130/100	WATER	1.04	3	6	15x26	0.38	1	---	---	---	---	---	(1)(2)(5)
	HEV-A3-11	PHOENIX EXVA114M	---	---	---	---	---	EXHAUST HOOD	---	---	---	---	---	---	---	---	---	---	---	---	---	14	2325	315	315	0.6	(1)(2)
ICPMS 314A	SV-A3-15	PHOENIX MAVA114M	14	2280	615	615	215	LOAD	52	80	0.6	15.8	1.6	130/100	WATER	2.1	2	8	15x26	0.04	3/4	---	---	---	---	---	(1)(2)(5)
	GX-A3-11	PHOENIX EXVA114M	---	---	---	---	---	---	---	---	---	---	---	---	---	---	---	---	---	---	---	14	1880	215	215	0.6	(1)(2)
	HEV-A3-12	PHOENIX EXVA108M	---	---	---	---	---	SNORKEL	---	---	---	---	---	---	---	---	---	---	---	---	---	8	500	500	100	0.6	(1)(2)
WET CHEM 314	SV-A3-16	PHOENIX MAVA214M	2x14	4200	4200	1465	1465	AIR CHANGE	52	80	0.6	108.2	8.2	130/100	WATER	4.75	3	6	18x40	0.39	1-1/4	---	---	---	---	---	(1)(2)(5)(6)
	GX-A3-12	PHOENIX EXVA212M	---	---	---	---	---	---	---	---	---	---	---	---	---	---	---	---	---	---	---	2x12	2575	215	215	0.6	(1)(2)(6)
	HEV-A3-13	PHOENIX EXVB108M	---	---	---	---	---	4' FUME HOOD	---	---	---	---	---	---	---	---	---	---	---	---	---	8	485	60	160	0.6	(1)(2)(6)
	HEV-A3-14	PHOENIX EXVB108M	---	---	---	---	---	4' FUME HOOD	---	---	---	---	---	---	---	---	---	---	---	---	---	8	485	60	160	0.6	(1)(2)(6)
	HEV-A3-15	PHOENIX EXVB108M	---	---	---	---	---	4' FUME HOOD	---	---	---	---	---	---	---	---	---	---	---	---	---	8	485	60	160	0.6	(1)(2)(6)
	HEV-A3-17	PHOENIX EXVB112M	---	---	---	---	---	6' FUME HOOD	---	---	---	---	---	---	---	---	---	---	---	---	---	12	785	100	250	0.6	(1)(2)(6)
	HEV-A3-18	PHOENIX EXVB108M	---	---	---	---	---	4' ADA FUME HOOD	---	---	---	---	---	---	---	---	---	---	---	---	---	8	400	60	160	0.6	(1)(2)(6)
	HEV-A3-19	PHOENIX EXVB108M	---	---	---	---	---	4' FUME HOOD	---	---	---	---	---	---	---	---	---	---	---	---	---	8	485	60	160	0.6	(1)(2)(6)
HALL 300B	SV-A3-17	PHOENIX TSVA114M	14	2440	2440	2440	1200	AIR CHANGE	52	95	0.6	96.5	11.0	130/100	WATER	6.5	3	8	18x30	0.34	1-1/4	---	---	---	---	---	(1)(2)(5)
	GX-A3-13	PHOENIX TEVA114M	---	---	---	---	---	---	---	---	---	---	---	---	---	---	---	---	---	---	---	10	920	920	55	0.6	(1)(2)
MEAT LAB 313	SV-A3-18	PHOENIX MAVA114M	14	2220	2220	1190	315	AIR CHANGE	52	80	0.6	57.2	4.0	130/100	WATER	0.9	3	6	15x28	0.33	1	---	---	---	---	---	(1)(2)(5)(6)
	GX-A3-14	PHOENIX EXVA110M	---	---	---	---	---	---	---	---	---	---	---	---	---	---	---	---	---	---	---	10	855	55	55	0.6	(1)(2)(6)
	HEV-A3-20	PHOENIX EXVB112M	---	---	---	---	---	EXHAUST HOOD	---	---	---	---	---	---	---	---	---	---	---	---	---	12	1025	100	100	0.6	(1)(2)
	HEV-A3-21	PHOENIX EXVB110M	---	---	---	---	---	5' ADA FUME HOOD	---	---	---	---	---	---	---	---	---	---	---	---	---	10	540	80	80	0.6	(1)(2)(6)
	HEV-A3-22	PHOENIX EXVB110M	---	---	---	---	---	5' FUME HOOD	---	---	---	---	---	---	---	---	---	---	---	---	---	10	660	80	80	0.6	(1)(2)(6)
AREA B																												
I.T. 300D	SV-B3-1	PHOENIX TSVA110M	10	860	(4)	55	55	LOAD	52	---	0.6	---	---	---	---	---	---	---	---	---	---	---	---	---	---	---	(1)(2)(4)
	GX-B3-1	PHOENIX TEVA110M	---	---	---	---	---	---	---	---	---	---	---	---	---	---	---	---	---	---	---	10	860	55	55	0.6	(1)(2)
CONFERENCE 306	SV-B3-2	PHOENIX TSVA112M	12	1410	1010	425	100	LOAD	52	95	0.6	40.0	3.0	130/100	WATER	7.7	3	8	15x20	0.21	1	---	---	---	---	---	(1)(2)(5)
	GX-B3-2	PHOENIX TEVA112M	---	---	---	---	---	---	---	---	---	---	---	---	---	---	---	---	---	---	---	10	880	275	55	0.6	(1)(2)
ELECTRICAL 300F	SV-B3-3	PHOENIX TSVA108M	8	200	(4)	40	40	LOAD	52	---	0.6	---	---	---	---	---	---	---	---	---	---	---	---	---	---	---	(1)(2)(4)
	GX-B3-3	PHOENIX TEVA108M	---	---	---	---	---	---	---	---	---	---	---	---	---	---	---	---	---	---	---	8	200	40	40	0.6	(1)(2)
BACT OFFICE 309	SV-B3-4	PHOENIX TSVA108M	8	490	225	160	40	LOAD	52	95	0.6	8.9	0.75	130/100	WATER	0.4	3	8	9x12	0.9	3/4	---	---	---	---	---	(1)(2)(5)
	GX-B3-4	PHOENIX TEVA108M	---	---	---	---	---	---	---	---	---	---	---	---	---	---	---	---	---	---	---	8	490	160	40	0.6	(1)(2)
MANAGER 309A	SV-B3-5	PHOENIX TSVA108M	8	270	270	85	40	LOAD	52	95	0.6	10.7	0.8	130/100	WATER	0.38	3	8	9x12	0.89	3/4	---	---	---	---	---	(1)(2)(5)
	GX-B3-5	PHOENIX TEVA108M	---	---	---	---	---	---	---	---	---	---	---	---	---	---	---	---	---	---	---	8	270	85	40	0.6	(1)(2)
CONFERENCE RM 310B	SV-B3-6	PHOENIX TSVA108M	8	580	535	175	40	LOAD	52	95	0.6	21.2	2.0	130/100	WATER	2.5	3	8	12x12	0.25	3/4	---	---	---	---	---	(1)(2)(5)
	GX-B3-6	PHOENIX TEVA108M	---	---	---	---	---	---	---	---	---	---	---	---	---	---	---	---	---	---	---	8	580	175	40	0.6	(1)(2)
AG & FOOD ADMIN & SUPPORT 310	SV-B3-7	PHOENIX TSVA112M	12	1200	385	360	100	LOAD	52	95	0.6	15.2	1.1	130/100	WATER	1.3	3	6	15x16	0.04	3/4	---	---	---	---	---	(1)(2)(5)
	GX-B3-7	PHOENIX TEVA112M	---	---	---	---	---	---	---	---	---	---	---	---	---	---	---	---	---	---	---	12	1200	360	100	0.6	(1)(2)
LAB DIRECTOR 310D	SV-B3-8	PHOENIX TSVA110M	10	955	955	350	55	LOAD	52	95	0.6	37.8	2.8	130/100	WATER	7	3	8	15x18	0.23	3/4	---	---	---	---	---	(1)(2)(5)
	GX-B3-8	PHOENIX TEVA110M	---	---	---	---	---	---	---	---	---	---	---	---	---	---	---	---	---	---	---	10	955	350	55	0.6	(1)(2)
PATH 313A	SV-B3-9	PHOENIX MAVA114M	14	2430	1950	1950	515	LOAD	52	80	0.6	50.2	3.8	130/100	WATER	0.8	3	6	15x28	0.26	1	---	---	---	---	---	(1)(2)(5)
	GX-B3-9	PHOENIX EXVA112M	---	---	---	---	---	---	---	---	---	---	---	---	---	---	---	---	---	---	---	12	520	40	40	0.6	(1)(2)
	HEV-B3-1	PHOENIX CEVA108M	---	---	---	---	---	4' BSC	---	---	---	---	---	---	---	---	---	---	---	---	---	8	460	460	460	0.6	(1)(2)
	HEV-B3-2	PHOENIX EXVA114M	---	---	---	---	---	EXHAUST HOOD	---	---	---	---	---	---	---	---	---	---	---	---	---	14	1650	1650	215	0.6	(1)(2)
MEDIA PREP 312	SV-B3-10	PHOENIX MAVA314M	3x14	7200	2160	1560	1560	LOAD	52	90	0.6	75.5	4.3	130/100	WATER	4.6	2	8	21x56	0.03	1	---	---	---	---	---	(1)(2)(5)
	GX-B3-10	PHOENIX EXVA314M	---	---	---	---	---	---	---	---	---	---	---	---	---	---	---	---	---	---	---	3x14	6280	640	450	0.6	(1)(2)
	HEV-B3-3	PHOENIX CEVA108M	---	---	---	---	---	4' BSC	---	---	---	---	---	---	---	---	---	---	---	---	---	8	460	460	460	0.6	(1)(2)
	HEV-B3-6	PHOENIX CEVA108M	---	---	---	---	---	4' BSC	---	---	---	---	---	---	---	---	---	---	---	---	---	8	460	460	460	0.6	(1)(2)

CRSA
649 E. South Temple
Salt Lake City, UT 84102
801.355.5915

MWL
11798 N. Lakeridge Pkwy.
Ashland, VA 23005
804-228-7473

State of Utah
Department of Administrative Services
Division of Facilities Construction & Management
4110 State Office Building
Salt Lake City, Utah 84114
Phone: (801) 538 - 3018
Fax: (801) 538 - 3267

DFCM APPROVAL STAMP

LICENSED PROFESSIONAL ENGINEER No. 178893 DONALD K. BRADSHAW STATE OF UTAH

ARCHITECT-ENGINEER STAMP

Unified State Laboratory Module 2

4451 South 2700 West, Taylorsville, UT 84118

DFCM #: 13020300

Project #: B13-024

DATE:	ISSUE TYPE:
April 21, 2014	BID SET
May 8, 2015	ADD # 1
May 14, 2015	ADD # 2
May 20, 2015	ADD # 3

CHECKED BY: D. Bradshaw
DRAWN BY: DL

MECHANICAL SCHEDULES

ME605

VOLUME 2

D:_BIM\Local Files\13245-Unified Lab Mod II-V13-Mechanical-Central_DLineback.rvt
5/20/2015 9:53:26 AM

KEYED NOTES

1. EXTEND PIPING THRU WALL CAVITY TO PLUMBING FIXTURE.
2. COMBINED MANUAL-WET STANDPIPE WITH 2 1/2" X 1 1/2" REDUCING CAPS.
3. FLOOR CONTROL VALVE ASSEMBLY SEE FIRE PROTECTION DETAILS.
4. WET FIRE SUPPRESSION PIPE TO CONTINUE TO SERVE FIRE SPRINKLER SYSTEM.
5. AREA TO HAVE FLAT PLATE CONCEALED SPRINKLERS.
6. AREA TO BE PROTECTED BY DRY PENDANT SPRINKLERS, LOCATE BRANCH-LINE IN HEATED SPACE.
7. CALIBRATED CIRCUIT SETTER BALANCING VALVE. BALANCE TO FLOW INDICATED.
8. VALVE AND CAP PIPING FOR FUTURE.

KEY PLAN

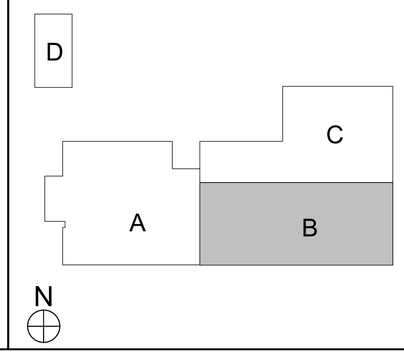

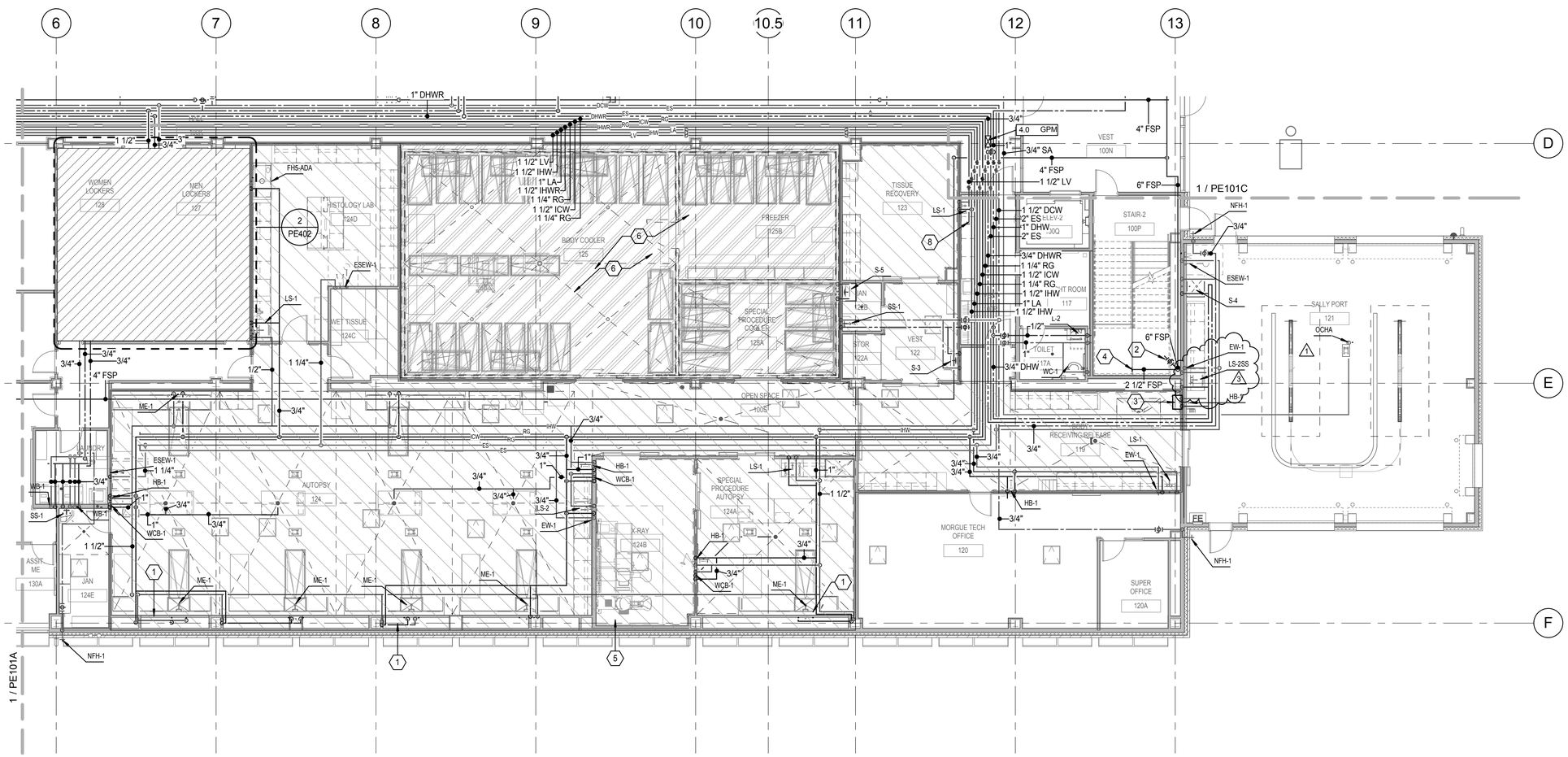

LEVEL 1 PLUMBING PLAN AREA B

1/8" = 1'-0" (1 / PE101B)

N

CRSA
649 E. South Temple
Salt Lake City, UT 84102
801.355.5915

MWL
11798 N. Lakeridge Pkwy.
Ashland, VA 23005
804-228-7473

State of Utah
Department of Administrative Services
Division of Facilities Construction & Management
4110 State Office Building
Salt Lake City, Utah 84114
Phone: (801) 538 - 3018
Fax: (801) 538 - 3267

DFCM APPROVAL STAMP

LICENSED PROFESSIONAL ENGINEER No. 178893 DONALD K. BRADSHAW STATE OF UTAH

ARCHITECT-ENGINEER STAMP

Unified State Laboratory Module 2

4451 South 2700 West, Taylorsville, UT 84118

DFCM #: 13020300

Project #: B13-024

DATE:	ISSUE TYPE:
April 21, 2014	BID SET
May 8, 2015	ADD # 1
May 14, 2015	ADD # 2
May 20, 2015	ADD # 3

CHECKED BY: J. Maeser

DRAWN BY: DL

LEVEL 1 PLUMBING PLAN AREA B

PE101B

VOLUME 2

D:_BIM\Local Files\13245-Unified Lab Mod III\13-Mechanical-Central_DL-nebeck.rvt
5/20/2015 11:34:41 AM

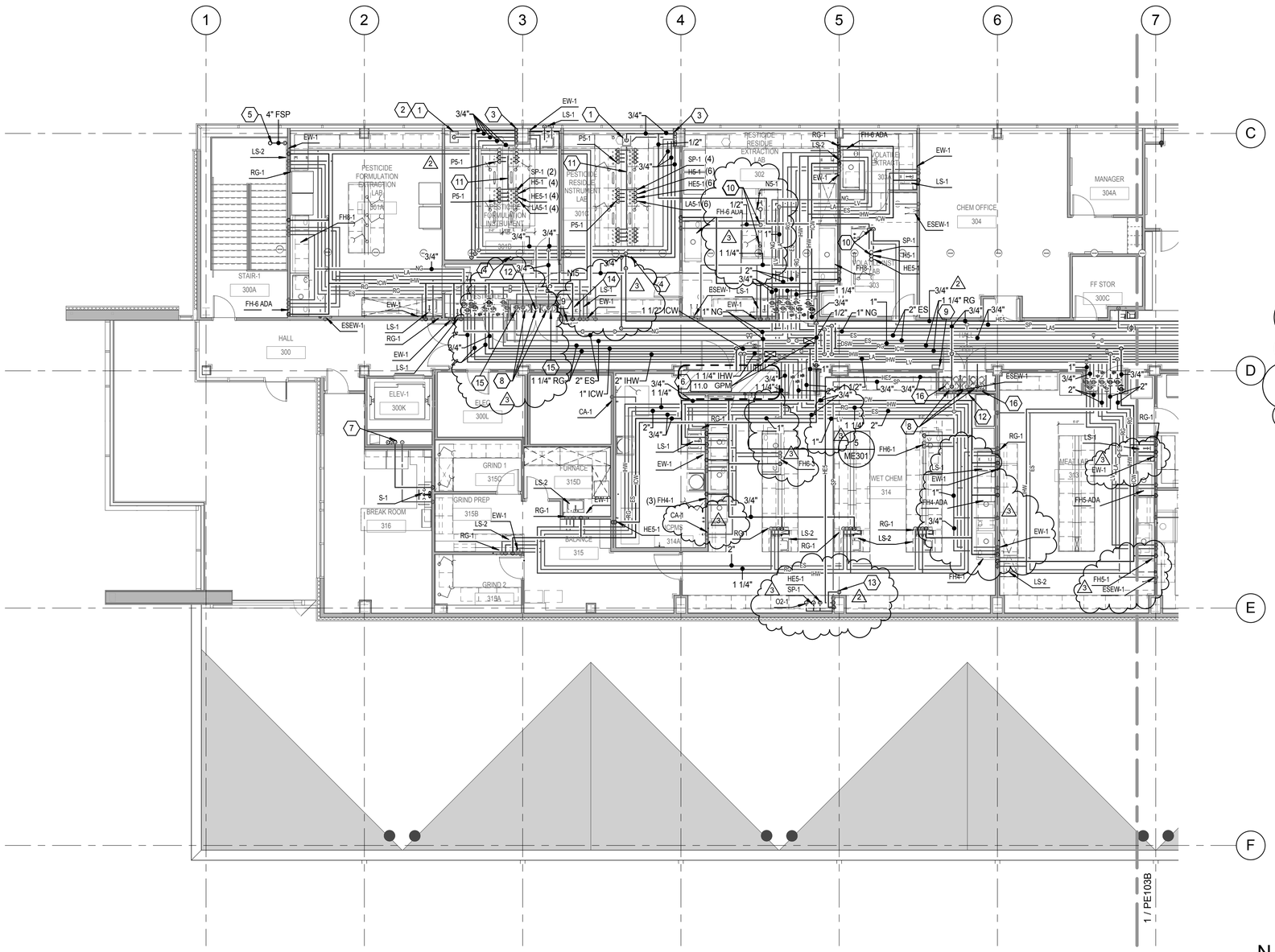

LEVEL 3 PLUMBING PLAN AREA A (1 / PE103A)

1/8" = 1'-0"

N

KEYED NOTES

1. HYDROGEN GENERATOR. FURNISHED BY OTHERS. COORDINATE WITH LAB PLANS.
2. HYDROGEN GENERATOR SHOWN AT THIS LOCATION FOR CLARITY. COORDINATE EXACT LOCATION WITH LAB PLANS.
3. DROP PIPING THRU WALL, EXTEND THRU CABINETRY TO WORK BENCH RACEWAY AND OUT TO BENCH TOP OUTLETS.
4. SWEDGELOK ELECTRO-POLISHED STAINLESS STEEL TUBING.
5. FSP TO RISE TO HOSE VALVE ON ROOF, INCLUDE SHUTOFF VALVE IN HEATED SPACE ACCESSIBLE FROM ROOF. LOCATE ALL VALVES AN OUTLETS A MINIMUM OF 10-FEET AWAY FROM EDGE OF ROOF.
6. CALIBRATED CIRCUIT SETTER BALANCING VALVE AT THE END OF IHW AND ES CIRCULATION LOOP. BALANCE TO FLOW INDICATED.
7. 1-1/4" DHW LOOP AND 3/4" DCW ON.
8. PROVIDE PRESSURE REGULATOR AND CHANGE OVER MANIFOLD AT GAS TANKS. WIRE MANIFOLD TO REMOTE ENUNCIATOR. COORDINATE ENUNCIATOR LOCATION WITH LAB PLANS. (3)
9. REMOTE ENUNCIATOR FOR CHANGE OVER MANIFOLDS.
10. DROP PIPING THRU UMBILICAL AND EXTEND THRU CABINETRY RACEWAY TO COUNTER OUTLETS.
11. EACH PIPE IN RACEWAY TO BE 1/2".
12. SINGLE TANK MANIFOLD.
13. EXTEND 1/2" OXYGEN PIPING FROM WALL MOUNTED CYLINDER ABOVE CEILING, DROP THRU COLUMN WRAP AND CABINETRY TO BENCH TOP OUTLET. (3)
14. STUB OUT OF WALL WITH 1/2" PIPING. PROVIDE SHUT-OFF VALVE FOR CONNECTION TO POLISHER. COORDINATE LOCATION WITH LAB PLANS.
15. ONE BY ONE TANK MANIFOLD.
16. TWO BY TWO TANK MANIFOLD.

KEY PLAN

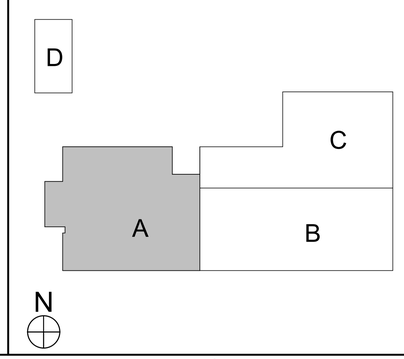

CRSA
649 E. South Temple
Salt Lake City, UT 84102
801.355.5915

MWL
11798 N. Lakeridge Pkwy.
Ashland, VA 23005
804-228-7473

State of Utah
Department of Administrative Services
Division of Facilities Construction & Management
DFCM
4110 State Office Building
Salt Lake City, Utah 84114
Phone: (801) 538 - 3018
Fax: (801) 538 - 3267

DFCM APPROVAL STAMP

LICENSED PROFESSIONAL ENGINEER No. 178893 DONALD K. BRADSHAW STATE OF UTAH

ARCHITECT-ENGINEER STAMP

Unified State Laboratory Module 2

4451 South 2700 West, Taylorsville, UT 84118

DFCM #: 13020300

Project #: B13-024

DATE:	ISSUE TYPE:
April 21, 2014	BID SET
May 8, 2015	ADD # 1
May 14, 2015	ADD # 2
May 20, 2015	ADD # 3

CHECKED BY: J. Maeser

DRAWN BY: DL

LEVEL 3 PLUMBING PLAN AREA A

PE103A

VOLUME 2

D:_BIM\Local Files\13245-Unified Lab Mod III\13-Mechanical\Central_DL.rvt
5/20/2015 3:09:21 PM

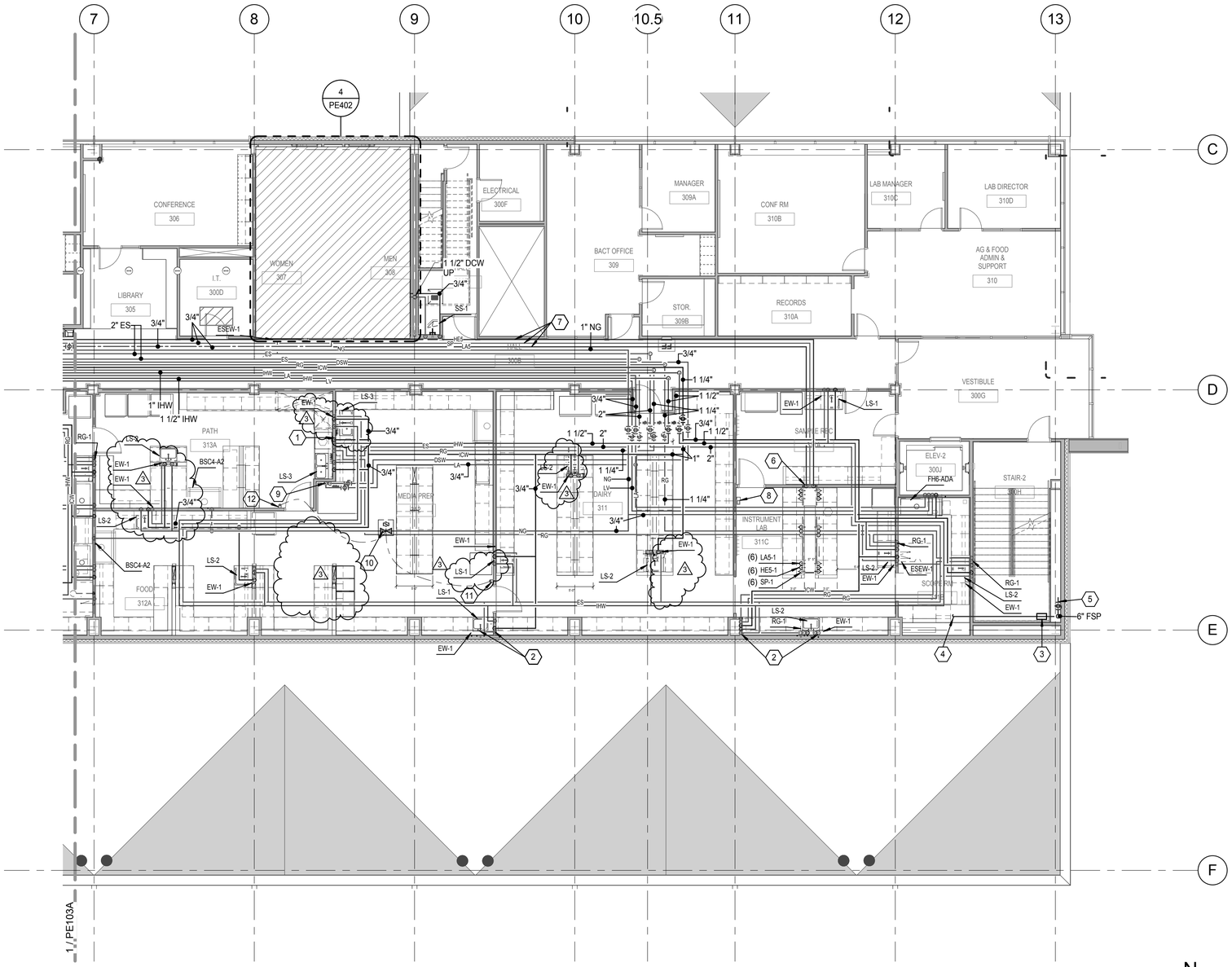

LEVEL 3 PLUMBING PLAN AREA B

1/8" = 1'-0" (1 / PE103B)

N

KEYED NOTES

1. 3/4" RG, 3/4" IHW AND 3/4" ICW DOWN THRU WALL. SERVE BACK TO BACK GLASS WASHERS FROM SAME DROPS. PROVIDE ESCUTCHEON, VALVE AND HOSE THREAD OUTLET ON BOTH SIDES OF THE WALL FOR FINAL CONNECTION TO GLASS WASHERS.
2. DROP PIPING THRU WALL AND EXTEND THRU CABINETRY TO PLUMBING FIXTURE.
3. FLOOR CONTROL VALVE ASSEMBLY SEE FIRE PROTECTION DETAILS.
4. WET FIRE SUPPRESSION PIPE TO CONTINUE TO SERVE FIRE SPRINKLER SYSTEM.
5. COMBINED MANUAL-WET STANDPIPE WITH 2 1/2" X 1 1/2" REDUCING CAPS.
6. DROP PIPING THRU WALL, EXTEND THRU CABINETRY TO WORK BENCH RACEWAY AND OUT TO BENCH TOP OUTLETS.
7. SWEDGELOK ELECTRO-POLISHED STAINLESS STEEL TUBING.
8. REMOTE ENUNCIATOR FOR CHANGE-OVER MANIFOLDS.
9. DROP DSW AND LA TO CONNECT TO AUTOCLAVE. FIELD VERIFY CONNECTION POINT AND COORDINATE PIPING ACCORDINGLY.
10. SOLENOID VALVE BOX: ISIMET S-SERIES ENCLOSURE 2-4211-K12U ASSEMBLY WITH SINGLE GAS VALVE. IDENTIFY ENCLOSURE AS "NATURAL GAS VALVE BOX".
11. LAB UTILITY CONTROL PANEL WITH NATURAL GAS EMERGENCY SHUT OFF SWITCH: ISIMET FLA-2235 UTILITY CONTROLLER FOR CONTROL OF NATURAL GAS VALVE BOX, 120V WITH 24V OUTPUTS SWITCH TO BE LABELED "GAS".
12. NATURAL GAS EMERGENCY SHUT OFF: ISIMET IPO REMOTE PUSH BUTTON.

KEY PLAN

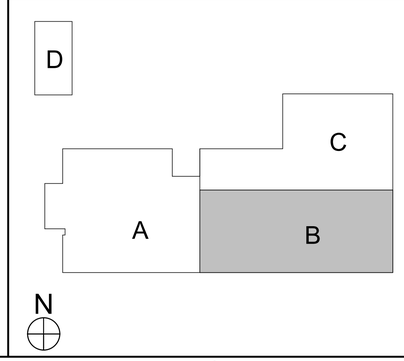

CRSA
649 E. South Temple
Salt Lake City, UT 84102
801.355.5915

MWL
11798 N. Lakeridge Pkwy.
Ashland, VA 23005
804-228-7473

State of Utah
Department of Administrative Services
Division of Facilities Construction & Management
4110 State Office Building
Salt Lake City, Utah 84114
Phone: (801) 538 - 3018
Fax: (801) 538 - 3267

DFCM APPROVAL STAMP

LICENSED PROFESSIONAL ENGINEER No. 178893 DONALD K. BRADSHAW STATE OF UTAH

ARCHITECT-ENGINEER STAMP

Unified State Laboratory Module 2

4451 South 2700 West, Taylorsville, UT 84118

DFCM #:	13020300
Project #:	B13-024

DATE:	ISSUE TYPE:
April 21, 2014	BID SET
1 May 8, 2015	ADD # 1
2 May 14, 2015	ADD # 2
3 May 20, 2015	ADD # 3

CHECKED BY	J. Maeser
DRAWN BY	DL

LEVEL 3 PLUMBING PLAN AREA B

PE103B

VOLUME 2

D:_BIM\Local Files\13245-Unified Lab Mod II-V13-Mechanical-Central_DL-neback.rvt
5/20/2015 11:34:49 AM

KEYED NOTES

1. WASTE LINE FROM GARAGE. SEE SHEET PW101C.
2. LEAVING INVERT ELEVATION: 33" BELOW FINISHED FLOOR.
3. 400 GAL. SAND/OIL INTERCEPTOR BY AMCOR. DURACRETE OR APPROVED EQUIVALENT. PROVIDE WITH SAMPLING MANHOLE.
4. PUMPED WASTE LINE FROM TUNNEL SUMP PUMP. TAKE TO JANITORS SINK.
5. PROVIDE RAYCHEM 8XL-TRACE 8W/FT, 120V HEAT CABLE IN CANOPY DRAINS.
6. CONNECT EYEWASH ON SAFETY STATION TO ACID WASTE SYSTEM.

KEY PLAN

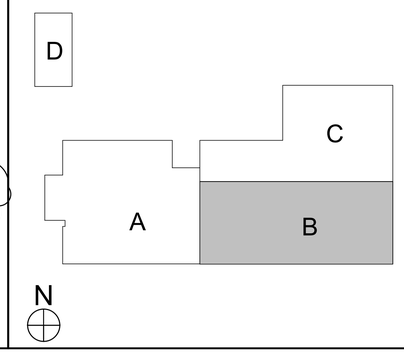

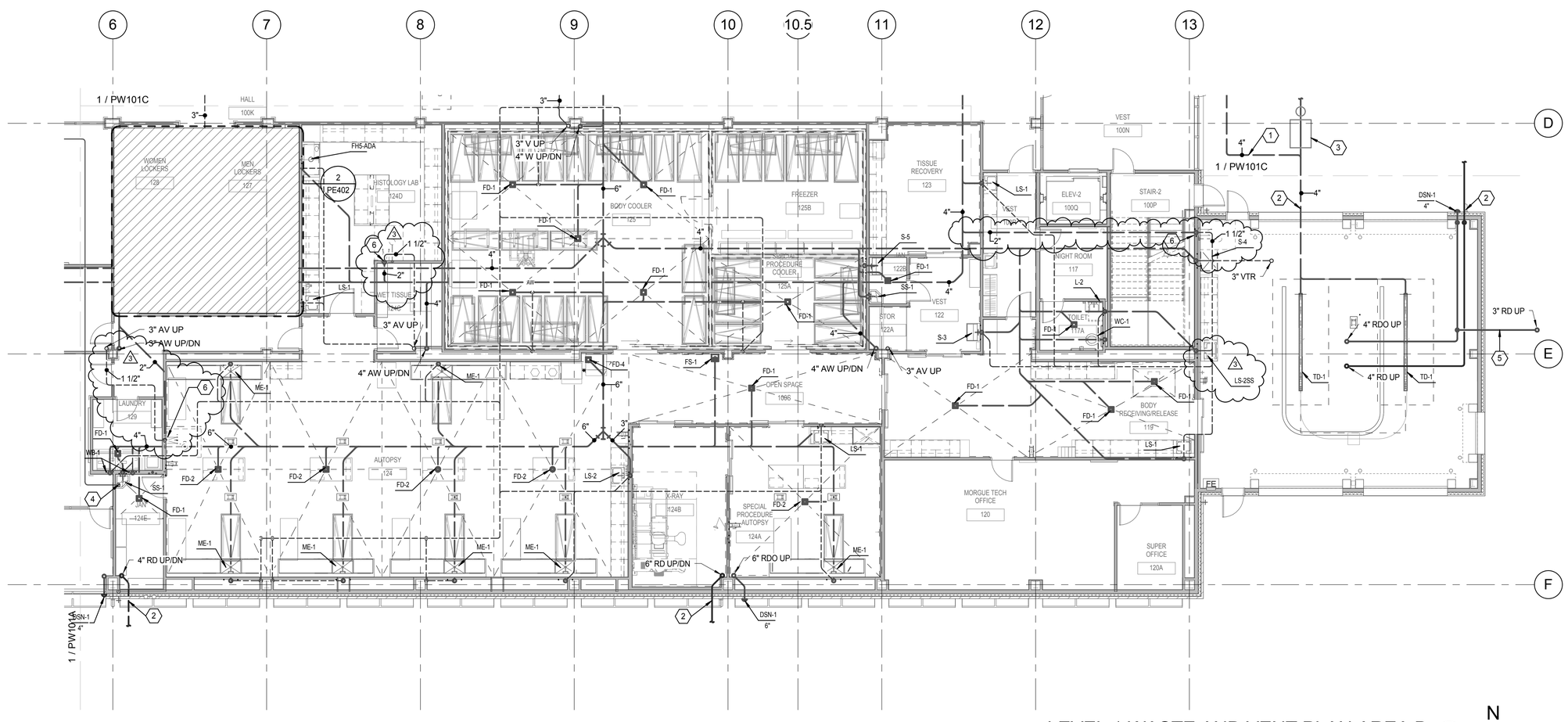

LEVEL 1 WASTE AND VENT PLAN AREA B

1 / PW101B
1/8" = 1'-0"

N

CRSA
649 E. South Temple
Salt Lake City, UT 84102
801.355.5915

MWL
11798 N. Lakeridge Pkwy.
Ashland, VA 23005
804-228-7473

State of Utah
Department of Administrative Services
Division of Facilities Construction & Management
4110 State Office Building
Salt Lake City, Utah 84114
Phone: (801) 538 - 3018
Fax: (801) 538 - 3267

DFCM APPROVAL STAMP

LICENSED PROFESSIONAL ENGINEER
No. 178893
DONALD K. BRADSHAW
STATE OF UTAH

ARCHITECT-ENGINEER STAMP

Unified State Laboratory Module 2

4451 South 2700 West, Taylorsville, UT 84118

DFCM #: 13020300

Project #: B13-024

DATE:	ISSUE TYPE:
April 21, 2014	BID SET
May 8, 2015	ADD # 1
May 14, 2015	ADD # 2
May 20, 2015	ADD # 3

CHECKED BY	Checker
DRAWN BY	DL

LEVEL 1 WASTE AND VENT PLAN AREA B

PW101B

VOLUME 2

D:_BIM\Local Files\13245-Unified Lab Mod I-V\13-Mechanical-Central_DL\neback.rvt
5/20/2015 11:34:53 AM

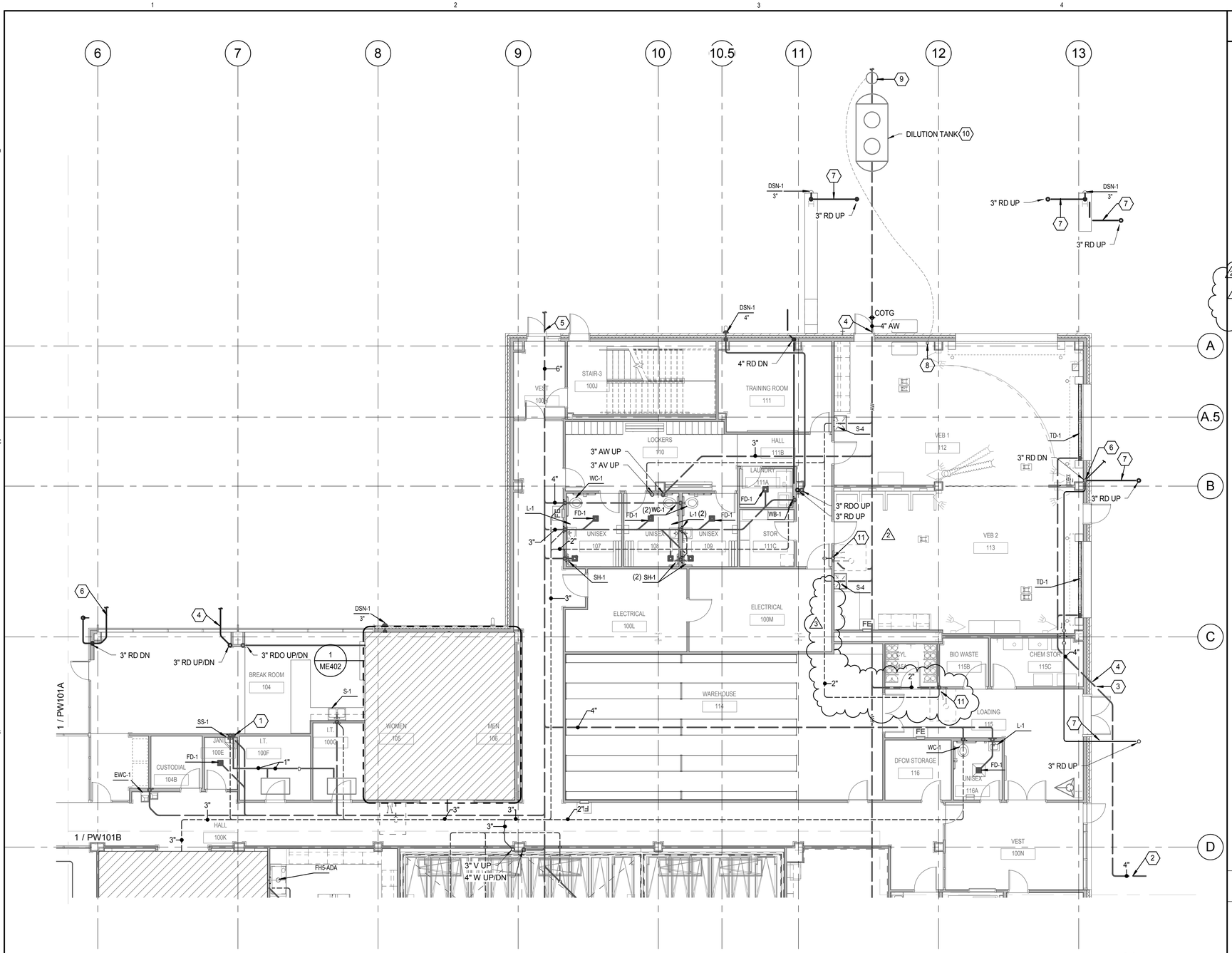

LEVEL 1 WASTE AND VENT PLAN AREA C

1/8" = 1'-0" (1 / PW101C)

N

KEYED NOTES

1. EXTEND CONDENSATE DRAIN LINE AND SLOPE TO JANITOR SINK.
2. WASTE LINE FROM GARAGE. SEE SHEET PW101C.
3. WASTE LINE TO SAND/OIL INTERCEPTOR. SEE SHEET PW101B FOR CONTINUATION.
4. LEAVING INVERT ELEVATION: 46" BELOW FINISHED FLOOR.
5. LEAVING INVERT ELEVATION: 54" BELOW FINISHED FLOOR.
6. LEAVING INVERT ELEVATION: 33" BELOW FINISHED FLOOR.
7. PROVIDE RAYCHEM 8XL-TRACE 8W/FT, 120V HEAT CABLE IN CANOPY DRAINS.
8. IPEX NEUTRASYSTEM 2 PH MONITERING SYSTEM WITH PROBE, ALARM AND CHART. INSTALL PROBE IN SAMPLING MANHOLE. TIE MONITOR INTO BMS. 120 VAC.
9. SAMPLING MANHOLE WITH PH PROBE.
10. CONTAINMENT SOLUTIONS DWT-6 6 FT. DIA. 3000 GAL TANK. TANK TO HAVE VINYL ESTER LINER.
11. CONNECT EYEWASH ON SAFETY STATION TO ACID WASTE SYSTEM.

KEY PLAN

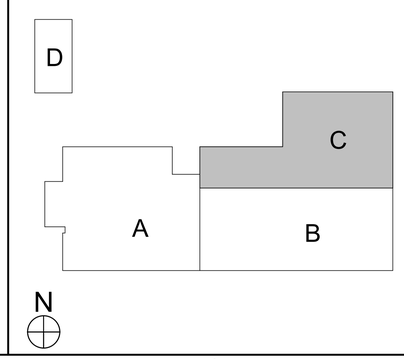

CRSA
649 E. South Temple
Salt Lake City, UT 84102
801.355.5915

MWL
11798 N. Lakeridge Pkwy.
Ashland, VA 23005
804-228-7473

State of Utah
Department of Administrative Services
Division of Facilities Construction & Management
4110 State Office Building
Salt Lake City, Utah 84114
Phone: (801) 538 - 3018
Fax: (801) 538 - 3267

DFCM APPROVAL STAMP

LICENSED PROFESSIONAL ENGINEER No. 178893 DONALD K. BRADSHAW STATE OF UTAH

ARCHITECT-ENGINEER STAMP

Unified State Laboratory Module 2

4451 South 2700 West, Taylorsville, UT 84118

DFCM #: 13020300

Project #: B13-024

DATE:	ISSUE TYPE:
April 21, 2014	BID SET
May 8, 2015	ADD # 1
May 14, 2015	ADD # 2
May 20, 2015	ADD # 3

CHECKED BY	Checker
DRAWN BY	DL

LEVEL 1 WASTE AND VENT PLAN AREA C

PW101C

VOLUME 2

D:_BIM\Local Files\13245-Unified Lab Mod II-V13-Mechanical-Central_DLineback.rvt
5/20/2015 3:34:20 PM

KEYED NOTES

1. CONDENSATE DRAIN FROM IT FAN COIL UNIT.
2. CONNECT EYEWASH ON SAFETY STATION TO ACID WASTE SYSTEM.

KEY PLAN

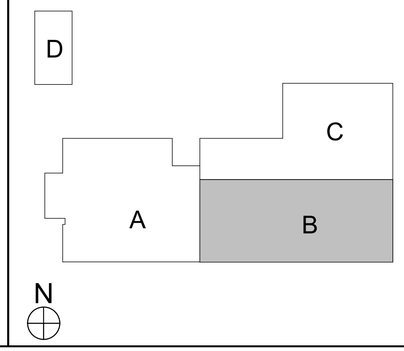

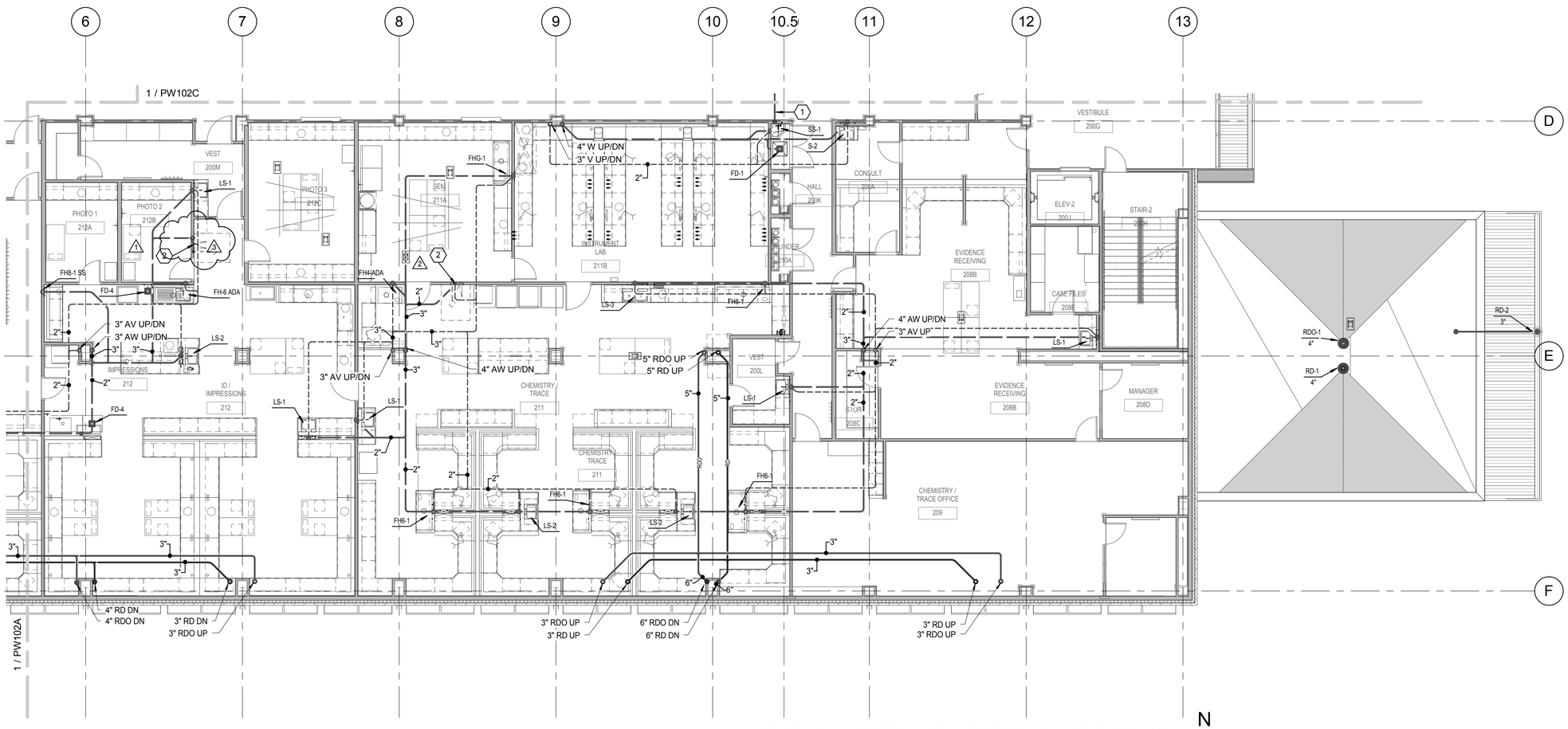

LEVEL 2 WASTE AND VENT PLAN AREA B (1 / PW102B)

1/8" = 1'-0"

CRSA
649 E. South Temple
Salt Lake City, UT 84102
801.355.5915

MWL
11798 N. Lakeridge Pkwy.
Ashland, VA 23005
804-228-7473

State of Utah
Department of Administrative Services
Division of Facilities Construction & Management
4110 State Office Building
Salt Lake City, Utah 84114
Phone: (801) 538 - 3018
Fax: (801) 538 - 3267

DFCM APPROVAL STAMP

LICENSED PROFESSIONAL ENGINEER No. 178893 DONALD K. BRADSHAW STATE OF UTAH

ARCHITECT-ENGINEER STAMP

Unified State Laboratory Module 2

4451 South 2700 West, Taylorsville, UT 84118

DFCM #: 13020300

Project #: B13-024

DATE:	ISSUE TYPE:
April 21, 2014	BID SET
May 8, 2015	ADD # 1
May 14, 2015	ADD # 2
May 20, 2015	ADD # 3

CHECKED BY	Checker
DRAWN BY	DL

LEVEL 2 WASTE AND VENT PLAN AREA B

PW102B

VOLUME 2

D:_BIM\Local Files\13245-Unified Lab Mod II-V13-Mechanical-Central_DLineback.rvt
5/20/2015 11:35:00 AM

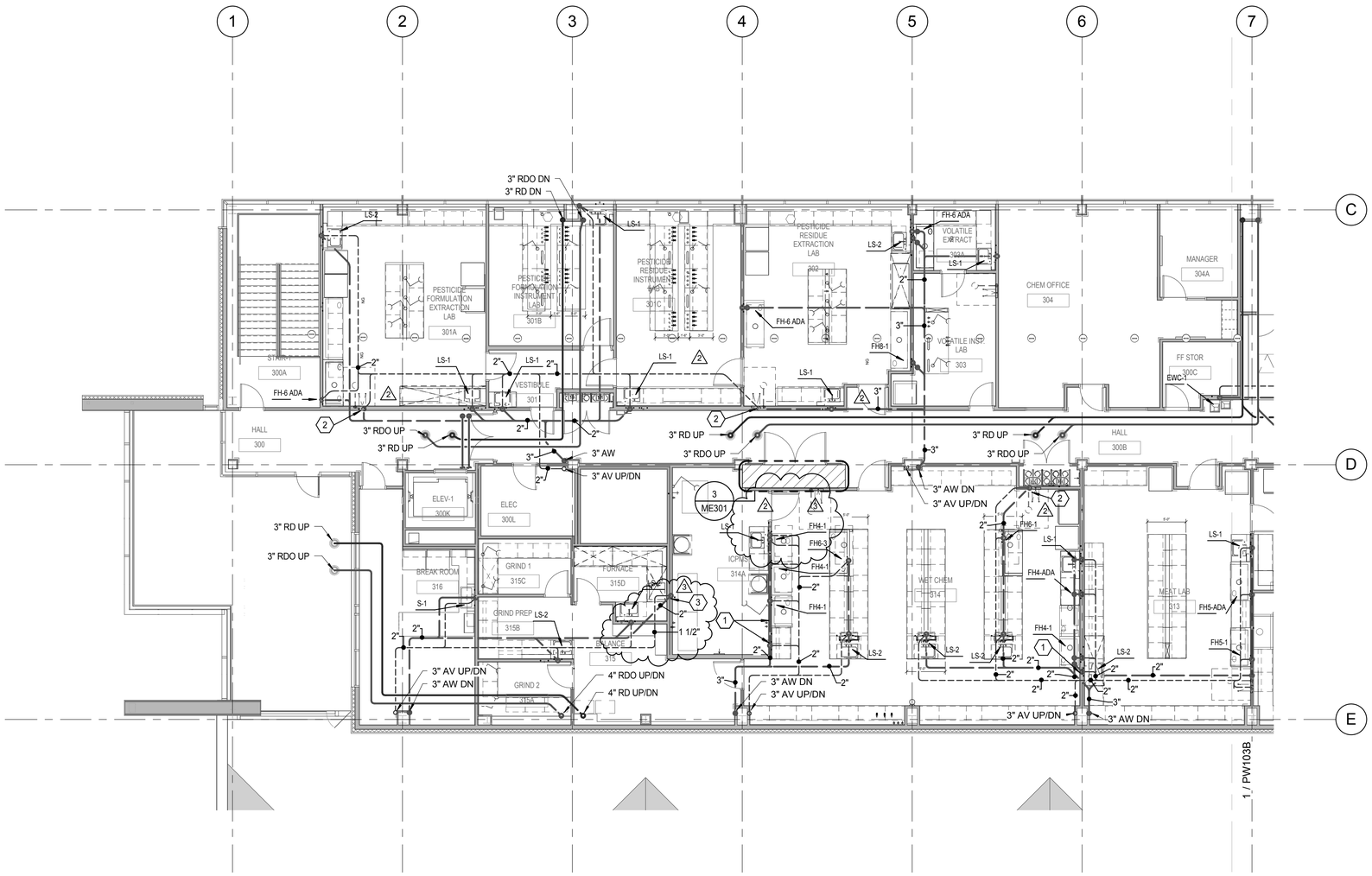

LEVEL 3 WASTE AND VENT PLAN AREA A

1 PW103A
1/8" = 1'-0"

N

KEYED NOTES

1. EXTEND WASTE LINE THRU WALL BEFORE DROPPING TO LEVEL BELOW AT THIS POINT.
2. CONNECT EYEWASH ON SAFETY STATION TO ACID WASTE SYSTEM.
3. WASTE LINE FOR LS-6 CUP SINK, COORDINATE WITH LAB PLANS.

KEY PLAN

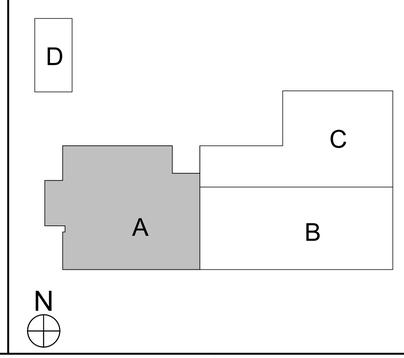

CRSA
649 E. South Temple
Salt Lake City, UT 84102
801.355.5915

MWL
11798 N. Lakeridge Pkwy.
Ashland, VA 23005
804-228-7473

State of Utah
Department of Administrative Services
Division of Facilities Construction & Management
4110 State Office Building
Salt Lake City, Utah 84114
Phone: (801) 538 - 3018
Fax: (801) 538 - 3267

DFCM APPROVAL STAMP

LICENSED PROFESSIONAL ENGINEER
No. 178893
DONALD K. BRADSHAW
STATE OF UTAH

ARCHITECT-ENGINEER STAMP

Unified State Laboratory Module 2

4451 South 2700 West, Taylorsville, UT 84118

DFCM #: 13020300

Project #: B13-024

DATE:	ISSUE TYPE:
April 21, 2014	BID SET
May 8, 2015	ADD # 1
May 14, 2015	ADD # 2
May 20, 2015	ADD # 3

CHECKED BY	Checker
DRAWN BY	DIL

LEVEL 3 WASTE AND VENT PLAN AREA A

PW103A

VOLUME 2

D:\ BIM\Local Files\13245-Unified Lab Mod I-V\13-Mechanical-Central\ DIL\ineback.rvt
5/20/2015 11:35:03 AM

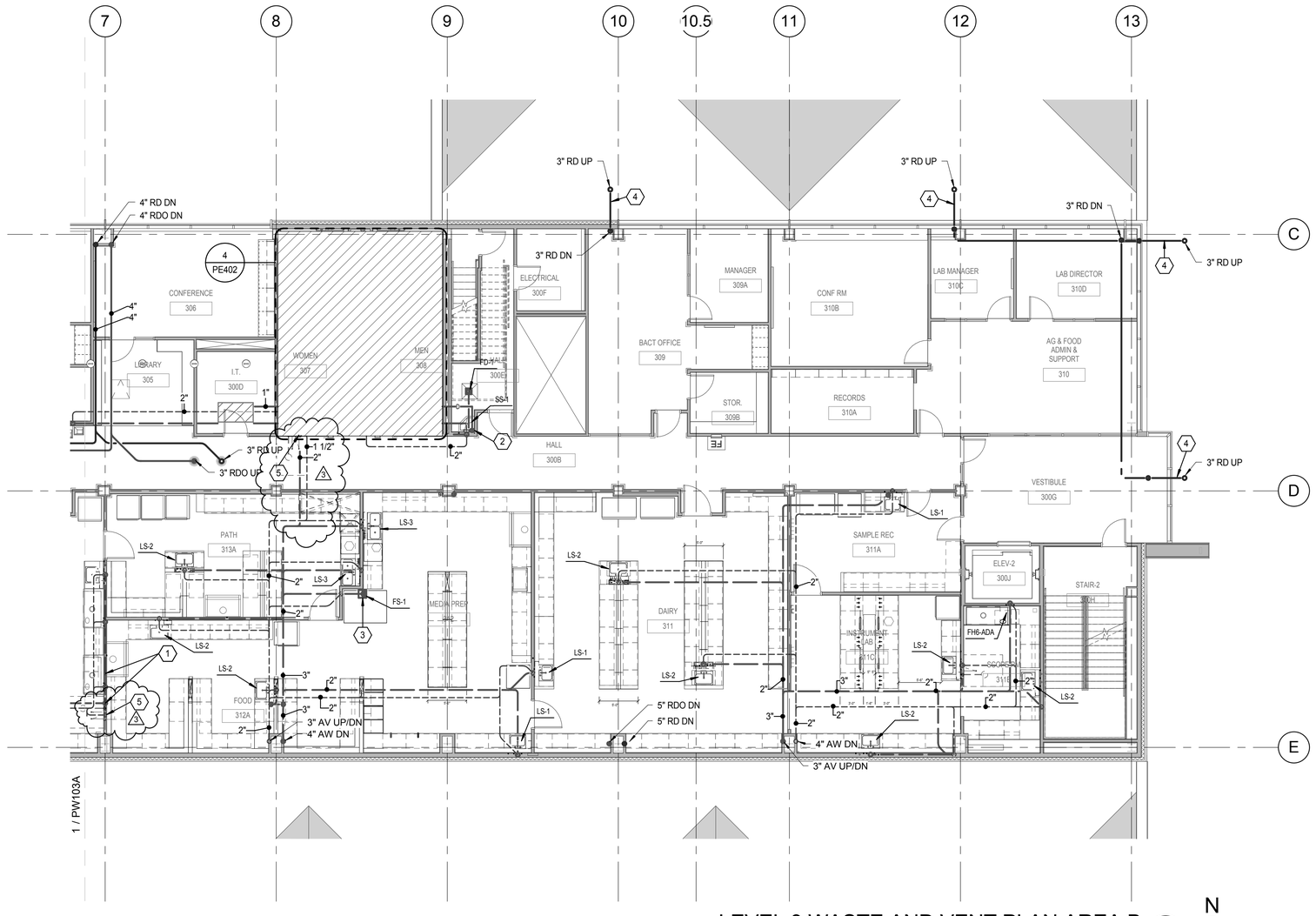

LEVEL 3 WASTE AND VENT PLAN AREA B

1/8" = 1'-0" (1 / PW103B)

N

KEYED NOTES

1. EXTEND WASTE LINE THRU WALL BEFORE DROPPING TO LEVEL BELOW AT THIS POINT.
2. EXTEND CONDENSATE DRAIN LINE AND SLOPE TO JANITOR SINK.
3. COORDINATE FLOOR SINK LOCATION WITH AUTOCLAVE WASTE LINE CONFIGURATION.
4. PROVIDE RAYCHEM 8XL-TRACE 8W/FT, 120V HEAT CABLE IN SANORY DRAINS.
5. CONNECT EYEWASH ON SAFETY STATION TO ACID WASTE SYSTEM. (3)

KEY PLAN

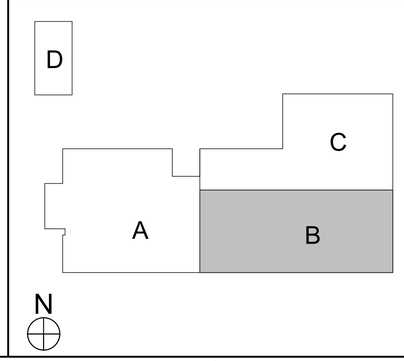

CRSA

649 E. South Temple
Salt Lake City, UT 84102
801.355.5915

MWL

11798 N. Lakeridge Pkwy.
Ashland, VA 23005
804-228-7473

State of Utah
Department of Administrative Services
Division of Facilities Construction & Management
DFCM
4110 State Office Building
Salt Lake City, Utah 84114
Phone: (801) 538 - 3018
Fax: (801) 538 - 3267

DFCM APPROVAL STAMP

LICENSED PROFESSIONAL ENGINEER
No. 178893
DONALD K. BRADSHAW
STATE OF UTAH

ARCHITECT-ENGINEER STAMP

Unified State Laboratory Module 2

4451 South 2700 West, Taylorsville, UT 84118

DFCM #: 13020300

Project #: B13-024

DATE:	ISSUE TYPE:
April 21, 2014	BID SET
May 8, 2015	ADD # 1
May 14, 2015	ADD # 2
May 20, 2015	ADD # 3

CHECKED BY	Checker
DRAWN BY	DL

LEVEL 3 WASTE AND VENT PLAN AREA B

PW103B

VOLUME 2

D:_BIM\Local Files\13245-Unified Lab Mod II-V13-Mechanical-Central_DLineback.rvt
5/20/2015 11:35:06 AM

DOMESTIC EXPANSION TANK SCHEDULE

SYMBOL	MANUF. AND MODEL NO.	LOCATION	SYSTEM SERVED	TYPE	TANK SIZE (GAL)	WORKING FLUID	RELIEF VALVE (PSI)	DIA/ HEIGHT (IN)	NPTM FITTING (IN)	REMARKS
M2-DET-1	AMTROL ST-42-C	MECHANICAL ROOM	DOMESTIC HOT WATER	DIAPHRAM	17.5	WATER	150	16.5/24.5	3/4	
M2-DET-2	AMTROL ST-80-C	MECHANICAL ROOM	INDUSTRIAL HOT WATER	DIAPHRAM	53	WATER	150	24/40.5	1-1/4	

GAS FIRED WATER HEATER SCHEDULE

ID	MANUFACTURER AND MODEL NUMBER	LOCATION	SERVICE	INPUT LOAD (BTUH)	EFFICIENCY (%)	TYPE	RECOVERY RATE @ 100 F DELTA T	TANK SIZE (GAL)	FLUE SIZE (IN)	HEIGHT/ DIAMETER (IN)	ELECTRICAL (AMP)	ELECTRICAL V/PH	NOTES
WH-1	A.O. SMITH CYCLONE Xi BTH 150	CENTRAL MECH.	DOMESTIC HOT WATER	150,000	95	TANK	173	100	4	76/28	6.2	120/1	1
WH-2	A.O. SMITH CYCLONE Xi BTH 150	CENTRAL MECH.	DOMESTIC HOT WATER	150,000	95	TANK	173	100	4	76/28	6.2	120/1	1
WH-3	A.O. SMITH CYCLONE Xi BTH 400	CENTRAL MECH.	INDUSTRIAL HOT WATER	399,900	95	TANK	466	130	6	76/28	6.2	120/1	1
WH-4	A.O. SMITH CYCLONE Xi BTH 400	CENTRAL MECH.	INDUSTRIAL HOT WATER	399,900	95	TANK	466	130	6	76/28	6.2	120/1	1

1. PROVIDE WITH CONCENTRIC VENT KIT

VACUUM PUMP SCHEDULE

SYMBOL	MANUF. AND MODEL NO.	LOCATION	SERVICE	TYPE	MAXIMUM FLOW EA. PUMP @ 19" HG (SCFM)	MAXIMUM FLOW EA. PUMP @ 23" HG (SCFM)	SEAL WATER (GPM)	COOLANT WATER (GPM)	RECEIVER SIZE (GAL)	RECEIVER TYPE	HEIGHT/ DIA. (IN)	MOTOR HP EACH MOTOR	RPM	VOLT/PH	SIZE LENGTH/ WIDTH/ HEIGHT (IN)	REMARKS
VP-4	BEACON LPV25T-L240	MECH. RM.	LAB	LUB ROTRY	159	115	-.-	-.-	-.-	-.-	-.-	1@25	1740	460/3	153/78/96	1,2

1. ADD ADDITIONAL PUMP TO EXISTING LUBRICATED ROTARY VANE TRIPLEX PUMP PACKAGE, MODIFY CONTROL PANEL, STARTERS AND DISCONNECT.
2. PUMP SELECTION BASED ON SEA LEVEL VALUES AS SHOWN.

FUMEHOOD AND BIO SAFETY CABINET PLUMBING CONNECTION SCHEDULE

SYMBOL	LEVEL	ROOM NUMBER	QTY OF FH PER ROOM	ICW*	IHW*	CUPSINK WASTE	VENT	LA	LV	NG
FH4-1	3	314	3	1/2	-.-	1 1/2	1 1/2	1/2	3/4	-.-
FH4-1	3	314	1	1/2	-.-	1 1/2	1 1/2	1/2	-.-	-.-
FH4-ADA	2	211	1	1/2	-.-	1 1/2	1 1/2	1/2	3/4	-.-
FH4-ADA	3	314	1	1/2	-.-	1 1/2	1 1/2	1/2	-.-	-.-
FH5-ADA	1	124D	1	1/2	-.-	1 1/2	1 1/2	-.-	-.-	-.-
FH5-ADA	3	313	1	1/2	-.-	1 1/2	1 1/2	1/2	3/4	-.-
FH6-1	2	211	3	1/2	-.-	1 1/2	1 1/2	1/2	3/4	-.-
FH6-1	2	211A	1	1/2	-.-	1 1/2	1 1/2	1/2	3/4	-.-
FH6-1	2	205B	1	1/2	-.-	1 1/2	1 1/2	1/2	3/4	-.-
FH6-1	3	314	1	1/2	-.-	1 1/2	1 1/2	1/2	3/4	-.-
FH6-3	3	314	1	1/2	-.-	1 1/2	1 1/2	1/2	3/4	-.-
FH6-ADA	1	215	1	1/2	-.-	1 1/2	1 1/2	-.-	3/4	-.-
FH6-ADA	1	213	1	1/2	-.-	1 1/2	1 1/2	-.-	3/4	1/2
FH6-ADA	1	205B	1	1/2	-.-	1 1/2	1 1/2	1/2	3/4	-.-
FH6-ADA	3	301A	1	1/2	-.-	1 1/2	1 1/2	1/2	3/4	1/2
FH6-ADA	3	302	1	1/2	-.-	1 1/2	1 1/2	-.-	3/4	1/2
FH6-ADA	3	303A	1	1/2	-.-	1 1/2	1 1/2	1/2	3/4	1/2
FH6-ADA	3	311B	1	1/2	-.-	1 1/2	1 1/2	1/2	3/4	1/2
FH6-ADASS	2	212	1	1/2	1/2	-.-	-.-	1/2	3/4	-.-
FH8-1	2	211	1	1/2	-.-	1 1/2	1 1/2	1/2	3/4	-.-
FH8-1	3	301A	1	1/2	-.-	1 1/2	1 1/2	1/2	3/4	1/2
FH8-1	3	302	1	1/2	-.-	1 1/2	1 1/2	-.-	3/4	1/2
FH8-1SS	2	212	1	1/2	1/2	-.-	-.-	1/2	3/4	-.-
BSC4-A2	3	313A	1	-.-	-.-	-.-	-.-	-.-	-.-	1/2
BSC4-A2	3	312A	1	-.-	-.-	-.-	-.-	-.-	-.-	1/2

* ICW AND IHW WATER PIPING SHALL HAVE AN ACCESSIBLE, BELOW CEILING SPILL PROOF VACUUM BREAKER BEFORE CONNECTING TO THE FUME HOOD.

WATER SOFTENER SCHEDULE

SYMBOL	MANUF. AND MODEL NO.	LOCATION	TYPE	TOTAL (GRAINS)	WATER FLOW @ 15 PSI LOSS (GPM)	WATER FLOW @ 25 PSI LOSS (GPM)	RESIN EACH (FT^3)	RESIN TANK HGHT/DIA (IN)	REMARKS
M2-WS-3	CULLIGAN CSM 600-2	MECH. RM.	TRYPLEX	600,000	183	252	20	36/60	1,2

1. PRESENTLY EXISTING DUPLEX SOFTNER SYSTEM, PROVIDE ADDITIONAL TANK FOR TRIPLEX SET UP.
2. PROVIDE 115V CONTROL POWER TO UNIT.

LAB GAS OUTLET CONNECTION SCHEDULE

SYMBOL	ROOM NUMBER(S)	LAB GAS AR5	CH45	H5	HE5	LA5	LA	NI5	SP	NOTES
AR5-1	211B	3/8	-.-	-.-	-.-	-.-	-.-	-.-	-.-	1
CA-1	3 205C,314A	-.-	-.-	-.-	-.-	-.-	1/2	-.-	-.-	1
CH45-1	211B	-.-	3/8	-.-	-.-	-.-	-.-	-.-	-.-	1
H5-1	211B,301B,301C,304	-.-	-.-	3/8	-.-	-.-	-.-	-.-	-.-	1
HE5-1	211B,301B,301C,303,304,311C,314	-.-	-.-	-.-	3/8	-.-	-.-	-.-	-.-	1
LA5-1	211B,301B,303,304,301C,311C	-.-	-.-	-.-	-.-	3/8	-.-	-.-	-.-	1
NI5-1	302	-.-	-.-	-.-	-.-	-.-	-.-	3/8	-.-	1
SP-1	301B,301C,303	-.-	-.-	-.-	-.-	-.-	-.-	-.-	3/8	1
-.-	-.-	-.-	-.-	-.-	-.-	-.-	-.-	-.-	-.-	-.-

1. OUTLET FURNISHED BY SEPARATE DIVISION. ROUGH IN AND CONNECT.

THERMOSTATIC MIXING VALVE SCHEDULE

ID	MANUFACTURER AND MODEL NUMBER	LOCATION	SYSTEM	BODY CONSTRUCTION	FLUID FLOW RATE (GPM)	FLUID HEAD LOSS (PSI)	PHYSICAL INLET/OUTLET SIZE (IN)	NOTES
M2- TMV-1	LEONARD TM-LV-984-LF-BDT	MECH. RM.	DHW	BRONZE/SS	35	<5	1 1/4/1 1/2	1
M2- TMV-2	LEONARD TM-LV-984-LF-BDT	MECH. RM.	IHW	BRONZE/SS	41	5	1 1/4/1 1/2	1
M2- TMV-3	LEONARD TM-5100	MECH. RM.	ES	BRONZE	46	5	1 1/4/1 1/2	2

1. SET OUTLET TEMPERATURE TO 125°F
2. SET OUTLET TEMPERATURE TO 90° F.

AIR COMPRESSOR SCHEDULE

3

SYMBOL	MANUF. AND MODEL NO.	LOCATION	SERVICE	MAXIMUM FLOW (ACFM)	MAXIMUM PUMP PRESS. (PSIG)	TYPE	RECEIVER SIZE (GAL)	RECEIVER TYPE	HEIGHT/ DIA. (IN)	MOTOR HP EACH MOTOR	RPM	VOLT/PH	SIZE LENGTH/ WIDTH/ HEIGHT (IN)	REMARKS
M2-AC-1	INGERSOLL RAND 2475N7.5	VEHICLE BAY	SHOP AIR SYSTEM	24	200	RECIPROCATING	80	VERTICAL	46/24	1@7.5	3450	460/3	48/40/76	1

1. PUMP SELECTION BASED ON SEA LEVEL VALUES AS SHOWN.

CRSA
649 E. South Temple
Salt Lake City, UT 84102
801.355.5915

MWL
11798 N. Lakeridge Pkwy.
Ashland, VA 23005
804-228-7473

State of Utah
Department of Administrative Services
Division of Facilities Construction & Management
4110 State Office Building
Salt Lake City, Utah 84114
Phone: (801) 538 - 3018
Fax: (801) 538 - 3267

DFCM APPROVAL STAMP

LICENSED PROFESSIONAL ENGINEER No. 178893 DONALD K. BRADSHAW STATE OF UTAH

ARCHITECT-ENGINEER STAMP

Unified State Laboratory Module 2
4451 South 2700 West, Taylorsville, UT 84118

DFCM #: 13020300
Project #: B13-024

DATE:	ISSUE TYPE:
April 21, 2014	BID SET
1 May 8, 2015	ADD # 1
2 May 14, 2015	ADD # 2
3 May 20, 2015	ADD # 3

CHECKED BY: J. Maeser
DRAWN BY: Author

PLUMBING SCHEDULES

PE602
VOLUME 2

D:_BIM\Local Files\13245-Unified Lab Mod II-V13-Mechanical-Central_DLineback.rvt
5/20/2015 11:37:46 AM

GENERAL SHEET NOTES

SHEET KEYNOTES

1. EXISTING 6" CND PROVIDED IN PREVIOUS PROJECT FOR USE OF RMP PRIMARY POWER. FIELD VERIFY EXACT LOCATION.
2. EXISTING CONDUITS STUBBED OUT FROM MODULE 1 FOR FUTURE USE (NOT ANTICIPATED TO BE USED FOR MODULE 2). LOCATE AND MARK ON RECORD DRAWINGS.
3. LOCATE AND PROTECT EXISTING CONDUIT STUBOUTS DURING CONSTRUCTION OF NEW ADDITION. EXTEND CONDUITS AND STUB BEYOND THE EXTENTS OF THE NEW ADDITION.
4. EXISTING TELECOMM CONDUITS STUBBED OUT OF MODULE 1. FIELD VERIFY LOCATION TO CONNECT AND EXTEND AS INDICATED.
5. EXTEND TELECOMM CONDUITS. PROVIDE 4'X4'X4' CONCRETE PULL BOX WITH HINGED METAL LID, THEN PROVIDE NEW (4) 4" CONDUITS FROM PULL BOX INTO NEW BUILDING MAIN TELECOMM ROOM.
6. PROVIDE 1 EA, 1" C FOR GATE CONTROL BACK TO ACS1 IN COMM ROOM 100G.
7. CIRCUIT TO 120/208 V GENERATOR AUXILIARY PANEL.
8. IRRIGATION CONTROLLER LOCATION. PROVIDE 2" CONDUIT FROM DFCM STORAGE ROOM #116 TO APPROXIMATE LOCATION 4' FROM EDGE OF BUILDING FOOTPRINT.
9. CONNECTION FOR GENERATOR AUXILIARY PANEL. FED FROM PANEL "1EL". SEE EP602 FOR WIRE AND CONDUIT REQUIREMENTS. COORDINATE EXACT LOCATION WITH GENERATOR MANUFACTURER.
10. REMOTE POWER SUPPLY FOR (OL-1) LIGHTS TO BE LOCATED IN ELECTRICAL ROOM 100L. COORDINATE LOCATION WITH ELECTRICAL GEAR AND REQUIRED CLEARANCES.

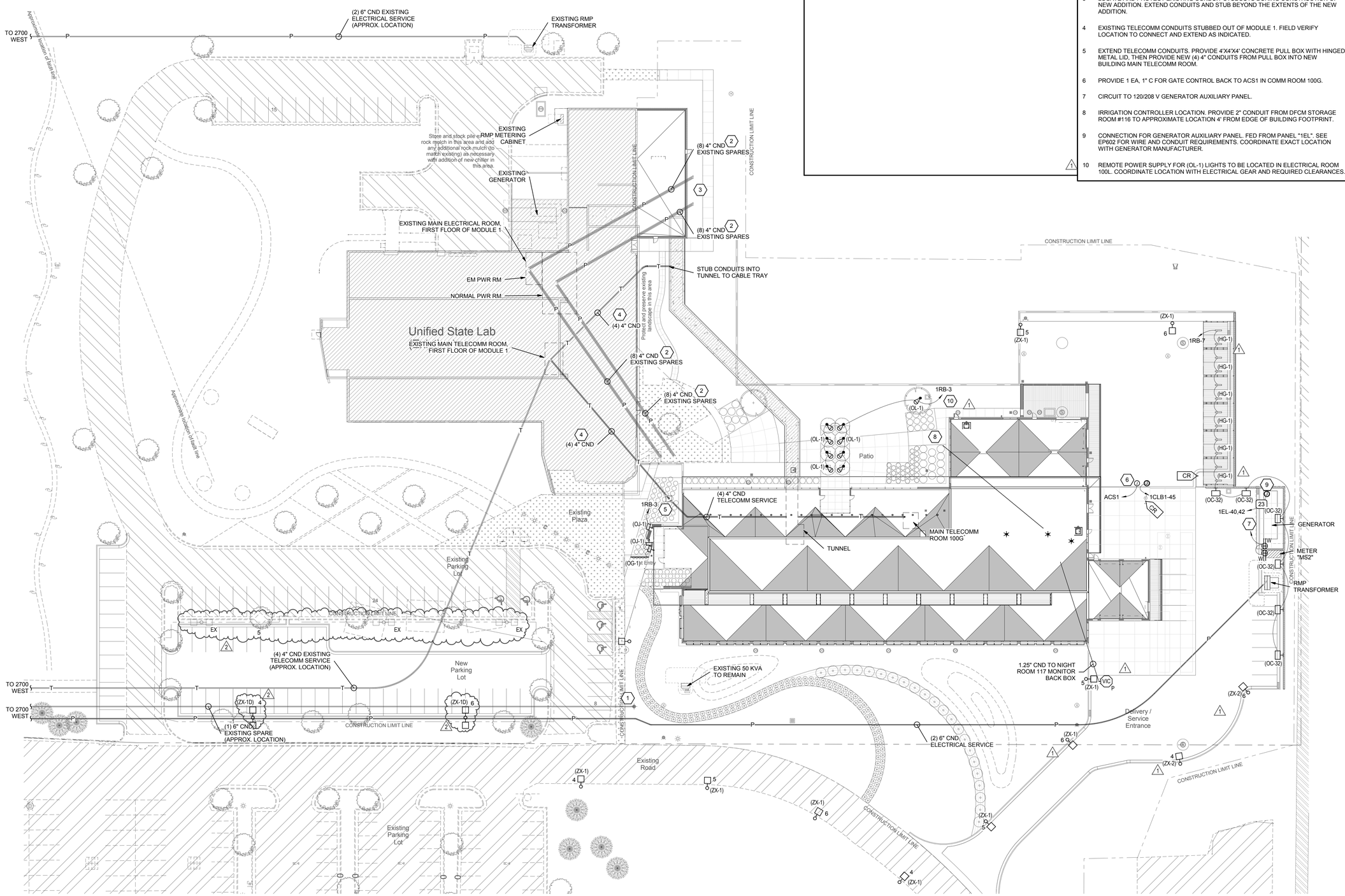

A1 ELECTRICAL SITE PLAN

SCALE: 1" = 30'-0"

CRSA
649 E. South Temple
Salt Lake City, UT 84102
801.355.5915

MWL
11798 N. Lakeridge Pkwy.
Ashland, VA 23005
804-228-7473

State of Utah
Department of Administrative Services
Division of Facilities Construction & Management
4110 State Office Building
Salt Lake City, Utah 84114
Phone: (801) 538 - 3018
Fax: (801) 538 - 3267

DFCM APPROVAL STAMP

LICENSED PROFESSIONAL ENGINEER No. 181563 DAVID E. WESEMANN 04-21-2014 STATE OF UTAH

ARCHITECT-ENGINEER STAMP

Unified State Laboratory Module 2

4451 South 2700 West, Taylorsville, UT 84118

DFCM #:	13020300
Project #:	B13-024

DATE:	ISSUE TYPE:
April 21, 2014	BID SET

MARK	DATE	DESCRIPTION
2	May 20, 2015	ADDENDUM #3

CHECKED BY	D. WESEMANN
DRAWN BY	DLM

SITE ELECTRICAL PLAN

ES102

VOLUME 2

C:\Users\jpm\Desktop\Revit Local Files\2013\20130362Elec Central_jpm.rvt
5/20/2015 5:56:09 PM

GENERAL SHEET NOTES

1. LOCATIONS OF MECHANICAL EQUIPMENT SHOWN IS APPROXIMATE. FIELD COORDINATE EXACT LOCATIONS OF EQUIPMENT PRIOR TO ROUGH-IN.
2. SEE FIRE ALARM PLANS (FA) FOR ELECTRICAL CONNECTIONS TO FIRE ALARM EQUIPMENT/DEVICES.
3. PROVIDE WIRING FROM ALL REFRIGERATORS TO BMS SYSTEM TO MONITOR DRY CONTACTS ALARMS IN REFRIGERATOR.
4. MINIMUM BRANCH CIRCUIT CONDUCTOR SIZE FOR 20A, 120V OR 208V CIRCUITS SHALL BE #10 AWG, UNLESS A LARGER SIZE IS INDICATED OR REQUIRED TO MINIMIZE VOLTAGE DROP.
5. CONTRACTOR TO PROVIDE AT TIME OF OWNER MOVE-IN/OCCUPATION OF BUILDING, (20) NEMA PLUG CONVERSION/REVISIONS TO ACCOMMODATE DIFFERENT EQUIPMENT PLUGS. THIS QUANTITY IS A TOTAL FOR THE BUILDING AND NOT PER DRAWING SHEET.

SHEET KEYNOTES

1. INSTALL GFCI IN PROVIDED SINGLE GANG BOX AND RACEWAY IN AUTOPSY BACKDRAFT STATION.
2. PROVIDE POWER FOR AUTOMATIC SLIDING DOOR. COORDINATE WITH ARCHITECT EXACT LOCATION OF J-BOX AND POWER CONNECTION, FOR SLIDING DOOR, PRIOR TO ROUGH-IN.
3. POWER AND DATA FOR WALL MOUNTED T.V. COORDINATE WITH A/V ROUGH-IN DETAILS.
4. POWER FOR MOTORIZED SCREEN. PROVIDE ALL ELECTRICAL & CONTROL CONDUIT AND WIRING PER MANUFACTURER'S WRITTEN INSTRUCTIONS. INSTALL CONTROL SWITCH IN LOCATION APPROVED BY ARCHITECT. ALSO COORDINATE WITH AV INSTALLER AND INTERFACE WITH AV CONTROLS.
5. PROVIDE 3/4" CND IN WALL FROM SCALE INDICATOR J-BOX THROUGH SCALE PIT METAL FRAME FOR LOAD CELL CABLE.
6. RECEPTACLE OUTLET FOR IRRIGATION CONTROLLER. PROVIDE 2" CND FROM DFCM STORAGE ROOM #116 TO APPROXIMATE LOCATION SHOWN ON ES102.
7. CIRCUIT ELEVATOR PIT LIGHT TO SAME CIRCUIT AS THE ELEVATOR PIT RECEPTACLE.
8. PROVIDE J-BOX FOR MECHANICAL CONTROL CIRCUITS. COORDINATE EXACT LOCATION WITH CONTROL CONTRACTOR PRIOR TO ROUGH-IN.
9. CEILING DATA OUTLET FOR PTZ DOCUMENT CAMERA. COORDINATE EXACT LOCATION WITH AV INSTALLER/OWNER/ARCHITECT PRIOR TO ROUGH-IN.

SHEET KEYNOTES

10. PROVIDE OUTLET FOR SPACESAVER. FINAL OUTLET LOCATION TO BE COORDINATED WITH ARCHITECT.
11. PROVIDE CONNECTIONS TO LIGHTS AND SWITCHES THAT ARE FURNISHED WITH THE COOLER/FREEZERS. COORDINATE WITH SHOP DRAWINGS AND INSTALLERS OF COOLERS/FREEZERS.

KEY PLAN

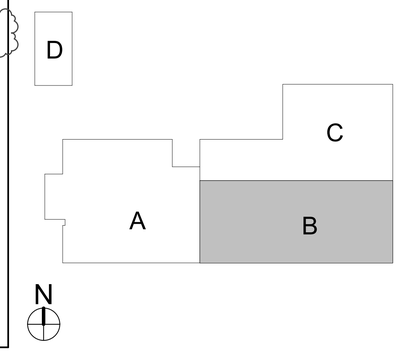

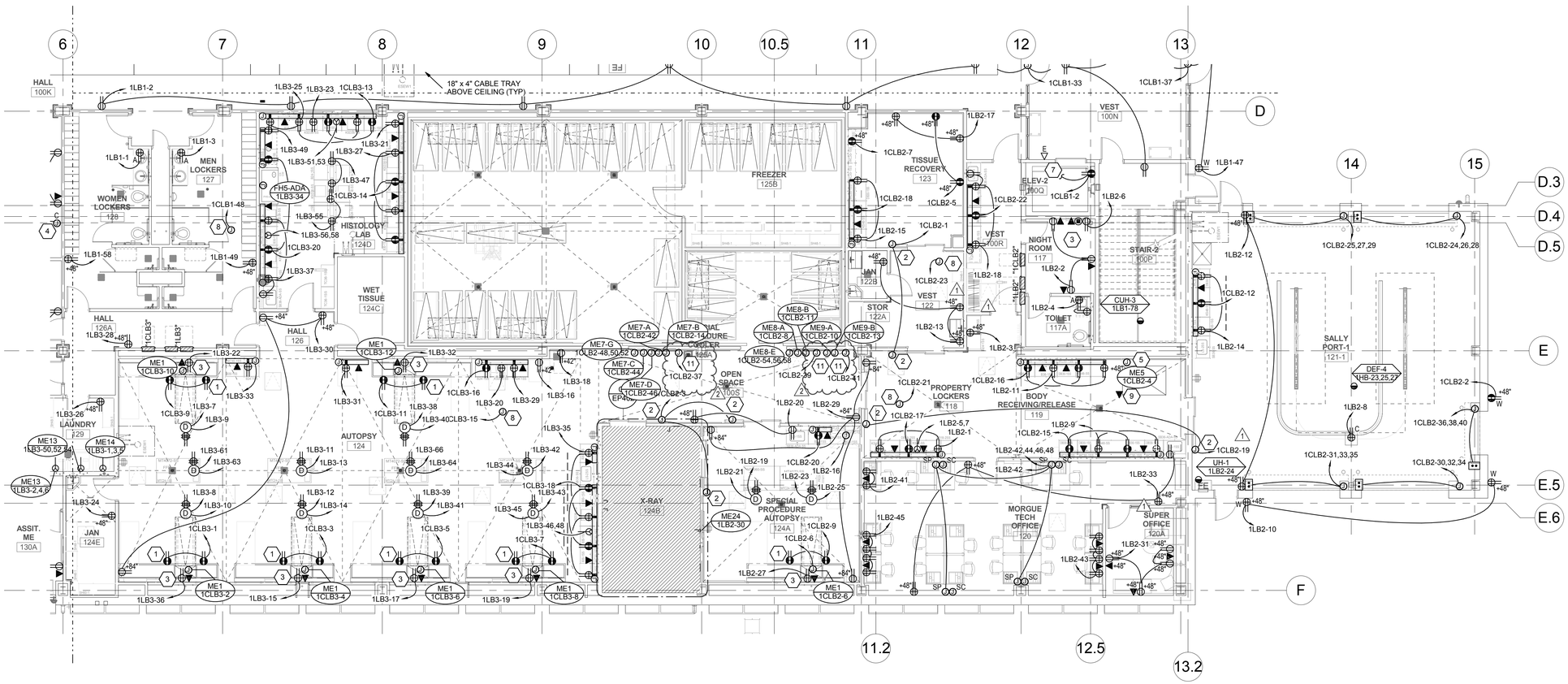

A1 FIRST LEVEL POWER PLAN - AREA B

SCALE: 1/8" = 1'-0"

C:\Users\jpm\Desktop\Revit Local Files\2013\20130362\Elec Central_jpm.rvt
5/20/2015 5:52:31 PM

CRSA
649 E. South Temple
Salt Lake City, UT 84102
801.355.5915

MWL
11798 N. Lakeridge Pkwy.
Ashland, VA 23005
804-228-7473

State of Utah
Department of Administrative Services
Division of Facilities Construction & Management
4110 State Office Building
Salt Lake City, Utah 84114
Phone: (801) 538 - 3018
Fax: (801) 538 - 3267

DFCM APPROVAL STAMP

LICENSED PROFESSIONAL ENGINEER No. 181563 DAVID E. WESEMANN 04-21-2014 STATE OF UTAH

ARCHITECT-ENGINEER STAMP

Unified State Laboratory Module 2

4451 South 2700 West, Taylorsville, UT 84118

DFCM #:	13020300
Project #:	B13-024
DATE:	ISSUE TYPE:
April 21, 2014	BID SET

MARK	DATE	DESCRIPTION
2	May 20, 2015	ADDENDUM #3

CHECKED BY	D. WESEMANN
DRAWN BY	DLM

FIRST LEVEL POWER PLAN - AREA B

EP101b

VOLUME 2

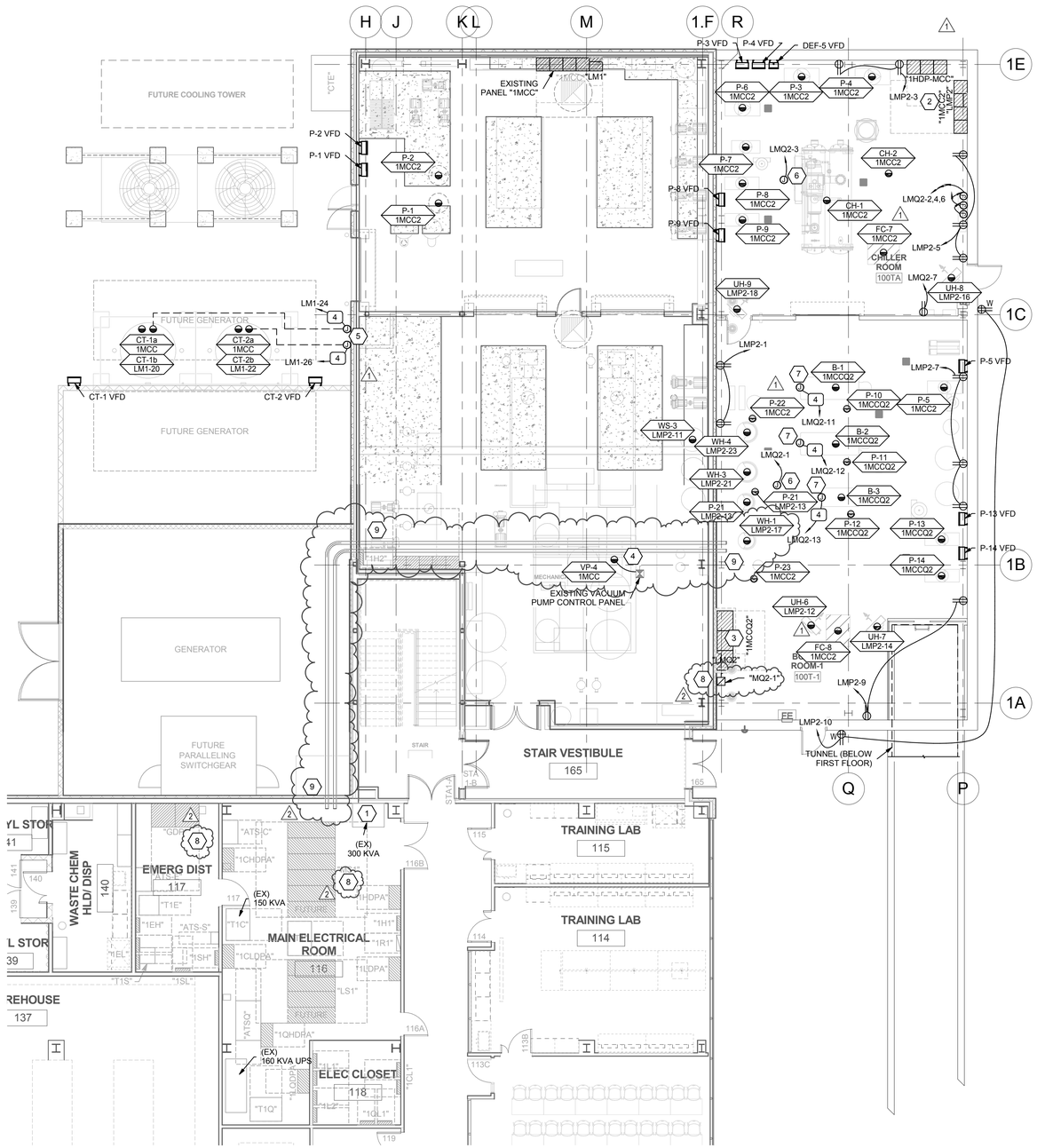

A2 FIRST LEVEL POWER PLAN - AREA D

SCALE: 1/8" = 1'-0"

GENERAL SHEET NOTES

1. LOCATIONS OF MECHANICAL EQUIPMENT SHOWN IS APPROXIMATE. FIELD COORDINATE EXACT LOCATIONS OF EQUIPMENT PRIOR TO ROUGH-IN.
2. SEE FIRE ALARM PLANS (FA) FOR ELECTRICAL CONNECTIONS TO FIRE ALARM EQUIPMENT/DEVICES.
3. PROVIDE WIRING FROM ALL REFRIGERATORS TO BMS SYSTEM TO MONITOR DRY CONTACTS ALARMS IN REFRIGERATOR.
4. MINIMUM BRANCH CIRCUIT CONDUCTOR SIZE FOR 20A, 120V OR 208V CIRCUITS SHALL BE #10 AWG, UNLESS A LARGER SIZE IS INDICATED OR REQUIRED TO MINIMIZE VOLTAGE DROP.
5. CONTRACTOR TO PROVIDE AT TIME OF OWNER MOVE-IN/OCCUPATION OF BUILDING, (20) NEMA PLUG CONVERSION/REVISIONS TO ACCOMMODATE DIFFERENT EQUIPMENT PLUGS. THIS QUANTITY IS A TOTAL FOR THE BUILDING AND NOT PER DRAWING SHEET.

SHEET KEYNOTES

1. EXISTING 300 KVA TRANSFORMER WAS REMOVED AND STORED IN THIS LOCATION FROM A PREVIOUS PROJECT. RELOCATE/REUSE TRANSFORMER AS INDICATED IN DRAWINGS. RELABEL TRANSFORMER AS "T1A". SEE A1/EP101A AND A1/EP601.
2. TRANSFORMER MCCT2 AND PANEL LM2 LOCATED INSIDE OF 1MCC2.
3. TRANSFORMER MCCQ2T AND PANEL LMQ2 LOCATED INSIDE OF 1MCCQ2.
4. PROVIDE CONNECTION TO VP-4 FROM EXISTING MOTOR CONTROL CENTER "1MCC" THROUGH EXISTING VACUUM PUMP CONTROL PANEL. SEE ONE-LINE AND MECHANICAL EQUIPMENT SCHEDULE FOR ADDITONAL INFORMATION.
5. PROVIDE HEAT TRACE FOR COOLING TOWER PIPES.
6. PROVIDE J-BOX FOR MECHANICAL CONTROL CIRCUITS. COORDINATE EXACT LOCATION WITH CONTROL CONTRACTOR PRIOR TO ROUGH-IN.
7. BOILER CONTROL CIRCUIT.
8. PROVIDE A PERMANENT ENGRAVED PLAQUE AT EACH MAIN DISCONNECT LOCATION, INDICATING THE LOCATION OF THE OTHER MAIN DISCONNECTS FROM POWER SOURCES ENTERING THE BUILDING. PLAQUE TO INCLUDE BUILDING FLOOR PLAN AND TEXT CLEARLY SHOWING LOCATION OF OTHER DISCONNECTS.
9. ROUTE FEEDER CONDUITS FROM EXISTING MAIN ELECTRICAL ROOM TO NEW MECHANICAL ROOM ALONG APPROXIMATE ROUTE INDICATED. NOT ALL BENDS, OFFSETS, AND CHANGES IN ELEVATION ARE SHOWN. FIELD VERIFY EXACT ROUTE. SEAL ALL PENETRATIONS.

KEY PLAN

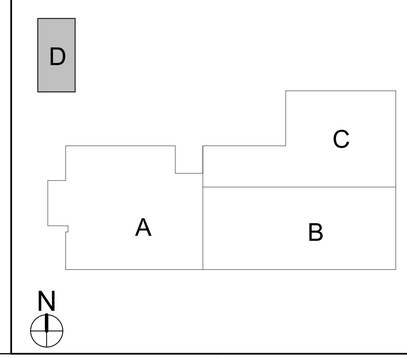

CRSA
649 E. South Temple
Salt Lake City, UT 84102
801.355.5915

MWL
11798 N. Lakeridge Pkwy.
Ashland, VA 23005
804-228-7473

State of Utah
Department of Administrative Services
Division of Facilities Construction & Management
4110 State Office Building
Salt Lake City, Utah 84114
Phone: (801) 538 - 3018
Fax: (801) 538 - 3267

DFCM APPROVAL STAMP

LICENSED PROFESSIONAL ENGINEER
No. 181563
DAVID E. WESEMANN
04-21-2014
STATE OF UTAH

ARCHITECT-ENGINEER STAMP

Unified State Laboratory Module 2

4451 South 2700 West, Taylorsville, UT 84118

DFCM #:	13020300
Project #:	B13-024
DATE: April 21, 2014	ISSUE TYPE: BID SET

MARK	DATE	DESCRIPTION
2	May 20, 2015	ADDENDUM #3

CHECKED BY	D. WESEMANN
DRAWN BY	DLM

FIRST LEVEL POWER PLAN - AREA D

EP101d

VOLUME 2

C:\Users\jpm\Desktop\Revit Local Files\2013\2013030925Elec Central_jpm.rvt
5/20/2015 5:52:57 PM

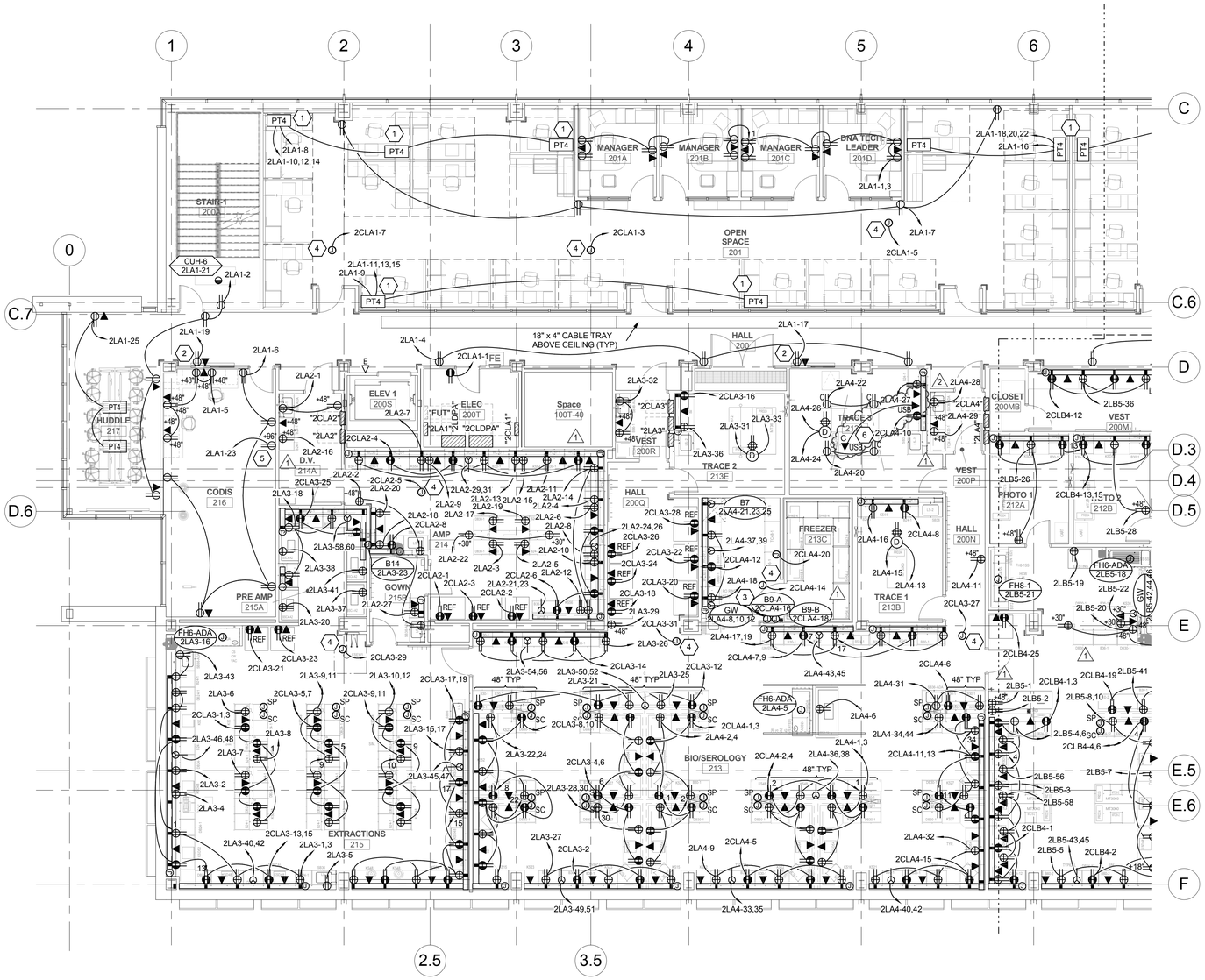

A1 SECOND LEVEL POWER PLAN - AREA A

SCALE: 1/8" = 1'-0"

C:\Users\jpm\Desktop\Revit Local Files\2013\20130362Elec Central_jpm.rvt
5/20/2015 5:53:01 PM

GENERAL SHEET NOTES

1. LOCATIONS OF MECHANICAL EQUIPMENT SHOWN IS APPROXIMATE. FIELD COORDINATE EXACT LOCATIONS OF EQUIPMENT PRIOR TO ROUGH-IN.
2. SEE FIRE ALARM PLANS (FA) FOR ELECTRICAL CONNECTIONS TO FIRE ALARM EQUIPMENT/DEVICES.
3. PROVIDE WIRING FROM ALL REFRIGERATORS TO BMS SYSTEM TO MONITOR DRY CONTACTS ALARMS IN REFRIGERATOR.
4. MINIMUM BRANCH CIRCUIT CONDUCTOR SIZE FOR 20A, 120V OR 208V CIRCUITS SHALL BE #10 AWG, UNLESS A LARGER SIZE IS INDICATED OR REQUIRED TO MINIMIZE VOLTAGE DROP.
5. CONTRACTOR TO PROVIDE AT TIME OF OWNER MOVE-IN/OCCUPATION OF BUILDING, (20) NEMA PLUG CONVERSION/REVISIONS TO ACCOMMODATE DIFFERENT EQUIPMENT PLUGS. THIS QUANTITY IS A TOTAL FOR THE BUILDING AND NOT PER DRAWING SHEET.

SHEET KEYNOTES

1. PROVIDE ELECTRICAL CONNECTIONS TO SYSTEMS FURNITURE. DESIGN IS BASED ON 4 CIRCUIT/8 WIRE SYSTEM (3 CIRCUITS, SHARED OVERSIZED NEUTRAL AND GROUND, PLUS 1 CIRCUIT WITH DEDICATED NEUTRAL AND GROUND). VERIFY WIRING CONFIGURATION AND FEED POINT WITH SYSTEMS FURNITURE INSTALLER PRIOR TO INSTALLATION. COORDINATE WITH FURNITURE INSTALLER SUCH THAT CIRCUITS ARE UNIFORMLY DISTRIBUTED TO NO MORE THAN 4 WORKSTATIONS PER CIRCUIT AND EACH WORKSTATION ONLY HAVING AVAILABLE IT'S ASSIGNED CIRCUIT. COPIER OR PRINTERS LOCATED IN A GROUP OF WORKSTATIONS SHALL RECEIVE A DEDICATED CIRCUIT.
2. POWER AND DATA FOR WALL MOUNTED T.V. COORDINATE WITH A/V ROUGH-IN DETAILS.
3. PROVIDE POWER TO FREEZER ROOM SINGLE POINT OF CONNECTION. REFER TO LAB EQUIPMENT SCHEDULE FOR CONDUIT AND CONDUCTOR REQUIREMENTS. COORDINATE EXACT LOCATION WITH FREEZER ROOM CONTRACTOR.
4. PROVIDE J-BOX FOR MECHANICAL CONTROL CIRCUITS. COORDINATE EXACT LOCATION WITH CONTROL CONTRACTOR PRIOR TO ROUGH-IN.
5. PROVIDE OUTLET FOR SPACESAVER. FINAL OUTLET LOCATION TO BE COORDINATED WITH ARCHITECT.
6. EJ - AUDIO VIDEO

KEY PLAN

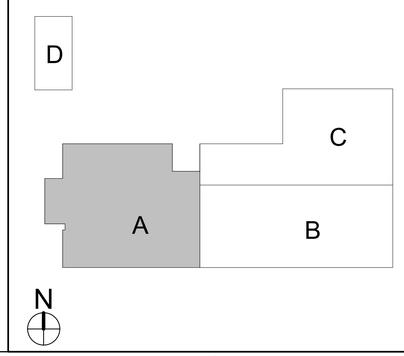

CRSA
649 E. South Temple
Salt Lake City, UT 84102
801.355.5915

MWL
11798 N. Lakeridge Pkwy.
Ashland, VA 23005
804-228-7473

State of Utah
Department of Administrative Services
Division of Facilities Construction & Management
4110 State Office Building
Salt Lake City, Utah 84114
Phone: (801) 538 - 3018
Fax: (801) 538 - 3267

DFCM APPROVAL STAMP

ARCHITECT-ENGINEER STAMP
No. 181563
DAVID E. WESEMANN
04-21-2014
STATE OF UTAH

Unified State Laboratory Module 2

4451 South 2700 West, Taylorsville, UT 84118

DFCM #:	13020300
Project #:	B13-024

DATE:	ISSUE TYPE:
April 21, 2014	BID SET

MARK	DATE	DESCRIPTION
2	May 20, 2015	ADDENDUM #3

CHECKED BY	D. WESEMANN
DRAWN BY	DLM

SECOND LEVEL POWER PLAN - AREA A

EP102a

VOLUME 2

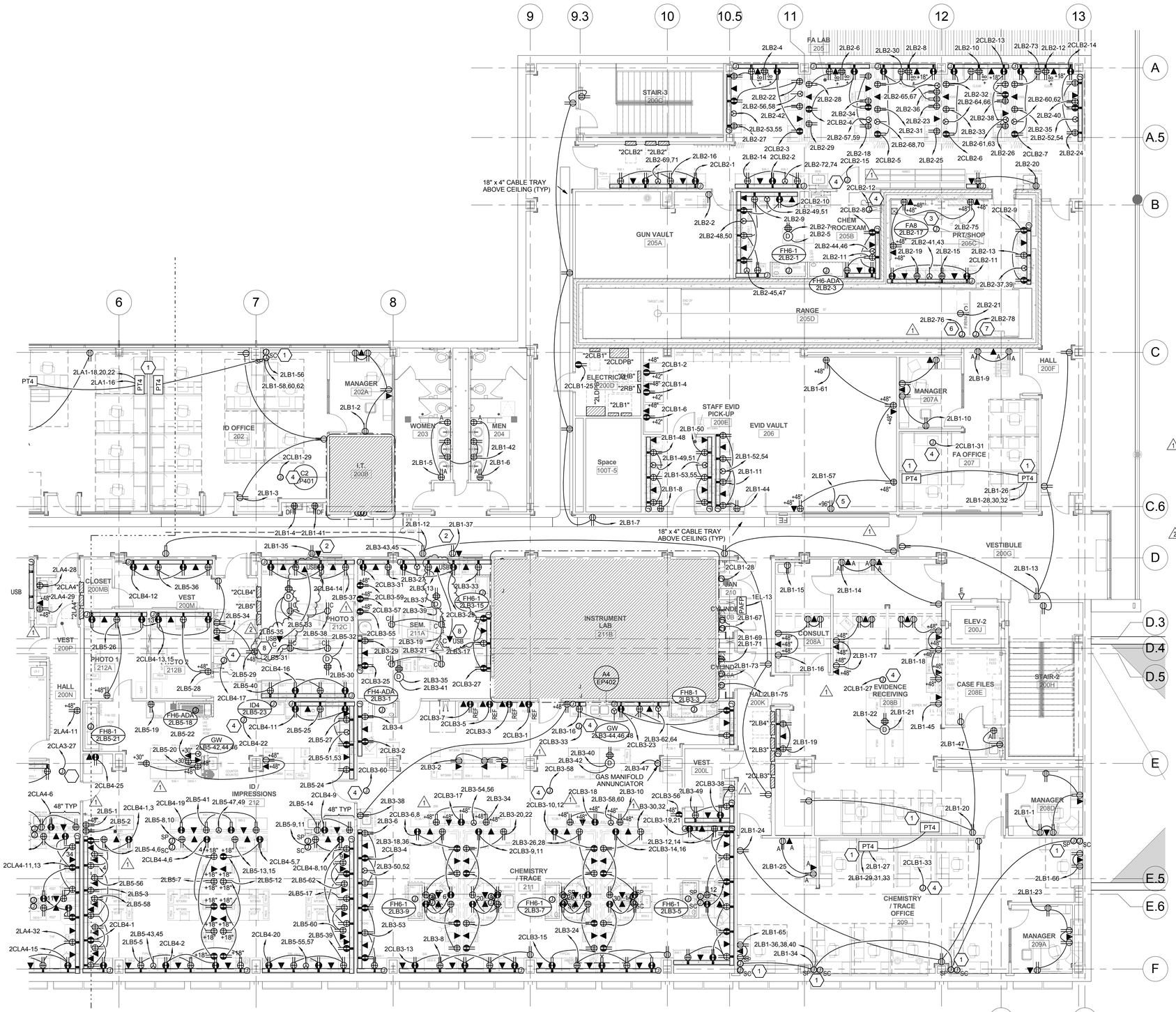

A1 SECOND LEVEL POWER PLAN - AREA B

SCALE: 1/8" = 1'-0"

GENERAL SHEET NOTES

1. LOCATIONS OF MECHANICAL EQUIPMENT SHOWN IS APPROXIMATE. FIELD COORDINATE EXACT LOCATIONS OF EQUIPMENT PRIOR TO ROUGH-IN.
2. SEE FIRE ALARM PLANS (FA) FOR ELECTRICAL CONNECTIONS TO FIRE ALARM EQUIPMENT/DEVICES.
3. PROVIDE WIRING FROM ALL REFRIGERATORS TO BMS SYSTEM TO MONITOR DRY CONTACTS ALARMS IN REFRIGERATOR.
4. MINIMUM BRANCH CIRCUIT CONDUCTOR SIZE FOR 20A, 120V OR 208V CIRCUITS SHALL BE #10 AWG, UNLESS A LARGER SIZE IS INDICATED OR REQUIRED TO MINIMIZE VOLTAGE DROP.
5. CONTRACTOR TO PROVIDE AT TIME OF OWNER MOVE-IN/OCCUPATION OF BUILDING, (20) NEMA PLUG CONVERSION/REVISIONS TO ACCOMMODATE DIFFERENT EQUIPMENT PLUGS. THIS QUANTITY IS A TOTAL FOR THE BUILDING AND NOT PER DRAWING SHEET.

SHEET KEYNOTES

1. PROVIDE ELECTRICAL CONNECTIONS TO SYSTEMS FURNITURE. DESIGN IS BASED ON 4 CIRCUIT/8 WIRE SYSTEM (3 CIRCUITS, SHARED OVERSIZED NEUTRAL AND GROUND, PLUS 1 CIRCUIT WITH DEDICATED NEUTRAL AND GROUND). VERIFY WIRING CONFIGURATION AND FEED POINT WITH SYSTEMS FURNITURE INSTALLER PRIOR TO INSTALLATION. COORDINATE WITH FURNITURE INSTALLER SUCH THAT CIRCUITS ARE UNIFORMLY DISTRIBUTED TO NO MORE THAN 4 WORKSTATIONS PER CIRCUIT AND EACH WORKSTATION ONLY HAVING AVAILABLE IT'S ASSIGNED CIRCUIT. COPIER OR PRINTERS LOCATED IN A GROUP OF WORKSTATIONS SHALL RECEIVE A DEDICATED CIRCUIT.
2. POWER AND DATA FOR WALL MOUNTED T.V. COORDINATE WITH A/V ROUGH-IN DETAILS.
3. DISCONNECT SHALL BE MOUNTED ON WALL ADJACENT TO THE SYSTEM ELECTRICAL PANEL AT BACK OF TANK.
4. PROVIDE J-BOX FOR MECHANICAL CONTROL CIRCUITS. COORDINATE EXACT LOCATION WITH CONTROL CONTRACTOR PRIOR TO ROUGH-IN.
5. PROVIDE OUTLET FOR SPACESAVER. FINAL OUTLET LOCATION TO BE COORDINATED WITH ARCHITECT.
6. PROVIDE POWER FOR FIRING RANGE HVAC CONTROLS. COORDINATE EXACT LOCATION AND REQUIREMENTS WITH FIRING RANGE HVAC INSTALLER PRIOR TO ROUGH-IN.
7. PROVIDE POWER FOR FIRING RANGE TARGET TROLLEY CONTROLS. COORDINATE EXACT LOCATION AND REQUIREMENTS WITH TARGET TROLLEY INSTALLER PRIOR TO ROUGH-IN.
8. EJ - AUDIO VIDEO

KEY PLAN

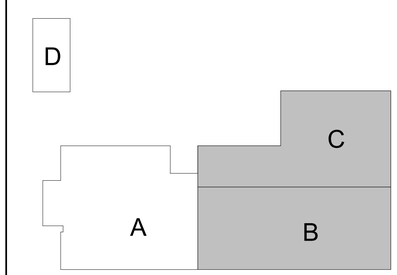

CRSA
649 E. South Temple
Salt Lake City, UT 84102
801.355.5915

MWL
11798 N. Lakeridge Pkwy.
Ashland, VA 23005
804-228-7473

State of Utah
Department of Administrative Services
Division of Facilities Construction & Management
4110 State Office Building
Salt Lake City, Utah 84114
Phone: (801) 538 - 3018
Fax: (801) 538 - 3267

DFCM APPROVAL STAMP

LICENSED PROFESSIONAL ENGINEER
No. 181563
DAVID E. WESEMANN
04-21-2014
STATE OF UTAH

ARCHITECT-ENGINEER STAMP

Unified State Laboratory Module 2

4451 South 2700 West, Taylorsville, UT 84118

DFCM #:	13020300
Project #:	B13-024
DATE: April 21, 2014	ISSUE TYPE: BID SET

MARK	DATE	DESCRIPTION
2	May 20, 2015	ADDENDUM #3

CHECKED BY	D. WESEMANN
DRAWN BY	DLM

SECOND LEVEL POWER PLAN - AREA B

EP102b

VOLUME 2

C:\Users\jrm\Desktop\Revit Local Files\2013\2013\0362Elec Central_jrm.rvt
5/20/2015 5:53:06 PM

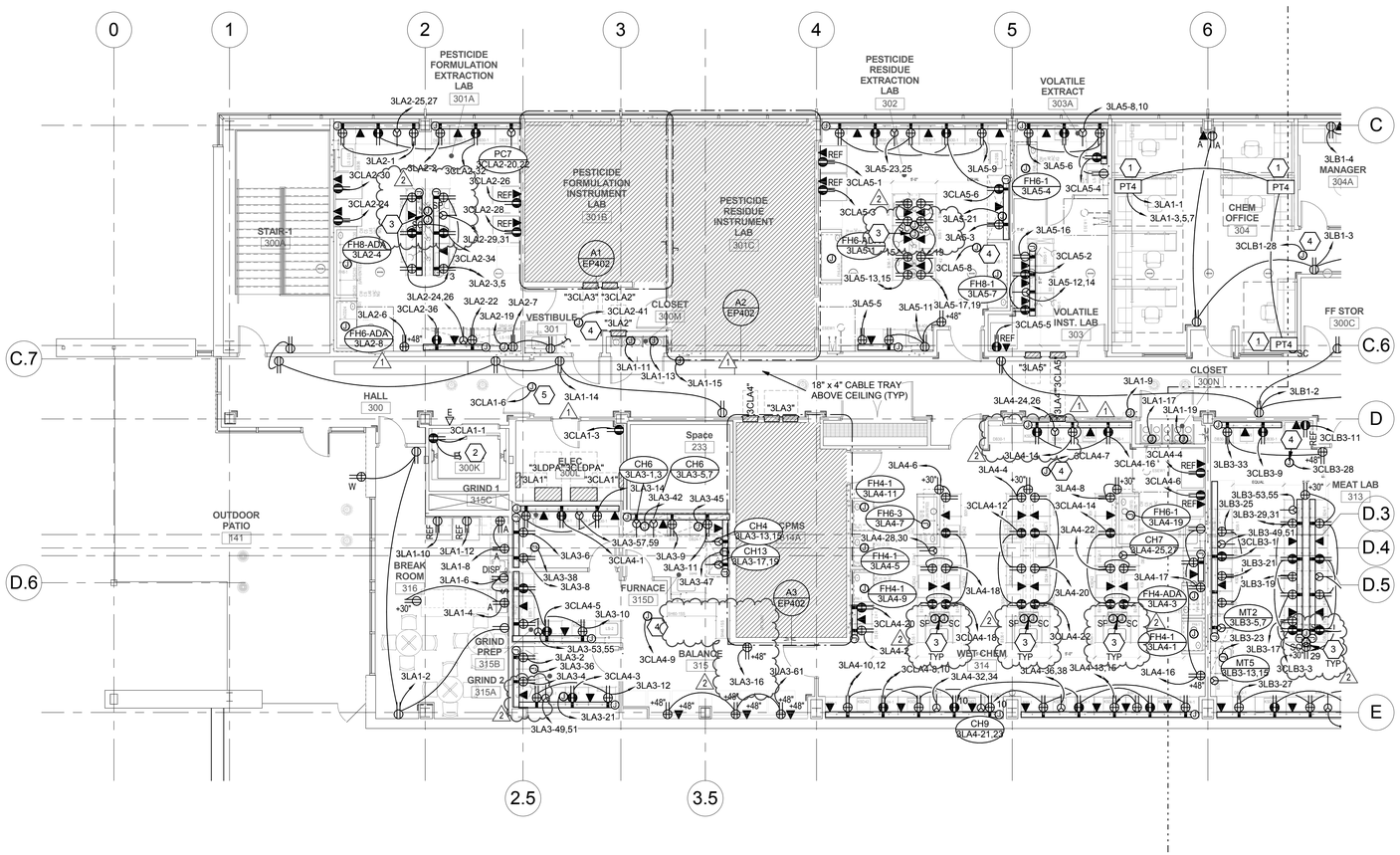

A1 THIRD LEVEL POWER PLAN - AREA A

SCALE: 1/8" = 1'-0"

GENERAL SHEET NOTES

1. LOCATIONS OF MECHANICAL EQUIPMENT SHOWN IS APPROXIMATE. FIELD COORDINATE EXACT LOCATIONS OF EQUIPMENT PRIOR TO ROUGH-IN.
2. SEE FIRE ALARM PLANS (FA) FOR ELECTRICAL CONNECTIONS TO FIRE ALARM EQUIPMENT/DEVICES.
3. PROVIDE WIRING FROM ALL REFRIGERATORS TO BMS SYSTEM TO MONITOR DRY CONTACTS ALARMS IN REFRIGERATOR.
4. MINIMUM BRANCH CIRCUIT CONDUCTOR SIZE FOR 20A, 120V OR 208V CIRCUITS SHALL BE #10 AWG, UNLESS A LARGER SIZE IS INDICATED OR REQUIRED TO MINIMIZE VOLTAGE DROP.
5. CONTRACTOR TO PROVIDE AT TIME OF OWNER MOVE-IN/OCCUPATION OF BUILDING, (20) NEMA PLUG CONVERSION/REVISIONS TO ACCOMMODATE DIFFERENT EQUIPMENT PLUGS. THIS QUANTITY IS A TOTAL FOR THE BUILDING AND NOT PER DRAWING SHEET.

SHEET KEYNOTES

1. PROVIDE ELECTRICAL CONNECTIONS TO SYSTEMS FURNITURE. DESIGN IS BASED ON 4 CIRCUIT/8 WIRE SYSTEM (3 CIRCUITS, SHARED OVERSIZED NEUTRAL AND GROUND, PLUS 1 CIRCUIT WITH DEDICATED NEUTRAL AND GROUND). VERIFY WIRING CONFIGURATION AND FEED POINT WITH SYSTEMS FURNITURE INSTALLER PRIOR TO INSTALLATION. COORDINATE WITH FURNITURE INSTALLER SUCH THAT CIRCUITS ARE UNIFORMLY DISTRIBUTED TO NO MORE THAN 4 WORKSTATIONS PER CIRCUIT AND EACH WORKSTATION ONLY HAVING AVAILABLE IT'S ASSIGNED CIRCUIT. COPIER OR PRINTERS LOCATED IN A GROUP OF WORKSTATIONS SHALL RECEIVE A DEDICATED CIRCUIT.
2. CIRCUIT ELEVATOR HOISTWAY LIGHT TO SAME CIRCUIT AS THE ELEVATOR HOISTWAY RECEPTACLE.
3. FEED CONDUITS FOR LAB BENCH POWER AND DATA CONNECTIONS FROM CEILING THROUGH UMBILICAL SERVICE CHASE. COORDINATE EXACT LOCATION WITH MILLWORK INSTALLER AND LAB EQUIPMENT DRAWINGS.
4. PROVIDE J-BOX FOR MECHANICAL CONTROL CIRCUITS. COORDINATE EXACT LOCATION WITH CONTROL CONTRACTOR PRIOR TO ROUGH-IN.
5. CIRCUIT FOR 120V DOOR POWER SUPPLY. COORDINATE EXACT CONNECTION LOCATION WITH DOOR HARDWARE INSTALLER.

KEY PLAN

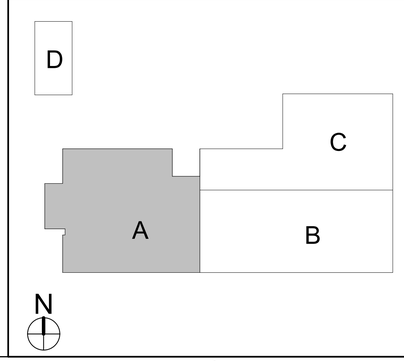

CRSA
649 E. South Temple
Salt Lake City, UT 84102
801.355.5915

MWL
11798 N. Lakeridge Pkwy.
Ashland, VA 23005
804-228-7473

State of Utah
Department of Administrative Services
Division of Facilities Construction & Management
4110 State Office Building
Salt Lake City, Utah 84114
Phone: (801) 538 - 3018
Fax: (801) 538 - 3267

DFCM APPROVAL STAMP

ARCHITECT-ENGINEER STAMP

No. 181563
DAVID E. WESEMANN
04-21-2014
STATE OF UTAH

Unified State Laboratory Module 2

4451 South 2700 West, Taylorsville, UT 84118

DFCM #:	13020300
Project #:	B13-024

DATE:	ISSUE TYPE:
April 21, 2014	BID SET

MARK	DATE	DESCRIPTION
2	May 20, 2015	ADDENDUM #3

CHECKED BY	D. WESEMANN
DRAWN BY	DLM

THIRD LEVEL POWER PLAN - AREA A

EP103a

VOLUME 2

C:\Users\jpm\Desktop\Revit Local Files\2013\2013\3582Elec Central_jpm.rvt
5/20/2015 5:53:21 PM

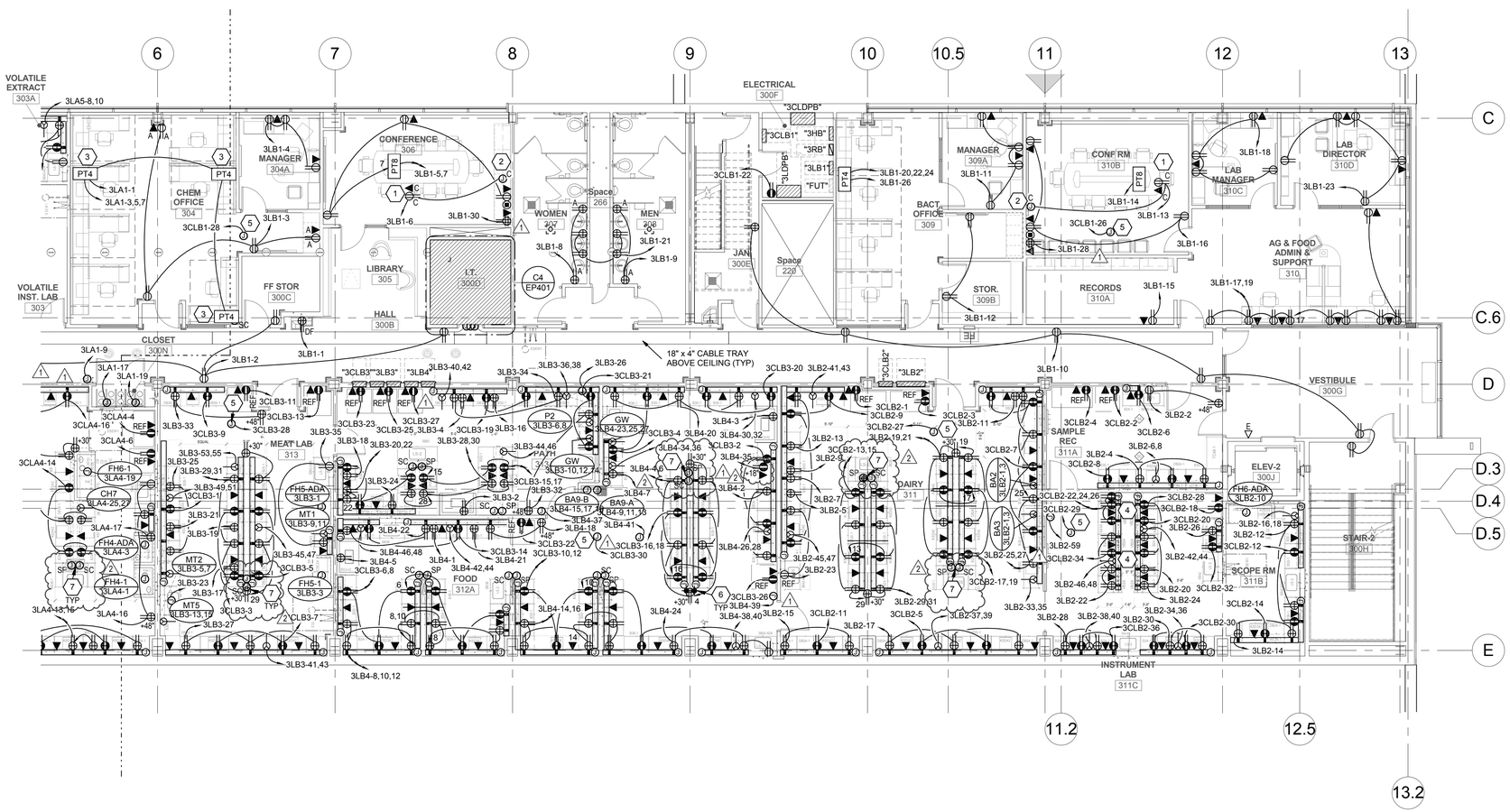

A1 THIRD LEVEL POWER PLAN - AREA B

SCALE: 1/8" = 1'-0"

GENERAL SHEET NOTES

1. LOCATIONS OF MECHANICAL EQUIPMENT SHOWN IS APPROXIMATE. FIELD COORDINATE EXACT LOCATIONS OF EQUIPMENT PRIOR TO ROUGH-IN.
2. SEE FIRE ALARM PLANS (FA) FOR ELECTRICAL CONNECTIONS TO FIRE ALARM EQUIPMENT/DEVICES.
3. PROVIDE WIRING FROM ALL REFRIGERATORS TO BMS SYSTEM TO MONITOR DRY CONTACTS ALARMS IN REFRIGERATOR.
4. MINIMUM BRANCH CIRCUIT CONDUCTOR SIZE FOR 20A, 120V OR 208V CIRCUITS SHALL BE #10 AWG, UNLESS A LARGER SIZE IS INDICATED OR REQUIRED TO MINIMIZE VOLTAGE DROP.
5. CONTRACTOR TO PROVIDE AT TIME OF OWNER MOVE-IN/OCCUPATION OF BUILDING, (20) NEMA PLUG CONVERSION/REVISIONS TO ACCOMMODATE DIFFERENT EQUIPMENT PLUGS. THIS QUANTITY IS A TOTAL FOR THE BUILDING AND NOT PER DRAWING SHEET.

SHEET KEYNOTES

1. POWER AND DATA FOR CEILING MOUNTED PROJECTOR. PROVIDE ALL ELECTRICAL AND CONTROL CONDUIT AND WIRING PER MANUFACTURER'S INSTRUCTIONS. INSTALL CONTROL SWITCH IN LOCATION APPROVED BY ARCHITECT. ALSO COORDINATE WITH AV INSTALLER AND INTERFACE WITH AV CONTROLS.
2. POWER FOR MOTORIZED SCREEN. PROVIDE ALL ELECTRICAL & CONTROL CONDUIT AND WIRING PER MANUFACTURER'S WRITTEN INSTRUCTIONS. INSTALL CONTROL SWITCH IN LOCATION APPROVED BY ARCHITECT. ALSO COORDINATE WITH AV INSTALLER AND INTERFACE WITH AV CONTROLS.
3. PROVIDE ELECTRICAL CONNECTIONS TO SYSTEMS FURNITURE. DESIGN IS BASED ON 4 CIRCUIT/8 WIRE SYSTEM (3 CIRCUITS, SHARED OVERSIZED NEUTRAL AND GROUND, PLUS 1 CIRCUIT WITH DEDICATED NEUTRAL AND GROUND). VERIFY WIRING CONFIGURATION AND FEED POINT WITH SYSTEMS FURNITURE INSTALLER PRIOR TO INSTALLATION. COORDINATE WITH FURNITURE INSTALLER SUCH THAT CIRCUITS ARE UNIFORMLY DISTRIBUTED TO NO MORE THAN 4 WORKSTATIONS PER CIRCUIT AND EACH WORKSTATION ONLY HAVING AVAILABLE IT'S ASSIGNED CIRCUIT. COPIER OR PRINTERS LOCATED IN A GROUP OF WORKSTATIONS SHALL RECEIVE A DEDICATED CIRCUIT.
4. COORDINATE PLACEMENT OF THIS RACEWAY AND ASSOCIATED ELECTRICAL RECEPTACLES AND CONNECTIONS WITH LAB EQUIPMENT INSTALLER, TO BE PLACED UNDERNEATH BACKSIDE OF LAB FURNITURE.
5. PROVIDE J-BOX FOR MECHANICAL CONTROL CIRCUITS. COORDINATE EXACT LOCATION WITH CONTROL CONTRACTOR PRIOR TO ROUGH-IN.
6. 1" CND STUBBED THROUGH SLAB TO NORMAL AND EMERGENCY POWER PANELS FEEDING THIS ROOM. 1.25" CND STUBBED THROUGH SLAB TO NEAREST I.T./TELECOMM ROOM ON THIS FLOOR.
7. FEED CONDUITS FOR LAB BENCH POWER AND DATA CONNECTIONS FROM CEILING THROUGH UMBILICAL SERVICE CHASE. COORDINATE EXACT LOCATION WITH MILLWORK INSTALLER AND LAB EQUIPMENT DRAWINGS.

KEY PLAN

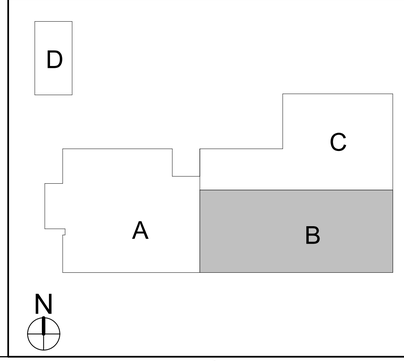

CRSA
649 E. South Temple
Salt Lake City, UT 84102
801.355.5915

MWL
11798 N. Lakeridge Pkwy.
Ashland, VA 23005
804-228-7473

State of Utah
Department of Administrative Services
Division of Facilities Construction & Management
4110 State Office Building
Salt Lake City, Utah 84114
Phone: (801) 538 - 3018
Fax: (801) 538 - 3267

DFCM APPROVAL STAMP

LICENSED PROFESSIONAL ENGINEER No. 181563 DAVID E. WESEMANN 04-21-2014 STATE OF UTAH

ARCHITECT-ENGINEER STAMP

Unified State Laboratory Module 2

4451 South 2700 West, Taylorsville, UT 84118

DFCM #:	13020300
Project #:	B13-024
DATE:	ISSUE TYPE:
April 21, 2014	BID SET

MARK	DATE	DESCRIPTION
2	May 20, 2015	ADDENDUM #3

CHECKED BY	D. WESEMANN
DRAWN BY	DLM

THIRD LEVEL POWER PLAN - AREA B

EP103b

VOLUME 2

C:\Users\jpm\Desktop\Revit Local Files\2013\20130362Elec Central_jpm.rvt
5/20/2015 5:53:29 PM

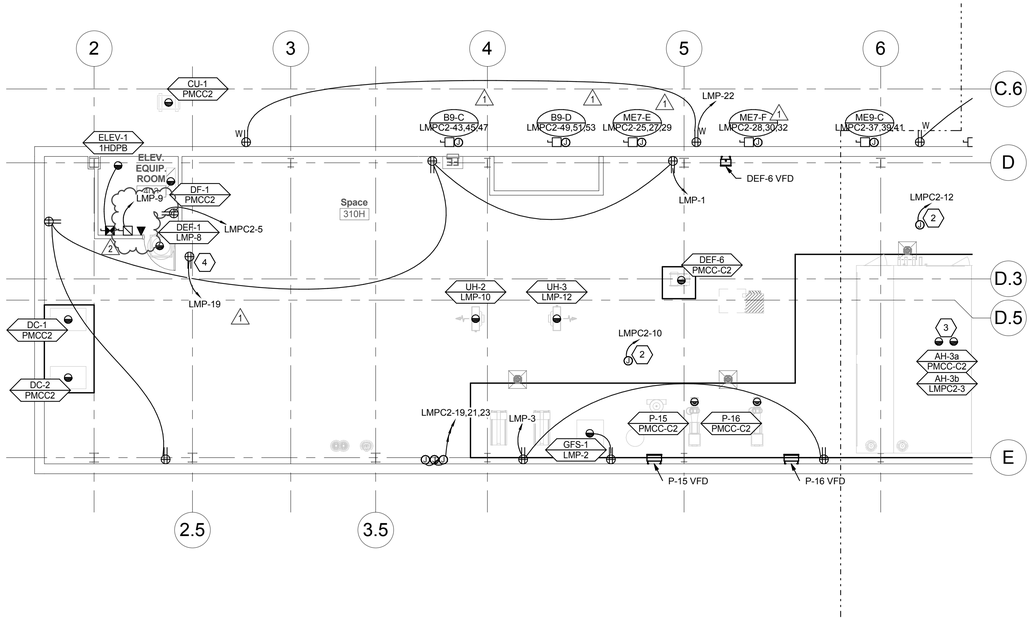

C1 PENTHOUSE LEVEL POWER PLAN - AREA A

SCALE: 1/8" = 1'-0"

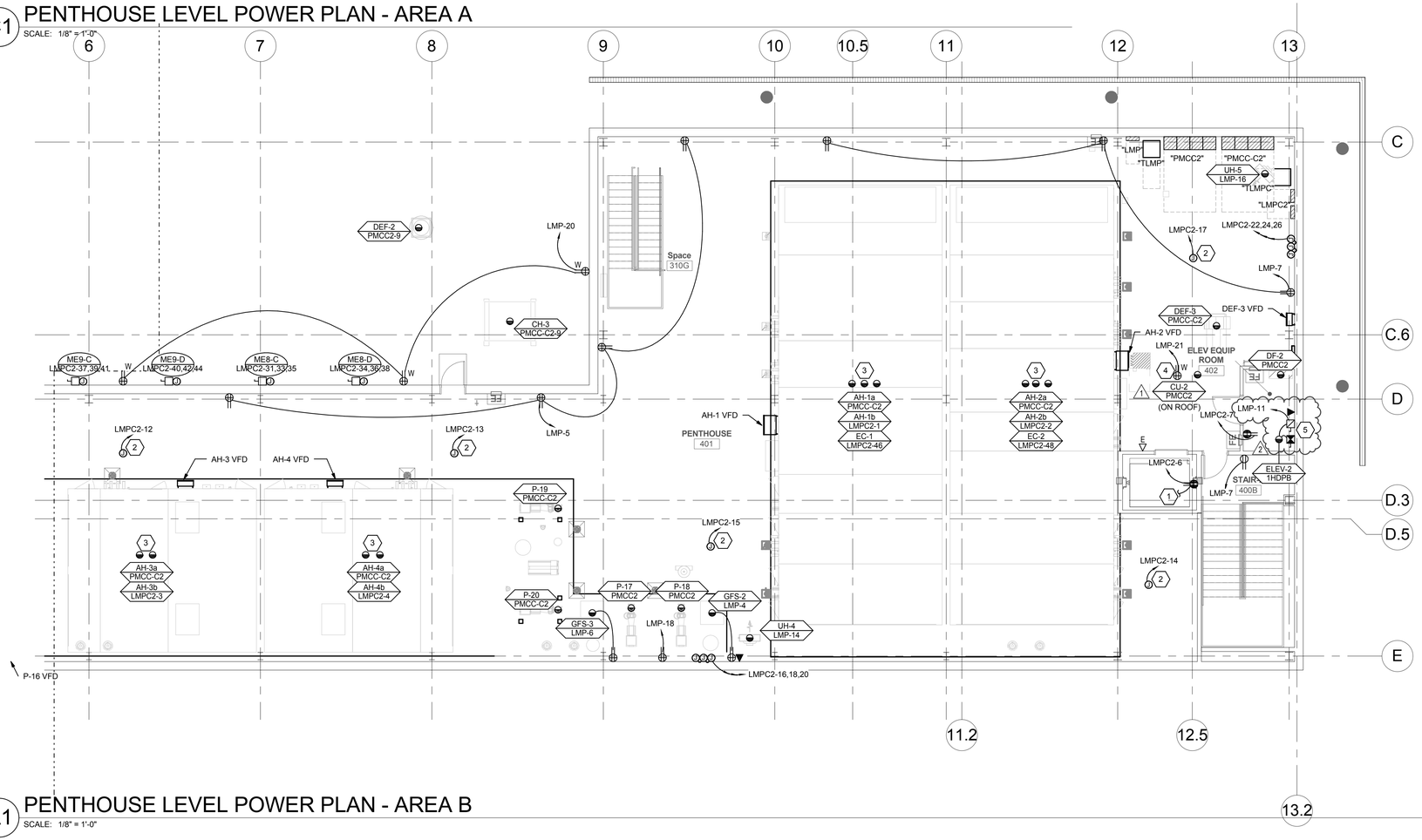

A1 PENTHOUSE LEVEL POWER PLAN - AREA B

SCALE: 1/8" = 1'-0"

GENERAL SHEET NOTES

1. LOCATIONS OF MECHANICAL EQUIPMENT SHOWN IS APPROXIMATE. FIELD COORDINATE EXACT LOCATIONS OF EQUIPMENT PRIOR TO ROUGH-IN.
2. SEE FIRE ALARM PLANS (FA) FOR ELECTRICAL CONNECTIONS TO FIRE ALARM EQUIPMENT/DEVICES.
3. PROVIDE WIRING FROM ALL REFRIGERATORS TO BMS SYSTEM TO MONITOR DRY CONTACTS ALARMS IN REFRIGERATOR.
4. MINIMUM BRANCH CIRCUIT CONDUCTOR SIZE FOR 20A, 120V OR 208V CIRCUITS SHALL BE #10 AWG, UNLESS A LARGER SIZE IS INDICATED OR REQUIRED TO MINIMIZE VOLTAGE DROP.
5. CONTRACTOR TO PROVIDE AT TIME OF OWNER MOVE-IN/OCCUPATION OF BUILDING, (20) NEMA PLUG CONVERSION/REVISIONS TO ACCOMMODATE DIFFERENT EQUIPMENT PLUGS. THIS QUANTITY IS A TOTAL FOR THE BUILDING AND NOT PER DRAWING SHEET.

SHEET KEYNOTES

1. CIRCUIT ELEVATOR HOISTWAY LIGHT TO SAME CIRCUIT AS THE ELEVATOR HOISTWAY RECEPTACLE.
2. PROVIDE J-BOX FOR MECHANICAL CONTROL CIRCUITS. COORDINATE EXACT LOCATION WITH CONTROL CONTRACTOR PRIOR TO ROUGH-IN.
3. COORDINATE EXACT LOCATIONS AND REQUIREMENTS OF VARIOUS ELECTRICAL CONNECTIONS FOR AIR HANDLER UNIT WITH HVAC CONTRACTOR.
4. ROOF MOUNTED OUTLET. PROVIDE INDEPENDENT UNISTRUT SUPPORT OR GRC CONDUIT FOR SUPPORT AND MOUNTING OF OUTLET.
5. PROVIDE ELEVATOR DISCONNECT WITH SHUNT TRIP AND AUXILIARY CONTACT. INTERLOCK SHUNT TRIP WITH FIRE ALARM SYSTEM HEAT DETECTORS. INTERLOCK AUSILIARY CONTACT WITH ELEVATOR CONTROLLER TO SIGNAL CONTROLLER THAT ELEVATOR BATTERY SYSTEM SHOULD BE DISABLED.

KEY PLAN

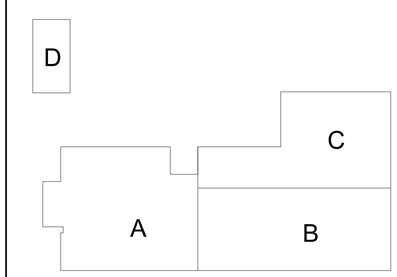

N

CRSA
649 E. South Temple
Salt Lake City, UT 84102
801.355.5915

MWL
11798 N. Lakeridge Pkwy.
Ashland, VA 23005
804-228-7473

State of Utah
Department of Administrative Services
Division of Facilities Construction & Management
4110 State Office Building
Salt Lake City, Utah 84114
Phone: (801) 538 - 3018
Fax: (801) 538 - 3267

DFCM APPROVAL STAMP

LICENSED PROFESSIONAL ENGINEER
No. 181563
DAVID E. WESEMANN
04-21-2014
STATE OF UTAH

ARCHITECT-ENGINEER STAMP

Unified State Laboratory Module 2

4451 South 2700 West, Taylorsville, UT 84118

DFCM #:	13020300
Project #:	B13-024

DATE:	ISSUE TYPE:
April 21, 2014	BID SET

MARK	DATE	DESCRIPTION
2	May 20, 2015	ADDENDUM #3

CHECKED BY	D. WESEMANN
DRAWN BY	DLM

PENTHOUSE LEVEL POWER PLAN

EP104

VOLUME 2

C:\Users\jgrm\Desktop\Revit Local Files\2013\2013036\Elec Central_jgrm.rvt
5/20/2015 5:53:41 PM

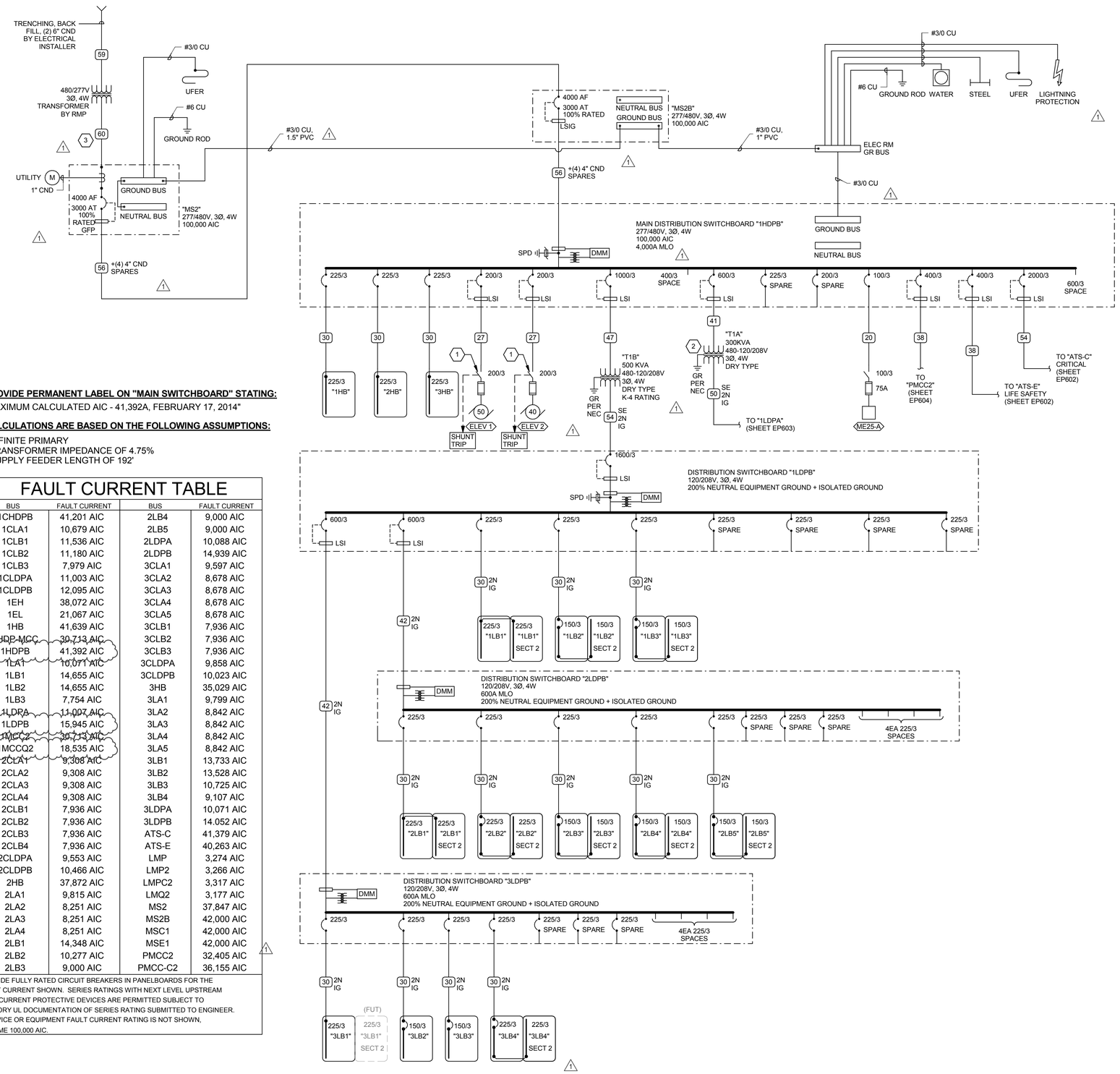

PROVIDE PERMANENT LABEL ON "MAIN SWITCHBOARD" STATING:

"MAXIMUM CALCULATED AIC - 41,392A, FEBRUARY 17, 2014"

CALCULATIONS ARE BASED ON THE FOLLOWING ASSUMPTIONS:

- INFINITE PRIMARY
- TRANSFORMER IMPEDANCE OF 4.75%
- SUPPLY FEEDER LENGTH OF 192'

FAULT CURRENT TABLE

BUS	FAULT CURRENT	BUS	FAULT CURRENT
1CHDPB	41,201 AIC	2LB4	9,000 AIC
1CLA1	10,679 AIC	2LB5	9,000 AIC
1CLB1	11,536 AIC	2LDPA	10,088 AIC
1CLB2	11,180 AIC	2LDPB	14,939 AIC
1CLB3	7,979 AIC	3CLA1	9,597 AIC
1CLDPA	11,003 AIC	3CLA2	8,678 AIC
1CLDPB	12,095 AIC	3CLA3	8,678 AIC
1EH	38,072 AIC	3CLA4	8,678 AIC
1EL	21,067 AIC	3CLA5	8,678 AIC
1HB	41,639 AIC	3CLB1	7,936 AIC
1HDP-MCC	30,713 AIC	3CLB2	7,936 AIC
1HDPB	41,392 AIC	3CLB3	7,936 AIC
1LA1	10,071 AIC	3CLDPA	9,858 AIC
1LB1	14,655 AIC	3CLDPB	10,023 AIC
1LB2	14,655 AIC	3HB	35,029 AIC
1LB3	7,754 AIC	3LA1	9,799 AIC
1LDPA	11,007 AIC	3LA2	8,842 AIC
1LDPB	15,945 AIC	3LA3	8,842 AIC
1MCC2	30,713 AIC	3LA4	8,842 AIC
1MCCQ2	18,535 AIC	3LA5	8,842 AIC
2CLA1	9,308 AIC	3LB1	13,733 AIC
2CLA2	9,308 AIC	3LB2	13,528 AIC
2CLA3	9,308 AIC	3LB3	10,725 AIC
2CLA4	9,308 AIC	3LB4	9,107 AIC
2CLB1	7,936 AIC	3LDPA	10,071 AIC
2CLB2	7,936 AIC	3LDPB	14.052 AIC
2CLB3	7,936 AIC	ATS-C	41,379 AIC
2CLB4	7,936 AIC	ATS-E	40,263 AIC
2CLDPA	9,553 AIC	LMP	3,274 AIC
2CLDPB	10,466 AIC	LMP2	3,266 AIC
2HB	37,872 AIC	LMPC2	3,317 AIC
2LA1	9,815 AIC	LMQ2	3,177 AIC
2LA2	8,251 AIC	MS2	37,847 AIC
2LA3	8,251 AIC	MS2B	42,000 AIC
2LA4	8,251 AIC	MSC1	42,000 AIC
2LB1	14,348 AIC	MSE1	42,000 AIC
2LB2	10,277 AIC	PMCC2	32,405 AIC
2LB3	9,000 AIC	PMCC-C2	36,155 AIC

PROVIDE FULLY RATED CIRCUIT BREAKERS IN PANELBOARDS FOR THE FAULT CURRENT SHOWN. SERIES RATINGS WITH NEXT LEVEL UPSTREAM OVERCURRENT PROTECTIVE DEVICES ARE PERMITTED SUBJECT TO FACTORY UL DOCUMENTATION OF SERIES RATING SUBMITTED TO ENGINEER. IF DEVICE OR EQUIPMENT FAULT CURRENT RATING IS NOT SHOWN, ASSUME 100,000 AIC.

A1 POWER ONE-LINE DIAGRAM - MODULE 2 (a)

SCALE: NTS

GENERAL SHEET NOTES

1. PROVIDE NEMA 3R ENCLOSURES FOR EQUIPMENT LOCATED OUTDOORS. REFER TO PLANS FOR EQUIPMENT LOCATIONS.
2. REFER TO PLANS FOR CONSTRAINTS ON PHYSICAL DIMENSIONS AND CLEARANCE REQUIREMENTS OF EQUIPMENT. PROVIDE EQUIPMENT DIMENSIONS THAT FALL WITHIN THE CONSTRAINTS OF EACH SPECIFIC LOCATION.
3. ALL EQUIPMENT SHALL BE CONSTRUCTED AND BRACED FOR THE SEISMIC CONDITIONS OF THE PROJECT. REFER TO SPECIFICATIONS SECTION 16071 FOR REQUIREMENTS.
4. ALL 120/208V PANELBOARDS SHALL BE PROVIDED WITH 200% NEUTRAL CAPACITY AND AN ISOLATED GROUND BUS IN ADDITION TO THE EQUIPMENT GROUNDING BUS.
5. PROVIDE PERFORMANCE TESTING FOR GROUND-FAULT PROTECTION SYSTEMS ON SITE WITH A WRITTEN RECORD OF THIS TEST SUBMITTED TO THE AUTHORITY HAVING JURISDICTION PER 2011 NEC 230.95(C).

SHEET KEYNOTES

1. PROVIDE SHUNT TRIP FUSIBLE SWITCH WITH FUSE SIZE BASED ON MANUFACTURER'S WRITTEN INSTRUCTIONS AND ACTUAL MOTOR NAMEPLATE.
2. RELOCATE/REUSE EXISTING 300 KVA TRANSFORMER FROM A PREVIOUS PROJECT. RELABEL TRANSFORMER AS "T1A". SEE A2/EP101D.
3. VERIFY CONDUIT REQUIREMENTS WITH RMP PRIOR TO INSTALLATION.

CONDUCTOR AND CONDUIT "CC" SCHEDULE

SCHEDULE NUMBER
SUBSCRIPT (NOTE 5)
(E.G.) 5 IG

SYM	AMP	CONDUIT SIZE	CONDUCTOR (NOTE 1) QTY	SIZE	G	IG	SE	NOTES
1	20	.75	2	12	12	12	8	2
2	20	.75	3	12	12	12	8	2,3
3	20	.75	4	12	12	12	8	2,3
4	30	.75	2	10	10	10	8	2
5	30	.75	3	10	10	10	8	2
6	30	.75	4	10	10	10	8	2
7	40	1	2	8	10	8	6	2
8	40	1	3	8	10	8	6	2
9	40	1	4	8	10	8	6	2
10	55	1	2	6	10	8	4	2
11	55	1	3	6	10	8	4	2
12	55	1.25	4	6	10	8	4	2
13	70	1	2	4	8	4	2	2
14	70	1.25	3	4	8	4	2	2
15	70	1.25	4	4	8	4	2	2
16	85	1.25	2	3	8	3	2	2
17	85	1.25	3	3	8	3	2	2
18	85	1.25	4	3	8	3	2	2
19	95	1.25	3	2	8	2	2	2
20	95	1.50	4	2	8	2	2	2
21	130	1.50	3	1	6	2	2	2
22	130	1.50	4	1	6	2	2	2
23	150	2	3	1/0	6	2	1/0	2
24	150	2	4	1/0	6	2	1/0	2
25	175	2	3	2/0	6	2	2/0	2
26	175	2	4	2/0	6	2	2/0	2
27	200	2	3	3/0	6	2	2/0	2
28	200	2.50	4	3/0	6	2	2/0	2
29	230	2.50	3	4/0	4	2	2/0	2
30	230	2.50	4	4/0	4	2	2/0	2
31	255	2.50	3	250	4	1	2/0	2
32	255	2.50	4	250	4	1	2/0	2
33	310	3	3	350	3	1/0	3/0	2
34	310	3	4	350	3	1/0	3/0	2
35	380	3.50	3	500	3	3/0	3/0	2
36	380	4	4	500	3	3/0	3/0	2
37	400	2 EA 2	3	3/0	3	3/0	3/0	2
38	400	2 EA 2.50	4	3/0	3	3/0	3/0	2
39	510	2 EA 2.50	3	250	1	4/0	3/0	2
40	510	2 EA 3	4	250	1	4/0	3/0	2
41	620	2 EA 3	3	350	1/0	4/0	3/0	2,4
42	620	2 EA 3.50	4	350	1/0	4/0	3/0	2,4
43	780	2 EA 3.50	3	500	1/0	4/0	3/0	2,4
44	780	2 EA 4	4	500	1/0	4/0	3/0	2,4
45	855	3 EA 3	3	300	2/0	4/0	3/0	2,4
46	855	3 EA 3	4	300	2/0	4/0	3/0	2,4
47	1000	3 EA 3.50	3	400	2/0	4/0	3/0	4
48	1000	3 EA 3.50	4	400	2/0	4/0	3/0	4
49	1140	3 EA 4	3	500	3/0	4/0	3/0	4
50	1140	3 EA 4	4	500	3/0	4/0	3/0	4
51	1240	4 EA 3	3	350	3/0	4/0	3/0	4
52	1240	4 EA 3	4	350	3/0	4/0	3/0	4
53	1675	5 EA 4	4	400	4/0	4/0	4/0	4
54	2010	6 EA 4	4	400	250	250	250	4
55	2660	7 EA 4	4	500	350	350	350	4
56	3040	8 EA 4	4	500	500	500	500	4
57	4180	11 EA 4	4	500	500	500	500	4
58		5 EA 4						6
59		2 EA 6						6
60		12 EA 6						6

CONDUIT AND CONDUCTOR SCHEDULE NOTES

1. CONDUCTORS SHOWN ARE SHOWN FOR EACH CONDUIT WITH MODIFICATIONS AS NOTED IN NOTE 5. ALL CONDUCTORS SHOWN ARE THWN UNLESS OTHERWISE NOTED.
2. PROVIDE EQUIPMENT GROUND CONDUCTORS PER TABLE 250-122 WHEN CIRCUIT BREAKERS ARE SIZED GREATER THAN AMPERE RATING SHOWN IN TABLE.
3. PROVIDE #10 NEUTRALS FOR MULTIWIRE BRANCH CIRCUITS SERVING COMPUTERS.
4. GROUND (G) CONDUCTOR MAY BE DELETED ON SERVICE ENTRANCE CONDUCTORS.
5. SYMBOL SUBSCRIPTS:

   "IG": INCLUDE IG (INSULATED/ISOLATED GROUND CONDUCTOR) SCHEDULED ALONG WITH THE GROUND OF EQUIPMENT GROUND CONDUCTOR.

   "SE": SUBSTITUTE "SE" CONDUCTOR FOR "G" CONDUCTOR SHOWN, WHICH IS SIZED FOR THE GROUNDING OF THE SECONDARY OF THE SEPARATELY DERIVED SYSTEM.

   "2N": INCLUDE TWO NEUTRAL CONDUCTORS, SIZED AS SCHEDULED FOR PHASED AND NEUTRAL CONDUCTORS.

6. RACEWAY ONLY. CONDUCTORS PROVIDED BY UTILITY.

CRSA
649 E. South Temple
Salt Lake City, UT 84102
801.355.5915

MWL
11798 N. Lakeridge Pkwy.
Ashland, VA 23005
804-228-7473

State of Utah
Department of Administrative Services
Division of Facilities Construction & Management
4110 State Office Building
Salt Lake City, Utah 84114
Phone: (801) 538 - 3018
Fax: (801) 538 - 3267

DFCM APPROVAL STAMP

ARCHITECT-ENGINEER STAMP

No. 181563 DAVID E. WESEMANN 04-21-2014 STATE OF UTAH

Unified State Laboratory Module 2

4451 South 2700 West, Taylorsville, UT 84118

DFCM #: 13020300

Project #: B13-024

DATE:	ISSUE TYPE:
April 21, 2014	BID SET

MARK	DATE	DESCRIPTION
2	May 20, 2015	ADDENDUM #3

CHECKED BY: D. WESEMANN

DRAWN BY: DLM

POWER ONE-LINE DIAGRAM - MODULE 2 (a)

EP601

VOLUME 2

C:\Users\gsmi\Desktop\Revit Local Files\2013\20130626Elec Central_jsm.rvt
5/20/2015 5:54:24 PM

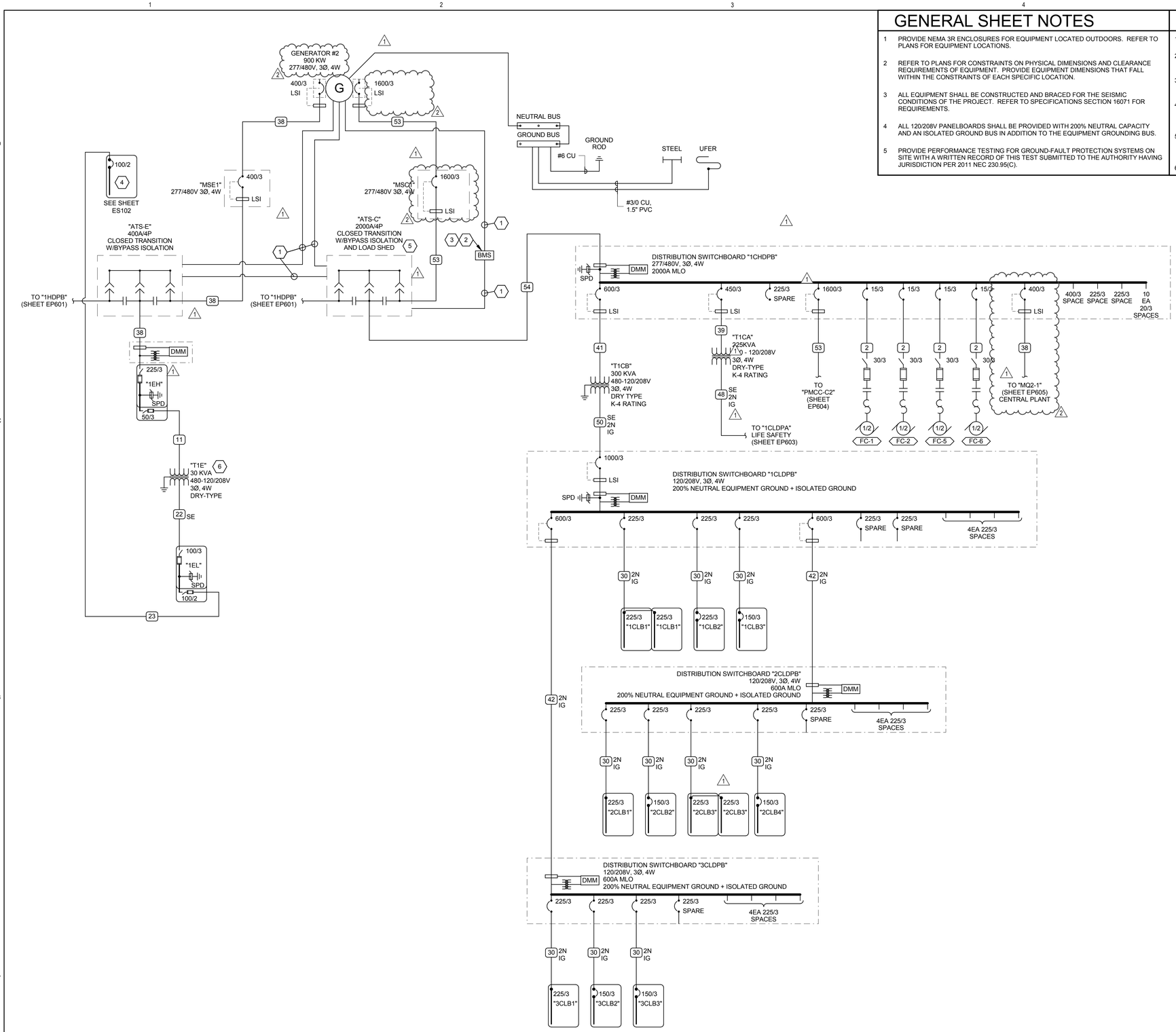

A1 POWER ONE-LINE DIAGRAM - MODULE 2 (b)

SCALE: NTS

GENERAL SHEET NOTES

1. PROVIDE NEMA 3R ENCLOSURES FOR EQUIPMENT LOCATED OUTDOORS. REFER TO PLANS FOR EQUIPMENT LOCATIONS.
2. REFER TO PLANS FOR CONSTRAINTS ON PHYSICAL DIMENSIONS AND CLEARANCE REQUIREMENTS OF EQUIPMENT. PROVIDE EQUIPMENT DIMENSIONS THAT FALL WITHIN THE CONSTRAINTS OF EACH SPECIFIC LOCATION.
3. ALL EQUIPMENT SHALL BE CONSTRUCTED AND BRACED FOR THE SEISMIC CONDITIONS OF THE PROJECT. REFER TO SPECIFICATIONS SECTION 16071 FOR REQUIREMENTS.
4. ALL 120/208V PANELBOARDS SHALL BE PROVIDED WITH 200% NEUTRAL CAPACITY AND AN ISOLATED GROUND BUS IN ADDITION TO THE EQUIPMENT GROUNDING BUS.
5. PROVIDE PERFORMANCE TESTING FOR GROUND-FAULT PROTECTION SYSTEMS ON SITE WITH A WRITTEN RECORD OF THIS TEST SUBMITTED TO THE AUTHORITY HAVING JURISDICTION PER 2011 NEC 230.95(C).

SHEET KEYNOTES

1. 1.5" CND WITH WIRING PER MANUFACTURERS WRITTEN INSTRUCTIONS.
2. COORDINATE CONNECTION AND MONITORING OF GENERATOR AND EACH TRANSFER SWITCH WITH BMS INSTALLER.
3. WHEN CONNECTED TO GENERATOR, BMS SHALL INITIATE A LOAD-SHED SEQUENCE SUCH THAT LIMITS TOTAL FAN LOAD TO 50% OF LESS.
4. GENERATOR ENCLOSURE LOAD CENTER, PREWIRED TO GENERATOR AUXILIARY LOADS SHALL BE PROVIDED WITH GENERATOR SET: 120/208V 1-PHASE, 3-WIRE. APPROXIMATE TOTAL LOAD: 15 KW.
5. PROGRAM ATS-C TO TRANSFER TO GENERATOR WITH A 20 SECOND DELAY AFTER ATS-E TRANSFERS, AND TO LOAD SHED IF GENERATOR LOSES FREQUENCY FOR A PRE-DEFINED PERIOD OF TIME, OR IS IN OVERTEMP ALARM.
6. SUPPORT AND HANG TRANSFORMER "T1E" FROM BUILDING STRUCTURE.

CONDUCTOR AND CONDUIT "CC" SCHEDULE

SCHEDULE NUMBER
SUBSCRIPT (NOTE 5)
(E.G.) 5 IG

SYM	AMP	CONDUIT SIZE	CONDUCTOR (NOTE 1) QTY	SIZE	G	IG	SE	NOTES
1	20	.75	2	12	12	12	8	2
2	20	.75	3	12	12	12	8	2,3
3	20	.75	4	12	12	12	8	2,3
4	30	.75	2	10	10	10	8	2
5	30	.75	3	10	10	10	8	2
6	30	.75	4	10	10	10	8	2
7	40	1	2	8	10	8	6	2
8	40	1	3	8	10	8	6	2
9	40	1	4	8	10	8	6	2
10	55	1	2	6	10	8	4	2
11	55	1	3	6	10	8	4	2
12	55	1.25	4	6	10	8	4	2
13	70	1	2	4	8	4	2	2
14	70	1.25	3	4	8	4	2	2
15	70	1.25	4	4	8	4	2	2
16	85	1.25	2	3	8	3	2	2
17	85	1.25	3	3	8	3	2	2
18	85	1.25	4	3	8	3	2	2
19	95	1.25	3	2	8	2	2	2
20	95	1.50	4	2	8	2	2	2
21	130	1.50	3	1	6	2	2	2
22	130	1.50	4	1	6	2	2	2
23	150	2	3	1/0	6	2	1/0	2
24	150	2	4	1/0	6	2	1/0	2
25	175	2	3	2/0	6	2	2/0	2
26	175	2	4	2/0	6	2	2/0	2
27	200	2	3	3/0	6	2	2/0	2
28	200	2.50	4	3/0	6	2	2/0	2
29	230	2.50	3	4/0	4	2	2/0	2
30	230	2.50	4	4/0	4	2	2/0	2
31	255	2.50	3	250	4	1	2/0	2
32	255	2.50	4	250	4	1	2/0	2
33	310	3	3	350	3	1/0	3/0	2
34	310	3	4	350	3	1/0	3/0	2
35	380	3.50	3	500	3	3/0	3/0	2
36	380	4	4	500	3	3/0	3/0	2
37	400	2 EA 2	3	3/0	3	3/0	3/0	2
38	400	2 EA 2.50	4	3/0	3	3/0	3/0	2
39	510	2 EA 2.50	3	250	1	4/0	3/0	2
40	510	2 EA 3	4	250	1	4/0	3/0	2
41	620	2 EA 3	3	350	1/0	4/0	3/0	2,4
42	620	2 EA 3.50	4	350	1/0	4/0	3/0	2,4
43	780	2 EA 3.50	3	500	1/0	4/0	3/0	2,4
44	780	2 EA 4	4	500	1/0	4/0	3/0	2,4
45	855	3 EA 3	3	300	2/0	4/0	3/0	2,4
46	855	3 EA 3	4	300	2/0	4/0	3/0	2,4
47	1000	3 EA 3.50	3	400	2/0	4/0	3/0	4
48	1000	3 EA 3.50	4	400	2/0	4/0	3/0	4
49	1140	3 EA 4	3	500	3/0	4/0	3/0	4
50	1140	3 EA 4	4	500	3/0	4/0	3/0	4
51	1240	4 EA 3	3	350	3/0	4/0	3/0	4
52	1240	4 EA 3	4	350	3/0	4/0	3/0	4
53	1675	5 EA 4	4	400	4/0	4/0	4/0	4
54	2010	6 EA 4	4	400	250	250	250	4
55	2660	7 EA 4	4	500	350	350	350	4
56	3040	8 EA 4	4	500	500	500	500	4
57	4180	11 EA 4	4	500	500	500	500	4
58		5 EA 4						6
59		2 EA 6						6
60		12 EA 6						6

CONDUIT AND CONDUCTOR SCHEDULE NOTES

1. CONDUCTORS SHOWN ARE SHOWN FOR EACH CONDUIT WITH MODIFICATIONS AS NOTED IN NOTE 5. ALL CONDUCTORS SHOWN ARE THWN UNLESS OTHERWISE NOTED.
2. PROVIDE EQUIPMENT GROUND CONDUCTORS PER TABLE 250-122 WHEN CIRCUIT BREAKERS ARE SIZED GREATER THAN AMPERE RATING SHOWN IN TABLE.
3. PROVIDE #10 NEUTRALS FOR MULTIWIRE BRANCH CIRCUITS SERVING COMPUTERS.
4. GROUND (G) CONDUCTOR MAY BE DELETED ON SERVICE ENTRANCE CONDUCTORS.
5. SYMBOL SUBSCRIPTS:

   "IG": INCLUDE IG (INSULATED/ISOLATED GROUND CONDUCTOR) SCHEDULED ALONG WITH THE GROUND OF EQUIPMENT GROUND CONDUCTOR.

   "SE": SUBSTITUTE "SE" CONDUCTOR FOR "G" CONDUCTOR SHOWN, WHICH IS SIZED FOR THE GROUNDING OF THE SECONDARY OF THE SEPARATELY DERIVED SYSTEM.

   "2N": INCLUDE TWO NEUTRAL CONDUCTORS, SIZED AS SCHEDULED FOR PHASED AND NEUTRAL CONDUCTORS.
6. RACEWAY ONLY. CONDUCTORS PROVIDED BY UTILITY.

CRSA
649 E. South Temple
Salt Lake City, UT 84102
801.355.5915

MWL
11798 N. Lakeridge Pkwy.
Ashland, VA 23005
804-228-7473

State of Utah
Department of Administrative Services
Division of Facilities Construction & Management
4110 State Office Building
Salt Lake City, Utah 84114
Phone: (801) 538 - 3018
Fax: (801) 538 - 3267

DFCM APPROVAL STAMP

PROFESSIONAL ENGINEER
LICENSED
No. 181563
DAVID E. WESEMANN
04-21-2014
STATE OF UTAH

ARCHITECT-ENGINEER STAMP

Unified State Laboratory Module 2

4451 South 2700 West, Taylorsville, UT 84118

DFCM #: 13020300

Project #: B13-024

DATE:	ISSUE TYPE:
April 21, 2014	BID SET

MARK	DATE	DESCRIPTION
2	May 20, 2015	ADDENDUM #3

CHECKED BY	D. WESEMANN
DRAWN BY	DLM

POWER ONE-LINE DIAGRAM - MODULE 2 (b)

EP602

VOLUME 2

C:\Users\jpm\Desktop\Revit Local Files\2013\20130362\Elec Central_jpm.rvt
5/20/2015 5:54:30 PM

GENERAL SHEET NOTES

1. PROVIDE NEMA 3R ENCLOSURES FOR EQUIPMENT LOCATED OUTDOORS. REFER TO PLANS FOR EQUIPMENT LOCATIONS.
2. REFER TO PLANS FOR CONSTRAINTS ON PHYSICAL DIMENSIONS AND CLEARANCE REQUIREMENTS OF EQUIPMENT. PROVIDE EQUIPMENT DIMENSIONS THAT FALL WITHIN THE CONSTRAINTS OF EACH SPECIFIC LOCATION.
3. ALL EQUIPMENT SHALL BE CONSTRUCTED AND BRACED FOR THE SEISMIC CONDITIONS OF THE PROJECT. REFER TO SPECIFICATIONS SECTION 16071 FOR REQUIREMENTS.
4. ALL 120/208V PANELBOARDS SHALL BE PROVIDED WITH 200% NEUTRAL CAPACITY AND AN ISOLATED GROUND BUS IN ADDITION TO THE EQUIPMENT GROUNDING BUS.
5. PROVIDE PERFORMANCE TESTING FOR GROUND-FAULT PROTECTION SYSTEMS ON SITE WITH A WRITTEN RECORD OF THIS TEST SUBMITTED TO THE AUTHORITY HAVING JURISDICTION PER 2011 NEC 230.95(C).

SHEET KEYNOTES

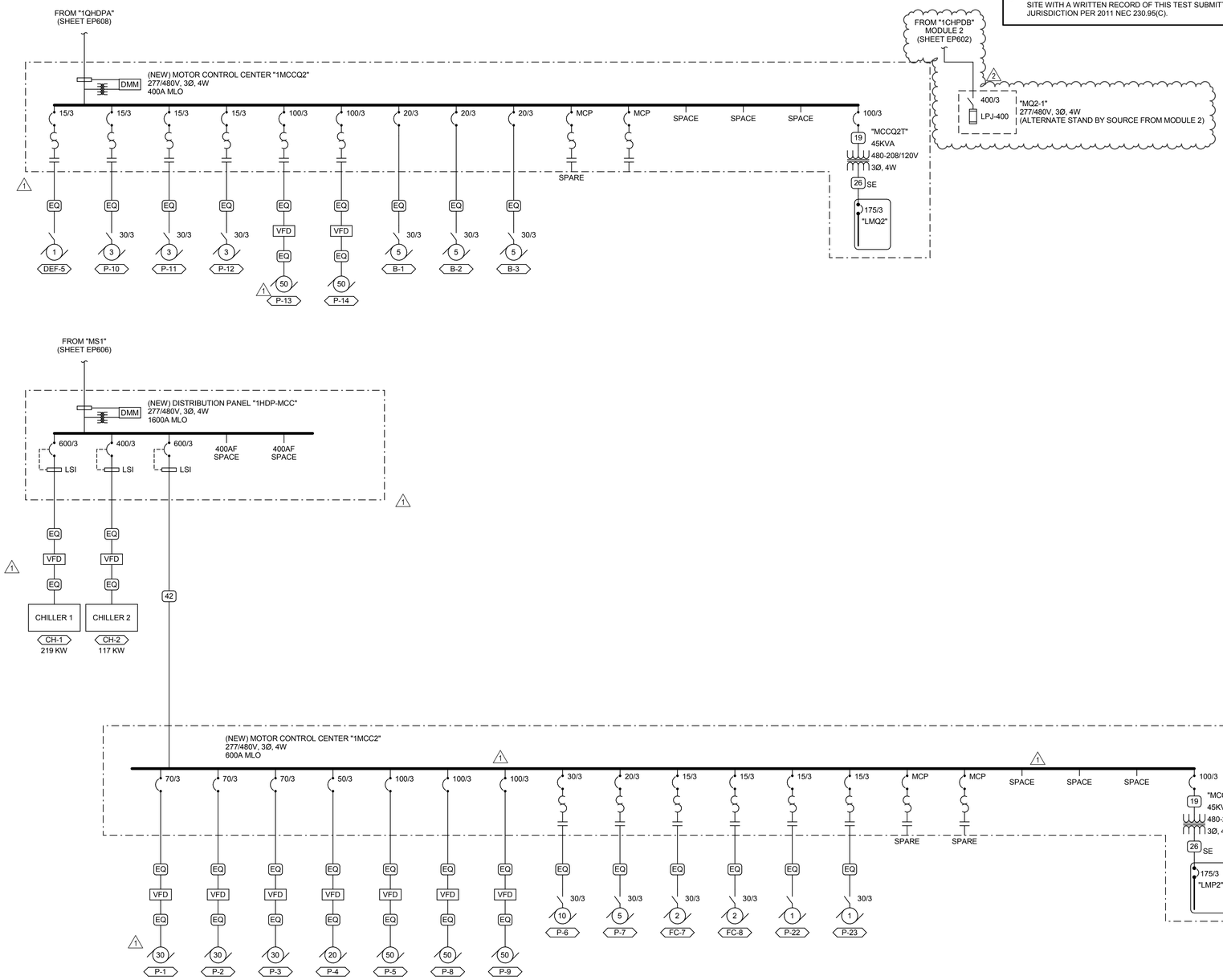

A1 POWER ONE-LINE DIAGRAM - MODULE 2 (e)
SCALE: NTS

CONDUCTOR AND CONDUIT "CC" SCHEDULE

SCHEDULE NUMBER
SUBSCRIPT (NOTE 5)
(E.G.) 5 IG

SYM	AMP	CONDUIT SIZE	CONDUCTOR (NOTE 1) QTY	SIZE	G	IG	SE	NOTES
1	20	.75	2	12	12	12	8	2
2	20	.75	3	12	12	12	8	2,3
3	20	.75	4	12	12	12	8	2,3
4	30	.75	2	10	10	10	8	2
5	30	.75	3	10	10	10	8	2
6	30	.75	4	10	10	10	8	2
7	40	1	2	8	10	8	6	2
8	40	1	3	8	10	8	6	2
9	40	1	4	8	10	8	6	2
10	55	1	2	6	10	8	4	2
11	55	1	3	6	10	8	4	2
12	55	1.25	4	6	10	8	4	2
13	70	1	2	4	8	4	2	2
14	70	1.25	3	4	8	4	2	2
15	70	1.25	4	4	8	4	2	2
16	85	1.25	2	3	8	3	2	2
17	85	1.25	3	3	8	3	2	2
18	85	1.25	4	3	8	3	2	2
19	95	1.25	3	2	8	2	2	2
20	95	1.50	4	2	8	2	2	2
21	130	1.50	3	1	6	2	2	2
22	130	1.50	4	1	6	2	2	2
23	150	2	3	1/0	6	2	1/0	2
24	150	2	4	1/0	6	2	1/0	2
25	175	2	3	2/0	6	2	2/0	2
26	175	2	4	2/0	6	2	2/0	2
27	200	2	3	3/0	6	2	2/0	2
28	200	2.50	4	3/0	6	2	2/0	2
29	230	2.50	3	4/0	4	2	2/0	2
30	230	2.50	4	4/0	4	2	2/0	2
31	255	2.50	3	250	4	1	2/0	2
32	255	2.50	4	250	4	1	2/0	2
33	310	3	3	350	3	1/0	3/0	2
34	310	3	4	350	3	1/0	3/0	2
35	380	3.50	3	500	3	3/0	3/0	2
36	380	4	4	500	3	3/0	3/0	2
37	400	2 EA 2	3	3/0	3	3/0	3/0	2
38	400	2 EA 2.50	4	3/0	3	3/0	3/0	2
39	510	2 EA 2.50	3	250	1	4/0	3/0	2
40	510	2 EA 3	4	250	1	4/0	3/0	2
41	620	2 EA 3	3	350	1/0	4/0	3/0	2,4
42	620	2 EA 3.50	4	350	1/0	4/0	3/0	2,4
43	780	2 EA 3.50	3	500	1/0	4/0	3/0	2,4
44	780	2 EA 4	4	500	1/0	4/0	3/0	2,4
45	855	3 EA 3	3	300	2/0	4/0	3/0	2,4
46	855	3 EA 3	4	300	2/0	4/0	3/0	2,4
47	1000	3 EA 3.50	3	400	2/0	4/0	3/0	4
48	1000	3 EA 3.50	4	400	2/0	4/0	3/0	4
49	1140	3 EA 4	3	500	3/0	4/0	3/0	4
50	1140	3 EA 4	4	500	3/0	4/0	3/0	4
51	1240	4 EA 3	3	350	3/0	4/0	3/0	4
52	1240	4 EA 3	4	350	3/0	4/0	3/0	4
53	1675	5 EA 4	4	400	4/0	4/0	4/0	4
54	2010	6 EA 4	4	400	250	250	250	4
55	2660	7 EA 4	4	500	350	350	350	4
56	3040	8 EA 4	4	500	500	500	500	4
57	4180	11 EA 4	4	500	500	500	500	4
58		5 EA 4						6
59		2 EA 6						6
60		12 EA 6						6

CONDUIT AND CONDUCTOR SCHEDULE NOTES

1. CONDUCTORS SHOWN ARE SHOWN FOR EACH CONDUIT WITH MODIFICATIONS AS NOTED IN NOTE 5. ALL CONDUCTORS SHOWN ARE THWN UNLESS OTHERWISE NOTED.
2. PROVIDE EQUIPMENT GROUND CONDUCTORS PER TABLE 250-122 WHEN CIRCUIT BREAKERS ARE SIZED GREATER THAN AMPERE RATING SHOWN IN TABLE.
3. PROVIDE #10 NEUTRALS FOR MULTIWIRE BRANCH CIRCUITS SERVING COMPUTERS.
4. GROUND (G) CONDUCTOR MAY BE DELETED ON SERVICE ENTRANCE CONDUCTORS.
5. SYMBOL SUBSCRIPTS:

   "IG": INCLUDE IG (INSULATED/ISOLATED GROUND CONDUCTOR) SCHEDULED ALONG WITH THE GROUND OF EQUIPMENT GROUND CONDUCTOR.

   "SE": SUBSTITUTE "SE" CONDUCTOR FOR "G" CONDUCTOR SHOWN, WHICH IS SIZED FOR THE GROUNDING OF THE SECONDARY OF THE SEPARATELY DERIVED SYSTEM.

   "2N": INCLUDE TWO NEUTRAL CONDUCTORS, SIZED AS SCHEDULED FOR PHASED AND NEUTRAL CONDUCTORS.

6. RACEWAY ONLY. CONDUCTORS PROVIDED BY UTILITY.

CRSA
649 E. South Temple
Salt Lake City, UT 84102
801.355.5915

MWL
11798 N. Lakeridge Pkwy.
Ashland, VA 23005
804-228-7473

State of Utah
Department of Administrative Services
Division of Facilities Construction & Management
4110 State Office Building
Salt Lake City, Utah 84114
Phone: (801) 538 - 3018
Fax: (801) 538 - 3267

DFCM APPROVAL STAMP

LICENSED PROFESSIONAL ENGINEER No. 181563 DAVID E. WESEMANN 04-21-2014 STATE OF UTAH

ARCHITECT-ENGINEER STAMP

Unified State Laboratory Module 2

4451 South 2700 West, Taylorsville, UT 84118

DFCM #: 13020300

Project #: B13-024

DATE:	ISSUE TYPE:
April 21, 2014	BID SET

MARK	DATE	DESCRIPTION
2	May 20, 2015	ADDENDUM #3

CHECKED BY: D. WESEMANN
DRAWN BY: DLM

POWER ONE-LINE DIAGRAM - MODULE 2 (e)

EP605

VOLUME 2

C:\Users\jpm\Desktop\Revit Local Files\2013\20130362Elec Central_jpm.rvt
5/20/2015 5:54:48 PM

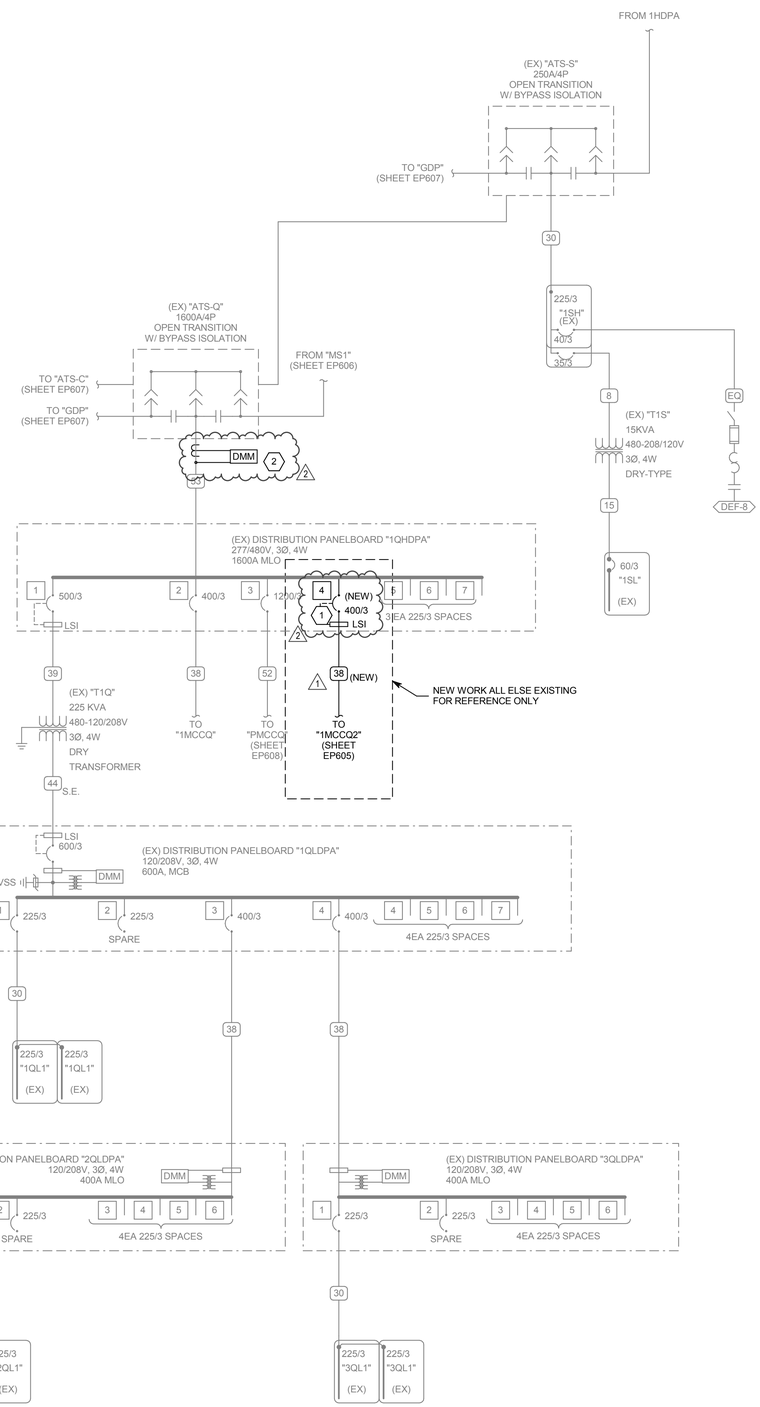

A1 EXISTING POWER ONE-LINE DIAGRAM - MODULE 1 (c)

SCALE: NTS

SHEET KEYNOTES

1. PROVIDE NEW 400 AMP, 3 PHASE, 100KAIC CIRCUIT BREAKER IN EXISTING PANELBOARD.
2. PROVIDE A METER LOAD STUDY FOR A 30-DAY PERIOD AND RECORD PEAK KW/KVA DEMAND, AND REPORT RESULTS TO ENGINEER. THIS SHALL BE DONE PRIOR TO INSTALLING FEEDER TO "1MCCQ2".

GENERAL SHEET NOTES

1. PROVIDE NEMA 3R ENCLOSURES FOR EQUIPMENT LOCATED OUTDOORS. REFER TO PLANS FOR EQUIPMENT LOCATIONS.
2. REFER TO PLANS FOR CONSTRAINTS ON PHYSICAL DIMENSIONS AND CLEARANCE REQUIREMENTS OF EQUIPMENT. PROVIDE EQUIPMENT DIMENSIONS THAT FALL WITHIN THE CONSTRAINTS OF EACH SPECIFIC LOCATION.
3. ALL EQUIPMENT SHALL BE CONSTRUCTED AND BRACED FOR THE SEISMIC CONDITIONS OF THE PROJECT. REFER TO SPECIFICATIONS SECTION 16071 FOR REQUIREMENTS.
4. ALL 120/208V PANELBOARDS SHALL BE PROVIDED WITH 200% NEUTRAL CAPACITY AND AN ISOLATED GROUND BUS IN ADDITION TO THE EQUIPMENT GROUNDING BUS.
5. PROVIDE PERFORMANCE TESTING FOR GROUND-FAULT PROTECTION SYSTEMS ON SITE WITH A WRITTEN RECORD OF THIS TEST SUBMITTED TO THE AUTHORITY HAVING JURISDICTION PER 2011 NEC 230.95(C).

CONDUCTOR AND CONDUIT "CC" SCHEDULE

SCHEDULE NUMBER
SUBSCRIPT (NOTE 5)
(E.G.) 5 IG

SYM	AMP	CONDUIT SIZE	CONDUCTOR (NOTE 1) QTY	SIZE	G	IG	SE	NOTES
1	20	.75	2	12	12	12	8	2
2	20	.75	3	12	12	12	8	2,3
3	20	.75	4	12	12	12	8	2,3
4	30	.75	2	10	10	10	8	2
5	30	.75	3	10	10	10	8	2
6	30	.75	4	10	10	10	8	2
7	40	1	2	8	10	8	6	2
8	40	1	3	8	10	8	6	2
9	40	1	4	8	10	8	6	2
10	55	1	2	6	10	8	4	2
11	55	1	3	6	10	8	4	2
12	55	1.25	4	6	10	8	4	2
13	70	1	2	4	8	4	2	2
14	70	1.25	3	4	8	4	2	2
15	70	1.25	4	4	8	4	2	2
16	85	1.25	2	3	8	3	2	2
17	85	1.25	3	3	8	3	2	2
18	85	1.25	4	3	8	3	2	2
19	95	1.25	3	2	8	2	2	2
20	95	1.50	4	2	8	2	2	2
21	130	1.50	3	1	6	2	2	2
22	130	1.50	4	1	6	2	2	2
23	150	2	3	1/0	6	2	1/0	2
24	150	2	4	1/0	6	2	1/0	2
25	175	2	3	2/0	6	2	2/0	2
26	175	2	4	2/0	6	2	2/0	2
27	200	2	3	3/0	6	2	2/0	2
28	200	2.50	4	3/0	6	2	2/0	2
29	230	2.50	3	4/0	4	2	2/0	2
30	230	2.50	4	4/0	4	2	2/0	2
31	255	2.50	3	250	4	1	2/0	2
32	255	2.50	4	250	4	1	2/0	2
33	310	3	3	350	3	1/0	3/0	2
34	310	3	4	350	3	1/0	3/0	2
35	380	3.50	3	500	3	3/0	3/0	2
36	380	4	4	500	3	3/0	3/0	2
37	400	2 EA 2	3	3/0	3	3/0	3/0	2
38	400	2 EA 2.50	4	3/0	3	3/0	3/0	2
39	510	2 EA 2.50	3	250	1	4/0	3/0	2
40	510	2 EA 3	4	250	1	4/0	3/0	2
41	620	2 EA 3	3	350	1/0	4/0	3/0	2,4
42	620	2 EA 3.50	4	350	1/0	4/0	3/0	2,4
43	780	2 EA 3.50	3	500	1/0	4/0	3/0	2,4
44	780	2 EA 4	4	500	1/0	4/0	3/0	2,4
45	855	3 EA 3	3	300	2/0	4/0	3/0	2,4
46	855	3 EA 3	4	300	2/0	4/0	3/0	2,4
47	1000	3 EA 3.50	3	400	2/0	4/0	3/0	4
48	1000	3 EA 3.50	4	400	2/0	4/0	3/0	4
49	1140	3 EA 4	3	500	3/0	4/0	3/0	4
50	1140	3 EA 4	4	500	3/0	4/0	3/0	4
51	1240	4 EA 3	3	350	3/0	4/0	3/0	4
52	1240	4 EA 3	4	350	3/0	4/0	3/0	4
53	1675	5 EA 4	4	400	4/0	4/0	4/0	4
54	2010	6 EA 4	4	400	250	250	250	4
55	2660	7 EA 4	4	500	350	350	350	4
56	3040	8 EA 4	4	500	500	500	500	4
57	4180	11 EA 4	4	500	500	500	500	4
58		5 EA 4						6
59		2 EA 6						6
60		12 EA 6						6

CONDUIT AND CONDUCTOR SCHEDULE NOTES

1. CONDUCTORS SHOWN ARE SHOWN FOR EACH CONDUIT WITH MODIFICATIONS AS NOTED IN NOTE 5. ALL CONDUCTORS SHOWN ARE THWN UNLESS OTHERWISE NOTED.
2. PROVIDE EQUIPMENT GROUND CONDUCTORS PER TABLE 250-122 WHEN CIRCUIT BREAKERS ARE SIZED GREATER THAN AMPERE RATING SHOWN IN TABLE.
3. PROVIDE #10 NEUTRALS FOR MULTIWIRE BRANCH CIRCUITS SERVING COMPUTERS.
4. GROUND (G) CONDUCTOR MAY BE DELETED ON SERVICE ENTRANCE CONDUCTORS.
5. SYMBOL SUBSCRIPTS:
   - "IG": INCLUDE IG (INSULATED/ISOLATED GROUND CONDUCTOR) SCHEDULED ALONG WITH THE GROUND OF EQUIPMENT GROUND CONDUCTOR.
   - "SE": SUBSTITUTE "SE" CONDUCTOR FOR "G" CONDUCTOR SHOWN, WHICH IS SIZED FOR THE GROUNDING OF THE SECONDARY OF THE SEPARATELY DERIVED SYSTEM.
   - "2N": INCLUDE TWO NEUTRAL CONDUCTORS, SIZED AS SCHEDULED FOR PHASED AND NEUTRAL CONDUCTORS.
6. RACEWAY ONLY. CONDUCTORS PROVIDED BY UTILITY.

CRSA
649 E. South Temple
Salt Lake City, UT 84102
801.355.5915

MWL
11798 N. Lakeridge Pkwy.
Ashland, VA 23005
804-228-7473

State of Utah
Department of Administrative Services
Division of Facilities Construction & Management
4110 State Office Building
Salt Lake City, Utah 84114
Phone: (801) 538 - 3018
Fax: (801) 538 - 3267

DFCM APPROVAL STAMP

LICENSED PROFESSIONAL ENGINEER
No. 181563
DAVID E. WESEMANN
04-21-2014
STATE OF UTAH

ARCHITECT-ENGINEER STAMP

Unified State Laboratory Module 2

4451 South 2700 West, Taylorsville, UT 84118

DFCM #: 13020300

Project #: B13-024

DATE:	ISSUE TYPE:
April 21, 2014	BID SET

MARK	DATE	DESCRIPTION
2	May 20, 2015	ADDENDUM #3

CHECKED BY: D. WESEMANN
DRAWN BY: DLM

EXISTING POWER ONE-LINE DIAGRAM - MODULE 1 (c)

EP608

VOLUME 2

C:\Users\jpm\Desktop\Revit Local Files\2013\2013030\2EElec Central_jpm.rvt
5/20/2015 5:55:06 PM

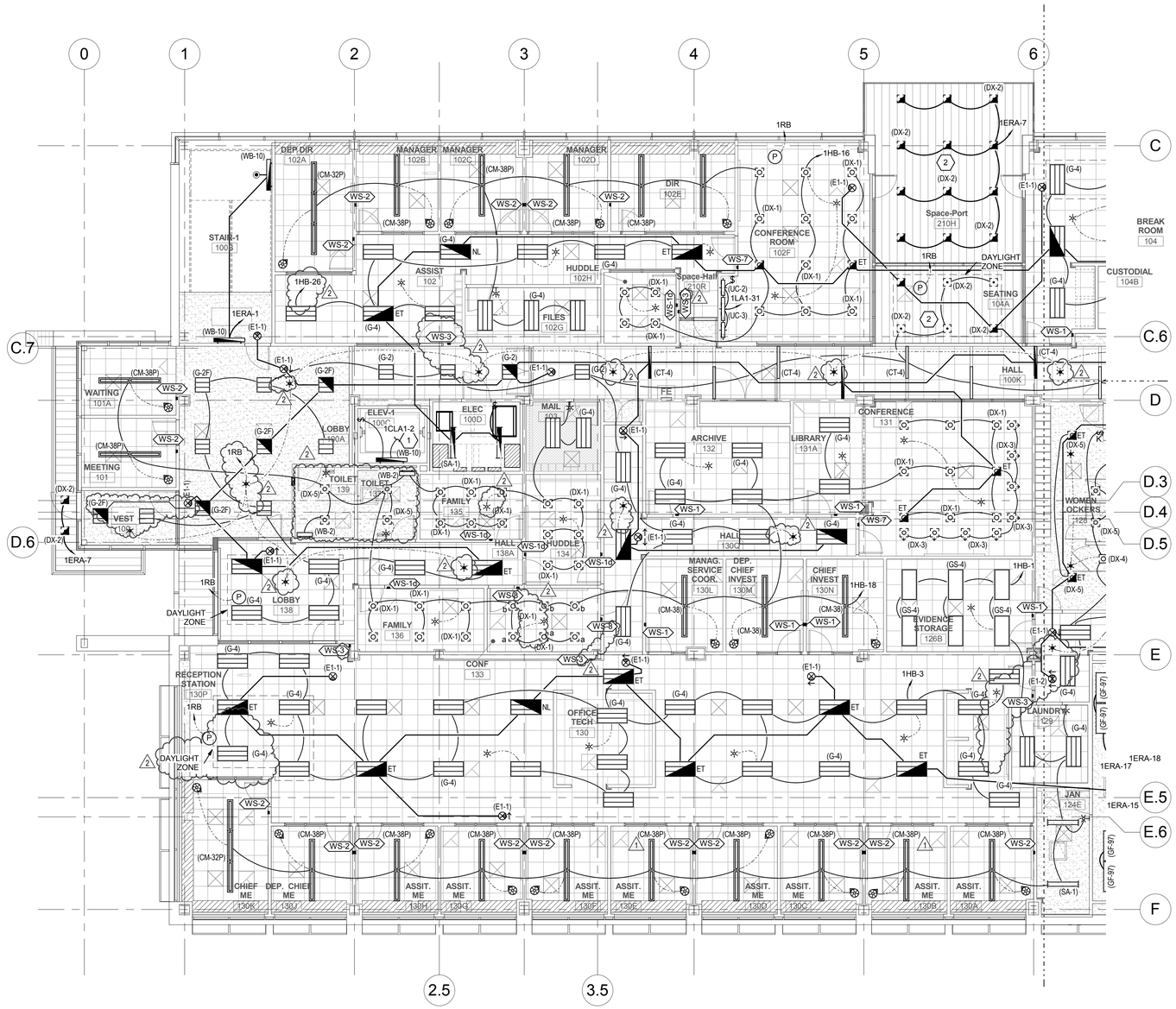

A1 FIRST LEVEL LIGHTING PLAN - AREA A

SCALE: 1/8" = 1'-0"

GENERAL SHEET NOTES

1. PROVIDE UNSWITCHED PORTION OF CIRCUIT TO ALL EXIT SIGNS. ALL OTHER EMERGENCY LIGHTS SHALL BE SWITCHED THROUGH EMERGENCY RELAYS AS INDICATED.
2. COORDINATE ALL LIGHTING IN MEHANICAL, ELECTRICAL AND TECH ROOMS WITH EQUIPMENT TO AVOID DUCTS, PIPES, ETC.

SHEET KEYNOTES

1. CIRCUIT ELEVATOR PIT LIGHT TO SAME CIRCUIT AS THE ELEVATOR PIT RECEPTACLE.
2. DX-2'S IN THIS LOCATION REQUIRE TRIM KITS COMPATIBLE WITH METAL CHANNEL CEILING.

KEY PLAN

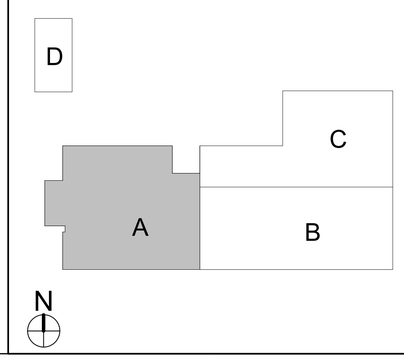

CRSA
649 E. South Temple
Salt Lake City, UT 84102
801.355.5915

MWL
11798 N. Lakeridge Pkwy.
Ashland, VA 23005
804-228-7473

State of Utah
Department of Administrative Services
Division of Facilities Construction & Management
4110 State Office Building
Salt Lake City, Utah 84114
Phone: (801) 538 - 3018
Fax: (801) 538 - 3267

DFCM APPROVAL STAMP

LICENSED PROFESSIONAL ENGINEER No. 181563 DAVID E. WESEMANN 04-21-2014 STATE OF UTAH

ARCHITECT-ENGINEER STAMP

Unified State Laboratory Module 2

4451 South 2700 West, Taylorsville, UT 84118

DFCM #:	13020300
Project #:	B13-024

DATE:	ISSUE TYPE:
April 21, 2014	BID SET

MARK	DATE	DESCRIPTION
2	May 20, 2015	ADDENDUM #3

CHECKED BY	D. WESEMANN
DRAWN BY	DLM

FIRST LEVEL LIGHTING PLAN - AREA A

EL101a

VOLUME 2

C:\Users\jim\Desktop\Revit Local Files\20132013092E\Elec Central_jim.rvt
5/20/2015 5:50:44 PM

GENERAL SHEET NOTES

1. PROVIDE UNSWITCHED PORTION OF CIRCUIT TO ALL EXIT SIGNS. ALL OTHER EMERGENCY LIGHTS SHALL BE SWITCHED THROUGH EMERGENCY RELAYS AS INDICATED.
2. COORDINATE ALL LIGHTING IN MEHANICAL, ELECTRICAL AND TECH ROOMS WITH EQUIPMENT TO AVOID DUCTS, PIPES, ETC.

SHEET KEYNOTES

1. PUSH BUTTON STATION TO BE INSTALLED IN HEADBOARD.
2. CIRCUIT ELEVATOR PIT LIGHT TO SAME CIRCUIT AS THE ELEVATOR PIT RECEPTACLE.
3. COORDINATE LIGHTING LOCATIONS IN THIS AREA WITH SUSPENDED EQUIPMENT INCLUDING GARAGE DOORS.

2 X-RAY IN USE LIGHTS CONTROLLED TO BE ON WHEN EITHER DENTAL X-RAY OR LARGE X-RAY MACHINES ARE USED.

KEY PLAN

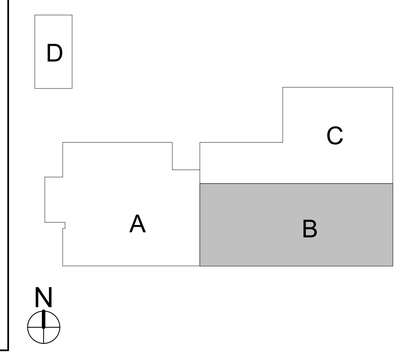

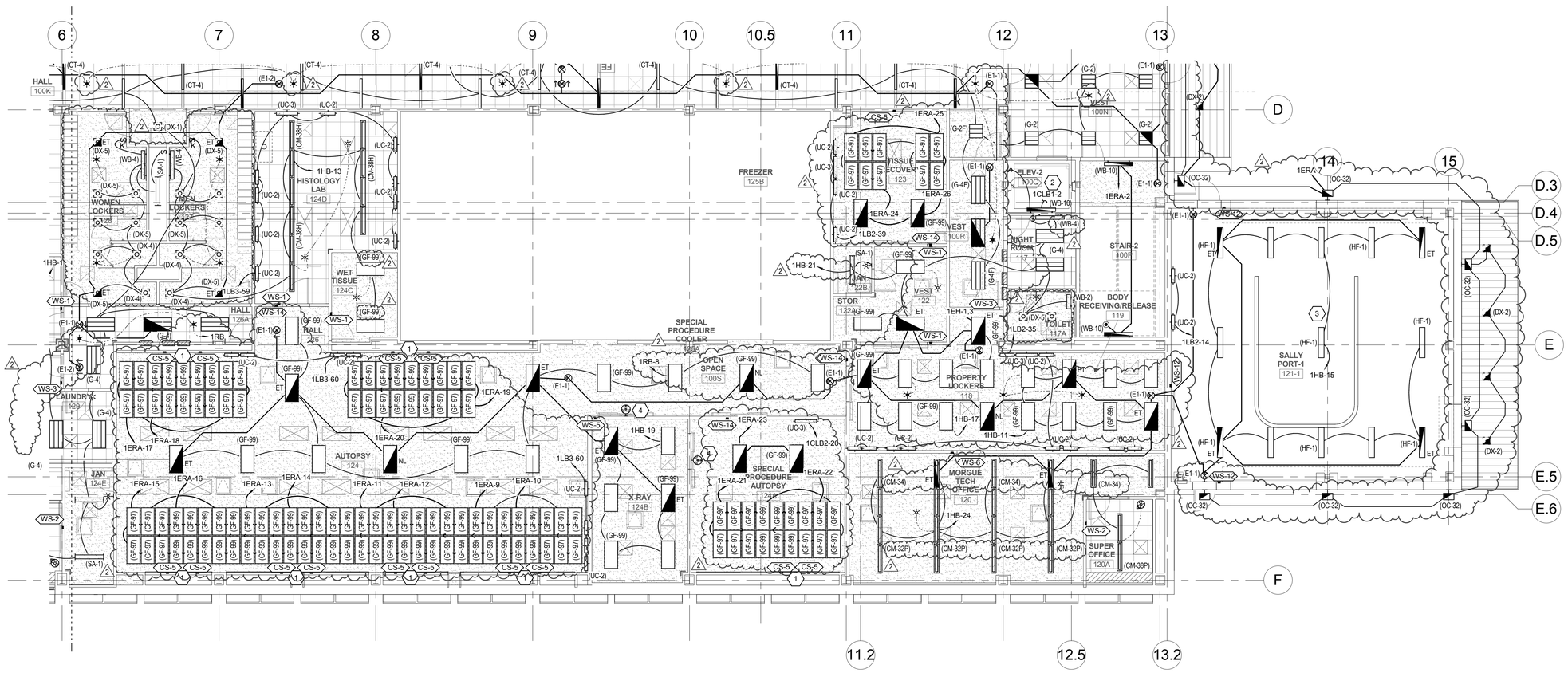

A1 FIRST LEVEL LIGHTING PLAN - AREA B

SCALE: 1/8" = 1'-0"

CRSA
649 E. South Temple
Salt Lake City, UT 84102
801.355.5915

MWL
11798 N. Lakeridge Pkwy.
Ashland, VA 23005
804-228-7473

State of Utah
Department of Administrative Services
Division of Facilities Construction & Management
4110 State Office Building
Salt Lake City, Utah 84114
Phone: (801) 538 - 3018
Fax: (801) 538 - 3267

DFCM APPROVAL STAMP

ARCHITECT-ENGINEER STAMP

LICENSED PROFESSIONAL ENGINEER No. 181563 DAVID E. WESEMANN 04-21-2014 STATE OF UTAH

Unified State Laboratory Module 2

4451 South 2700 West, Taylorsville, UT 84118

DFCM #:	13020300
Project #:	B13-024
DATE: April 21, 2014	ISSUE TYPE: BID SET

MARK	DATE	DESCRIPTION
2	May 20, 2015	ADDENDUM #3

CHECKED BY	D. WESEMANN
DRAWN BY	DLM

FIRST LEVEL LIGHTING PLAN - AREA B

EL101b

VOLUME 2

C:\Users\jim\Desktop\Revit Local Files\2013\2013\0362Elec Central_jim.rvt
5/20/2015 7:13:03 PM

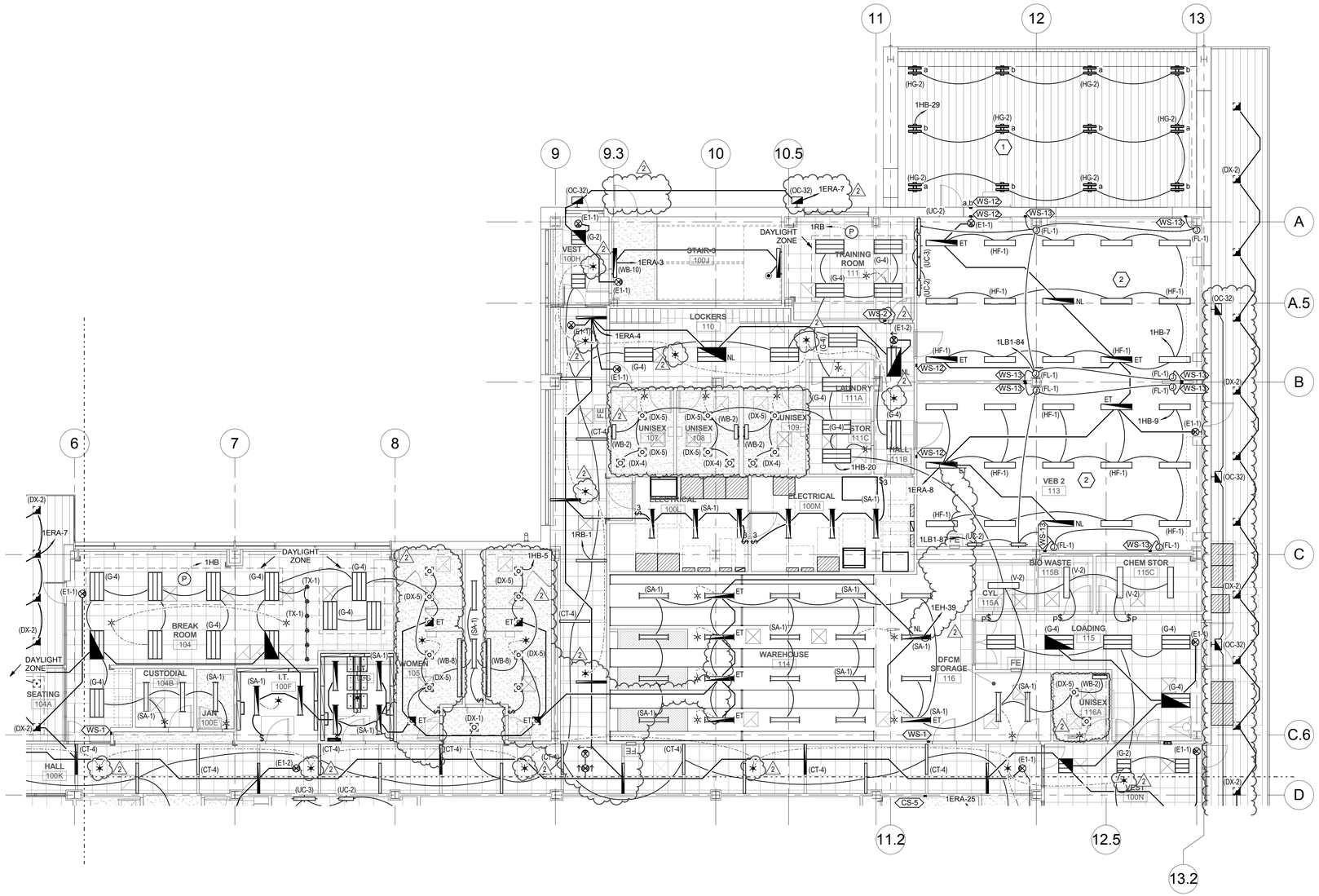

A1 FIRST LEVEL LIGHTING PLAN - AREA C

SCALE: 1/8" = 1'-0"

GENERAL SHEET NOTES

1 PROVIDE UNSWITCHED PORTION OF CIRCUIT TO ALL EXIT SIGNS. ALL OTHER EMERGENCY LIGHTS SHALL BE SWITCHED THROUGH EMERGENCY RELAYS AS INDICATED.

2 COORDINATE ALL LIGHTING IN MEHANICAL, ELECTRICAL AND TECH ROOMS WITH EQUIPMENT TO AVOID DUCTS, PIPES, ETC.

SHEET KEYNOTES

1 CONTRACTOR TO PROVIDE UNISTRUT FOR MOUNTING OF LIGHTS AT TOP OF BEAMS.

2 COORDINATE LIGHTING LOCATIONS IN THIS AREA WITH SUSPENDED EQUIPMENT INCLUDING GARAGE DOORS.

3 DX-2'S IN THIS LOCATION REQUIRE TRIM KITS COMPATIBLE WITH METAL CHANNEL CEILING.

KEY PLAN

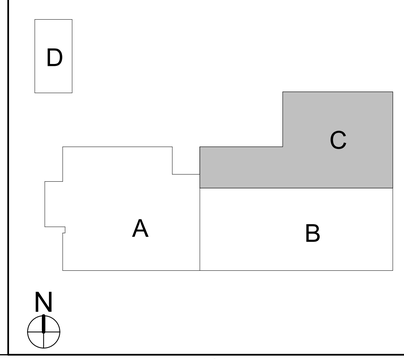

CRSA
649 E. South Temple
Salt Lake City, UT 84102
801.355.5915

MWL
11798 N. Lakeridge Pkwy.
Ashland, VA 23005
804-228-7473

State of Utah
Department of Administrative Services
Division of Facilities Construction & Management
DFCM
4110 State Office Building
Salt Lake City, Utah 84114
Phone: (801) 538 - 3018
Fax: (801) 538 - 3267

DFCM APPROVAL STAMP

LICENSED PROFESSIONAL ENGINEER
No. 181563
DAVID E. WESEMANN
04-21-2014
STATE OF UTAH

ARCHITECT-ENGINEER STAMP

Unified State Laboratory Module 2

4451 South 2700 West, Taylorsville, UT 84118

DFCM #:	13020300
Project #:	B13-024

DATE:	ISSUE TYPE:
April 21, 2014	BID SET

MARK	DATE	DESCRIPTION
2	May 20, 2015	ADDENDUM #3

CHECKED BY	D. WESEMANN
DRAWN BY	DLM

FIRST LEVEL LIGHTING PLAN - AREA C

EL101c

VOLUME 2

C:\Users\jim\Desktop\Revit Local Files\20132013030E2Elec Central_jim.rvt
5/20/2015 5:51:01 PM

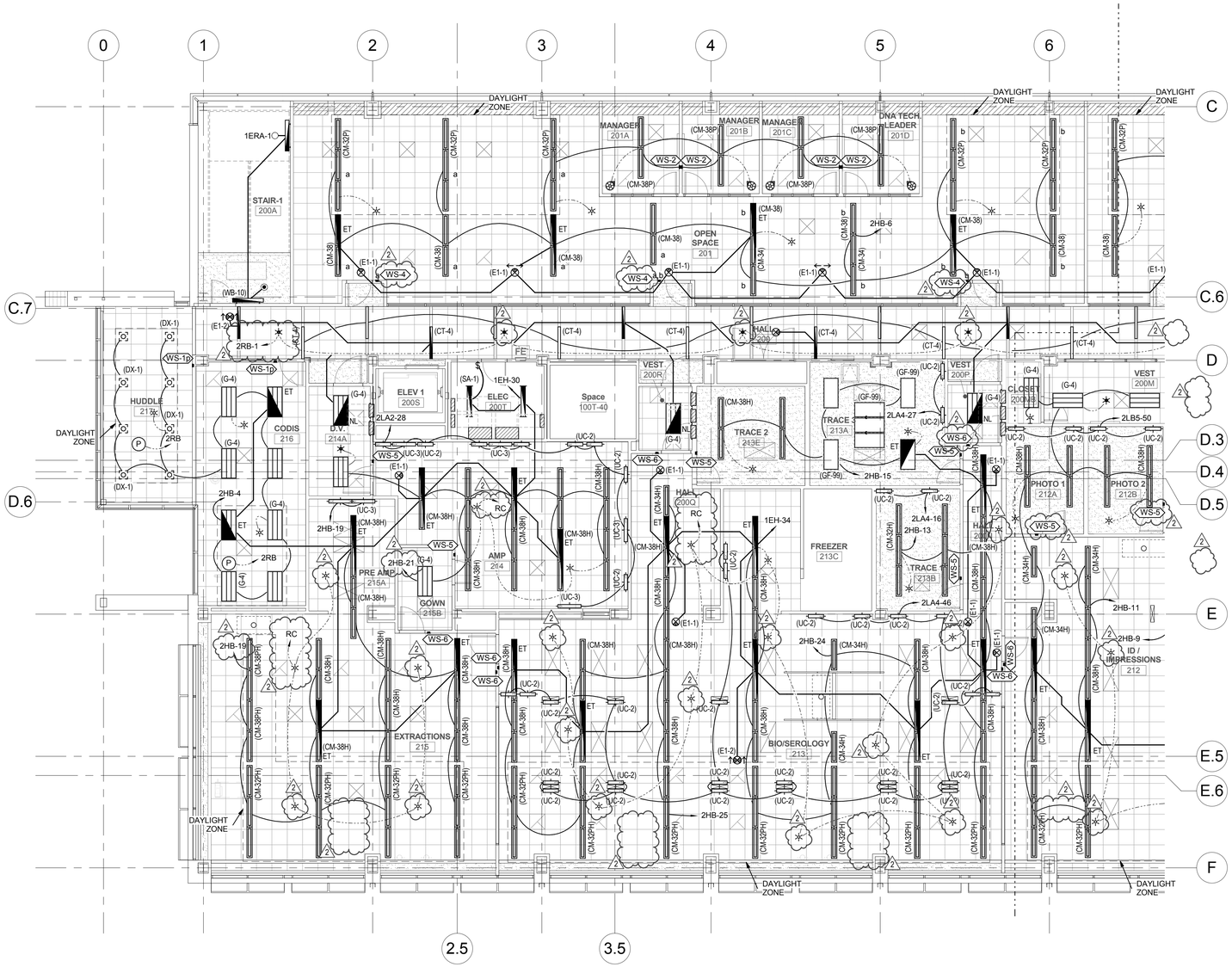

A1 SECOND LEVEL LIGHTING PLAN - AREA A

SCALE: 1/8" = 1'-0"

C:\Users\jgm\Desktop\Revit Local Files\2013\2013\0362Elec Central_jgm.rvt
5/20/2015 5:51:17 PM

GENERAL SHEET NOTES

1. PROVIDE UNSWITCHED PORTION OF CIRCUIT TO ALL EXIT SIGNS. ALL OTHER EMERGENCY LIGHTS SHALL BE SWITCHED THROUGH EMERGENCY RELAYS AS INDICATED.
2. COORDINATE ALL LIGHTING IN MEHANICAL, ELECTRICAL AND TECH ROOMS WITH EQUIPMENT TO AVOID DUCTS, PIPES, ETC.

SHEET KEYNOTES

KEY PLAN

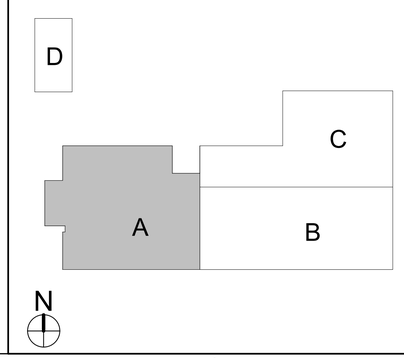

CRSA
649 E. South Temple
Salt Lake City, UT 84102
801.355.5915

MWL
11798 N. Lakeridge Pkwy.
Ashland, VA 23005
804-228-7473

State of Utah
Department of Administrative Services
Division of Facilities Construction & Management
4110 State Office Building
Salt Lake City, Utah 84114
Phone: (801) 538 - 3018
Fax: (801) 538 - 3267

DFCM APPROVAL STAMP

LICENSED PROFESSIONAL ENGINEER No. 181563 DAVID E. WESEMANN 04-21-2014 STATE OF UTAH

ARCHITECT-ENGINEER STAMP

Unified State Laboratory Module 2

4451 South 2700 West, Taylorsville, UT 84118

DFCM #:	13020300
Project #:	B13-024

DATE:	ISSUE TYPE:
April 21, 2014	BID SET

MARK	DATE	DESCRIPTION
2	May 20, 2015	ADDENDUM #3

CHECKED BY	D. WESEMANN
DRAWN BY	DLM

SECOND LEVEL LIGHTING PLAN - AREA A

EL102a

VOLUME 2

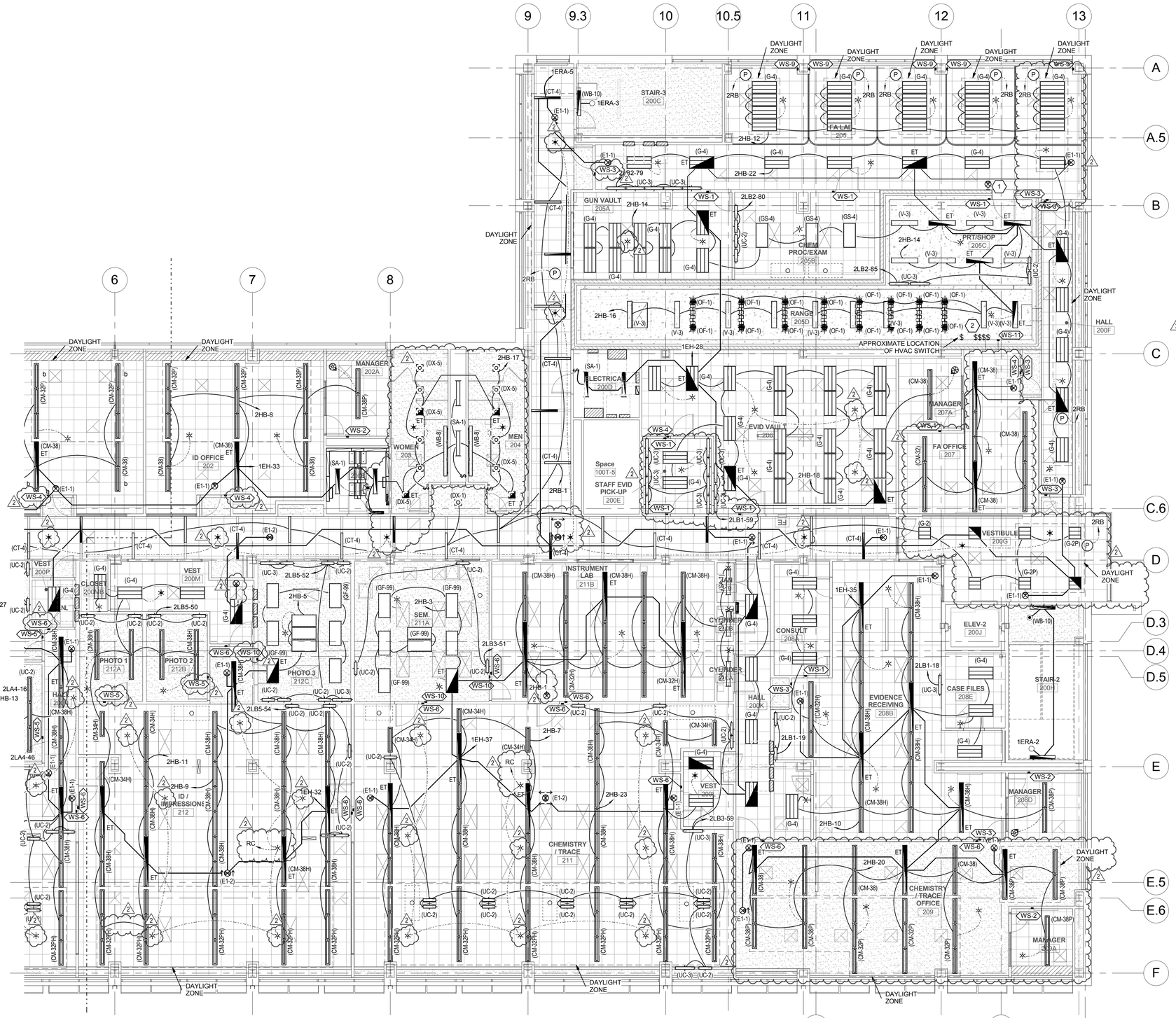

A1 SECOND LEVEL LIGHTING PLAN - AREA B

SCALE: 1/8" = 1'-0"

GENERAL SHEET NOTES

1 PROVIDE UNSWITCHED PORTION OF CIRCUIT TO ALL EXIT SIGNS. ALL OTHER EMERGENCY LIGHTS SHALL BE SWITCHED THROUGH EMERGENCY RELAYS AS INDICATED.

2 COORDINATE ALL LIGHTING IN MEHANICAL, ELECTRICAL AND TECH ROOMS WITH EQUIPMENT TO AVOID DUCTS, PIPES, ETC.

SHEET KEYNOTES

1 FIRING RANGE IN USE SIGN TO BE INTERLOCKED WITH FIRING RANGE HVAC SYSTEM. WHEN FIRING RANGE HVAC SYSTEM IS ON, IN USE SIGN WILL BE ON AS WELL. COORDINATE CONNECTION REQUIREMENTS AND SYSTEM INTERFACE WITH FIRING RANGE HVAC INSTALLER.

2 SWITCH BANK SWITCHES TO OPERATE EACH ROW OF SPOTLIGHTS AND AMBIENT LIGHTS AS INDICATED IN FIRING RANGE. PROVIDE POWER TO SWITCHES THROUGH FIRING RANGE ROOM CONTROLLER AS INDICATED IN LIGHTING CONTROL DIAGRAM A2/EL504. COORDINATE DESIRED LAYOUT FOR LIGHT SWITCHES WITH OWNER AND USER GROUP PRIOR TO ROUGH-IN.

KEY PLAN

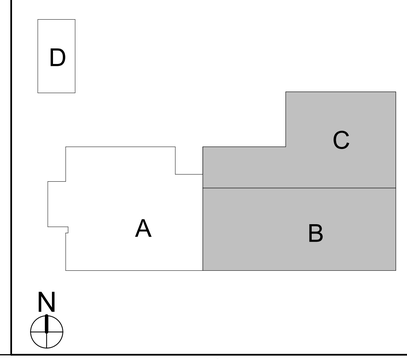

CRSA
649 E. South Temple
Salt Lake City, UT 84102
801.355.5915

MWL
11798 N. Lakeridge Pkwy.
Ashland, VA 23005
804-228-7473

State of Utah
Department of Administrative Services
Division of Facilities Construction & Management
4110 State Office Building
Salt Lake City, Utah 84114
Phone: (801) 538 - 3018
Fax: (801) 538 - 3267

DFCM APPROVAL STAMP

ARCHITECT-ENGINEER STAMP
No. 181563
DAVID E. WESEMANN
04-21-2014
STATE OF UTAH

Unified State Laboratory Module 2

4451 South 2700 West, Taylorsville, UT 84118

DFCM #:	13020300
Project #:	B13-024
DATE:	ISSUE TYPE:
April 21, 2014	BID SET

MARK	DATE	DESCRIPTION
2	May 20, 2015	ADDENDUM #3

CHECKED BY	D. WESEMANN
DRAWN BY	DLM

SECOND LEVEL LIGHTING PLAN - AREA B

EL102b

VOLUME 2

C:\Users\jim\Desktop\Revit Local Files\2013\20130362Elec Central_jim.rvt
5/20/2015 5:51:31 PM

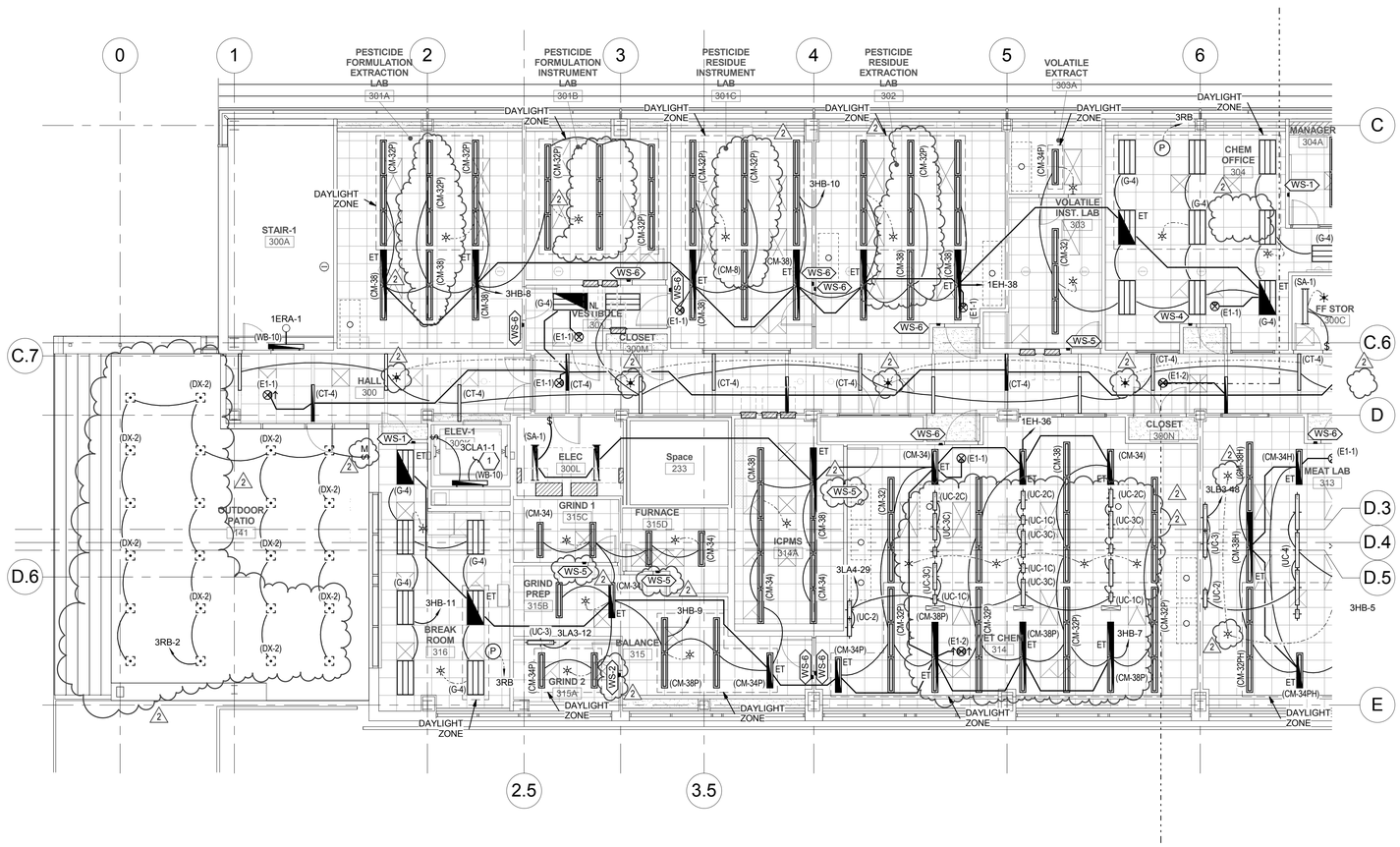

A1 THIRD LEVEL LIGHTING PLAN - AREA A

SCALE: 1/8" = 1'-0"

GENERAL SHEET NOTES

1. PROVIDE UNSWITCHED PORTION OF CIRCUIT TO ALL EXIT SIGNS. ALL OTHER EMERGENCY LIGHTS SHALL BE SWITCHED THROUGH EMERGENCY RELAYS AS INDICATED.
2. COORDINATE ALL LIGHTING IN MEHANICAL, ELECTRICAL AND TECH ROOMS WITH EQUIPMENT TO AVOID DUCTS, PIPES, ETC.

SHEET KEYNOTES

1. CIRCUIT ELEVATOR HOISTWAY LIGHT TO SAME CIRCUIT AS THE ELEVATOR HOISTWAY RECEPTACLE.

KEY PLAN

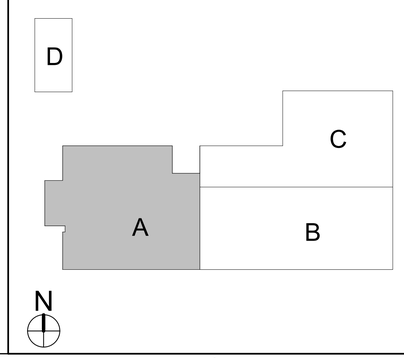

CRSA
649 E. South Temple
Salt Lake City, UT 84102
801.355.5915

MWL
11798 N. Lakeridge Pkwy.
Ashland, VA 23005
804-228-7473

State of Utah
Department of Administrative Services
Division of Facilities Construction & Management
4110 State Office Building
Salt Lake City, Utah 84114
Phone: (801) 538 - 3018
Fax: (801) 538 - 3267

DFCM APPROVAL STAMP

No. 181563
DAVID E. WESEMANN
04-21-2014
STATE OF UTAH

ARCHITECT-ENGINEER STAMP

Unified State Laboratory Module 2

4451 South 2700 West, Taylorsville, UT 84118

DFCM #:	13020300
Project #:	B13-024

DATE:	ISSUE TYPE:
April 21, 2014	BID SET

MARK	DATE	DESCRIPTION
2	May 20, 2015	ADDENDUM #3

CHECKED BY	D. WESEMANN
DRAWN BY	DLM

THIRD LEVEL LIGHTING PLAN - AREA A

EL103a

VOLUME 2

C:\Users\jgrm\Desktop\Revit Local Files\2013\2013036\Elec Central_jgrm.rvt
5/20/2015 5:51:34 PM

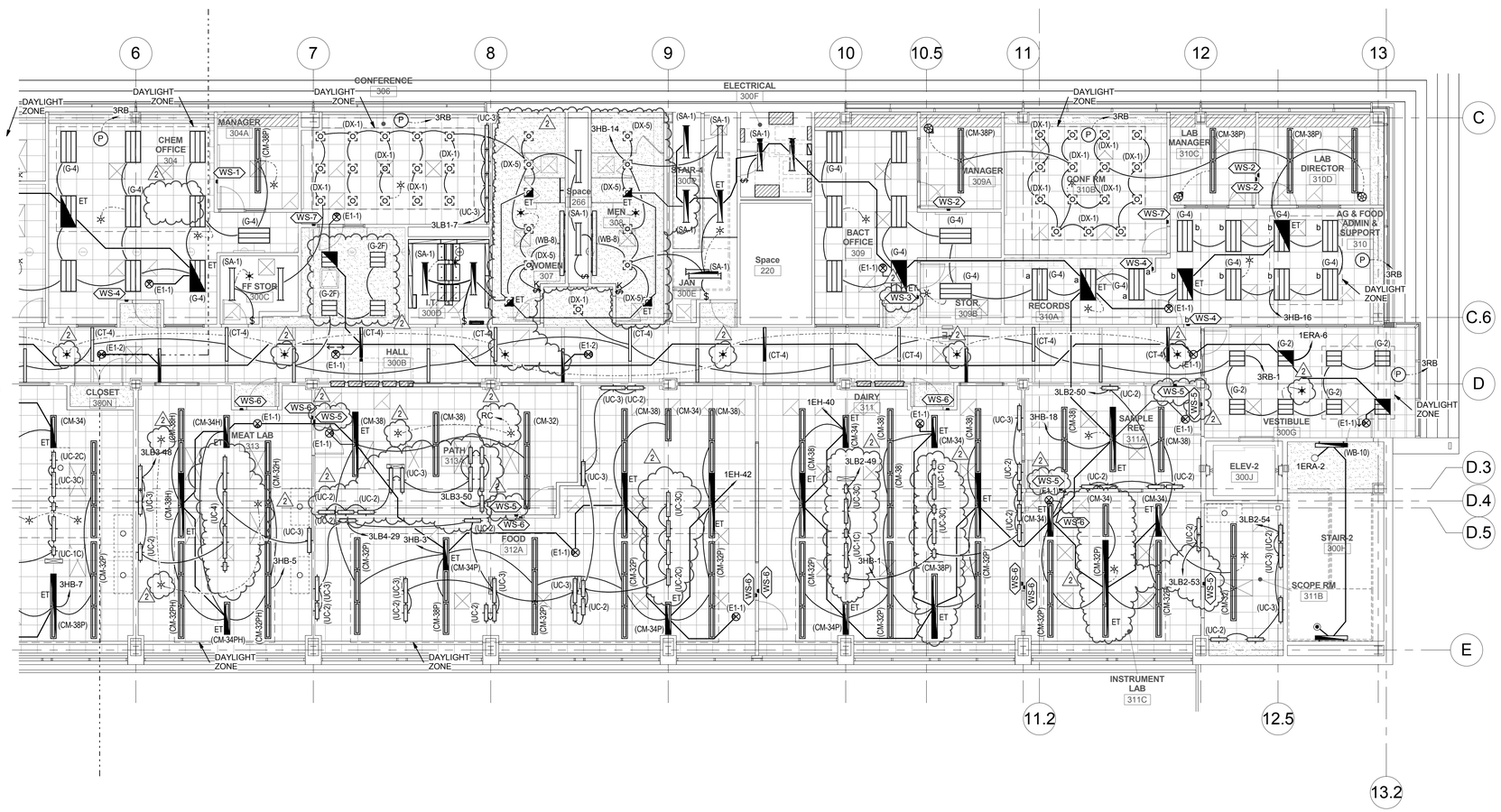

A1 THIRD LEVEL LIGHTING PLAN - AREA B

SCALE: 1/8" = 1'-0"

GENERAL SHEET NOTES

1. PROVIDE UNSWITCHED PORTION OF CIRCUIT TO ALL EXIT SIGNS. ALL OTHER EMERGENCY LIGHTS SHALL BE SWITCHED THROUGH EMERGENCY RELAYS AS INDICATED.
2. COORDINATE ALL LIGHTING IN MEHANICAL, ELECTRICAL AND TECH ROOMS WITH EQUIPMENT TO AVOID DUCTS, PIPES, ETC.

SHEET KEYNOTES

KEY PLAN

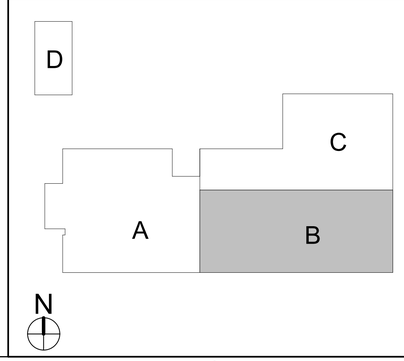

CRSA
649 E. South Temple
Salt Lake City, UT 84102
801.355.5915

MWL
11798 N. Lakeridge Pkwy.
Ashland, VA 23005
804-228-7473

State of Utah
Department of Administrative Services
Division of Facilities Construction & Management
4110 State Office Building
Salt Lake City, Utah 84114
Phone: (801) 538 - 3018
Fax: (801) 538 - 3267

DFCM APPROVAL STAMP

LICENSED PROFESSIONAL ENGINEER No. 181563 DAVID E. WESEMANN 04-21-2014 STATE OF UTAH

ARCHITECT-ENGINEER STAMP

Unified State Laboratory Module 2

4451 South 2700 West, Taylorsville, UT 84118

DFCM #:	13020300
Project #:	B13-024
DATE:	ISSUE TYPE:
April 21, 2014	BID SET

MARK	DATE	DESCRIPTION
2	May 20, 2015	ADDENDUM #3

CHECKED BY	D. WESEMANN
DRAWN BY	DLM

THIRD LEVEL LIGHTING PLAN - AREA B

EL103b

VOLUME 2

C:\Users\jpm\Desktop\Revit Local Files\2013\20130362\Elec Central_jpm.rvt
5/20/2015 5:51:40 PM

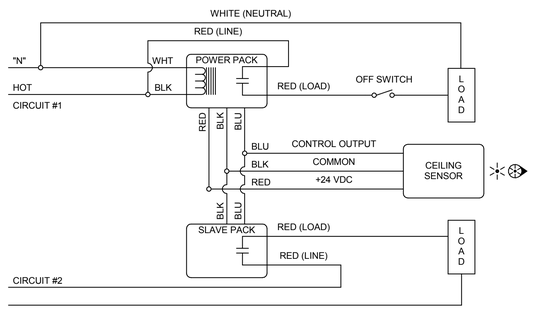

C2 TYPICAL ROOM WITH ONE CEILING SENSOR, CONTROLLING TWO CIRCUITS

SCALE: NTS

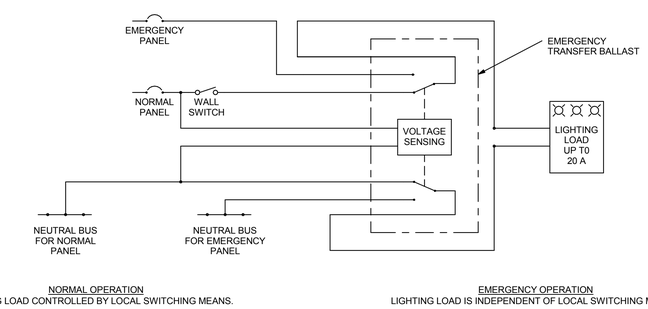

B2 EMERGENCY LIGHTING TRANSFER DEVICE DETAIL

SCALE: NTS

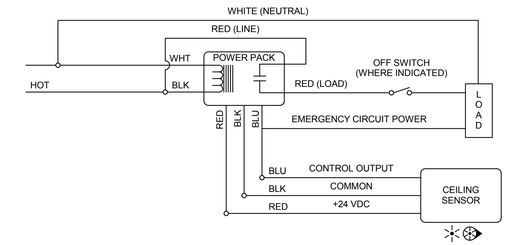

D4 TYPICAL ROOM WITH ONE CEILING SENSOR, WITH OR WITHOUT WALL SWITCH

SCALE: NTS

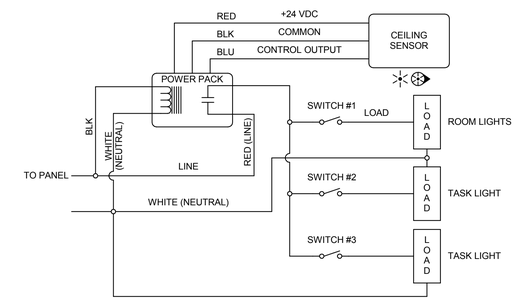

C4 TYPICAL ROOM WITH ONE CEILING SENSOR, ONE CIRCUIT AND MULTIPLE SWITCHED LOADS

SCALE: NTS

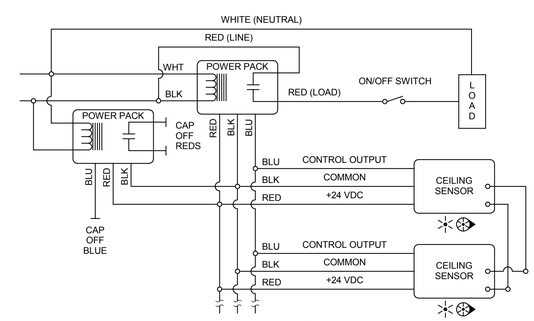

B4 TYPICAL ROOM WITH MULTIPLE CEILING SENSORS

SCALE: NTS

2

CRSA
649 E. South Temple
Salt Lake City, UT 84102
801.355.5915

MWL
11798 N. Lakeridge Pkwy.
Ashland, VA 23005
804-228-7473

State of Utah
Department of Administrative Services
Division of Facilities Construction & Management
DFCM
4110 State Office Building
Salt Lake City, Utah 84114
Phone: (801) 538 - 3018
Fax: (801) 538 - 3267

DFCM APPROVAL STAMP

REGISTERED PROFESSIONAL ENGINEER
No. 181563
DAVID E. WESEMANN
04-21-2014
STATE OF UTAH

ARCHITECT-ENGINEER STAMP

Unified State Laboratory Module 2

4451 South 2700 West, Taylorsville, UT 84118

DFCM #:	13020300
Project #:	B13-024

DATE:	ISSUE TYPE:
April 21, 2014	BID SET

MARK	DATE	DESCRIPTION
2	May 20, 2015	ADDENDUM #3

CHECKED BY	D. WESEMANN
DRAWN BY	DLM

LIGHTING DETAILS AND DIAGRAMS

EL501

VOLUME 2

C:\Users\jim\Desktop\Revit Local Files\20132013030825Elec Central_jim.rvt
5/20/2015 5:51:51 PM

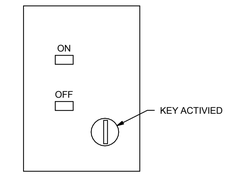

D5 TYPICAL WALL STATION

SCALE: NTS

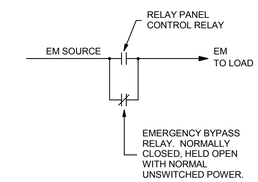

C5 EMERGENCY RELAY SCHEMATIC

SCALE: NTS

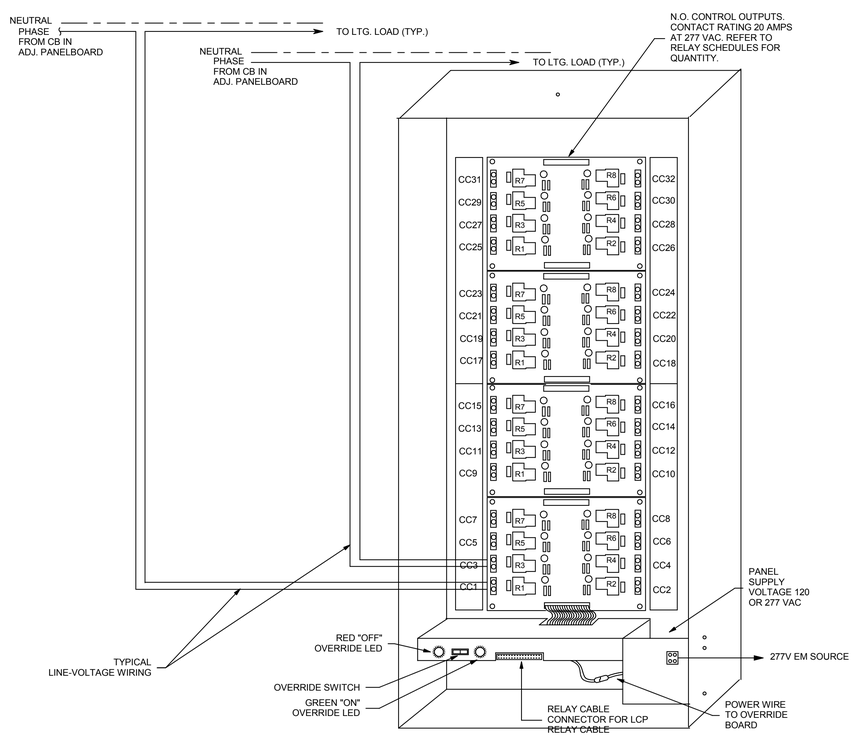

A2 TYPICAL RELAY PANEL WIRING DETAIL

SCALE: NTS

GENERAL NOTES

1. PERIPHERAL DEVICES (PHOTOCELLS, WALL STATIONS, ETC.) ARE SHOWN ONLY AS TYPICAL AND DO NOT REPRESENT ACTUAL QUANTITIES.
2. ALL CONTROL WIRING PER MANUFACTURERS WRITTEN INSTRUCTIONS. RS-485 OR CAT6 ETHERNET PERMITTED.

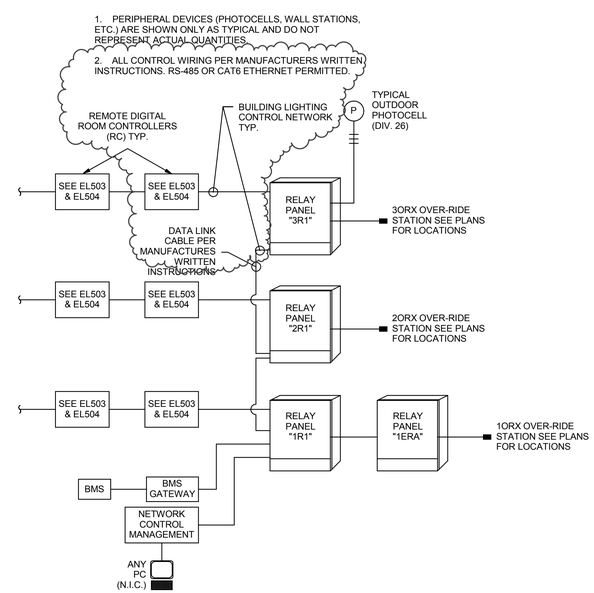

A4 LIGHTING CONTROL SCHEMATIC

SCALE: NTS

CRSA

649 E. South Temple
Salt Lake City, UT 84102
801.355.5915

MWL

11798 N. Lakeridge Pkwy.
Ashland, VA 23005
804-228-7473

State of Utah
Department of Administrative Services

Division of Facilities
Construction & Management
4110 State Office Building
Salt Lake City, Utah 84114
Phone: (801) 538 - 3018
Fax: (801) 538 - 3267

DFCM APPROVAL STAMP

LICENSED PROFESSIONAL ENGINEER
No. 181563
DAVID E. WESEMANN
04-21-2014
STATE OF UTAH

ARCHITECT-ENGINEER STAMP

Unified State Laboratory Module 2

4451 South 2700 West,
Taylorsville, UT 84118

DFCM #:	13020300
Project #:	B13-024

DATE:	ISSUE TYPE:
April 21, 2014	BID SET

MARK	DATE	DESCRIPTION
2	May 20, 2015	ADDENDUM #3

CHECKED BY	D. WESEMANN
DRAWN BY	DLM

LIGHTING DETAILS AND DIAGRAMS

EL502

VOLUME 2

C:\Users\jpm\Desktop\Revit Local Files\20130213032Elec Central_jpm.rvt
5/20/2015 5:51:54 PM

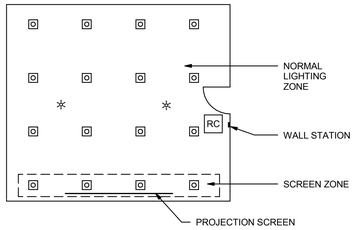

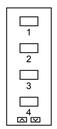

WALL STATION CONTROL MATRIX

BUTTON	NORMAL ZONE	SCREEN ZONE	SWITCH LABEL
1	OFF	X	LECTURE
2	X	X	MEETING
3	X	OFF	PRESENTATION
4	OFF	OFF	OFF

SWITCHING SEQUENCE

WS-8 - CONFERENCE ROOM W/OUT DAYLIGHT ZONE
- PUSH 1:
  - NORMAL ZONE: ALWAYS OFF.
  - SCREEN ZONE: ALWAYS ON.
- PUSH 2:
  - NORMAL ZONE: ALWAYS ON.
  - SCREEN ZONE: ALWAYS ON.
- PUSH 3:
  - NORMAL ZONE: ALWAYS ON.
  - SCREEN ZONE: ALWAYS OFF.
- PUSH 4:
  - NORMAL ZONE: ALWAYS OFF.
  - SCREEN ZONE: ALWAYS OFF.
- AUTOMATIC OFF:
  -W/VACANCY SENSOR:
  AUTO-ON ALLOWED FOR TIME DELAY OF 1 MINUTE AFTER AUTO-OFF

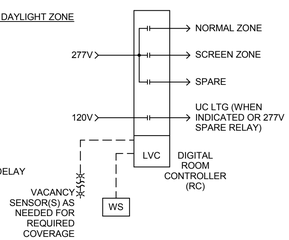

WS-8

C1 CONFERENCE ROOM W/ NORMAL LIGHTING ZONES

SCALE: NTS

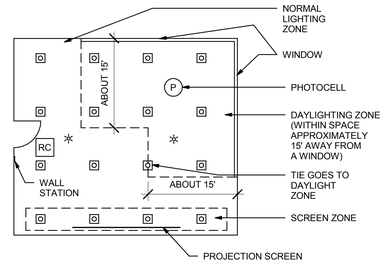

WALL STATION CONTROL MATRIX

BUTTON	DAYLIGHT ZONE	NORMAL ZONE	SCREEN ZONE	SWITCH LABEL
1	OFF	OFF	X	LECTURE
2	X	X	X	MEETING
3	X	X	OFF	PRESENTATION
4	OFF	OFF	OFF	OFF

SWITCHING SEQUENCE

WS-7 - CONFERENCE ROOM W/DAYLIGHT ZONE
- PUSH 1:
  - DAYLIGHT ZONE: ALWAYS OFF.
  - NORMAL ZONE: ALWAYS OFF.
  - SCREEN ZONE: ALWAYS ON.
- PUSH 2:
  - DAYLIGHT ZONE: ALWAYS ON WITH PHOTOCELL SUPERVISION.
  - NORMAL ZONE: ALWAYS ON.
  - SCREEN ZONE: ALWAYS ON.
- PUSH 3:
  - DAYLIGHT ZONE: ALWAYS ON WITH PHOTOCELL SUPERVISION.
  - NORMAL ZONE: ALWAYS ON.
  - SCREEN ZONE: ALWAYS OFF.
- PUSH 4:
  - DAYLIGHT ZONE: ALWAYS OFF.
  - NORMAL ZONE: ALWAYS OFF.
  - SCREEN ZONE: ALWAYS OFF.
- AUTOMATIC OFF: 1W/VACANCY SENSOR
  - AUTO-ON ALLOWED FOR TIME DELAY OF 1 MINUTE AFTER AUTO-OFF

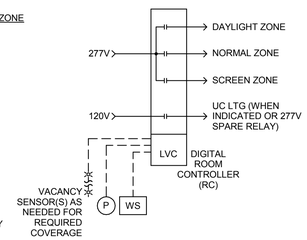

WS-7

C2 CONFERENCE ROOM LIGHTING ZONES

SCALE: NTS

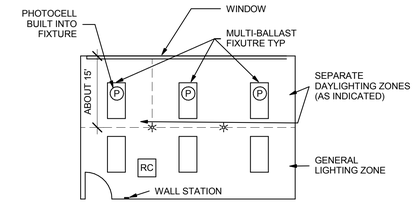

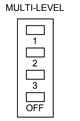

LAB AREA
GENERAL LIGHTING ZONE
- NO DAY LIGHTING.

SWITCHING SEQUENCE
WS-5 - LAB AREA W/OUT DAYLIGHT ZONE
- MANUAL ON/OFF:
- AUTOMATIC OFF - W/VACANCY SENSOR; AUTO-ON ALLOWED FOR TIME DELAY OF 1 MINUTE AFTER AUTO-OFF.

DAYLIGHTING ZONE
- DAYLIGHTING.

SWITCHING SEQUENCE
WS-6 - LAB AREA W/DAYLIGHT ZONE
- MANUAL ON - ON WITH PHOTOCELL SUPERVISION MULTI-LEVEL CONTROL TO MAINTAIN 100 FC.
- MANUAL OFF: ALWAYS OFF.
- AUTO OFF: RESETS (ALL) WS-6 TO OFF W/VACANCY SENSOR; AUTO-ON ALLOWED FOR TIME DELAY OF 1 MINUTE AFTER AUTO-OFF

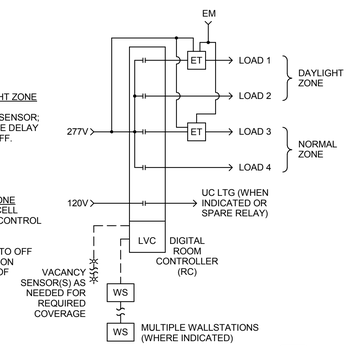

WS-5
WS-6

C3 LAB AREA INTERIOR LIGHTING ZONE

SCALE: NTS

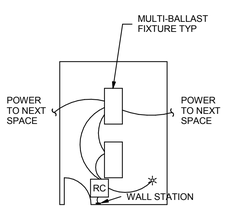

PRIVATE OFFICE OR OPEN OFFICE
- NO DAY LIGHTING.

SEQUENCE OF OPERATION
- MANUAL ON/OFF.
- AUTOMATIC OFF: W/VACANCY SENSOR; AUTO-ON ALLOWED FOR TIME DELAY OF 1 MINUTE AFTER AUTO-OFF
- AUTOMATIC ON: FIELD SELECTABLE FOR NONE OR 50%.

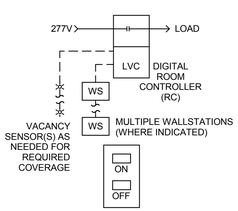

SWITCHING SEQUENCE

WS-1 - TYPICAL OFFICE/ROOM
- PUSH ON/OFF
- AUTO OFF RESETS WS TO OFF

SWITCHING SEQUENCE

WS-1d - TYPICAL ROOM W/DOWNLIGHTS
- PUSH ON/OFF
- DIMMING ARROWS:
  UP ARROW - INCREASES LIGHT OUTPUT
  DOWN ARROW - DECREASES LIGHT OUTPUT.
- AUTOMATIC OFF: W/VACANCY SENSOR:
  AUTO-ON ALLOWED FOR TIME DELAY OF 1 MINUTE AFTER AUTO-OFF

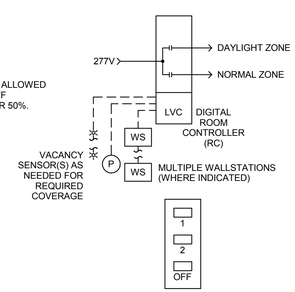

SWITCHING SEQUENCE

WS-1p - TYPICAL ROOM W/DAYLIGHTING
- PUSH 1: ALWAYS DAYLIGHT ZONE ON WITH PHOTOCELL SUPERVISION; MULTI-LEVEL CONTROL TO MAINTAIN 50FC.
- PUSH 2: ALWAYS NORMAL ZONE ON.
- PUSH OFF: ALL ALWAYS OFF.
- AUTOMATIC OFF: W/VACANCY SENSOR;
  AUTO-ON ALLOWED FOR TIME DELAY OF 1 MINUTE AFTER AUTO-OFF.

WS-1
WS-1d
WS-1p

A1 TYPICAL OFFICE/ROOM SWITCHING DETAIL

SCALE: NTS

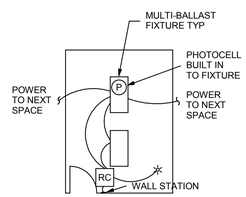

PRIVATE OFFICE W/ DAY LIGHTING
SEQUENCE OF OPERATION:
- MANUAL ON: ON WITH PHOTOCELL SUPERVISION.
  - MULTI-LEVEL CONTROL TO MAINTAIN 50FC.
- MANUAL OFF: ALWAYS OFF.
- AUTO OFF: W/VACANCY SENSOR; AUTO-ON ALLOWED FOR TIME DELAY OF 1 MINUTE AFTER AUTO-OFF.
- AUTOMATIC ON: FIELD SELECTABLE FOR NONE OR 50%.

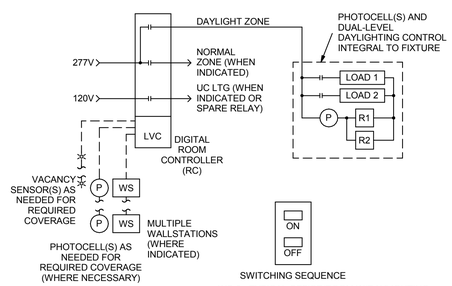

SWITCHING SEQUENCE

WS-2 - TYPICAL OFFICE/ROOM W/DAYLIGHTING
- PUSH ON: ON WITH PHOTOCELL SUPERVISION
- PUSH OFF: ALWAYS OFF
- AUTO OFF: RESETS WS-2 TO OFF

A3 TYPICAL OFFICE/ROOM W/DAYLIGHTING SWITCHING DETAIL

SCALE: NTS

WS-2

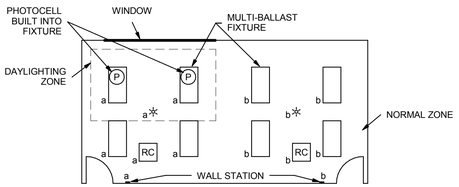

LARGE OPEN OFFICE SPACE
- NO DAY LIGHTING

SEQUENCE OF OPERATION:
- MANUAL ON/OFF:
- AUTOMATIC OFF: W/VACANCY SENSOR; AUTO-ON ALLOWED FOR TIME DELAY OF 1 MINUTE AFTER AUTO-OFF.
- AUTOMATIC ON:
  - FIELD SELECTABLE AUTO ON 33% OR 50%

OR

  - NO AUTO ON

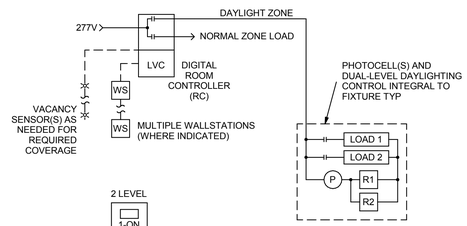

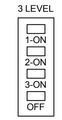

SWITCHING SEQUENCE
WS-4 - LARGE 3 LEVEL OPEN OFFICE LIGHTS
- PUSH 1: ALWAYS 1/3 (1) ON.
- PUSH 2: ALWAYS 1/3 (2) ON.
- PUSH 3: ALWAYS 1/3 (3) ON.
- PUSH OFF: ALWAYS OFF.
- AUTO OFF: RESETS WS-4 TO OFF.

SWITCHING SEQUENCE
WS-3 - LARGE 2 LEVEL OPEN OFFICE LIGHTS
- PUSH 1: ALWAYS 1/2 (1) ON.
- PUSH 2: ALWAYS 1/2 (2) ON.
- PUSH OFF: ALWAYS OFF.
- AUTO OFF: RESETS WS-3 TO OFF.

A4 LARGE OPEN OFFICE SWITCHING DETAIL

SCALE: NTS

WS-3
WS-4

GENERAL SHEET NOTES

1. CONTROL SYSTEMS AND RELAY PACK USED INTERCHANGEABLY; SYSTEM FUNCTIONALITY MUST BE PROVIDED REGARDLESS OF DRAWING NOMENCLATURE.
2. ALL CONTROLS TO COMPLY WITH ASHRAE 90.1 (2007).
3. LIGHTING CONTROL TOPOLOGY MUST SUPPORT PASSING LIGHTING CONTROL NETWORK INFORMATION IN NORMAL AND EMERGENCY MODES.

CRSA
649 E. South Temple
Salt Lake City, UT 84102
801.355.5915

M1WL
11798 N. Lakeridge Pkwy.
Ashland, VA 23005
804-228-7473

State of Utah
Department of Administrative Services
Division of Facilities Construction & Management
4110 State Office Building
Salt Lake City, Utah 84114
Phone: (801) 538 - 3018
Fax: (801) 538 - 3267

DFCM APPROVAL STAMP

ARCHITECT-ENGINEER STAMP

Unified State Laboratory Module 2

4451 South 2700 West, Taylorsville, UT 84118

DFCM #: 13020300

Project #: B13-024

DATE:	ISSUE TYPE:
April 21, 2014	BID SET

MARK	DATE	DESCRIPTION
2	May 20, 2015	ADDENDUM #3

CHECKED BY: D. WESEMANN

DRAWN BY: DLM

LIGHTING CONTROL DIAGRAMS

2

EL503

VOLUME 2

C:\Users\jpm\Desktop\Revit Local Files\2013\20130362\Elec Central_jpm.rvt
5/20/2015 5:51:58 PM

GENERAL SHEET NOTES

1. CONTROL SYSTEMS AND RELAY PACK USED INTERCHANGEABLY; SYSTEM FUNCTIONALITY MUST BE PROVIDED REGARDLESS OF DRAWING NOMENCLATURE.
2. ALL CONTROLS TO COMPLY WITH ASHRAE 90.1 (2007).
3. LIGHTING CONTROL TOPOLOGY MUST SUPPORT PASSING LIGHTING CONTROL NETWORK INFORMATION IN NORMAL AND EMERGENCY MODES.

CRSA
649 E. South Temple
Salt Lake City, UT 84102
801.355.5915

M1WL
11798 N. Lakeridge Pkwy.
Ashland, VA 23005
804-228-7473

State of Utah
Department of Administrative Services
Division of Facilities Construction & Management
4110 State Office Building
Salt Lake City, Utah 84114
Phone: (801) 538 - 3018
Fax: (801) 538 - 3267

DFCM APPROVAL STAMP

ARCHITECT-ENGINEER STAMP

Unified State Laboratory Module 2

4451 South 2700 West, Taylorsville, UT 84118

DFCM #:	13020300
Project #:	B13-024

DATE:	ISSUE TYPE:
April 21, 2014	BID SET

MARK	DATE	DESCRIPTION
2	May 20, 2015	ADDENDUM #3

CHECKED BY	D. WESEMANN
DRAWN BY	DLM

LIGHTING CONTROL DIAGRAMS

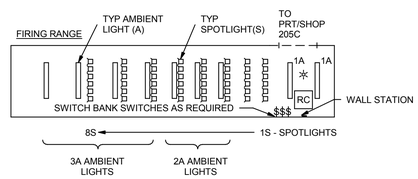

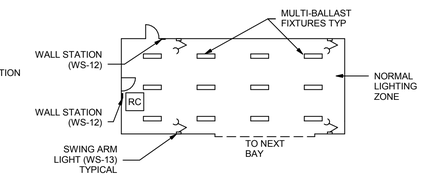

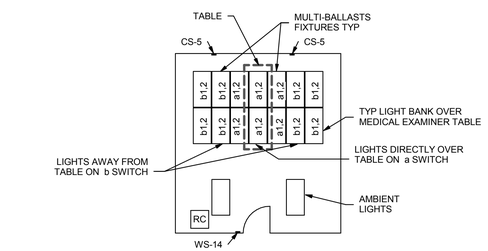

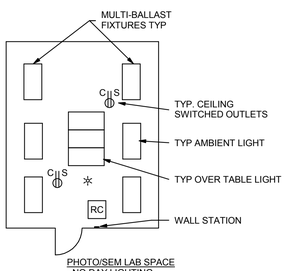

PHOTO/SEM LAB SPACE
- NO DAY LIGHTING

SEQUENCE OF OPERATION:
- MANUAL ON/OFF.
- AUTOMATIC OFF: W/VACANCY SENSOR; AUTO-ON ALLOWED FOR TIME DELAY OF 1 MINUTE AFTER AUTO-OFF.
- AUTOMATIC ON:
  - FIELD SELECTABLE AUTO ON 33% OR 50%

OR
  - NO AUTO ON

PUSH 1: OUTLETS
PUSH 2: OVER TABLE LIGHTS
PUSH 3: AMBIENT LIGHTS

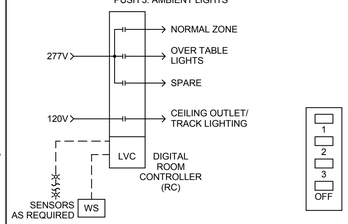

A1 PHOTO/SEM SWITCHING DETAIL

WS-10

SCALE: NTS

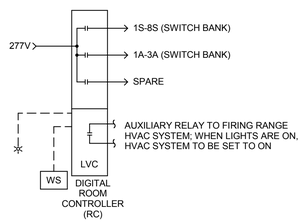

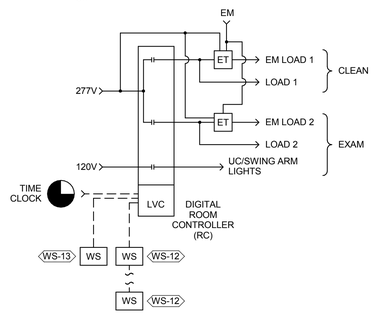

SWITCHING SEQUENCE

WS-11 FIRING RANGE LIGHTS
- PUSH 1S THRU 8S:
  LIGHT OFF - TURN LIGHT ON.
  LIGHT ON - TURN LIGHT OFF.
- PUSH S - OFF: 1S THRU 8S ALWAYS OFF.
- PUSH 1A THRU 8A:
  LIGHT OFF - TURN LIGHT ON.
  LIGHT ON - TURN LIGHT OFF.
- PUSH A - OFF: 1A THRU 8A ALWAYS OFF.
- PUSH ALL ON: 1A THRU 8A AND 1S THRU 8S ALWAYS ON.
- PUSH ALL OFF: 1A THRU 8A AND 1S THRU 8S ALWAYS OFF.
- AUTOMATIC OFF: W/VACANCY SENSOR; AUTO-ON ALLOWED FOR TIME DELAY OF 1 MINUTE AFTER AUTO-OFF.

A2 FIRING RANGE SWITCHING DETAIL

WS-11

SCALE: NTS

SWITCHING SEQUENCE

WS-12 - VEB/SALLYPORT BAY LIGHTS
- PUSH WORK: ALWAYS 1/2 (1) ON
- PUSH EXAM: ALWAYS 1/2 (2) ON.
- PUSH OFF: ALWAYS OFF.
- AUTOMATIC OFF: PRE-SET TIME CLOCK TURNS LIGHTS OFF AFTER HOURS.

SWITCHING SEQUENCE

WS-13 - SWING ARM LIGHTS
- PUSH ON: ALWAYS ON.
- PUSH OFF: ALWAYS OFF.
- AUTOMATIC OFF: PRE-SET TIME CLOCK TURNS LIGHTS OFF AFTER HOURS.

GENERAL NOTES:
1. WS-12 WALL STATIONS AT ALL EXTERIOR DOORS. WS-12 WS-13

A3 VEB/SALLY PORT LIGHTING AREAS

SCALE: NTS

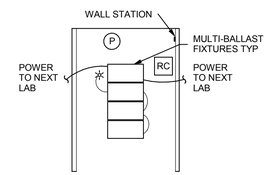

FIRE ARM LAB
- DAY LIGHTING.

SEQUENCE OF OPERATION
- MANUAL ON/OFF.
- AUTOMATIC OFF: W/VACANCY SENSOR.
- AUTOMATIC ON: FIELD SELECTABLE FOR NONE OR 50% IF DUAL SWITCHING IS SPECIFIED.

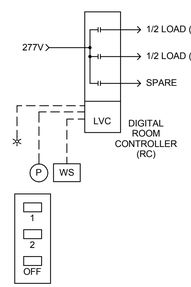

SWITCHING SEQUENCE

WS-9
- PUSH 1: ALWAYS 1/2 (1) ON.
- PUSH 2: ALWAYS 1/2 (2) ON.
- PUSH OFF: ALWAYS OFF.
- AUTO OFF: W/VACANCY SENSOR; AUTO-ON ALLOWED FOR TIME DELAY OF 1 MINUTE AFTER AUTO-OFF

A4 FA LABS SWITCHING DETAIL

WS-9

SCALE: NTS

AUTOPSY AND MEDICAL EXAMINER SPACES

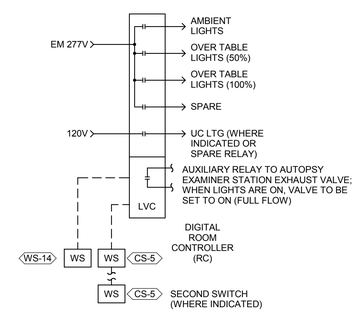

SWITCHING SEQUENCE

CS-5
- PUSH 1: ALWAYS 1/2 (a1) ON.
- PUSH 2: ALWAYS 1/2 (a2) ON.
- PUSH 3: ALWAYS 1/2 (b1) ON.
- PUSH 4: ALWAYS 1/2 (b2) ON.
- PUSH OFF: ALWAYS ALL (a1,2; b1,2) OFF.

SWITCHING SEQUENCE

WS-14
- PUSH ON/OFF: AMBIENT LIGHTS ALWAYS ON OR OFF
- PUSH ALL OFF: ALL LIGHTS (INCLUDING LIGHTS OVER MEDICAL EXAMINER TABLE) ALWAYS OFF.

A5 AUTOPSY AND MEDICAL EXAMINER DETAIL

CS-5 WS-14

SCALE: NTS

EL504
VOLUME 2

C:\Users\jpm\Desktop\Revit Local Files\2013\2013\0362Elec Central_jpm.rvt
5/20/2015 5:52:01 PM

RELAY PANEL: 1ERA

LOCATION: ELECTRICAL 100M

CONTROL SCHEDULE

UL 1008 RELAY PANEL

RELAY #	DESCRIPTION	LOCATION	BRANCH CIRCUIT	LOAD (WATTS)	CNTL SWITCH	OCC SENSOR	TIME CLOCK	PHOTOCELL
1	LTG: STAIR-1 100B (1ERA-1)	STAIR 1 100B	**1EH-2**	225			X	
2	LTG: STAIR-2 100P (1ERA-2)	STAIR 2 100P	**1EH-4**	360			X	
3	LTG: STAIR-3 100J (1ERA-3)	STAIR 3 100J	**1EH-6**	135			X	
4	LTG: LEVEL 1 CORRIDOR (1ERA-4)	LEVEL 1 HALL 100	**1EH-8**	2024		X (NOTE 1)	X (NOTE 1)	
5	LTG: LEVEL 2 CORRIDOR (1ERA-5)	LEVEL 2 HALL 200	**1EH-10**	1130		X (NOTE 1)	X (NOTE 1)	
6	LTG: LEVEL 3 CORRIDOR (1ERA-6)	LEVEL 3 HALL 300	**1EH-12**	560		X (NOTE 1)	X (NOTE 1)	
7	LTG: NE EXT LIGHTS (1ERA-7)	NE EXTERIOR OF BLDG	**1EH-14**	850			X	X
8	LTG: VEB/WAREHOUSE (1ERA-8)	LEVEL 1 NORTH EM	**1EH-18**	1282	WS-12			
9	LTG: AUTOPSY WORK STN (1ERA-9)	AUTOPSY ROOM 124	**1EH-5**	1728	CS-5, WS-14			
10	LTG: AUTOPSY WORK STN (1ERA-10)	AUTOPSY ROOM 124	**1EH-7**	1728	CS-5, WS-14			
11	LTG: AUTOPSY WORK STN (1ERA-11)	AUTOPSY ROOM 124	**1EH-9**	1728	CS-5, WS-14			
12	LTG: AUTOPSY WORK STN (1ERA-12)	AUTOPSY ROOM 124	**1EH-11**	1728	CS-5, WS-14			
13	LTG: AUTOPSY WORK STN (1ERA-13)	AUTOPSY ROOM 124	**1EH-13**	1728	CS-5, WS-14			
14	LTG: AUTOPSY WORK STN (1ERA-14)	AUTOPSY ROOM 124	**1EH-15**	1728	CS-5, WS-14			
15	LTG: AUTOPSY WORK STN (1ERA-15)	AUTOPSY ROOM 124	**1EH-17**	1728	CS-5, WS-14			
16	LTG: AUTOPSY WORK STN (1ERA-16)	AUTOPSY ROOM 124	**1EH-19**	1728	CS-5, WS-14			
17	LTG: AUTOPSY WORK STN (1ERA-17)	AUTOPSY ROOM 124	**1EH-21**	1728	CS-5, WS-14			
18	LTG: AUTOPSY WORK STN (1ERA-18)	AUTOPSY ROOM 124	**1EH-23**	2160	CS-5, WS-14			
19	LTG: AUTOPSY WORK STN (1ERA-19)	AUTOPSY ROOM 124	**1EH-25**	1728	CS-5, WS-14			
20	LTG: AUTOPSY WORK STN (1ERA-20)	AUTOPSY ROOM 124	**1EH-27**	2160	CS-5, WS-14			
21	LTG: SPEC WORK STN (1ERA-21)	SPECIAL PROCEDURE AUTOSPY 124A	**1EH-29**	2160	CS-5, WS-14			
22	LTG: SPEC WORK STN (1ERA-22)	SPECIAL PROCEDURE AUTOSPY 124A	**1EH-31**	1728	CS-5, WS-14			
23	LTG: AMBIENT SPEC PRC (1ERA-23)	SPECIAL PROCEDURE AUTOSPY 124A	**1EH-41**	432	WS-14			
24	LTG: TISSUE REC WRK STN...	TISSUE RECOVERY 123	**1EH-22**	1296	CS-5, WS-14			
25	LTG: TISSUE REC WRK STN...	TISSUE RECOVERY 123	**1EH-24**	864	CS-5, WS-14			
26	LTG: TISSUE REC AMBIENT (1ERA-26)	TISSUE RECOVERY 123	**1EH-26**	432	WS-14			
27	SPARE	--	--	--	--	--	--	--
28	SPARE	--	--	--	--	--	--	--
29	SPARE	--	--	--	--	--	--	--
30	SPARE	--	--	--	--	--	--	--
31	SPARE	--	--	--	--	--	--	--
32	SPARE	--	--	--	--	--	--	--
33	SPARE	--	--	--	--	--	--	--
34	SPARE	--	--	--	--	--	--	--
35	SPARE	--	--	--	--	--	--	--
36	SPARE	--	--	--	--	--	--	--
37	SPARE	--	--	--	--	--	--	--
38	SPARE	--	--	--	--	--	--	--
39	SPARE	--	--	--	--	--	--	--
40	SPARE	--	--	--	--	--	--	--
41	SPARE	--	--	--	--	--	--	--
42	SPARE	--	--	--	--	--	--	--
43	SPARE	--	--	--	--	--	--	--
44	SPARE	--	--	--	--	--	--	--
45	SPARE	--	--	--	--	--	--	--
46	SPARE	--	--	--	--	--	--	--
47	SPARE	--	--	--	--	--	--	--
48	SPARE	--	--	--	--	--	--	--

Notes:
1. DURING DAYTIME OPERATING HOURS , TIME CLOCK OVERRIDES OCCUPANCY SENSORS AND HOLDS ALL CORRIDOR LIGHTS ON. AFTER HOURS, OCCUPANCY SENSORS CONTROL CORRIDOR LIGHTING AS REQUIRED.
2. PANEL REQUIRES PROGRAMMABLE GROUPING OF 28 DISTINCT GROUPS.

RELAY PANEL: 2RB

LOCATION: ELECTRICAL 200D

CONTROL SCHEDULE

UL 1008 RELAY PANEL

RELAY #	DESCRIPTION	LOCATION	BRANCH CIRCUIT	LOAD (WATTS)	CNTL SWITCH	OCC SENSOR	TIME CLOCK	PHOTOCELL
1	LTG: LVL 2 HALL 200 (2RB-1)	LEVEL 2 HALL 200	**2HB-2**	1039		X (NOTE 1)	X (NOTE 1)	
2	SPARE	--	--	--	--	--	--	--
3	SPARE	--	--	--	--	--	--	--
4	SPARE	--	--	--	--	--	--	--
5	SPARE	--	--	--	--	--	--	--
6	SPARE	--	--	--	--	--	--	--
7	SPARE	--	--	--	--	--	--	--
8	SPARE	--	--	--	--	--	--	--
9	SPARE	--	--	--	--	--	--	--
10	SPARE	--	--	--	--	--	--	--
11	SPARE	--	--	--	--	--	--	--
12	SPARE	--	--	--	--	--	--	--
13	SPACE	--	--	--	--	--	--	--
14	SPACE	--	--	--	--	--	--	--
15	SPACE	--	--	--	--	--	--	--
16	SPACE	--	--	--	--	--	--	--

Notes:
1. DURING DAYTIME OPERATING HOURS , TIME CLOCK OVERRIDES OCCUPANCY SENSORS AND HOLDS ALL CORRIDOR LIGHTS ON. AFTER HOURS, OCCUPANCY SENSORS CONTROL CORRIDOR LIGHTING AS REQUIRED.

RELAY PANEL: 1RB

LOCATION: ELECTRICAL 100L

CONTROL SCHEDULE

UL 1008 RELAY PANEL

RELAY #	DESCRIPTION	LOCATION	BRANCH CIRCUIT	LOAD (WATTS)	CNTL SWITCH	OCC SENSOR	TIME CLOCK	PHOTOCELL
1	LTG: LEVEL 1 HALL 100K (1RB-1)	LEVEL 1 HALL 100K	**1HB-2**	2728		X (NOTE 1)	X (NOTE 1)	
2	LTG: EXTERIOR CANOPY (1RB-2)	NE LIGHTS	**1HB-4**	0			X	X
3	LTG: NW EXTERIOR LIGHTS (1RB-3)	NORTH AND WEST EXTERIOR OF BLDG	**1HB-6**	360			X	X
4	LTG: DRIVEWAY SITE LIGHTS (1RB-4)	PARKING LOT AND LAB DRIVEWAY	**1HB-8**	1360				X
5	LTG: DRIVEWAY SITE LIGHTS (1RB-5)	PARKING LOT AND LAB DRIVEWAY	**1HB-10**	1700				X
6	LTG: DRIVEWAY SITE LIGHTS (1RB-6)	PARKING LOT AND LAB DRIVEWAY	**1HB-12**	1360				X
7	LTG: BACK PRKNG CANOPY (1RB-7)	PARKING CANOPIES AND VEHICLE...	**1HB-14**	960			X	X
8	LTG: AMBIENT AUTOPSY 124 (1RB-8)	AUTOPSY 124	**1HB-22**	2376	WS-14			
9	SPARE	--	--	--	--	--	--	--
10	SPARE	--	--	--	--	--	--	--
11	SPARE	--	--	--	--	--	--	--
12	SPARE	--	--	--	--	--	--	--
13	SPACE	--	--	--	--	--	--	--
14	SPACE	--	--	--	--	--	--	--
15	SPACE	--	--	--	--	--	--	--
16	SPACE	--	--	--	--	--	--	--

Notes:
1. DURING DAYTIME OPERATING HOURS , TIME CLOCK OVERRIDES OCCUPANCY SENSORS AND HOLDS ALL CORRIDOR LIGHTS ON. AFTER HOURS, OCCUPANCY SENSORS CONTROL CORRIDOR LIGHTING AS REQUIRED.

RELAY PANEL: 3RB

LOCATION: ELECTRICAL 300F

CONTROL SCHEDULE

UL 1008 RELAY PANEL

RELAY #	DESCRIPTION	LOCATION	BRANCH CIRCUIT	LOAD (WATTS)	CNTL SWITCH	OCC SENSOR	TIME CLOCK	PHOTOCELL
1	LTG: LEVEL 3 CORRIDOR (3RB-1)	LEVEL 3 HALL 300	**3HB-2**	959		X (NOTE 1)	X (NOTE 1)	
2	LTG: LEVEL 3 BALCONY (3RB-2)	LEVEL 3 BALCONY	**3HB-4**	220	X		X	
3	SPARE	--	--	--	--	--	--	--
4	SPARE	--	--	--	--	--	--	--
5	SPARE	--	--	--	--	--	--	--
6	SPARE	--	--	--	--	--	--	--
7	SPARE	--	--	--	--	--	--	--
8	SPARE	--	--	--	--	--	--	--
9	SPARE	--	--	--	--	--	--	--
10	SPARE	--	--	--	--	--	--	--
11	SPARE	--	--	--	--	--	--	--
12	SPARE	--	--	--	--	--	--	--
13	SPACE	--	--	--	--	--	--	--
14	SPACE	--	--	--	--	--	--	--
15	SPACE	--	--	--	--	--	--	--
16	SPACE	--	--	--	--	--	--	--

Notes:
1. DURING DAYTIME OPERATING HOURS , TIME CLOCK OVERRIDES OCCUPANCY SENSORS AND HOLDS ALL CORRIDOR LIGHTS ON. AFTER HOURS, OCCUPANCY SENSORS CONTROL CORRIDOR LIGHTING AS REQUIRED.

CRSA
649 E. South Temple
Salt Lake City, UT 84102
801.355.5915

MWL
11798 N. Lakeridge Pkwy.
Ashland, VA 23005
804-228-7473

State of Utah
Department of Administrative Services
DFCM
Division of Facilities Construction & Management
4110 State Office Building
Salt Lake City, Utah 84114
Phone: (801) 538 - 3018
Fax: (801) 538 - 3267

DFCM APPROVAL STAMP

LICENSED PROFESSIONAL ENGINEER
No. 181563
DAVID E. WESEMANN
04-21-2014
STATE OF UTAH

ARCHITECT-ENGINEER STAMP

Unified State Laboratory Module 2

4451 South 2700 West, Taylorsville, UT 84118

DFCM #: 13020300

Project #: B13-024

DATE:	ISSUE TYPE:
April 21, 2014	BID SET

MARK	DATE	DESCRIPTION
2	May 20, 2015	ADDENDUM #3

CHECKED BY: D. WESEMANN

DRAWN BY: DLM

RELAY PANEL SCHEDULES

EL505

VOLUME 2

C:\Users\jpm\Desktop\Revit Local Files\2013\2013030\2Elec Central_jpm.rvt
5/20/2015 6:26:00 PM

LIGHTING FIXTURE SCHEDULE

NOTE TO BIDDERS: COMPLY WITH ALL OF THE SPECIFICATIONS.
REFER TO SPECIFICATIONS FOR IMPORTANT TECHNICAL REQUIREMENTS FOR LIGHTING FIXTURES, BALLASTS, AND LAMPS. THE CATALOG NUMBERS LISTED BELOW HAVE BEEN CAREFULLY PREPARED TO ASSIST BIDDERS IN SELECTING PRODUCTS TO ACHIEVE THE DESIGN CONCEPT, HOWEVER, PRIOR TO BIDDING, EACH MANUFACTURER SHALL COMPARE THE CATALOG NUMBERS SHOWN WITH THE DESCRIPTION AND REQUIREMENTS ON THE DRAWINGS, AND SHALL NOTIFY THE ARCHITECT/ENGINEER OF ANY DISCREPANCIES. SPECIFICALLY INCLUDED IN THIS EVALUATION SHALL BE THE VERIFYING OF PROPER MOUNTING KITS OR ACCESSORIES TO FACILITATE INSTALLATION AS SHOWN AT EACH LOCATION ON THE DRAWINGS. NO ALLOWANCE OR REDRESS WILL BE ALLOWED FOR DISCREPANCIES THAT WERE NOT REPORTED TO THE ARCHITECT/ENGINEER IN TIME FOR CORRECTION OR CLARIFICATION BEFORE THE BID. THE REPORTING OF ANY AMBIGUITY IS THE RESPONSIBILITY OF THE BIDDER. PROVIDE UNIT PRICES AND FIXTURE BRAND SELECTED FOR ADD/DELETE CHANGES FOR EACH FIXTURE TYPES SHOWN WITHIN 5 BUISINESS DAYS OF NOTICE TO PROCEED. FAILURE TO COMPLY WITH THIS REQUIREMENT MAY DISQUALIFY THE PRODUCTS AND EMPOWER THE ENGINEER TO DETERMINE FAIR VALUE FOR FIXTURE AND INSTALLATION CHANGES, WITHOUT FURTHER INPUT FROM THE CONTRACTOR OR INSTALLER. SUBMITTAL PACKAGE SHALL INCLUDE LAMP MANUFACTURER AND CATALOG NUMBER ON EACH FIXTURE SHEET. ON ALL PENDANT MOUNTED FIXTURES, PROVIDE A SECOND SET OF PENDANTS, OF A DIFFERENT LENGTH, AS DIRECTED BY THE ARCHITECT/ENGINEER, PROVIDED AND INSTALLED AT NO ADDITIONAL CHARGE. ALL FIXTURES SHALL BE APPROVED BY UL OR ANOTHER ACCEPTABLE TESTING LAB FOR THE PURPOSE INTENDED AND WITH THE LAMP AND BALLAST PROPOSED. CONTRACTOR ALLOWANCE PRICES ARE ACCURATE WHEN THIS JOB WAS SPECIFIED, CONTRACTOR AND ELECTRICAL DISTRIBUTOR SHALL VERIFY THIS ALLOWANCE AND REPORT ANY PROBLEMS TO THE ENGINEER BEFORE THE BID. ALLOWANCE PRICE MAY OR MAY NOT INCLUDE LAMP(S) OR FREIGHT AS NOTED, AND DO NOT INCLUDE ANY TAXES. UNIVERSAL VOLTAGE (120/277) BALLASTS REQUIRED UNLESS NOTED OTHERWISE. DIMENSION SEQUENCE = (LENGTH X WIDTH X DEPTH) IN INCHES.

SYMBOL	MARK	FIXTURE CHARACTERISTICS BODY / AIR / MOUNTING / DOOR LENS/LOUVER/REFLECTOR/OTHER	LAMP	WATTS	VOLTS	MANUFACTURER	CATALOG NUMBER	NOTES
	CM	EXTRUDED ALUMINUM FIXTURES: LENGTHS AND CONFIGURATIONS SHOWN ON THE DRAWINGS; LAMPS FOUR FOOT WHERE POSSIBLE; PROGRAMMED START ELECTRONIC BALLASTS; T8 LAMPS; INTERNAL CONCEALED FASTENERS; CAST ELBOWS AND FITTINGS; COLOR AS NOTED AND/OR APPROVED BY ARCHITECT; ORIENT FIXTURE ACCORDING TO ARCHITECTS/ENGINEER'S INSTRUCTIONS. FIXTURES WITH PHOTOCELS SHALL HAVE UNIFORM SWITCHING INTERNAL TO THE LUMINAIRE. WIRED FOR UNIFORM MULTILEVEL SWITCH WITHIN EACH FIXTURE. LUMENS PER 4' MODULE						
	CM-12	12' SUSPENDED LINEAR PENDANT; 70/30 OPTIC; 1 LAMP CROSS SECTION; .71 BF	3F32T8 3100LU 4100K	74W	UNV	CORELITE AXIS PINNACLE PEERLESS	J2SM-T8-1-C277-A-C-120-XX-12-5LTVS-DL6 CU-S-12-T8-1-X-0-3-UNV-ERS-1-C-.71BF L8A-1T8-12-XX-AC48GX-UNV-1C-W BRM9-1-32-SPR-70/30-SSH-X-R12-277-GEB10PS-SCT-L/LP-F1/24-C210-ACG	
	CM-12P	12' SUSPENDED LINEAR PENDANT; 70/30 OPTIC; 1 LAMP CROSS SECTION; INTEGRAL PHOTOCELL; MULTI-BALLAST; .71BF INTERNAL SWITCHING	3F32T8 3100LU 4100K	72W	UNV	CORELITE AXIS PINNACLE PEERLESS	J2SM-T8-1-C277-A-C-120-XX-12-5LTVS-DS-DL6 CU-S-12-T8-1-X-0-3-UNV-ERS-1-C-DSX-.71BF L8A-1T8-12-XX-AC48GX-UNV-1C-W-DSM BRM9-1-32-SPR-70/30-SSH-X-R12-277-GEB10PS-SCT-L/LP-F1/24-C210-ACG-PDT	
	CM-14	4' SUSPENDED LINEAR PENDANT; 70/30 OPTIC; 1 LAMP CROSS SECTION; .71BF	1F32T8 3100LU 4100K	26W	UNV	CORELITE AXIS PINNACLE PEERLESS	J2SM-T8-1-C277-A-C-120-XX-4-5LTVS-DL6 CU-S-4-T8-1-X-0-3-UNV-ERS-1-C-.71BF L8A-1T8-4-XX-AC48GX-UNV-1C-W BRM9-1-32-SPR-70/30-SSH-X-R4-277-GEB10PS-SCT-L/LP-F1/24-C210-ACG	
	CM-18	8' SUSPENDED LINEAR PENDANT; 70/30 OPTIC; 1 LAMP CROSS SECTION; .71BF	2F32T8 3100LU 4100K	46W	UNV	CORELITE AXIS PINNACLE PEERLESS	J2SM-T8-1-C277-A-C-120-XX-8-5LTVS-DS-DL6 CU-S-8-T8-1-X-0-3-UNV-ERS-1-C-.71BF L8A-1T8-8-XX-AC48GX-UNV-1C-W BRM9-1-32-SPR-70/30-SSH-X-R8-277-GEB10PS-SCT-L/LP-F1/24-C210-ACG	
	CM-18P	8' SUSPENDED LINEAR PENDANT; 70/30 OPTIC; 1 LAMP CROSS SECTION; INTEGRAL PHOTOCELL; MULTI-BALLAST; .71BF INTERNAL SWITCHING	2F32T8 3100LU 4100K	52W	UNV	CORELITE AXIS PINNACLE PEERLESS	J2SM-T8-1-C277-A-C-120-XX-8-5LTVS-DS-DL6 CU-S-8-T8-1-X-0-3-UNV-ERS-1-C-DSX-.71BF L8A-1T8-8-XX-AC48GX-UNV-1C-W-DSM BRM9-1-32-SPR-70/30-SSH-X-R8-277-GEB10PS-SCT-L/LP-F1/24-C210-ACG-PDT	
	CM-32	12' SUSPENDED LINEAR PENDANT; 70/30 OPTIC; 3 LAMP CROSS SECTION; .71BF	9F32T8 3100LU 4100K	222W	UNV	CORELITE AXIS PINNACLE PEERLESS	J2SM-T8-3-C277-A-C-120-XX-12-5LTVS-DL6 CU-S-12-T8-3-X-0-3-UNV-ERS-1-C-.71BF L8A-3T8-12-XX-AC48GX-UNV-1C-W BRM9-3-32-SPR-70/30-SSH-X-R12-277-GEB10PS-SCT-L/LP-F1/24-C210-ACG	
	CM-32H	12' SUSPENDED LINEAR PENDANT; 70/30 OPTIC; 3 LAMP CROSS SECTION; MULITPLE BALLASTS; 1.36BF	9F32T8 2000LU 4100K 90 CRI	454W	UNV	CORELITE AXIS PINNACLE PEERLESS	J2SM-T8-3-C277-A-C-120-XX-12-SPECPSEB-DL6 CU-S-12-T8-3-X-0-3-UNV-ERS-1-C-1.36BF L8A-3T8-12-XX-AC48GX-UNV-1C-W-1.36BF BRM9-3-32-SPR-70/30-SSH-X-R12-277-GEB10PS-SCT-L/LP-F1/24-C210-ACG-1.36BF	
	CM-32P	12' SUSPENDED LINEAR PENDANT; 70/30 OPTIC; 3 LAMP CROSS SECTION; INTEGRAL PHOTOCELL; 3 BALLASTS; .71BF; INTERNAL SWITCHING, DUAL SWITCHED BY PHOTOCELL	9F32T8 3100LU 4100K	222W	UNV	CORELITE AXIS PINNACLE PEERLESS	J2SM-T8-3-C277-A-C-120-XX-12-5LTVS-DS-DL6 CU-S-12-T8-3-X-0-3-UNV-ERS-1-C-DSX-.71BF L8A-3T8-12-XX-AC48GX-UNV-1C-W-DSM BRM9-3-32-SPR-70/30-SSH-X-R12-277-GEB10PS-SCT-L/LP-F1/24-C210-ACG-PDT	
	CM-32PH	12' SUSPENDED LINEAR PENDANT; 70/30 OPTIC; 3 LAMP CROSS SECTION; INTEGRAL PHOTOCELL; MULITPLE BALLASTS; 1.36BF INTERNAL SWITCHING	9F32T8 2000LU 4100K 90 CRI	459W'	UNV	CORELITE AXIS PINNACLE PEERLESS	J2SM-T8-3-C277-A-C-120-XX-12-SPECPSEB-DS-DL6 CU-S-12-T8-3-X-0-3-UNV-ERS-1-C-DSX-1.36BF L8A-3T8-12-XX-AC48GX-UNV-1C-W-DSM-1.36BF BRM9-3-32-SPR-70/30-SSH-X-R12-277-GEB10PS-SCT-L/LP-F1/24-C210-ACG-PDT-1.36BF	
	CM-34	4' SUSPENDED LINEAR PENDANT; 70/30 OPTIC; 3 LAMP CROSS SECTION; 2 BALLASTS; .71BF	3F32T8 3100LU 4100K	74W	UNV	CORELITE AXIS PINNACLE PEERLESS	J2SM-T8-3-C277-A-C-120-XX-4-5LTVS-DL6 CU-S-4-T8-3-X-0-3-UNV-ERS-1-C-.71BF L8A-3T8-4-XX-AC48GX-UNV-1C-W BRM9-3-32-SPR-70/30-SSH-X-R4-277-GEB10PS-SCT-L/LP-F1/24-C210-ACG	
	CM-34H	4' SUSPENDED LINEAR PENDANT; 70/30 OPTIC; 3 LAMP CROSS SECTION; MULITPLE BALLASTS; 1.36BF	3F32T8 2000LU 4100K 90 CRI	153W	UNV	CORELITE AXIS PINNACLE PEERLESS	J2SM-T8-3-C277-A-C-120-XX-4-SPECPSEB-DL6 CU-S-4-T8-3-X-0-3-UNV-ERS-1-C-1.36BF L8A-3T8-4-XX-AC48GX-UNV-1C-W-1.36BF BRM9-3-32-SPR-70/30-SSH-X-R4-277-GEB10PS-SCT-L/LP-F1/24-C210-ACG-1.36BF	
	CM-34P	4' SUSPENDED LINEAR PENDANT; 70/30 OPTIC; 3 LAMP CROSS SECTION; INTEGRAL PHOTOCELL; 2 BALLASTS; .71BF INTERNAL SWITCHING	3F32T8 3100LU 4100K	72W	UNV	CORELITE AXIS PINNACLE PEERLESS	J2SM-T8-3-C277-A-C-120-XX-4-5LTVS-DS-DL6 CU-S-4-T8-3-X-0-3-UNV-ERS-1-C-DSX-.71BF L8A-3T8-4-XX-AC48GX-UNV-1C-W-DSM BRM9-3-32-SPR-70/30-SSH-X-R4-277-GEB10PS-SCT-L/LP-F1/24-C210-ACG-PDT	
	CM-34PH	4' SUSPENDED LINEAR PENDANT 70/30 OPTIC; 3 LAMP CROSS SECTION; INTEGRAL PHOTOCELL; MULITPLE BALLASTS 1.36BF, INTERNAL SWITCHING	3F32T8 3100LU 4100K 90 CRI	153W	UNV	CORELITE AXIS PINNACLE PEERLESS	J2SM-T8-3-C277-A-C-120-XX-4-SPECPSEB-DS-DL6 CU-S-4-T8-3-X-0-3-UNV-ERS-1-C-DSX-1.36BF L8A-3T8-4-XX-AC48GX-UNV-1C-W-DSM-1.36BF BRM9-3-32-SPR-70/30-SSH-X-R4-277-GEB10PS-SCT-L/LP-F1/24-C210-ACG-PDT-1.36BF	
	CM-38	8' SUSPENDED LINEAR PENDANT; 70/30 OPTIC; 3 LAMP CROSS SECTION; 2 BALLASTS; .71BF	6F32T8 3100LU 4100K	144W	UNV	CORELITE AXIS PINNACLE PEERLESS	J2SM-T8-3-C277-A-C-120-XX-8-5LTVS-DL6 CU-S-8-T8-3-X-0-3-UNV-ERS-1-C-.71BF L8A-2T8-8-XX-AC48GX-UNV-1C-W BRM9-3-32-SPR-70/30-SSH-X-R8-277-GEB10PS-SCT-L/LP-F1/24-C210-ACG	
	CM-38H	8' SUSPENDED LINEAR PENDANT; 70/30 OPTIC; 3 LAMP CROSS SECTION; MULITPLE BALLASTS; 1.36BF	6F32T8 2000LU 4100K 90 CRI	306W	UNV	CORELITE AXIS PINNACLE PEERLESS	J2SM-T8-3-C277-A-C-120-XX-8-SPECPSEB-DL6 CU-S-8-T8-3-X-0-3-UNV-ERS-1-C-1.36BF L8A-2T8-8-XX-AC48GX-UNV-1C-W-1.36BF BRM9-3-32-SPR-70/30-SSH-X-R8-277-GEB10PS-SCT-L/LP-F1/24-C210-ACG	
	CM-38P	8' SUSPENDED LINEAR PENDANT; 70/30 OPTIC; 3 LAMP CROSS SECTION; INTEGRAL PHOTOCELL; 2 BALLASTS; .71BF INTERNAL SWITCHING	6F32T8 3100LU 4100K	144W	UNV	CORELITE AXIS PINNACLE PEERLESS	J2SM-T8-3-C277-A-C-120-XX-8-5LTVS-DS-DL6 CU-S-8-T8-3-X-0-3-UNV-ERS-1-C-DSX-.71BF L8A-2T8-8-XX-AC48GX-UNV-1C-W-DSM BRM9-3-32-SPR-70/30-SSH-X-R8-277-GEB10PS-SCT-L/LP-F1/24-C210-ACG-PDT	
	CM-38PH	8' SUSPENDED LINEAR PENDANT, INTEGRAL PHOTOCELL 70/30 OPTIC; 3 LAMP CROSS SECTION; INTEGRAL PHOTOCELL;MULITPLE BALLASTS; 1.36BF, INTERNAL SWITCHING	6F32T8 3100LU 4100K 90 CRI	306W	UNV	CORELITE AXIS PINNACLE PEERLESS	J2SM-T8-3-C277-A-C-120-XX-8-SPECPSEB-DS-DL6 CU-S-8-T8-3-X-0-3-UNV-ERS-1-C-DSX-1.36BF L8A-2T8-8-XX-AC48GX-UNV-1C-W-DSM-1.36BF BRM9-3-32-SPR-70/30-SSH-X-R8-277-GEB10PS-SCT-L/LP-F1/24-C210-ACG-PDT	
	CT	EXTRUDED ALUMINUM FIXTURES: LENGTHS AND CONFIGURATIONS SHOWN ON THE DRAWINGS; LAMPS FOUR FOOT WHERE POSSIBLE; PROGRAMMED START ELECTRONIC BALLASTS; T8 LAMPS; INTERNAL CONCEALED FASTENERS; CAST ELBOWS AND FITTINGS; COLOR AS NOTED AND/OR APPROVED BY ARCHITECT; ORIENT FIXTURE ACCORDING TO ARCHITECTS/ENGINEER'S INSTRUCTIONS.						
	CT-4	4' LIGHT INSTALL IN RECESSED CEILING SLOT; .71BF	1F32T8 3100LU 4100K	26W	UNV	PINNACLE AXIS FOCAL POINT NULITE	E4A-1T8-4-GX-277-1CC-W BBR-S-FL-4-X-T8-1-X-UNV-ERS-1-.73BF FSM4-FL-1T8-1C-277-E-4' RG4-1T8-UNV-PS-N-1C-FR-F-4'	
	DX	DOWNLIGHT; THERMALLY PROTECTED HOUSING; TO ACCOMMODATE MULTIPLE ALUMINUM TRIMS AND REFLECTOR ASSEMBLIES AS LISTED BELOW; MAX 8" DEEP, NON-IC HOUSINGS EXCEPT AS NOTED.						
	DX-1	6" INTERIOR LED DOWNLIGHT 0-10 VDC DIMMING DIMMABLE 1% - 100%	LED 2000 LU 4000K	39W	UNV	LIGHTOLIER PRESCOLITE WILLIAMS GOTHAM PORTFOLIO	C6L1520DL-40K-M-CCL-P-VA/C6L20NUNV LF6LED-6LFLED7-40K-CBA LED60-OS20/840-CS-EDD-OS-BH-UNV EVO 41/22 6AR MD MVOLT LD6A-20-D010TE-ERM6A20-8-40-6LM1-LI-HB26	
	DX-2	4" LED DOWNLIGHT; CLEAR CONE SOME LOCATIONS REQUIRE SPECIAL BACKING AND MOUNTING IN METAL CEILING	LED 1200LU 4000K	26W	UNV	LIGHTOLIER LITHONIA PORTFOLIO	0M4LED-26-8-40K-NF-277/R4LEDCSS EVO4-41/14-4AR-277-AZ10 LD4A13D020TE-ERM4A13840 4LM1LI HB26	
	DX-3	6" INTERIOR LED DOWNLIGHT WITH WALL WASH OPTIC 0-10 VDC DIMMING DIMMABLE 1% - 100%	LED 2000 LU 4000K	39W	UNV	LIGHTOLIER PRESCOLITE LITHONIA WILLIAMS PORTFOLIO	C6L1520WW-40K-M-CCL-P-VA/C6L20NUNV LF6LED-WW-6LFLED7-40K-WW LDN6 40/20-LW6AR-MV-EZ1 LEDWW60-OS20/840-CS-EDD-OS-BH-UNV LD6A-20-D010TE-ERM6A20-8-40-6LM111-LI-HB26	
	DX-4	6" LED SHOWER DOWNLIGHT 0-10 VDC DIMMING DIMMABLE 1% - 100% WET LOCATION	LED 2000 LU 4000K	39W	UNV	LIGHTOLIER PRESCOLITE GOTHAM PORTFOLIO	C6L1520DL-40K-M-CCL-P-VA/C6L20NUNV LF6LED-6LFLED7-40K-CBA EVO 41/22 6AR MD MVOLT LD6A-20-D010TE-ERM6A20-8-40-6LM1-LI-HB26	
	DX-5	6" INTERIOR LED DOWNLIGHT WIDE OPTIC	LED 2000 LU 4000K	39W	UNV	LIGHTOLIER PRESCOLITE GOTHAM PORTFOLIO	C6L1520DL-40K-W-CCL-P-VA/C6L20NUNV LF6LED-6LFLED7-40K-CBA-WIDE EVO 41/22 6AR WD MVOLT LD6A-20-D010TE-ERM6A20-8-40-6LW1-LI-HB26	
	E	EMERGENCY BATTERY FOR INDICATED FLUORESCENT LUMINAIRE. SEPARATE SWITCH LEAD REQUIRED FOR ON/OFF NORMAL OPERATION PROVIDE 1100- 1400 LUMENS UNDER EMERGENCY CONDITIONS FOR FLUORESCENT LAMPS. REMOTE TEST SWITCH, LOCATED AS DIRECTED IN FIELD. FACTORY TO INSTALL BATTERY PACK. PAINT ALL DEVICES TO MATCH BACKGROUND. LED LUMINAIRES PROVIDE 50% OF RATED INITIAL LUMENS UNDER EMERGENCY CONDITIONS						
						LITHIONIA LIGHTOLIER EVENLITE	PS-1400EL DEB-5W BAL1400	
	E1	EXIT SIGN: METAL HOUSING; CEILING MOUNT, SEE DRAWINGS; ARROWS PER PLANS; LED LAMPS; EDGE LIGHTED CLEAR LENS; GREEN LETTERS ON CLEAR BACKGROUND. MUST MEET NFPA ILLUMINATION STANDARDS. UNITS SHOWN ARE CEILING MOUNT MODELS. CONTRACTOR TO PROVIDE WALL MOUNTED OR END MOUNTED MODELS AND ALL CHEVRONS WHERE REQUIRED.						
	E1-1	SINGLE FACE:	LED	4.7W	UNV	DUAL-LITE EVENLITE EELP LITHONIA EXITRONIX ISOLITE CHLORIDE LIGHTOLIER	LECSGWA SOV-EM-G-1C-BK-XX-XX EDG 1 GC W EM LRP W 1 GC XX 120/277 S902-WB-SR-GC-BA EDGL-S-S-G-BK (BLACK HOUSING) STDLX-X-1-GC-X LEAC1GCX	
	E1-2	DUAL FACE:	LED	4.7W	UNV	DUAL-LITE EVENLITE EELP LITHONIA EXITRONIX ISOLITE CHLORIDE LIGHTOLIER	LECDGWA SOV-EM-G-2C-BK-XX-XX EDG 2 GC W EM LRP W 2 GMR XX 120/277 S903-WB-SR-GM-BA EDGL-D-S-G-BK (BLACK HOUSING) STDLX-X-2-GC-X LEAC2GC7	
	ET	EMERGENCY TRANSFER DEVICE INSTALLED AT EACH FIXTURE AS INDICATED ON THE FLOOR PLANS BY 'ET'						
	ET	LIGHT FIXTURE EMERGENCY TRANSFER DEVICE			UNV	BODINE WATTSTOPER CHLORIDE EXITRONIX DUAL LITE GREENGATE NINE 24	GTD20 ELCU-200 MTD-20-277 ETS ATSD CEPC-1 ELCR-R	
	FL	ADJUSTABLE, SWING ARM LED TASK FLOOD LIGHT, WALL MOUNT, INTERNAL SWITCH						
	FL-1	LED DOCK LIGHT, WET LOCATION WALL MOUNTED SWING ARM	LED 5000K	21W	UNV	PHOENIX HUBBELL DAYBRITE LED ENVOY LITHONIA	DLAW-16LED-25-GL-42-UNV DOK-18-L-U-5K-SP-C6-PC-DSDL40 ID1K42-120/LED LAMP LEDDL-765-NFL-15-OPT-LEDDL-ARMXX HDLED-TRI-LIGHT-DOCK ARM DSA40-150I-SED/CONTECH LAMP	
	G	INDIRECT TROFFERS: RECESSED FOR LAY-IN GRID; HINGED FLUSH STEEL DOOR WITH LATCH; EARTHQUAKE CLIPS, PROGRAM START ELECTRONIC BALLASTS; LONG COMPACT FLUORESCENT LAMPS; ONE BALLAST PER FIXTURE.						
	G-2	RECESSED LIGHT 2X2, LAYIN; .73BF	2F17T8 4100K	25W	UNV	FOCAL POINT AXIS WILLIAMS PINNACLE LINEAR LIGHTING	FEQ22B2T8S277GWP DAYF22-S-T8-2-W-UNV-ERS-1-X CDA-G-22-217-S1-DMS-EB8P2-UNV LU22A-2T8-GX-UNV-1C-W GL22-D-2-ET8-UNV-SBL-G-MW-PSB10	
	G-2F	RECESSED LIGHT 2X2, LAYIN; FLANGE KIT; .73BF	2F17T8 4100K	25W	UNV	FOCAL POINT AXIS WILLIAMS PINNACLE LINEAR LIGHTING	FEQ22B2T8S277GWPDF DAYF22-S-T8-W-UNV-ERS-1-DF CDA-F-22-217-S1-DMS-EB8P2-UNV LU22A-2T8-FL-UNV-1C-W GL22-D-2-ET8-UNV-SBL-FLANGE-MW-PSB10	
	G-4	RECESSED LIGHT 2X4 LAYIN; 2 BALLASTS FOR DUAL-LEVEL CONTROL; .6BF	2F32T8 3100LU 4100K	44W	UNV	FOCAL POINT AXIS PINNACLE LINEAR LIGHTING	FEQ24B2T8S277GWP DAYF24-S-T8-2-W-UNV-ERS-1-X LU24A-2T8-GX-UNV-1C-W GL24-D-2-ET8-UNV-SBL-G-MW-PSB10	
	G-4F	RECESSED LIGHT 2X4 LAYIN; FLANGE KIT; .71BF	2F32T8 3100LU 4100K	44W	UNV	FOCAL POINT AXIS PINNACLE LINEAR LIGHTING	FEQ24B2T8S277GWPDF DAYF24-S-T8-2-W-UNV-ERS-1-DF LU24A-2T8-FL-UNV-1C-W GL24-D-2-ET8-UNV-SBL-FLANGE-MW-PSB10	
	GF	RECESSED LAB QUALITY LIGHT, GASKET LENS AND DOOR; LONG FLUORESCENT LAMPS; PROGRAM START ELECTRONIC BALLASTS; HIGH BALLAST FACTOR BALLASTS AS NOTED, ARRANGED FOR UNIFORM SWITCHING						
	GF-97	2X4 SMOOTH LENS; PRISMATIC OPTIC; FLANGE MOUNT; 2 CIRCUIT ROW MOUNT; (2) - 4 LAMP BALLASTS; 1.38BF	6F32T8 2000LU 5000K 90CRI	258W	UNV	KENALL NEW STAR LA LIGHTING LITHONIA	CSEF024-632SB/1.38BF/2-277-SF-2H-U-UV--SPECIALRM SSF24-HC-OC-632-3-A-UN FCR720-6-4R-FSW-PA2-M2C-DL-3/2E8R-UNV 2SRH-F-G-6-32-FSF-K12V-MVOLT-1.38BF	
	GF-98	2X4 SMOOTH LENS; PRISMATIC OPTIC; FLANGE MOUNT; 2 CIRCUIT ROW MOUNT; (2) - 3 LAMP BALLASTS; 1.38BF	4F32T8 2000LU 5000K 90CRI	172W	UNV	KENALL AXIS LA LIGHTING LITHONIA	HSEGI24-432SB/1.38BF/2-277-SF-2H-U-UV--SPECIALRM SSG24-HC-OC-4-32-3-A-UN GCR720-4-4R-FSW-PA2-M2C-DL-2/E8R-UNV 2SRH-G-4-32-FSF-K12V-MVOLT-IOP	
	GF-99	2X4 SMOOTH LENS; PRISMATIC OPTIC; FLANGE MOUNT; 2 CIRCUIT ROW MOUNT; (2) - 3 LAMP BALLASTS; 1.38BF	4F32T8 2000LU 5000K 90 CRI	172W	UNV	KENALL NEW STAR LA LIGHTING LITHONIA	CSEF024-432SB/1.38BF/2-277-SF-2H-U-UV--SPECIALRM SSF24-HC-OC-432-3-A-UN FCR720-4-4R-FSW-PA2-M2C-DL-2/2E8R-UNV 2SRH-F-G-4-32-FSF-K12V-MVOLT-1.38BF	
	GS	RECESSED LAB QUALITY LIGHT, GASKET LENS AND DOOR; LONG FLUORESCENT LAMPS; PROGRAM START ELECTRONIC BALLASTS; HIGH BALLAST FACTOR BALLASTS AS NOTED, ARRANGED FOR UNIFORM SWITCHING						
	GS-4	2X4 SMOOTH LENS; PRISMATIC OPTIC; GRID MOUNT; 2 CIRCUIT ROW MOUNT; 2 - 3 LAMP BALLASTS; 1.38BF	4F32T8 2000LU 5000K 90CRI	172W	UNV	KENALL AXIS LA LIGHTING PARAMOUNT LITHONIA	HSEGI24-432SB/1.38BF/2-277-SF-2H-U-UV--SPECIALRM SSG24-HC-OC-4-32-3-A-UN GCR720-4-4R-FSW-PA2-M2C-DL-2/E8R-UNV G2-432-2-E2-PROFST 1.36BF 2SRH-G-4-32-FSF-K12V-MVOLT-IOP	
	HF	FLUOESCENT HIGHBAYS						
	HF-1	SURFACE MOUNT, FLAT LENS; SPRAY DOWN RIGID MOUNT; (2) - 4 LAMP BALLASTS; 1.36 BF; DUAL-LEVEL SWITCHED	6F32T8 3100LU	258W	UNV	LITHONIA LDPI DAYBRITE METALUX	FHH24-632T8-2/3 SPEC PSEB-RMK 379-T8-6L-4-UNV1-A-TR APX632-UNV-A 1/42-EB10R 2HBHD-632-A-UNV-AD3/3-1.36BF-U-STEM	
	HG	OUTDOOR VEHICLE LIGHT, VANDAL RESISTANT, DAMP RATED						
	HG-1	SURFACE MOUNT; SPRAY DOWN RIGID MOUNT; .88BF	2F32T8 3100LU	56W	UNV	KENALL COLUMBIA LITHONIA NEW STAR	N1048C232SP1D FNPS4-232PPEP-U-2H-TP-MLID EFS-2-32-MVOLT-GEB10PS 540-232-1-UN-PR/WL	

CRSA
649 E. South Temple
Salt Lake City, UT 84102
801.355.5915

MWL
11798 N. Lakeridge Pkwy.
Ashland, VA 23005
804-228-7473

State of Utah
Department of Administrative Services
Division of Facilities Construction & Management
4110 State Office Building
Salt Lake City, Utah 84114
Phone: (801) 538 - 3018
Fax: (801) 538 - 3267

DFCM APPROVAL STAMP

LICENSED PROFESSIONAL ENGINEER
No. 181563
DAVID E. WESEMANN
04-21-2014
STATE OF UTAH

ARCHITECT-ENGINEER STAMP

Unified State Laboratory Module 2

4451 South 2700 West, Taylorsville, UT 84118

DFCM #: 13020300

Project #: B13-024

DATE:	ISSUE TYPE:
April 21, 2014	BID SET

MARK	DATE	DESCRIPTION
2	May 20, 2015	ADDENDUM #3

CHECKED BY	D. WESEMANN
DRAWN BY	DLM

LIGHTING FIXTURE SCHEDULE

EL601
VOLUME 2

C:\Users\jpm\Desktop\Revit Local Files\2013\2013\362Elec Central_jpm.rvt
5/20/2015 7:03:49 PM

ZX-2	RECTANGULAR SHOEBOX; TYPE 4 OPTICS; FLAT LENS; 32.5' POLE SINGLE HEAD	LED 20000 LU 4000K	336W	UNV	VISIONAIRE LITHONIA MCGRAW-EDISON	PST-2-L-5-T4-96LC-700-4000K/ 32.5 SSS POLE CSX1 LED 60C 1000 40K T4M MVOLT SPA DDBXD GLEON-AA-06-LED-E1-T4-SCBA-SSA20D4-4-DM10-CBA-BC-MODBOX

HG-2	PENDANT MOUNT; SPRAY DOWN, FULL CUTOFF	15,600 LU 4000K	159W	UNV	ALBEO VOIGHT LUX DYNAMICS	ABH2-0-2-H-48-4-NN-23-KNW DK1000-3-5000-4000K-AC-N-SN-WH-UNV-WET-DOOR/LENS LED-GYM-4-UNV-BOTTON-840-C410-PENDANT-LADC-4'-LDFA
LED	LED LUMINAIRES					
LED-1	4' LED LOW PROFILE ASYMETRIC COVE LIGHT;	LED 4000LU 4100K	64W	UNV	LITECONTROL PRUDENTIAL A-LIGHT SSL FOCALPOINT	CC-AI-L15-04-HO-40K-CWM-1CWQ-UNV MIC-LED4-HO-4-SC-UNV-DM10 P5-4-LH-40-U-3-N-L-D-wisp CVLX-4-UNV-4K-60-EC6 FCOL HN 1000LF 40K 1C UNV LD1 SC 4
OC	OUTDOOR WALL LIGHT; FULL CUTOFF; WET LABEL					
OC-32	OUTDOOR WALL PACK; FULL CUTOFF;	LED 4000LU 4000K	35W	UNV	LIGHTOLIER LITHONIA CREE LUMARK	RDNOXX DSXW1 LED 20C 700 40K T3M MVOLT DDBXD SEC-EDG-3M-WM-04-UL-CBA-525MA-40K XTOR3A
OF	FLOODLIGHT					
OF-1	PIPE MOUNTED LED FLOOD; TWIST LOCK; DMX SET TO FULL; MEDIUM FLOOD OPTICS;	LED 4000K	50W	UNV	ALTMAN ETC	SSCUBE-4K-W SELD2222H/CABLES/SELRW-D22/CLAMP
OG	INGROUND LINEAR FLOODLIGHT					
OG-1	48" LONG; ASYMETRIC OPTICS; BRUSHED STAINLESS STEEL	LED 4000K	44W	UNV	BEGA DESIGN PLAN ERCO PRISMA LIGMAN	7918LED CL4-L-AF-4-GE-0-C--T-S 32831.000 4' 075138-LED ULI-60335-M-W40-F-54W
OJ	RECESSED STEPLIGHT; WET LABEL					
OJ-1	24X3.5X3.5 LENSED; BRUSHED STAINESS STEEL	LED 4000K	7.2W	UNV	SPI LUMUX SSL COLE INSIGHT	ERW11609 35K BSS PW SL100-20-LEDWW-3500K-120/277-SILVER IF19-4KCBA L2158G QD-6-35K-CW-27-2-CC-BRUSHED STAINLESS-WL
OL	OUTDOOR LANDSCAPE LIGHT					
OL-1	ADJUSTABLE TREE UPLIGHT; REMOTE POWER SUPPLY 18" STANCHION MOUNTED IN CONCRETE	LED 4000K	8.4W	12VAC	BK ECOSENSE HADCO	SDS-LED-E22-SP-A9/REM12VAC BUL-S-30-277-IC-SCBA-11 MA5-XX-DH-C-CBA-L-S7
SA	GENERAL PURPOSE INDUSTRIAL: WHITE ENAMEL, APERTURED REFLECTOR; PROGRAM START ELECTRONIC BALLASTS; T8 LAMPS; ONE BALLAST PER FIXTURE WHERE POSSIBLE; UNLESS TWO LEVEL SWITCHING IS SHOWN ON THE PLANS; STEM MOUNTED WITH TONG HANGERS.					
SA-1	BACK OF HOUSE FLUORESCENT LIGHT; .6BF	2F32T8 3100LU	40W	UNV	DAYBRITE COLUMBIA WILLIAMS LITHONIA METALUX	IA232UNV KL-4-232-U-EPU 82-4-232-EB8P2-UNV LA 2 32 MVOLT OPXP DIF-232-UNV-HR81L-U
TX	SPECIAL FIXTURES AS INDICATED. MEET ALL REQUIREMENTS OF SPECIFICATIONS AND FIXTURE SCHEDULE. VISUAL AND FINISH APPROVAL REQUIRED.					
TX-1	DECORATIVE PENDANT; EMPLOYEE BREAKROOM	LED	25W	UNV		CONTRACTOR ALLOWANCE $ 550.00 EACH
UC	UNDER CABINET LIGHT, INTERNAL SWITCH					
UC-1c	SURFACE MOUNT; FLAT LENS 2' BIDIRECTIONAL MUST FIT AVAILABLE SPACE AND ATTACH TO WORK BENCH SHELF	LED F17T5	14W 4000K	UNV	ELLIPTIPAR COLE LTG FAILSAFE HEALTHCARE	L204-12SX-L-EL02-1-3-E-0S-41--MOD E1915-1 UCL-12-LD3-40-KSH25-ED-UNV-RSW HUC511 120 LED40 S1 BW GW
UC-2	SURFACE MOUNT; FLAT LENS 2' MUST FIT AVAILABLE SPACE	LED	19W 4000K	UNV	FAILSAFE NEWSTAR HEALTHCARE	UCL240A12125-ED-UNV-RSW MUS2-HC-LI-40A UN -RS HUC5 23 MVOLT LED40 S1 AM
UC-2c	SURFACE MOUNT; FLAT LENS 2' BIDIRECTIONAL MUST FIT AVAILABLE SPACE AND ATTACH TO WORK BENCH SHELF	LED F17T5	14W 4000K	UNV	ELLIPTIPAR COLE LTG FAILSAFE HEALTHCARE	L204-24SX-L-EL02-1-3-E-0S-41--MOD E1915-2 UCL-2-LD3-40-KSH25-ED-UNV-RSW HUC523 120 LED40 S1 BW GW
UC-3	SURFACE MOUNT; FLAT LENS 3' MUST FIT AVAILABLE SPACE	LED	28W 4000K	UNV	FAILSAFE NEWSTAR HEALTHCARE	UCL340A12125-ED-UNV-RSW MUS3-HC-LI-40A UN -RS HUC5 35 MVOLT LED40 S1 AM
UC-3c	SURFACE MOUNT; FLAT LENS 3' BIDIRECTIONAL MUST FIT AVAILABLE SPACE AND ATTACH TO WORK BENCH SHELF	LED F21T5	17W 4000K	UNV	ELLIPTIPAR COLE LTG FAILSAFE HEALTHCARE	L204-36SX-L-EL02-1-3-E-0S-41--MOD E1915-3 UCL-23-LD3-40-KSH25-ED-UNV-RSW HUC535 120 LED40 S1 BW GW
UC-4	SURFACE MOUNT, FLAT LENS 4' MUST FIT AVAILABLE SPACE	LED	37W 4000K	UNV	FAILSAFE NEWSTAR HEALTHCARE	UCL440A12125-ED-UNV-RSW MUS4-HC-LI-40A UN -RS HUC5 46 MVOLT LED40 S1 AM
UC-4c	SURFACE MOUNT; FLAT LENS 4' BIDIRECTIONAL MUST FIT AVAILABLE SPACE AND ATTACH TO WORK BENCH SHELF	LED F28T5	23W 4000K	UNV	ELLIPTIPAR COLE FAILSAFE HEALTHCARE	L204-36SX-L-EL02-1-3-E-0S-41--MOD E1915-4 UCL-4-LD3-40-KSH25-ED-UNV-RSW HUC546 120 LED40 S1 BW GW
V	FLOURESCENT VANDAL RESISTANT					
V-1	SURFACE MOUNT; SPRAY DOWN RIGID MOUNT; .6BF	2F32T8 3100LU	44W	UNV	KENALL LITHONIA NEWSTAR COLUMBIA	N1048C232SP1D EIS 232 MV APLP 540-232-1-UNPR/WL FNPS4-232PPEP-U-2H-TP-MLID
V-2	1X4 RECESSED FLUORESCENT; CLASS 1 DIV 2; .88BF	2F32T8 3100 LU 3100LU	56W	UNV	DAYBRITE KURTZON RIG-A-LITE	HAZ232277SPECPSEB HLF2 1X4 2T8 UNV RFL-265-14-2-G-U
V-3	1X4 SURFACE MOUNT; SPRAY DOWN; GASKETED; STAINLESS STEEL; .6BF	2F32T8 3100LU	44W	UNV	KENALL NEW STAR DAYBRITE CD LIGHTING	CRDSS14-232-UNV-B-1/3-SPECPSEB-SSD SCS14-HSOS-2321-A-UN-IP65 CRSDD14-232-UNV-C-1/3-SB-SS-WL CSA-14-2-32-U-EBH-12PA-SHP-SFP
WB	WALL MOUNTED LIGHT LOCATED ABOVE WALL ELEMENT (MIRROR/WHITEBOARD, ETC.): AS INDICATED ON DRAWINGS; WITH ACRYLIC INJECTION MOLDED; PROGRAM START ELECTRONIC BALLASTS; T8 LAMPS; ONE BALLAST PER FIXTURE WHERE POSSIBLE, UNLESS TWO LEVEL SWITCHING IS SHOWN ON THE PLANS.					
WB-2	RESTROOM MIRROR LIGHT; 2' FLUORESCENT; UP AND DOWNLIGHT; MUST FIT SPACE AVAILABLE .73BF	2F17T8	30W	UNV	LITHONIA COLUMBIA LA LIGHTING METALUX	WP217MVOLT SPECPSEB PR2-1U1D17-EPU BSQ100-2-2R-UCA-PA-2E8R-UNV BIU-217-UNV-ER81-U
WB-4	RESTROOM MIRROR LIGHT; 4' FLUORESCENT; UP AND DOWNLIGHT; MUST FIT SPACE AVAILABLE; .6BF .71BF	2F32T8 3100LU	44W	UNV	LITHONIA COLUMBIA LA LIGHTING METALUX	WP232MVOLT SPECPSEB PR4-1U1D32-EPU BSQ100-2-4R-UCA-PA-2E8R-UNV BIU-232-UNV-ER81-U
WB-8	RESTROOM MIRROR LIGHT; 8' FLUORESCENT; UP AND DOWNLIGHT; MUST FIT SPACE AVAILABLE; .6BF .77BF	4F32T8 3100LU	88W	UNV	LITHONIA LA LIGHTING METALUX	WP232MVOLT SPECPSEB DUAL BSQ100-2-8RT-UCA-PA-4E8R-UNV (2)BIU-232-UNV-ER81-U
WB-10	BACK OF HOUSE STAIR LIGHT; INTEGRAL OCC SENSOR;	LED 3300LU 4000K	45W	UNV	DAYBRITE NEW STAR LITHONIA KENALL	SF4C3300-40-ULAG-OC VIC4N-L2401-RW-UN-WH-OC WL4 41L D43 LP840 N100 NESPDT7 MLHA5-48-R-MW-PP-50L40K-DCC-DV-FM150
ZX	POLE AND LUMINAIRE 100 MPD, 1.3 GUST FACTOR, COLOR BY ARCHITECT, STRAIGHT STEEL POLE					
ZX-1	RECTANGULAR SHOEBOX; TYPE 3 OPTICS; FLAT LENS; 32.5" POLE SINGLE HEAD	LED 20000 LU 4000K	228W	UNV	VISIONAIRE LITHONIA MCGRAW-EDISON	PST-2-L-5-T3-96LC-700-4000K/ 32.5 SSS POLE CSX1 LED 60C 1000 40K T3M MVOLT SPA DDBXD GLEON-AA-06-LED-E1-T3-SCBA-SSA20D4-4-DM10-CBA-BC-MODBOX
ZX-1D	RECTANGULAR SHOEBOX; DUAL HEAD TYPE 3 OPTICS; FLAT LENS; 32.5" POLE SINGLE HEAD	LED 40000 LU 4000K	456W	UNV	VISIONAIRE LITHONIA MCGRAW-EDISON	PST-2-L-5-T3-96LC-700-4000K/ 32.5 SSS POLE CSX1 LED 60C 1000 40K T3M MVOLT SPA DDBXD GLEON-AA-06-LED-E1-T3-SCBA-SSA20D4-4-DM10-CBA-BC-MODBOX

CRSA
649 E. South Temple
Salt Lake City, UT 84102
801.355.5915

MWL
11798 N. Lakeridge Pkwy.
Ashland, VA 23005
804-228-7473

State of Utah
Department of Administrative Services
Division of Facilities Construction & Management
4110 State Office Building
Salt Lake City, Utah 84114
Phone: (801) 538 - 3018
Fax: (801) 538 - 3267

DFCM APPROVAL STAMP

LICENSED PROFESSIONAL ENGINEER
No. 181563
DAVID E. WESEMANN
04-21-2014
STATE OF UTAH

ARCHITECT-ENGINEER STAMP

Unified State Laboratory Module 2

4451 South 2700 West, Taylorsville, UT 84118

DFCM #: 13020300

Project #: B13-024

DATE:	ISSUE TYPE:
April 21, 2014	BID SET

MARK	DATE	DESCRIPTION
2	May 20, 2015	ADDENDUM #3

CHECKED BY	D. WESEMANN
DRAWN BY	DLM

LIGHTING FIXTURE SCHEDULE (CONT.)

EL602
VOLUME 2

C:\Users\jpm\Desktop\Revit Local Files\2013\2013062Elec Central_jpm.rvt
5/20/2015 7:03:50 PM