State of Utah

GARY R. HERBERT
Governor

GREGORY S. BELL
Lt. Governor

Department of Administrative Services
KIMBERLY K. HOOD
Executive Director

Division of Facilities Construction and Management
RICH AMON
Interim Director

Addendum No. 1

Date:	May 7, 2013
To:	Invited Contractors
From:	Brian Bales - Project Manager
Reference:	Solar Array Installation – Geneva Building Mountainland ATC – Orem, Utah DFCM Project No. 13051260
Subject:	**Addendum No. 1**

Pages	Addendum Cover Sheet	3 pages
	Attachments	43 pages
	Total	46 pages

Note: This Addendum shall be included as part of the Contract Documents. Items in this Addendum apply to all drawings and specification sections whether referenced or not involving the portion of the work added, deleted, modified, or otherwise addressed in the Addendum. Acknowledge receipt of this Addendum in the space provided on the Bid Form. Failure to do so may subject the Bidder to Disqualification.

1.1 SCHEDULE CHANGES: There are no Project Schedule changes.

1.2 GENERAL ITEMS:

1.2.1 Scope: The contractor shall study the project plans and specifications prior to bid to fully understand the scope of work. Prior to bid, it is the contractor's responsibility to understand the details and scope of any subcontracted work and the costs associated with the performance of work by subcontractors.

1.2.2 Risk: The contractor shall identify risks for the project.

1.2.3 General Conditions: Prior to bidding this project, the contractor shall review the DFCM General Conditions, paying special attention to the following articles:

a. 4.1.5 Intent and hierarchy
b. 4.2.2 Responsibility
c. 6 Protection of persons and property

1.2.4 Demolition: The contractor is solely responsible to determine the means and methods for demolition. Adequate safety for personnel and property shall be provided. If required, temporary shoring, bracing, and protection shall be provided. Due to the scale of the drawings, it is impossible to show the impact of every demolished surface on surrounding surfaces and structures. It is the contractor's responsibility to identify the extent and cost of repair work for surfaces that adjoin and are indicated to remain in place. Those costs shall be included in the contractor's bid.

1.2.5 Or Equal Products: When the project has been designed with a specified manufacturer's product and "or equal" products are allowed, all or equal products shall be equivalent in all characteristics including proprietary operating systems to as to insure a complete functioning system. Products that do not meet these criteria will be considered to be a lower quality or lower cost product and will not be considered. It is the contractor's responsibility to insure prior to bid that all "or equal" products meet the stated criteria and specific project requirements. If required by the contract documents, requests for or equal determination shall be submitted in accordance with the project RFP and bid schedule.

1.2.6 Sidewalks: The contractor is cautioned that the sidewalks have a limited load-bearing capability. The contractor shall not drive heavy equipment on the sidewalks. Damage to the sidewalks or landscaping shall be repaired by the contractor at no cost to the owner.

1.2.7 Disturbance: The contractor shall coordinate activities that create loud abrupt noise (jackhammers, shot pin tools, saw cutting, and hammer drilling, etc.). with the MATC. Those activities shall be scheduled to minimize disturbance to the occupants. Generally speaking, it is expected that those activities shall be conducted before 8:00 AM or after 5:00 PM.

1.2.8 Contract Documents: The contractor will be required to provide printed sets as needed for construction.

1.2.9 Steel Fabricators: Offsite fabrication of structural steel products and elements shall be performed by DFCM-approved fabricators who are on the pre-approved structural steel fabricators list as of the date of this RFP. The contractor's bid will be considered non-responsive should they utilize a structural steel fabricator who has not been pre-approved by DFCM. The fabricators Certificate of Compliance shall be submitted at the appropriate time. For additional information and clarifications, please contact the DFCM Building Official or refer to the Building Official's link on the DFCM website. Approval of fabricators and requirements to become approved are listed on the Building Official's web site.

1.2.10 Submittals: The contractor shall review all submittals prior to submitting to the architect and/or engineer for review. Upon satisfactory review by the associated contractor or subcontractor, the submittal should be stamped and signed by each tier of supplier and contractor confirming that the submittal is in fully compliance with the contract documents. If not in compliance, each non-compliant item should be listed and/or highlighted as non-compliant.

1.2.11 Sales Tax: Sales tax SHOULD BE INCLUDED in the bid.

1.2.12 Sole Source Suppliers: When sole source suppliers, vendors, or contractors are specified by DFCM or required by project needs, it is the bidder's responsibility to provide all material, labor, and services required by the project documents. The bidder is responsible to insure that the sole source suppliers or contractor is providing all necessary products, services, and labor for the project scope.

1.2.13 Existing Floor Surfaces: N/A

1.2.14 Site Survey and Discovery: Directly after award of the contract, the contractor is required to investigate the project and building to discover differing site conditions that could affect the schedule, systems used, or items that require submittal review. See General Conditions 4.1.1 and 4.1.2.

1.2.15 Bidsync Comments: N/A

1.2.16 Bid Document Scale: Due to the small scale of the drawings an details, contractors are responsible to verify existing condition critical measurements prior to bid and to insure the materials supplied meet project requirements. Contractors should examine the existing roof equipment layout and design accordingly.

1.2.17 DFCM Design Standards: Contractors will comply with the DFCM design guideline which can be found on the DFCM home page.

1.2.18 Roof Warranty: The roof was installed by Kendrick Brothers Roofing.

a.	Contact Person:	Jon Bertagnoli
b.	Address:	1762 West 130 South, Ogden, Utah 84401
c.	Phone:	801-430-6161
d.	Fax:	801-731-2020
e.	Email:	jon@kendrickbrosroofing.com

WARRANTY FOR SINGLE PLY ROOFING

WHERE AS, Carlisle SynTec Inc. (manufacture name), a corporation whose address is, P.O. Box 7000 Carlisle PA 17013 hereinafter called the Manufacturer, has manufactured and sold and caused to have applied, pursuant to the specifications and inspection, the necessary roofing materials to construct a PVC, TPO, EPDM or other single ply roof of approximately 16700 square feet and associated roof flashing of approximately _____ linear feet on the building described below:

1.2.19 RMP Blue Sky Recipient Document: Attached

1.2.20 Revised Roof Plan: Attached

1.2.21 MATC Phase 2 Drawings: Attached

ROCKY MOUNTAIN POWER

Award Recipient Requirements

If your project is selected for funding, you will be subject to certain requirements to maintain your project's eligibility. The following describes the current awardee requirements, which are subject to change without notice:

Project reports

1. Submit a quarterly progress report on the 15th day of the month following the close of the calendar quarter and continue to do so until the project is completed and on-line. Failure to submit reports may delay the processing of future reimbursement or for the award offer to rescinded.
2. Submit a final report and supporting documentation upon completion of the project summarizing the project specifications, completion date, anticipated electricity production, educational components and community benefit, etc. as well as documentation that verifies completion (definition below) and detailed renewable energy project costs.
3. Notify Rocky Mountain Power as soon as possible in writing of any change in project scope. Re-sizing or changing the scope of a project requires submittal of project change request form. You must receive approval from Rocky Mountain Power prior to altering the scope of the project. The original level of funding awarded will be reevaluated at that time against the new project scope.
4. Keep the Blue Sky funding award administrator and local utility contact apprised of project updates and opportunities to participate in celebrations and news/press announcements as your project develops and upon project completion.
5. Funding will be distributed once the project is complete and verified through the following steps*:
   - *Final report is submitted to Blue Sky team - blueskyprojects@rockymountainpower.net*
   - *City/county electrical inspection is performed*
   - *Utility has approved interconnection agreement application*
   - *Utility has approved installation for operation (utility installed net meter is operational and system is grid tied; for projects that are not to be net metered, the final report must include a copy of the power purchase agreement signed by the project sponsor and an authorized Rocky Mountain Power representative)*
   - *Itemized financial report showing allocation of Blue Sky funding including the percent of the total project cost covered by Blue Sky funds and back-up documentation submitted (i.e. invoices and copies of checks for total project costs including material and labor costs)*
   - *Details of ongoing education plan with any supporting documentation, such as flyers, boards, blogs, etc.*
   - *Non-secure web link to the inverter monitoring system displaying production data of the renewable energy installation*
   - *Photos of: renewable energy installation, project kiosk/dashboard, project area*
6. Enroll in Rocky Mountain Power's Blue Sky program as a business partner; for-profit businesses must enroll at the Visionary level. New partnership enrollments must be submitted prior to, or along with, the submission of the signed agreement detailing the conditions and requirements of accepting Blue Sky funds.

All correspondence regarding the project, quarterly reports, project change forms, Blue Sky partnership enrollment forms and communication, must be submitted via email to Rocky Mountain Power at blueskyprojects@rockymountainpower.net.

Project monitoring

Provide Rocky Mountain Power with public access to inverter data and to the inverter monitoring web-page. Rocky Mountain Power may place a link to the monitoring site on its website. Information collected may be

used for educational purposes, performance analysis or any other reason Rocky Mountain Power deems necessary.

Renewable energy certificates

To the extent the project is able to generate renewable energy certificates (RECs), award recipients agree to grant Rocky Mountain Power's Blue Sky program the right to its proportionate share of the project's renewable energy certificates – an added benefit for Rocky Mountain Power Blue Sky customers for the life of the project. The share amount is expressed as a percentage of output when comparing Rocky Mountain Power's financial contribution to the overall cost of the renewable energy project. Rocky Mountain Power will also be given the opportunity to purchase additional renewable energy credits from the project, up to 100 percent of the project's output. Please verify your ability to meet this requirement with your other funding solutions.

Rocky Mountain Power customer communications

1. Allow Rocky Mountain Power and its customers and guests at least two tours each year, subject to 30 days advance notice by Rocky Mountain Power.
2. Allow Rocky Mountain Power to include information regarding your project in customer communication material used by Rocky Mountain Power. This includes Rocky Mountain Power's right to use photographs of the facility in brochures and internet pages for purposes of supporting the Blue Sky renewable energy program. Additionally, this includes the right to have a celebration when the project begins producing electricity.

Financing

Documentation of secured funding sources must be provided with project application. Documentation of any funding sources not secured at the time of application submission must be provided to Rocky Mountain Power prior to project completion and before Blue Sky award is issued.

Projects requiring funding upfront will be considered on a case-by-case basis and funding may be available through installments as mutually agreed to by all parties.

Additional links:

2013 Funding Award Timeline
Requirements & Eligibility
Evaluation & Selection
Application Tips
Apply for Funding
Blue Sky Fund Recipients

Customer Service

Customer service
1-888-221-7070

Report a power outage
1-877-508-5088

Report a streetlight outage

©2013 Rocky Mountain Power, a division of PacifiCorp and part of MidAmerican Energy Holdings Company

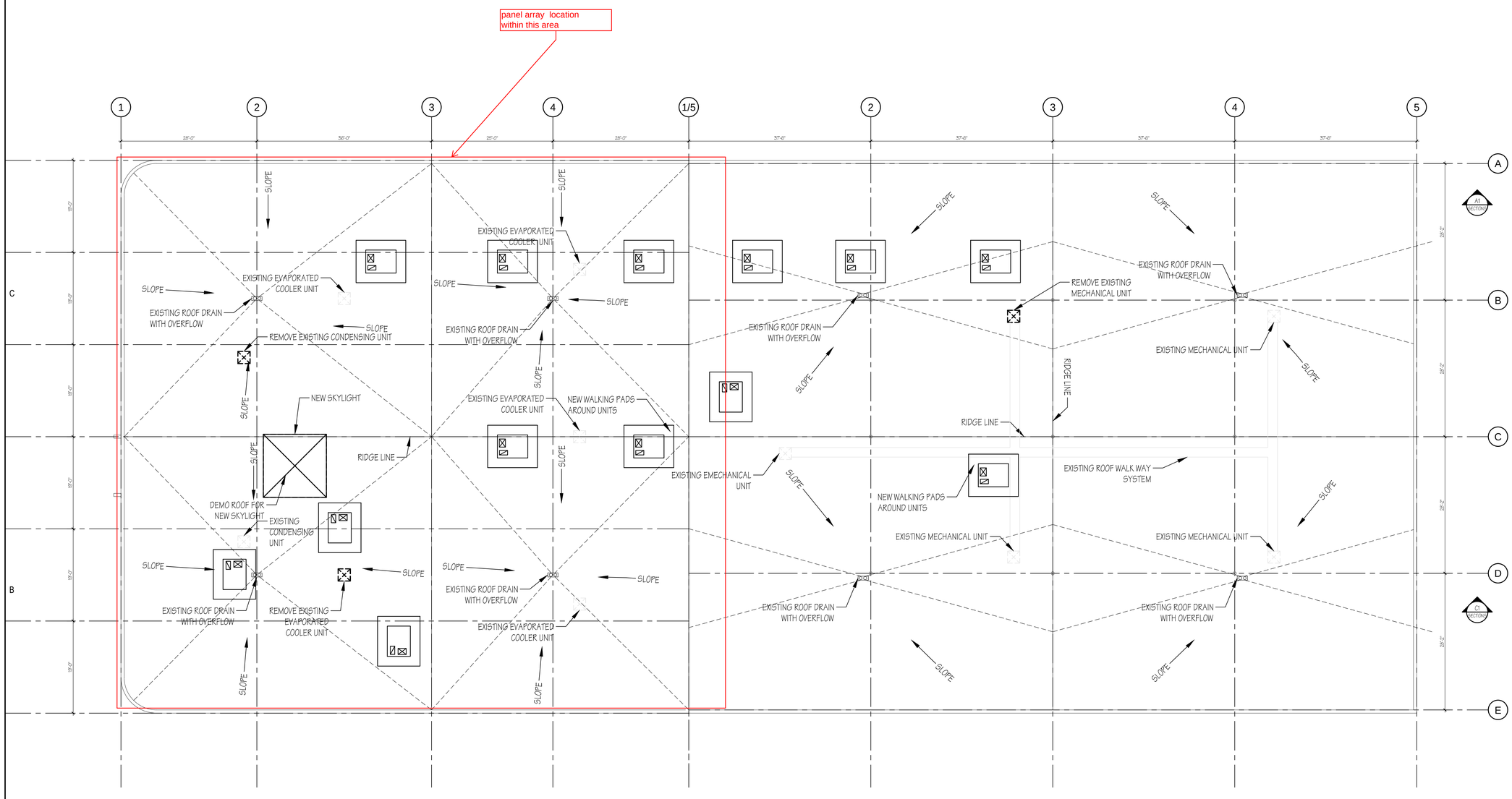

ROOF PLAN

SCALE: 3/32" = 1'-0"

HFSArchitects

ARCHITECTURE
INTERIORS
PLANNING

1484 South State Street
Salt Lake City, Utah 84115
801-596-0691/F: 596-0693
www.hfsa.com

CONSULTANT

MOUNTAINLAND APPLIED TECHNOLOGY COLLEGE PHASE THREE

GENEVA BUILDING REMODEL
1410 BUSINESS PARK DRIVE
OREM, UTAH 84058

MARK	DATE	DESCRIPTION

DATE:	JULY 25, 2012
AGENCY PROJECT NO:	09163260
HFSA PROJECT NO:	1204.01
CAD DWG FILE NO:	
DRAWN BY:	
CHECKED BY:	RS
DESIGNED BY:	RS
DWG TYPE:	
ARCHITECTURAL PHASE:	CONSTRUCTION BID DOCUMENTS

SHEET TITLE

SHEET OF 38

MOUNTAINLAND APPLIED TECHNOLOGY COLLEGE

GENEVA BUILDING REMODEL PHASE TWO

BUILDING OFFICIAL STAMP

DIVISION OF FACILITIES CONSTRUCTION AND MANAGEMENT
REVIEWED FOR CODE COMPLIANCE
SIGNATURE: FC
DATE: 4-23-13

HFSArchitects
ARCHITECTURE
INTERIORS
PLANNING

350 South 200 East, Suite 106
Salt Lake City, Utah 84111
801-596-0691/F: 596-0693
www.hfsa.com

STAMP

STATE OF UTAH
KRISTEN IRELAND VOROS
No. 7557079-0301
LICENSED ARCHITECT

CONSULTANT INFO

PROJECT DIRECTORY

ARCHITECT
HFS Architects
350 South 200 East, Suite 106
Salt Lake City, Utah 84111
(801) 596-0691/FAX 596-0693

MECHANICAL ENGINEER
Olsen & Peterson
Consulting Engineers, Inc.
14 East 2700 South
Salt Lake City, Utah 84115
(801) 486-4646/FAX 467-2531

STRUCTURAL ENGINEER
WCA Structural Engineering
442 North Main Street, Suite 200
Bountiful, Utah 84010
(801) 298-1118/FAX 298-1122

ELECTRICAL ENGINEER
BNA CONSULTING
635 South State Street
Salt Lake City, Utah 84111
(801) 532-2196/FAX 532-2305

GENERAL ABBREVIATIONS

Act.	Accoustic Ceiling Tile
Alt.	Alternate
Alum.	Aluminum
A.B.	Anchor Bolt
&	And
Arch.	Architectural
@	At or At The
Bm.	Beam
Blk.	Block
Blkg.	Blocking
Bd.	Board
Bot.	Bottom
Bldg.	Building
Cpt.	Carpet
Clkg.	Caulking
C.I.	Cast Iron
Clg.	Ceiling
Cem.	Cement
Ctr.	Center
C	Center Line
Cer.	Ceramic
C.T.	Ceramic Tile
Clr.	Clear (ance)
Clo.	Closet
Col.	Column
Conc.	Concrete
CMU	Concrete Masonry Unit
CMP	Corrugated Metal Pipe
Conn.	Connection
Constr.	Construction
Cont.	Continue/Continuous
Contr.	Contractor
C.J.	Control Joint
Corr.	Corridor
Cntr.	Counter
Ctsk.	Countersunk
Det.	Detail
Dept.	Department
Dia.	Diameter
Dim.	Dimension
Dn.	Down
D.S.	Downspout
Dwg.	Drawing
D.F.	Drinking Fountain
E.	East
Ea.	Each
Elec.	Electric (al)
Elev./El.	Elevation
Exist.	Existing
Eq.	Equal
Equip.	Equipment
Exist.	Existing
Exp.	Expansion
Ext.	Exterior
Fin.	Finish
F.A.	Fire Alarm
F.E.	Fire Extinguiser
F.E.C.	F.E. Cabinet
Flr./Fl.	Floor
F.D.	Floor Drain
F.O.S.	Face of Stud
F.O.W.	Face of Wall
Ftg.	Footing
Fdn.	Foundation
F.F.	Finish Floor
Galv	Galvanized
G.I.	Galvanized Iron
Ga.	Gauge
Gl.	Glass
Gr.	Grade
Gnd.	Ground
Gyp. Bd.	Gypsum Board
GWB	Gypsum Waterproof Board
H.D.P.E.	High Density Polyethylene
HG#	Hardware Group #
Hdwd.	Hardwood
Ht.	Height
H.P.	High Point
Horiz.	Horizontal
H.B.	Hose Bibb
H.M.	Hollow Metal
Hr.	Hours (Fire Rating)
In.	Inch
I.D.	Inside Diameter
Insul.	Insulation
Int.	Interior
I.E.	Invert Elevation
Inv.	Invert Elevation
Jan.	Janitor
Jt.	Joint
J-Box	Junction Box
Kit.	Kitchen
Lam.	Laminate
Lav.	Lavatory
Lt.	Light
L.P.	Low Point
Matl.	Material
Mas.	Masonry
Maint.	Maintenance
Mfr.	Manufacturer
M.H.	Manhole
M.O.	Masonry Opening
Max.	Maximum
Mech.	Mechanical
Memb.	Membrane
Men	Men's Toilet
Mtl./Met.	Metal
Min.	Minimum
Mir.	Mirror
Misc.	Miscellaneous
Mtd.	Mounted
Mul.	Mullion
Nom.	Nominal
N.	North
N.I.C.	Not In Contract
N.T.S.	Not To Scale
No. or #	Number
Off.	Office
O.C.	On Center
Opng.	Opening
Opp.	Opposite
Opp. H.	Opposite Hand
O.D.	Outside Diameter
O.R.D.	Overflow Roof Drain
Q.T.	Quarry Tile
Rad.	Radius
R.B.	Rubber Base
R.W.L.	Rain Water Leader
R.F.F.	Reference Finish Floor
Refl.	Reflected
Reinf.	Reinforcing
Req.	Required
Ret.	Retaining
Rev.	Revised
R.	Riser
R.D.	Roof Drain
Rm.	Room
R.O.	Rough Opening
Sched.	Schedule
Seal.	Sealant
Sect.	Section
S.Sk.	Service Sink
Sht.	Sheet
Sim.	Similar
Sl./Slp.	Slope
S.C.	Solid Core
Spec.	Specifications
Sq.	Square
Std.	Standard
Stl.	Steel
Stor.	Storage
Struct	Structural/Structure
Sym.	Symmetrical
T.B.R.	To be Removed
Tel.	Telephone
Temp.	Temporary/Tempered
Thk.	Thick (ness)
T & G	Tongue and Groove
T/Conc	Top of Concrete
T/Curb	Top of Curb
T.O. FTG.	Top of Footing
T.O.P.	Top of Plate
T/Wall	Top of Wall
T.	Tread
Typ.	Typical
Unf.	Unfinished
U.N.O.	Unless Noted Otherwise
Var.	Vary or Varies
Vert.	Vertical
V.T.R.	Vent Through Roof
VCT	Vinyl Composition Tile
w/	With
W.A.S.	Welded Anchor Stud
Wd.	Wood
Wp.	Waterproof
Wsct.	Wainscot
w/o	Without
W.P.	Working Point
W.R.	Water Resistant
W.I.	Wrought Iron

MATERIALS LEGEND

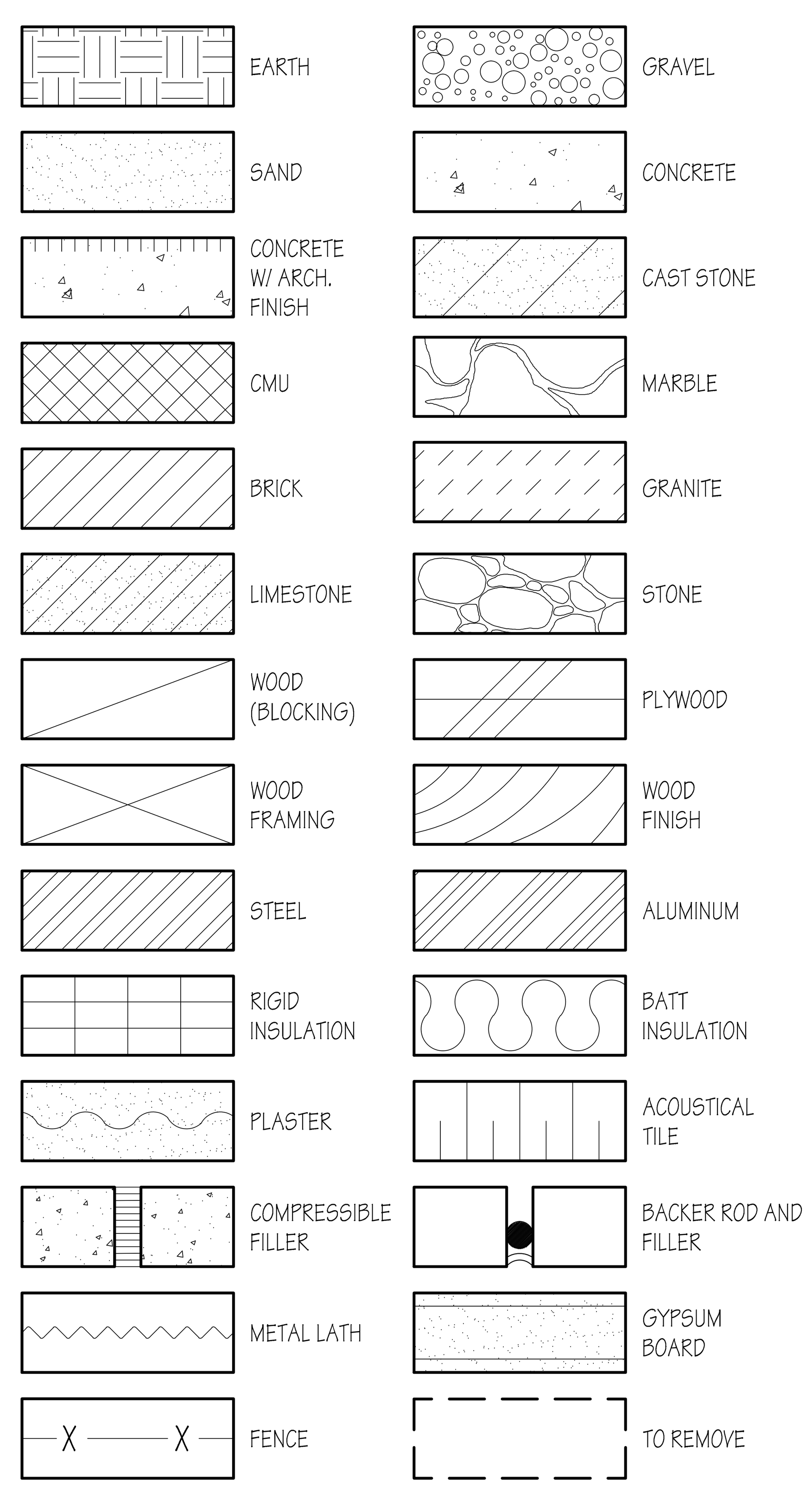

CODE ANALYSIS

APPLICABLE CODES

	Year		Year
International Building Code	2009	National Electrical Code	2011
International Mechanical Code	2009	Uniform Code for Building Conservation	2009
International Plumbing Code	2009	Dept. of Justice ADA Standards for Accessible Design	ADA 2010
International Fire Code	2009	ICC/ANSI A117.1-2003	
International Energy Conservation Code	2009		

A. Occupancy and Group: B, A3
Change in Use: Yes ____ No X Mixed Occupancy: Yes X No ____
Special Use and Occupancy (e.g. High Rise, Covered Mall): NO

B. Seismic Design Category: N/A Design Wind Speed: N/A mph

C. Type of Construction (circle one): I-A, I-B, II-A, II-B, III-A, III-B, IV-HT, V-A, (V-B circled)

D. Fire Resistance Rating Requirements for the Exterior Walls based on the fire separation distance (in hours):
North: N/A South: N/A East: N/A West: N/A

E. Mixed Occupancies: YES Nonseparated Uses: NO

F. Sprinklers:
Required: YES Provided: YES Type of Sprinkler System: WET

G. Number of Stories: TWO Building Height: 28' +/-

H. Actual Area per Floor (square feet): First Floor =30,307 SF Second Floor=3,065

I. Tabular Area: B=9,000 SF, A3=6,000 SF

J. Area Modifications:

a) $A_a = A_t + [A_t I_f] + [A_t I_s]$

B: 33,390 = 9,000 + [(9,000)(.71) + (9,000)(2)]
A3: 22,260 = 6,000 + [(6,000)(.71) + (6,000)(2)]

$I_f = \left[\frac{F}{P} - 0.25\right]\frac{W}{30}$

0.71 = [764'/764' - 0.25]28.5/30

b) Sum of the Ratio Calculations for Mixed Occupancies:

$\frac{\text{Actual Area}}{\text{Allowable Area}} \leq 1$ B: 29,155/33,390 = .87 A3: 1,152/22,260 = .05 .87 + .05 = .93 < 1

c) Total Allowable Area for:
1) One Story: 33,390 SF
2) Two Story: $A_a(2)$ 66,780 SF
3) Three Story: $A_a(3)$ N/A

d) Unlimited Area Building: Yes ____ No X Code Section: ____

K. Fire Resistance Rating Requirements for Building Elements (hours).

Element	Hours	Assembly Listing	Element	Hours	Assembly Listing
Exterior Bearing Walls	N		Floors - Ceiling Floors	N	
Interior Bearing Walls	N		Roofs - Ceiling Roofs	N	
Exterior Non-Bearing Walls	N		Exterior Doors and Windows	N	
Structural Frame	N		Shaft Enclosures	N	
Partitions - Permanent	N		Fire Walls	1	
Fire Barriers	1		Fire Partitions	1	
			Smoke Partitions	N	

L. Design Occupant Load: 624
Exit Width Required: 125" Exit Width Provided: 288"

M. Minimum Number of Required Plumbing Facilities:
a) Water Closets - Required (m) 7 (f) 7 Provided (m) 7 (f) 7
b) Lavatories - Required (m) 5 (f) 5 Provided (m) 5 (f) 5
c) Bath Tubs or Showers: N/A
d) Drinking Fountains: 2 Service Sinks: 1

FOOTNOTES:
1) In case of conflict with the U.S. Department of Justice Federal Registers Parts I through V - ADA Guidelines and specific reference to the International Building Code Accessibility Chapters, the more restrictive requirement shall govern.
2) Additional Code Information shall be provided at the discretion of the Building Official for Complex Buildings. Including, but not limited to:
a) High Rise Requirements.
b) Atriums.
c) Performance Based Criteria.
d) Means or Egress Analysis.
e) Fire Assembly Locator Sheet.
f) Exterior and Interior Accessibility Route.
g) Fire Stopping, Including Tested Design Number.

VICINITY MAP

GRAPHIC SYMBOLS

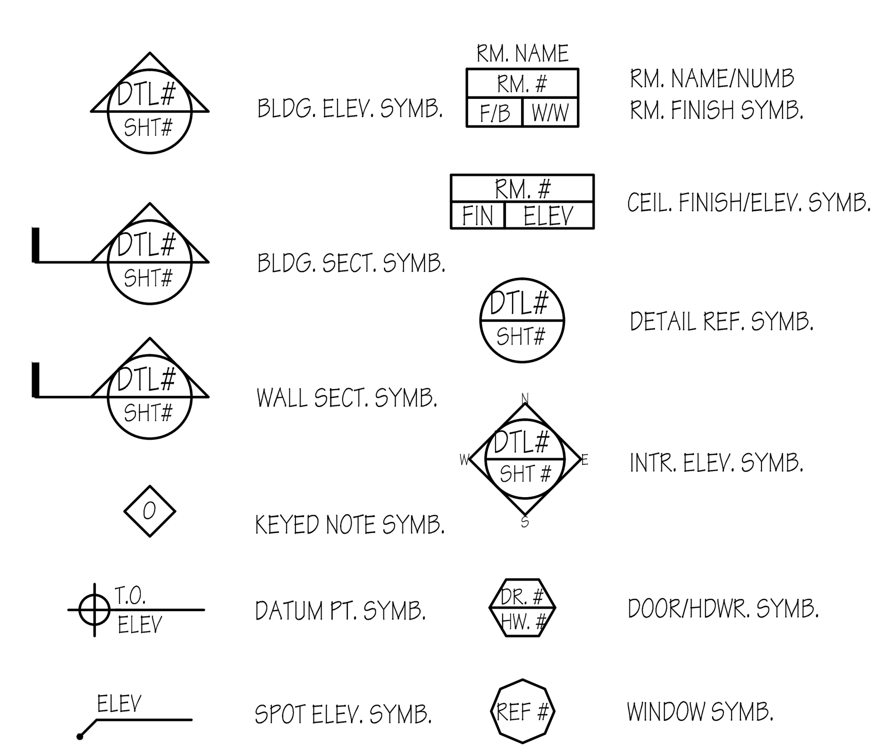

DRAWING INDEX

GI001	TITLE SHEET, GENERAL INFO, & SHEET INDEX
GI002	CODE ANALYSIS
AD101	FIRST FLOOR DEMO PLAN
AD102	SECOND FLOOR DEMO PLAN
AD103	FIRST FLOOR CEILING DEMO PLAN
AD104	SECOND FLOOR CEILING DEMO PLAN
AE101	FIRST FLOOR PLAN
AE111	FIRST FLOOR REFLECTED CEILING PLAN
AE121	ROOF PLAN
AE411	INTERIOR ELEVATIONS
AE501	ARCHITECTURAL DETAILS
AE601	DOOR SCHEDULE & DETAILS
AE602	WINDOW DETAILS
AE701	CASEWORK DETAILS
S0.1	STRUCTURAL NOTES
S0.2	STRUCTURAL NOTES
S1.1	FOOTING & FOUNDATION PLAN
S2.1	FLOOR FRAMING PLAN
S2.2	ROOF FRAMING PLAN
S3.1	STRUCTURAL DETAILS
S3.2	STRUCTURAL DETAILS
MD101A	MECHANICAL DEMO PLAN
M101A	MECAHNICAL PLAN
M501	MECHANICAL SCHEDULE
M601	MECHANICAL DETAILS
P101A	PLUMBING PLAN
P501	PLUMBING SCHEDULE & DETAILS
FP101A	FIRE PROTECTION PLANS
EG001	ELECTRICAL SYMBOLS, ELECTRICAL SCHEDULE, & ELECTRICAL NOTES
EG002	LIGHTING FIXTURE SCHEDULE
ED101A	FIRST FLOOR ELECTRICAL DEMO PLAN
ED102A	SECOND FLOOR ELECTRICAL DEMO PLAN
EL101	FIRST FLOOR LIGHTING PLAN
EP101	FIRST FLOOR POWER PLAN
EP102	SECOND FLOOR POWER PLAN
EP103A	ROOF POWER PLAN
EX101	ONE LINE DIAGRAM
EX102	PANELBOARD SCHEDULES
EX201	ELECTRICAL DIAGRAMS
EX202	ELECTRICAL DIAGRAMS

MOUNTAINLAND APPLIED TECHNOLOGY COLLEGE
PHASE 2
GENEVA BUILDING REMODEL
1410 BUSINESS PARK DRIVE
OREM, UTAH 84058

MARK	DATE	DESCRIPTION

DATE:	APRIL 19, 2013
AGENCY PROJECT NO:	09163260
HFSA PROJECT NO:	1204.01
CAD DWG FILE NO:	
DRAWN BY:	KV
CHECKED BY:	KV
DESIGNED BY:	KV
DWG TYPE:	ARCHITECTURAL
ARCHITECTURAL PHASE:	PERMIT SET

SHEET TITLE

TITLE SHEET
GENERAL INFO
& SHEET INDEX

GI001

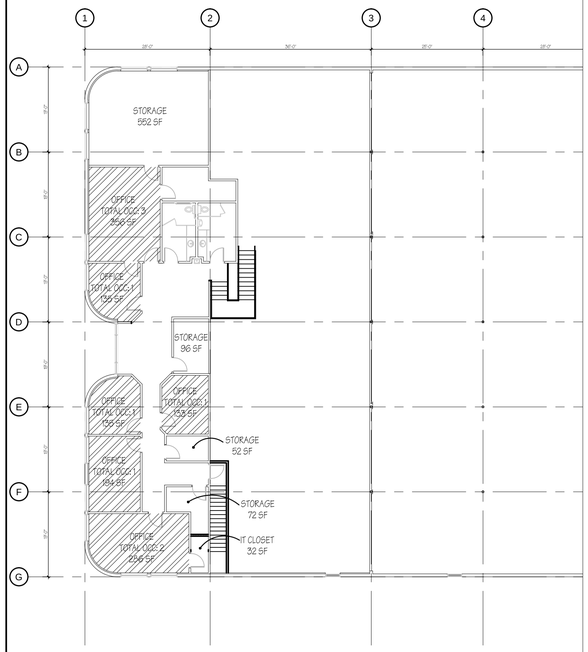

A1 OVERALL SECOND FLOOR EGRESS PLAN
1/16" = 1'-0"

NONSTRUCTURAL COMPONENT CHECKLIST

ITEM DESCRIPTION	NOT REQUIRED	ON CONST. DOCUMENTS	DEFERRED SUBMITTAL	COMMENTS
Architectural Components:				
Interior Nonstructural Walls & Partitions		X		
Cantilever Elements *(i.e. parapets, etc.)*	X			
Exterior Nonstructural Wall Elements	X			
Veneer	X			
Penthouses	X			
Ceilings *(i.e. suspended grid or hard-lid)*		X		
Cabinets *(i.e. storage cabinets, equip, etc.)*		X		
Access Floors	X			
Storage Racks	X			
Appendages & Ornamentations	X			
Signs & Billboards	X			
Other:	X			
Other:	X			
MEP Components:				
Fire Sprinklers		X		
Mechanical Equipment *(i.e. HVAC, fans, air handlers, boilers, furnaces, tanks, chillers, water heaters, heat exchangers, evaporators, engines, turbines, pumps, compressors, MFR equipment, etc.)*		X		
Electrical Equipment *(i.e. generators, batteries, inverters, transformers, MCC, panel boards, switch gear, cabinets, etc.)*	X			
Elevator & Escalator Components	X			
Communication Equipment, Computers, Instrumentation, and Controls	X			
Roof-mounted Chimneys, Stacks, Cooling & Electrical Towers	X			
Lighting Fixtures		X		
Vibration Isolated Components	X			
Piping & Conduit Systems		X		
Ductwork *(including in-line components)*		X		
Conveyors	X			
Cable Trays	X			
Other:	X			
Other:	X			

NOTES:

1. Deferred submittals for seismic restraint of nonstructural components must be submitted to the DFCM Building Official a minimum of two weeks prior to the planned installation in order to allow for plan review and forwarding to inspectors. In the event that the submittal is deficient additional time may become necessary.
2. If seismic restraints of non-structural components are installed prior to receiving DFCM approval they shall not be covered or concealed until receiving both plan review and inspection approval. Further, installers are proceeding at their own risk until plan review and inspection approval occurs.
3. The requirements for seismic restraint of nonstructural components cannot be satisfied by a general reference to Design Manuals. The design professional may utilize these manuals as a basis of their design, but must provide all supporting documentation to ensure that the design conforms to the requirements of ASCE 7-05, Chapter 13.
4. Submittals must include details of the proposed seismic restraint of nonstructural components. These details must show specific information relating to the materials, type, size, and locations of anchorages; materials used for bracing; attachment requirements of bracing to structure and component; and locations of transverse and longitudinal sway bracing and rod stiffeners. Submittals may also require structural calculations, engineering reports, test data, and/or specifications to ensure code compliance.

Revised: 02/15/2010

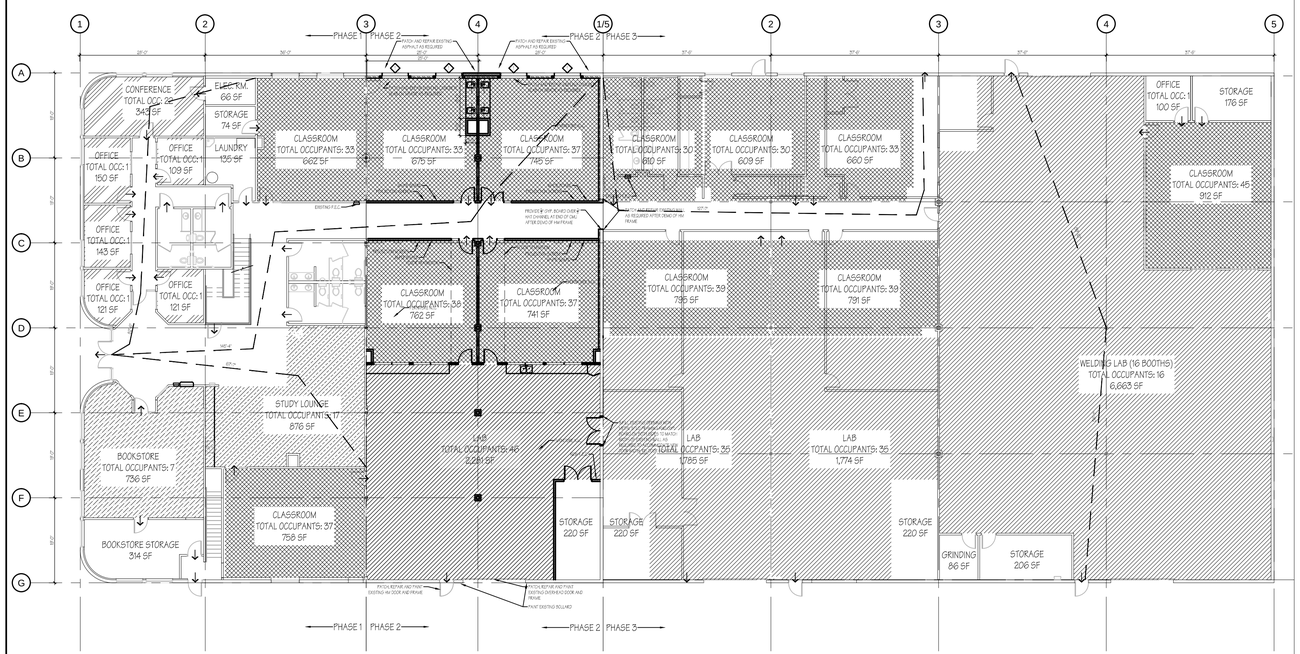

A1 OVERALL FIRST FLOOR EGRESS PLAN
1/16" = 1'-0"

EGRESS LEGEND

EGRESS CALCULATIONS

MEANS OF EGRESS:

MIN. REQUIRED EGRESS WIDTH: .20" PER OCCUPANT
MIN. REQUIRED EGRESS WIDTH: .20" X 624 = 125"

EGRESS WIDTH PROVIDED: 1ST FLOOR= 288"

MAXIMUM TRAVEL DISTANCE:

MAX. EXIT ACCESS TRAVEL DISTANCE: 300 FT.

NUMBER OF EXITS:

REQUIRED: 3 EXITS PROVIDED: 8 EXITS

EGRESS / ACCESSIBLE LEGEND

EGRESS ROUTE

ACCESSIBLE ROUTE

OCCUPANT LOAD CALCULATION

LEVEL 1	
OCCUPANT LOAD FACTOR	OCCUPANT LOAD
15 SF / PERSON	22 OCCUPANTS
20 SF / PERSON	431 OCCUPANTS
50 SF / PERSON	149 OCCUPANTS
100 SF / PERSON	5 OCCUPANTS
TOTAL LEVEL 1	615 OCCUPANTS

LEVEL 2	
OCCUPANT LOAD FACTOR	OCCUPANT LOAD
100 SF / PERSON	9 OCCUPANTS
TOTAL LEVEL 2	9 OCCUPANTS
TOTAL	624 OCCUPANTS

OCCUPANT LOAD LEGEND

20 SF CLASSROOM

50 SF LAB

100 SF OFFICE

15 SF CONFERENCE ROOM

50 SF STUDY LOUNGE

100 SF RETAIL / BOOKSTORE

DEFERRED SUBMITTALS

1. FIRE SPRINKLER SYSTEMS	JUNE 2013
2. FIRE ALARM SYSTEMS	JUNE 2013
3. SEISMIC RESTRAINT FOR HVAC	JULY 2013
4. SEISMIC RESTRAINT FOR ELECTRICAL	JULY 2013

COMPLIANCE REQUIREMENTS

1. THE FOLLOWING DOCUMENTS COMPLY WITH DFCM STANDARDS

2. THE FOLLOWING DOCUMENTS ARE REQUIRED BEFORE A CERTIFICATION OF OCCUPANCY IS ISSUED:

- A CODE INSPECTION REPORT RECOMMENDING THAT A CERTIFICATE OF OCCUPANCY BE ISSUED.
- FINAL REPORT FROM THE SPECIAL INSPECTION AGENCY.
- CERTIFICATE OF FIRE CLEARANCE FROM THE STATE FIRE MARSHALL.

BUILDING OFFICIAL STAMP

DIVISION OF FACILITIES CONSTRUCTION AND MANAGEMENT
REVIEWED FOR CODE COMPLIANCE
SIGNATURE: FC
DATE: 4-23-13

HFSArchitects
ARCHITECTURE
INTERIORS
PLANNING
350 South 200 East, Suite 106
Salt Lake City, Utah 84111
801-596-0691/F: 596-0693
www.hfsa.com

STAMP

STATE OF UTAH
KRISTEN IRELAND VOROS
No. 7557079-0301
LICENSED ARCHITECT

CONSULTANT INFO

MOUNTAINLAND APPLIED TECHNOLOGY COLLEGE PHASE 2

GENEVA BUILDING REMODEL
1410 BUSINESS PARK DRIVE
OREM, UTAH 84058

MARK	DATE	DESCRIPTION

DATE:	APRIL 19, 2013
AGENCY PROJECT NO:	09163260
HFSA PROJECT NO:	1204.01
CAD DWG FILE NO:	
DRAWN BY:	KV
CHECKED BY:	KV
DESIGNED BY:	KV
DWG TYPE:	ARCHITECTURAL
ARCHITECTURAL PHASE:	PERMIT SET

SHEET TITLE

CODE ANALYSIS

GI002

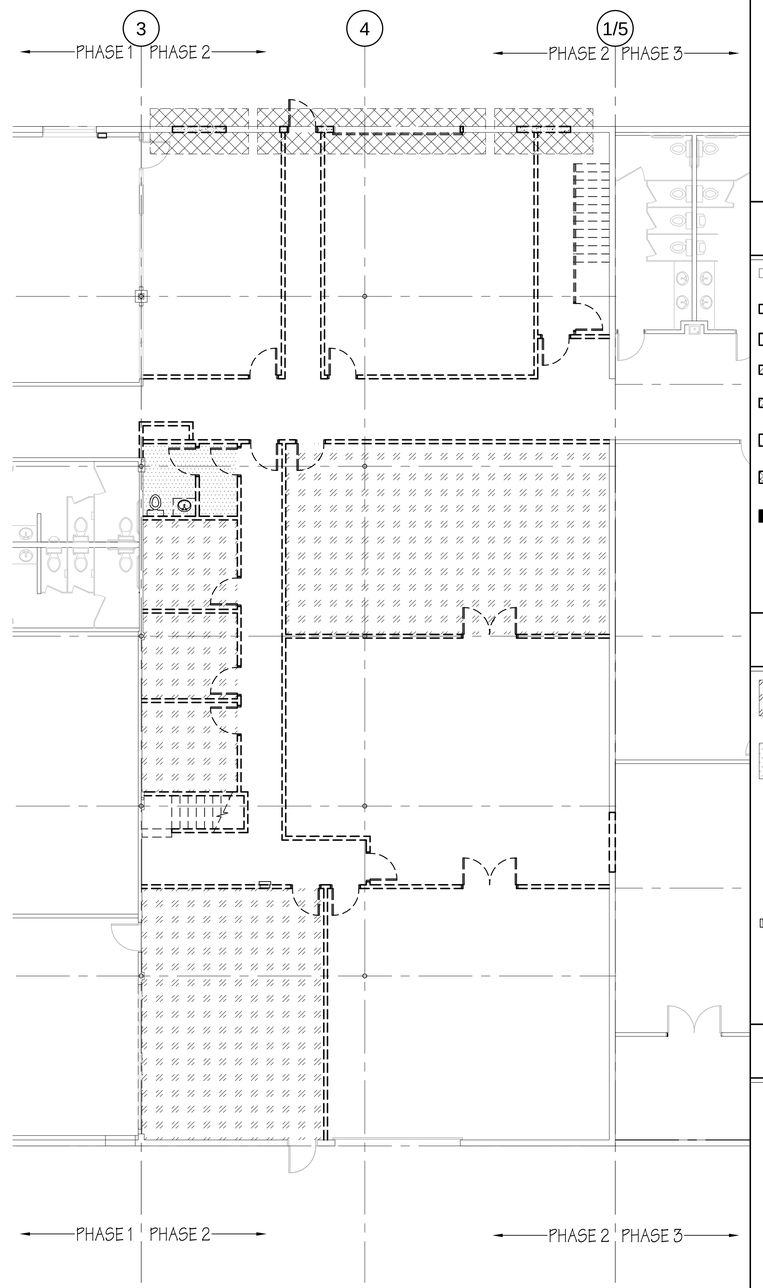

A4 FIRST FLOOR DEMO PLAN
1/8" = 1'-0"

GENERAL NOTES

1. ALL DIMENSIONS & EXISTING CONDITIONS IN AREAS OF WORK ARE TO BE FIELD VERIFIED PRIOR TO COMMENCING WORK - ANY DISCREPANCIES ARE TO BE REPORTED TO THE ARCHITECT OR ENGINEER OF RECORD PRIOR TO COMMENCING WORK.

2. PROTECT ALL AREAS & SURFACES ADJACENT TO DEMOLITION & CONSTRUCTION. PATCH & REPAIR ANY DAMAGE RESULTING FROM THE DEMOLITION OF EXISTING ITEMS OR THE CONSTRUCTION OF NEW ITEMS.

3. NOTED AREAS INDICATED THE GENERAL EXTENT OF DEMOLITION. THE CONTRACTOR'S CHOICE OF MEANS & METHODS OF CONSTRUCTION MAY REQUIRE MORE OR LESS DEMOLITION. THE MEANS & METHODS OF DEMOLITION & CONSTRUCTION MUST BE ACCOUNTED FOR IN THE CONTRACTORS BID. ANY DEMOLITION & REPAIR TO ADJACENT SURFACES BEYOND THE AREAS INDICATED IN THE CONTRACT DOCUMENTS WILL NOT BE COMPENSATED FOR AFTER THE BID OPENING.

4. 72-HOUR NOTICE IS REQUIRED FOR ANY UTILITY SHUT DOWN.

5. SEE MECHANICAL & ELECTRICAL DRAWINGS FOR ADDITIONAL INFORMATION & COORDINATE.

6. GC TO FINISH BOTH SIDES OF WALL DIVIDING PHASE 1 FROM 2, AND PHASE 2 FROM 3.

PARTITION LEGEND

- EXISTING WALL TO REMAIN, TYPICAL
- EXISTING 3-5/8" METAL STUDS W/ (1) LAYER GYPSUM BOARD BOTH SIDES TO BE DEMOLISHED, TYPICAL
- EXISTING CMU/CONCRETE WALL TO BE DEMOLISHED
- NEW 3-5/8" METAL STUD @ 16" O.C. W/ 5/8" GYPSUM BOARD BOTH SIDES WALL, TYPICAL
- NEW 3-5/8" METAL STUD @ 16" O.C. W/ 5/8" GYPSUM BOARD ONE ONE SIDE, TYPICAL
- NEW 3-5/8" METAL STUD SPACED 1" FROM EXISTING CMU WALL @ 16" O.C. W/ FULL BATT INSULATION TO 6"ABOVE CEILING HEIGHT W/ 5/8 " GYPSUM BOARD TO 6" ABOVE FINISH CEILING BRACED TO STRUCTURE @ 4'-0" O.C.,
- NEW CMU BLOCK WALL INFILL. CONTRACTOR TO MATCH EXISTING CMU SIZE, TYPE, COLOR AND GROUT LINES. SEE DETAIL A1/AE602 AND STRUCTURAL
- NEW 3-5/8" METAL STUD @ 16 O.C. W/ 5/8" GYP. BOARD BOTH SIDES EXTEND TO DECK W/ DEFLECTION TRACK. (SEE DETAIL D5/AE501)

DEMOLITION LEGEND

- EXISTING CAPET & BASE TO BE DEMOLISHED, TYPICAL
- EXISTING VCT& RUBBER BASE TO BE DEMOLISHED, TYPICAL
- EXISTING HOLLOW METAL FRAME, WOOD DOOR & HARDWARE TO BE DEMOLISHED, TYPICAL
- EXISTING OVERHEAD DOOR & HARDWARE TO BE DEMOLISHED, TYPICAL
- EXISTING STAIRS, AND HANDRAIL/GUARDRAIL TO BE REMOVED.
- EXISTING SUSPENDED CEILING TILE & GRID TO BE DEMOLISHED, TYPICAL
- EXISTING HARDLID CEILING TO BE DEMOLISHED, TYPICAL
- EXISTING SHEETROCK CEILINGS TO BE DEMOLISHED, TYPICAL
- SAWCUT & DEMOLISH EXISTING CONCRETE FLOOR AS REQUIRED TO ACCOMMODATE NEW FOOTINGS AND FOUNDATIONS, RE: STRUCTURAL
- EXISTING PLUMBING UTILITIES TO BE DEMOLISHED

NOTE: SEE MECHANICAL & ELECTRICAL DRAWINGS FOR ADDITIONAL DEMOLITION

KEY PLAN

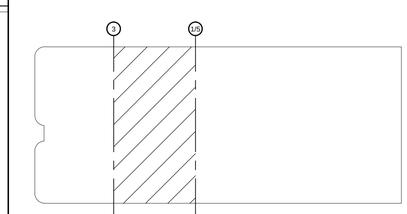

N

BUILDING OFFICIAL STAMP

DIVISION OF FACILITIES CONSTRUCTION AND MANAGEMENT
REVIEWED FOR CODE COMPLIANCE
SIGNATURE: FC
DATE: 4-23-13

HFSArchitects
ARCHITECTURE
INTERIORS
PLANNING

350 South 200 East, Suite 106
Salt Lake City, Utah 84111
801-596-0691/F: 596-0693
www.hfsa.com

STAMP

STATE OF UTAH
KRISTEN IRELAND VOROS
No. 7557079-0301
LICENSED ARCHITECT

CONSULTANT INFO

MOUNTAINLAND APPLIED TECHNOLOGY COLLEGE PHASE 2

GENEVA BUILDING REMODEL
1410 BUSINESS PARK DRIVE
OREM, UTAH 84058

MARK	DATE	DESCRIPTION

DATE:	APRIL 19, 2013
AGENCY PROJECT NO:	09163260
HFSA PROJECT NO:	1204.01
CAD DWG FILE NO:	
DRAWN BY:	KV
CHECKED BY:	KV
DESIGNED BY:	KV
DWG TYPE:	ARCHITECTURAL
ARCHITECTURAL PHASE:	PERMIT SET

SHEET TITLE

FIRST FLOOR DEMO PLAN

AD101

3

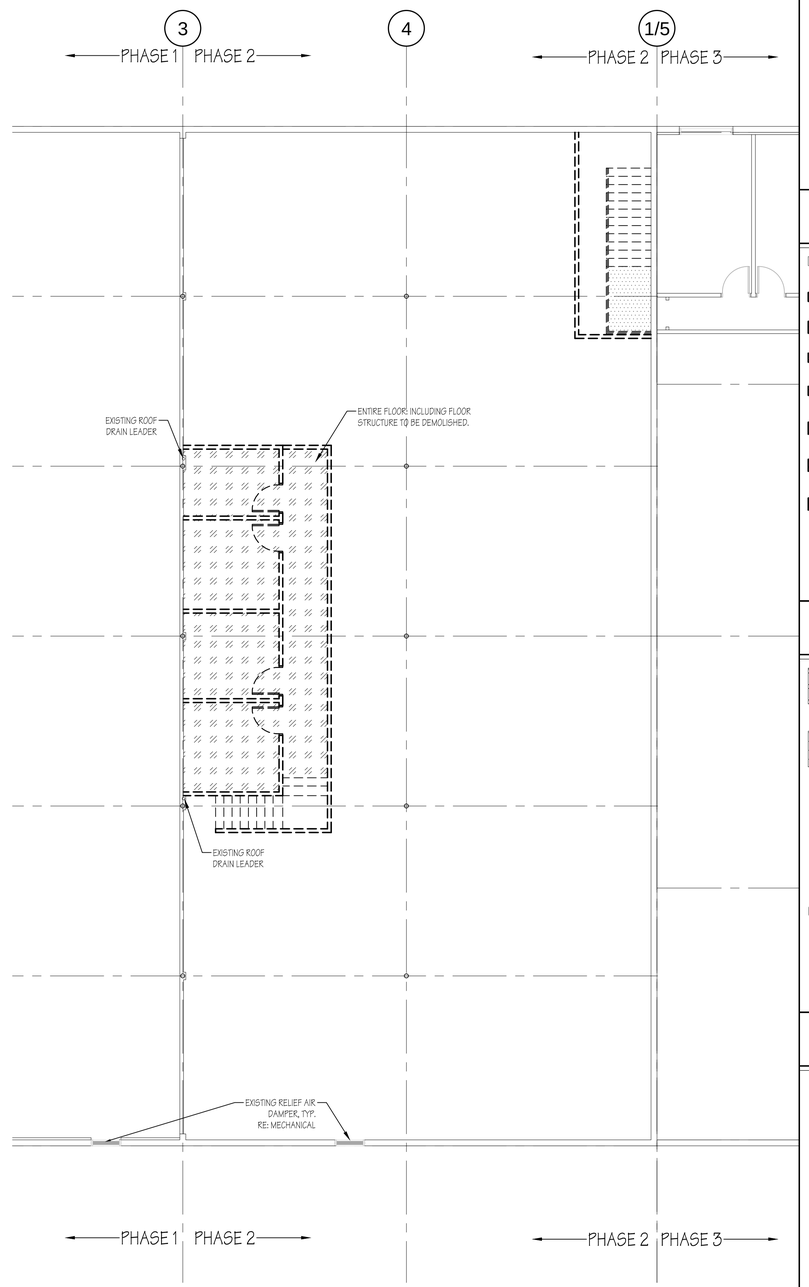

A4 SECOND FLOOR DEMO PLAN
1/8" = 1'-0"

GENERAL NOTES

1. ALL DIMENSIONS & EXISTING CONDITIONS IN AREAS OF WORK ARE TO BE FIELD VERIFIED PRIOR TO COMMENCING WORK - ANY DISCREPANCIES ARE TO BE REPORTED TO THE ARCHITECT OR ENGINEER OF RECORD PRIOR TO COMMENCING WORK.

2. PROTECT ALL AREAS & SURFACES ADJACENT TO DEMOLITION & CONSTRUCTION. PATCH & REPAIR ANY DAMAGE RESULTING FROM THE DEMOLITION OF EXISTING ITEMS OR THE CONSTRUCTION OF NEW ITEMS.

3. NOTED AREAS INDICATED THE GENERAL EXTENT OF DEMOLITION. THE CONTRACTOR'S CHOICE OF MEANS & METHODS OF CONSTRUCTION MAY REQUIRE MORE OR LESS DEMOLITION. THE MEANS & METHODS OF DEMOLITION & CONSTRUCTION MUST BE ACCOUNTED FOR IN THE CONTRACTORS BID. ANY DEMOLITION & REPAIR TO ADJACENT SURFACES BEYOND THE AREAS INDICATED IN THE CONTRACT DOCUMENTS WILL NOT BE COMPENSATED FOR AFTER THE BID OPENING.

4. 72-HOUR NOTICE IS REQUIRED FOR ANY UTILITY SHUT DOWN.

5. SEE MECHANICAL & ELECTRICAL DRAWINGS FOR ADDITIONAL INFORMATION & COORDINATE.

6. GC TO FINISH BOTH SIDES OF WALL DIVIDING PHASE 1 FROM 2, AND PHASE 2 FROM 3.

PARTITION LEGEND

- EXISTING WALL TO REMAIN, TYPICAL
- EXISTING 3-5/8" METAL STUDS W/ (1) LAYER GYPSUM BOARD BOTH SIDES TO BE DEMOLISHED, TYPICAL
- EXISTING CMU/CONCRETE WALL TO BE DEMOLISHED
- NEW 3-5/8" METAL STUD @ 16" O.C. W/ 5/8" GYPSUM BOARD BOTH SIDES WALL, TYPICAL
- NEW 3-5/8" METAL STUD @ 16" O.C. W/ 5/8" GYPSUM BOARD ONE ONE SIDE, TYPICAL
- NEW 3-5/8" METAL STUD SPACED 1" FROM EXISTING CMU WALL @ 16" O.C. W/ FULL BATT INSULATION TO 6"ABOVE CEILING HEIGHT W/ 5/8 " GYPSUM BOARD TO 6" ABOVE FINISH CEILING BRACED TO STRUCTURE @ 4'-0" O.C.,
- NEW CMU BLOCK WALL INFILL. CONTRACTOR TO MATCH EXISTING CMU SIZE, TYPE, COLOR AND GROUT LINES. SEE DETAIL A1/AE602 AND STRUCTURAL
- NEW 3-5/8" METAL STUD @ 16 O.C. W/ 5/8" GYP. BOARD BOTH SIDES EXTEND TO DECK W/ DEFLECTION TRACK. (SEE DETAIL D5/AE501)

DEMOLITION LEGEND

- EXISTING CAPET & BASE TO BE DEMOLISHED, TYPICAL
- EXISTING VCT& RUBBER BASE TO BE DEMOLISHED, TYPICAL
- EXISTING HOLLOW METAL FRAME, WOOD DOOR & HARDWARE TO BE DEMOLISHED, TYPICAL
- EXISTING OVERHEAD DOOR & HARDWARE TO BE DEMOLISHED, TYPICAL
- EXISTING STAIRS, AND HANDRAIL/GUARDRAIL TO BE REMOVED.
- EXISTING SUSPENDED CEILING TILE & GRID TO BE DEMOLISHED, TYPICAL
- EXISTING HARDLID CEILING TO BE DEMOLISHED, TYPICAL
- EXISTING SHEETROCK CEILINGS TO BE DEMOLISHED, TYPICAL
- SAWCUT & DEMOLISH EXISTING CONCRETE FLOOR AS REQUIRED TO ACCOMMODATE NEW FOOTINGS AND FOUNDATIONS, RE: STRUCTURAL
- EXISTING PLUMBING UTILITIES TO BE DEMOLISHED

NOTE: SEE MECHANICAL & ELECTRICAL DRAWINGS FOR ADDITIONAL DEMOLITION

KEY PLAN

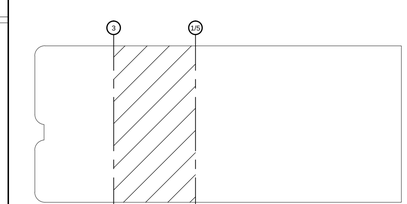

N

BUILDING OFFICIAL STAMP

DIVISION OF FACILITIES CONSTRUCTION AND MANAGEMENT
REVIEWED FOR CODE COMPLIANCE
SIGNATURE: FC
DATE: 4-23-13

HFSArchitects
ARCHITECTURE
INTERIORS
PLANNING

350 South 200 East, Suite 106
Salt Lake City, Utah 84111
801-596-0691/F: 596-0693
www.hfsa.com

STAMP

STATE OF UTAH
KRISTEN IRELAND VOROS
No. 7557079-0301
LICENSED ARCHITECT

CONSULTANT INFO

MOUNTAINLAND APPLIED TECHNOLOGY COLLEGE PHASE 2

GENEVA BUILDING REMODEL
1410 BUSINESS PARK DRIVE
OREM, UTAH 84058

MARK	DATE	DESCRIPTION

DATE:	APRIL 19, 2013
AGENCY PROJECT NO:	09163260
HFSA PROJECT NO:	1204.01
CAD DWG FILE NO:	
DRAWN BY:	KV
CHECKED BY:	KV
DESIGNED BY:	KV
DWG TYPE:	ARCHITECTURAL
ARCHITECTURAL PHASE:	PERMIT SET

SHEET TITLE

SECOND FLOOR DEMO PLAN

AD102

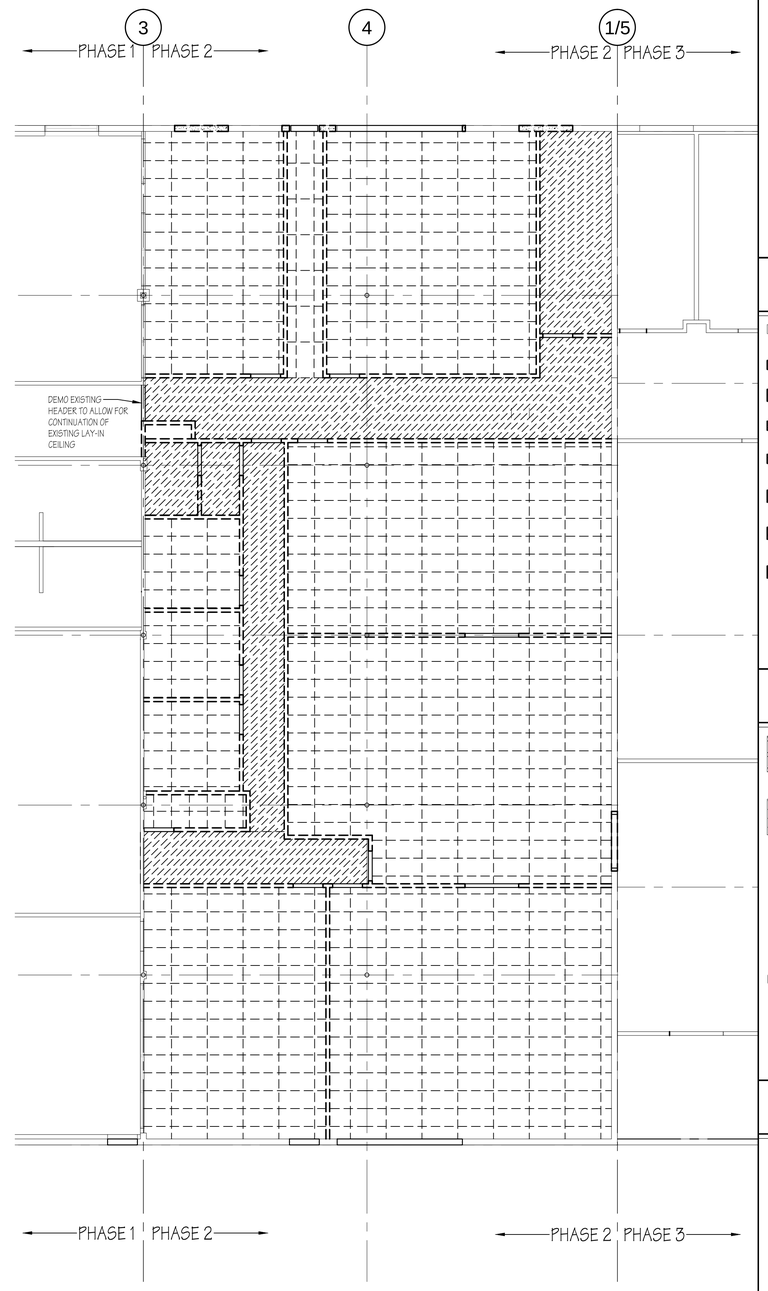

A4 FIRST FLOOR CEILING DEMO PLAN
1/8" = 1'-0"

GENERAL NOTES

1. ALL DIMENSIONS & EXISTING CONDITIONS IN AREAS OF WORK ARE TO BE FIELD VERIFIED PRIOR TO COMMENCING WORK - ANY DISCREPANCIES ARE TO BE REPORTED TO THE ARCHITECT OR ENGINEER OF RECORD PRIOR TO COMMENCING WORK.

2. PROTECT ALL AREAS & SURFACES ADJACENT TO DEMOLITION & CONSTRUCTION. PATCH & REPAIR ANY DAMAGE RESULTING FROM THE DEMOLITION OF EXISTING ITEMS OR THE CONSTRUCTION OF NEW ITEMS.

3. NOTED AREAS INDICATED THE GENERAL EXTENT OF DEMOLITION. THE CONTRACTOR'S CHOICE OF MEANS & METHODS OF CONSTRUCTION MAY REQUIRE MORE OR LESS DEMOLITION. THE MEANS & METHODS OF DEMOLITION & CONSTRUCTION MUST BE ACCOUNTED FOR IN THE CONTRACTORS BID. ANY DEMOLITION & REPAIR TO ADJACENT SURFACES BEYOND THE AREAS INDICATED IN THE CONTRACT DOCUMENTS WILL NOT BE COMPENSATED FOR AFTER THE BID OPENING.

4. 72-HOUR NOTICE IS REQUIRED FOR ANY UTILITY SHUT DOWN.

5. SEE MECHANICAL & ELECTRICAL DRAWINGS FOR ADDITIONAL INFORMATION & COORDINATE.

6. GC TO FINISH BOTH SIDES OF WALL DIVIDING PHASE 1 FROM 2, AND PHASE 2 FROM 3.

PARTITION LEGEND

- EXISTING WALL TO REMAIN, TYPICAL
- EXISTING 3-5/8" METAL STUDS W/ (1) LAYER GYPSUM BOARD BOTH SIDES TO BE DEMOLISHED, TYPICAL
- EXISTING CMU/CONCRETE WALL TO BE DEMOLISHED
- NEW 3-5/8" METAL STUD @ 16" O.C. W/ 5/8" GYPSUM BOARD BOTH SIDES WALL, TYPICAL
- NEW 3-5/8" METAL STUD @ 16" O.C. W/ 5/8" GYPSUM BOARD ONE ONE SIDE, TYPICAL
- NEW 3-5/8" METAL STUD SPACED 1" FROM EXISTING CMU WALL @ 16" O.C. W/ FULL BATT INSULATION TO 6"ABOVE CEILING HEIGHT W/ 5/8 " GYPSUM BOARD TO 6" ABOVE FINISH CEILING BRACED TO STRUCTURE @ 4'-0" O.C.,
- NEW CMU BLOCK WALL INFILL. CONTRACTOR TO MATCH EXISTING CMU SIZE, TYPE, COLOR AND GROUT LINES. SEE DETAIL A1/AE602 AND STRUCTURAL
- NEW 3-5/8" METAL STUD @ 16 O.C. W/ 5/8" GYP. BOARD BOTH SIDES EXTEND TO DECK W/ DEFLECTION TRACK. (SEE DETAIL D5/AE501)

DEMOLITION LEGEND

- EXISTING CAPET & BASE TO BE DEMOLISHED, TYPICAL
- EXISTING VCT& RUBBER BASE TO BE DEMOLISHED, TYPICAL
- EXISTING HOLLOW METAL FRAME, WOOD DOOR & HARDWARE TO BE DEMOLISHED, TYPICAL
- EXISTING OVERHEAD DOOR & HARDWARE TO BE DEMOLISHED, TYPICAL
- EXISTING STAIRS, AND HANDRAIL/GUARDRAIL TO BE REMOVED.
- EXISTING SUSPENDED CEILING TILE & GRID TO BE DEMOLISHED, TYPICAL
- EXISTING HARDLID CEILING TO BE DEMOLISHED, TYPICAL
- EXISTING SHEETROCK CEILINGS TO BE DEMOLISHED, TYPICAL
- SAWCUT & DEMOLISH EXISTING CONCRETE FLOOR AS REQUIRED TO ACCOMMODATE NEW FOOTINGS AND FOUNDATIONS, RE: STRUCTURAL
- EXISTING PLUMBING UTILITIES TO BE DEMOLISHED

NOTE: SEE MECHANICAL & ELECTRICAL DRAWINGS FOR ADDITIONAL DEMOLITION

KEY PLAN

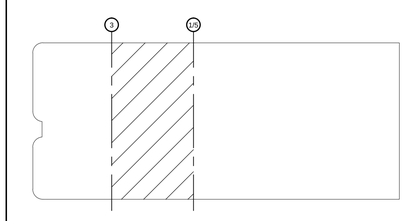

N

BUILDING OFFICIAL STAMP

DIVISION OF FACILITIES CONSTRUCTION AND MANAGEMENT
REVIEWED FOR CODE COMPLIANCE
SIGNATURE: FC
DATE: 4-23-13

HFSArchitects
ARCHITECTURE
INTERIORS
PLANNING

350 South 200 East, Suite 106
Salt Lake City, Utah 84111
801-596-0691/F: 596-0693
www.hfsa.com

STAMP

STATE OF UTAH
KRISTEN IRELAND VOROS
No. 7557079-0301
LICENSED ARCHITECT

CONSULTANT INFO

MOUNTAINLAND APPLIED TECHNOLOGY COLLEGE PHASE 2

GENEVA BUILDING REMODEL
1410 BUSINESS PARK DRIVE
OREM, UTAH 84058

MARK	DATE	DESCRIPTION

DATE:	APRIL 19, 2013
AGENCY PROJECT NO:	09163260
HFSA PROJECT NO:	1204.01
CAD DWG FILE NO:	
DRAWN BY:	KV
CHECKED BY:	KV
DESIGNED BY:	KV
DWG TYPE:	ARCHITECTURAL
ARCHITECTURAL PHASE:	PERMIT SET

SHEET TITLE

FIRST FLOOR CEILING DEMO PLAN

AD103

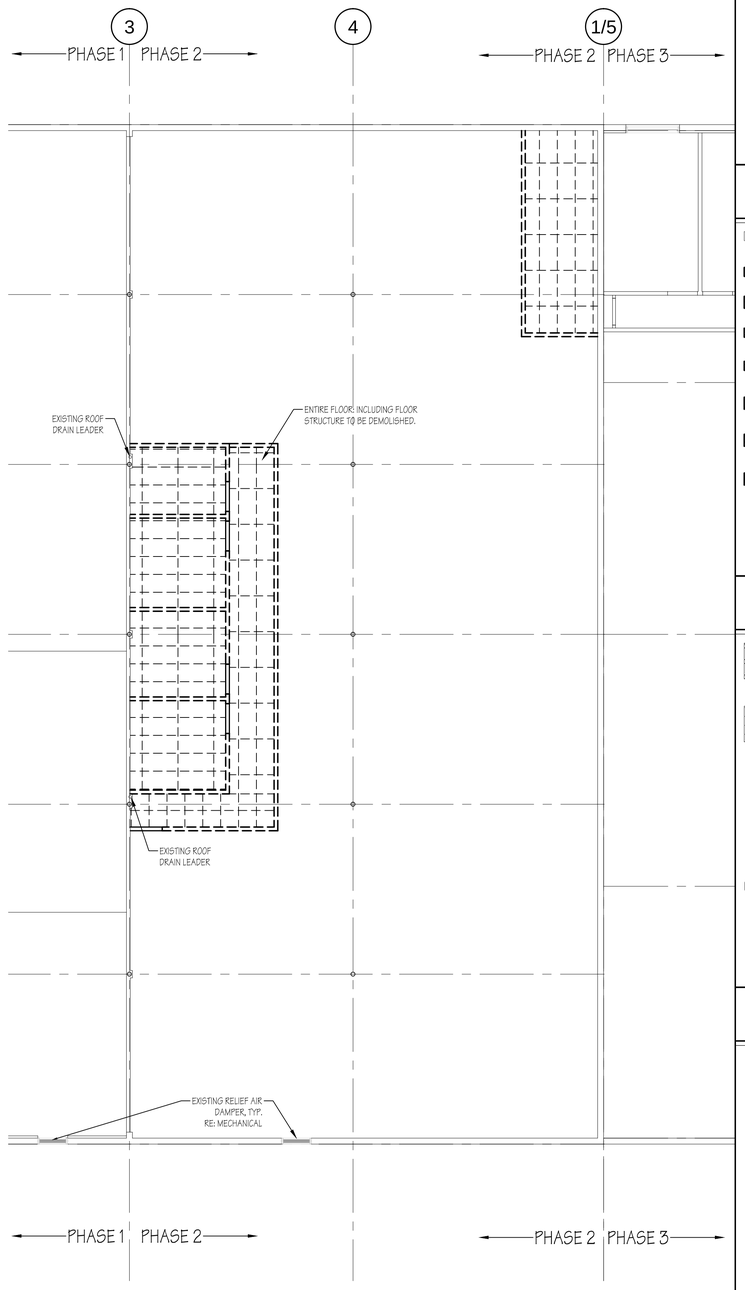

A4 SECOND FLOOR CEILING DEMO PLAN
1/8" = 1'-0"

GENERAL NOTES

1. ALL DIMENSIONS & EXISTING CONDITIONS IN AREAS OF WORK ARE TO BE FIELD VERIFIED PRIOR TO COMMENCING WORK - ANY DISCREPANCIES ARE TO BE REPORTED TO THE ARCHITECT OR ENGINEER OF RECORD PRIOR TO COMMENCING WORK.

2. PROTECT ALL AREAS & SURFACES ADJACENT TO DEMOLITION & CONSTRUCTION. PATCH & REPAIR ANY DAMAGE RESULTING FROM THE DEMOLITION OF EXISTING ITEMS OR THE CONSTRUCTION OF NEW ITEMS.

3. NOTED AREAS INDICATED THE GENERAL EXTENT OF DEMOLITION. THE CONTRACTOR'S CHOICE OF MEANS & METHODS OF CONSTRUCTION MAY REQUIRE MORE OR LESS DEMOLITION. THE MEANS & METHODS OF DEMOLITION & CONSTRUCTION MUST BE ACCOUNTED FOR IN THE CONTRACTORS BID. ANY DEMOLITION & REPAIR TO ADJACENT SURFACES BEYOND THE AREAS INDICATED IN THE CONTRACT DOCUMENTS WILL NOT BE COMPENSATED FOR AFTER THE BID OPENING.

4. 72-HOUR NOTICE IS REQUIRED FOR ANY UTILITY SHUT DOWN.

5. SEE MECHANICAL & ELECTRICAL DRAWINGS FOR ADDITIONAL INFORMATION & COORDINATE.

6. GC TO FINISH BOTH SIDES OF WALL DIVIDING PHASE 1 FROM 2, AND PHASE 2 FROM 3.

PARTITION LEGEND

- EXISTING WALL TO REMAIN, TYPICAL
- EXISTING 3-5/8" METAL STUDS W/ (1) LAYER GYPSUM BOARD BOTH SIDES TO BE DEMOLISHED, TYPICAL
- EXISTING CMU/CONCRETE WALL TO BE DEMOLISHED
- NEW 3-5/8" METAL STUD @ 16" O.C. W/ 5/8" GYPSUM BOARD BOTH SIDES WALL, TYPICAL
- NEW 3-5/8" METAL STUD @ 16" O.C. W/ 5/8" GYPSUM BOARD ONE ONE SIDE, TYPICAL
- NEW 3-5/8" METAL STUD SPACED 1" FROM EXISTING CMU WALL @ 16" O.C. W/ FULL BATT INSULATION TO 6"ABOVE CEILING HEIGHT W/ 5/8 " GYPSUM BOARD TO 6" ABOVE FINISH CEILING BRACED TO STRUCTURE @ 4'-0" O.C.,
- NEW CMU BLOCK WALL INFILL. CONTRACTOR TO MATCH EXISTING CMU SIZE, TYPE, COLOR AND GROUT LINES. SEE DETAIL A1/AE602 AND STRUCTURAL
- NEW 3-5/8" METAL STUD @ 16 O.C. W/ 5/8" GYP. BOARD BOTH SIDES EXTEND TO DECK W/ DEFLECTION TRACK. (SEE DETAIL D5/AE501)

DEMOLITION LEGEND

- EXISTING CARPET & BASE TO BE DEMOLISHED, TYPICAL
- EXISTING VCT& RUBBER BASE TO BE DEMOLISHED, TYPICAL
- EXISTING HOLLOW METAL FRAME, WOOD DOOR & HARDWARE TO BE DEMOLISHED, TYPICAL
- EXISTING OVERHEAD DOOR & HARDWARE TO BE DEMOLISHED, TYPICAL
- EXISTING STAIRS, AND HANDRAIL/GUARDRAIL TO BE REMOVED.
- EXISTING SUSPENDED CEILING TILE & GRID TO BE DEMOLISHED, TYPICAL
- EXISTING HARDLID CEILING TO BE DEMOLISHED, TYPICAL
- EXISTING SHEETROCK CEILINGS TO BE DEMOLISHED, TYPICAL
- SAWCUT & DEMOLISH EXISTING CONCRETE FLOOR AS REQUIRED TO ACCOMMODATE NEW FOOTINGS AND FOUNDATIONS, RE: STRUCTURAL
- EXISTING PLUMBING UTILITIES TO BE DEMOLISHED

NOTE: SEE MECHANICAL & ELECTRICAL DRAWINGS FOR ADDITIONAL DEMOLITION

KEY PLAN

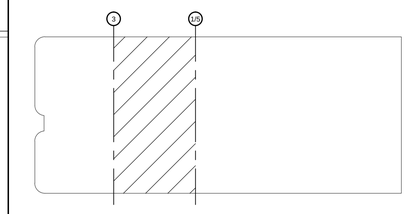

BUILDING OFFICIAL STAMP

DIVISION OF FACILITIES CONSTRUCTION AND MANAGEMENT
REVIEWED FOR CODE COMPLIANCE
SIGNATURE: FC
DATE: 4-23-13

HFSArchitects
ARCHITECTURE
INTERIORS
PLANNING

350 South 200 East, Suite 106
Salt Lake City, Utah 84111
801-596-0691/F: 596-0693
www.hfsa.com

STAMP

STATE OF UTAH
KRISTEN IRELAND VOROS
No. 7557079-0301
LICENSED ARCHITECT

CONSULTANT INFO

MOUNTAINLAND APPLIED TECHNOLOGY COLLEGE PHASE 2

GENEVA BUILDING REMODEL
1410 BUSINESS PARK DRIVE
OREM, UTAH 84058

MARK	DATE	DESCRIPTION

DATE:	APRIL 19, 2013
AGENCY PROJECT NO:	09163260
HFSA PROJECT NO:	1204.01
CAD DWG FILE NO:	
DRAWN BY:	KV
CHECKED BY:	KV
DESIGNED BY:	KV
DWG TYPE:	ARCHITECTURAL
ARCHITECTURAL PHASE:	PERMIT SET

SHEET TITLE

SECOND FLOOR CEILING DEMO PLAN

AD104

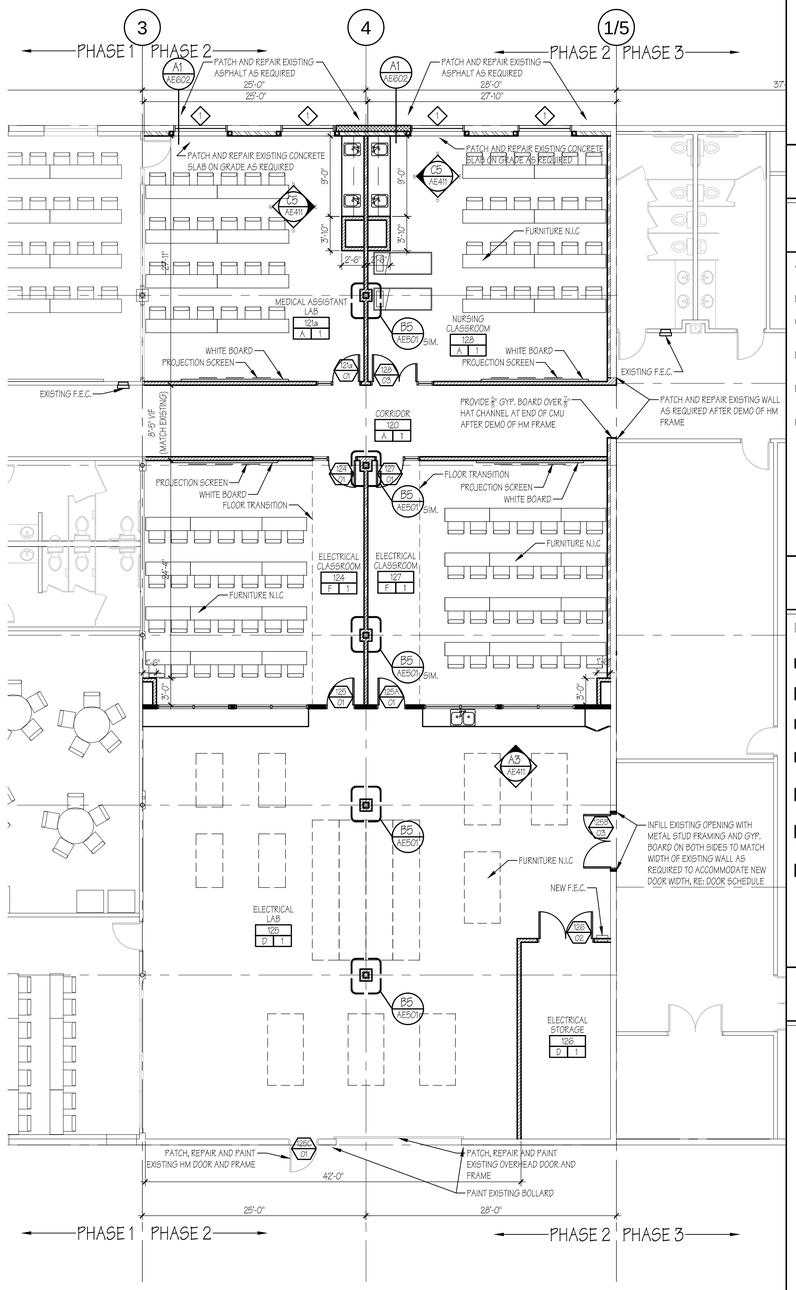

A4 FIRST FLOOR PLAN
1/8" = 1'-0"

GENERAL NOTES

1. ALL DIMENSIONS & EXISTING CONDITIONS IN AREAS OF WORK ARE TO BE FIELD VERIFIED PRIOR TO COMMENCING WORK - ANY DISCREPANCIES ARE TO BE REPORTED TO THE ARCHITECT OR ENGINEER OF RECORD PRIOR TO COMMENCING WORK.

2. PROTECT ALL AREAS & SURFACES ADJACENT TO DEMOLITION & CONSTRUCTION. PATCH & REPAIR ANY DAMAGE RESULTING FROM THE DEMOLITION OF EXISTING ITEMS OR THE CONSTRUCTION OF NEW ITEMS.

3. NOTED AREAS INDICATED THE GENERAL EXTENT OF DEMOLITION. THE CONTRACTOR'S CHOICE OF MEANS & METHODS OF CONSTRUCTION MAY REQUIRE MORE OR LESS DEMOLITION. THE MEANS & METHODS OF DEMOLITION & CONSTRUCTION MUST BE ACCOUNTED FOR IN THE CONTRACTOR'S BID. ANY DEMOLITION & REPAIR TO ADJACENT SURFACES BEYOND THE AREAS INDICATED IN THE CONTRACT DOCUMENTS WILL NOT BE COMPENSATED FOR AFTER THE BID OPENING.

4. 72-HOUR NOTICE IS REQUIRED FOR ANY UTILITY SHUT DOWN.

5. SEE MECHANICAL & ELECTRICAL DRAWINGS FOR ADDITIONAL INFORMATION & COORDINATE.

6. GC TO FINISH BOTH SIDES OF WALL DIVIDING PHASE 1 FROM 2, AND PHASE 2 FROM 3.

FINISH LEGEND

ROOM NAME
RM NUM
FLOOR / BASE — F | W — WALL / WAINSCOT

A. NEW CARPET TILE & RUBBER BASE (SEE SPECIFICATIONS)
B. NEW CERAMIC TILE FLOOR WITH CERAMIC TILE BASE
C. NEW VCT FLOOR WITH RUBBER BASE (SEE SPECIFICATIONS)
D. PAINTED CONCRETE FLOOR WITH RUBBER BASE (SEE SPECIFICATIONS)
E. EXISTING CARPET TO REMAIN. CONTRACTOR TO PROTECT FROM DAMAGE DURING DEMOLITION.
F. NEW CARPET TILES & RUBBER BASE W/ VCT WALKWAY. (SEE PLANS FOR LOCATION OF TRANSITION)

1. GYPSUM BOARD WALLS TO BE PAINTED
2. GYPSUM BOARD WALLS TO BE PAINTED W/ ONE WALL TO BE AN ACCENT COLOR, COORDINATE W/ OWNER
3. GYPSUM BOARD WALLS WITH 4-1/4" x 4-1/4" CERAMIC TILE TO CEILING.
4. EXISTING BLOCK WALLS TO BE PAINTED.

PARTITION LEGEND

- EXISTING WALL TO REMAIN, TYPICAL
- EXISTING 3-5/8" METAL STUDS W/ (1) LAYER GYPSUM BOARD BOTH SIDES TO BE DEMOLISHED, TYPICAL
- EXISTING CMU/CONCRETE WALL TO BE DEMOLISHED
- NEW 3-5/8" METAL STUD @ 16" O.C. W/ 5/8" GYPSUM BOARD BOTH SIDES WALL, TYPICAL
- NEW 3-5/8" METAL STUD @ 16" O.C. W/ 5/8" GYPSUM BOARD ONE ONE SIDE, TYPICAL
- NEW 3-5/8" METAL STUD SPACED 1" FROM EXISTING CMU WALL @ 16" O.C. W/ FULL BATT INSULATION TO 6" ABOVE CEILING HEIGHT W/ 5/8 " GYPSUM BOARD TO 6" ABOVE FINISH CEILING BRACED TO STRUCTURE @ 4'-0" O.C.,
- NEW CMU BLOCK WALL INFILL. CONTRACTOR TO MATCH EXISTING CMU SIZE, TYPE, COLOR AND GROUT LINES. SEE DETAIL A1/AE602 AND STRUCTURAL
- NEW 3-5/8" METAL STUD @ 16 O.C. W/ 5/8" GYP. BOARD BOTH SIDES EXTEND TO DECK W/ DEFLECTION TRACK. (SEE DETAIL D5/AE501)

KEY PLAN

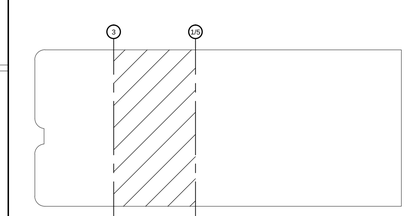

BUILDING OFFICIAL STAMP

DIVISION OF FACILITIES CONSTRUCTION AND MANAGEMENT
REVIEWED FOR CODE COMPLIANCE
SIGNATURE: FC
DATE: 4-23-13

HFSArchitects
ARCHITECTURE
INTERIORS
PLANNING

350 South 200 East, Suite 106
Salt Lake City, Utah 84111
801-596-0691/F: 596-0693
www.hfsa.com

STAMP

STATE OF UTAH
KRISTEN IRELAND VOROS
No. 7557079-0301
LICENSED ARCHITECT

CONSULTANT INFO

MOUNTAINLAND APPLIED TECHNOLOGY COLLEGE PHASE 2

GENEVA BUILDING REMODEL
1410 BUSINESS PARK DRIVE
OREM, UTAH 84058

MARK	DATE	DESCRIPTION

DATE:	APRIL 19, 2013
AGENCY PROJECT NO:	09163260
HFSA PROJECT NO:	1204.01
CAD DWG FILE NO:	
DRAWN BY:	KV
CHECKED BY:	KV
DESIGNED BY:	KV
DWG TYPE:	ARCHITECTURAL
ARCHITECTURAL PHASE:	PERMIT SET

SHEET TITLE

FIRST FLOOR FLOOR PLAN

AE101

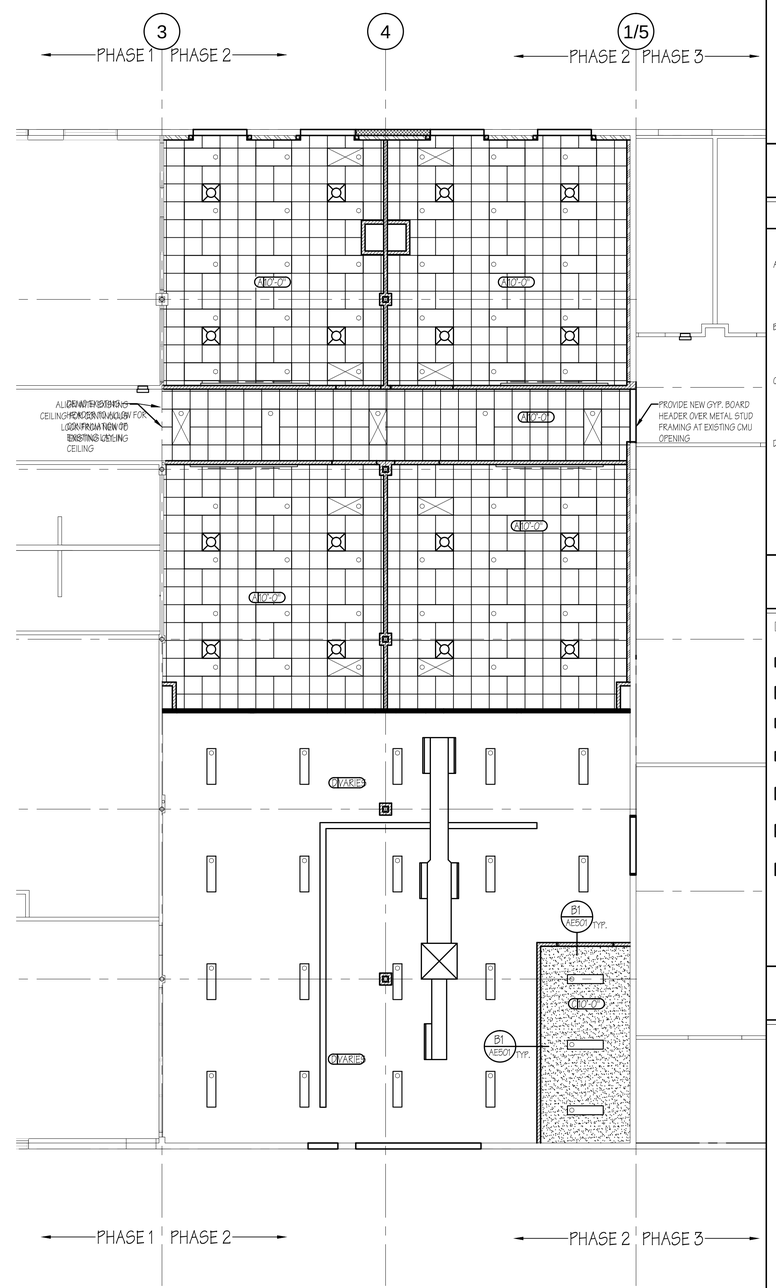

A4 FIRST FLOOR REFLECTED CEILING
1/8" = 1'-0"

GENERAL NOTES

1. ALL DIMENSIONS & EXISTING CONDITIONS IN AREAS OF WORK ARE TO BE FIELD VERIFIED PRIOR TO COMMENCING WORK - ANY DISCREPANCIES ARE TO BE REPORTED TO THE ARCHITECT OR ENGINEER OF RECORD PRIOR TO COMMENCING WORK.

2. PROTECT ALL AREAS & SURFACES ADJACENT TO DEMOLITION & CONSTRUCTION. PATCH & REPAIR ANY DAMAGE RESULTING FROM THE DEMOLITION OF EXISTING ITEMS OR THE CONSTRUCTION OF NEW ITEMS.

3. NOTED AREAS INDICATED THE GENERAL EXTENT OF DEMOLITION. THE CONTRACTOR'S CHOICE OF MEANS & METHODS OF CONSTRUCTION MAY REQUIRE MORE OR LESS DEMOLITION. THE MEANS & METHODS OF DEMOLITION & CONSTRUCTION MUST BE ACCOUNTED FOR IN THE CONTRACTORS BID. ANY DEMOLITION & REPAIR TO ADJACENT SURFACES BEYOND THE AREAS INDICATED IN THE CONTRACT DOCUMENTS WILL NOT BE COMPENSATED FOR AFTER THE BID OPENING.

4. 72-HOUR NOTICE IS REQUIRED FOR ANY UTILITY SHUT DOWN.

5. SEE MECHANICAL & ELECTRICAL DRAWINGS FOR ADDITIONAL INFORMATION & COORDINATE.

6. GC TO FINISH BOTH SIDES OF WALL DIVIDING PHASE 1 FROM 2, AND PHASE 2 FROM 3.

CEILING PLAN LEGEND

CEILING FINISH — A10'-0" — CEILING ELEVATION

A. NEW SUSPENDED 2X2 LAY-IN CEILING PANELS & GRID, TYPICAL. SEE DETAILS ON SHEET AE501

B. NOT USED

C. NEW GYPSUM BOARD CEILING

D. OPEN TO STRUCTURE ABOVE

INSTALL NEW 2X4 LIGHT FIXTURE, SEE ELECTRICAL DRAWINGS, TYPICAL

INSTALL NEW 1X4 LIGHT FIXTURE, SEE ELECTRICAL DRAWINGS, TYPICAL

NEW MECHANICAL SUPPLY GRILLE, SEE MECHANICAL DRAWINGS FOR FURTHER INSTRUCTIONS, TYPICAL

NEW MECHANICAL RETURN GRILLE, SEE MECHANICAL DRAWINGS FOR FURTHER INSTRUCTIONS, TYPICAL

PARTITION LEGEND

- EXISTING WALL TO REMAIN, TYPICAL
- EXISTING 3-5/8" METAL STUDS W/ (1) LAYER GYPSUM BOARD BOTH SIDES TO BE DEMOLISHED, TYPICAL
- EXISTING CMU/CONCRETE WALL TO BE DEMOLISHED
- NEW 3-5/8" METAL STUD @ 16" O.C. W/ 5/8" GYPSUM BOARD BOTH SIDES WALL, TYPICAL
- NEW 3-5/8" METAL STUD @ 16" O.C. W/ 5/8" GYPSUM BOARD ONE ONE SIDE, TYPICAL
- NEW 3-5/8" METAL STUD SPACED 1" FROM EXISTING CMU WALL @ 16" O.C. W/ FULL BATT INSULATION TO 6"ABOVE CEILING HEIGHT W/ 5/8 " GYPSUM BOARD TO 6" ABOVE FINISH CEILING BRACED TO STRUCTURE @ 4'-0" O.C.,
- NEW CMU BLOCK WALL INFILL. CONTRACTOR TO MATCH EXISTING CMU SIZE, TYPE, COLOR AND GROUT LINES. SEE DETAIL A1/AE602 AND STRUCTURAL
- NEW 3-5/8" METAL STUD @ 16 O.C. W/ 5/8" GYP. BOARD BOTH SIDES EXTEND TO DECK W/ DEFLECTION TRACK. (SEE DETAIL D5/AE501)

KEY PLAN

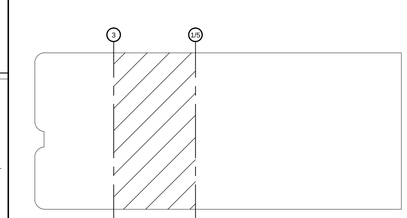

BUILDING OFFICIAL STAMP

DIVISION OF FACILITIES CONSTRUCTION AND MANAGEMENT
REVIEWED FOR CODE COMPLIANCE
SIGNATURE: FC
DATE: 4-23-13

HFSArchitects
ARCHITECTURE
INTERIORS
PLANNING

350 South 200 East, Suite 106
Salt Lake City, Utah 84111
801-596-0691/F: 596-0693
www.hfsa.com

STAMP

STATE OF UTAH
KRISTEN IRELAND VOROS
No. 7557079-0301
LICENSED ARCHITECT

CONSULTANT INFO

MOUNTAINLAND APPLIED TECHNOLOGY COLLEGE PHASE 2

GENEVA BUILDING REMODEL
1410 BUSINESS PARK DRIVE
OREM, UTAH 84058

MARK	DATE	DESCRIPTION

DATE:	APRIL 19, 2013
AGENCY PROJECT NO:	09163260
HFSA PROJECT NO:	1204.01
CAD DWG FILE NO:	
DRAWN BY:	KV
CHECKED BY:	KV
DESIGNED BY:	KV
DWG TYPE:	ARCHITECTURAL
ARCHITECTURAL PHASE:	PERMIT SET

SHEET TITLE

FIRST FLOOR REFLECTED CEILING FLOOR PLAN

AE111

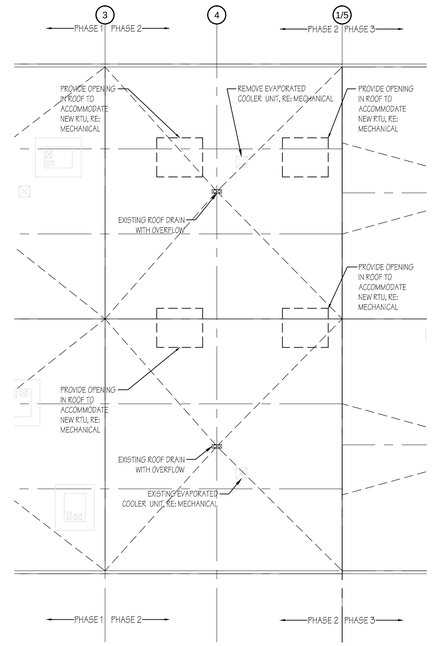

C4 DEMO ROOF PLAN
1/16" = 1'-0"

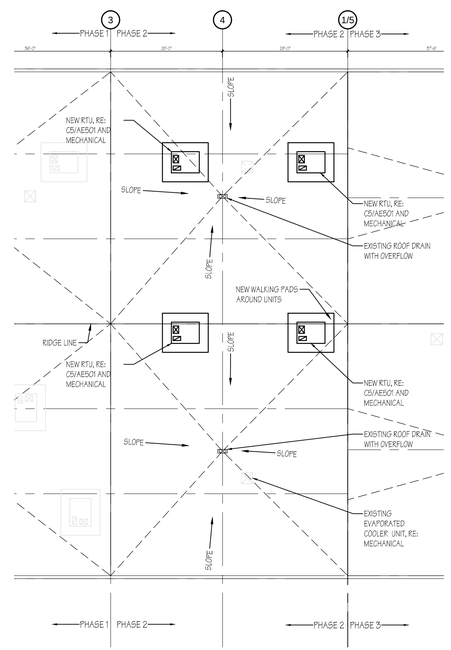

A4 NEW ROOF PLAN
1/16" = 1'-0"

GENERAL NOTES

1. ALL DIMENSIONS & EXISTING CONDITIONS IN AREAS OF WORK ARE TO BE FIELD VERIFIED PRIOR TO COMMENCING WORK - ANY DISCREPANCIES ARE TO BE REPORTED TO THE ARCHITECT OR ENGINEER OF RECORD PRIOR TO COMMENCING WORK.

2. PROTECT ALL AREAS & SURFACES ADJACENT TO DEMOLITION & CONSTRUCTION. PATCH & REPAIR ANY DAMAGE RESULTING FROM THE DEMOLITION OF EXISTING ITEMS OR THE CONSTRUCTION OF NEW ITEMS.

3. NOTED AREAS INDICATED THE GENERAL EXTENT OF DEMOLITION. THE CONTRACTOR'S CHOICE OF MEANS & METHODS OF CONSTRUCTION MAY REQUIRE MORE OR LESS DEMOLITION. THE MEANS & METHODS OF DEMOLITION & CONSTRUCTION MUST BE ACCOUNTED FOR IN THE CONTRACTORS BID. ANY DEMOLITION & REPAIR TO ADJACENT SURFACES BEYOND THE AREAS INDICATED IN THE CONTRACT DOCUMENTS WILL NOT BE COMPENSATED FOR AFTER THE BID OPENING.

4. 72-HOUR NOTICE IS REQUIRED FOR ANY UTILITY SHUT DOWN.

5. SEE MECHANICAL & ELECTRICAL DRAWINGS FOR ADDITIONAL INFORMATION & COORDINATE.

6. GC TO FINISH BOTH SIDES OF WALL DIVIDING PHASE 1 FROM 2, AND PHASE 2 FROM 3.

KEY PLAN

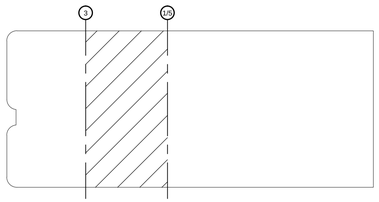

BUILDING OFFICIAL STAMP

DIVISION OF FACILITIES CONSTRUCTION AND MANAGEMENT
REVIEWED FOR CODE COMPLIANCE
SIGNATURE: FC
DATE: 4-23-13

HFSArchitects
ARCHITECTURE
INTERIORS
PLANNING

350 South 200 East, Suite 106
Salt Lake City, Utah 84111
801-596-0691/F: 596-0693
www.hfsa.com

STAMP

STATE OF UTAH
KRISTEN IRELAND VOROS
No. 7557079-0301
LICENSED ARCHITECT

CONSULTANT INFO

MOUNTAINLAND APPLIED TECHNOLOGY COLLEGE PHASE 2

GENEVA BUILDING REMODEL
1410 BUSINESS PARK DRIVE
OREM, UTAH 84058

MARK	DATE	DESCRIPTION

DATE:	APRIL 19, 2013
AGENCY PROJECT NO:	09163260
HFSA PROJECT NO:	1204.01
CAD DWG FILE NO:	
DRAWN BY:	KV
CHECKED BY:	KV
DESIGNED BY:	KV
DWG TYPE:	ARCHITECTURAL
ARCHITECTURAL PHASE:	PERMIT SET

SHEET TITLE

ARCHITECTURAL ROOF PLAN

AE121

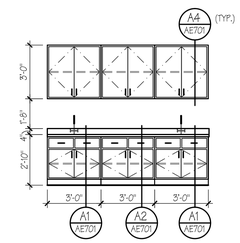

C5 TYPICAL CLASSROOM CABINET ELEV.
1/4" = 1'-0"

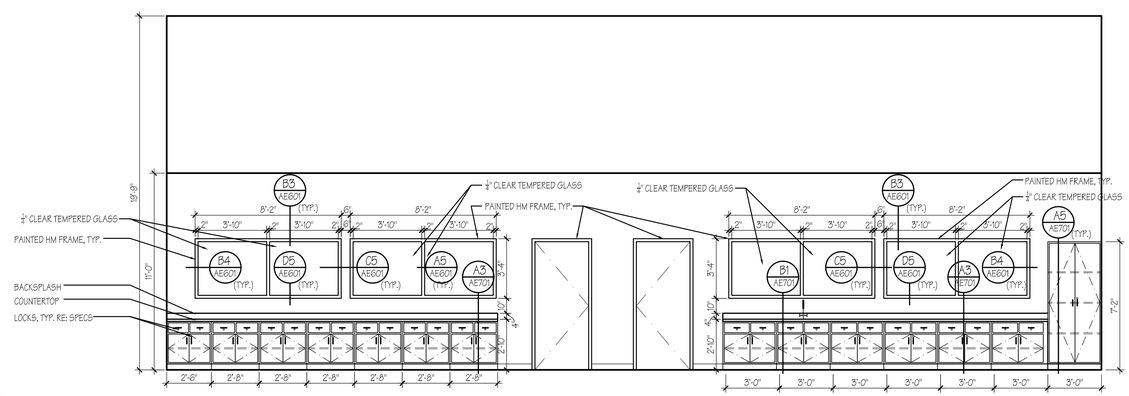

A3 ELECTRICAL LAB ELEVATION
1/4" = 1'-0"

BUILDING OFFICIAL STAMP

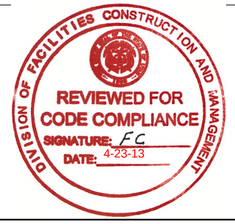

HFSArchitects

ARCHITECTURE
INTERIORS
PLANNING

350 South 200 East, Suite 106
Salt Lake City, Utah 84111
801-596-0691/F: 596-0693
www.hfsa.com

STAMP

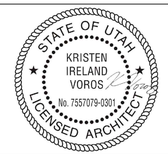

CONSULTANT INFO

MOUNTAINLAND APPLIED TECHNOLOGY COLLEGE PHASE 2

GENEVA BUILDING REMODEL
1410 BUSINESS PARK DRIVE
OREM, UTAH 84058

MARK	DATE	DESCRIPTION

DATE:	APRIL 19, 2013
AGENCY PROJECT NO:	09163260
HFSA PROJECT NO:	1204.01
CAD DWG FILE NO:	
DRAWN BY:	KV
CHECKED BY:	KV
DESIGNED BY:	KV
DWG TYPE:	ARCHITECTURAL
ARCHITECTURAL PHASE:	PERMIT SET

SHEET TITLE

INTERIOR ELEVATIONS

AE411

10

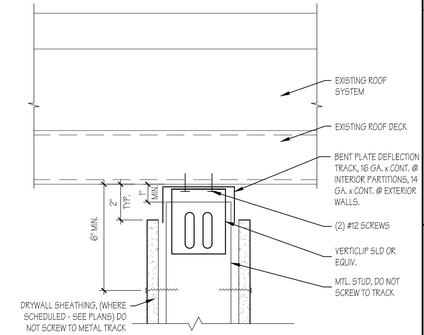

D5 DEFLECTION TRACK DETAIL
3" = 1'-0"

COMPRESSION STRUT SIZING	
EMT (ELECTRICAL METALLIC TUBING)	
DIAMETER	SPAN
1/2"	TO 2'-8"
3/4"	TO 4'-4"
1"	TO 6'-7"
FOR ALL SPANS ABOVE 6'-7" SEE DETAILS B2 & B3/AE501	
NOTE: FLATTEN ENDS OF CONDUIT. CONNECT TO "T"-BAR MAIN RUNNER WITH, (1) #10 TEK SCREW. CONNECT TO JOIST TOP CHORD, WITH (2) #10 TEK SCREWS	

C2 COMPRESSION STRUT SIZING SCHED.
N.T.S.

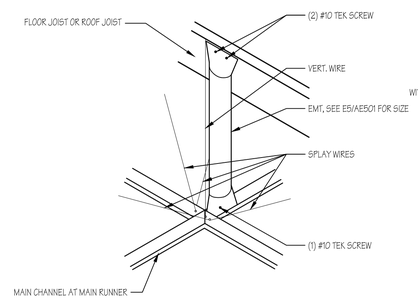

C3 CELING ANCHOR SYSTEM
3" = 1'-0"

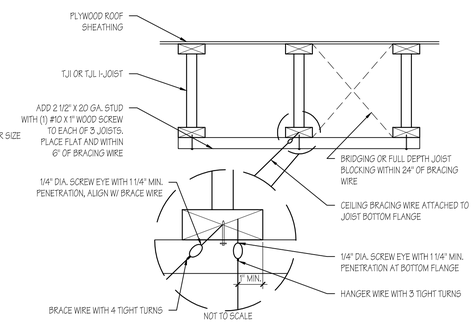

C4 WIRE TO JOIST CONNECTION DETAIL
3/4" = 1'-0"

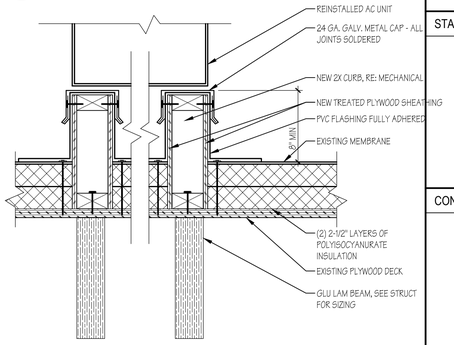

C5 AC UNIT CURB DETAIL
1-1/2" = 1'-0"

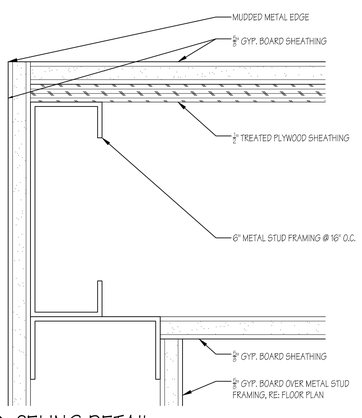

B1 CELING DETAIL
6" = 1'-0"

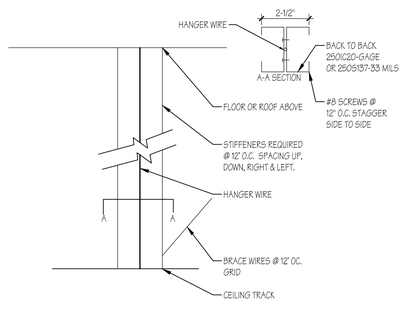

B2 CELING STRUT DETAIL
3" = 1'-0"

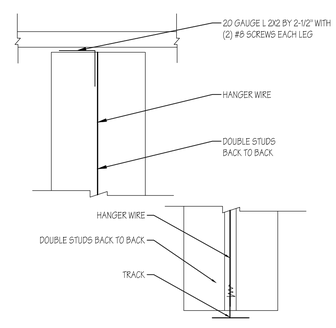

B3 CELING STRUT DETAIL
3" = 1'-0"

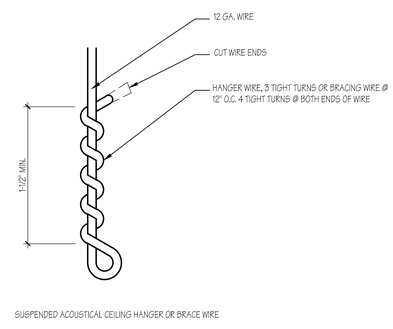

B4 CELING DETAIL
N.T.S.

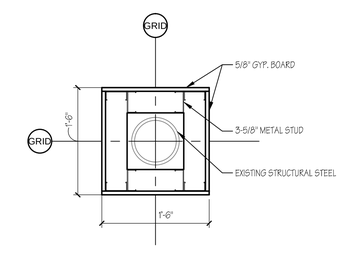

B5 COLUMN ENCLOSURE DETAIL
1" = 1'-0"

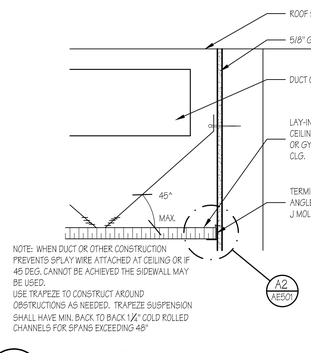

A1 CELING DETAIL
3" = 1'-0"

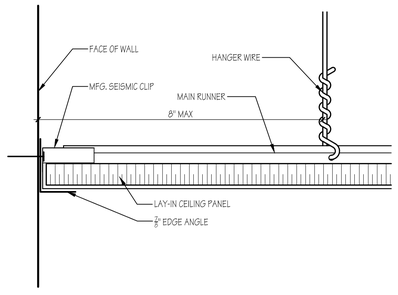

A2 CELING DETAIL
6" = 1'-0"

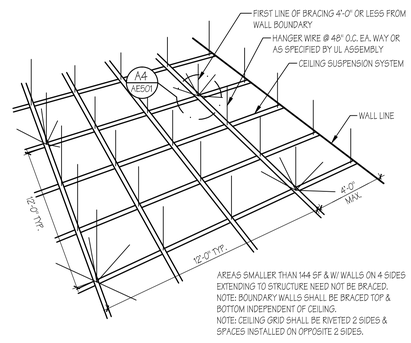

A3 CELING DETAIL
N.T.S.

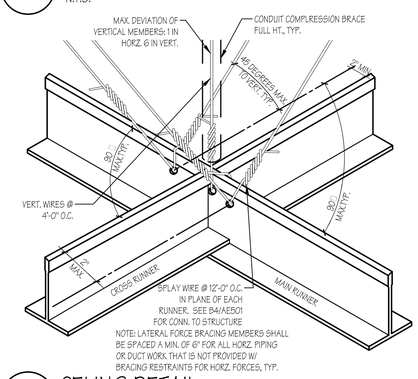

A4 CELING DETAIL
N.T.S.

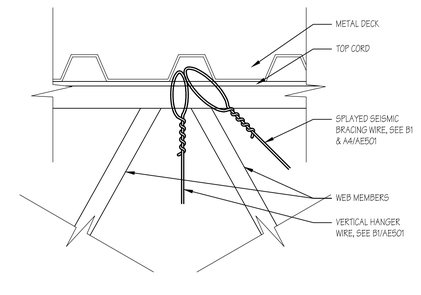

A5 CELING DETAIL
3" = 1'-0"

BUILDING OFFICIAL STAMP

DIVISION OF FACILITIES CONSTRUCTION AND MANAGEMENT
REVIEWED FOR CODE COMPLIANCE
SIGNATURE: FC
DATE: 4-23-13

HFSArchitects
ARCHITECTURE
INTERIORS
PLANNING
350 South 200 East, Suite 106
Salt Lake City, Utah 84111
801-596-0691/F: 596-0693
www.hfsa.com

STAMP

STATE OF UTAH
KRISTEN IRELAND VOROS
No. 7557079-0301
LICENSED ARCHITECT

CONSULTANT INFO

MOUNTAINLAND APPLIED TECHNOLOGY COLLEGE PHASE 2

GENEVA BUILDING REMODEL
1410 BUSINESS PARK DRIVE
OREM, UTAH 84058

MARK	DATE	DESCRIPTION

DATE:	APRIL 19, 2013
AGENCY PROJECT NO:	09163260
HFSA PROJECT NO:	1204.01
CAD DWG FILE NO:	
DRAWN BY:	KV
CHECKED BY:	KV
DESIGNED BY:	KV
DWG TYPE:	ARCHITECTURAL
ARCHITECTURAL PHASE:	PERMIT SET

SHEET TITLE

ARCHITECTURAL CELING DETAILS

AE501

PHASE 2 DOOR SCHEDULE

DOOR NUMB.	DOOR						FRAME							COMMENTS
	TYPE	MATERIAL	FIINISH	DOOR SIZE			TYPE	MATERIAL	FINISH	UL LABEL	DETAILS			
				W	H	T					H	J	T	
121A	A	SCWD	PRE.FIN.	3'-0"	7'-0"	1-3/4"	1	H.M.	PAINTED	--	A3/AE601	A4/AE601	--	
124	A	SCWD	PRE.FIN.	3'-0"	7'-0"	1-3/4"	1	H.M.	PAINTED	--	A3/AE601	A4/AE601	--	
125	D	SCWD	PRE.FIN.	3'-0"	7'-0"	1-3/4"	2	H.M.	PAINTED	--	A3/AE601	A4/AE601	--	
125A	D	SCWD	PRE.FIN.	3'-0"	7'-0"	1-3/4"	2	H.M.	PAINTED	--	A3/AE601	A4/AE601	--	
125B	C	SCWD	PRE.FIN.	(2) 3'-0" PR	7'-0"	1-3/4"	3	H.M.	PAINTED	--	A3/AE601	A4/AE601	--	
125C	A	EXIST	RE-PAINT	EXIST	EXIST	EXIST	2	EXIST	RE-PAINT	--	EXIST	EXIST	EXIST	PATCH, REPAIR AND PAINT EXISTING DOOR AND FRAME. PROVIDE NEW HARDWARE
126	C	SCWD	PRE.FIN.	(2) 3'-0" PR	7'-0"	1-3/4"	3	H.M.	PAINTED	1-HOUR	A3/AE601	A4/AE601	--	
127	A	SCWD	PRE.FIN.	3'-0"	7'-0"	1-3/4"	1	H.M.	PAINTED	--	A3/AE601	A4/AE601	--	
128	B	SCWD	PRE.FIN.	3'-0" & 2'-0" PR	7'-0"	1-3/4"	4	H.M.	PAINTED	--	A3/AE601	A4/AE601	--	

B1 DOOR SCHEDULE
1/4" = 1'-0"

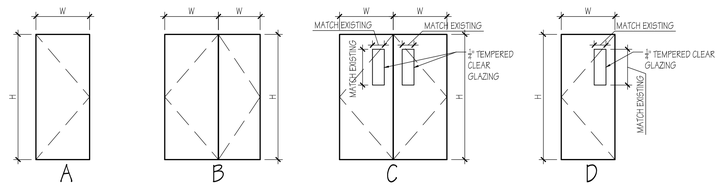

C3 DOOR TYPES
1/4" = 1'0"

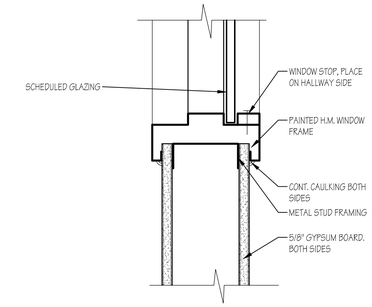

D5 WINDOW SILL DETAIL
3" = 1'-0"

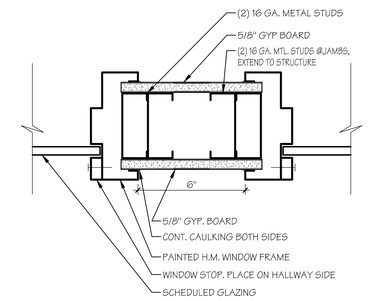

C5 WINDOW TO WINDOW JAMB DETAIL
3" = 1'-0"

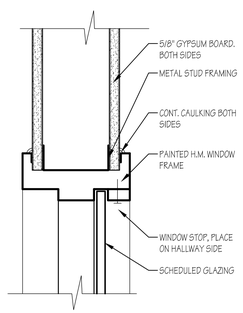

B3 WINDOW HEADER DETAIL
3" = 1'-0"

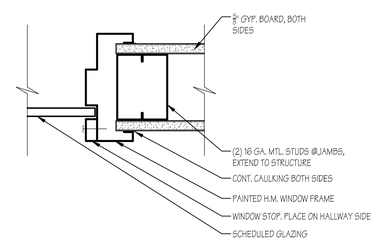

B4 WINDOW JAMB DETAIL
3" = 1'-0"

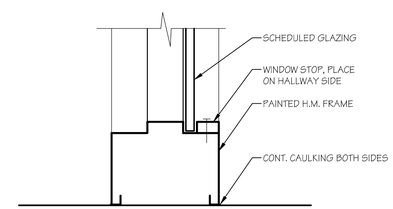

B5 SIDELITE SILL DETAIL
3" = 1'-0"

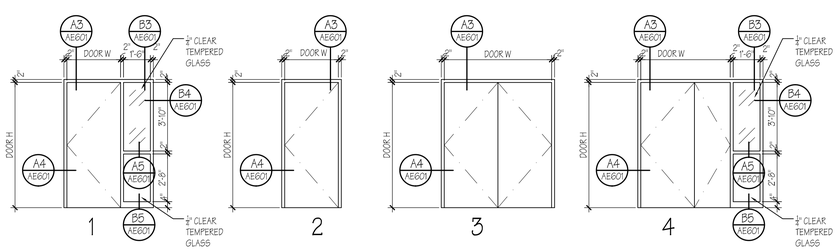

A1 DOOR FRAME TYPES
1/4" = 1'-0"

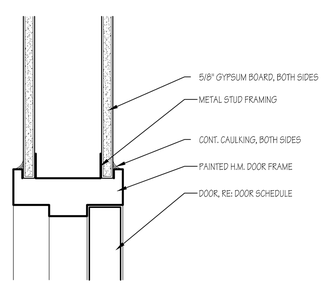

A3 DOOR HEADER DETAIL
3" = 1'-0"

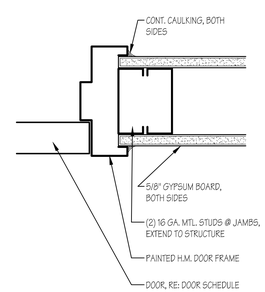

A4 DOOR FRAME DETAIL
3" = 1'-0"

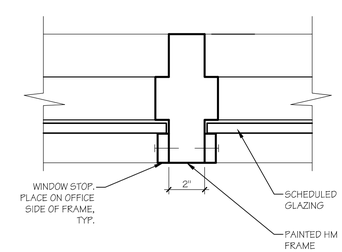

A5 WINDOW FRAME DETAIL
3" = 1'-0"

BUILDING OFFICIAL STAMP

DIVISION OF FACILITIES CONSTRUCTION AND MANAGEMENT
REVIEWED FOR CODE COMPLIANCE
SIGNATURE: FC
DATE: 4-23-13

HFSArchitects
ARCHITECTURE
INTERIORS
PLANNING
350 South 200 East, Suite 106
Salt Lake City, Utah 84111
801-596-0691/F: 596-0693
www.hfsa.com

STAMP

STATE OF UTAH
KRISTEN IRELAND VOROS
No. 7557079-0301
LICENSED ARCHITECT

CONSULTANT INFO

MOUNTAINLAND APPLIED TECHNOLOGY COLLEGE PHASE 2

GENEVA BUILDING REMODEL
1410 BUSINESS PARK DRIVE
OREM, UTAH 84058

MARK	DATE	DESCRIPTION

DATE:	APRIL 19, 2013
AGENCY PROJECT NO:	09163260
HFSA PROJECT NO:	1204.01
CAD DWG FILE NO:	
DRAWN BY:	KV
CHECKED BY:	KV
DESIGNED BY:	KV
DWG TYPE:	ARCHITECTURAL
ARCHITECTURAL PHASE:	PERMIT SET

SHEET TITLE

DOOR SCHEDULE/ DOOR DETAILS

AE601

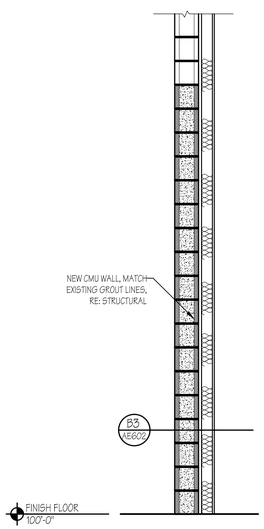

A1 WINDOW SECTION
1/4" = 1'-0"

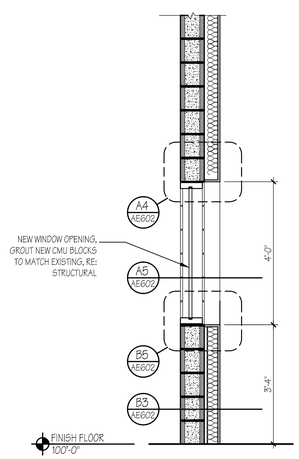

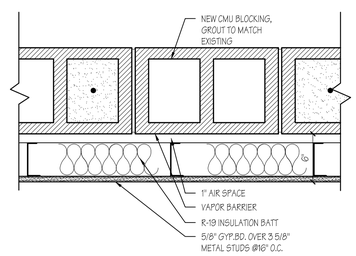

B3 WALL SECTION
3" = 1'-0"

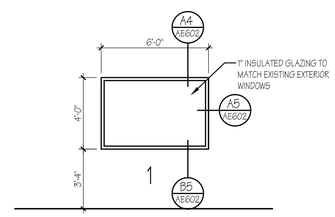

B4 WINDOW TYPE DETAIL
1/4" = 1'-0"

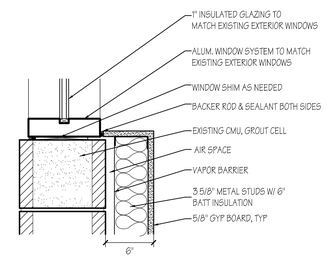

B5 WINDOW SILL DETAIL
3" = 1'-0"

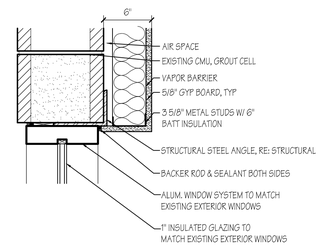

A4 WINDOW HEADER DETAIL
3" = 1'-0"

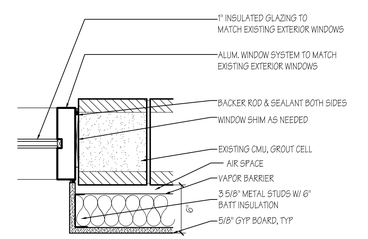

A5 WINDOW JAMB DETAIL
3" = 1'-0"

BUILDING OFFICIAL STAMP

DIVISION OF FACILITIES CONSTRUCTION AND MANAGEMENT
REVIEWED FOR CODE COMPLIANCE
SIGNATURE: FC
DATE: 4-23-13

HFSArchitects
ARCHITECTURE
INTERIORS
PLANNING

350 South 200 East, Suite 106
Salt Lake City, Utah 84111
801-596-0691/F: 596-0693
www.hfsa.com

STAMP

STATE OF UTAH
KRISTEN IRELAND VOROS
No. 7557079-0301
LICENSED ARCHITECT

CONSULTANT INFO

MOUNTAINLAND APPLIED TECHNOLOGY COLLEGE PHASE 2

GENEVA BUILDING REMODEL
1410 BUSINESS PARK DRIVE
OREM, UTAH 84058

MARK	DATE	DESCRIPTION

DATE:	APRIL 19, 2013
AGENCY PROJECT NO:	09163260
HFSA PROJECT NO:	1204.01
CAD DWG FILE NO:	
DRAWN BY:	KV
CHECKED BY:	KV
DESIGNED BY:	KV
DWG TYPE:	ARCHITECTURAL
ARCHITECTURAL PHASE:	PERMIT SET

SHEET TITLE

WINDOW TYPES/ WINDOW DETAILS

AE602

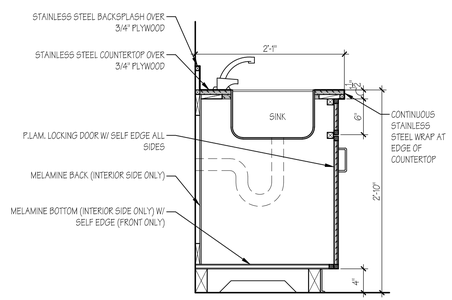

B1 CASEWORK DETAIL
1" = 1'-0"

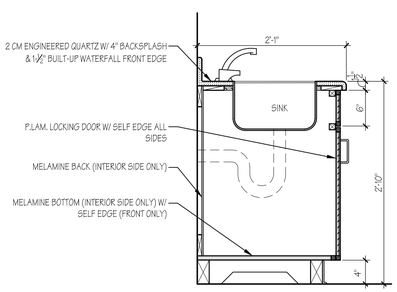

A1 CASEWORK DETAIL
1" = 1'-0"

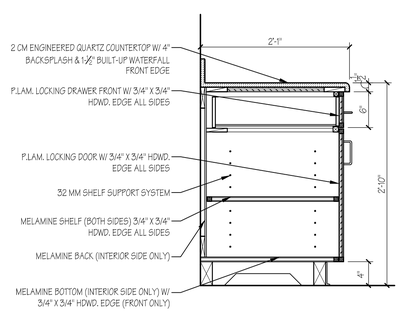

A2 CASEWORK DETAIL
1" = 1'-0"

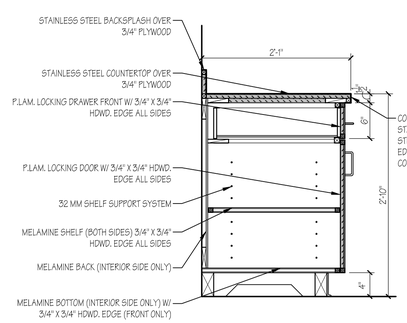

A3 CASEWORK DETAIL
1" = 1'-0"

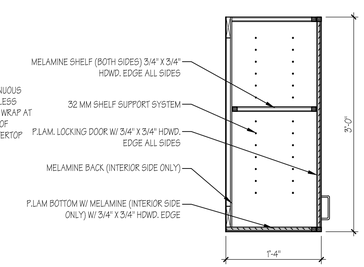

A4 UPPEER CASEWORK DETAIL
1" = 1'-0"

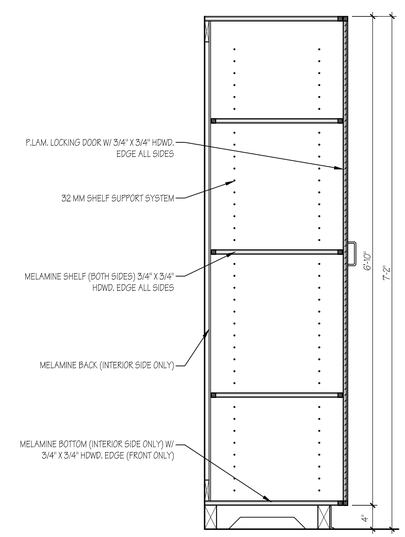

A5 UPPEER CASEWORK DETAIL
1" = 1'-0"

BUILDING OFFICIAL STAMP

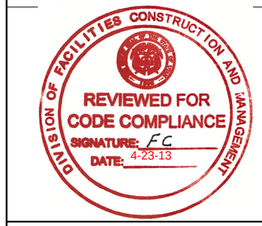

HFS*Architects*

ARCHITECTURE
INTERIORS
PLANNING

350 South 200 East, Suite 106
Salt Lake City, Utah 84111
801-596-0691/F: 596-0693
www.hfsa.com

STAMP

CONSULTANT INFO

MOUNTAINLAND APPLIED TECHNOLOGY COLLEGE PHASE 2

GENEVA BUILDING REMODEL
1410 BUSINESS PARK DRIVE
OREM, UTAH 84058

MARK	DATE	DESCRIPTION

DATE:	APRIL 19, 2013
AGENCY PROJECT NO:	09163260
HFSA PROJECT NO:	1204.01
CAD DWG FILE NO:	
DRAWN BY:	KV
CHECKED BY:	KV
DESIGNED BY:	KV
DWG TYPE:	ARCHITECTURAL
ARCHITECTURAL PHASE:	PERMIT SET

SHEET TITLE

ARCHITECTURAL CASEWORK DETAILS

AE701

GENERAL CONCRETE NOTES:

1. ALL WORK SHALL BE IN STRICT ACCORDANCE WITH THE 2009 IBC, ACI 318, AND LOCAL ORDINANCES.
2. CONTRACTOR SHALL COORDINATE WITH MECHANICAL, ELECTRICAL, AND ARCHITECTURALPRIOR TO PLACING CONCRETE. PROVIDE SLEEVES, BLOCK OUTS, ETC., AS REQUIRED.
3. CONTRACTOR SHALL BE RESPONSIBLE FOR PROPER PLACEMENT OF ALL ANCHOR BOLTS, SEISMIC ANCHORS OR STRAPS, ETC.. INSTALL PER MANUFACTURER'S SPECIFICATIONS.

CONCRETE MATERIAL

1. REQUIRED 28 DAY COMPRESSIVE STRENGTH OF CONCRETE:
   A. FOOTINGS AND FOUNDATIONS: 3000 PSI
   B. INTERIOR SLABS ON GRADE: 3000 PSI
   C. WALLS: 4000 PSI
   D. SITE CONCRETE: 4000 PSI
2. PROVIDE NORMAL WEIGHT AGGREGATES PER ASTM C-33.
3. PROVIDE TYPE I OR II CEMENT PER ASTM C-150 FOR ALL CONCRETE.
4. MAXIMUM WATER TO CEMENT RATIO IS EQUAL TO 0.45 FOR ALL CONCRETE.
5. MAXIMUM SLUMP OF CONCRETE IS EQUAL TO 4 INCHES PLUS OR MINUS 1 INCH.
6. PROVIDE AIR ENTRAINING AS RECOMMENDED BY ACI 318 AND ASTM C-260.
7. NO NOT ADD CALCIUM CHLORIDE TO CONCRETE MIX.

REINFORCEMENT

1. ALL REINFORCING STEEL SHALL BE GRADE 60 BARS PER ASTM A615. FIELD BENT DOWELS MAY BE GRADE 40 (REDUCE INDICATED SPACING BY 1/3).
2. REINFORCING STEEL SHALL BE PROPERLY TIED INTO PLACE PRIOR TO PLACING CONCRETE.
3. ALL SPLICES IN REINFORCING BARS SHALL LAP A MINIMUM OF 40 BAR DIAMETERS.
4. HORIZONTAL REINFORCEMENT SHALL BE CONTINUOUS THRU CONSTRUCTION AND CONTROL JOINTS.
5. DO NOT WELD REINFORCING BARS.
6. REINFORCEMENT SHALL HAVE THE FOLLOWING CLEAR COVER:
   A. CAST-IN-PLACE CONCRETE:
      I. CAST AGAINST/PERMANENTLY EXPOSED TO EARTH 3"
      II. FORMED CONCRETE EXPOSED TO EARTH/WEATHER:
         a. #5 AND SMALLER BARS 1-1/2"
      III. CONCRETE NOT EXPOSED EARTH/WEATHER:
         a. SLABS, WALLS, JOISTS (#11 AND SMALLER) 3/4"
         b. BEAMS, COLUMNS, TIES, STIRRUPS 1-1/2"

FOUNDATION WALLS

1. BRACE WALLS AS REQUIRED UNTIL FLOOR SLABS AND/OR FLOOR FRAMING ARE IN PLACE, AND UNTIL WALLS HAVE PROPERLY CURED.
2. CONSTRUCTION JOINTS (COLD JOINTS) IN WALLS SHALL BE WATERPROOFED TO PREVENT LEAKS.
3. PROVIDE CORNER BARS AT INTERSECTING WALL CORNERS USING THE SAME BAR SIZE AND SPACING AS THE HORIZONTAL WALL REINFORCING.
4. PROVIDE VERTICAL DOWELS INTO FOOTINGS AND FOUNDATIONS THAT MATCH THE SIZE AND SPACING OF THE VERTICAL REINFORCEMENT IN THE ABOVE MEMBER.

SLABS

1. RECOMMEND REINFORCING ALL SLABS W/ #4 @ 18" O.C. EACH WAY, OR WITH 6 x 6 - 2.1x12.1 WELDED WIRE FABRIC (W.W.F.). REINFORCEMENT SHALL BE PLACED 1-1/2" TO 2" BELOW THE TOP OF SLAB.
2. PROVIDE ISOLATION JOINTS AROUND COLUMNS/SPREAD FOOTINGS, AND CONTROL JOINTS AS REQUIRED (I.E., WHERE SLABS TRANSITION IN SIZE).
3. CONSTRUCTION OR CONTROL JOINTS IN SLABS ON GRADE SHALL NOT EXCEED SPACING OF 30 TIMES THE SLAB THICKNESS IN ANY DIRECTION, UNLESS NOTED OTHERWISE ON THE PLAN.

GENERAL WOOD FRAMING NOTES:

DIMENSIONAL LUMBER

1. DIMENSIONAL LUMBER USED AS STRUCTURAL FRAMING (i.e. JOISTS, RAFTERS, and HEADERS) SHALL BE DOUGLAS FIR-LARCH NO. 2 OR EQUAL.
2. DIMENSIONAL LUMBER USED FOR STUD WALLS SHALL BE STUD GRADE. SPACE STUDS AT 16" O.C. MINIMUM, WITH A DOUBLE TOP PLATE. SPLICES IN THE DOUBLE TOP PLATE SHALL ALTERNATE TOP AND BOTTOM.
3. IN NO CASE SHALL 2 X 4" BEARING WALLS SUPPORT MORE THAN TWO FLOORS OF FRAMING IN ADDITION TO ROOF AND CEILING.

ENGINEERED LUMBER

1. GLU-LAMINATED BEAMS FOR SIMPLE SPANS, CANTILEVERS AND CONTINUOUS SPANS SHALL BE 24F-V4 DF/DF. DO NOT INSTALL GLU-LAMINATED BEAMS UPSIDE DOWN.
2. LAMINATED VENEER LUMBER AND THE LIKE SHALL BE INSTALLED PER MANUFACTURER'S RECOMMENDATIONS AND SPECIFICATIONS.
3. I-JOISTS SHALL BE TJI OR EQUIVALENT, AND SHALL BE INSTALLED PER MANUFACTURER'S RECOMMENDATIONS AND SPECIFICATIONS.
4. ENGINEERED LUMBER, WITH THE EXCEPTION OF GLU-LAMINATED LUMBER, SHALL NOT BE USED IN EXTERIOR APPLICATIONS.
5. USE REDWOOD OR PRESSURE TREATED LUMBER FOR ALL WOOD IN CONTACT WITH CONCRETE, MASONRY, OR EARTH (i.e. MUD SILL).

COLUMNS

1. ALL COLUMNS SHALL EXTEND DOWN THROUGH THE STRUCTURE TO THE FOUNDATION.
2. COLUMNS SHALL BE BRACED AT EACH FLOOR LEVEL.
3. POSTS SHALL BE DOUGLAS FIR-LARCH NO. 1 OR EQUAL.

ROOF AND WALL SHEATHING

1. ALL ROOF SHEATHING SHALL BE 5/8" APA EXP. 1 RATED SHEATHING OR EQUAL WITH 8d COMMON NAILS AT 6" O.C. PERIMETER, 6" O.C. PANEL EDGES AND AT 12" O.C. IN THE FIELD. PROVIDE 2 X SHAPED BLOCKING AT RIDGES UNLESS A CONTINUOUS MEMBER EXISTS. PANEL EDGES ARE UNBLOCKED UNLESS NOTED OTHERWISE ON THE STRUCTURAL PLANS.
2. ALL EXTERIOR WALLS SHALL BE SHEATHED WITH 7/16" APA EXP. 1 RATED SHEATHING OR EQUAL WITH 8d COMMON NAILS AT 6" O.C. EDGES AND AT 12" O.C. IN THE FIELD - FLAT BLOCKED AT ALL PANEL EDGES, UNLESS NOTED OTHERWISE IN THE STRUCTURAL PLANS AND SHEAR WALL SCHEDULE.

GENERAL STEEL NOTES

1. SUBMIT SHOP DRAWINGS OF ALL STRUCTURAL STEEL, TO THE ENGINEER FOR APPROVAL PRIOR TO FABRICATION.
2. ALL STEEL SHALL BE PROPERLY PRIMED EXCEPT AREAS THAT REQUIRE FIELD WELDING.
3. PROVIDE A STANDARD AISC FRAMED CONNECTION FOR ONE HALF THE BEAM'S TOTAL UNIFORM LOAD CAPACITY WHERE A CONNECTION IS NOT SHOWN.

MATERIALS

1. WIDE FLANGE SECTIONS: ASTM A992 (50 KSI).
2. OTHER SHAPES AND PLATES: ASTM A36.
3. TUBULAR COLUMNS: ASTM A500 GRADE B (46 KSI).
4. PIPE COLUMNS: ASTM A501 (36 KSI) OR A53 GRADE B.
5. DEFORMED BAR ANCHORS: ASTM A496
6. HEADED STUD ANCHORS: ASTM A108
7. ANCHOR BOLTS: ASTM A307
8. BOLTED CONNECTIONS: ASTM A325-N (3/4" DIAMETER MIN.)
9. WELDS: E70 XX AT ALL JOISTS

CONSTRUCTION

1. ALL WELDING AND CUTTING SHALL BE PERFORMED BY AWS CERTIFIED WELDERS.
2. ALL INTERSECTING STEEL SHAPES WHICH ARE NOT BOLTED SHALL BE CONNECTED BY A FILLET WELD ALL AROUND, UNLESS NOTED OTHERWISE.
3. FOR THICKNESSES 1/4" AND LARGER, WELD SIZES SHALL BE 1/16" LESS THAN THE THINNEST CONNECTED PART, UNLESS NOTED OTHERWISE. FOR THICKNESSES LESS THAN 1/4", WELD SIZE SHALL BE THE SAME SIZE AS THE THINNEST CONNECTED PART, UNLESS NOTED OTHERWISE.
4. TIGHTEN BOLTS BY THE TURN OF THE NUT, CALIBRATED WRENCH, OR DIRECT TENSION INDICATOR METHOD.
5. USE HARDENED WASHERS BENEATH THE TURNED ELEMENT OF ALL BOLTS OR NUTS.
6. DO NOT REUSE BOLTS, NUTS OR WASHERS.
7. STANDARD PENETRATIONS THROUGH STRUCTURAL MEMBERS FOR MECHANICAL, PLUMBING, ELECTRICAL SYSTEMS, ETC. SHALL BE PROVIDED ON THE CENTER LINE OF THE MEMBER'S DEPTH AND WITHIN THE MIDDLE ONE-THIRD OF THE SPAN. PENETRATIONS LARGER THAN STANDARD (OR GREATER THAN 1/3 THE BEAM DEPTH) ARE NOT PERMITTED WITHOUT PRIOR WRITTEN APPROVAL FROM THE ENGINEER.

GENERAL STRUCTURAL NOTES:

1. THE GENERAL CONTRACTOR, OR PROJECT MANAGER, SHALL COORDINATE THE WORK PERFORMED BY ALL TRADES, AND IS ULTIMATELY RESPONSIBLE FOR COMPLIANCE WITH ALL NOTED REQUIREMENTS.
2. TYPICAL DETAILS AND SCHEDULES SHALL APPLY WHERE SPECIFIC DETAILS ARE NOT SHOWN.
3. THE CONTRACTOR SHALL NOTIFY THE ENGINEER AND / OR ARCHITECT OF ANY DISCREPANCIES, OMISSIONS OR CONFLICTS BETWEEN THE VARIOUS ELEMENTS OF THE WORKING DRAWINGS AND / OR THE SPECIFICATIONS BEFORE PROCEEDING WITH THE FABRICATION OR CONSTRUCTION OF ANY EFFECTED ELEMENTS. IN CASE OF CONFLICT, THE MOST STRINGENT REQUIREMENTS SHALL GOVERN AND BE PERFORMED AT NO ADDITIONAL COST TO THE OWNER. ANY WORK DONE BY THE CONTRACTOR BEFORE RECEIVING THE ENGINEERS WRITTEN APPROVAL WILL BE AT THE CONTRACTOR'S RISK.
4. FAILURE TO FOLLOW PLANS AND CONSTRUCTION DOCUMENTS CONSTITUTES CHANGE IN PROJECT SCOPE. THE ENGINEER RESERVES THE RIGHT TO REQUEST REPLACEMENT OF ANY PORTION OF THE STRUCTURE DEVIATING FROM THE PLANS WHERE WRITTEN APPROVAL HAS NOT BEEN OBTAINED.
5. THE CONTRACTOR SHALL VERIFY ALL CONDITIONS, DIMENSIONS, SLOPES AND ELEVATIONS, ETC.. AT THE JOB SITE AND SHALL COORDINATE THESE WITH THE ARCHITECT AND ALL TRADES. CONSTRUCTION DRAWINGS SHALL NOT BE SCALED FOR DIMENSIONS.
6. DURING AND AFTER CONSTRUCTION, THE LOADS IMPOSED ON THE STRUCTURE BY THE CONTRACTOR AND OWNER SHALL BE WITHIN THE LIMITS OF THE OCCUPANCY DESIGN LOADS.
7. VISITS TO THE JOB SITE BY REPRESENTATIVES OF THE ENGINEER DO NOT CONSTITUTE APPROVAL OR SPECIAL INSPECTION OF THE WORK PERFORMED BY THE CONTRACTOR OR HIS SUBCONTRACTORS.

DESIGN CODE:

2009 INTERNATIONAL BUILDING CODE (IBC)

DESIGN CRITERIA:

FLAT ROOF SNOW LOAD Pf	= 30 PSF
SNOW EXPOSURE FACTOR, Ce	= 1.0
SNOW IMPORTANCE FACTOR, Is	= 1.0
WIND SPEED	= 90 MPH
WIND IMPORTANCE FACTOR, Iw	= 1.0
WIND EXPOSURE	= B

DESIGN LOADS:

ROOF SNOW LOAD	= 33 PSF
ROOF DEAD LOAD	= 20 PSF
FLOOR LIVE LOAD	= 50 PSF

FOOTING SCHEDULE

	WIDTH	LENGTH	DEPTH	CROSSWISE REINFORCING				LENGTHWISE REINFORCING				REMARKS
				NO.	SIZE	LENGTH	SPACING	NO.	SIZE	LENGTH	SPACING	
FC15	1'-6"	CONT.	1'-0"					2	#4	CONT.	EQ.	
FS2.5	2'-5"	2'-5"	1'-0"	4	#4	2'-0"	EQ.	4	#4	2'-0"	EQ.	
FS3.0	3'-0"	3'-0"	1'-0"	5	#4	2'-6"	EQ.	5	#4	2'-6"	EQ.	

NOTES:
1. ALLOWABLE SOIL BEARING PRESSURE = 1500 psf.
2. ALL CONCRETE WORK MUST MEET THE REQUIREMENTS OF THE 2009 IBC, ACI 318 AND LOCAL ORDINANCES.
3. ALL BARS MUST BE 3" CLEAR FROM GRADE.
4. ELEVATIONS ARE BASED ON A FLOOR ELEVATION OF 100'-0".

POST-INSTALLED ANCHORS

1. PRODUCT: Epoxy Anchors
   A. Epoxy for Concrete connections shall be:
      1. HIT RE 500-SD (ICC-ESR-2322) by Hilti Corporation
      2. HIT½HY 150 MAX-SD (ICC-ESR-3013) by Hilti Corporation
      3. Powers PE1000 + (ICC-ESR-2583) by Powers Fasteners Inc
      4. SET-XP (ICC-ESR-2508) by Simpson Strong Tie.
      5. Alternative epoxies may be used if an ICC-ESR approval for use in cracked concrete is submitted to the structural engineer prior to use.
   B. Epoxy for Masonry Connections shall be:
      1. HIT RE 500 (ICC-ESR-1682) by Hilti Corporation (grout filled masonry applications)
      2. HIT HY 150 MAX (ICC-ESR-1967) by Hilti Corporation (grout filled masonry applications)
      3. HIT HY 20 (ICC-ESR-2659) by Hilti Corporation (hollow masonry applications only)
      4. SET (ICC-ESR-1772) by Simpson Strong
   C. Follow all of the manufacturer's recommendations and ICC-ESR for epoxy installation.
2. PRODUCT: Mechanical Anchors
   A. Mechanical Anchors for Concrete connections shall be:
      1. Kwik Bolt TZ (ICC-ESR-1917) by Hilti Corporation
      2. Strong-Bolt (ICC-ESR-1771) by Simpson Strong Tie Inc.
      3. Power-Stud+ SD1 (ICC-ESR-2818) by Powers Fasteners Inc.
      4. Alternative mechanical anchors may be used if an ICC-ESR approval for use in cracked concrete is submitted to the structural engineer prior to use.
   B. Mechanical Anchors for Masonry Connections shall be:
      1. Kwik Bolt 3 (ICC-ESR-1385) by Hilti corporation (grout filled masonry applications)
      2. Wedge-All (ICC-ESR-1396) by Simpson Strong Tie Inc. (grout filled masonry applications)
      3. Power-Stud+SD1 (ICC-ESR-2966) by powers Fasteners Inc. (grout filled masonry applications)
   C. Follow all of the manufacturer's recommendations and ICC-ESR for mechanical anchor installation.
3. PRODUCT: Screw Anchors
   A. Screw Anchors for Concrete and grout filled Masonry connections shall be:
      1. Titen HD (ICC-ESR-2713) by Simpson Strong Tie Inc.
      2. Wedge-Bolt by Powers Fasteners Inc.
      3. Alternative screw anchors may be used if an ICC-ESR approval for use in cracked concrete is submitted to the structural engineer prior to use.
   B. Follow all of the manufacturer's recommendations and ICC-ESR for screw anchor installation.

EMBEDMENT OF ADHESIVE ANCHORS

BASE MATERIAL	REBAR DOWELS	THREADED ROD ø	EMBEDMENT LENGTH	SCREEN LENGTH
CONCRETE	#3	3/8"	5"	–
	#4	1/2"	6"	–
	#5	5/8"	8"	–
	#6	3/4"	10"	–
	#7	7/8"	12"	–
CMU (GROUTED)	#3	3/8"	4"	–
	#4	1/2"	5"	–
	#5	5/8"	6"	–
	#6	3/4"	7"	–
CMU (HOLLOW)	#3	3/8"	–	4"
	#4	1/2"	–	5"
	#5	5/8"	–	6"
	#6	3/4"	–	7"

1. INSTALLATION SHALL BE IN ACCORDANCE WITH THE MANUFACTURER'S RECOMMENDATIONS AND SPECIFICATIONS.
2. EMBEDMENT LENGTH IS INTO STRUCTURE AND NOT VENEER, UNO.
3. REBAR SHALL BE DEFORMED.
4. MINIMUM WALL THICKNESS TO BE EMBEDMENT LENGTH PLUS 1-1/2" OTHERWISE SEE STRUCTURAL ENGINEER.

DIVISION OF FACILITIES CONSTRUCTION AND MANAGEMENT
REVIEWED FOR CODE COMPLIANCE
SIGNATURE: FC
DATE: 4-23-13

HFSArchitects
ARCHITECTURE
INTERIORS
PLANNING
1484 South State Street
Salt Lake City, Utah 84115
801-596-0691/F: 596-0693
www.hfsa.com

CONSULTANT

Structural Engineering inc.
442 North Main Street, Suite 200
Bountiful, Utah 84010
e-mail: wca@wcaeng.com
(801) 298-1118, Office 298-1122 Fax

PROFESSIONAL STRUCTURAL ENGINEER
18 April 2013
No.189660
CLIFF R. COLE
STATE OF UTAH
Exp. 3/31/2015

MOUNTAINLAND APPLIED TECHNOLOGY COLLEGE PHASE TWO

GENEVA BUILDING REMODEL
1410 BUSINESS PARK DRIVE
OREM, UTAH 84058

MARK	DATE	DESCRIPTION

DATE:	18 April 2013
AGENCY PROJECT NO:	09163260
HFSA PROJECT NO:	1204.01
CAD DWG FILE NO:	
DRAWN BY:	
CHECKED BY:	CRC
DESIGNED BY:	CL
DWG TYPE:	
ARCHITECTURAL PHASE:	

SHEET TITLE

GENERAL STRUCTURAL NOTES

SHEET **S0.1** OF

STATEMENT OF SPECIAL INSPECTIONS

1. The inspection requirements as noted on this sheet are required for the items that are specifically noted, designed and detailed in the structural documents. Refer to the current IBC, Chapter 17, the architectural drawings, and the geotechnical report for additional information and additional inspection requirements for non-structural items.

2. The project owner shall employ one or more special inspectors to provide inspections during construction on the types of work listed below. The special inspector shall be a qualified person who shall demonstrate competence, to the satisfaction of the building official and/or EOR, for inspection of the particular type of construction or operation requiring special inspection. These inspections are in addition to the inspections required by the building department of the local jurisdiction.

3. Special inspectors shall keep records of inspections. The special inspector shall furnish inspection reports to the building official and to the EOR in responsible charge. Reports shall indicate that work inspected was done in conformance with approved construction documents. Discrepancies shall be brought to the immediate attention of the contractor for correction. If the discrepancies are not corrected, the discrepancies shall be brought to the attention of the building official and to the EOR in responsible charge prior to the completion of that phase of the work. A final report documenting required special inspections and correction of any discrepancies noted in the inspections shall be submitted at a point in time agreed upon by the permit applicant and the building official prior to the start of work.

4. Special inspections for each task shall be carried out in compliance with requirements per the current IBC and other material standards.

5. FABRICATION SHOP REQUIREMENTS
   A. Where fabrication of structural load bearing members and assemblies are being performed on the premises of a fabricators shop, special inspections required shall be provided in the shop during the fabrication process. This requirement may be excepted if the work is done on the premises of a fabricator registered and approved to perform such work without special inspection. A certificate shall be required to verify such approval. At completion of the fabrication, the approved fabricator shall submit a certificate of compliance to the building official stating that the work was performed in accordance with the approved construction drawings

6. TESTING: The owner will provide testing by qualified testing personnel for the following types of construction:

Bolting:	installation and correct torque and/or tension.
Concrete:	strength, slump, air, and temperature. (see Concrete Notes 3(E) on G5N for concrete items that require testing)
Soils:	compaction.
Welding:	type, size, length, and quality of shop and all field welds by approved methods. Ultrasonically test complete penetration welds.

Drill and epoxy anchors: load test 10% of anchors, with a minimum of (2) anchors tested

7. THE CONTRACTOR SHALL:

A. Coordinate testing. DO NOT proceed with subsequent work until inspections and testing has been approved.
B. Copy inspection reports/testing results to the Arch/EOR and owner before work proceeds.
C. Correct deficient work at no additional cost to the owner.

STRUCTURAL OBSERVATIONS

1. UCA Structural Engineering, Inc. shall be notified by the contractor 5 business days before the completion of the items listed in this section so that structural observations may be performed in accordance with IBC Section 1709. The observations will be performed at the discretion of UCA Structural Engineering, Inc.

   A. Structural observations by UCA Structural Engineering, Inc. are not required for this project.

CONCRETE CONSTRUCTION INSPECTIONS				
ITEM NO.	ITEM FOR VERIFICATION & INSPECTION	INSPECTION FREQUENCY		ITEMS REQUIRED FOR THIS PROJECT
		CONTINUOUS	PERIODIC	
1	Inspection of reinforcing steel, including prestressing tendons, and placement	–	X	YES
2	Inspection of reinforcing steel welding in accordance with IBC Table 1704.3, Item 5b	–	–	YES
3	Inspection of bolts to be installed in concrete prior to and during placement of concrete	X	–	YES
4	Inspection of anchors installed in hardened concrete	–	X	YES
5	Verifying use of required design mix	–	X	YES
6	At the time fresh concrete is sampled to fabricate specimens for strength tests, perform slump and air content tests, and determine the temperature of the concrete	X	–	YES
7	Inspection of concrete and shotcrete placement for proper application techniques	X	–	YES
8	Inspection for maintenance of specified curing temperature and techniques	–	X	YES
9	Inspection of prestressed concrete: a) Application of prestressing forces b) Grouting of bonded prestressing tendons in the seismic-force-resisting system	X	–	NO
10	Erection of precast concrete members	–	X	NO
11	Verification of in-situ concrete strength, prior to stressing of tendons in posttensioned concrete and prior to removal of shores and forms from beams and structural slabs	–	X	NO
12	Inspection formwork for shape, location and dimensions of the concrete member being formed	–	X	YES

WOOD CONSTRUCTION INSPECTIONS				
ITEM NO.	ITEM FOR VERIFICATION & INSPECTION	INSPECTION FREQUENCY		ITEMS REQUIRED FOR THIS PROJECT
		CONTINUOUS	PERIODIC	
1	During field gluing operations of elements of the wind-force-resisting or seismic-force-resisting system (see note 2)	X	–	YES
2	For nailing, bolting, anchoring and other fastening of components within the wind-force-resisting or seismic-force-resisting-system, including wood shear walls, wood diaphragms, drag struts, braces, shear panels and holdowns (see note 2)	–	X	YES
3	High-load diaphragms as per IBC Section 1704.6.1	–	X	NO
4	Where a truss clear span in 60ft or greater, the special inspector shall verify that the temporary installation restraint/bracing and the permanent individual truss member restraint/bracing are installed in accordance with the approved truss submittal package	–	X	NO

Note:
1. Special inspections of the fabrication process of prefabricated wood structural elements and assemblies shall be in accordance with IBC Section 1704.2
2. Inspections are not required for shear walls, shear panels and diaphragms, including nailing, bolting, anchoring and other fastening to other components where the fastener spacing of the sheathing is more than 4" o.c.

STEEL CONSTRUCTION INSPECTIONS				
ITEM NO.	ITEM FOR VERIFICATION & INSPECTION	INSPECTION FREQUENCY		ITEMS REQUIRED FOR THIS PROJECT
		CONTINUOUS	PERIODIC	
1	MATERIAL VERIFICATION OF HIGH-STRENGTH BOLTS, NUTS AND WASHERS:			
1a	Identification markings to conform to ASTM standards specified in the approved construction documents	–	X	YES
1b	Manufacturer's certificate of compliance required	–	X	YES
2	INSPECTION OF HIGH-STRENGTH BOLTING:			
2a	Snug-tight joints	–	X	NO
2b	Pretensioned and slip-critical joints using turn-of-nut with matchmarking, twist-off bolt or direct tension indicator methods of installation	–	X	NO
2c	Pretensioned and slip-critical joints using turn-of-nut without matchmarking or calibrated wrench methods of installation	X	–	YES
3	MATERIAL VERIFICATION OF STRUCTURAL STEEL AND COLD-FORMED STEEL DECK:			
3a	For structural steel, identification of markings to conform to AISC 360	–	X	YES
3b	For other steel, identification markings to conform to ASTM standards specified in the approved construction documents	–	X	YES
3c	Manufacturer's certified test reports	–	X	YES
4	MATERIAL VERIFICATION OF WELD FILLER MATERIALS:			
4a	Identification markings to conform to AWS specification in the approved construction documents	–	X	YES
4b	Manufacturer's certificate of compliance required	–	X	YES
5	Inspection of welding:			
5a	Structural steel and cold-formed steel deck			
	1) Complete and partial joint penetration grove welds	X	–	NO
	2) Multipass fillet welds	X	–	NO
	3) Single-pass fillet welds > 5/16"	X	–	NO
	4) Plug and slot welds	X	–	NO
	5) Single-pass fillet welds ≤ 5/16"	–	X	YES
	6) Floor and roof deck welds	–	X	NO
5b	Reinforcing steel:			
	1) Verification of weldability of reinforcing steel other than ASTM A706	–	X	NO
	2) Reinforcing steel resisting flexural and axial forces in intermediate and special moment frames, and boundary elements of special structural walls of concrete and shear reinforcement	X	–	NO
	3) Shear reinforcing steel	X	–	NO
	4) Other reinforcing steel	–	X	NO
6	Inspection of steel frame joint details for compliance:			
6a	Details such as bracing and stiffening	–	X	NO
6b	Member locations	–	X	NO
6c	Application of joint details at each connection	–	X	NO

DIVISION OF FACILITIES CONSTRUCTION AND MANAGEMENT
REVIEWED FOR CODE COMPLIANCE
SIGNATURE: FC
DATE: 4-23-13

HFSArchitects
ARCHITECTURE
INTERIORS
PLANNING

1484 South State Street
Salt Lake City, Utah 84115
801-596-0691/F: 596-0693
www.hfsa.com

CONSULTANT

Structural Engineering inc.
442 North Main Street, Suite 200
Bountiful, Utah 84010
e-mail: wca@wcaeng.com
(801) 298-1118, Office 298-1122 Fax

STRUCTURAL PROFESSIONAL ENGINEER
18 April 2013
No.189660
CLIFF R. COLE
STATE OF UTAH
Exp. 3/31/2015

MOUNTAINLAND APPLIED TECHNOLOGY COLLEGE PHASE TWO

GENEVA BUILDING REMODEL
1410 BUSINESS PARK DRIVE
OREM, UTAH 84058

MARK	DATE	DESCRIPTION

DATE:	18 April 2013
AGENCY PROJECT NO:	09163260
HFSA PROJECT NO:	1204.01
CAD DWG FILE NO:	
DRAWN BY:	
CHECKED BY:	CRC
DESIGNED BY:	CL
DWG TYPE:	
ARCHITECTURAL PHASE:	

SHEET TITLE

GENERAL STRUCTURAL NOTES

SHEET **S0.2** OF

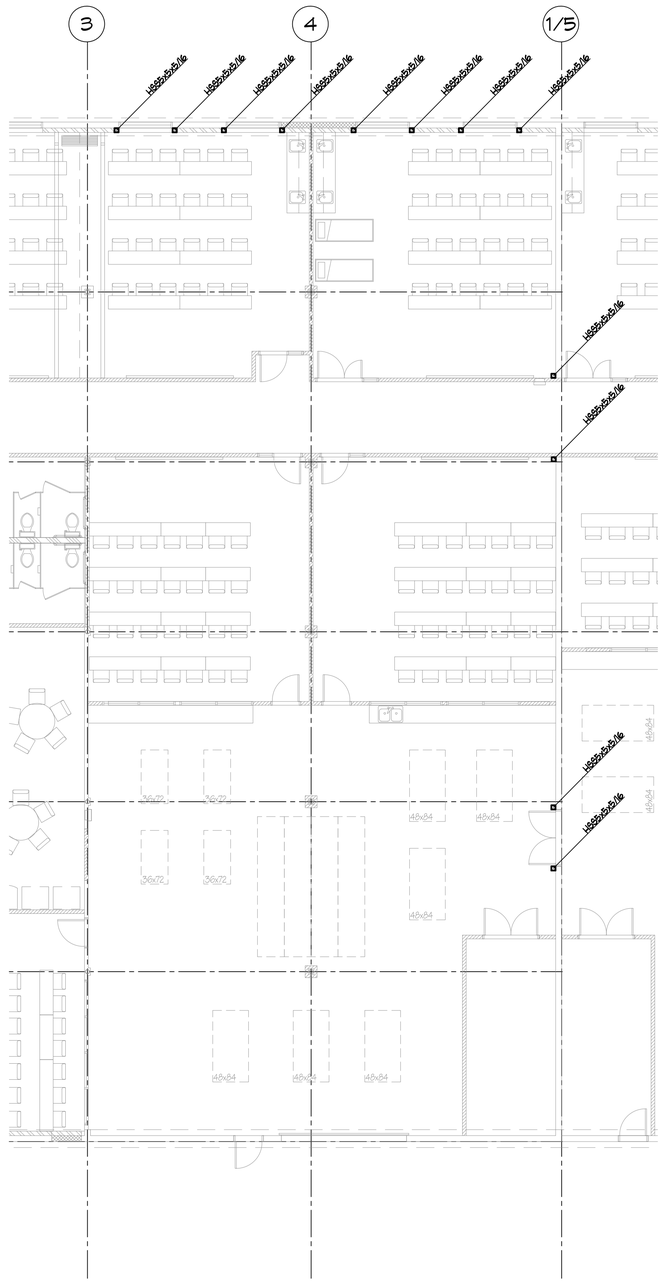

FOOTING AND FOUNDATION PLAN

SCALE: 1/8" = 1'-0"

DIVISION OF FACILITIES CONSTRUCTION AND MANAGEMENT
REVIEWED FOR CODE COMPLIANCE
SIGNATURE: FC
DATE: 4-23-13

HFSArchitects

ARCHITECTURE
INTERIORS
PLANNING

1484 South State Street
Salt Lake City, Utah 84115
801-596-0691/F: 596-0693
www.hfsa.com

CONSULTANT

WCA
Structural Engineering inc.
442 North Main Street, Suite 200
Bountiful, Utah 84010
e-mail: wca@wcaeng.com
(801) 298-1118, Office 298-1122 Fax

PROFESSIONAL STRUCTURAL ENGINEER
18 April 2013
No.189660
CLIFF R. COLE
STATE OF UTAH
Exp. 3/31/2015

MOUNTAINLAND APPLIED TECHNOLOGY COLLEGE PHASE TWO

GENEVA BUILDING REMODEL
1410 BUSINESS PARK DRIVE
OREM, UTAH 84058

MARK	DATE	DESCRIPTION

DATE:	18 April 2013
AGENCY PROJECT NO:	09163260
HFSA PROJECT NO:	1204.01
CAD DWG FILE NO:	
DRAWN BY:	
CHECKED BY:	CRC
DESIGNED BY:	CL
DWG TYPE:	
ARCHITECTURAL PHASE:	

SHEET TITLE

FOOTING & FOUNDATION PLAN

SHEET **S1.1** OF

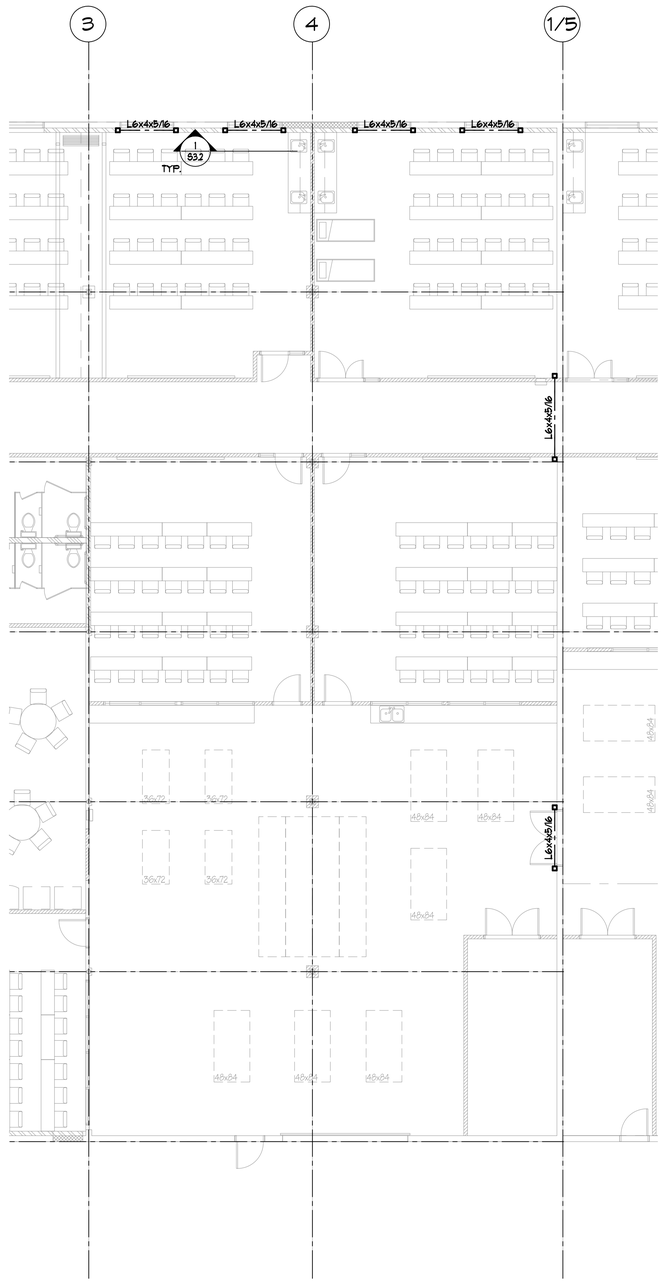

FLOOR FRAMING PLAN

SCALE: 1/8" = 1'-0"

DIVISION OF FACILITIES CONSTRUCTION AND MANAGEMENT
REVIEWED FOR CODE COMPLIANCE
SIGNATURE: FC
DATE: 4-23-13

HFSArchitects

ARCHITECTURE
INTERIORS
PLANNING

1484 South State Street
Salt Lake City, Utah 84115
801-596-0691/F: 596-0693
www.hfsa.com

CONSULTANT

WCA
Structural Engineering inc.
442 North Main Street, Suite 200
Bountiful, Utah 84010
e-mail: wca@wcaeng.com
(801) 298-1118, Office 298-1122 Fax

PROFESSIONAL STRUCTURAL ENGINEER
18 April 2013
No.189660
CLIFF R. COLE
STATE OF UTAH
Exp. 3/31/2015

MOUNTAINLAND APPLIED TECHNOLOGY COLLEGE PHASE TWO

GENEVA BUILDING REMODEL
1410 BUSINESS PARK DRIVE
OREM, UTAH 84058

MARK	DATE	DESCRIPTION

DATE:	18 April 2013
AGENCY PROJECT NO:	09163260
HFSA PROJECT NO:	1204.01
CAD DWG FILE NO:	
DRAWN BY:	
CHECKED BY:	CRC
DESIGNED BY:	CL
DWG TYPE:	
ARCHITECTURAL PHASE:	

SHEET TITLE

FLOOR FRAMING PLAN

S2.1

SHEET OF

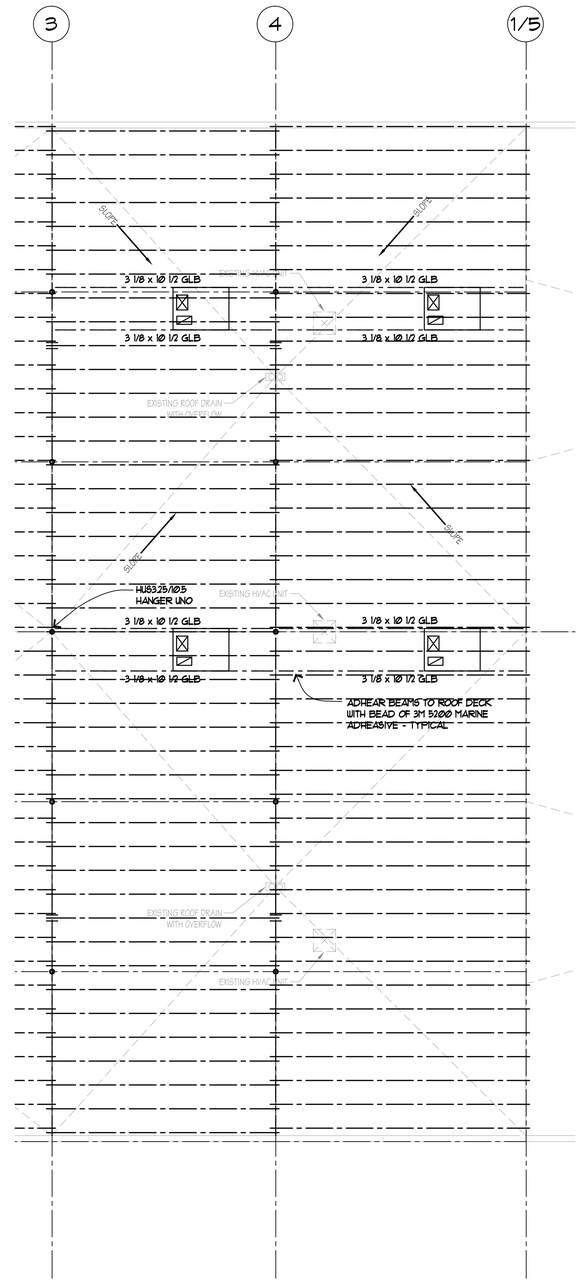

ROOF FRAMING PLAN

SCALE: 1/8" = 1'-0"

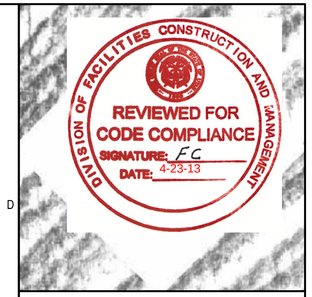

HFSArchitects

ARCHITECTURE
INTERIORS
PLANNING

1484 South State Street
Salt Lake City, Utah 84115
801-596-0691/F: 596-0693
www.hfsa.com

CONSULTANT

WCA
Structural Engineering inc.
442 North Main Street, Suite 200
Bountiful, Utah 84010
e-mail: wca@wcaeng.com
(801) 298-1118, Office 298-1122 Fax

PROFESSIONAL STRUCTURAL ENGINEER
18 April 2013
No. 189660
CLIFF R. COLE
STATE OF UTAH
Exp. 3/31/2015

MOUNTAINLAND APPLIED TECHNOLOGY COLLEGE PHASE TWO

GENEVA BUILDING REMODEL
1410 BUSINESS PARK DRIVE
OREM, UTAH 84058

MARK	DATE	DESCRIPTION

DATE:	18 April 2013
AGENCY PROJECT NO:	09163260
HFSA PROJECT NO:	1204.01
CAD DWG FILE NO:	
DRAWN BY:	
CHECKED BY:	CRC
DESIGNED BY:	CL
DWG TYPE:	
ARCHITECTURAL PHASE:	

SHEET TITLE

ROOF FRAMING PLAN

SHEET **S2.2** OF

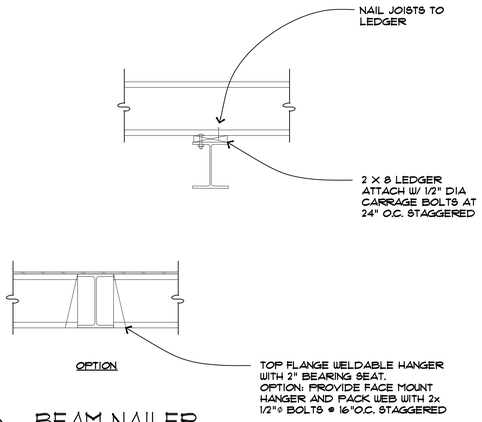

7 / S3.1 BEAM NAILER

FDN-26 SCALE: N.T.S.

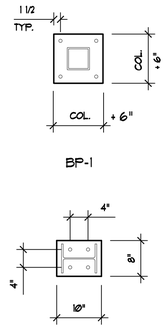

ALL BOLTS INTO CONC. AT COLS. MAY BE SIMPSON TITEN OR POWERS WEDGE BOLTS

BASE PLATE NOTES

1. U.N.O. ALL COLUMNS SHALL BE INSTALLED WITH 3/4" DIA. ANCHOR BOLTS W/ 3" MIN HOOKS. PROJECT BOLTS 3" MIN. ABOVE THE TOP OF THE BASE PLATE. EMBEDMENT SHALL BE 9" MIN. ALL BOLTS SHALL BE INSTALLED WITH HARDEND WASHERS BENEATH THE NUT.

2. ANCHOR BOLTS SHALL NOT BE WELDED (INCLUDING TACK WELDS).

3. U.N.O. BASE PLATE THICKNESS TO BE 3/4" THICK. STAIR BASE PLATES TO BE 9x9 TYP. AT BEARING WALL (GRID 2) USE 6x9 PLATES

1 / S3.1 BASE PLATES

FDN-26 SCALE: N.T.S.

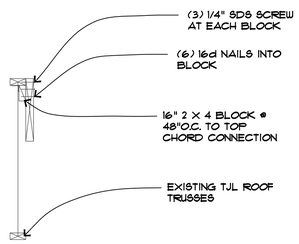

8 / S3.1 TJL SUPPORT

FDN-26 SCALE: N.T.S.

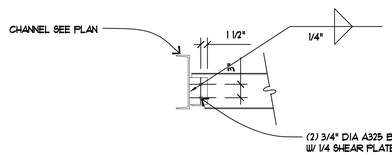

5 / S3.1 CHANNEL CONNECTION

SCALE: 3/4" = 1'-0"

STAIR COLS. MAY BEAR ON EXISTING SLAB WITH OUT SPOT FOOTINGS

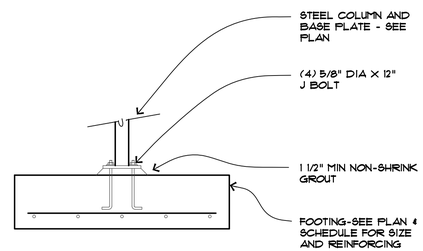

2 / S3.1 COLUMN ANCHORAGE

SCALE: 3/4" = 1'-0"

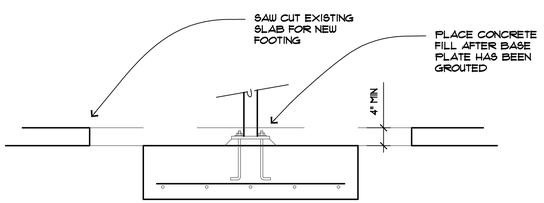

9 / S3.1 COLUMN ANCHORAGE

SCALE: 3/4" = 1'-0"

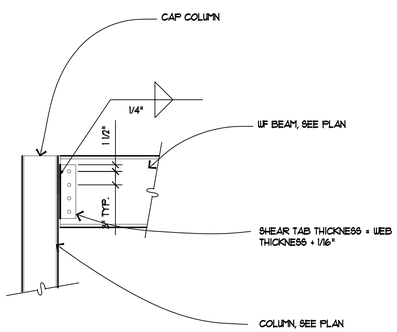

6 / S3.1 COL / BM CONNECTION

SCALE: 3/4" = 1'-0"

DIVISION OF FACILITIES CONSTRUCTION AND MANAGEMENT
REVIEWED FOR CODE COMPLIANCE
SIGNATURE: FC
DATE: 4-23-13

HFSArchitects
ARCHITECTURE
INTERIORS
PLANNING
1484 South State Street
Salt Lake City, Utah 84115
801-596-0691/F: 596-0693
www.hfsa.com

CONSULTANT

WCA Structural Engineering inc.
442 North Main Street, Suite 200
Bountiful, Utah 84010
e-mail: wca@wcaeng.com
(801) 298-1118, Office 298-1122 Fax

STRUCTURAL ENGINEER — PROFESSIONAL — STATE OF UTAH
18 April 2013
No.189660
CLIFF R. COLE
Exp. 3/31/2015

MOUNTAINLAND APPLIED TECHNOLOGY COLLEGE PHASE TWO

GENEVA BUILDING REMODEL
1410 BUSINESS PARK DRIVE
OREM, UTAH 84058

MARK	DATE	DESCRIPTION

DATE:	18 April 2013
AGENCY PROJECT NO:	09163260
HFSA PROJECT NO:	1204.01
CAD DWG FILE NO:	
DRAWN BY:	
CHECKED BY:	CRC
DESIGNED BY:	CL
DWG TYPE:	
ARCHITECTURAL PHASE:	

SHEET TITLE

DETAILS

SHEET **S3.1** OF

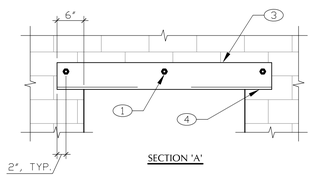

SECTION 'A'

KEYNOTES:

1. 3/4"Ø DRILL & EPOXY BOLTS @ 24" O.C., SEE DETAIL 2/6ISØ. (USE OF IMPACT EQUIPMENT IS NOT ALLOWED)
2. SAW CUT OPENING AS REQ'D, DRY PACK MASONRY FLUSH W/ ANGLE
3. STEEL ANGLE (LLV), SEE PLAN
4. SAW CUT OPENING AS REQ'D, FOR FULL BEARING

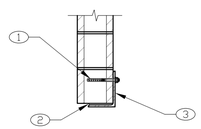

2 / S3.2 LINTEL DETAIL

SCALE: 3/4" = 1'-Ø"

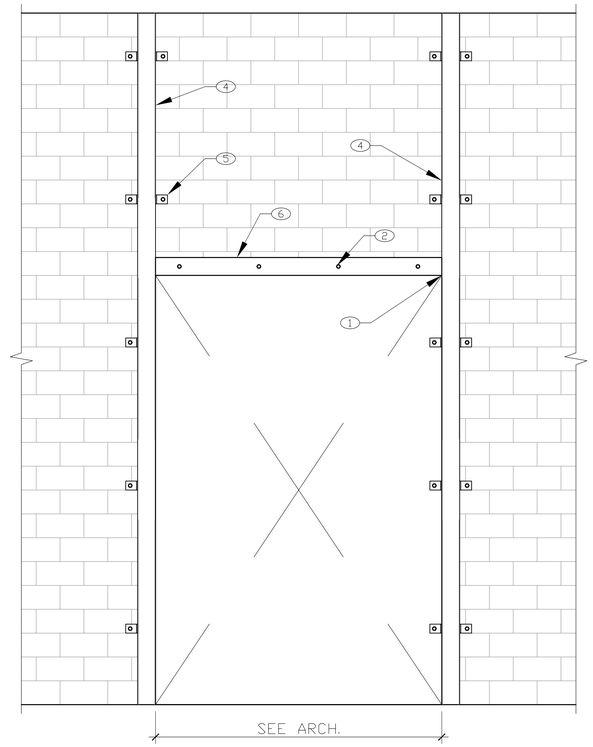

1 / S3.2 LINTEL DETAIL

SCALE: 3/4" = 1'-Ø"

KEYNOTES:

1. EXTEND "L" TO TUBE. WELD INSIDE ANGLE TO TUBE W/ 1/4" FILLET TO TUBE
2. 3/4"Ø DRILL & EPOXY ANCHORS @ 24" O.C. (IF CELLS ARE UNGROUTED, PLACE ANCHOR IN SCREEN TUBES)
3. PAINT (WEATHER PROOFING)
4. HSS COLUMN, SEE PLAN, COLUMN MAYBE OFFSET FROM THE SIDE OF THE SAWCUT OPENING BY 8" MAX.
5. L4x3x1/4" by 3" LONG CLIP WITH 3/4"Ø DRILL & EPOXY ANCHOR @ 48" O.C., AS SHOWN (IF CELLS ARE UNGROUTED, PLACE ANCHOR IN SCREEN TUBES)
6. STEEL ANGLE (LLV), SEE PLAN

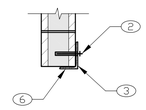

VIEW '2'

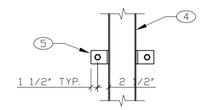

VIEW '3'

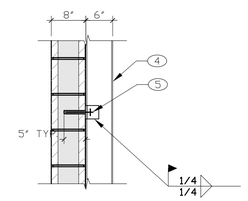

VIEW '4'

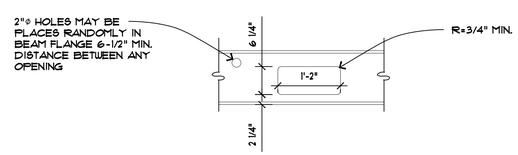

3 / S3.2 DUCT OPENING CUTS

SCALE: 3/4" = 1'-Ø"

DIVISION OF FACILITIES CONSTRUCTION AND MANAGEMENT
REVIEWED FOR CODE COMPLIANCE
SIGNATURE: FC
DATE: 4-23-13

HFSArchitects
ARCHITECTURE
INTERIORS
PLANNING
1484 South State Street
Salt Lake City, Utah 84115
801-596-0691/F: 596-0693
www.hfsa.com

CONSULTANT

Structural Engineering inc.
442 North Main Street, Suite 200
Bountiful, Utah 84010
e-mail: wca@wcaeng.com
(801) 298-1118, Office 298-1122 Fax

STRUCTURAL ENGINEER
PROFESSIONAL
18 April 2013
No.189660
CLIFF R. COLE
STATE OF UTAH
Exp. 3/31/2015

MOUNTAINLAND APPLIED TECHNOLOGY COLLEGE PHASE TWO

GENEVA BUILDING REMODEL
1410 BUSINESS PARK DRIVE
OREM, UTAH 84058

MARK	DATE	DESCRIPTION

DATE:	18 April 2013
AGENCY PROJECT NO:	09163260
HFSA PROJECT NO:	1204.01
CAD DWG FILE NO:	
DRAWN BY:	
CHECKED BY:	CRC
DESIGNED BY:	CL
DWG TYPE:	
ARCHITECTURAL PHASE:	

SHEET TITLE

DETAILS

SHEET **S3.2** OF

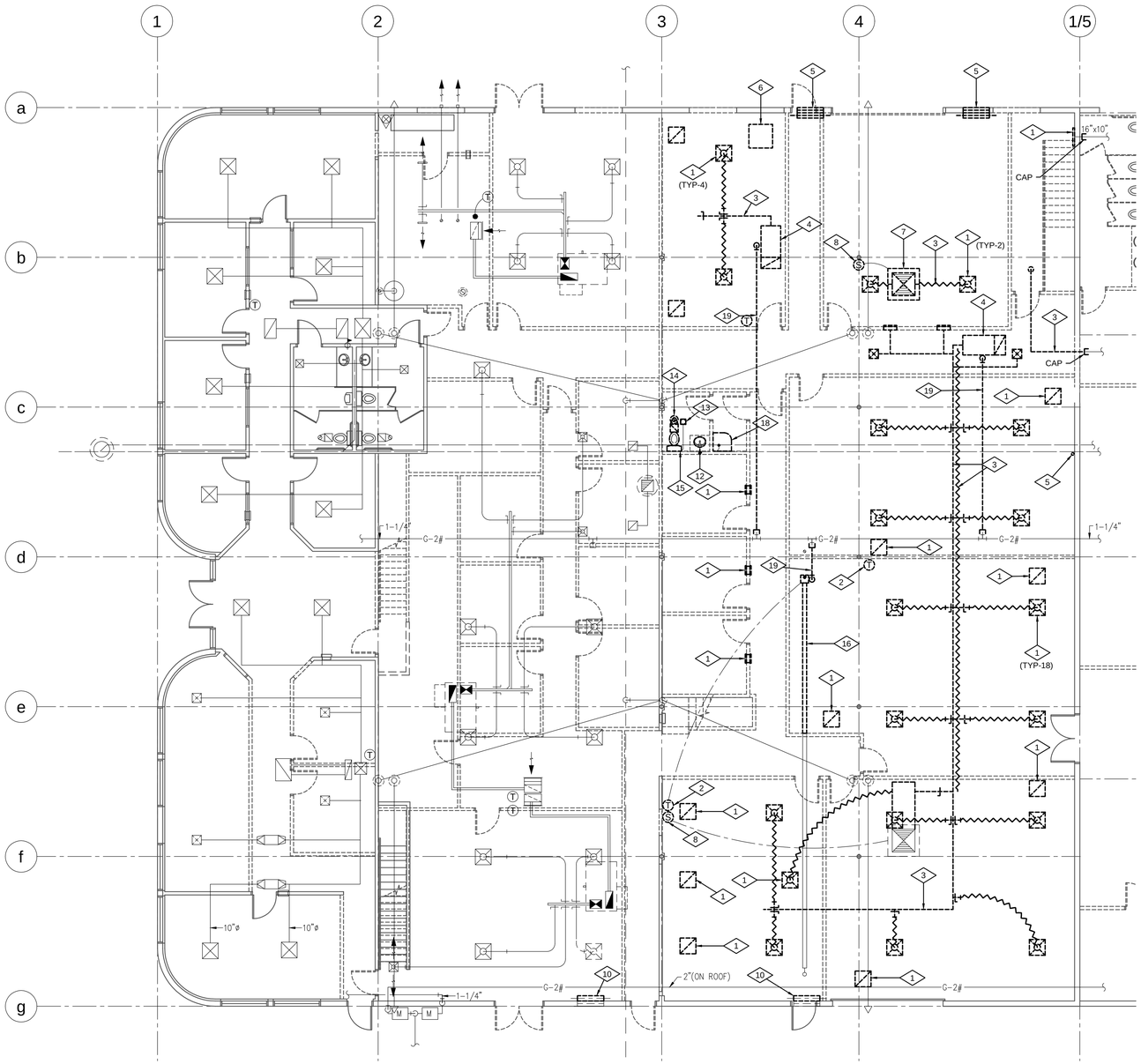

MECHANICAL DEMOLITION PLAN - AREA A

SCALE: 1/8" = 1'-0" 1ST FLOOR

N

REFERENCE NOTES

1. REMOVE DIFFUSER, REGISTER, OR GRILLE.
2. REMOVE THERMOSTAT.
3. REMOVE DUCTWORK.
4. REMOVE FURNACE.
5. REMOVE VENT PIPE.
6. REMOVE CONDENSING UNIT FROM ROOF.
7. REMOVE EVAPORATIVE COOLER FROM ROOF.
8. REMOVE EVAPORATIVE COOLER STARTER AND CONTROLS.
9. REMOVE RADIANT TUBE HEATER.
10. REMOVE GRAVITY DAMPER.
11. NOT USED.
12. REMOVE LAVATORY.
13. REMOVE FLOOR DRAIN.
14. REMOVE CEILING EXHAUST FAN.
15. REMOVE WATER CLOSET.
16. NOT USED.
17. NOT USED.
18. REMOVE SERVICE SINK.
19. REMOVE GAS PIPING. FIELD VERIFY EXACT LOCATION.

GENERAL DEMOLITION NOTES

A. ITEMS TO REMOVED SHALL BE DISPOSED OF PROPERLY UNLESS OTHERWISE NOTED.

B. THE BUILDING OWNER SHALL HAVE FIRST RIGHT OF REFUSAL FOR ANY EQUIPMENT OR MATERIALS TO BE DEMOLISHED.

C. REMOVAL OF ANY PIECE OF EQUIPMENT SHALL BE INTERPRETED AS COMPLETE REMOVAL OF ALL ASSOCIATED PIPING BACK TO THE MAIN(S), DUCTWORK BACK TO MAIN(S), CONTROLS, CONTROL WIRING BACK TO PANEL, ELECTRICAL WIRING BACK TO PANEL, AND CONDUIT TO BEHIND NEAREST AREA OUT OF SIGHT.

D. DEVICES REMOVED FROM SYSTEMS TO REMAIN IN OPERATION SHALL BE PLUGGED OR CAPPED TO MAINTAIN SYSTEM OPERATION.

E. WASTE PIPING LEFT FROM ITEMS REMOVED SHALL BE CUT OFF TO FLOOR ELEVATION AND FILLED WITH 6" OF CONCRETE.

F. HOLES, DEPRESSIONS, AND OTHER VOIDS MADE BY THE REMOVAL OF ITEMS SHALL BE REPAIRED. ANY DEMOLISHED ITEMS LEAVING DUCTWORK, CURBS, AND PIPING PENETRATIONS THRU THE ROOF SHALL HAVE ALL ITEMS EXTENDING THRU THE ROOF REMOVED AND THE ROOF REPAIRED.

DIVISION OF FACILITIES CONSTRUCTION AND MANAGEMENT
REVIEWED FOR CODE COMPLIANCE
SIGNATURE: FC
DATE: 4-23-13

HFS Architects
ARCHITECTURE
INTERIORS
PLANNING
1484 South State Street Salt Lake City, Utah 84115
801-596-0691/F: 596-0693
www.hfsa.com

CONSULTANT

OLSEN & PETERSON
consulting engineers, inc.
14 East 2700 South, Salt Lake City, UT 84115
Phone: (801) 486-4646 Fax: (801) 467-2531

LICENSED PROFESSIONAL ENGINEER # 183628 JEFFREY M. SEARE 4/19/13 STATE OF UTAH

MOUNTANLAND APPLIED TECHNOLOGY COLLEGE PHASE TWO

GENEVA BUILDING REMODEL
1410 BUSINESS PARK DRIVE
OREM, UTAH 84058

MARK	DATE	DESCRIPTION

DATE:	APRIL 19, 2013
AGENCY PROJECT NO:	09163260
HFSA PROJECT NO:	1204.01
CAD DWG FILE NO:	
DRAWN BY:	STAFF
CHECKED BY:	JMS
DESIGNED BY:	JAB
DWG TYPE:	
ARCHITECTURAL PHASE:	CONSTRUCTION BID DOCUMENTS

SHEET TITLE

MECHANICAL DEMOLITION PLAN

MD-101A

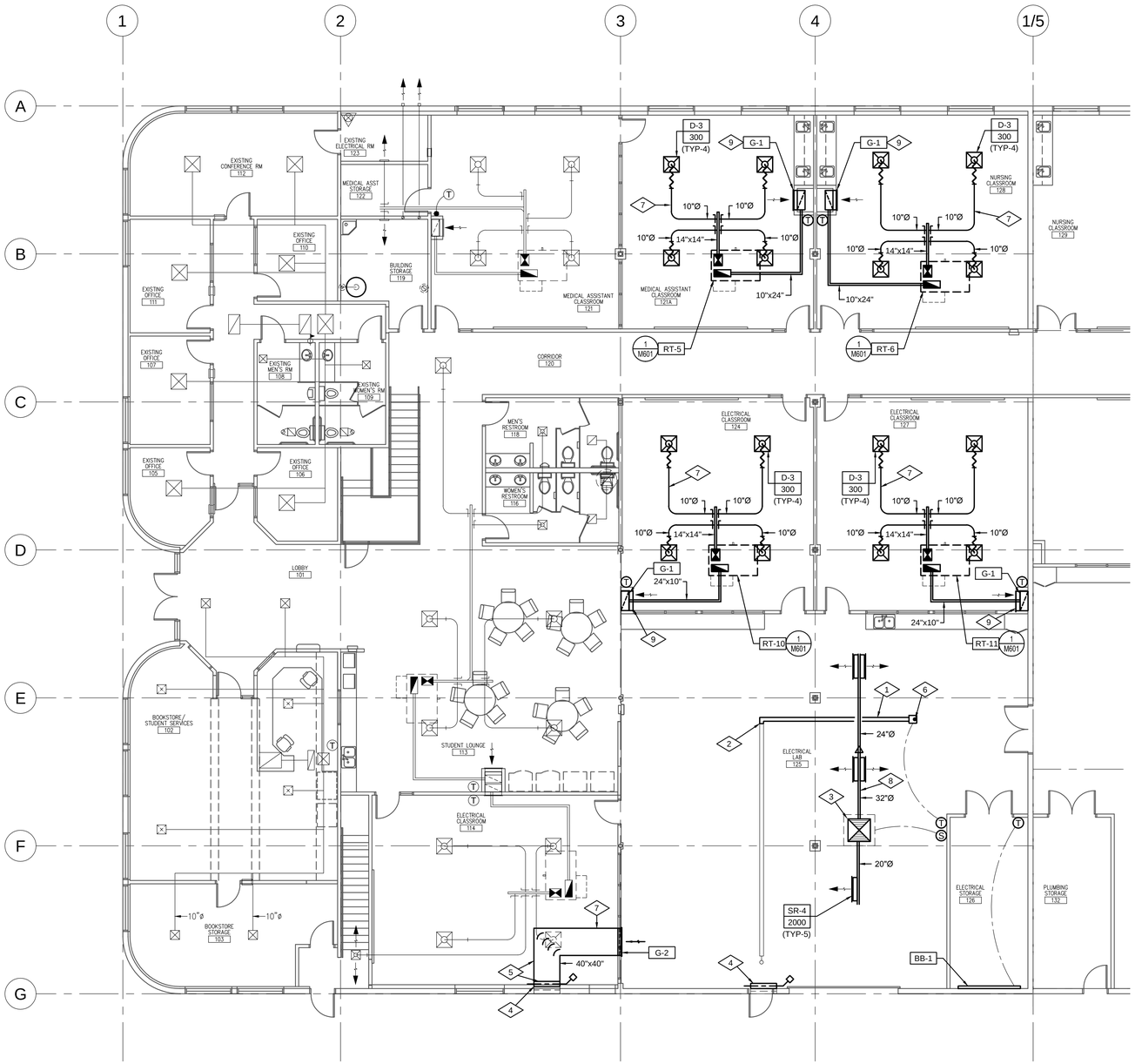

REFERENCE NOTES

1. RELOCATE AND INSTALL EXISTING RADIANT TUBE HEATER BURNER SECTION, TUBING, AND TEMPERATURE SENSOR.
2. CONNECT EXISTING RADIANT TUBE HEATER TO RE-LOCATED RADIANT TUBE HEATER.
3. CONNECT NEW DUCTWORK TO EXISTING EVAPORATIVE COOLER. FIELD VERIFY EXACT SIZE FOR TRANSITION. PROVIDE NEW AUTOMATIC DAMPER AND ACTUATOR IN NECK OF COOLER.
4. PROVIDE MOTORIZED AUTOMATIC DAMPER. INTERLOCK WITH EVAPORATIVE COOLER IN AREA.
5. RELIEF AIR DUCT AND DAMPER (ABOVE CEILING). CEILING TO BE REMOVED AND REPLACED AS NECESSARY.
6. PROVIDE FLUE THRU ROOF. SEE DETAIL 8/M601.
7. DUCTWORK TO RUN ABOVE CEILING (TYPICAL).
8. DUCTWORK TO RUN EXPOSED, IMMEDIATELY BELOW STRUCTURE. DUCT SHALL BE PAINT-LOCK GALVANIZED.
9. GRILLE SHALL BE LOCATED 18" A.F.F.

MECHANICAL PLAN - AREA A

SCALE: 1/8" = 1'-0" 1ST FLOOR

N

DIVISION OF FACILITIES CONSTRUCTION AND MANAGEMENT
REVIEWED FOR CODE COMPLIANCE
SIGNATURE: FC
DATE: 4-23-13

HFS Architects
ARCHITECTURE
INTERIORS
PLANNING
1484 South State Street Salt Lake City, Utah 84115
801-596-0691/F: 596-0693
www.hfsa.com

CONSULTANT

OLSEN & PETERSON
consulting engineers, inc.
14 East 2700 South, Salt Lake City, UT 84115
Phone: (801) 486-4646 Fax: (801) 467-2531

LICENSED PROFESSIONAL ENGINEER # 183628 JEFFREY M. SEARE 4/19/13 STATE OF UTAH

MOUNTANLAND APPLIED TECHNOLOGY COLLEGE PHASE TWO

GENEVA BUILDING REMODEL
1410 BUSINESS PARK DRIVE
OREM, UTAH 84058

MARK	DATE	DESCRIPTION

DATE:	APRIL 19, 2013
AGENCY PROJECT NO:	09163260
HFSA PROJECT NO:	1204.01
CAD DWG FILE NO:	
DRAWN BY:	STAFF
CHECKED BY:	JMS
DESIGNED BY:	JAB
DWG TYPE:	
ARCHITECTURAL PHASE:	CONSTRUCTION BID DOCUMENTS

SHEET TITLE

MECHANICAL PLAN - AREA A

M-101A

DIFFUSER SCHEDULE

SYMBOL	TYPE	NECK SIZE	LOCATION	AIR PATTERN	MAKE & MODEL
D-3 / CFM	LOUVERED	10"Ø	CEILING	4-WAY	PRICE SMD (1)(2)

15-106a

NOTES:
(1) COLOR TO BE BRIGHT WHITE.
(2) PROVIDE FRAME FOR MOUNTING IN GYP-BOARD SURFACE OR LAY-IN CEILING AND PROVIDE REMOVABLE CORE.

REGISTER & GRILLE SCHEDULE

SYMBOL	SIZE	LOCATION	TYPE	MAKE & MODEL
G-1	24" x 24"	WALL MOUNTED	LOUVERED HEAVY DUTY	PRICE 910 (1)(2)
G-2	40" x 40"	WALL MOUNTED	LOUVERED	PRICE 635 (1)(2)
SR-4 / CFM	36" x 18"	DUCT MOUNTED	LOUVERED	PRICE 620DAL (1)(3)

NOTES:
(1) COLOR TO BE BRIGHT WHITE.
(2) PROVIDE FRAME FOR MOUNTING IN GYP-BOARD SURFACE.
(3) PROVIDE OPPOSED BLADE DAMPER

MECHANICAL LEGEND

DIFFUSER

RETURN GRILLE

FLEXIBLE DUCT (MAX 5'-0")

TURNING VANES AT ALL ELBOWS

BALANCING DAMPER

DUCT RISE

DUCT DROP

POINT OF CONNECTION

WALL MOUNTED TEMPERATURE SENSOR

ROOFTOP UNIT SCHEDULE

SYMBOL	CFM	ESP	MIN O/A CFM	FLOW CONFIG	COOLING CAPACITY			HEATING CAPACITY			ELECTRICAL MCA / VOLTAGE	SIZE L"xW"xH" WEIGHT	(1)(2)(3)(4)(5) MODEL & MANUFACTURER
					TOTAL MBH	SENSIBLE MBH	EFFICIENCY	MBH INPUT	MBH OUTPUT	EFFICIENCY			
RT-5	1,050	0.8"	340	DOWN	31.5	30.4	15.0 SEER 12.5 EER	50 / 72	41 / 59	82%	20.8 @ 208/3/60	75x47x42 800 LBS	CARRIER 48HC-D04
RT-6	1,200	0.8"	350	DOWN	41.3	37.6	15.6 SEER 13.0 EER	50 / 72	41 / 59	82%	25.3 @ 208/3/60	75x47x42 800 LBS	CARRIER 48HC-D05
RT-10	1,050	0.8"	380	DOWN	31.5	30.4	15.0 SEER 12.5 EER	50 / 72	41 / 59	82%	20.8 @ 208/3/60	75x47x42 800 LBS	CARRIER 48HC-D04
RT-11	1,050	0.8"	390	DOWN	31.5	30.4	15.0 SEER 12.5 EER	50 / 72	41 / 59	82%	20.8 @ 208/3/60	75x47x42 800 LBS	CARRIER 48HC-D04

15-109

NOTES:
(1) COOLING CAPACITY TO BE BASED ON 105°F AMBIENT, 80°F EAT (db), and 62°F EAT (wb). NATURAL GAS FIRED.
(2) FAN CFM AT PROJECT ALTITUDE
(3) PROVIDE 2" PLEATED FILTERS, 14" FACTORY ROOF CURB, FACTORY DISCONNECT, DRY-BULB ECONOMIZER, HINGED ACCESS PANELS, AND HAIL GUARDS.
(4) PROVIDE POWER EXHAUST.
(5) PROVIDE FACTORY UN-POWERED CONVENIENCE OUTLET.

MECHANICAL EQUIPMENT SCHEDULE

BB-1 BASE-BOARD HEATER: WALL MOUNTED, 6826 BTU/HR CAPACITY (2,000 WATT), 8 FOOT LENGTH. HEAVY DUTY COMMERCIAL TYPE. STAINLESS STEEL HEATING ELEMENT, ALUMINUM FINS, AND OVER TEMPERATURE THERMAL LIMIT.

MANUFACTURER: MARKEL
MODEL: F2920-096C
ELECTRICAL: 2,000 WATTS @ 208/1/60

DIVISION OF FACILITIES CONSTRUCTION AND MANAGEMENT
REVIEWED FOR CODE COMPLIANCE
SIGNATURE: FC
DATE: 4-23-13

HFS Architects
ARCHITECTURE
INTERIORS
PLANNING
1484 South State Street Salt Lake City, Utah 84115
801-596-0691/F: 596-0693
www.hfsa.com

CONSULTANT

OLSEN & PETERSON
consulting engineers, inc.
14 East 2700 South, Salt Lake City, UT 84115
Phone: (801) 486-4646 Fax: (801) 467-2531

LICENSED PROFESSIONAL ENGINEER # 183628 JEFFREY M. SEARE 4/19/13 STATE OF UTAH

MOUNTANLAND APPLIED TECHNOLOGY COLLEGE PHASE TWO

GENEVA BUILDING REMODEL
1410 BUSINESS PARK DRIVE
OREM, UTAH 84058

MARK	DATE	DESCRIPTION

DATE:	APRIL 19, 2013
AGENCY PROJECT NO:	09163260
HFSA PROJECT NO:	1204.01
CAD DWG FILE NO:	
DRAWN BY:	STAFF
CHECKED BY:	JMS
DESIGNED BY:	JAB
DWG TYPE:	
ARCHITECTURAL PHASE:	CONSTRUCTION BID DOCUMENTS

SHEET TITLE

MECHANICAL SCHEDULES

M-501

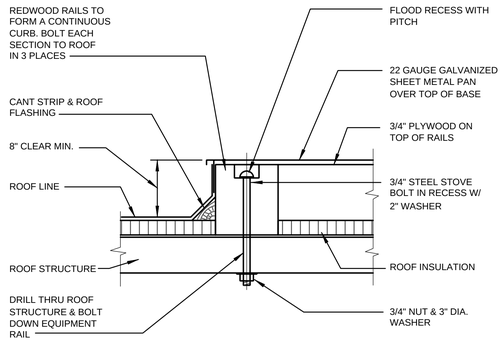

ROOFTOP EQUIPMENT BASE DETAIL

NOT TO SCALE 7-102 (7 / M-601)

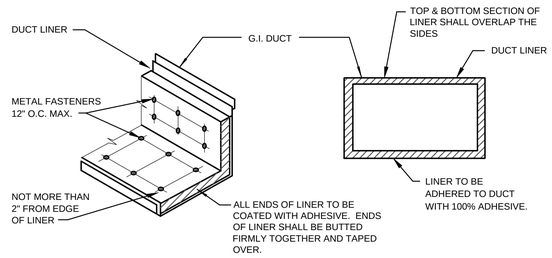

DUCT LINER DETAIL

NOT TO SCALE 6-106 (4 / M-601)

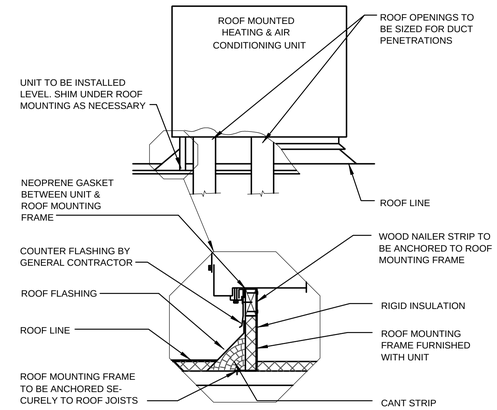

ROOF MTG. HEATING & A.C. UNIT DETAIL

NOT TO SCALE 11-117 (1 / M-601)

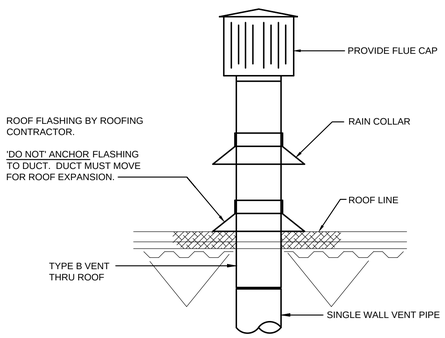

TYPICAL VENT PENETRATION AT ROOF DETAIL

NOT TO SCALE (8 / M-601)

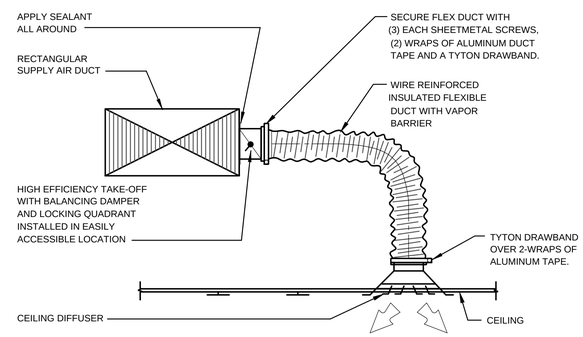

CEILING DIFFUSER DETAIL

NOT TO SCALE 6-100e (5 / M-601)

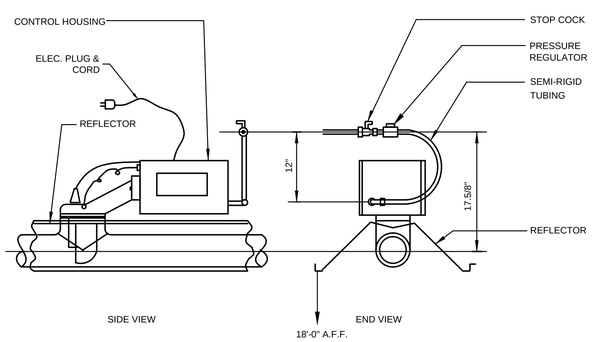

INFRA-RED HEATING BURNER UNIT DETAIL

NOT TO SCALE (9 / M-601)

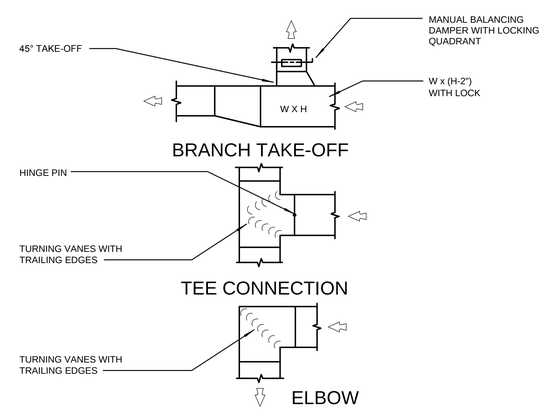

LOW PRESSURE DUCT DETAILS

NOT TO SCALE 6-101a (6 / M-601)

DIVISION OF FACILITIES CONSTRUCTION AND MANAGEMENT
REVIEWED FOR CODE COMPLIANCE
SIGNATURE: FC
DATE: 4-23-13

HFS Architects
ARCHITECTURE
INTERIORS
PLANNING
1484 South State Street Salt Lake City, Utah 84115
801-596-0691/F: 596-0693
www.hfsa.com

CONSULTANT

OLSEN & PETERSON
consulting engineers, inc.
14 East 2700 South, Salt Lake City, UT 84115
Phone: (801) 486-4646 Fax: (801) 467-2531

LICENSED PROFESSIONAL ENGINEER # 183628 JEFFREY M. SEARE 4/19/13 STATE OF UTAH

MOUNTANLAND APPLIED TECHNOLOGY COLLEGE PHASE TWO

GENEVA BUILDING REMODEL
1410 BUSINESS PARK DRIVE
OREM, UTAH 84058

MARK	DATE	DESCRIPTION

DATE:	APRIL 19, 2013
AGENCY PROJECT NO:	09163260
HFSA PROJECT NO:	1204.01
CAD DWG FILE NO:	
DRAWN BY:	STAFF
CHECKED BY:	JMS
DESIGNED BY:	JAB
DWG TYPE:	
ARCHITECTURAL PHASE:	CONSTRUCTION BID DOCUMENTS

SHEET TITLE

MECHANICAL DETAILS

M-601

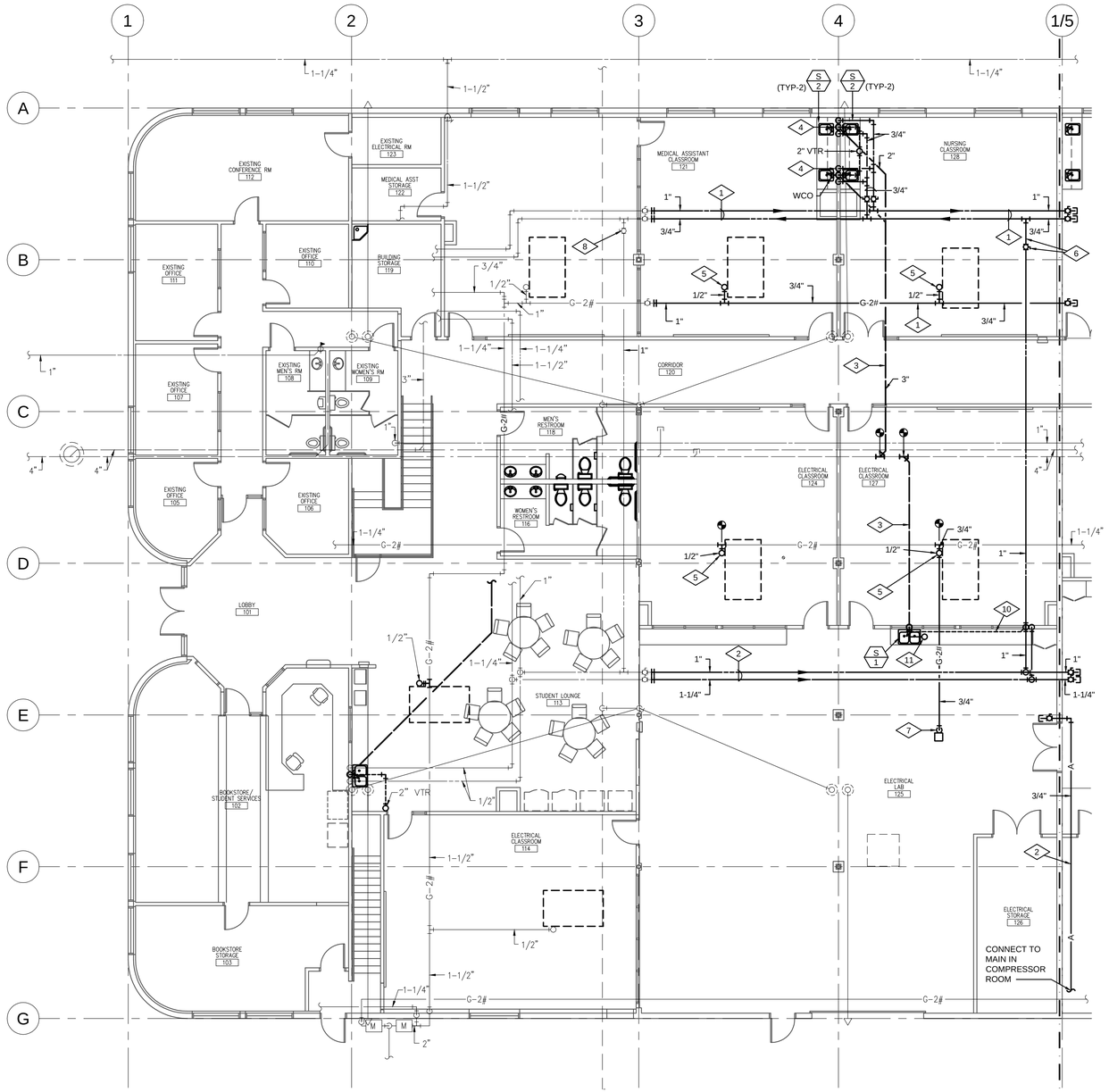

PLUMBING PLAN - AREA A

SCALE: 1/8" = 1'-0" 1ST FLOOR

N

REFERENCE NOTES

1. RUN PIPING ABOVE CEILING.
2. RUN PIPING EXPOSED, AS HIGH AS POSSIBLE.
3. WASTE PIPING TO RUN UNDER FLOOR. SAWCUT FLOOR AS NECESSARY FOR NEW INSTALLATION. EXCAVATE,BACKFILL,COMPACT, AND FINISH TO MATCH EXISTING.
4. PIPING TO DROP IN EXISTING WALL. GENERAL CONTRACTOR TO CUT WALL AND PATCH AS NECESSARY FOR NEW PIPING.
5. GAS PIPING UP THRU ROOF. PROVIDE SHUT-OFF, UNION, PRESSURE REGULATOR AND CONNECTION TO NEW UNIT. SEE DETAIL 4/P501.
6. BYPASS PIPING FOR HOT WATER RE-CIRCULATING. VALVE SHALL BE KEPT NORMALLY CLOSED WHEN PHASE 3 IS COMPLETE.
7. GAS PIPING CONNECTION TO APPLIANCE. PROVIDE SHUT-OFF, UNION, PRESSURE REGULATOR AND CONNECTION TO NEW UNIT. SEE DETAIL 4/P501. VENT REGULATOR THRU ROOF WHERE NECESSARY.
8. CLOSE EXISTING VALVE WHEN HOT WATER PIPING IS COMPLETE.
9. NOT USED
10. RUN 1/2" CW AND HW PIPING IN OR BEHIND CABINET BELOW COUNTERTOP. COORDINATE WITH GENERAL CONTRACTOR.
11. PROVIDE AIR ADMITANCE VALVE BELOW COUNTER-TOP FOR VENTING SINK.

ADDITIONAL NOTES

COMPRESSED AIR PIPING PHASE 1 (ALTERNATE #1).
PROVIDE 3/4" COMPRESSED AIR PIPING FROM COMPRESSOR ROOM LOCATED EAST OF PLUMBING STORAGE 132 TO A POINT JUST BELOW ROOF STRUCTURE AT GRID 5.E. STUB PIPING 24" INTO ELECTRICAL LAB 125 AND PROVIDE 3/4" FULL PORT BALL VALVE FOR FUTURE CONNECTION. PIPING TO BE RUN JUST BELOW BOTTOM OF ROOF STRUCTURE.

COMPRESSED AIR PIPING ABOVE GRADE SHALL BE TYPE "L" COPPER WITH SOLDERED WROUGHT COPPER FITTINGS.

S/2 ELKAY EGUH2115 "ELUMINA" (OR EQUAL OF JUST) STAINLESS STEEL, SINGLE COMPARTMENT UNDER-COUNTER MOUNTED, 18 GA, SATIN FINISH, 23.5" X 18.25" WITH A 21" X 15.75" X 8" DEEP BOWL STRAINER, ZURN Z831B1 FAUCET WITH 5 ½" GOOSENECK SWING SPOUT, 2 1/2" VANDAL RESISTANT COLOR-CODED LEVER HANDLES AND AERATOR, FLEXIBLE SUPPLIES, 1/4 TURN BALL VALVE LOOSE KEY STOPS, BRASS P-TRAP.

DIVISION OF FACILITIES CONSTRUCTION AND MANAGEMENT
REVIEWED FOR CODE COMPLIANCE
SIGNATURE: FC
DATE: 4-23-13

HFS Architects
ARCHITECTURE
INTERIORS
PLANNING
1484 South State Street Salt Lake City, Utah 84115
801-596-0691/F: 596-0693
www.hfsa.com

CONSULTANT

OLSEN & PETERSON
consulting engineers, inc.
14 East 2700 South, Salt Lake City, UT 84115
Phone: (801) 486-4646 Fax: (801) 467-2531

LICENSED PROFESSIONAL ENGINEER # 183628 JEFFREY M. SEARE 4/19/13 STATE OF UTAH

MOUNTANLAND APPLIED TECHNOLOGY COLLEGE PHASE TWO

GENEVA BUILDING REMODEL
1410 BUSINESS PARK DRIVE
OREM, UTAH 84058

MARK	DATE	DESCRIPTION

DATE:	APRIL 19, 2013
AGENCY PROJECT NO:	09163260
HFSA PROJECT NO:	1204.01
CAD DWG FILE NO:	
DRAWN BY:	STAFF
CHECKED BY:	JMS
DESIGNED BY:	JAB
DWG TYPE:	
ARCHITECTURAL PHASE:	CONSTRUCTION BID DOCUMENTS

SHEET TITLE

PLUMBING PLAN - AREA A

P-101A

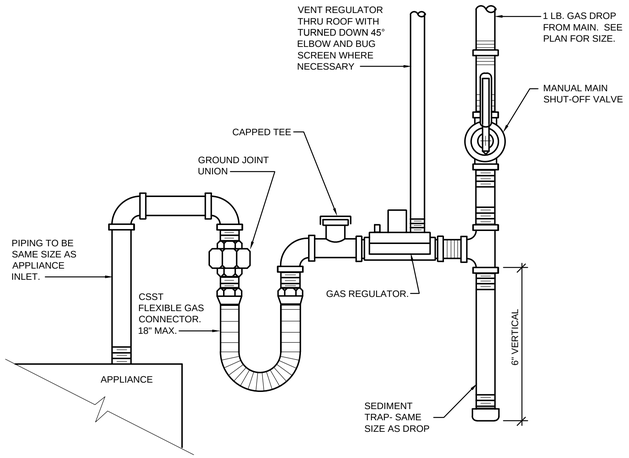

TYPICAL GAS LINE CONNECTION DETAIL

NOT TO SCALE — 4 / P-501

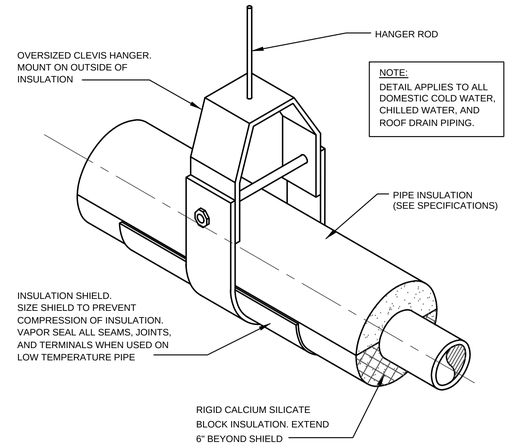

PIPE SUPPORT DETAIL

NOT TO SCALE — 20-109 — 1 / P-501

PLUMBING FIXTURE SCHEDULE

SYMBOL	FIXTURE	WASTE	VENT	C.W.	H.W.	NOTES
S 1	SINK	1-1/2"	1-1/2"	1/2"	1/2"	DOUBLE COMPARTMENT, STAINLESS STEEL
S 2	SINK	1-1/2"	1-1/2"	1/2"	1/2"	SINGLE COMPARTMENT, STAINLESS STEEL, UNDER COUNTER MOUNTED

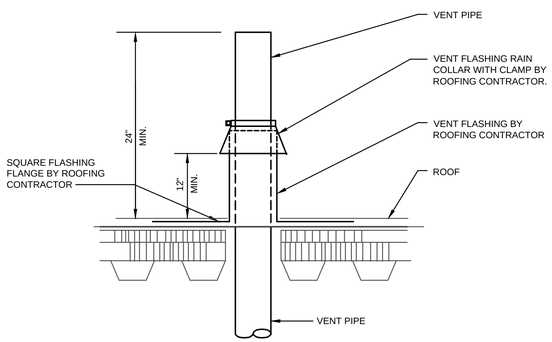

VENT THRU ROOF DETAIL

NOT TO SCALE — 5 / P-501

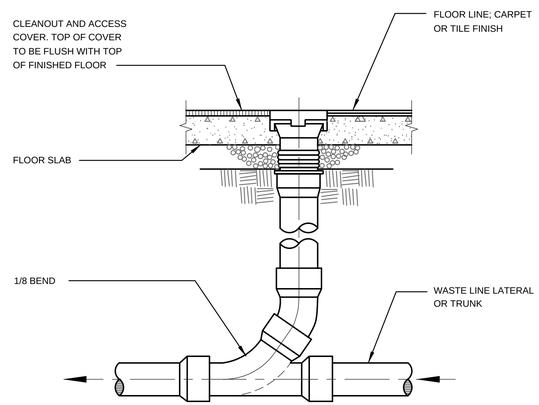

FLOOR CLEANOUT DETAIL

NOT TO SCALE — 14-100 — 2 / P-501

PLUMBING LEGEND

COLD WATER	
HOT WATER	
HOT WATER RE-CIRC	
DRAIN PIPING	D
WASTE PIPING	
ROOF DRAIN PIPING	RD
SECONDARY ROOF DRAIN PIPING	SRD
GAS	G-2#
COMPRESSED AIR	A
BALL VALVE	
UNION	
CHECK VALVE	
CALIBRATED BALANCING VALVE	
PIPING DROP	
PIPING RISE	

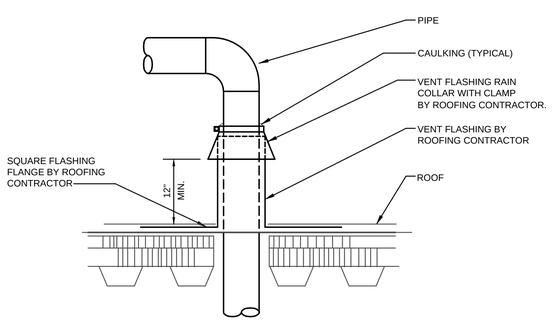

PIPE THRU ROOF PENETRATION DETAIL

NOT TO SCALE — 6 / P-501

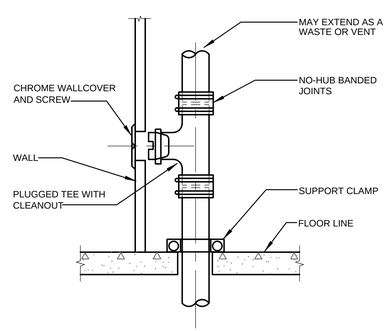

WALL CLEANOUT DETAIL

NOT TO SCALE — 14-107 — 3 / P-501

DIVISION OF FACILITIES CONSTRUCTION AND MANAGEMENT
REVIEWED FOR CODE COMPLIANCE
SIGNATURE: FC
DATE: 4-23-13

HFS Architects
ARCHITECTURE INTERIORS PLANNING
1484 South State Street Salt Lake City, Utah 84115
801-596-0691/F: 596-0693
www.hfsa.com

CONSULTANT

OLSEN & PETERSON
consulting engineers, inc.
14 East 2700 South, Salt Lake City, UT 84115
Phone: (801) 486-4646 Fax: (801) 467-2531

LICENSED PROFESSIONAL ENGINEER # 183628 JEFFREY M. SEARE 4/19/13 STATE OF UTAH

MOUNTANLAND APPLIED TECHNOLOGY COLLEGE PHASE TWO

GENEVA BUILDING REMODEL
1410 BUSINESS PARK DRIVE
OREM, UTAH 84058

MARK	DATE	DESCRIPTION

DATE:	APRIL 19, 2013
AGENCY PROJECT NO:	09163260
HFSA PROJECT NO:	1204.01
CAD DWG FILE NO:	
DRAWN BY:	STAFF
CHECKED BY:	JMS
DESIGNED BY:	JAB
DWG TYPE:	
ARCHITECTURAL PHASE:	CONSTRUCTION BID DOCUMENTS

SHEET TITLE

PLUMBING SCHEDULES & DETAILS

P-501

FIRE PROTECTION LEGEND

NO MARK — EXISTING SPRINKLERS SHALL REMAIN. NO WORK TO BE COMPLETED HERE.

LIGHT HAZARD, LAY-IN GYP. BOARD OR PLASTER CEILING, NEW SEMI RECESSED TYPE HEADS WITH WHITE ESCUTCHEONS SEE DETAIL 1/FP101A.. SEE GENERAL NOTE #12.

ORDINARY HAZARD GROUP 1 LAY-IN, GYP. BOARD, OR PLASTER CEILING, SEMI RECESSED HEADS WITH WHITE ESCUTCHEONS. SEE DETAIL 1/FP101A.. SEE GENERAL NOTE #12.

EXISTING FIRE SPRINKLER RISER

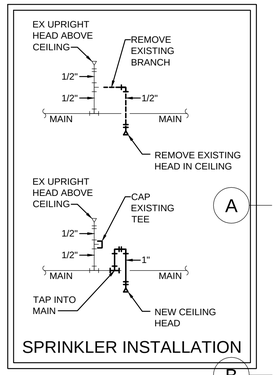

SPRINKLER INSTALLATION

GENERAL FIRE PROTECTION NOTES

1. THE FIRE SPRINKLER CONTRACTOR SHALL COORDINATE HIS WORK WITH THE ELECTRICAL, SHEET METAL, PLUMBING, AND CEILING CONTRACTORS TO AVOID ANY CONFLICTS IN PIPE ROUTING OR HEAD LOCATIONS.
2. RUN SPRINKLER PIPING AS HIGH AS POSSIBLE IN SPACE ABOVE CEILING AND COORDINATE WITH DUCTWORK.
3. FIRE SPRINKLER PLANS SHALL BE APPROVED BY ALL GOVERNING AGENCIES PRIOR TO SUBMITTING PLANS TO THE CONTRACTING OFFICER.
4. THE FIRE PROTECTION CONTRACTOR SHALL PROVIDE COMPLETE FIRE SPRINKLER SYSTEMS, INCLUDING ALL ITEMS AS REQUIRED OR RECOMMENDED BY ALL GOVERNING AGENCIES.
5. FIRE SPRINKLER SYSTEM SHALL COMPLY WITH N.F.P.A. 13 AND ALL GOVERNING AGENCIES.
6. FIRE SPRINKLER HEADS IN INDIVIDUAL ROOMS TO BE RUN IN STRAIGHT LINES AND COORDINATED WITH CEILING AND LIGHTS.
7. FIRE SPRINKLER CONTRACTOR SHALL COORDINATE HIS LOCATION OF PIPING VERY CAREFULLY WITH THE ARCHITECTURAL AND STRUCTURAL PLANS AND AS APPROVED BY THE ARCHITECT.
8. THE CONTRACTING OFFICE SHALL BE NOTIFIED (IN WRITING) AT LEAST THREE DAYS IN ADVANCE OF HYDROSTATIC TESTING AND FINAL INSPECTION OF OVERHEAD SYSTEMS PRIOR TO INSTALLATION OF CEILINGS.
9. CONTRACTOR SHALL FIELD VERIFY ALL PIPE LOCATIONS PRIOR TO FABRICATION OF PIPE SYSTEMS.
10. FIRE PROTECTION DRAWINGS ARE DIAGRAMMATIC ONLY.
11. ALL FIRE SPRINKLER RELATED DEMOLITION AND PREPARATION FOR RE-ROUTING FOR ALL AREAS OF WORK SHOWN SHALL BE COMPLETED BY THE FIRE SPRINKLER CONTRACTOR.
12. ALL NEW SPRINKLERS TO BE INSTALLED IN AREAS WITH NEW CEILINGS SHALL BE RUN WITH NEW BRANCH PIPING TAPPED INTO THE EXISTING MAINS. EXISTING PIPING TO AREAS WHERE CEILINGS ARE REMOVED SHALL HAVE THE BRANCH PIPING CAPPED. SEE SPRINKLER INSTALLATION SKETCH.

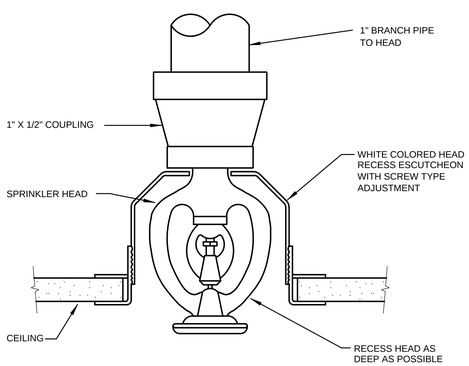

SPRINKLER HEAD DETAIL (1 / 9-101a / FP101A)

NOT TO SCALE

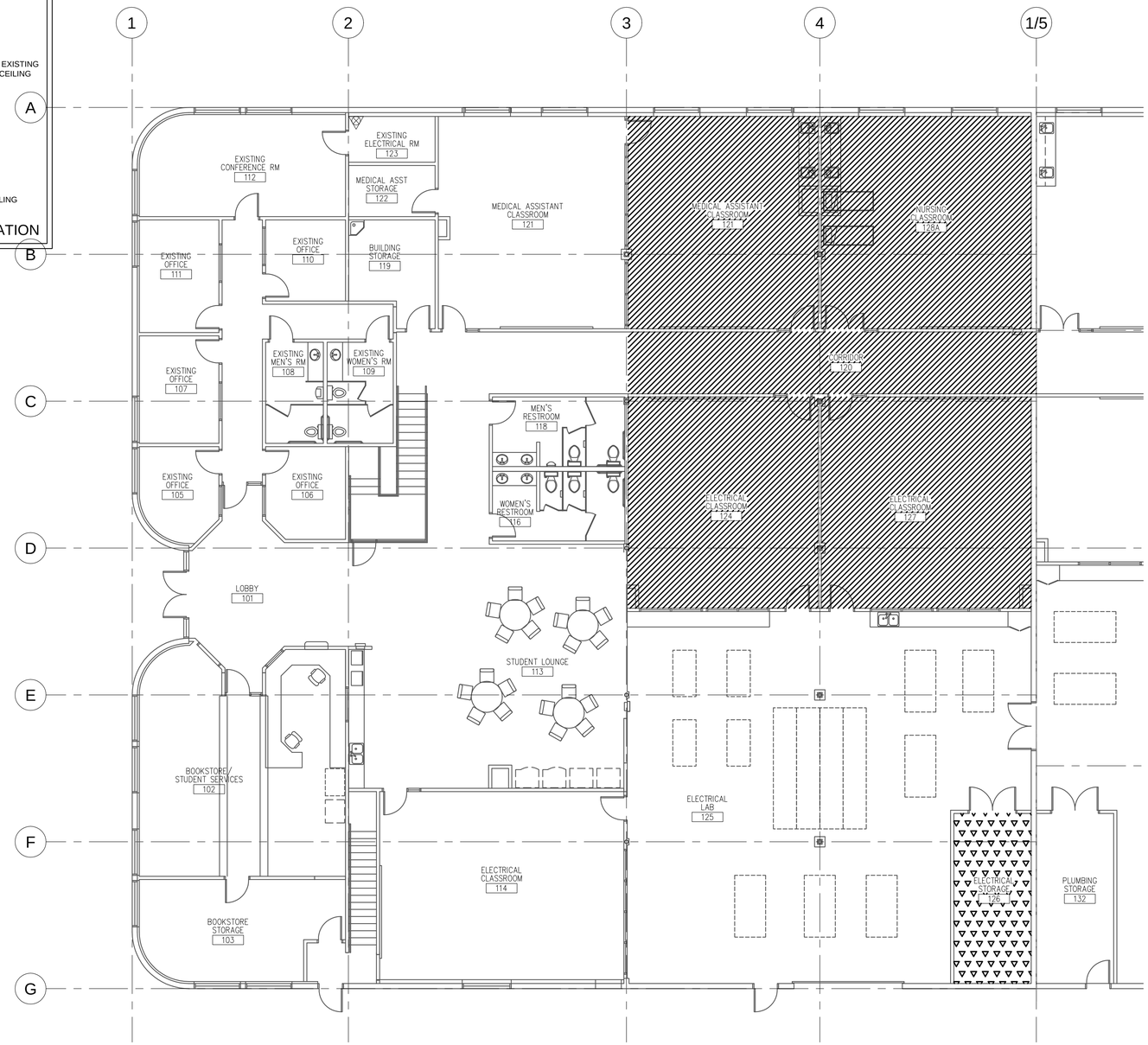

FIRE PROTECTION PLAN - AREA A

SCALE: 1/8" = 1'-0" 1ST FLOOR

N

DIVISION OF FACILITIES CONSTRUCTION AND MANAGEMENT
REVIEWED FOR CODE COMPLIANCE
SIGNATURE: FC
DATE: 4-23-13

HFS Architects
ARCHITECTURE
INTERIORS
PLANNING
1484 South State Street Salt Lake City, Utah 84115
801-596-0691/F: 596-0693
www.hfsa.com

CONSULTANT

OLSEN & PETERSON
consulting engineers, inc.
14 East 2700 South, Salt Lake City, UT 84115
Phone: (801) 486-4646 Fax: (801) 467-2531

LICENSED PROFESSIONAL ENGINEER # 183628 JEFFREY M. SEARE 4/19/13 STATE OF UTAH

MOUNTANLAND APPLIED TECHNOLOGY COLLEGE PHASE TWO

GENEVA BUILDING REMODEL
1410 BUSINESS PARK DRIVE
OREM, UTAH 84058

MARK	DATE	DESCRIPTION

DATE:	APRIL 19, 2013
AGENCY PROJECT NO:	09163260
HFSA PROJECT NO:	1204.01
CAD DWG FILE NO:	
DRAWN BY:	STAFF
CHECKED BY:	JMS
DESIGNED BY:	JAB
DWG TYPE:	
ARCHITECTURAL PHASE:	CONSTRUCTION BID DOCUMENTS

SHEET TITLE

FIRE PROTECTION PLAN - AREA A

FP-101A

ABBREVIATIONS INDEX

ABBREV.	DESCRIPTION	ABBREV.	DESCRIPTION
#	NUMBER	MH	MANHOLE
AC	ALTERNATING CURRENT	MIC	MICROPHONE
A.F.F.	ABOVE FINISH FLOOR	MIN	MINIMUM
AIC	AMPS INTERRUPTING CAPACITY	MTG	MOUNTING
AM	AMPS METER	MTR	MOTOR
AMP	AMPERE	N/A	NOT APPLICABLE
ANN	ANNUNCIATOR	NC	NORMALLY CLOSED
ATS	AUTOMATIC TRANSFER SWITCH	NEC	NATIONAL ELECTRICAL CODE
AUX	AUXILIARY	NEMA	NATIONAL ELECT. MANUFAC. ASSOC.
AWG	AMERICAN WIRE GAUGE	NFC	NATIONAL FIRE CODE
BC	BARE COPPER	NFPA	NATIONAL FIRE PROTECTION ASSOC.
BFG	BELOW FINISH GRADE	N.I.C.	NOT IN CONTRACT
C	CONDUIT	NO	NORMALLY OPENED
CAB	CABINET	NTS	NOT TO SCALE
CATB	COMMUNITY ANTENNA TELEVISION	OS & Y	OUTSIDE SCREW & YOKE
CATV	CABLE TELEVISION	PB	PUSHBUTTON
CKT	CIRCUIT	PF	POWER FACTOR
CLG	CEILING	PFR	PHASE FAILURE RELAY
CNTR	CONTRACTOR	PNL	PANEL
C.O.	CONDUIT ONLY	PT	POTENTIAL TRANSFORMER
CRT	COMPUTER TERMINAL	PVC	POLYVINYL CHLORIDE CONDUIT
CT	CURRENT TRANSFORMER	(R)	RELOCATE
CU	COPPER	RECEP	RECEPTACLE
C/W	COMPLETE WITH	REQ	REQUIREMENT
DB	DECIBEL	RLA	RATED LOAD AMPS
DC	DIRECT CURRENT	RMS	ROOT MEAN SQUARE
DWG	DRAWING	SE	SERVICE ENTRANCE
(E)	EXISTING	SPEC	SPECIFICATIONS
EC	EMPTY CONDUIT	SPKR	SPEAKER
EG	EMERGENCY GENERATOR	SS	SELECTOR SWITCH
EMT	ELECTRICAL METALLIC TUBING	SW	SWITCH
EX	EXPLOSION PROOF	SWBD	SWITCHBOARD
FACP	FIRE ALARM CONTROL PANEL	SWGR	SWITCHGEAR
FC	FOOT CANDLE	TTB	TELEPHONE TERMINAL BOARD
FT	FOOT	TTC	TELEPHONE TERMINAL CABINET
GFI	GROUND FAULT INTERRUPTER	TV	TELEVISION
GND	GROUND	TYP	TYPICAL
GRC	GALVANIZED RIGID CONDUIT	UG	UNDERGROUND
HP	HORSE POWER	UP	UTAH POWER
HZ	HERTZ	UPS	UNINTERRUPTED POWER SUPPLY
IG	ISOLATED GROUND	V	VOLT (KV–KILOVOLT)
IMC	INTERMEDIATE METALLIC CONDUIT	VA/R	VOLT–AMPS/REACTIVE
IN	INCH	VM	VOLT METER
J–BOX	JUNCTION BOX	W	WATTS
KV	KILOVOLT	W/	WITH
KVA	KILOVOLT AMPERES	WH	WATTHOUR METER
KVAR	KILOVARS	W/O	WITHOUT
KW	KILOWATT	WP	WEATHERPROOF
LRA	LOCKED ROTOR AMPS	XFMR	TRANSFORMER
LTG	LIGHTING	XFMR SW	TRANSFER SWITCH
MNF	MANUFACTURER	XP	EXPLOSION PROOF
MATV	MASTER ANTENNA TELEVISION	1P	SINGLE–PHASE
MAX	MAXIMUM	2P	TWO–POLE
MB	MAIN BUS	3P	THREE–POLE
MCC	MOTOR CONTROL CENTER	4P	FOUR–POLE
MCM	1000 CIRCULAR MILLS	ø	PHASE

GENERAL NOTES

1. CONSULT ARCHITECTURAL REFLECTED CEILING PLANS FOR EXACT LOCATION OF ALL LIGHTING FIXTURES.
2. VERIFY ALL EQUIPMENT DIMENSIONS AND LOCATIONS BEFORE BEGINNING ROUGH IN. CONSULT ALL APPLICABLE CONTRACT DRAWINGS AND SHOP DRAWINGS TO INSURE NEC CODE CLEARANCES REQUIRED AROUND ALL ELECTRICAL EQUIPMENT.
3. CONTRACTOR SHALL VERIFY ALL ELECTRICAL LOADS (VOLTAGE, PHASE, CONNECTION REQUIREMENTS, ETC.) OF EQUIPMENT FURNISHED UNDER DIVISION 15 WITH APPROVED MECHANICAL SHOP DRAWINGS BEFORE BEGINNING ROUGH IN.
4. SEE SECTION 16510 OF THE SPECIFICATION REQUIRED COORDINATION MEETINGS WITH MECHANICAL AND CEILING CONTRACTORS.
5. SEE APPLICABLE SHOP DRAWINGS FOR ROUGH IN LOCATION OF ALL EQUIPMENT, WIRING DEVICES, ETC. WHERE APPLICABLE MOUNT ALL WIRING DEVICES ABOVE BACK SPLASH EXCEPT THOSE SERVING UNDER COUNTER EQUIPMENT.
6. SEE SPECIFICATION FOR ENERGY SAVING LAMP AND BALLAST REQUIREMENTS.
7. FINISHES OF ALL LIGHT FIXTURES SHALL BE AS SELECTED BY ARCHITECT.
8. THE ELECTRICAL CONTRACTOR SHALL NOTIFY AND COOPERATE WITH THE MECHANICAL CONTRACTOR SUCH THAT NO PIPING, DUCTS, OR EQUIPMENT FOREIGN TO THE OPERATION OF THE ELECTRICAL EQUIPMENT SHALL BE PERMITTED TO BE INSTALLED IN, ENTER OR PASS THRU ELECTRICAL ROOMS OR SPACES, OR ABOVE OR BELOW ELECTRICAL EQUIPMENT IN OTHER AREAS.
9. ELECTRICAL BOXES SHALL NOT BE LOCATED IN MASONRY COLUMNS IN BRICK WALLS OR IN GROUTED CELLS ADJACENT TO OPENINGS. COORDINATE LOCATION OF BOXES WITH MASONRY CONTRACTOR.
10. ALL PENETRATIONS OF FIRE RATED FLOORS, WALLS, AND CEILINGS SHALL BE SEALED WITH APPROVED MATERIAL TO MAINTAIN FIRE RATING OF SURFACE PENETRATED.
11. CIRCUITS EXTENDING OVER 70' FOR 120 VOLT AND 165' FOR 277 VOLT 20 AMP CIRCUITS SHALL BE RUN WITH MINIMUM #10 CONDUCTORS.

DEMOLITION NOTES

1. COORDINATE ALL NEW ELECTRICAL EQUIPMENT REQUIREMENTS AND MAKE CONNECTION TO EXISTING SYSTEMS. THIS INCLUDES LIGHTING, POWER, SIGNAL, RACEWAY AND OTHER SYSTEMS INCLUDED UNDER DIVISION 16.
2. RELOCATE, REWIRE AND/OR RECONNECT EXISTING ELECTRICAL DEVICES AND/OR EQUIPMENT THAT FOR ANY REASON OBSTRUCTS CONSTRUCTION.
3. CONCEAL ALL RACEWAY AND WIRING IN EXISTING WALLS, CEILINGS, FLOORS, ETC. EXCEPT WHERE THE USE OF SURFACE METAL RACEWAYS (E.G. WIRE MOLD) IS INDICATED ON DRAWINGS OR IN SPEC.
4. LEAVE ALL EXISTING EQUIPMENT, IN PORTIONS OF THE BUILDING NOT BEING REMODELED, IN WORKING CONDITION. RESTORE ALL INTERRUPTED BRANCH CIRCUITS, FEEDERS, ETC. TO WORKING CONDITION.
5. EXISTING RACEWAYS MAY BE REUSED (IN PLACE) WHERE POSSIBLE, AND WHERE IN COMPLIANCE WITH THE SPECIFICATIONS AND THE INTENT OF THE CONTRACT DOCUMENTS. INSURE INTEGRITY OF EXISTING RACEWAY BEFORE REUSE.
6. REMOVE ALL RACEWAYS, CONDUCTORS, BOXES, DEVICES, EQUIPMENT, ETC. THAT ARE NOT TO BE REUSED.
7. REMOVE EXISTING LIGHT FIXTURES WHICH ARE NOT TO BE REUSED, PLACE IN CARTON, LABEL APPROPRIATELY, AND RETURN TO OWNER, OR PROPERLY DISPOSE OF FIXTURES THAT THE OWNER CHOOSES NOT TO KEEP.
8. DO NOT PENETRATE STRUCTURAL ELEMENTS OF FLOORS, WALLS, CEILINGS, ROOFS, ETC.
9. DISCONNECT AND RECONNECT ANY/ALL FIXTURES, DEVICES, EQUIPMENT, ETC. REQUIRED FOR PROPER COMPLETION OF THE WORK.

INDEX OF ELECTRICAL DRAWINGS

EG001 SYMBOLS, SCHEDULES AND NOTES
EG002 LIGHT FIXTURE SCHEDULE

ED101A ELECTRICAL DEMOLITION PLAN – MAIN FLOOR AREA A

ED102 ELECTRICAL DEMOLITION PLAN – UPPER FLOOR AREA A

EL101 LIGHTING PLAN – MAIN FLOOR AREA A

EP101 POWER PLAN – MAIN FLOOR AREA A
EP102 POWER PLAN – UPPER FLOOR AREA A
EP103 POWER PLAN – ROOF

EX101 ONE–LINE DIAGRAM
EX102 PANELBOARD SCHEDULES

EX201 ELECTRICAL DIAGRAMS
EX202 ELECTRICAL DIAGRAMS

ELECTRICAL SYMBOL SCHEDULE

1. SEE FIXTURE SCHEDULE FOR TYPE, MOUNTING AND WATTAGE.
2. HEIGHT MEASURED TO CENTER LINE OF THE BOX FROM THE FINISH FLOOR.
3. REFER TO DRAWINGS FOR DIRECTIONAL ARROWS.
4. SUBSCRIPT KEYS SWITCH TO FIXTURES CONTROLLED.
5. NEMA TYPE 'ND' NON–FUSED UNLESS NOTED 'F' (FUSED). USE 'HD' 480 V.
6. HEIGHT TO BE THE LOWER OF EITHER 80" A.F.F. OR 6" BELOW CEILING.
7. PROVIDE H.O.A. AND S.S. PUSHBUTTONS AS REQUIRED.
8. DOUBLE ARROWS DENOTE A DOUBLE FACE UNIT.
9. COORDINATE WITH MILLWORK SHOP DRAWINGS AND ELEVATIONS FOR HEIGHT.
10. SUBSCRIPT DENOTES NEMA CONFIGURATION.
11. HEIGHT MEASURED TO BOTTOM OF THE BOX FROM FINISH FLOOR.

* TYPICAL SYMBOL SCHEDULE. SOME SYMBOLS MAY NOT BE USED IN THIS SET OF DRAWINGS.

STANDARD MOUNTING HEIGHT UNLESS OTHERWISE NOTED ON PLANS

SYMBOL	DESCRIPTION	MOUNTING HEIGHT	NOTES
	ONE CIRCUIT, TWO WIRE HOME RUN TO PANEL		
	2 CIRCUIT, 3 WIRE, COMMON NEUTRAL HOME RUN		
	3 CIRCUIT, 4 WIRE, COMMON NEUTRAL HOME RUN		
	CONDUIT RUN CONCEALED IN WALL OR CEILING		
	CONDUIT RUN CONCEALED IN FLOOR OR GROUND		
	CONDUIT UP		
	CONDUIT DOWN		
	CONDUIT STUB LOCATION	CAP CONDUIT	
	CONDUIT/CIRCUIT CONTINUATION		
	CABLE TRAY	AS NOTED	
	CEILING LIGHT FIXTURE	CEILING	1.
	WALL LIGHT FIXTURE	AS NOTED	1.
	RECESSED DOWNLIGHT FIXTURE	CEILING	1.
	RECESSED WALL–WASH FIXTURE	CEILING	1.
	FLUORESCENT LIGHT FIXTURE	AS NOTED	1
	FLUORESCENT EGRESS LIGHT FIXTURE	AS NOTED	UNSWITCHED
	AREA LIGHT POLE AND FIXTURE	CONCRETE BASE	SEE DIAGRAM
	FLOOD OR TRACK FIXTURE	AS NOTED	
	CEILING MOUNTED EXIT LIGHT	CEILING	1.3.8.
	WALL MOUNTED EXIT LIGHT	AS NOTED	1.3.8.
$	SINGLE POLE SWITCH	+4'–0"	2.
$a	SINGLE POLE SWITCH	+4'–0"	4. 2.
$3	THREE–WAY SWITCH	+4'–0"	2.
$4	FOUR–WAY SWITCH	+4'–0"	2.
$K	KEY OPERATED SWITCH	+4'–0"	2.
$P	SWITCH WITH PILOT LIGHT	+4'–0"	2.
$D	VARIABLE INTENSITY SWITCH	+4'–0"	2.
$TM	TIMER SWITCH	+4'–0"	2.
$	MOMENTARY CONTACT SWITCH, CENTER POSITION OFF	+4'–0"	2.
D L E	SINGLE GANG LV LIGHTING CONTROL WITH MULTIPLE BUTTONS	+4'–0"	2.
	OCCUPANCY SENSOR	CEILING	
	OCCUPANCY SENSOR	+4'–0"	2.
PP	POWER PACK	CEILING	SEE DIAGRAM, SPEC.
A	AUTOMATIC RELAY PACK	CEILING	SEE DIAGRAM. SPEC.
T	LOW VOLTAGE TRANSFORMER		
	DUPLEX RECEPTACLE UPPER OUTLET SWITCH CONTROLLED	+16" OR AS NOTED	9. 11.
	SIMPLEX RECEPTACLE	+16" OR AS NOTED	9. 11.
	DUPLEX RECEPTACLE	+16" OR AS NOTED	9. 11.
A	DUPLEX RECEPTACLE		9.
W	ELECTRIC WATER COOLER RECEPTACLE		SEE DIAGRAM
WP	WEATHERPROOF RECEPTACLE	+24" OR AS NOTED	2. 9.
IG	ISOLATED GROUND RECEPTACLE	+16" OR AS NOTED	9. 11.
	GROUND FAULT INTERRUPTER DUPLEX RECEPTACLE	+16" OR AS NOTED	9. 11.
	DUPLEX RECEPTACLE EMERGENCY POWER (RED)	+16" OR AS NOTED	9. 11.
	FOURPLEX RECEPTACLE	+16" OR AS NOTED	9. 11.
	FOURPLEX RECEPTACLE EMERGENCY POWER (RED)	+16" OR AS NOTED	9. 11.
	TVSS PROTECTED RECEPTACLE	+16" OR AS NOTED	9. 11.
	FLOOR OUTLET WITH 20A DEVICE	FLOOR	
	MULTIPLE SERVICE FLOOR BOX	FLOOR	
	SPECIAL PURPOSE OUTLET	+16" OR AS NOTED	10. WITH CAP. 11.
	CORD DROP		SEE DIAGRAM
	PLUGMOLD	+46" OR AS NOTED	
	TELEVISION OUTLET	+16" OR AS NOTED	11.
	DATA OUTLET	+16" OR AS NOTED	9. 11.
	TELEPHONE OUTLET	+16" OR AS NOTED	9. 11.
	TELEPHONE/DATA OUTLET	+16" OR AS NOTED	9. 11.
	WIRELESS ACCESS POINT	CEILING	
	TELEPHONE OUTLET	FLOOR	
	CALL SWITCH	+4'–0"	2.
C	CLOCK OUTLET	+7'–6"	8.
C	CLOCK/SPEAKER COMBINATION	+7'–6"	
J	JUNCTION BOX ('F' IN FLOOR)	AS NOTED	
	MOTOR OUTLET	TO SUIT EQUIP.	
P	PHOTO–ELECTRIC CONTROL	AS NOTED	TORK 2000A
D	DIGITAL DAY–LIGHT SENSOR	CEILING	SEE DIAGRAM, SPECIFICATION
TC	TIME CLOCK	+5'–0"	2.
	PUSHBUTTON	+4'–0"	2.

STANDARD MOUNTING HEIGHT UNLESS OTHERWISE NOTED ON PLANS

SYMBOL	DESCRIPTION	MOUNTING HEIGHT	NOTES
	NON–FUSED DISCONNECT SWITCH	+5'–0"	5.
F	FUSED DISCONNECT SWITCH	+5'–0"	5.
$T	MANUAL STARTER THERMAL OVERLOAD SWITCH WITH PILOT LIGHT	+4'–0"	2.
	MAGNETIC STARTER	+5'–0"	7.
	MAGNETIC STARTER / DISCONNECT COMBINATION	+5'–0"	
VFD	VARIABLE FREQUENCY DRIVE	+6'–6"	
	PANEL BOARD	TOP AT +6'–0"	
	MAIN DISTRIBUTION PANEL		
	TELEPHONE TERMINAL BOARD		
	BELL	+7'–6"	
	CHIME	+7'–6"	
F	FIRE ALARM MANUAL STATION	+4'–0"	2.
H	FIRE ALARM SIGNAL HORN/STROBE PROJECTORS	+6'–8"	6.
H	FIRE ALARM SIGNAL HORN/STROBE	+6'–8"	6.
H	CONCEALED FIRE ALARM SIGNAL HORN/STROBE	+6'–8"	6.
H	CONCEALED FIRE ALARM SIGNAL HORN/STROBE	CEILING	
E	FIRE ALARM SIGNAL SPEAKER/STROBE	+6'–8"	6.
E	CONCEALED FIRE ALARM SIGNAL SPEAKER/STROBE	+6'–8"	6.
E	CONCEALED FIRE ALARM SIGNAL SPEAKER/STROBE	CEILING	
S	FIRE ALARM STROBE	+6'–8"	6.
S	CONCEALED FIRE ALARM SIGNAL STROBE	+6'–8"	6.
S	CONCEALED FIRE ALARM SIGNAL STROBE	CEILING	
K	FIRE ALARM SPEAKER ONLY	+6'–8"	6.
S	SMOKE DETECTOR	CEILING	
D	DUCT SMOKE DETECTOR		MTD. IN DUCT
SC	SMOKE/CABON MONOXIDE DETECTOR	CEILING	
C	CARBON MONOXIDE DETECTOR	CEILING	
H	HEAT DETECTOR	CEILING	
D	FIRE/SMOKE DAMPER		
	DOOR HOLDER	AS NOTED	
FS	FLOW SWITCH		
TS	TAMPER SWITCH		
WF	WATER FLOOD INDICATOR		
	O.S. & Y. VALVE		SEE DIAGRAM
R	FIRE ALARM RELAY		
CM	FIRE ALARM CONTROL MODULE		
MM	FIRE ALARM MONITOR MODULE		
D	DURESS PUSHBUTTON	+4'–0"	
D 1	SECURITY SYSTEM DOOR SWITCH	DOOR JAMB	
D 2	SECURITY SYSTEM OVERHEAD DOOR SWITCH	CEILING	MOUNT AS PER. MAN
M	MAGNETIC SHEAR LOCK		
A	SECURITY SYSTEM KEYED ACCESS SWITCH	+4'–0"	2.
I	INFRARED SENSOR	AS NOTED	
M	SECURITY MOTION DETECTOR		MOUNT AS PER. MAN
G	GLASS BREAK DETECTOR	CEILING	
ES	ELECTRIC DOOR STRIKE		
CR	ACCESS CONTROL CARD READER	+4'–0"	2.
	CLOSED CIRCUIT TELEVISION CAMERA	AS NOTED	
	DOOR POSITION INDICATING SWITCH		
#	SOUND SYSTEM SPEAKER	+8'–0" OR AS NOTED	
IC	INTERCOM SPEAKER	AS NOTED	
	SPEAKER	CEILING	
V	VOLUME CONTROL	+4'–0"	2.
SV	VOLUME CONTROLW/ SOURCE SELECTOR	+4'–0"	2.
M	MICROPHONE OUTLET	+16"	11.
D	DUAL MICROPHONE OUTLET	+16"	11.
MW	MICROPHONE OUTLET W/ LINE LEVEL INPUT	+16"	11.
MU	MICROPHONE OUTLET W/ TAPE RECORDER JACK	+16"	11.
M	MICROPHONE FLOOR OUTLET	FLOOR	
M	MICROPHONE CEILING OUTLET	CEILING	
IR	INFARED WALL SENSOR	7'–0"	2.
IR	INFARED CEILING SENSOR	CEILING	SEE DIAGRAM, SPEC.
	SOUND EQUIPMENT CABINET		CIRCUIT TO 120V
842	ARCHITECTURAL ROOM NUMBER		
A	LIGHT FIXTURE (LETTER DESIGNATES TYPE)		
EQ 34	EQUIPMENT NUMBER		

DIVISION OF FACILITIES CONSTRUCTION AND MANAGEMENT
REVIEWED FOR CODE COMPLIANCE
SIGNATURE: FC
DATE: 4-23-13

HFSArchitects
ARCHITECTURE
INTERIORS
PLANNING
1484 South State Street
Salt Lake City, Utah 84101
801-596-0691/F: 596-0693
www.hfsa.com

CONSULTANT

BNA CONSULTING
SALT LAKE ST.GEORGE
635 South State Street
Salt Lake City, Utah 84111
P:801.532.2196
F:801.532.2305
www.bnaconsulting.com

© 2008 BNACONSULTING

LICENSED PROFESSIONAL ENGINEER
No. 4816
GARY W. MESSER
STATE OF UTAH

MOUNTAINLAND APPLIED TECHNOLOGY COLLEGE PHASE TWO

GENEVA BUILDING REMODEL
1410 BUSINESS PARK DRIVE
OREM, UTAH 84058

MARK	DATE	DESCRIPTION

DATE:	APRIL 19, 2013
AGENCY PROJECT NO:	09163260
HFSA PROJECT NO:	1204.01
CAD DWG FILE NO:	
DRAWN BY:	BNA
CHECKED BY:	RLW
DESIGNED BY:	RLW
DWG TYPE:	ELECTRICAL
ARCHITECTURAL PHASE:	CONSTRUCTION BID DOCUMENTS

SHEET TITLE

SYMBOLS, SCHEDULES AND NOTES

EG001

SHEET OF

By: calvin Apr 19, 2013 – 9:01am
J:\2012\030A\DRAW\PHASE 2\e030A–EG001.dwg

EQUIPMENT SCHEDULE

MATC GENEVA PHASE 2

UNIT #	FUNCTION	LOAD	VOLT	PHASE	FULL LOAD AMPS	CONDUIT SIZE	WIRES NO. SETS	WIRES NO.	WIRES SIZE	WIRES EQUIP. GND (1)	OCPD TYPE	OCPD AMPS	REF. NOTES STARTER	REF. NOTES DISCONNECT	REF. NOTES OTHER	REMARKS
AC-1	SPLIT SYSTEM (INDOOR)	8.6 MCA	208	1	6.88	3/4"	1	2	12	12	CB	20		1A		
AC-2	SPLIT SYSTEM (OUTDOOR)	7.3 MCA	208	1	5.84	3/4"	1	2	12	12	CB	20		1A		
BB-1	BASE-BOARD HEATER	2 KVA	208	1	9.62	3/4"	1	2	12	12	CB	20		1A		
CP-1	CIRCULATING PUMP	1/20 HP	120	1	2.00	3/4"	1	2	12	12	CB	15	4A			
EF-1	EXHAUST FAN	1/4 HP	120	1	5.80	3/4"	1	2	12	12	CB	15	4A			
EF-2	EXHAUST FAN	1/6 HP	120	1	4.40	3/4"	1	2	12	12	CB	15	4A			
EWH-1	ELECTRIC WALL HEATER	2 KVA	208	1	9.62	3/4"	1	2	12	12	CB	20		1A		
RTU-1	ROOF TOP UNIT	20.8 MCA	208	3	16.64	3/4"	1	3	10	10	CB	25		2A		
RTU-2	ROOF TOP UNIT	25.3 MCA	208	3	20.24	3/4"	1	3	10	10	CB	35		2A		
RTU-3	ROOF TOP UNIT	25.3 MCA	208	3	20.24	3/4"	1	3	10	10	CB	35		2A		
RTU-4	ROOF TOP UNIT	25.3 MCA	208	3	20.24	3/4"	1	3	10	10	CB	35		2A		
RTU-5	ROOF TOP UNIT	20.8 MCA	208	3	16.64	3/4"	1	3	10	10	CB	25		2A		
RTU-6	ROOF TOP UNIT	25.3 MCA	208	3	20.24	3/4"	1	3	10	10	CB	35		2A		
RTU-10	ROOF TOP UNIT	20.8 MCA	208	3	16.64	3/4"	1	3	10	10	CB	25		2A		
RTU-11	ROOF TOP UNIT	20.8 MCA	208	3	16.64	3/4"	1	3	10	10	CB	25		2A		

NOTES:
1. NON-FUSED DISCONNECT SWITCH
2. FUSED DISCONNECT SWITCH
3. BREAKER IN ENCLOSURE
4. MANUAL STARTER W/THERMAL OVERLOAD
5. MAGNETIC STARTER
6. MAGNETIC STARTER/NON-FUSED DISCONNECT COMBINATION
7. MAGNETIC STARTER/FUSED DISCONNECT COMBINATION
8. MAGNETIC STARTER/BREAKER COMBINATION
9. VARIABLE FREQUENCY DRIVE
10. REDUCED VOLTAGE STARTER
11. DIRECT CONNECTION
12. RECEPTACLE/SPECIAL PURPOSE OUTLET/ETC.
13. TWO-SPEED STARTER, COORDINATE W/MOTOR TYPE
14. SOLID STATE SOFT STARTER

A. FURNISHED, INSTALLED, AND CONNECTED UNDER DIVISION 16
B. FURNISHED AND INSTALLED UNDER ANOTHER DIVISION REQUIRING CONNECTION UNDER DIVISION 16.
C. FURNISHED UNDER ANOTHER DIVISION BUT INSTALLED AND CONNECTED UNDER DIVISION 16.
D. FURNISHED, INSTALLED AND CONNECTED UNDER ANOTHER DIVISION.

CB = CIRCUIT BREAKER - THERMAL MAGNETIC
CKW = CHILLER KILOWATTS

NOTE 1: PER 250.122(A), EQUIPMENT GROUND IS NOT REQUIRED TO BE LARGER THAN PHASE CONDUCTOR.

FIXTURE SCHEDULE

MATC GENEVAL PH 2

TYPE	DESCRIPTION	CATALOG NUMBER	VOLTS	LAMPS
A	2 X 4 3 LAMP T8 FLUORESCENT LAY-IN INDIRECT FIXTURE WITH ELECTRONIC BALLAST	HE WILLIAMS DIGS 24 332 WPR EB1 120	120	(3) FO32/835/ECO 3100 LUMEN
AE	2 X 4 3 LAMP T8 FLUORESCENT LAY-IN INDIRECT FIXTURE WITH ELECTRONIC BALLAST AND EMERGENCY BATTERY PACK	HE WILLIAMS DIGS 24 332 WPR EB1 120 XEB-14-LM		(3) FO32/835/ECO 3100 LUMEN
D	SURFACE MOUNTED WRAPAROUND WITH PRISMATIC ACRYLIC LENS AND ELECTRONIC BALLAST	HE WILLIAMS 17-4-232-A-EB2-BD-120	120	(2) F032/835/ECO 3100 LUMEN
EM1	EXTERIOR WALL MOUNTED WET LOCATION RATED EGRESS LIGHT FIXTURE. EQUIPPED WITH TWO 6W XENON LAMPS. EQUIPPED WITH NICKEL-CADMIUM BATTERY.	EXITRONIX TR-W9-BR-CL	MVOLT	INCLUDED
EM2	WALL MOUNTED EGRESS LIGHT FIXTURE WITH TWO 50W HALOGEN HEADS, MOUNT AT +16'-0" AFF UNLESS NOTED OTHERWISE.	LITHONIA IND12100-H5012S	MVOLT	INCLUDED
H	INDUSTRIAL HIGH BAY WITH CLEAR ACYLIC LENS. CHAIN MOUNTED AT +20'-0" AFF.	LITHONIA FOB14-454T5HO-T1X20-ACL-MVOLT-2/2-GEB-HBBS36	120	(4) F54T5HO/835/ECO
L2	2X4 LENSED TROFFER WITH PRISMATIC ACRYLIC LENS AND ELECTRONIC BALLAST.	LITHONIA 2SP8-G-232-FN-A12125-MVOLT-GEB10RS	120	(2) F032/835/ECO 3100 LUMEN
L2E	2X4 LENSED TROFFER WITH PRISMATIC ACRYLIC LENS AND ELECTRONIC BALLAST. PROVIDE WITH 1400 LUMEN EMERGENCY BATTERY PACK.	LITHONIA 2SP8-G-232-FN-A12125-MVOLT-GEB10RS-EL	120	(2) F032/835/ECO 3100 LUMEN
X1	SINGLE FACED LED EXIT SIGN WITH DIE-CAST ALUMINUM CONSTRUCTION AND GREEN LETTERING COLOR. EQUIP WITH NICKEL-CADMIUM BATTERY BACK-UP.	LITHONIA LQC-1-G-EL N	MVOLT	INCLUDED

LIGHT FIXTURE ABBREVIATION SCHEDULE

NOTE: NOT ALL ABBREVIATIONS WILL NECESSARILY BE USED.

A.F.F.	ABOVE FINISH FLOOR
WALL@CLG	WALL MOUNT AT CORNER OF WALL AND CEILING
CCBA	CUSTOM PAINTED COLOR AS SELECTED BY THE ARCHITECT
SCBA	STANDARD PAINTED COLOR AS SELECTED BY THE ARCHITECT
CFBA	CUSTOM FINISH AS SELECTED BY THE ARCHITECT
SFBA	STANDARD FINISH AS SELECTED BY THE ARCHITECT
MOD	MODIFY STANDARD LIGHT FIXTURE AS INDICATED

LIGHT FIXTURE GENERAL NOTES

1. REFER TO THE ARCHITECTURAL REFLECTED CEILING PLANS FOR LOCATIONS OF LIGHT FIXTURES. BRING ALL DISCREPANCIES OF LOCATIONS AND QUANTITIES TO THE ATTENTION OF THE ARCHITECT AND ELECTRICAL ENGINEER PRIOR TO BIDDING.
2. REFER TO ARCHITECTURAL ELEVATIONS FOR MOUNTING HEIGHTS AND LOCATIONS OF LIGHT FIXTURES. BRING ALL DISCREPANCIES TO THE ATTENTION OF THE ARCHITECT PRIOR TO BIDDING.
3. REFER TO THE SPECIFICATIONS FOR OTHER LIGHT FIXTURE, FUSING, BALLAST, AND LAMP REQUIREMENTS AND ACCEPTABLE MANUFACTURERS.
4. REFER TO ARCHITECTURAL DRAWINGS AND SPECIFICATIONS FOR LOUVER REQUIREMENTS AS REQUIRED.
5. CONFIRM AVAILABLE MOUNTING DEPTHS OF ALL LIGHT FIXTURES AND COMPARE WITH DEPTHS SHOWN ON SHOP DRAWINGS. BRING ALL POTENTIAL CONFLICT AREAS TO THE ATTENTION OF THE ARCHITECT AND ELECTRICAL ENGINEER PRIOR TO RELEASE.

BIDDING REQUIREMENTS

1. BID ONLY PRODUCTS THAT ARE SPECIFIED OR APPROVED BY ADDENDUM.
2. PACKAGING OF LIGHT FIXTURES WITH OTHER SYSTEMS IS NOT ALLOWED.
3. WHEN ONLY ONE PRODUCT IS APPROVED FOR BIDDING, THE PRICE FOR THAT ITEM SHALL BE BROKEN OUT SEPARATELY WHEN SUBMITTING PRICING TO VARIOUS DISTRIBUTORS AND/OR CONTRACTORS.
4. WHEN A CONTRADICTION EXISTS BETWEEN A SPECIFIC MODEL NUMBER AND THE DESCRIPTION, THE DESCRIPTION SHALL GOVERN.

PRIOR APPROVAL REQUIREMENTS

1. PRIOR APPROVAL IS REQUIRED BEFORE BIDDING THIS PROJECT.
2. PRIOR APPROVALS SHALL BE SUBMITTED TO THE ELECTRICAL ENGINEER'S OFFICE AT LEAST (8) EIGHT WORKING DAYS BEFORE THE BID. PRIOR APPROVALS RECEIVED AFTER THIS TIME PERIOD SHALL BE REJECTED.
3. PRIOR APPROVALS SHALL BE SIGNED BY A PRINCIPAL OF THE SUBMITTING ORGANIZATION STATING THAT THEY HAVE PREPARED AND/OR REVIEWED THE SUBMITTAL AND THAT THE PRODUCTS PROPOSED ARE EQUIVALENT TO THOSE SPECIFIED. ANY EXCEPTIONS SHALL BE SO NOTED.
4. ITEMS THAT ARE SUBMITTED AND HAVE BEEN APPROVED WILL BE LISTED IN THE ADDENDUM(S). VERBAL APPROVAL WILL NOT BE GIVEN ON ANY ITEM.
5. IT IS NOT THE RESPONSIBILITY OF THE ELECTRICAL ENGINEER TO NOTIFY THE SUBMITTING PARTY OF ERRORS IN THE SUBMITTAL. NOTIFICATION OF ERRORS BY THE ELECTRICAL ENGINEER PRIOR TO ISSUANCE OF THE ADDENDUM(S) MAY NOT BE GIVEN.
6. PRIOR APPROVALS SHALL CONSIST OF TWO SETS OF CUT SHEETS DESCRIBING THE PRODUCTS BEING SUBMITTED AS EQUIVALENTS. FAXES ARE NOT ACCEPTABLE. ALL SPECIFICATION INFORMATION SHALL BE CLEARLY MARKED, WITH NON-APPLICABLE INFORMATION CROSSED OUT. COMPLETE PHOTOMETRIC DATA SHALL BE PROVIDED. PRODUCTS WITHOUT PHOTOMETRIC DATA WILL NOT BE APPROVED.
7. SUPPLY POINT-BY-POINTS AS REQUIRED BY THE ELECTRICAL ENGINEER AND/OR LIGHTING DESIGNER.
8. SAMPLE FIXTURES MUST BE SUPPLIED WITH A CORD, PLUG AND 120V BALLAST.

LIGHTING SHOP DRAWING REQUIREMENTS

1. REFER TO SPECIFICATIONS 16001, 16510 & 16551.
2. MUST INCLUDE BALLAST AND LAMP CUT SHEETS.
3. LINEAR LIGHTING MUST INCLUDE DETAILED DRAWINGS WITH SUPPORT DETAILS, STEM LOCATIONS AND HAVE ALL LENGTHS IDENTIFIED WITH STEM LOCATIONS.
4. COLOR SAMPLES MUST BE INCLUDED IN FIRST SUBMITTAL.
5. CUT SHEETS MUST BE STAMPED WITH THE FACTORY REPRESENTATIVE'S COMPANY NAME.
6. VALUE ENGINEERING CONDUCTED WITHOUT THE DESIGN TEAM IE; ARCHITECT, OWNER, ENGINEER & LIGHTING CONSULTANT/DESIGNER WILL NOT BE ALLOWED, REVIEWED OR APPROVED.
7. PROVIDE A LIST OF SPARE PARTS, EQUIPMENT & LAMPS.

DIVISION OF FACILITIES CONSTRUCTION AND MANAGEMENT
REVIEWED FOR CODE COMPLIANCE
SIGNATURE: FC
DATE: 4-23-13

HFSArchitects
ARCHITECTURE
INTERIORS
PLANNING
1484 South State Street
Salt Lake City, Utah 84101
801-596-0691/F: 596-0693
www.hfsa.com

CONSULTANT
BNA CONSULTING
SALT LAKE ST.GEORGE
635 South State Street
Salt Lake City, Utah 84111
P:801.532.2196
F:801.532.2305
www.bnaconsulting.com

© 2008 BNACONSULTING

LICENSED PROFESSIONAL ENGINEER No. 4816 GARY W. MESSKER STATE OF UTAH

MOUNTAINLAND APPLIED TECHNOLOGY COLLEGE PHASE TWO
GENEVA BUILDING REMODEL
1410 BUSINESS PARK DRIVE
OREM, UTAH 84058

MARK	DATE	DESCRIPTION

DATE:	APRIL 19, 2013
AGENCY PROJECT NO:	09163260
HFSA PROJECT NO:	1204.01
CAD DWG FILE NO:	
DRAWN BY:	BNA
CHECKED BY:	RLW
DESIGNED BY:	RLW
DWG TYPE:	ELECTRICAL
ARCHITECTURAL PHASE:	CONSTRUCTION BID DOCUMENTS

SHEET TITLE
LIGHT FIXTURE SCHEDULE

EG002
SHEET OF

By: cchrin Apr 19, 2013 - 9:01am
J:\2012\030A\DRAW\PHASE 2\e030A-EG002.dwg

GENERAL NOTES

1. REFER TO MECHANICAL DEMOLITION DRAWING FOR ADDITIONAL WORK REQUIRED. REMOVE ELECTRICAL SERVICE TO ALL EQUIPMENT NOTED TO BE REMOVED.

SHEET KEYNOTES

1. NOT USED.
2. REMOVE ALL LIGHT FIXTURES, WIRING DEVICES, TELECOMMUNICATION DEVICES, FIRE ALARM DEVICES, ETC. FROM THIS SPACE UNLESS NOTED OTHERWISE.
3. DISCONNECT ELECTRICAL SERVICE TO SWAMP COOLER BEING RELOCATED. EXISTING STARTERS AND DISCONNECTS TO BE REUSED AT NEW LOCATION. SEE POWER PLAN FOR NEW LOCATION AND NEW CIRCUITING.
4. DISCONNECT ELECTRICAL SERVICE TO RADIANT HEATER BEING RELOCATED. EXISTING MANUAL STARTER TO BE REUSED AT NEW LOCATION. SEE POWER PLAN FOR NEW LOCATION AND NEW CIRCUITING.

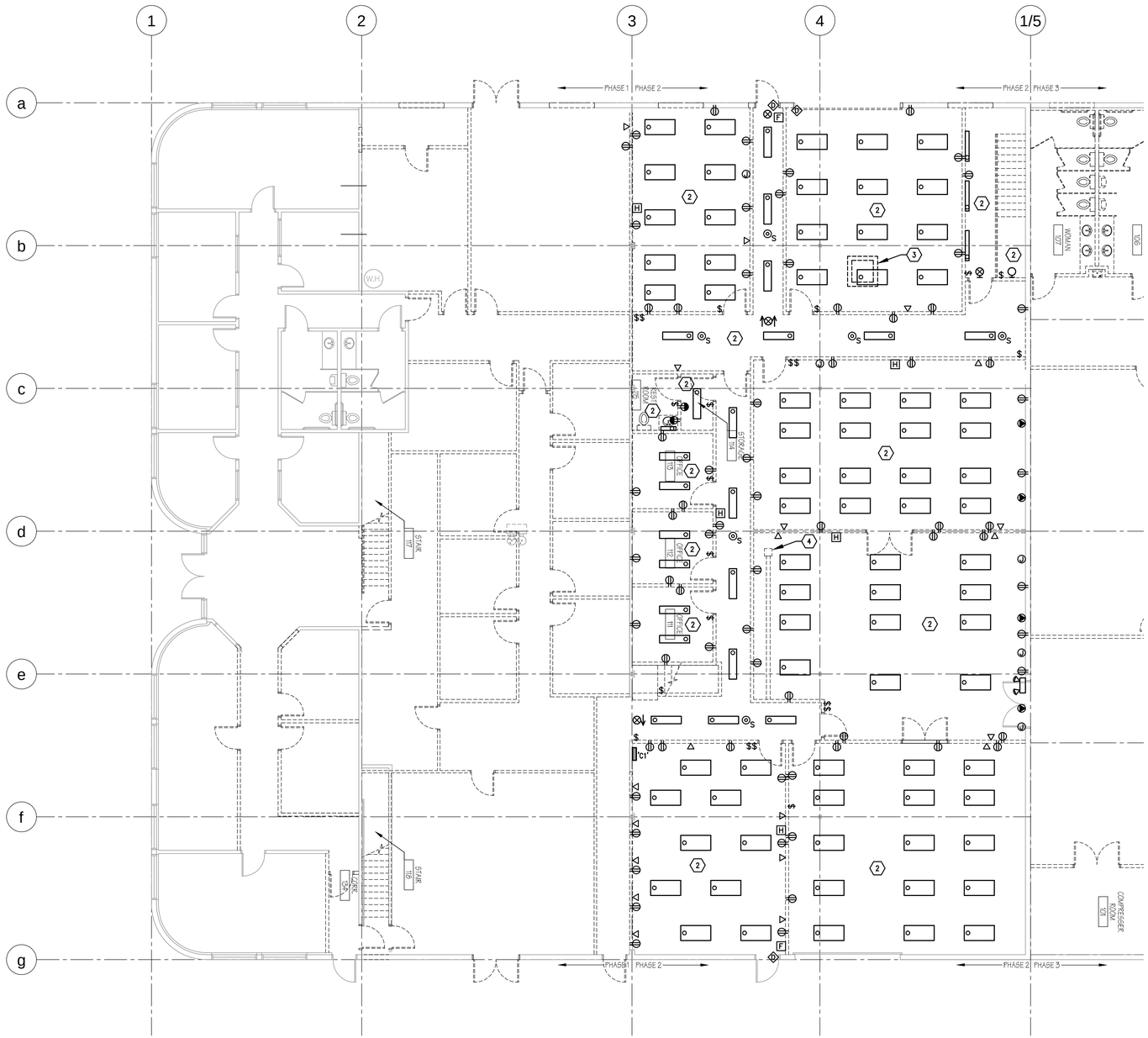

PLAN NORTH

ELECTRICAL DEMOLITION PLAN – MAIN FLOOR AREA A

1/8" = 1'-0"

0 4' 8' 16'

DIVISION OF FACILITIES CONSTRUCTION AND MANAGEMENT
REVIEWED FOR CODE COMPLIANCE
SIGNATURE: FC
DATE: 4-23-13

HFSArchitects
ARCHITECTURE
INTERIORS
PLANNING
1484 South State Street
Salt Lake City, Utah 84101
801-596-0691/F: 596-0693
www.hfsa.com

CONSULTANT
BNA CONSULTING
SALT LAKE ST.GEORGE
635 South State Street
Salt Lake City, Utah 84111
P:801.532.2196
F:801.532.2305
www.bnaconsulting.com

© 2008 BNACONSULTING

LICENSED PROFESSIONAL ENGINEER No. 4816 GARY W. MESSER STATE OF UTAH

MOUNTAINLAND APPLIED TECHNOLOGY COLLEGE PHASE TWO

GENEVA BUILDING REMODEL
1410 BUSINESS PARK DRIVE
OREM, UTAH 84058

MARK	DATE	DESCRIPTION

DATE:	APRIL 19, 2013
AGENCY PROJECT NO:	09163260
HFSA PROJECT NO:	1204.01
CAD DWG FILE NO:	
DRAWN BY:	BNA
CHECKED BY:	RLW
DESIGNED BY:	RLW
DWG TYPE:	ELECTRICAL
ARCHITECTURAL PHASE:	CONSTRUCTION BID DOCUMENTS

SHEET TITLE

ELECTRICAL DEMOLITION PLAN - MAIN FLOOR AREA A

ED101A

SHEET OF

By: calvin Apr 19, 2013 – 9:01am
J:\2012\030A\DRAW\PHASE 2\c030A-ED101A.dwg

GENERAL NOTES

1. REFER TO MECHANICAL DEMOLITION DRAWING FOR ADDITIONAL WORK REQUIRED. REMOVE ELECTRICAL SERVICE TO ALL EQUIPMENT NOTED TO BE REMOVED.

SHEET KEYNOTES

1. NOT USED.
2. REMOVE ALL LIGHTS, WIRING DEVICES, TELECOMMUNICATION DEVICES, FIRE ALARM DEVICES, ETC FROM THIS SPACE UNLESS NOTED OTHERWISE.
3. REMOVE EXISTING LIGHT FIXTURE.
4. REMOVE EXISTING FIRE ALARM SYSTEM SMOKE DETECTOR.
5. NOT USED.
6. EXISTING DEVICE TO BE REMOVED.

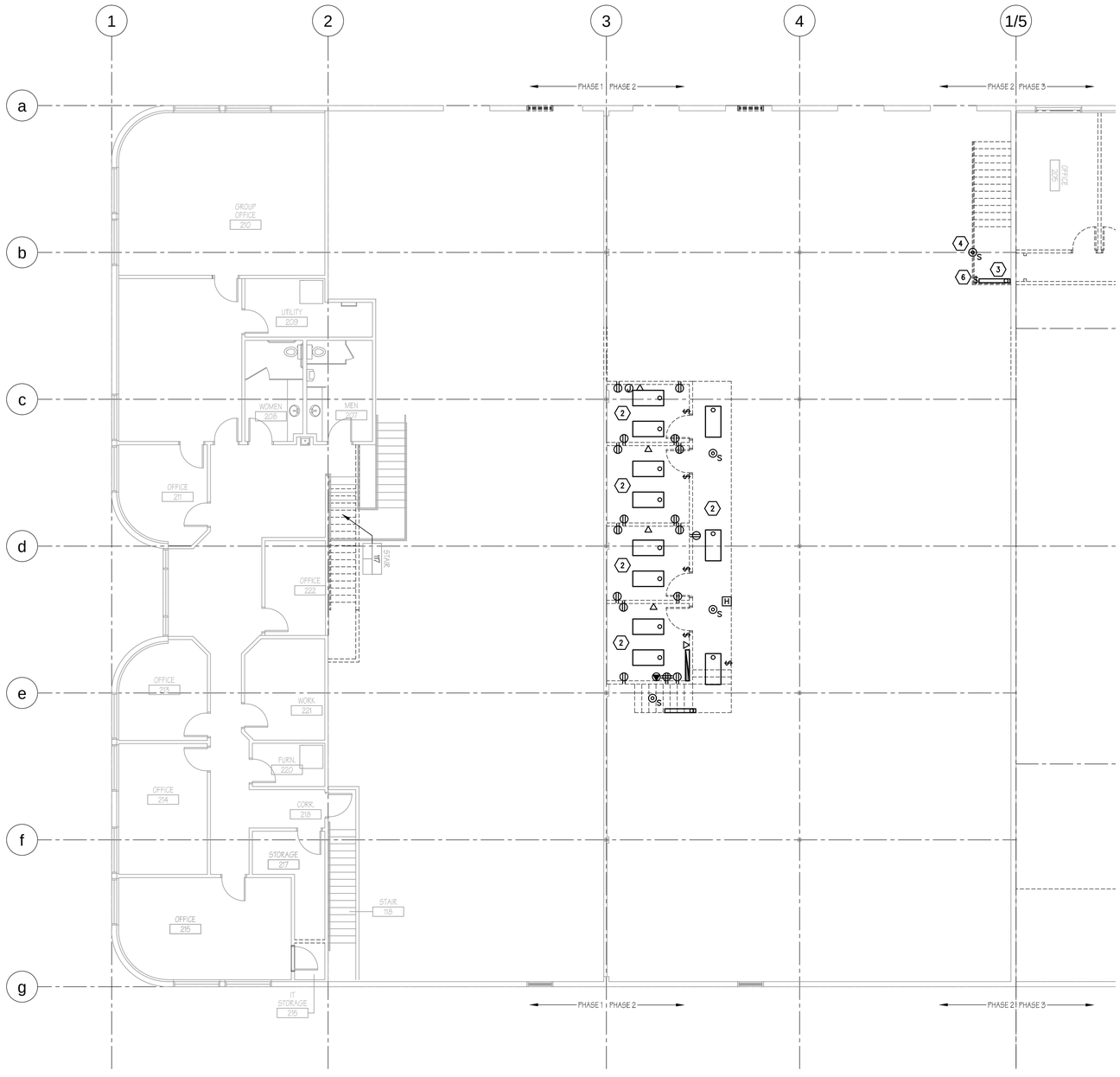

PLAN NORTH

ELECTRICAL DEMOLITION PLAN – UPPER FLOOR AREA A

1/8" = 1'-0"

0 4' 8' 16'

REVIEWED FOR CODE COMPLIANCE
DIVISION OF FACILITIES CONSTRUCTION AND MANAGEMENT
SIGNATURE: FC
DATE: 4-23-13

HFSArchitects
ARCHITECTURE
INTERIORS
PLANNING
1484 South State Street
Salt Lake City, Utah 84101
801-596-0691/F: 596-0693
www.hfsa.com

CONSULTANT
BNA CONSULTING
SALT LAKE ST.GEORGE
635 South State Street
Salt Lake City, Utah 84111
P:801.532.2196
F:801.532.2305
www.bnaconsulting.com

© 2008 BNACONSULTING

LICENSED PROFESSIONAL ENGINEER
No. 4816
GARY W. MESSER
STATE OF UTAH

MOUNTAINLAND APPLIED TECHNOLOGY COLLEGE PHASE TWO

GENEVA BUILDING REMODEL
1410 BUSINESS PARK DRIVE
OREM, UTAH 84058

MARK	DATE	DESCRIPTION

DATE:	APRIL 19, 2013
AGENCY PROJECT NO:	09163260
HFSA PROJECT NO:	1204.01
CAD DWG FILE NO:	
DRAWN BY:	BNA
CHECKED BY:	RLW
DESIGNED BY:	RLW
DWG TYPE:	ELECTRICAL
ARCHITECTURAL PHASE:	CONSTRUCTION BID DOCUMENTS

SHEET TITLE

ELECTRICAL DEMOLITION PLAN - UPPER FLOOR AREA A

ED102A

SHEET OF

By: calvin; Apr 19, 2013 — 9:01am
J:\2012\030A\DRAW\PHASE 2\cd30A-ED102A.dwg

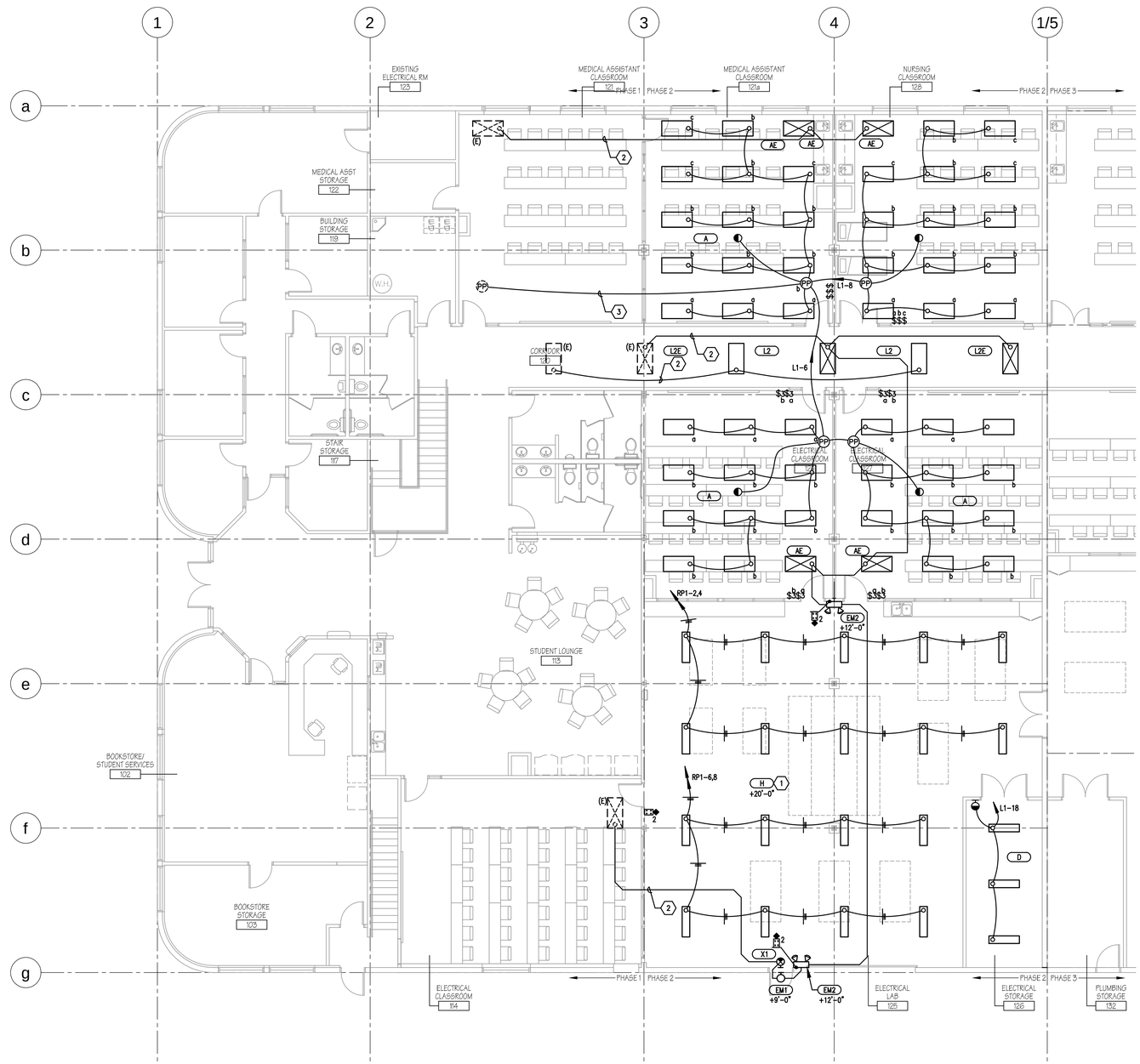

PLAN NORTH

LIGHTING PLAN – MAIN FLOOR AREA A

1/8" = 1'-0"

0 4' 8' 16'

SHEET GENERAL NOTES

1. THE ELECTRICAL CONTRACTOR SHALL BE RESPONSIBLE FOR CONTACTING THE SENSOR MANUFACTURER FOR PROPER PLACEMENT AND ADJUSTMENT OF OCCUPANCY SENSORS.
2. EACH ZONE SHALL HAVE COVERAGE BY OCCUPANCY SENSOR SUCH THAT NO BLIND SPOT EXIST.
3. UPON COMPLETION OF THE INSTALLATION, THE SYSTEM SHALL BE COMPLETELY COMMISSIONED BY THE MANUFACTURER'S FACTORY AUTHORIZED TECHNICIAN WHO WILL VERIFY ALL ADJUSTMENTS AND SENSOR PLACEMENT TO ENSURE A TROUBLE FREE INSTALLATION.
4. THE LOCATION AND QUANTITIES OF SENSORS SHOWN ON THE DRAWINGS ARE DIAGRAMMATIC AND INDICATE ONLY THE ROOMS WHICH ARE TO BE PROVIDED WITH SENSORS. THE ELECTRICAL CONTRACTOR SHALL PROVIDE ADDITIONAL SENSORS IF REQUIRED TO PROPERLY COVER THE RESPECTIVE ROOM.
5. PROVIDE OCCUPANCY SENSOR WITH AN ADDITIONAL SET OF DRY CONTACTS FOR HVAC CONTROL AT EACH VAV BOX LOCATION. COORDINATE WITH MECHANICAL DRAWINGS AND THE MECHANICAL CONTRACTOR FOR EXACT LOCATIONS.

SHEET KEYNOTES

1. WIRE LIGHTS FOR DUAL LEVEL SWITCHING.
2. WIRE 2 #12 & #12 GND AND CIRCUIT TO EXISTING LIGHTING CIRCUIT.
3. WIRE 6 #12 AND 3 #12 GND AND CIRCUIT TO EXISTING LIGHTING CIRCUITS.

DIVISION OF FACILITIES CONSTRUCTION AND MANAGEMENT
REVIEWED FOR CODE COMPLIANCE
SIGNATURE: FC
DATE: 4-23-13

HFSArchitects
ARCHITECTURE
INTERIORS
PLANNING
1484 South State Street
Salt Lake City, Utah 84101
801-596-0691/F: 596-0693
www.hfsa.com

CONSULTANT
BNA CONSULTING
SALT LAKE ST.GEORGE
635 South State Street
Salt Lake City, Utah 84111
P:801.532.2196
F:801.532.2305
www.bnaconsulting.com

© 2008 BNACONSULTING

LICENSED PROFESSIONAL ENGINEER No. 4816 GARY W. MESKER STATE OF UTAH

MOUNTAINLAND APPLIED TECHNOLOGY COLLEGE PHASE TWO

GENEVA BUILDING REMODEL
1410 BUSINESS PARK DRIVE
OREM, UTAH 84058

MARK	DATE	DESCRIPTION

DATE:	APRIL 19, 2013
AGENCY PROJECT NO:	09163260
HFSA PROJECT NO:	1204.01
CAD DWG FILE NO:	
DRAWN BY:	BNA
CHECKED BY:	RLW
DESIGNED BY:	RLW
DWG TYPE:	ELECTRICAL
ARCHITECTURAL PHASE:	CONSTRUCTION BID DOCUMENTS

SHEET TITLE

LIGHTING PLAN - MAIN FLOOR AREA A

EL101

SHEET OF

By: calvin; Apr 19, 2013 – 9:01am
J:\2012\030A\DRAW\PHASE 2\e030A-EL101.dwg

SHEET KEYNOTES

1. EXISTING PANEL.
2. ENSURE THAT NO ELECTRICAL EQUIPMENT ARE LOCATED SUCH THAT THEY INTERFERE WITH WHITE BOARD.
3. JUNCTION BOX WITH 1-1/2" CONDUIT TO OVERHEAD PROJECTOR.
4. JUNCTION BOX FOR OVERHEAD PROJECTOR.
5. MOUNT JUNCTION BOX AT +60" AFF.
6. RETRACTABLE CORD REEL WITH WOODHEAD NEOTEX BOX WITH FOUR (4) 20-AMP DUPLEX RECEPTACLES. SEE DIAGRAM K003/EX202.
7. FOURPLEX RECEPTACLE TO BE MOUNTED IN OWNER FURNISHED MILL WORK. COORDINATE ALL WORK WITH OWNER PRIOR TO ROUGH-IN.
8. 18"x4" CABLE TRAY RUN 2'-0" ABOVE CEILING LINE. PROVIDED UNDER PREVIOUS PHASE.
9. 12"x4" CABLE TRAY RUN 2'-0" ABOVE CEILING LINE. PROVIDED UNDER PREVIOUS PHASE.
10. RELOCATED RADIANT HEATER.

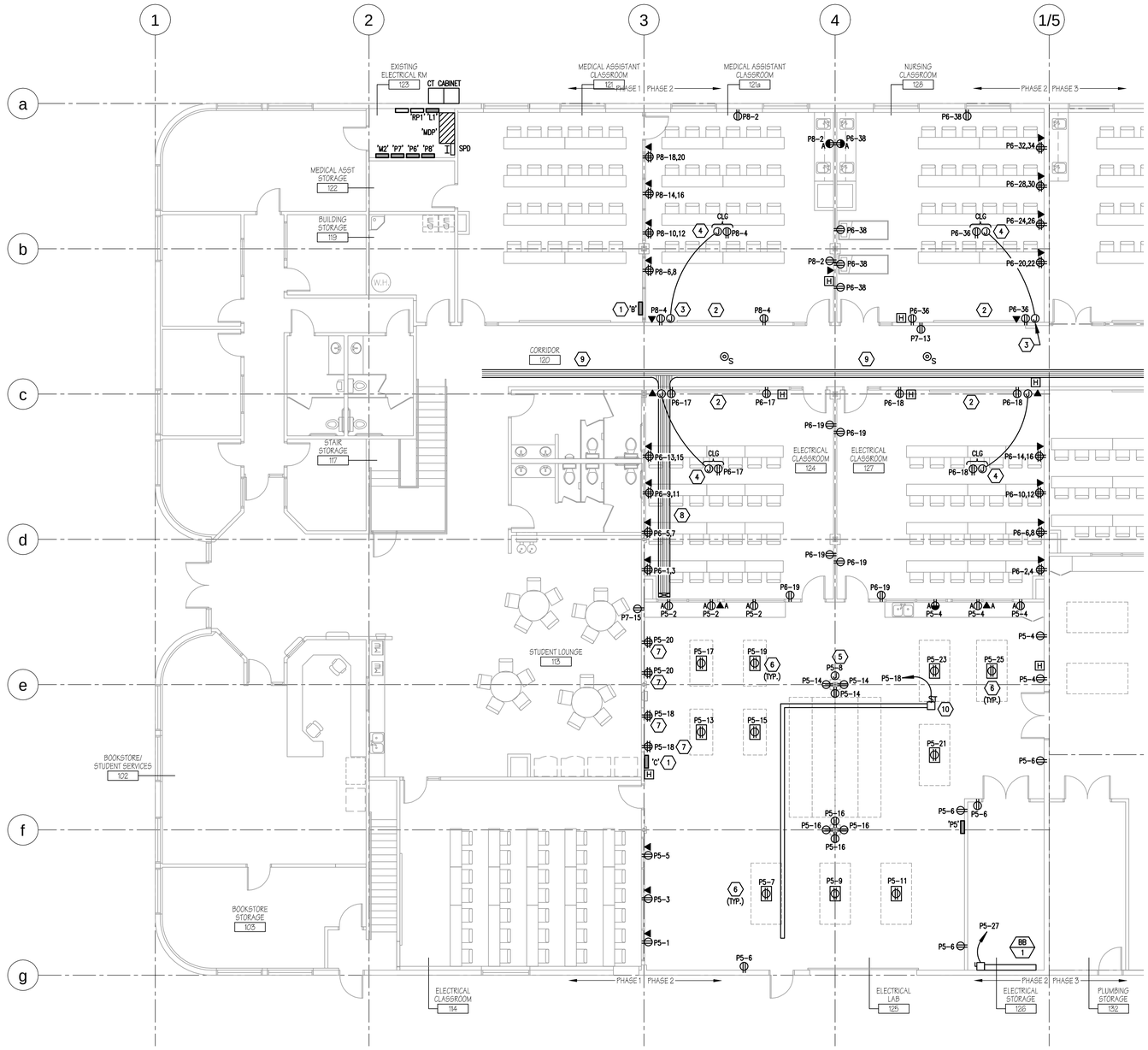

PLAN NORTH

POWER PLAN – MAIN FLOOR AREA A

1/8" = 1'-0"

0 4' 8' 16'

REVIEWED FOR CODE COMPLIANCE
DIVISION OF FACILITIES CONSTRUCTION AND MANAGEMENT
SIGNATURE: FC
DATE: 4-23-13

HFSArchitects
ARCHITECTURE
INTERIORS
PLANNING
1484 South State Street
Salt Lake City, Utah 84101
801-596-0691/F: 596-0693
www.hfsa.com

CONSULTANT
BNA CONSULTING
SALT LAKE ST.GEORGE
635 South State Street
Salt Lake City, Utah 84111
P:801.532.2196
F:801.532.2305
www.bnaconsulting.com

© 2008 BNACONSULTING

LICENSED PROFESSIONAL ENGINEER No. 4816 GARY W. MESKER STATE OF UTAH

MOUNTAINLAND APPLIED TECHNOLOGY COLLEGE PHASE TWO

GENEVA BUILDING REMODEL
1410 BUSINESS PARK DRIVE
OREM, UTAH 84058

MARK	DATE	DESCRIPTION

DATE:	APRIL 19, 2013
AGENCY PROJECT NO:	09163260
HFSA PROJECT NO:	1204.01
CAD DWG FILE NO:	
DRAWN BY:	BNA
CHECKED BY:	RLW
DESIGNED BY:	RLW
DWG TYPE:	ELECTRICAL
ARCHITECTURAL PHASE:	CONSTRUCTION BID DOCUMENTS

SHEET TITLE

POWER PLAN - MAIN FLOOR AREA A

EP101

SHEET OF

By: cshrin Apr 19, 2013 – 9:01am
J:\2012\030A\DRAW\PHASE 2\e030A-EP101.dwg

SHEET KEYNOTES

1. 18"x4" CABLE TRAY RUN 2'-0" BELOW STRUCTURE. PROVIDED UNDER PREVIOUS PHASE.

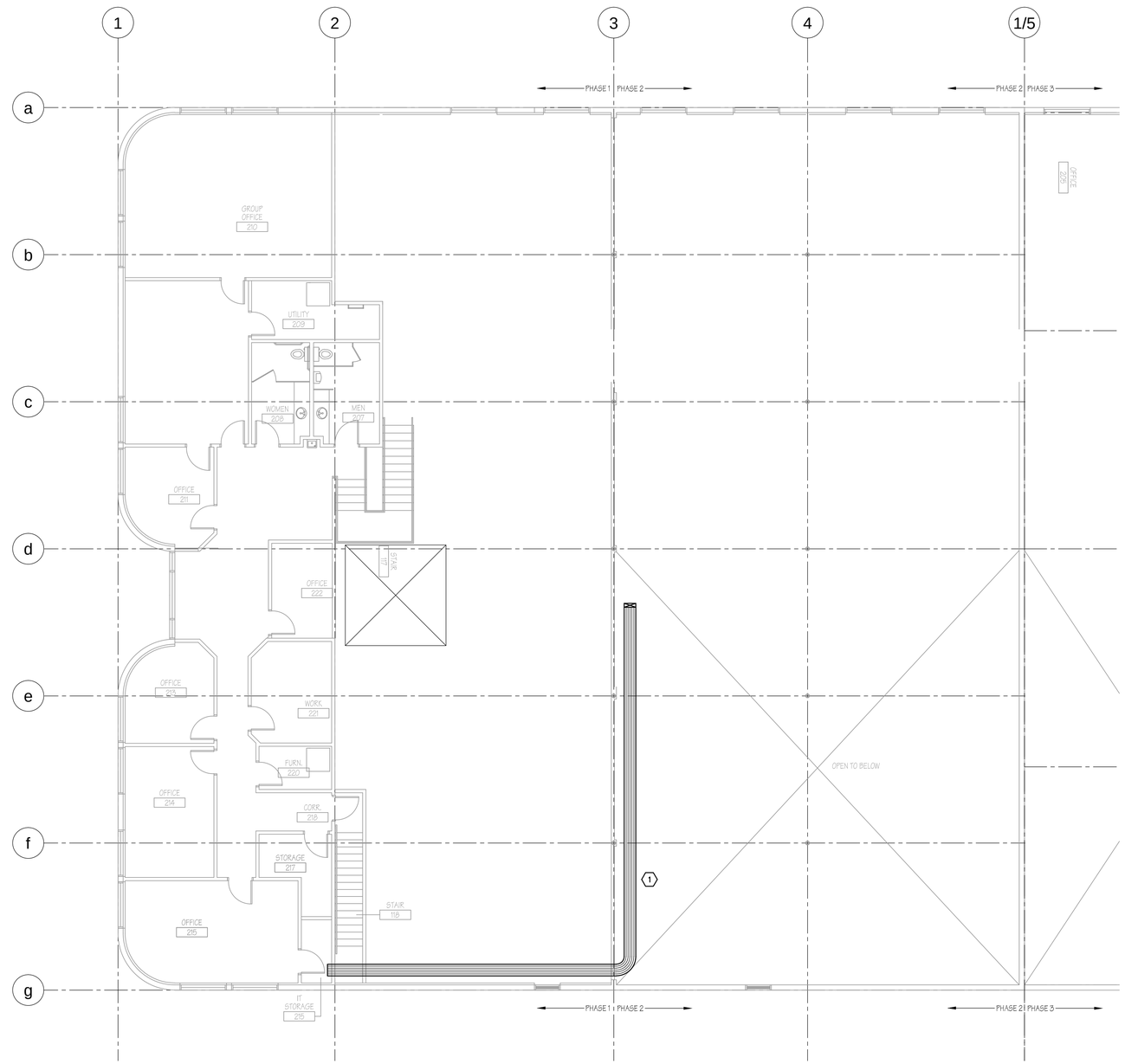

PLAN NORTH

POWER PLAN – UPPER FLOOR
1/8" = 1'-0"

0 4' 8' 16'

DIVISION OF FACILITIES CONSTRUCTION AND MANAGEMENT
REVIEWED FOR CODE COMPLIANCE
SIGNATURE: FC
DATE: 4-23-13

HFSArchitects
ARCHITECTURE
INTERIORS
PLANNING

1484 South State Street
Salt Lake City, Utah 84101
801-596-0691/F: 596-0693
www.hfsa.com

CONSULTANT

BNA CONSULTING
SALT LAKE ST.GEORGE

635 South State Street
Salt Lake City, Utah 84111
P:801.532.2196
F:801.532.2305
www.bnaconsulting.com

© 2008 BNACONSULTING

LICENSED PROFESSIONAL ENGINEER
No. 4816
GARY W. MESSER
STATE OF UTAH

MOUNTAINLAND APPLIED TECHNOLOGY COLLEGE PHASE TWO

GENEVA BUILDING REMODEL
1410 BUSINESS PARK DRIVE
OREM, UTAH 84058

MARK	DATE	DESCRIPTION

DATE:	APRIL 19, 2013
AGENCY PROJECT NO:	09163260
HFSA PROJECT NO:	1204.01
CAD DWG FILE NO:	
DRAWN BY:	BNA
CHECKED BY:	RLW
DESIGNED BY:	RLW
DWG TYPE:	ELECTRICAL
ARCHITECTURAL PHASE:	CONSTRUCTION BID DOCUMENTS

SHEET TITLE

POWER PLAN - UPPER FLOOR

EP102

SHEET OF

By: calvin: Apr 19, 2013 – 9:01am
J:\2012\030A\DRAW\PHASE 2\e030A-EP102.dwg

SHEET KEYNOTES

1. RELOCATED EXISTING EVAPORATIVE COOLER. REUSE EXISTING DISCONNECTS AND STARTERS. ALL CONTROLS PROVIDED BY MECHANICAL CONTRACTOR.

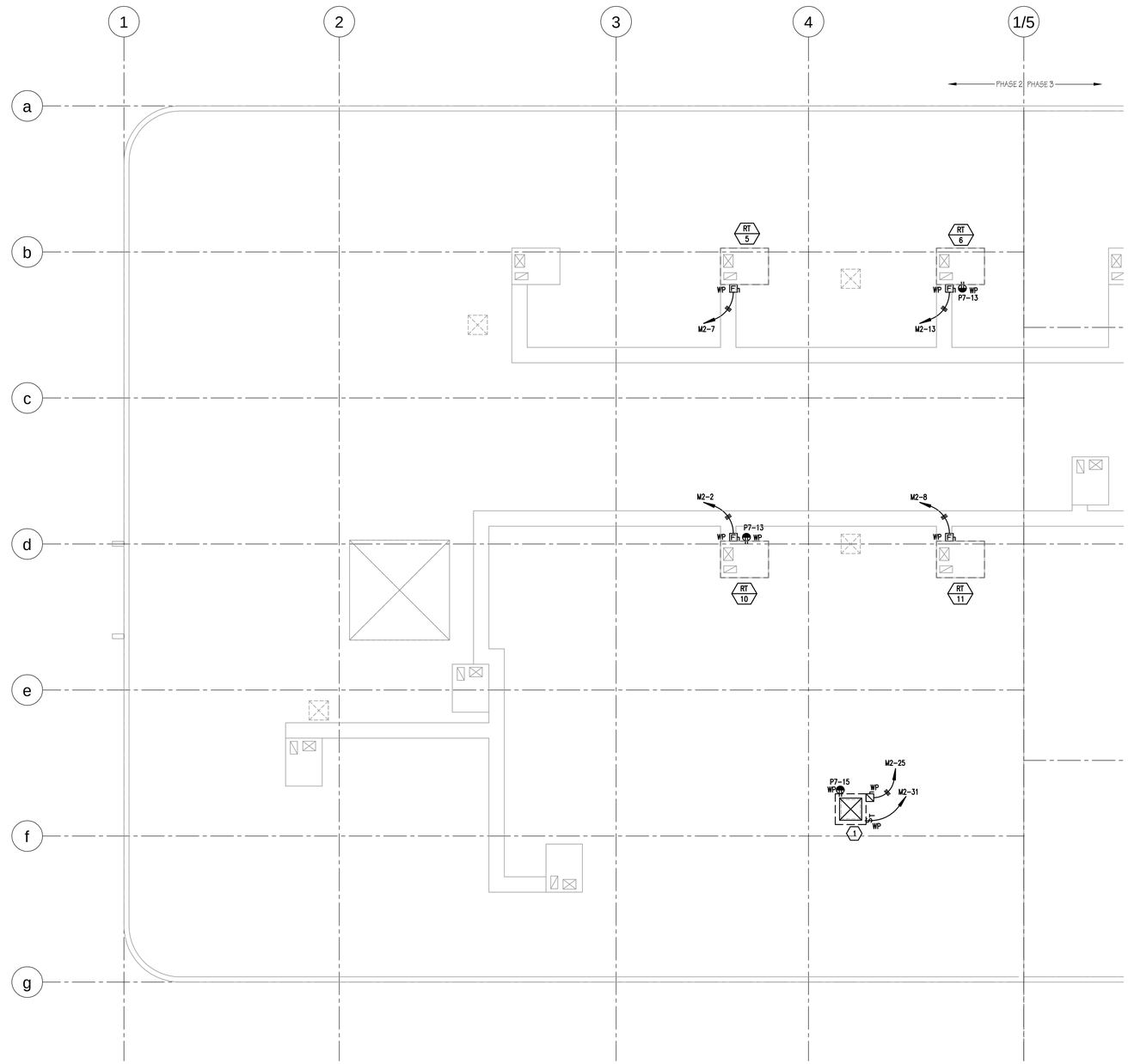

PLAN NORTH

POWER PLAN – ROOF
1/8" = 1'-0"

0 4' 8' 16'

DIVISION OF FACILITIES CONSTRUCTION AND MANAGEMENT
REVIEWED FOR CODE COMPLIANCE
SIGNATURE: FC
DATE: 4-23-13

HFSArchitects
ARCHITECTURE
INTERIORS
PLANNING

1484 South State Street
Salt Lake City, Utah 84101
801-596-0691/F: 596-0693
www.hfsa.com

CONSULTANT

BNA CONSULTING
SALT LAKE ST.GEORGE

635 South State Street
Salt Lake City, Utah 84111
P:801.532.2196
F:801.532.2305
www.bnaconsulting.com

© 2008 BNACONSULTING

LICENSED PROFESSIONAL ENGINEER
No. 4816
GARY W. MESKER
STATE OF UTAH

MOUNTAINLAND APPLIED TECHNOLOGY COLLEGE PHASE TWO

GENEVA BUILDING REMODEL
1410 BUSINESS PARK DRIVE
OREM, UTAH 84058

MARK	DATE	DESCRIPTION

DATE:	APRIL 19, 2013
AGENCY PROJECT NO:	09163260
HFSA PROJECT NO:	1204.01
CAD DWG FILE NO:	
DRAWN BY:	BNA
CHECKED BY:	RLW
DESIGNED BY:	RLW
DWG TYPE:	ELECTRICAL
ARCHITECTURAL PHASE:	CONSTRUCTION BID DOCUMENTS

SHEET TITLE

POWER PLAN - ROOF

EP103A

SHEET OF

By: calvin Apr 19, 2013 – 9:01am
J:\2012\030A\DRAW\PHASE 2\e030A-EP103A.dwg

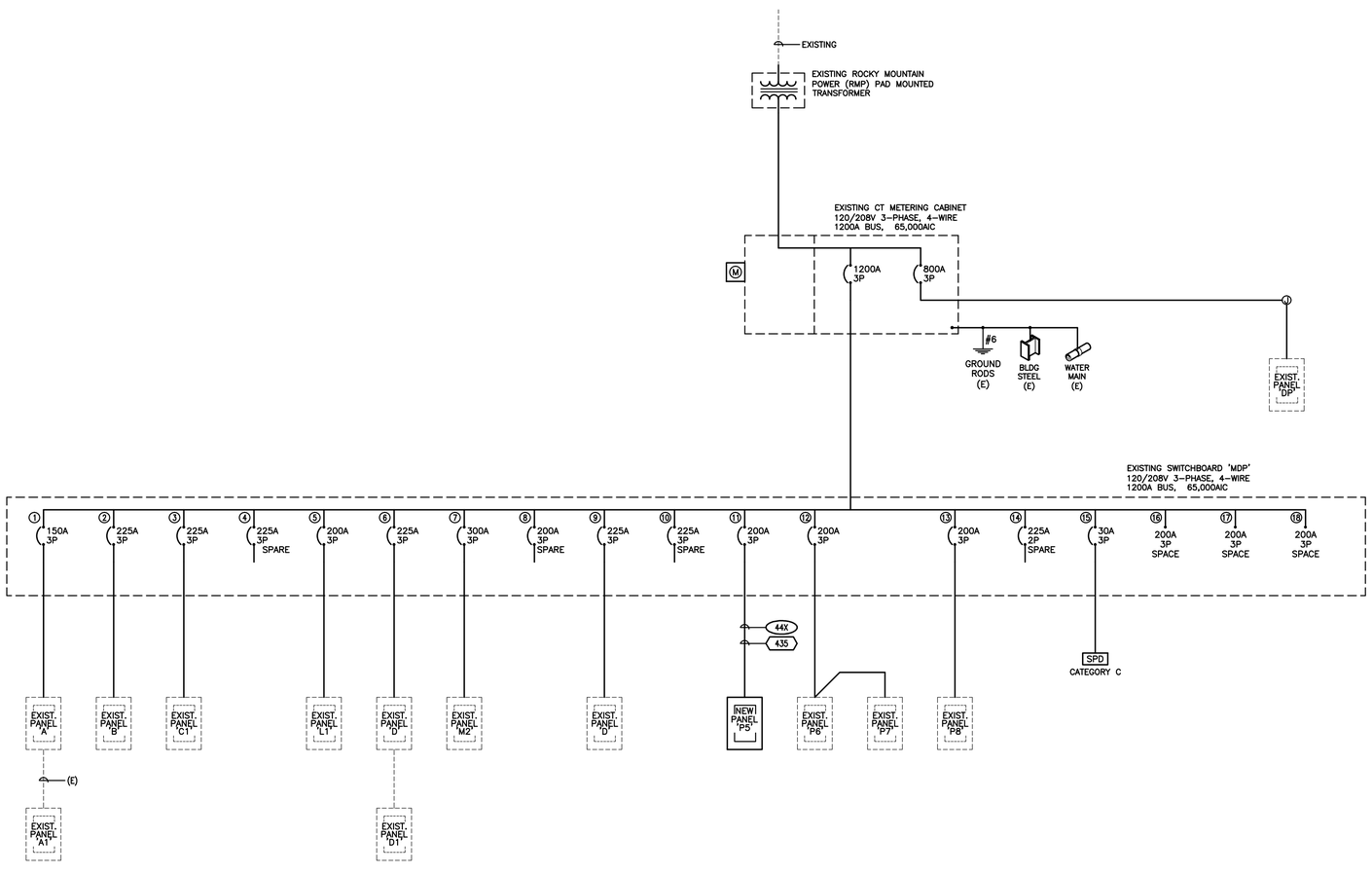

1 ONE-LINE DIAGRAM
NO SCALE

ALUMINUM CONDUCTOR & CONDUIT SCHEDULE

TYPE	AMP.	COND. SIZE	CONDUCTOR QUAN.	CONDUCTOR SIZE	INSUL-ATION	EQ. GND. COND.
31X	120	2"	3	1/0	XHHW-2	4
41X	120	2"	4	1/0	XHHW-2	4
51X	120	2"	5 *	1/0	XHHW-2	4
32X	135	2"	3	2/0	XHHW-2	4
42X	135	2"	4	2/0	XHHW-2	4
52X	135	2"	5 *	2/0	XHHW-2	4
33X	155	2"	3	3/0	XHHW-2	4
43X	155	2"	4	3/0	XHHW-2	4
53X	155	3"	5 *	3/0	XHHW-2	4
34X	180	2"	3	4/0	XHHW-2	4
44X	180	3"	4	4/0	XHHW-2	4
54X	180	3"	5 *	4/0	XHHW-2	2
325	205	2"	3	250	XHHW-2	2
425	205	3"	4	250	XHHW-2	2
525	205	3"	5 *	250	XHHW-2	2
335	250	3"	3	350	XHHW-2	2
435	250	3"	4	350	XHHW-2	2
535	250	3"	5 *	350	XHHW-2	2
350	310	4"	3	500	XHHW-2	1
450	310	4"	4	500	XHHW-2	1
375	385	4"	3	750	XHHW-2	1
475	385	4"	4	750	XHHW-2	1

ALUMINUM CONDUCTOR & CONDUIT SCHEDULE FOR PARALLEL RUNS

TYPE	MAX. O.C. PROT.	COND. AMPS	SETS	CONDUCTOR QUAN.	CONDUCTOR SIZE	CONDUIT SIZE	EQ. GND. COND.
325-2	400	410	2	3	250	4"	2/0
425-2	400	410	2	4	250	4"	2/0
525-2	400	410	2	5 *	250	4"	2/0
350-2	600	620	2	3	500	4"	2/0
450-2	600	620	2	4	500	4"	2/0
550-2	600	620	2	5 *	500	4"	2/0
375-2	800	770	2	3	750	4"	3/0
475-2	800	770	2	4	750	4"	3/0
575-2	800	770	2	5 *	750	4"	3/0
375-3	1000	1150	3	3	750	4"	4/0
475-3	1000	1150	3	4	750	4"	4/0
575-3	1000	1150	3	5 *	750	4"	4/0
350-4	1200	1240	4	3	500	4"	250
450-4	1200	1240	4	4	500	4"	250
350-6	1600	1860	6	3	500	4"	350
375-5	1600	1925	5	3	750	4"	350
475-5	1600	1925	5	4	750	4"	350
375-6	2000	2310	6	3	750	4"	500
475-6	2000	2310	6	4	750	4"	500
375-7	2500	2695	7	3	750	5"	750
475-7	2500	2695	7	4	750	5"	750
375-8	3000	3080	8	3	750	5"	750
475-8	3000	3080	8	4	750	5"	750

NOTES
IN PARALLEL RUNS SIZE GND. COND. IN ACCORDANCE WITH NEC PARA. 250-122.

GND. CONDUCTOR MAY BE DELETED ON SERVICE ENTRANCE CONDUCTORS

* 200% NEUTRAL

PROVIDE COMPACT STRANDED ALUMINUM ASSOCIATION 8000 SERIES ALLOY CONDUCTORS.

PROVIDE TERMINATION FOR ALUMINUM-ALLOY CONDUCTORS OF HYDRAULIC COMPRESSION TYPE ONLY LISTED UNDER UL 486-B MARKED "AL7CU" FOR 75° RATED CIRCUITS.

PROVIDE ALL ELECTRICAL EQUIPMENT WITH PROPER SIZING TO ACCOMMODATE ALUMINUM CONDUCTORS, COORDINATE WITH EQUIPMENT SUPPLIER.

COPPER CONDUCTOR & CONDUIT SCHEDULE

TYPE	AMP.	COND. SIZE	CONDUCTOR QUAN.	CONDUCTOR SIZE	INSUL-ATION	EQ. GND. COND.
20	30	3/4"	2	10	THHN THWN	10
30	30	3/4"	3	10	THHN THWN	10
40	30	3/4"	4	10	THHN THWN	10
28	40	1"	2	8	THHN THWN	10
38	40	1"	3	8	THHN THWN	10
48	40	1"	4	8	THHN THWN	10
26	55	1"	2	6	THHN THWN	8
36	55	1"	3	6	THHN THWN	8
46	55	1"	4	6	THHN THWN	8
24	70	1"	2	4	THHN THWN	8
34	70	1-1/4"	3	4	THHN THWN	8
44	70	1-1/4"	4	4	THHN THWN	8
23	85	1-1/4"	2	3	THHN THWN	8
33	85	1-1/4"	3	3	THHN THWN	8
43	85	1-1/2"	4	3	THHN THWN	8
32	95	1-1/2"	3	2	THHN THWN	6
42	95	1-1/2"	4	2	THHN THWN	6
31	110	1-1/2"	3	1	THHN THWN	6
41	110	2"	4	1	THHN THWN	6
51	110	2"	5 *	1	THHN THWN	6
31X	150	2"	3	1/0	THHN THWN	6
41X	150	2"	4	1/0	THHN THWN	6
51X	150	2"	5 *	1/0	THHN THWN	6
32X	175	2"	3	2/0	THHN THWN	6
42X	175	2"	4	2/0	THHN THWN	6
52X	175	2"	5 *	2/0	THHN THWN	6
33X	200	2"	3	3/0	THHN THWN	6
43X	200	2"	4	3/0	THHN THWN	6
53X	200	3"	5 *	3/0	THHN THWN	6
34X	230	3"	3	4/0	THHN THWN	4
44X	230	3"	4	4/0	THHN THWN	4
54X	230	3"	5 *	4/0	THHN THWN	4
325	255	3"	3	250	THHN THWN	4
425	255	3"	4	250	THHN THWN	4
525	255	3"	5 *	250	THHN THWN	4
335	310	3"	3	350	THHN THWN	3
435	310	3"	4	350	THHN THWN	3
535	310	3"	5 *	350	THHN THWN	3
350	380	4"	3	500	XHHW	3
450	380	4"	4	500	XHHW	3
550	380	4"	5 *	500	XHHW	3

COPPER CONDUCTOR & CONDUIT SCHEDULE FOR PARALLEL RUNS

TYPE	MAX. O.C. PROT.	COND. AMPS	SETS	CONDUCTOR QUAN.	CONDUCTOR SIZE	CONDUIT SIZE	EQ. GND. COND.
325-2	600	510	2	3	250	3"	1
425-2	600	510	2	4	250	3"	1
525-2	600	510	2	5 *	250	3"	1
350-2	800	760	2	3	500	4"	1/0
450-2	800	760	2	4	500	4"	1/0
550-2	800	760	2	5 *	500	4"	1/0
340-3	1000	1140	3	3	500	4"	2/0
440-3	1000	1140	3	4	500	4"	2/0
540-3	1000	1140	3	5 *	500	4"	2/0
335-4	1200	1240	4	3	350	3"	3/0
435-4	1200	1240	4	4	350	3"	3/0
535-4	1200	1240	4	5 *	350	3"	3/0
350-5	1600	1900	5	3	500	4"	4/0
450-5	1600	1900	5	4	500	4"	4/0
550-5	1600	1900	5	5 *	500	4"	4/0
450-6	2000	2280	6	4	500	4"	250
450-7	2500	2665	7	4	500	4"	350
450-8	3000	3040	8	4	500	4"	400
475-8	3200	3200	8	4	750	4"	500
450-11	4000	4180	11	4	500	4"	500

NOTES
IN PARALLEL RUNS SIZE GND. COND. IN ACCORDANCE WITH NEC PARA. 250-122.

GND. CONDUCTOR MAY BE DELETED ON SERVICE ENTRANCE CONDUCTORS

* 200% NEUTRAL

REVIEWED FOR CODE COMPLIANCE
DIVISION OF FACILITIES CONSTRUCTION AND MANAGEMENT
SIGNATURE: FC
DATE: 4-23-13

HFSArchitects
ARCHITECTURE
INTERIORS
PLANNING
1484 South State Street
Salt Lake City, Utah 84101
801-596-0691/F: 596-0693
www.hfsa.com

CONSULTANT
BNA CONSULTING
SALT LAKE ST.GEORGE
635 South State Street
Salt Lake City, Utah 84111
P:801.532.2196
F:801.532.2305
www.bnaconsulting.com

© 2008 BNACONSULTING

LICENSED PROFESSIONAL ENGINEER
No. 4816
GARY W. MESSER
STATE OF UTAH

MOUNTAINLAND APPLIED TECHNOLOGY COLLEGE PHASE TWO

GENEVA BUILDING REMODEL
1410 BUSINESS PARK DRIVE
OREM, UTAH 84058

MARK	DATE	DESCRIPTION

DATE:	APRIL 19, 2013
AGENCY PROJECT NO:	09163260
HFSA PROJECT NO:	1204.01
CAD DWG FILE NO:	
DRAWN BY:	BNA
CHECKED BY:	RLW
DESIGNED BY:	RLW
DWG TYPE:	ELECTRICAL
ARCHITECTURAL PHASE:	CONSTRUCTION BID DOCUMENTS

SHEET TITLE
ONE-LINE DIAGRAM

EX101
SHEET OF

By: calvin Apr 19, 2013 - 9:02am
J:\2012\030A\DRAW\PHASE 2\030A-EX101.dwg

CONTROL RELAY SCHEDULE

Panel Name: RP1 MATC GENEVA
Location: Electrical Room 123
Transformer Voltage: 120
Control Circuit: L1-25

Relay #	Relay Rating	Description	Panel & Circuit	Load	Low Voltage Switch/Control
1	20A/1P	BOOK STORE LIGHTS	L1-20	1062	PROGRAM, $1
3	20A/1P	ENTRY AND LOUNGE LIGHTS	L1-22	1328	PROGRAM, $M
5	20A/1P	CORRIDOR LIGHTS	L1-24	434	PROGRAM, $M
7	20A/1P	LOUNGE LIGHTS	L1-24	1080	PROGRAM, $M
9	20A/1P	SPARE			
11	20A/1P	SPARE			
13	20A/1P	SPARE			
15	20A/1P	SPARE			
17	20A/1P	SPARE			
19	20A/1P	SPARE			
21	20A/1P	SPARE			
23	20A/1P	SPARE			
25	20A/1P	SPACE ONLY			
27	20A/1P	SPACE ONLY			
29	20A/1P	SPACE ONLY			
31	20A/1P	SPACE ONLY			
33	20A/1P	SPACE ONLY			
35	20A/1P	SPACE ONLY			
37	20A/1P	SPACE ONLY			
39	20A/1P	SPACE ONLY			
41	20A/1P	SPACE ONLY			
43	20A/1P	SPACE ONLY			
45	20A/1P	SPACE ONLY			
47	20A/1P	SPACE ONLY			
2	20A/1P	ELECTRICAL LAB LIGHTS (FUTURE)	L1-5	1180	PROGRAM, $2A
4	20A/1P	ELECTRICAL LAB LIGHTS (FUTURE)	L1-7	1180	PROGRAM, $2B
6	20A/1P	ELECTRICAL LAB LIGHTS (FUTURE)	L1-9	944	PROGRAM, $2C
8	20A/1P	ELECTRICAL LAB LIGHTS (FUTURE)	L1-11	944	PROGRAM, $2D
10	20A/1P	SPARE			
12	20A/1P	SPARE			
14	20A/1P	SPARE			
16	20A/1P	SPARE			
18	20A/1P	SPARE			
20	20A/1P	SPARE			
22	20A/1P	SPARE			
24	20A/1P	SPARE			
26	20A/1P	SPARE			
28	20A/1P	SPARE			
30	20A/1P	SPARE			
32	20A/1P	SPARE			
34	20A/1P	SPARE			
36	20A/1P	SPARE			
38	20A/1P	SPACE ONLY			
40	20A/1P	SPACE ONLY			
42	20A/1P	SPACE ONLY			
44	20A/1P	SPACE ONLY			
46	20A/1P	SPACE ONLY			
48	20A/1P	SPACE ONLY			

1. PHOTO ON OR OFF TO BE SET USING ASTRONOMICAL CLOCK.
2. COORDINATE PROGRAMMED AUTOMATIC ON/OFF SCHEDULE WITH OWNER.
3. UNDER CONTROLS, SWITCHES ARE NOTED BY SWITCH NUMBER AND BUTTON ID, EXAMPLE: 3B, STATION #3 AND BUTTON B

PANELBOARD SCHEDULE

PANEL L1 TYPE NQOD 120/208 VOLTS 3 PH 4 W
MOUNTING: ___ FLUSH, X SURFACE
DIMENSIONS: 20 W, 6 D (in.), ___ H
LOCATION: ELECT RM 123
AMP: 225
MAINS: X LUGS, ___ BREAKER, ___ SUBFEED LUGS, ___ ISO GROUND, ___ 200% NEUTRAL

BRANCH BREAKERS

ITEM	AMPS	POLE	WIRE SIZE	CIR. NO.	LEFT PHASE LOAD A	B	C	RIGHT PHASE LOAD A	B	C	CIR. NO.	AMPS	POLE	WIRE SIZE	ITEM
EGRESS LIGHTING	20	1	12	1	424			1160			2	20	1	12	LIGHTING
EGRESS LIGHTING	20	1	12	3		814			564		4	20	1	12	LIGHTING
LIGHTING (RP1-2)	20	1	12	5			1180			1464	6	20	1	12	LIGHTING
LIGHTING (RP1-4)	20	1	12	7	1180			1464			8	20	1	12	LIGHTING
LIGHTING (RP1-6)	20	1	12	9		944			1464		10	20	1	12	LIGHTING
LIGHTING (RP1-8)	20	1	12	11			944			1464	12	20	1	12	LIGHTING
SPARE	20	1		13				878			14	20	1	12	LIGHTING
SPARE	20	1		15					878		16	20	1	12	LIGHTING
SPARE	20	1		17						423	18	20	1	12	LIGHTING
SPARE	20	1		19				1062			20	20	1	12	LIGHTING (RP1-1)
SPARE	20	1		21					1328		22	20	1	12	LIGHTING (RP1-3)
SPARE	20	1		23						1514	24	20	1	12	LIGHTING (RP1-5,7)
RELAY PANEL 'RP1'	20	1	12	25	150						26	20	1		SPARE
SPARE	20	1		27							28	20	1		SPARE
SPARE	20	1		29							30	20	1		SPARE
SPARE	20	1		31							32	20	1		SPARE
SPARE	20	1		33							34	20	1		SPARE
SPARE	20	1		35							36	20	1		SPARE
SPARE	20	1		37							38	20	1		SPARE
SPARE	20	1		39							40	20	1		SPARE
SPARE	20	1		41							42	20	1		SPARE
					1754	1758	2124	4564	4234	4865					
					6318	5992	6989	TOTAL							
					53	50	58	AMPS/PHASE							

CONNECTED LOAD TOTAL 19299 VA
EQUIP RATING 22000 AMPS RMS SYM.
PROJECT NAME: MATC

PANELBOARD SCHEDULE

PANEL M2 TYPE NQOD 120/208 VOLTS 3 PH 4 W
MOUNTING: ___ FLUSH, X SURFACE
DIMENSIONS: 20 W, 6 D (in.), ___ H
LOCATION: ELECT. RM. 123
AMP: 400
MAINS: X LUGS, ___ BREAKER, ___ SUBFEED LUGS, ___ ISO GROUND, ___ 200% NEUTRAL

BRANCH BREAKERS

ITEM	AMPS	POLE	WIRE SIZE	CIR. NO.	LEFT PHASE LOAD A	B	C	RIGHT PHASE LOAD A	B	C	CIR. NO.	AMPS	POLE	WIRE SIZE	ITEM
ROOF TOP UNIT, RT-4	35	3	10	1	2428			1997			2	25	3	10	ROOF TOP UNIT, RT-10
-	-	-	-	3		2428			1997		4	-	-	-	FUTURE
-	-	-	-	5			2428			1997	6	-	-	-	-
ROOF TOP UNIT, RT-5	25	3	10	7	1997			1997			8	25	3	10	ROOF TOP UNIT, RT-11
FUTURE	-	-	-	9		1997			1997		10	-	-	-	FUTURE
-	-	-	-	11			1997			1997	12	-	-	-	-
ROOF TOP UNIT, RT-6	35	3	10	13	2428			1997			14	25	3	10	ROOF TOP UNIT, RT-1
FUTURE	-	-	-	15		2428			1997		16	-	-	-	-
-	-	-	-	17			2428			1997	18	-	-	-	-
ROOF TOP UNIT, RT-3	35	3	10	19	2428			2428			20	35	3	10	ROOF TOP UNIT, RT-2
-	-	-	-	21		2428			2428		22	-	-	-	-
-	-	-	-	23			2428			2428	24	-	-	-	-
EVAP COOLER	25	3	10	25	2100			715			26	20	2	12	AC-1
-	-	-	-	27		2100			715		28	-	-		-
-	-	-	-	29			2100			607	30	20	2	12	SPARE
EF-1	20	1	12	31	1180			607			32	-	-		-
EVAP PUMP	20	1	12	33		696					34	20	1		SPARE
SPARE	20	1		35							36	20	1		SPARE
SPARE	20	1		37							38	20	1		SPARE
SPARE	20	1		39							40	20	1		SPARE
SPARE	20	1		41							42	20	1		SPARE
					12561	12077	11381	9741	9134	9026					
					22302	21211	20407	TOTAL							
					186	177	170	AMPS/PHASE							

CONNECTED LOAD TOTAL 63920 VA
EQUIP RATING 22000 AMPS RMS SYM.
PROJECT NAME: MATC

PANELBOARD SCHEDULE

PANEL P5 TYPE NQOD 120/208 VOLTS 3 PH 4 W
MOUNTING: ___ FLUSH, X SURFACE
DIMENSIONS: 20 W, 6 D (in.), ___ H
LOCATION: ELECT. LAB 125
AMP: 225
MAINS: X LUGS, ___ BREAKER, ___ SUBFEED LUGS, ___ ISO GROUND, ___ 200% NEUTRAL

BRANCH BREAKERS

ITEM	AMPS	POLE	WIRE SIZE	CIR. NO.	LEFT PHASE LOAD A	B	C	RIGHT PHASE LOAD A	B	C	CIR. NO.	AMPS	POLE	WIRE SIZE	ITEM
PLC LAB RECEP	20	1	12	1	1000			540			2	20	1	12	RECEPTACLES
PLC LAB RECEP	20	1	12	3		1000			900		4	20	1	12	RECEPTACLES
PLC LAB RECEP	20	1	12	5			1000			900	6	20	1	12	RECEPTACLES
CORD REEL	20	1	12	7	720			1500			8	30	3	12	A-FRAME
CORD REEL	20	1	12	9		720			1500		10	-	-	-	-
CORD REEL	20	1	12	11			720			1500	12	-	-	-	-
CORD REEL	20	1	12	13	720			540			14	20	1	12	RECEPTACLES
CORD REEL	20	1	12	15		720			720		16	20	1	12	RECEPTACLES
CORD REEL	20	1	12	17			720			1180	18	20	1	12	RADIANT HEATER
CORD REEL	20	1	12	19	720						20	20	1		SPARE
CORD REEL	20	1	12	21		720					22	20	1		SPARE
CORD REEL	20	1	12	23			720				24	20	1		SPARE
CORD REEL	20	1	12	25	720						26	20	1		SPARE
BB-1	20	2	12	27		1000					28	20	1		SPARE
-	-	-	-	29			1000				30	20	1		SPARE
SPARE	20	1		31							32	20	1		SPARE
SPARE	20	1		33							34	20	1		SPARE
SPARE	20	1		35							36	20	1		SPARE
SPACE ONLY	20	1		37							38	20	1		SPACE ONLY
SPACE ONLY	20	1		39							40	20	1		SPACE ONLY
SPACE ONLY	20	1		41							42	20	1		SPACE ONLY
					3880	4160	4160	2580	3120	3580					
					6460	7280	7740	TOTAL							
					54	61	65	AMPS/PHASE							

CONNECTED LOAD TOTAL 21480 VA
EQUIP RATING 22000 AMPS RMS SYM.
PROJECT NAME: MATC

PANELBOARD SCHEDULE

PANEL P6 TYPE NQOD 120/208 VOLTS 3 PH 4 W
MOUNTING: ___ FLUSH, X SURFACE
DIMENSIONS: 20 W, 6 D (in.), ___ H
LOCATION: ELECT. RM. 123
AMP: 225
MAINS: X LUGS, ___ BREAKER, X SUBFEED LUGS, ___ ISO GROUND, ___ 200% NEUTRAL

BRANCH BREAKERS

ITEM	AMPS	POLE	WIRE SIZE	CIR. NO.	LEFT PHASE LOAD A	B	C	RIGHT PHASE LOAD A	B	C	CIR. NO.	AMPS	POLE	WIRE SIZE	ITEM
RM 124 COMPUTERS	20	1	12	1	600			600			2	20	1	12	RM 127 COMPUTERS
RM 124 COMPUTERS	20	1	12	3		600			600		4	20	1	12	RM 127 COMPUTERS
RM 124 COMPUTERS	20	1	12	5			600			600	6	20	1	12	RM 127 COMPUTERS
RM 124 COMPUTERS	20	1	12	7	600			600			8	20	1	12	RM 127 COMPUTERS
RM 124 COMPUTERS	20	1	12	9		600			600		10	20	1	12	RM 127 COMPUTERS
RM 124 COMPUTERS	20	1	12	11			600			600	12	20	1	12	RM 127 COMPUTERS
RM 124 COMPUTERS	20	1	12	13	600			600			14	20	1	12	RM 127 COMPUTERS
RM 124 COMPUTERS	20	1	12	15		600			600		16	20	1	12	RM 127 COMPUTERS
RM 124 A/V	20	1	12	17			850			850	18	20	1	12	RM 127 A/V
RM 124&127 RECEP	20	1	12	19	1080			600			20	20	1	12	RM 128 COMPUTERS
SERVER 4-PLEX	20	1	12	21		1000			600		22	20	1	12	RM 128 COMPUTERS
SERVER 4-PLEX	20	1	12	23			1000			600	24	20	1	12	RM 128 COMPUTERS
SPACE ONLY	20	1		25				600			26	20	1	12	RM 128 COMPUTERS
SPACE ONLY	20	1		27					600		28	20	1	12	RM 128 COMPUTERS
SPACE ONLY	20	1		29						600	30	20	1	12	RM 128 COMPUTERS
SPACE ONLY	20	1		31				600			32	20	1	12	RM 128 COMPUTERS
SPACE ONLY	20	1		33					600		34	20	1	12	RM 128 COMPUTERS
SPACE ONLY	20	1		35						850	36	20	1	12	RM 128 A/V
SPACE ONLY	20	1		37				900			38	20	1	12	RM 128 RECEPTACLES
SPACE ONLY	20	1		39					750		40	20	1	12	FA NAC PANELS
SPACE ONLY	20	1		41							42	20	1		SPACE ONLY
					2880	2800	3050	4500	4350	4100					
					7380	7150	7150	TOTAL							
					62	60	60	AMPS/PHASE							

CONNECTED LOAD TOTAL 21680 VA
EQUIP RATING 22000 AMPS RMS SYM.
PROJECT NAME: MATC

PANELBOARD SCHEDULE

PANEL P7 TYPE NQOD 120/208 VOLTS 3 PH 4 W
MOUNTING: ___ FLUSH, X SURFACE
DIMENSIONS: 20 W, 6 D (in.), ___ H
LOCATION: ELECT. RM. 123
AMP: 225
MAINS: X LUGS, ___ BREAKER, ___ SUBFEED LUGS, ___ ISO GROUND, ___ 200% NEUTRAL

BRANCH BREAKERS

ITEM	AMPS	POLE	WIRE SIZE	CIR. NO.	LEFT PHASE LOAD A	B	C	RIGHT PHASE LOAD A	B	C	CIR. NO.	AMPS	POLE	WIRE SIZE	ITEM
SPARE	20	1		1				1000			2	20	1	12	ST LOUNGE COUNTER
FIRE BELL	20	1		3					1000		4	20	1	12	ST LOUNGE COUNTER
SPARE	20	1		5						1000	6	20	1	12	ST LOUNGE COUNTER
ELEC ROOM RECEPT.	20	1		7				1000			8	20	1	12	ST LOUNGE COUNTER
SPARE	20	1		9					400		10	20	1	12	BOOKSTORE DESK
RECEPTACLES & CP-1	20	1	12	11			780			1000	12	20	1	12	BOOKSTORE RECEP
RECEPTACLES	20	1	12	13	900			1000			14	20	1	12	BOOKSTORE RECEP
RECEPTACLES	20	1	12	15		1080			1000		16	20	1	12	RECEP - VENDING
RECEPTACLES	20	1	12	17			360			1000	18	20	1	12	RECEP - VENDING
DRYER	30	2	10	19	2500			1000			20	20	1	12	RECEP - VENDING
-	-	-	-	21		2500			1000		22	20	1	12	RECEP - VENDING
DRYER	30	2	10	23			2500			540	24	20	1	12	RM 114 RECEPT.
-	-	-	-	25	2500			850			26	20	1	12	RM 114 A/V
WASHER	20	1	12	27		1200			600		28	20	1	12	RM 114 COMPUTERS
WASHER	20	1	12	29			1200			400	30	20	1	12	RM 114 COMPUTERS
RM 114 COMPUTERS	20	1	12	31	600			600			32	20	1	12	RM 114 COMPUTERS
RM 114 COMPUTERS	20	1	12	33		400			400		34	20	1	12	RM 114 COMPUTERS
SPARE	20	1		35						600	36	20	1	12	RM 114 COMPUTERS
SPARE	20	1		37				400			38	20	1	12	RM 114 COMPUTERS
SPARE	20	1		39					600		40	20	1	12	RM 114 COMPUTERS
RECEPTACLES	20	1	12	41			540			400	42	20	1	12	RM 114 COMPUTERS
					6500	5180	5380	5850	5000	4940					
					12350	10180	10320	TOTAL							
					103	85	86	AMPS/PHASE							

CONNECTED LOAD TOTAL 32850 VA
EQUIP RATING 22000 AMPS RMS SYM.
PROJECT NAME: MATC

PANELBOARD SCHEDULE

PANEL P8 TYPE NQOD 120/208 VOLTS 3 PH 4 W
MOUNTING: ___ FLUSH, X SURFACE
DIMENSIONS: 20 W, 6 D (in.), ___ H
LOCATION: ELECT. RM. 123
AMP: 225
MAINS: X LUGS, ___ BREAKER, ___ SUBFEED LUGS, ___ ISO GROUND, ___ 200% NEUTRAL

BRANCH BREAKERS

ITEM	AMPS	POLE	WIRE SIZE	CIR. NO.	LEFT PHASE LOAD A	B	C	RIGHT PHASE LOAD A	B	C	CIR. NO.	AMPS	POLE	WIRE SIZE	ITEM
RM 121 A/V	20	1	12	1	850			850			2	20	1	12	RM 121A A/V
RM 121 RECEPTACLES	20	1	12	3		540			540		4	20	1	12	RM 121A RECEPTACLES
RM 121 COMPUTERS	20	1	12	5			600			600	6	20	1	12	RM 121A COMPUTERS
RM 121 COMPUTERS	20	1	12	7	600			600			8	20	1	12	RM 121A COMPUTERS
RM 121 COMPUTERS	20	1	12	9		600			600		10	20	1	12	RM 121A COMPUTERS
RM 121 COMPUTERS	20	1	12	11			600			600	12	20	1	12	RM 121A COMPUTERS
RM 121 COMPUTERS	20	1	12	13	600			600			14	20	1	12	RM 121A COMPUTERS
RM 121 COMPUTERS	20	1	12	15		600			600		16	20	1	12	RM 121A COMPUTERS
RM 121 COMPUTERS	20	1	12	17			600			600	18	20	1	12	RM 121A COMPUTERS
RM 121 COMPUTERS	20	1	12	19	600			600			20	20	1	12	RM 121A COMPUTERS
AUTODOOR & EWC	20	1	12	21		1000					22	20	1		SPARE
SPARE	20	1		23							24	20	1		SPARE
SPARE	20	1		25							26	20	1		SPARE
SPARE	20	1		27							28	20	1		SPARE
SPARE	20	1		29							30	20	1		SPARE
SPARE	20	1		31							32	20	1		SPARE
SPARE	20	1		33							34	20	1		SPARE
SPARE	20	1		35							36	20	1		SPARE
SPARE	20	1		37							38	20	1		SPARE
SPARE	20	1		39							40	20	1		SPARE
SPARE	20	1		41							42	20	1		SPARE
					2650	2740	1800	2650	1740	1800					
					5300	4480	3600	TOTAL							
					44	37	30	AMPS/PHASE							

CONNECTED LOAD TOTAL 13380 VA
EQUIP RATING 22000 AMPS RMS SYM.
PROJECT NAME: MATC

DIVISION OF FACILITIES CONSTRUCTION AND MANAGEMENT
REVIEWED FOR CODE COMPLIANCE
SIGNATURE: FC
DATE: 4-23-13

HFSArchitects
ARCHITECTURE
INTERIORS
PLANNING
1484 South State Street
Salt Lake City, Utah 84101
801-596-0691/F: 596-0693
www.hfsa.com

CONSULTANT

BNA CONSULTING
SALT LAKE ST.GEORGE
635 South State Street
Salt Lake City, Utah 84111
P:801.532.2196
F:801.532.2305
www.bnaconsulting.com

© 2008 BNACONSULTING

LICENSED PROFESSIONAL ENGINEER No. 4816 GARY W. MESSER STATE OF UTAH

MOUNTAINLAND APPLIED TECHNOLOGY COLLEGE PHASE TWO
GENEVA BUILDING REMODEL
1410 BUSINESS PARK DRIVE
OREM, UTAH 84058

MARK	DATE	DESCRIPTION

DATE:	APRIL 19, 2013
AGENCY PROJECT NO:	09163260
HFSA PROJECT NO:	1204.01
CAD DWG FILE NO:	
DRAWN BY:	BNA
CHECKED BY:	RLW
DESIGNED BY:	RLW
DWG TYPE:	ELECTRICAL

ARCHITECTURAL PHASE: CONSTRUCTION BID DOCUMENTS

SHEET TITLE
PANELBOARD SCHEDULES

EX102
SHEET OF

By: calvin: Apr 19, 2013 – 9:02am
J:\2012\030A\DRAW\PHASE 2\030A-EX102.dwg

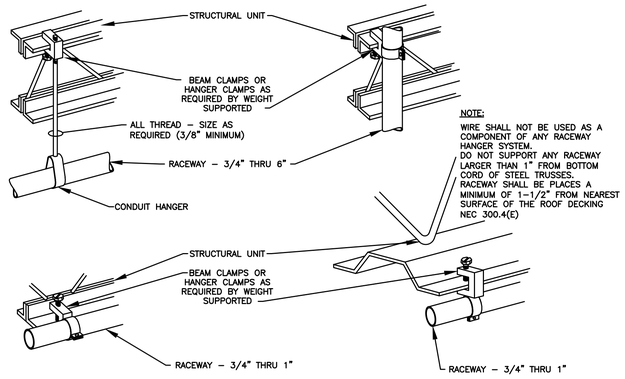

DIAGRAM H003 TYPICAL RACEWAY SUPPORT METHODS
NTS

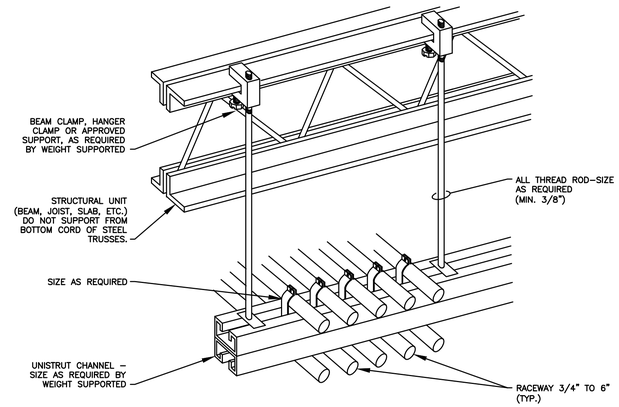

DIAGRAM H001 TYPICAL TRAPEZE CONDUIT RACK
NTS

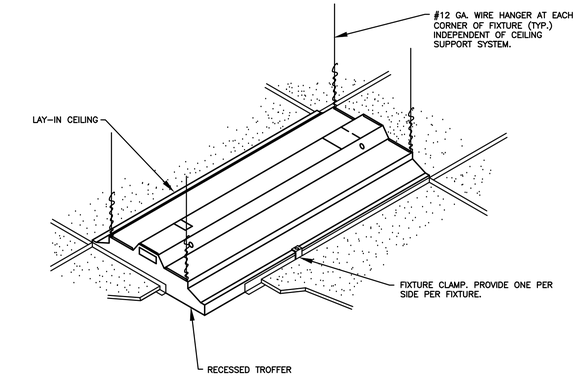

DIAGRAM A001 TYP. RECESSED FIXTURE MOUNTING
NTS

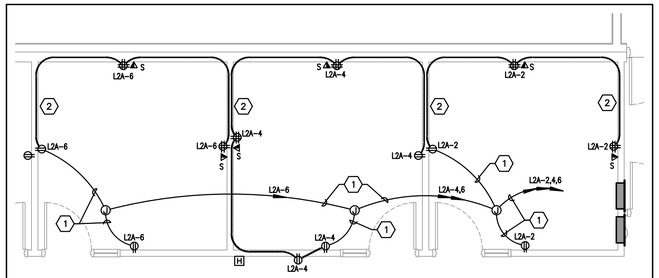

1. ALL RACEWAY ABOVE CEILING IS EMT.
2. ALL RACEWAY IN WALLS IS MC CABLE OR EMT.

DIAGRAM H014 TYPICAL ROUGH–IN REQUIREMENTS FOR MC CABLE
NTS

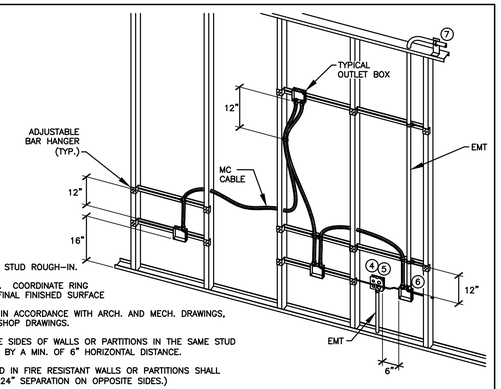

NOTES:
1. TYP. FOR WOOD AND METAL STUD ROUGH–IN.
2. PLASTER RINGS NOT SHOWN. COORDINATE RING DEPTH TO BE FLUSH WITH FINAL FINISHED SURFACE
3. LOCATE ALL OUTLET BOXES IN ACCORDANCE WITH ARCH. AND MECH. DRAWINGS, AND WITH ALL APPLICABLE SHOP DRAWINGS.
4. OUTLET BOXES ON OPPOSITE SIDES OF WALLS OR PARTITIONS IN THE SAME STUD SPACE MUST BE SEPARATED BY A MIN. OF 6" HORIZONTAL DISTANCE.
5. ELECTRICAL BOXES INSTALLED IN FIRE RESISTANT WALLS OR PARTITIONS SHALL COMPLY WITH IBC 712.3.2 (24" SEPARATION ON OPPOSITE SIDES.)
6. INSULATED THROAT EMT CONNECTOR.
7. HOME RUN TO PANEL MUST BE IN RACEWAY.

DIAGRAM H013 TYPICAL ROUGH IN REQUIREMENTS FOR MC CABLE
NTS

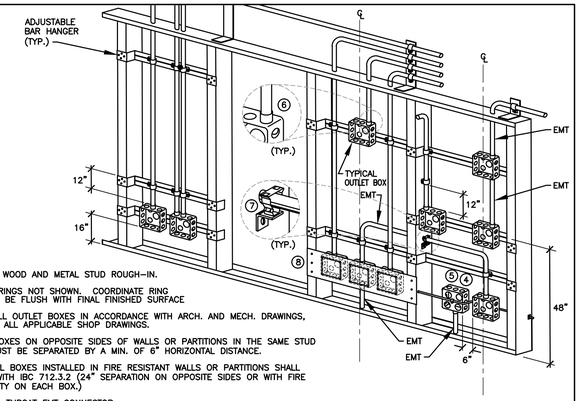

NOTES:
1. TYP. FOR WOOD AND METAL STUD ROUGH–IN.
2. PLASTER RINGS NOT SHOWN. COORDINATE RING DEPTH TO BE FLUSH WITH FINAL FINISHED SURFACE
3. LOCATE ALL OUTLET BOXES IN ACCORDANCE WITH ARCH. AND MECH. DRAWINGS, AND WITH ALL APPLICABLE SHOP DRAWINGS.
4. OUTLET BOXES ON OPPOSITE SIDES OF WALLS OR PARTITIONS IN THE SAME STUD SPACE MUST BE SEPARATED BY A MIN. OF 6" HORIZONTAL DISTANCE.
5. ELECTRICAL BOXES INSTALLED IN FIRE RESISTANT WALLS OR PARTITIONS SHALL COMPLY WITH IBC 712.3.2 (24" SEPARATION ON OPPOSITE SIDES OR WITH FIRE STOP PUTTY ON EACH BOX.)
6. INSULATED THROAT EMT CONNECTOR.
7. CADDY FASTENER, THROUGH STUD CABLE/CONDUIT SUPPORT 'FB12P'.
8. CADDY BOX MOUNTING BRACKET 'RBS16'.

DIAGRAM H004 TYPICAL ROUGH IN REQUIREMENTS
NTS

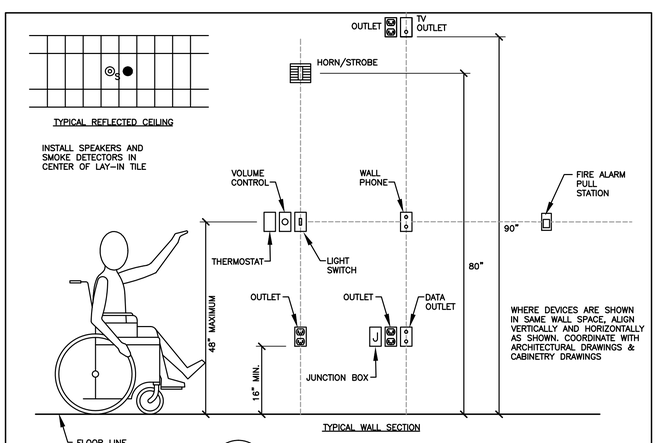

DIAGRAM R001 DEVICE MOUNTING HEIGHTS
NTS

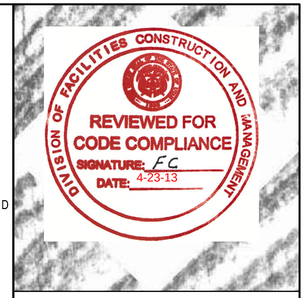

HFSArchitects
ARCHITECTURE
INTERIORS
PLANNING
1484 South State Street
Salt Lake City, Utah 84101
801-596-0691/F: 596-0693
www.hfsa.com

CONSULTANT
BNA CONSULTING
SALT LAKE ST.GEORGE
635 South State Street
Salt Lake City, Utah 84111
P:801.532.2196
F:801.532.2305
www.bnaconsulting.com

© 2008 BNACONSULTING

MOUNTAINLAND APPLIED TECHNOLOGY COLLEGE PHASE TWO

GENEVA BUILDING REMODEL
1410 BUSINESS PARK DRIVE
OREM, UTAH 84058

MARK	DATE	DESCRIPTION

DATE:	APRIL 19, 2013
AGENCY PROJECT NO:	09163260
HFSA PROJECT NO:	1204.01
CAD DWG FILE NO:	
DRAWN BY:	BNA
CHECKED BY:	RLW
DESIGNED BY:	RLW
DWG TYPE:	ELECTRICAL
ARCHITECTURAL PHASE:	CONSTRUCTION BID DOCUMENTS

SHEET TITLE

ELECTRICAL DIAGRAMS

EX201

SHEET OF

By: sshirc Apr 19, 2013 – 9:02am
J:\2012\030A\DRAW\PHASE 2\p030A–EX201.dwg

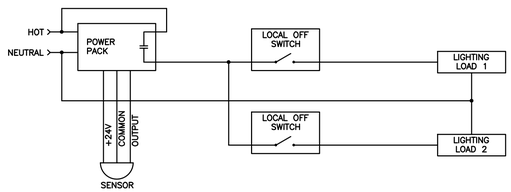

DIAGRAM S007 SENSOR CONTROLLING DUAL LEVEL LIGHTING
NTS

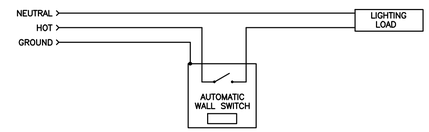

DIAGRAM S006 WALL SWITCH SENSOR
NTS

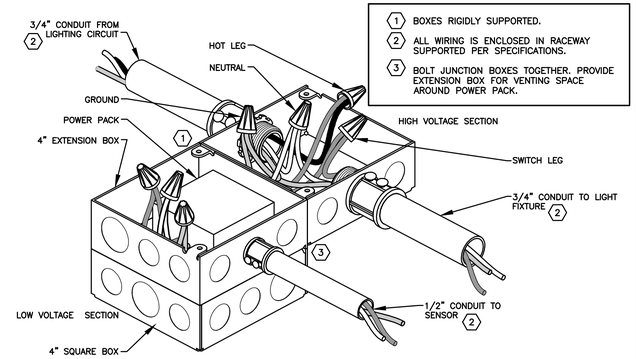

DIAGRAM S016 OCCUPANCY SENSOR POWER PACK
NTS

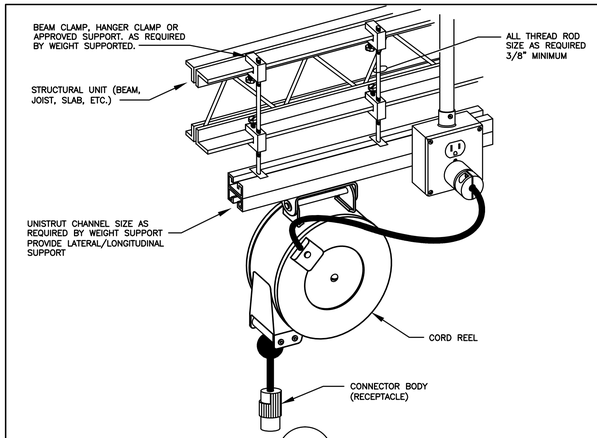

DIAGRAM K003 CORD REEL
NTS

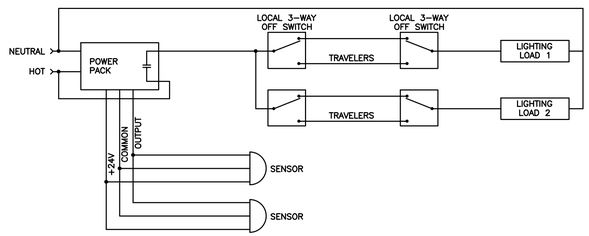

DIAGRAM S012 MULTIPLE SENSORS CONTROLLING DUAL LEVEL LIGHTING WITH 3-WAY SWITCHING
NTS

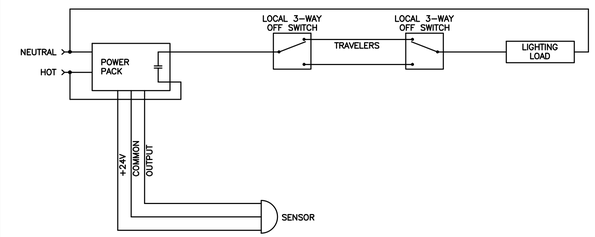

DIAGRAM S011 SENSOR WITH 3-WAY SWITCHING
NTS

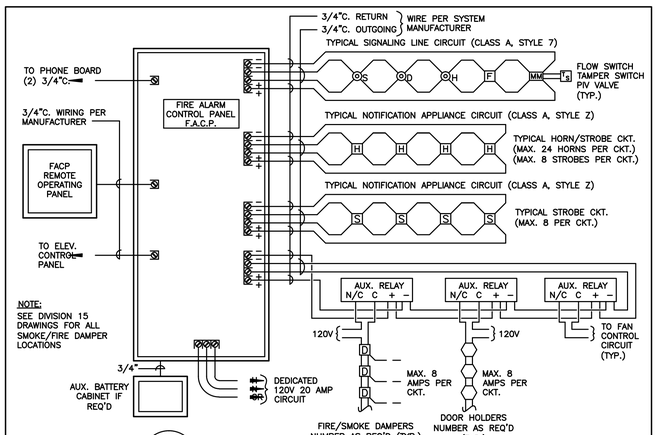

DIAGRAM D002 TYPICAL FIRE ALARM RISER
NTS

HFSArchitects
ARCHITECTURE
INTERIORS
PLANNING
1484 South State Street
Salt Lake City, Utah 84101
801-596-0691/F: 596-0693
www.hfsa.com

CONSULTANT
BNA CONSULTING
SALT LAKE ST.GEORGE
635 South State Street
Salt Lake City, Utah 84111
P:801.532.2196
F:801.532.2305
www.bnaconsulting.com

© 2008 BNACONSULTING

MOUNTAINLAND APPLIED TECHNOLOGY COLLEGE PHASE TWO

GENEVA BUILDING REMODEL
1410 BUSINESS PARK DRIVE
OREM, UTAH 84058

MARK	DATE	DESCRIPTION

DATE:	APRIL 19, 2013
AGENCY PROJECT NO:	09163260
HFSA PROJECT NO:	1204.01
CAD DWG FILE NO:	
DRAWN BY:	BNA
CHECKED BY:	RLW
DESIGNED BY:	RLW
DWG TYPE:	ELECTRICAL
ARCHITECTURAL PHASE:	CONSTRUCTION BID DOCUMENTS

SHEET TITLE

ELECTRICAL DIAGRAMS

EX202

SHEET OF

By: cchiric Apr 19, 2013 - 9:02am
J:\2012\0.030A\DRAW\PHASE 2\g030A-EX202.dwg