UTAH NATIONAL GUARD

Utility, Roads and Parking Improvements Phase I
RFP Design Guide Document

CAMP WILLIAMS, UTAH

August 8th, 2013

DFCM PROJECT NO.: 13316480

This is a bid document for bidding by Design Build teams bidding for:

Utility, Roads and Parking Improvements Phase 1 at Camp Williams .

DFCM project no. 13316480

This document is organized into 6 sections:

- General Special Requirements
- Utility Master Plans
- Upper Garrison Diagram
- Electrical Basis of Design
- Appendix A Soils Report
- Appendix B Specifications
- Appendix C Design Guidelines
- Appendix D Master Plan and Aerial
- Appendix E Future BEQ Site Plan

EFT ARCHITECTS INC.

This document was prepared by EFT Architects Inc.
Ensign Engineering—Civil Engineering
Ken Garner Engineering—Electrical Engineering

Published: August 8, 2013

The following instructions are special requirements for this project and will be considered included in the design build bids:

The term “responsibility,” used in the instructions that follow, includes architectural and engineering design, cost, schedule and construction responsibility for completion of this project in accordance with the documents of this Project / RFP for DFCM/UNG project no. 13316480, Utility, Roads and Parking Improvements Phase 1 at Camp Williams . The term “bidder” refers to the successful design build team including the General Contractor, the design team, and all associated subcontractors.

Geotechnical Report

The owner has provided a Geotechnical Report as part of this proposal information in Appendix A. This Geotechnical Report is provided as general information only and is not a warrant of subsurface conditions. It is the bidders responsibility to verify all geotechnical conditions prior to construction commencing. The bidder is responsible to pay for the services of a Geotechnical Engineer licensed in the State of Utah to coordinate and verify subsurface conditions that are to be addressed and resolved by new construction.

Demolition

It is the bidders responsibility to perform all demolition required in this project. The bidder is responsible for fugitive dust control, coordination with the Utah National Guard regarding removal of debris from the site, repairs to the existing facility during construction to provide/ maintain facility utilities, security/life safety, weather tightness, and maintenance of exit ways and staff/public access during construction. It is also the bidders responsibility to maintain all landscaping and mature street trees during construction.

Utilities and Impact Connections, Permits and Fees

It is the responsibility of the bidder to coordinate all Utility hook ups with the appropriate entities. It is the bidders responsibility to determine and coordinate schedule and cost of all impact and permit fees required for this project. Water flow tests and the resolution of required water pressure are the responsibility of the bidder.

Hazardous Material

Removal and control of existing hazardous materials in the current facility will be the responsibility of the State of Utah.

Schedules

Time is of the essence and the bidder must provide a critical path method (CPM) schedule at the beginning of the project to be approved by DFCM/UNG. This CPM schedule will be prepared by a professional scheduler and will be the measured schedule for the project. Once this initial CPM schedule is established and approved it will be updated monthly with each pay application. The initial CPM schedule cannot be modified except to indicate progress and recovery processes when the CPM schedule is not met. The bidder will also prepare a 3 week look-a-head and critical path only schedule for each job site meeting. A current 3 week look-a-head schedule and the updated CPM schedule must be submitted with each pay application in order for payment approval. The CPM schedule must also identify submittal deadlines and all long lead items required for the project.

Survey

It is the responsibility of the Bidder to provide an accurate ALTA surveys for all work prior to beginning construction. This survey needs to be coordinated with DFCM/UNG for existing subsurface utilities and other conditions. It is the Bidders responsibility to discover and resolve all subsurface conditions and avoid disruptions and damaging of all subsurface items.

Weekly Project Meetings

The bidder will conduct a weekly job site meeting to discuss and coordinate issues with DFCM and the Design Team. The bidder will provide and distribute meeting notes for each meeting. The architect and engineers of record's project managers must be in attendance to all job site meetings. Subcontractors are not required to attend these meeting unless it is necessary to coordinate special issues related to the owner.

Exclusions and Conflicts

Provide a comprehensive list of all exclusions or exceptions from the requirements of this RFP document. This list is required even if exclusion items are indicated in the documents. If conflicts are observed in the RFP documents or if the scope of work is not clearly defined, it is the responsibility of the bidder to notify DFCM of the conflict/clarity issue and request clarification in writing prior to bidding. Without clarification, the more stringent requirement will govern.

Access

Non construction access to the construction area must be controlled by barriers, fences, and warning signs. Traffic needs to be rerouted or controlled around construction areas. Bidders will provide a construction site trailer for coordination meetings with DFCM/UNG/Engineers and subcontractors.

LEED Requirements

This will be a LEED silver project.

Codes and Standards

The following is a list of codes, regulations, and standards that are applicable to this project, but is not necessarily all inclusive:

- International Building Code (IBC)*
- International Plumbing Code (IPC)*
- International Mechanical Code (IMC)*
- National Electrical Code (NEC)*
- Laws, Rules, and Regulations of the Utah State Fire Marshal
- LEED - Silver
- Americans with Disabilities Act (ADA)*
- DFCM Design Criteria*
- Army National Guard DG 415-5*
- Department of Defense UFC*
- NG Pam 415-5*

*The current editions in use must be confirmed with the appropriate agencies prior to beginning the design.

Bidders Design Responsibility

It is the Bidders responsibility to use the design guides in this document along with applicable code and design standards to design and finalize road layout, utilities and items such as fire hydrants street lights and sidewalks. All design work must be coordinated with the Utah National Guard (UNG) and DFCM for approval prior to construction. Design must be done by Utah licensed / registered Engineers and Architects. Engineers and Architects will be required to stamp all work. When the project is completed the Bidder will provide DFCM/UNG with accurate "As Constructed" documents in a format coordinated with DFCM/UNG.

Note: Bidder is responsible for design and construction of all storm drains ,catch basins and retention basins.

INTRODUCTION

The purpose of this project is to adjust the power system for road improvements projects, Phase 1 for Upper and Lower Garrison, at Camp Williams.

Note; References to Phase 2 work is for information and load calculations only. Phase 2 actual work is not in this contract.

There is a tremendous need for additional capacity for upcoming buildings. With 18 building sites in the lower garrison, the demand loads will likely almost double in a 5 to 10 year timeframe. In addition, there is a need for redundant, reliable power distribution, coupled with another design project for backup generators on the site.

There is also a need for a comprehensive and safe, reliable streetlighting and area lighting systems. The existing condition includes some areas completely dark, and a mix of various types of sources. Illumination varies dramatically from one area of the base to another. Specific improvements are needed at major intersections, and at the major grade change going towards the lower garrison on the new road extension.

In addition, the ability to provide future meters and SCADA system is incorporated into the design

POWER DISTRIBUTION/TRANSMISSION

- Rocky Mnt. Power, the serving power utility, provides power at 12.5 kV. The existing 12.5 kV lines were recently upgraded, and can handle over 5 MW additional capacity. The Camp Williams currently peaks at approximately 2 MW, and there are additional customers on the line. There may not be enough power for the full buildout of the lower garrison with 18 building sites in 25 years, however, once load growth exceeds 5 or 6 MW the base should consider a substation and a change to rate Schedule 9, or at least a redundant entry at 12470 volt.

STREETLIGHTING

- Phase 1 should provide some supplemental streetlighting at existing intersections and areas of poor lighting design, and in addition provide new street lighting along the 1st avenue road extension.
- Streetlighting circuits may be run in 1 inch conduit (or larger) and can share or parallel major ductbank runs.
- Designer shall provide photometric analysis of all proposed streetlighting poles, showing proper illumination. No area on new pavement shall be less than 0.2 footcandles, measured horizontally at the pavement, maintained. It will be the bidders responsibility to coordinate and locate streetlighting with the UNG.
- Streetlighting pole foundations shall consider and designed for poor soil conditions. Many areas have collapsible soil, and the base design shall take this into consideration. Please refer to Geotechnical Survey by bidder and in Appendix A of this document

TELECOMMUNICATIONS

- Phase 1 plans show new telecommunications along the new extension of 1st avenue. To provide a full pathway, we believe this ductbank should extend west to near building 8000, immediately south of the existing data center building.
- Redundant entry practices require that consideration be given for a future connection to the lower garrison. While the upper garrison roadways are being worked on, this may be an opportune time to provide a second redundant path towards the lower garrison. Preferred routing is near Utah Avenue, but no further north than Nevada Avenue. A shared location of crossing the canal may be prudent to follow water lines to the lower garrison.

EMERGENCY GENERATOR PROJECT

- The Utah National Guard has touched on a potential project for Emergency Generation site wide. The work of phase 1 and phase 2 should not impact the ability to provide such generation, although care should be taken to avoid using the last spare conduit running east and west from the wind towers to the electrical building, near Wyoming avenue.

ANTITERRORISM

- Any design of the electrical system should take anti-terrorism measures seriously, especially where located to sensitive buildings. Proper space between transformers and switchgear and the perimeter, and avoiding open and easy access to manholes, vents, and pullboxes is required. Please coordinate with UNG.

POWER MODELING

LOADING

Determining Loading at individual buildings or on overhead branch primary feeds is tricky, largely because there are few building meters on the system.

The best that can be done is to look at a square foot usage and divide the total peak load mathematically to see where the peak load is likely used. If we assume that 90% of the load is on the east side of the highway, and that the remaining load is divided 3 ways with most of the load on the south - it can be assumed that the loading is similar to the following table:

Branch (Existing loads)	*Estimated buildings (SF)*	*Assumed Maximum (kW)*	*Approx. (w/SF)*
Main service	na	1700	
Windmill generation	na	880	
TOTAL LOAD	684,000	2580	3.8
West		258	
North		464	
Central		697	
South		1161	

FUTURE LOADING

There are major facilities currently under construction, and many more planned in the next few years. The TASS and billiting barracks are intended to add 200,000 SF by themselves, all on line in the next few years. Additional development off the hill to the Southeast (lower garrison) will add at least 18 building sites. The lower garrison was originally planned to not exceed 300,000 SF within 5 years, but recent masterplanning shows the possibility of adding between 1,000,000 SF to 1,800,000 SF over 25 years (assuming between 60,000 and 100,000 SF built at each building site). The most likely type of buildings include office/classroom buildings.

For purposes of planning, we have assumed a 60,000 SF average building size, times 18 building sites, with total load not to exceed 5 MW at the lower garrison. This load added to other future loads show a maximum of 12.054 MW on the existing system. We believe that once load reaches 5 to 6 MW, a new substation will be necessary, which will allow moving to more favorable rate schedule 9 with Rocky Mnt Power, saving energy costs. A new substation could allow growth beyond the 12 MW range. An alternate to a new substation would be a redundant entry at 12,470 volt, perhaps from the South.

In addition, the new load, although largely motors and lighting is more efficient, will likely be higher demand due to the addition of air conditioning. Many of the current facilities lack air conditioning, but most new facilities will provide at least some air conditioning. We believe that the average demand will rise from 3.8 to at least 5 W/SF.

Future Loading	*Estimated buildings (SF)*	*Assumed Maximum (kW)*	*Approx. DEMAND (w/SF)*
TOTAL (Ex) LOAD	684,000	2580	3.8
Future Load TASS	200,000	1000	5
Future Load Lower Garrison	1,000,000	5000	5
South branch	807,800	3474	4.3
TOTAL (F) LOAD	2,691,800	12,054	4.5

FEEDER LOADING

EPR cables are available in a number of sizes, but choosing a standard, readily available size, would most likely make the most sense so that stock replacement parts would be available nearby.

The most common size feeders are #2, 4/0, 350, and 500 sizes. The 500 allows 400 amps per phase, and allows up to 8 MW maximum, and about half this (4 MW) on a typical basis. Although we could pick up the entire base using this feeder, it does not seem prudent to distribute so much aluminum size down every ductbank. In addition, a single branch, as discussed previously, only leads to cascading failures catastrophic to the entire base.

It is clear that #2 is too small, except for direct transformer feeders, and #4/0 leaves not much future growth headroom. We are proposing to use a 350 KCM sized EPR feeder to match the existing. The 350 can handle up to 6 MW, but normally only 3 MW per run when running half load. Typical loads on our design would run around 2.5 MW maximum, assuming there is a redundant path to the lower garrison, allowing for future growth on each circuit, but still allowing the loop feed concept, with each feeder able to backup the adjacent feeder.

SELECTIVE COORDINATION

A goal of any breaker setting scheme should keep the following recommendations in mind:

- The Main breakers are intended to carry up to 1200 amps for 12470 volt substations. This will carry the 12 MW anticipated in the full buildout of the south loop and lower garrison.
- The branch breakers and the trip settings are intended to carry a maximum of between 200 and 300 amps for 350 KCM copper 15 kV conductors, depending on the insulation type.
- Selective Coordination between branch breakers and main breaker is mandatory. Branch shall trip on fault or overload in branch. Main should only trip in overload condition or fault at the substation.
- Ground fault settings on branch runs should provide a balance between safety of personnel working near feeders, and no nuisance tripping.
- Ground fault settings on main should provide some protection at the substation for ground faults, but branch breaker should trip first if ground fault is in branch run. It could be argued that ground fault is not mandatory in the main, but since we have it, set it high and use it as added safety and protection of personnel, branch feeders, and substation equipment.
- Overcurrent protection at the various buildings transformers should trip on overload of one building, and also provide protection of the transformer.
- Curve settings at both the various buildings, and at the substation branch would be set higher than transformer/building in-rush.
- Curve settings at the various buildings would be set lower than the transformer damage curve. Branch breaker at the substation can be set higher than the transformer damage curves as long as the building overcurrent device protects the transformer.

To be sure that the best possible selective coordination is obtained, a full computer analysis should be performed for any portion of the system that is modified as part of phase 1, and for the future phase 2. As part of this computer analysis, the design engineer would be required to review loading data, transformer and overcurrent sizes and settings, and understand the current state of the feeders and switch positions throughout the Camp Williams system. Computer analysis also requires multiple runs of the software to guarantee the best selective coordination that might be obtained. Even then, depending on the actual hardware in the field, selective coordination sometimes cannot be obtained in all cases. Engineering judgment and best practice would be used to balance all of these issues.

It is highly recommended that in the future, breaker and relay settings either be published on the engineers design drawings or specifications, or at least have a selective coordination study be performed prior to the commissioning process. This will allow easier Transition for the base, and avoid issues such as the commissioning agent showing up without proper settings.

REDUNDANCY AND RELIABILITY

Since outages, both planned, and unplanned, are constantly occurring on any typical electrical distribution system, reliability should consider a duplicate feeder, or a loop style feeder system for the lower garrison. Phase 1 design concepts should accommodate for this.

This concept is similar for both power and telecommunications links.

A loop feed allows manual switching to bypass major outages if the transformers or main feeders were ever to fail. This manual switching also allows planned outages to occur.

POWER: TYPES AND SIZES OF EQUIPMENT

Wire: 350 EPR, 220 mil insulation, aluminum conductor, copper tape shield
Switches: Vacuum Fault Interrupter, SF6 gas insulating medium, similar to S&C existing

Transformers: FR3 fluid filled, loop feed with lightning arrestors, similar to existing

Ductbank: 5 inch, concrete encased, with additional 1 inch conduits for metering and street lighting

STREETLIGHTING CIRCUITS:

Streetlights: 30 foot high, type III or type II distribution, LED preferred, to closely match the “shoebox” style cutoff luminaires on base

TELECOMMUNICATIONS:

A minimum of 6 each 4 inch conduits shall be installed along the road extension of 1st avenue, and turn west towards building 8000 near 2nd avenue and Camp Williams Blvd. Provide pullboxes, sized to BICSI standards, at all bends larger than 45 degrees.

Note: see Appendix C for Electrical Design Narrative

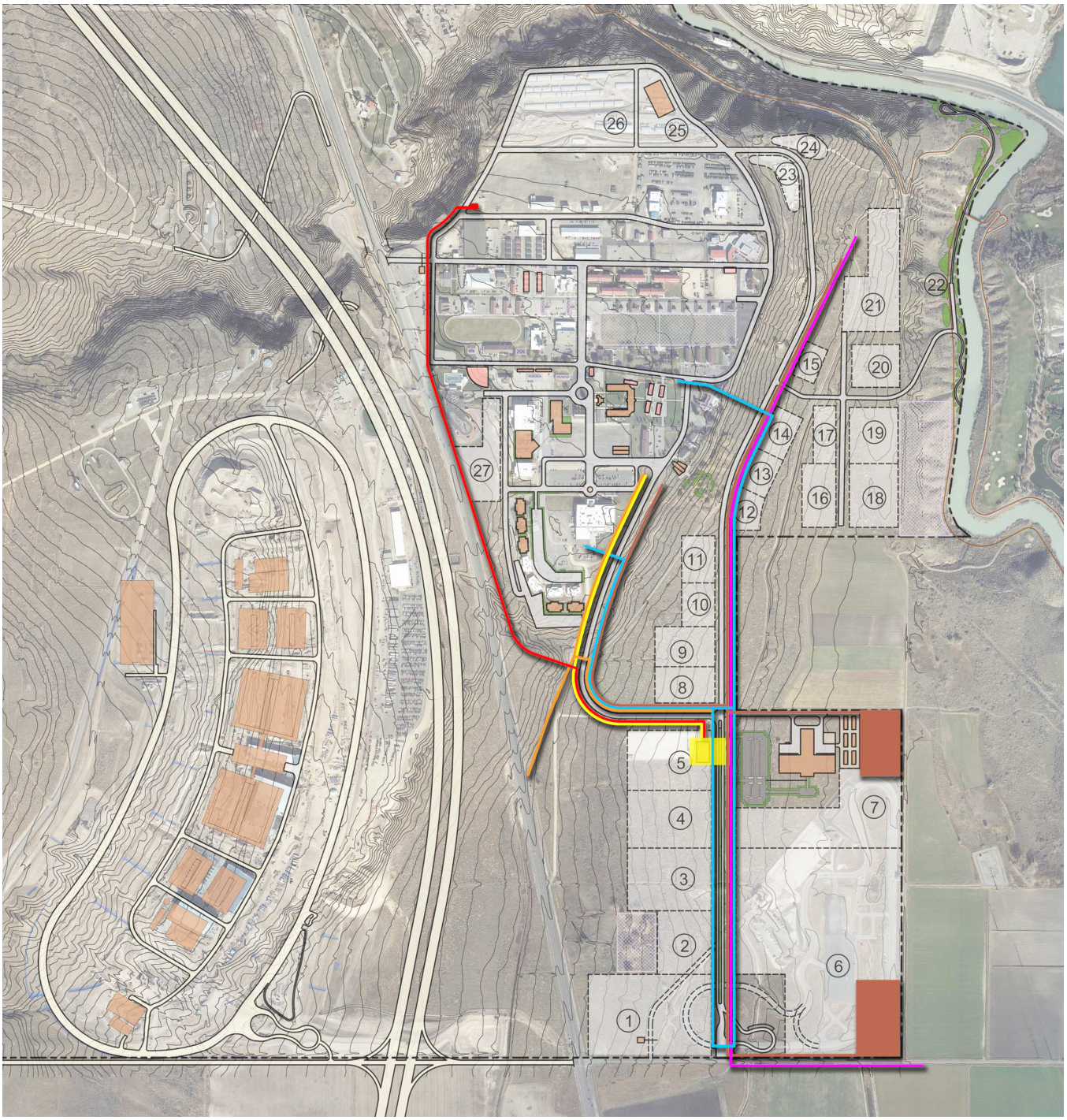

Overall Utility Master Plan

Map Key

- Data and Telecom
- Power
- Natural Gas
- Water
- Sanitary Sewer
- Storm Sewer/Retention

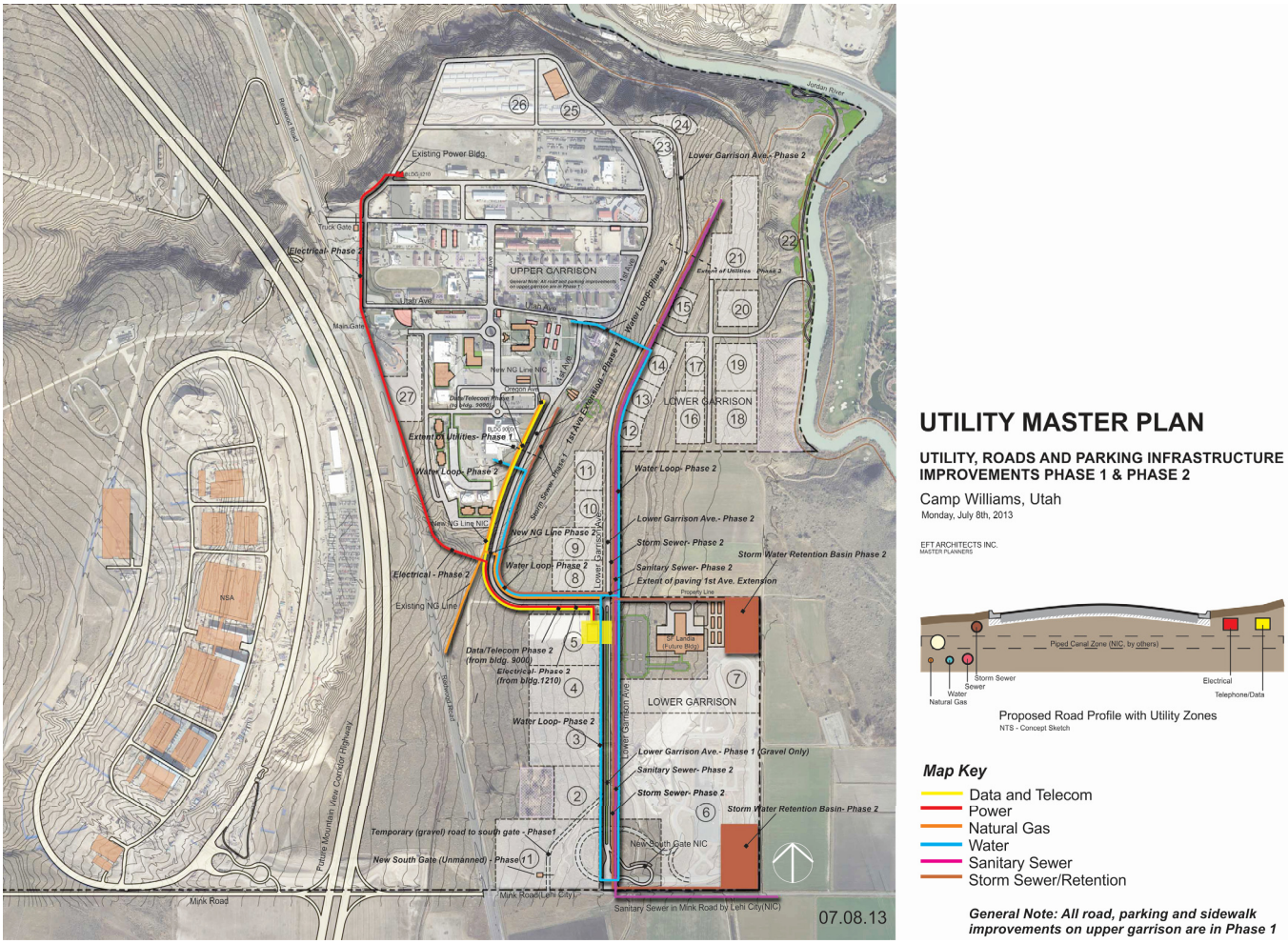

Overall Utility Master Plan by Phases

This document is a scope of work document for both phase 1 and phase 2. Care should be made in the study of this document to understand the details of each phase.

Note: For Design Build Phase 1 Bidders this master plan by phases diagram is an important part of the bid documents. This document does define the scope of work for Phase 1 and should therefore be carefully studied by Bidders. This document also helps define how the two phases overlap in scope. Also see Upper Garrison Diagram on the next page.

NORTH

1 ROADS PARKING & SIDEWALKS
1" = 200'-0"

8-8-2013

0 100' 200' 400'

This document is a scope of work document for phase 1 . Care should be made in the study of this document to understand the details of phase1. Note: A new 1st Ave extends from this diagram down to Lower Garrison Ave. This entire extension is paved with Asphalt and has curb and gutter. In Phase 1 Lower Garrison Ave extends south from the intersection with 1st Ave to Mink Road. This road will be only Graveled.

This exact location and configuration of the 1st Ave extension will be the responsibility of the Bidder. This will need to be coordinated with DFCM/UNG. Power and Telcom/Data will extend down 2nd Ave to Oregon Ave and then down the extension of 1st Ave. to Bldg. 9000. Power and Telecom/Data are located in a Manhole at Utah Ave and 2nd Ave.

This Appendix contains the current Soils Report by DFCM. It is the Bidders responsibility to assure that accurate soils surveys are completed for all areas of this project.

June 29, 2007
Job No. 0128-008-07

State of Utah
Division of Facilities Construction and Management
4110 State Office Building
Salt Lake City, Utah 84114

Attention: Messrs. Wayne Smith and Scott Potter

Gentlemen:

Re: Report
Preliminary Geotechnical Study
Approximately 20 Acres of Land, East and South of the
Existing Camp Williams Facilities
Bluffdale, Utah
DFCM Project No. 077463

1. INTRODUCTION

1.1 GENERAL

This report presents the results of our preliminary geotechnical study performed at the site of approximately 20 acres located east and south of the existing Camp Williams facilities in Bluffdale, Utah. The general location of the site with respect to major topographic features, existing facilities, and roads as of 1999, is presented on Figure 1, Vicinity Map. A more detailed layout of the site showing the existing facilities and roadways is presented on Figure 2, Site Plan. The locations of the test pits excavated in conjunction with this study are also presented on Figure 2.

1.2 OBJECTIVES AND SCOPE

The objectives and scope of our study were planned in discussions between Messrs. Wayne Smith and Scott Potter of the State of Utah, and Mr. Alan Spilker of Gordon Spilker Huber Geotechnical Consultants, Inc (GSH).

draft

Gordon Spilker Huber Geotechnical Consultants, Inc.
4426 South Century Drive, Suite 100
Salt Lake City, Utah 84123
Tel: (801) 685-9190 Fax: (801) 685-2990
www.gshgeotech.com

In general, the objectives of this study were to:

1. Define and evaluate the subsurface soil and groundwater conditions across the site.

2. Provide appropriate foundation, earthwork, and pavement recommendations to be utilized in the design and construction of the proposed facilities.

In accomplishing these objectives, our scope has included the following:

1. A field program consisting of the excavating, logging, and sampling of 12 test pits.

2. A laboratory testing program.

3. An office program consisting of the correlation of available data, engineering analyses, and the preparation of this summary report.

1.3 AUTHORIZATION

Authorization was provided by returning an executed copy of GSH's Professional Services Agreement Contract Modification for DFCM Project No. 077463.

1.4 PROFESSIONAL STATEMENTS

Supporting data upon which our recommendations are based are presented in subsequent sections of this report. Recommendations presented herein are governed by the physical properties of the soils encountered in the exploration test pits, projected groundwater conditions, and the layout and design data discussed in Section 2., Proposed Construction, of this report. If subsurface conditions other than those described in this report are encountered and/or if design and layout changes are implemented, GSH must be informed so that our recommendations can be reviewed and amended, if necessary.

Our professional services have been performed, our findings developed, and our recommendations prepared in accordance with generally accepted engineering principles and practices in this area at this time.

2. PROPOSED CONSTRUCTION

It is proposed that various types and sizes of training and production facilities will be constructed within the approximate 20 acres of land located east and south of the existing Camp Williams facilities. The structures are projected to vary from one to two-levels to as many as five to six levels above grade. The structures are anticipated to be constructed slab-on-grade with some of the structures having partial- to full-depth basements. Below grade, the structures will be of

draft

reinforced concrete construction. Structures are anticipated to be of masonry and/or light steel construction. Anticipated maximum real wall and column loads are projected to range from 2 to 8 kips per lineal foot and 20 to 120 kips, respectively. We project that the floor slab loads will be light (less than an average uniform load of 200 pounds per square foot).

Site-specific geotechnical studies are anticipated to be performed for each proposed structure type within the site boundary.

Development will also include fairly extensive flexible pavements. Ultimate traffic in the roadway areas is projected to consist of a moderate volume of automobiles and light trucks, and occasional medium- and heavy-weight trucks. During construction, the volume of medium- and heavy-weight trucks will be significantly higher.

Site development will require earthwork in the form of cutting and filling. At this time we project that maximum cuts and fills will generally not exceed 8 to 10 feet.

3. SITE INVESTIGATIONS

3.1 FIELD PROGRAM

In order to define and evaluate the subsurface soil and groundwater conditions across the site, 12 test pits were excavated to depths of 12.0 to 18.5 feet with a rubber-tire backhoe. The approximate locations of the test pits are presented on Figure 2.

The field portion of our study was under the direct control and continual supervision of an experienced member of our geotechnical staff. During the course of the field operations, a continuous log of the subsurface conditions encountered was maintained. In addition, samples of the typical soils encountered were obtained for subsequent laboratory testing and examination. The soils were classified in the field based upon visual and textural examination. These classifications have been supplemented by subsequent inspection and testing in our laboratory. Detailed graphical representation of the subsurface conditions encountered is presented on Figures 3A through 3L, Log of Test Pits. Soils were classified in accordance with the nomenclature described on Figure 4, Unified Soil Classification System.

A 2.42-inch inside diameter thin-wall hand sampler was utilized in the subsurface sampling at the site.

Following completion of excavating and logging, each test pit was backfilled. Although an effort was made to compact the backfill with the backhoe, backfill was not placed in uniform lifts and compacted to a specific density. Consequently, settlement of the backfill with time is likely to occur.

draft

Additionally, one and one-quarter-inch diameter slotted PVC pipe was installed in Test Pits TP-1, TP-4, TP-8, and TP-11 in order to provide a means of monitoring the groundwater fluctuations.

3.2 LABORATORY TESTING

3.2.1 General

In order to provide data necessary for our engineering analyses, a laboratory testing program was performed. The program included moisture and density, collapse-consolidation, partial gradation, and chemical tests. The following paragraphs describe the tests and summarize the test data.

3.2.2 Moisture and Density Tests

To aid in classifying the soils and to help correlate other test data, moisture and density tests were performed on selected samples. The results of these tests are presented on the test pit logs, Figures 3A through 3L.

3.2.3 Collapse-Consolidation Tests

To provide data necessary for our settlement analysis, collapse-consolidation tests were performed upon representative samples of the natural silty clay soils. The collapse portion of the test was performed as follows:

1. Load sample at in-situ moisture content to specific axial pressure.
2. Measure and record axial deflection.
3. Saturate sample.
4. Measure and record resulting collapse.

The test results are tabulated below:

Test Pit No.	Depth (feet)	USCS Soil Type	Natural Dry Density (pcf)	Natural Moisture Content (percent)	Axial Load When Saturated (psf)	Collapse (percent)
TP-2	2.0	CL	89	18.3	1,600	2.2
TP-6	5.0	CL	73	17.3	1,600	9.1
TP-12	6.0	CL	75	15.0	1,600	1.6

draft

Upon completion of the collapse portion of the tests, standard consolidation test loading was applied to the sample from Test Pit TP-12. The results of these tests indicate that soils tested are collapsible, moderately to highly compressible, and exhibit low to moderate preconsolidation pressures. Detailed results of these tests are maintained within our files and can be transmitted to you, upon your request.

3.2.4 Partial Gradation

To aid in classifying the granular soils, partial gradation tests were performed. Results are tabulated below:

Test Pit No.	Depth (feet)	Percent Passing No. 200 Sieve	Soil Classification
TP-1	12.0	49.1	SM/ML
TP-4	6.0	28.5	SM

3.2.5 Chemical Tests

To determine if the site soils will react detrimentally with concrete, chemical tests were performed on a representative sample of the silty clay soils encountered in Test Pit TP-3 at a depth of three feet below existing grade. The results of the chemical tests are presented below:

Test Pit No.	Depth (feet)	pH	Total Water Soluble Sulfate (ppm)
TP-4	2	7.13	300

4. SITE CONDITIONS

4.1 SURFACE

The site is an undeveloped parcel of approximately 20 acres located east and south of Camp Williams in Bluffdale, Utah. The site slopes downward to the east with a relief of approximately 80 to 120 feet across the site toward the Jordan River. The site has multiple dry washes that flow toward the east and are spread across the rolling surface of the site. The site is covered with sage brush, grasses, and weeds with patchy areas of thick vegetation. Surrounding the site, land use consists of similar undeveloped vacant land with the exception of the existing Camp Williams facility to the north and east, and the Utah Highway Patrol training facility to the south. Along the western boundary of the site is a canal.

draft

4.2 SUBSURFACE SOIL AND GROUNDWATER

From the surface in Test Pits TP-1 through TP-3, TP-5, TP-6, TP-9, and TP-12 and extending to depths of 5 to 10 feet is silty clay with varying amounts of fine sand. The clay is stiff to very stiff, moist, and light brown. The natural silty clay soils to depths of five to nine feet and possibly deeper across the site contain a "pinhole" structure, which is normally an indicator that the soils are potentially collapsible. The results of our laboratory tests have confirmed that the clay soils containing pinholes are moderately to highly collapsible. Collapsible soils will exhibit relatively high strength and low compressibility characteristics when dry, but lose strength, become highly compressible, and collapse with significant increase in moisture content.

Underlying the clay and extending to the explored depths of 15.0 and 16.5 feet in Test Pits TP-5 and TP-9, respectively, and to the depths of 17.0, 17.0, 13.0, 13.0, and 11.0 in Test Pits TP-1 through TP-3, TP-6, and TP-12, respectively, is silty sand and silty sand/sandy silt. These soils are medium dense, moist, brown, light brown, and are not moisture sensitive.

Underlying the silty sand and silty sand/sandy silt and extending to the depths explored, 18.5, 18.5, and 15.0 feet in Test Pits TP-1 through TP-3 is silty gravel with varying amounts of fine to coarse sand. The gravel is medium dense to dense, moist, brown, and not moisture sensitive.

Underlying the silty/sand in Test Pits TP-6 and TP-12 and extending to the depth explored, 16.5 feet, in each test pit is silty clay with some fine sand. The clay is medium stiff to stiff, moist, brown, gray, and are not moisture sensitive.

From the surface in Test Pits TP-4 and TP-7 and extending to a depth of six and eight feet, respectively, is silty fine and coarse gravel with some fine sand. The gravel is medium dense, moist, brown, and is not moisture sensitive. Underneath the gravel and extending to the explored depth of 14.5 feet in Test Pit TP-4 and to a depth of 11.0 feet in Test Pit TP-7 is silty fine to medium sand. The sand is medium dense, moist, brown, and are not moisture sensitive. Underlying the sand in Test Pit TP-7 and extending to the explored depth of 12.5 feet is silty clay with some fine sand. The silty clay is medium stiff, moist, brown, blocky, and not moisture sensitive.

From the surface in Test Pit TP-8 and extending to a depth of 11 feet is non-engineered fill consisting of silty fine and coarse gravel, landfill debris, trash, and newspapers. Underlying the non-engineered fill and extending to a depth of 14.0 feet is silty clay with some fine sand. The silty clay is medium stiff, moist, brown, blocky, and not moisture sensitive. Underneath the clay and extending to the explored depth of 15.5 feet is silty fine sand. The sand is medium dense, moist, brown, and not moisture sensitive.

From the surface in Test Pit TP-10 and extending to a depth of two feet is silty fine sand. The sand is medium dense, moist, brown, and not moisture sensitive. Underlying the sand is silty fine and coarse gravel with some fine sand. The gravel is medium dense, moist, brown, and not

draft

moisture sensitive. Underneath the gravel and extending to the explored depth of 12 feet is silty clay with some fine sand. The clay is medium stiff, moist, brown, and not moisture sensitive.

From the surface and extending to the explored depth of 11 feet is silty clay with varying amounts of fine sand. The clay is stiff, moist, brown, and contains white mottling. The natural silty clay soils extending to a depth of approximately five feet contain a "pinhole structure", which is normally an indicator that the soils are potentially collapsible. The silty clay grades blocky and layered at a depth of approximately five feet. The blocky and layered silty clay is medium stiff, moist, brown, and not moisture sensitive.

Groundwater was not encountered in the test pits during excavation operations or during a follow-up visit approximately one week later. Groundwater is not anticipated to affect design or construction of the proposed structures.

5. DISCUSSIONS AND RECOMMENDATIONS

5.1 SUMMARY OF FINDINGS

The most significant geotechnical aspects of the site are:

1. Potentially collapsible soils encountered to depths of up to nine feet and possibly deeper across the site.

2. Non-engineered fill encountered to a depth of 11 feet in the vicinity of Test Pit TP-8.

The results of this study indicate that the proposed structures may be supported upon conventional spread and continuous wall foundations placed on suitable natural soils or structural fill extending to suitable natural soils.

Collapsible soils which extend to depths of eight feet and possibly deeper throughout the site are not suitable and under no circumstances should foundations, floor slabs, rigid pavement, or exterior flatwork be placed over these collapsible soils. In flexible pavement areas, the collapsible soils may remain if properly prepared as discussed later within this report.

Non-engineered fill was encountered to a depth of 11 feet within Test Pit TP-8. The non-engineered fills will exhibit variable and most likely poor engineering characteristics and are not suitable for the support of footings, floor slabs, rigid pavements, or exterior flatwork. The non-engineered fills may remain underneath flexible pavements provided they are prepared as described in Section 5.2.1., Site Preparation.

Collapsible soils appear to be present across much of the site to varying depths. Additionally, non-engineered fill was encountered in isolated areas within the site. Therefore, we recommend

draft

that a qualified geotechnical engineer observe foundation excavations to identify that all collapsible soils and non-engineered fill have been removed.

In the following sections, detailed discussions pertaining to earthwork, foundations, floor slabs, pavements, and the geoseismic setting of the site are provided.

5.2 EARTHWORK

5.2.1 Site Preparation

Prior to initiation of major construction activities, all collapsible soils, non-engineered fill, surface vegetation, topsoil, and other deleterious materials must be removed from an area which extends five feet beyond the perimeter of the proposed structure, floor slabs, rigid pavements, and exterior flatwork areas.

Potentially collapsible soils and non-engineered fills may remain beneath flexible pavements if they do not contain deleterious materials and are less than two and one-half feet thick. The proper preparation of the collapsible soils and non-engineered fills will consist of the scarification of the upper nine inches, moisture preparation, and compaction to the requirements for structural fill. Even if properly prepared, some long-term movements of flexible pavements overlying the potentially collapsible soils and non-engineered fills may occur. If these long-term movements are not acceptable, the collapsible and non-engineered fills must be completely removed.

Subsequent to the above operations and prior to the placement of footings, structural site grading fill, floor slabs, or pavements, the exposed subgrade must be proofrolled by running moderate-weight rubber tire-mounted construction equipment uniformly over the surface at least three times. If excessively soft or otherwise unsuitable soils are encountered beneath footings, they must be completely removed. In pavement and floor slab areas, unsuitable soils encountered during recompaction and/or proofrolling must be completely removed and replaced with compacted granular structural fill.

Surface vegetation and other deleterious materials should be removed from the site. Topsoil, although unsuitable for utilization as structural fill, may be stockpiled for subsequent landscaping purposes.

5.2.2 Excavations

Temporary construction excavations not exceeding four feet in depth in natural fine-grained clay soils may be constructed with near-vertical sideslopes. Temporary construction excavations not exceeding four feet in depth in natural sand and gravel soils may be constructed with sideslopes no steeper than one-half horizontal to one vertical. Temporary construction excavations not exceeding eight feet in depth in natural fine-grained clay soils may be constructed with sideslopes no steeper than one-half horizontal to one vertical. Temporary construction

draft

excavations not exceeding eight feet in depth in natural sand and gravel soils may be constructed with sideslopes no steeper than one horizontal to one vertical. Excavations deeper than eight feet are not anticipated at the site. If extensive layers of clean granular soils and/or groundwater are encountered, flatter sideslopes, shoring and bracing, and/or dewatering may be required.

All excavations must be inspected periodically by qualified personnel. If any signs of instability or excessive sloughing are noted, immediate remedial action must be initiated.

5.2.3 Structural Fill

Structural fill will be required as site grading fill, as backfill over foundations and utilities, and possibly as replacement fill below footings and slabs. All structural fill must be free of sod, rubbish, construction debris, frozen soil, and other deleterious materials. The maximum particle size within structural site grading fill should generally not exceed four inches; although, occasional particles up to six to eight inches may be incorporated provided that they do not result in "honeycombing" or preclude the obtainment of the desired degree of compaction. Structural site grading fill is defined as fill placed over fairly large open areas to raise the overall site grade. For the site conditions, we recommend that a mixture of sands and gravels containing at least 20 percent fines; that is, either silt or clay particles, be utilized as granular fills. The purpose of the relatively high percentage of fines is to render the compacted material less permeable; thus, reducing the possibility of deep infiltration of surface water runoff into the underlying soil sequence. In confined areas the maximum particle size should generally be restricted to two inches.

Prior to placing structural site grading fill, the subgrade should be proofrolled as discussed in Section 5.2.1, Site Preparation. In confined areas, preparation of the subgrade will consist of the removal of all loose and disturbed soils.

5.2.4 Fill Placement and Compaction

All structural fill should be placed in lifts not exceeding eight inches in loose thickness. Fills 5 to 10 feet thick, and beneath all footings and floor slabs, must be compacted to at least 95 percent of the maximum dry density as determined by the AASHTO[1] T-180 (ASTM[2] D-1557) compaction criteria. Structural fills greater than 10 feet are not anticipated at the site. Fills less than 5 feet thick, which are not beneath an area extending out at least 5 feet from the perimeter of the structure, should be compacted to at least 90 percent of the above-defined criteria.

Prior to the placement of structural site grading fill, pavements, floor slabs, or footings, the exposed subgrade must be prepared as discussed in Section 5.2.1, Site Preperation, of this report. In confined areas, subgrade preparation must consist of the removal of all loose or disturbed soils.

---

1 American Association of State Highway and Transportation Officials
2 American Society for Testing and Materials

Non-structural fill may be placed in lifts not exceeding 12 inches in loose thickness and compacted by passing construction, spreading, or hauling equipment over the surface at least twice.

5.2.5 Utility Trenches

All utility trench backfill material below structurally loaded facilities (flatwork, floor slabs, roads, etc.) should be placed at the same density requirements established for structural fill. If the surface of the backfill becomes disturbed during the course of construction, the backfill should be proof-rolled and/or properly compacted prior to the construction of any exterior flatwork over a backfilled trench. Proof-rolling may be performed by passing moderately loaded rubber tire-mounted construction equipment uniformly over the surface at least twice. If excessively loose or soft areas are encountered during proof-rolling, they should be removed to a maximum depth of two feet below design finish grade and replaced with structural fill.

Most utility companies and City-County governments are now requiring that Type A-1 or A-1a (AASHTO Designation – basically granular soils with limited fines) soils be used as backfill over utilities. These organizations are also requiring that in public roadways the backfill over major utilities be compacted over the full depth of fill to at least 96 percent of the maximum dry density as determined by the AASHTO T-180 (ASTM D-1557) method of compaction. We recommend that as the major utilities continue onto the site that these compaction specifications are followed.

The natural fine-grained soils are not recommended for use as trench backfill.

5.3 SPREAD AND CONTINUOUS WALL FOUNDATIONS

5.3.1 Design Data

The proposed structure may be supported upon conventional spread and continuous wall foundations overlying suitable non-moisture sensitive native soils or structural fill extending to these soils. Under no circumstances should the footings be underlain by the potentially collapsible soils or non-engineered fill. For design, the following parameters are provided:

Minimum Recommended Depth of Embedment for Frost Protection	- 30 inches
Minimum Recommended Depth of Embedment for Non-frost Conditions	- 15 inches
Recommended Minimum Width for Continuous Wall Footings	- 18 inches

draft

Minimum Recommended Width for Isolated Spread Footings	- 24 inches
Recommended Net Bearing Pressure for Real Load Conditions	- 2,000 pounds per square foot
Bearing Pressure Increase for Seismic Loading	- 50 percent

The term "net bearing pressure" refers to the pressure imposed by the portion of the structure located above lowest adjacent final grade. Therefore, the weight of the footing and backfill to lowest adjacent final grade need not be considered. Real loads are defined as the total of all dead plus frequently applied live loads. Total load includes all dead and live loads, including seismic and wind.

5.3.2 Installation

Under no circumstances should the footings be established upon potentially collapsible soils, non-engineered fill, topsoil, loose or disturbed soils, sod, rubbish, other deleterious materials, frozen soils, or within ponded water. If unsuitable soils are encountered, they must be completely removed and replaced with compacted structural fill. If granular soils become loose or disturbed, they must be recompacted to the requirements for structural fill. It is anticipated that the depth and lateral distribution of potentially collapsible soils and non-engineered fill will vary throughout the site.

The width of structural replacement fill below footings should be equal to the width of the footing plus one foot for each foot of fill thickness. If the granular structural fills become loose or disturbed prior to pouring the footings, they must be appropriately compacted.

5.3.3 Settlements

Settlements of footings supporting the structures designed and installed in accordance with the above recommendations should not exceed one-half of an inch.

5.4 LATERAL RESISTANCE

Lateral loads imposed upon foundations due to wind or seismic forces may be resisted by the development of passive earth pressures and friction between the base of the footings and the supporting soils. In determining frictional resistance, a coefficient of 0.40 should be utilized. Passive resistance provided by properly placed and compacted granular structural fill above the water table may be considered equivalent to a fluid with a density of 300 pounds per cubic foot. Below the water table, this granular soil should be considered equivalent to a fluid with a density of 150 pounds per cubic foot.

draft

A combination of passive earth resistance and friction may be utilized provided that the friction component of the total is divided by 1.5.

5.5 LATERAL PRESSURES

Lateral pressures will be provided as building design and site layout become available.

5.6 FLOOR SLABS

To facilitate construction, we recommend that all at-grade slabs be immediately underlain by a minimum of four inches of "free-draining" granular material, such as "pea" gravel or three-quarter to one-inch minus clean gap-graded gravel. The gravel may be placed directly upon suitable non-moisture sensitive soil and/or granular structural fill extending to suitable non-moisture sensitive natural soil. Settlements of lightly loaded floor slabs will be negligible.

Under no circumstances should the floor slab be established upon potentially collapsible soil, non-engineered fill, loose or disturbed soils, sod, rubbish, topsoil, other deleterious materials, frozen soils, or within ponded water. Floor slab settlements are anticipated to be approximately one-quarter of an inch.

5.7 PAVEMENTS

The natural non-moisture sensitive soils, the potentially collapsible natural soils, and the non-engineered fill encountered at the site will exhibit poor pavement support characteristics when saturated or near saturated. Potentially collapsible soils and non-engineered fills must be removed in the rigid pavement areas and may remain in flexible pavement areas as long as they are less than two and one-half feet thick and are properly prepared as discussed previously in this report.

With the subgrade soils and the projected traffic as discussed in Section 2., Proposed Construction, the pavement sections on the following pages are recommended.

draft

Primary Roadway Areas

(Light Volume of Automobiles and Light Trucks,
Occasional Medium-Weight Trucks,
and No Heavy-Weight Trucks)
[1 equivalent 18-kip axle load per day]

Flexible:

3.0 inches	Asphalt concrete
7.0 inches	Aggregate base
12.0 inches	Granular subbase/structural site grading fill*
Over	Properly prepared potentially collapsible soils, properly prepared non-engineered fills, suitable natural soils and/or structural fill extending to suitable natural soils

* If potentially collapsible soils are not present no subbase is required.

Rigid:

5.0 inches	Portland cement concrete (non-reinforced)
4.0 inches	Aggregate base
Over	Suitable natural soils and/or structural fill extending to suitable natural soils**

** Under no circumstances shall rigid pavements be established overlying potentially collapsible soils and/or existing non-engineered fills, even if properly prepared.

draft

Primary Roadway Areas

(Moderate Volume of Automobiles and Light Trucks,
Moderate Volume of Medium-Weight Trucks,
and Occasional Heavy-Weight Trucks)
[5 equivalent 18-kip axle load per day]

Flexible:

3.5 inches	Asphalt concrete
8.0 inches	Aggregate base
12.0 inches	Granular subbase/structural site grading fill*
Over	Properly prepared potentially collapsible soils, properly prepared non-engineered fills, suitable natural soils and/or structural fill extending to suitable natural soils

* If potentially collapsible soils are not present no subbase is required.

Rigid:

6.0 inches	Portland cement concrete (non-reinforced)
4.0 inches	Aggregate base
Over	Suitable natural soils and/or structural fill extending to suitable natural soils**

** Under no circumstances shall rigid pavements be established overlying potentially collapsible soils and/or existing non-engineered fills, even if properly prepared.

For dumpster pads, we recommend a pavement section consisting of six and one-half inches of Portland cement concrete, four inches of aggregate base, over suitable natural non-moisture sensitive soils or structural site grading fills extending to suitable natural non-moisture sensitive soils.

These rigid pavement sections are for non-reinforced Portland cement concrete. Construction of the rigid pavement should be in sections 10 to 12 feet in width with construction or expansion joints or one-quarter depth saw-cuts on no more than 12-foot centers. Saw-cuts must be completed within 24 hours of the "initial set" of the concrete and should be performed under the

draft

direction of the concrete paving contractor. The concrete should have a minimum 28-day unconfined compressive strength of 4,000 pounds per square inch and contain 6 percent ±1 percent air-entrainment.

5.8 CEMENT TYPE

The chemical tests from study indicate that the tested soils contain a positive percentage of water-soluble sulfates. Based upon this data, Type II sulfate resistant cement will be required for concrete in contact with the site soils.

5.9 GEOSEISMIC SETTING

5.9.1 General

Utah municipalities adopted the International Building Code (IBC) 2006 on January 1, 2007. The IBC 2006 code determines the seismic hazard for a site based upon 2002 mapping of bedrock accelerations prepared by the United States Geologic Survey (USGS) and the soil site class. The USGS values are presented on maps incorporated into the IBC code and are also available based on latitude and longitude coordinates (grid points).

The structures must be designed in accordance with the procedure presented in Section 1613, Earthquake Loads, of the IBC 2006 edition.

5.9.2 Faulting

Based upon our review of available literature, no active faults are known to pass through or immediately adjacent to the site. The nearest active fault is the Wasatch Fault, which is located approximately six miles to the northeast.

5.9.3 Site Class

For dynamic structural analysis, the Site Class D –Soft Soil profile as defined in Table 1613.5.2, Site Class Definitions, of the IBC 2006 can be utilized.

5.9.4 Ground Motions

The IBC 2006 code is based on 2002 USGS (United States Geologic Survey) mapping, which provides values of short and long period accelerations for the Site Class B-C boundary for the Maximum Considered Earthquake (MCE). This Site Class B-C boundary represents a hypothetical bedrock surface and must be corrected for local soil conditions. The following table summarizes the peak ground and short and long period accelerations for a MCE event and incorporates a soil amplification factor for a Site Class D soil profile in the second column. Based on the site latitude and longitude (40.42952 degrees north and -111.91956 degrees west, respectively), the values for this site are tabulated on the following page.

draft

Spectral Acceleration Value, T Seconds	Site Class B-C Boundary [mapped values] (% g)	Site Class D [adjusted for site class effects] (% g)
Peak Ground Acceleration	45.2	47.4
0.2 Seconds, (Short Period Acceleration)	$S_S = 113.1$	$S_{MS} = 118.5$
1.0 Seconds (Long Period Acceleration)	$S_1 = 46.5$	$S_{M1} = 71.4$

The IBC 2006 code design accelerations (S_{DS} and S_{D1}) are based on multiplying the above accelerations (adjusted for site class effects) for the MCE event by two-thirds (⅔).

5.9.5 Liquefaction

Liquefaction is defined as the condition when saturated, loose, non-cohesive soils lose their support capabilities because of excessive pore water pressure which develops during a seismic event. Clayey soils, even if saturated, will not liquefy during a major seismic event.

Due to the lack of a shallow groundwater, the probability of liquefaction at the site during the design seismic event is considered low. Liquefaction potential will be evaluated during structure/site specific geotechnical analyses.

5.10 SITE OBSERVATIONS

As previously mentioned, collapsible soils appear to be present across much of the site to varying depths. Additionally, non-engineered fill was identified in isolated areas within the site. Therefore, we recommend that a qualified geotechnical engineer observe the building excavations to identify that all collapsible soils have been removed and that suitable soils have been completely encountered below the building footprint.

draft

We appreciate the opportunity of providing this service for you. If you have any questions or require additional information, please do not hesitate to contact us.

Respectfully submitted,

GSH Geotechnical Consultants, Inc. Reviewed by:

Alan D. Spilker, State of Utah No. 334228
Professional Engineer

Michael S. Huber, State of Utah No.343650
Professional Engineer

ADS/MSH:sn

Encl. Figure 1, Vicinity Map
Figure 2, Site Plan
Figure 3A through 3L, Log of Test pits
Figure 4, Unified Soil Classification System

Addressee (3)

draft

STATE OF UTAH-DFCM
JOB NO. 0128-008-07

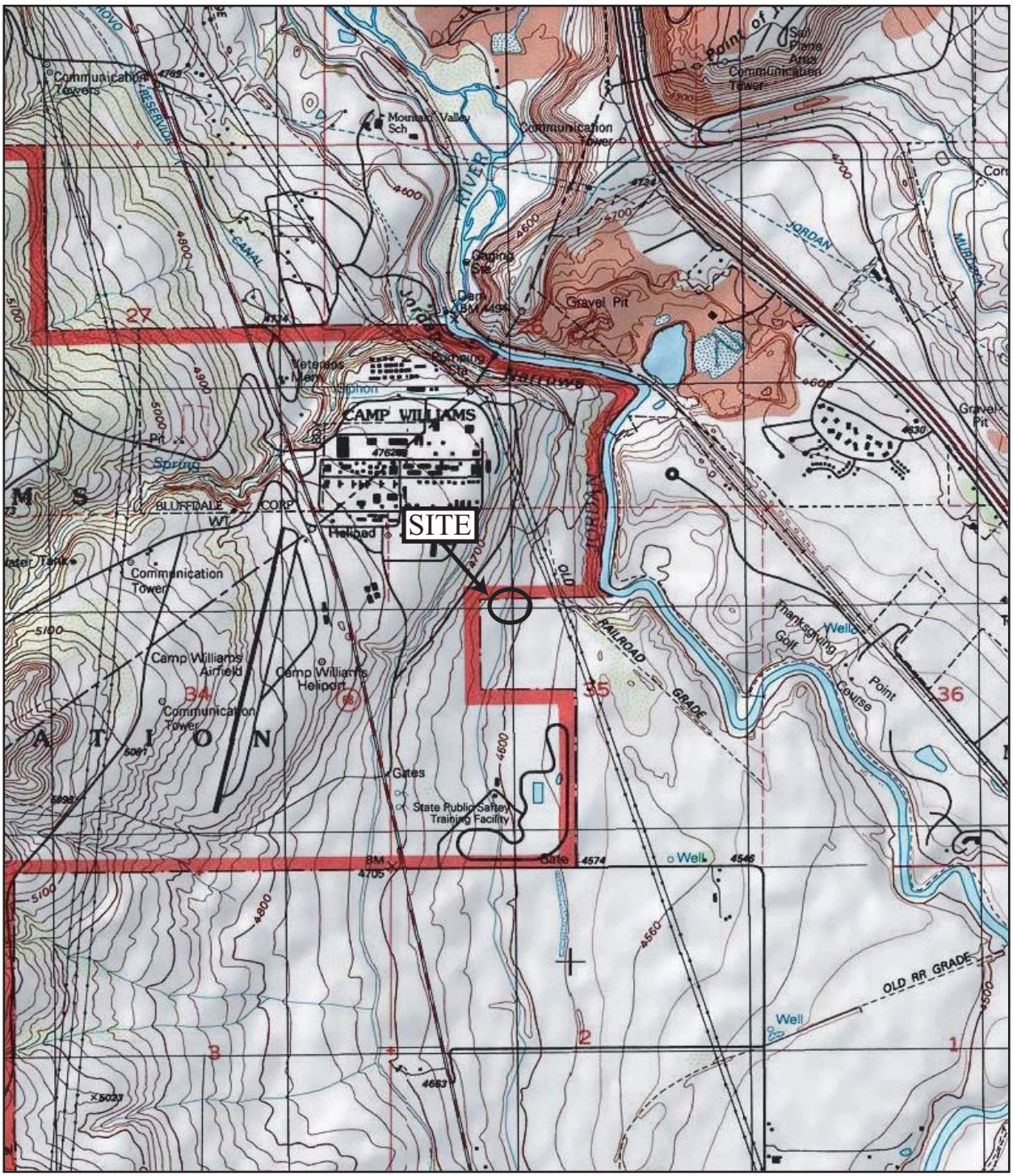

SCALE IN FEET
1000 0 1000 2000

FIGURE 1
VICINITY MAP

REFERENCE:
USGS 7.5 MINUTE TOPOGRAPHIC QUADRANGLE MAP
TITLED "JORDAN NARROWS, UTAH"
DATED 1999

GSH
Gordon Spilker Huber
Geotechnical Consultants, Inc.

STATE OF UTAH-DFCM
JOB NO. 0128-008-07

NOT TO SCALE

FIGURE 2
SITE PLAN

REFERENCE:
ADAPTED FROM USGS AERIAL PHOTOGRAPH ENTITLED
"SANDY, UTAH", DATED SEPTEMBER 18, 2003
DOWNLOADED FROM TERRASERVER

GSH
Gordon Spilker Huber
Geotechnical Consultants, Inc.

This Appendix contains specifications for this project.

SECTION 334100 - STORM UTILITY DRAINAGE PIPING

PART 1 - GENERAL

1.1 RELATED DOCUMENTS

A. Drawings and general provisions of the Contract, including General and Supplementary Conditions and Division 01 Specification Sections, apply to this Section.

1.2 SUMMARY

A. Section Includes:

1. Pipe and fittings.
2. Nonpressure transition couplings.
3. Pressure pipe couplings.
4. Expansion joints and deflection fittings.
5. Drains.
6. Encasement for piping.
7. Manholes.
8. Catch basins.
9. Stormwater inlets.
10. Stormwater detention structures.
11. Pipe outlets.
12. Stormwater disposal systems.

1.3 DEFINITIONS

A. FRP: Fiberglass-reinforced plastic.

1.4 ACTION SUBMITTALS

A. Product Data: For each type of product indicated.

B. Shop Drawings:

1. Manholes: Include plans, elevations, sections, details, frames, and covers.
2. Catch basins stormwater inlets. Include plans, elevations, sections, details, frames, covers, and grates.
3. Stormwater Detention Structures: Include plans, elevations, sections, details, frames, covers, design calculations, and concrete design-mix reports.

1.5 INFORMATIONAL SUBMITTALS

A. Coordination Drawings: Show pipe sizes, locations, and elevations. Show other piping in same trench and clearances from storm drainage system piping. Indicate interface and spatial relationship between manholes, piping, and proximate structures.

B. Product Certificates: For each type of cast-iron soil pipe and fitting, from manufacturer.

C. Field quality-control reports.

1.6 DELIVERY, STORAGE, AND HANDLING

A. Do not store plastic manholes, pipe, and fittings in direct sunlight.

B. Protect pipe, pipe fittings, and seals from dirt and damage.

C. Handle manholes according to manufacturer's written rigging instructions.

D. Handle catch basins and stormwater inlets according to manufacturer's written rigging instructions.

1.7 PROJECT CONDITIONS

A. Interruption of Existing Storm Drainage Service: Do not interrupt service to facilities occupied by Owner or others unless permitted under the following conditions and then only after arranging to provide temporary service according to requirements indicated:

1. Notify Architect no fewer than two days in advance of proposed interruption of service.
2. Do not proceed with interruption of service without Architect's written permission.

PART 2 - PRODUCTS

2.1 HUB-AND-SPIGOT, CAST-IRON SOIL PIPE AND FITTINGS

A. Pipe and Fittings: ASTM A 74, Service and Extra Heavy class

B. Gaskets: ASTM C 564, rubber.

C. Calking Materials: ASTM B 29, pure lead and oakum or hemp fiber.

2.2 HUBLESS CAST-IRON SOIL PIPE AND FITTINGS

A. Pipe and Fittings: ASTM A 888 or CISPI 301.

B. CISPI-Trademarked, Shielded Couplings:

1. Manufacturers: Subject to compliance with requirements, available manufacturers offering products that may be incorporated into the Work include, but are not limited to, the following]:

   a. ANACO-Husky.
   b. Dallas Specialty & Mfg. Co.
   c. Fernco Inc.
   d. Mission Rubber Company; a division of MCP Industries, Inc.
   e. Stant; a Tompkins company.
   f. Tyler Pipe.

2. Description: ASTM C 1277 and CISPI 310, with stainless-steel corrugated shield; stainless-steel bands and tightening devices; and ASTM C 564, rubber sleeve with integral, center pipe stop.

C. Heavy-Duty, Shielded Couplings:

1. Manufacturers: Subject to compliance with requirements, available manufacturers offering products that may be incorporated into the Work include, but are not limited to, the following:

   a. ANACO-Husky.
   b. Clamp-All Corp.
   c. Dallas Specialty & Mfg. Co.
   d. Mission Rubber Company; a division of MCP Industries, Inc.
   e. Stant; a Tompkins company.
   f. Tyler Pipe.

2. Description: ASTM C 1277 and ASTM C 1540, with stainless-steel shield; stainless-steel bands and tightening devices; and ASTM C 564, rubber sleeve with integral, center pipe stop.

D. Cast-Iron, Shielded Couplings:

1. Manufacturers: Subject to compliance with requirements, available manufacturers offering products that may be incorporated into the Work include, but are not limited to, the following:

   a. MG Piping Products Company.

2. Description: ASTM C 1277 and ASTM A 48/A 48M, two-piece, cast-iron housing; stainless-steel bolts and nuts; and ASTM C 564, rubber sleeve with integral, center pipe stop.

2.3 ABS PIPE AND FITTINGS

A. ABS Sewer Pipe and Fittings: ASTM D 2751, with bell-and-spigot ends for gasketed joints.

1. NPS 3 to NPS 6: SDR 35.
2. NPS 8 to NPS 12 SDR 42.

B. Gaskets: ASTM F 477, elastomeric seals.

2.4 PE PIPE AND FITTINGS

A. Corrugated PE Drainage Pipe and Fittings NPS 3 to NPS 10: AASHTO M 252M, Type S, with smooth waterway for coupling joints.

1. Silttight Couplings: PE sleeve with ASTM D 1056, Type 2, Class A, Grade 2 gasket material that mates with tube and fittings.
2. Soiltight Couplings: AASHTO M 252M, corrugated, matching tube and fittings.

B. Corrugated PE Pipe and Fittings NPS 12 to NPS 60: AASHTO M 294M, Type S, with smooth waterway for coupling joints.

1. Silttight Couplings: PE sleeve with ASTM D 1056, Type 2, Class A, Grade 2 gasket material that mates with pipe and fittings.
2. Soiltight Couplings: AASHTO M 294M, corrugated, matching pipe and fittings.

2.5 PVC PIPE AND FITTINGS

A. PVC Cellular-Core Piping:

1. PVC Cellular-Core Pipe and Fittings: ASTM F 891, Sewer and Drain Series, PS 50 minimum stiffness, PVC cellular-core pipe with plain ends for solvent-cemented joints.
2. Fittings: ASTM D 3034, SDR 35, PVC socket-type fittings.

B. PVC Corrugated Sewer Piping:

1. Pipe: ASTM F 949, PVC, corrugated pipe with bell-and-spigot ends for gasketed joints.
2. Fittings: ASTM F 949, PVC molded or fabricated, socket type.
3. Gaskets: ASTM F 477, elastomeric seals.

C. PVC Profile Sewer Piping:

1. Pipe: ASTM F 794, PVC profile, gravity sewer pipe with bell-and-spigot ends for gasketed joints.
2. Fittings: ASTM D 3034, PVC with bell ends.

3. Gaskets: ASTM F 477, elastomeric seals.

D. PVC Type PSM Sewer Piping:

1. Pipe: ASTM D 3034, SDR 35, PVC Type PSM sewer pipe with bell-and-spigot ends for gasketed joints.
2. Fittings: ASTM D 3034, PVC with bell ends.
3. Gaskets: ASTM F 477, elastomeric seals.

E. PVC Gravity Sewer Piping:

1. Pipe and Fittings: ASTM F 679, [T-1] [T-2] wall thickness, PVC gravity sewer pipe with bell-and-spigot ends and with integral ASTM F 477, elastomeric seals for gasketed joints.

F. PVC Pressure Piping:

1. Pipe: AWWA C900, Class 200 PVC pipe with bell-and-spigot ends for gasketed joints.
2. Fittings: AWWA C900, Class 200 PVC pipe with bell ends
3. Gaskets: ASTM F 477, elastomeric seals.

G. PVC Water-Service Piping:

1. Pipe: ASTM D 1785, Schedule 40 PVC, with plain ends for solvent-cemented joints.
2. Fittings: ASTM D 2466, Schedule 40 PVC, socket type.

2.6 CONCRETE PIPE AND FITTINGS

A. Nonreinforced-Concrete Sewer Pipe and Fittings: ASTM C 14 Class 3, with bell-and-spigot ends and gasketed joints with ASTM C 443, rubber gaskets bitumen or butyl-rubber sealant].

B. Reinforced-Concrete Sewer Pipe and Fittings: ASTM C 76.

1. Bell-and-spigot ends and gasketed joints with ASTM C 443 bitumen or butyl-rubber sealant
2. Class III, Wall C.

2.7 DRAINS

A. Cast-Iron Area Drains:

1. Manufacturers: Subject to compliance with requirements, available manufacturers offering products that may be incorporated into the Work include, but are not limited to, the following:

a. Josam Company.
b. MIFAB, Inc.
c. Smith, Jay R. Mfg. Co.
d. Tyler Pipe.
e. Watts Water Technologies, Inc.
f. Zurn Specification Drainage Operation; Zurn Plumbing Products Group.

2. Description: ASME A112.6.3 gray-iron round body with anchor flange and round secured grate. Include bottom outlet with inside calk or spigot connection, of sizes indicated.
3. Top-Loading Classifications Medium and Heavy Duty

2.8 ENCASEMENT FOR PIPING

A. Standard: ASTM A 674 or AWWA C105.

B. Material: Linear low-density polyethylene film of 0.008-inch minimum thickness.

C. Form: sheet.

D. Color: Black

2.9 MANHOLES

A. Standard Precast Concrete Manholes:

1. Description: ASTM C 478, precast, reinforced concrete, of depth indicated, with provision for sealant joints.
2. Diameter: 48 inches minimum unless otherwise indicated.
3. Ballast: Increase thickness of precast concrete sections or add concrete to base section as required to prevent flotation.
4. Base Section: 6-inch minimum thickness for floor slab and 4-inch (102-mm) minimum thickness for walls and base riser section, and separate base slab or base section with integral floor.
5. Riser Sections: 4-inch minimum thickness, and lengths to provide depth indicated.
6. Top Section: Eccentric-cone type unless concentric-cone or flat-slab-top type is indicated, and top of cone of size that matches grade rings.
7. Joint Sealant: ASTM C 990 bitumen or butyl rubber.
8. Resilient Pipe Connectors: ASTM C 923 cast or fitted into manhole walls, for each pipe connection.
9. Adjusting Rings: Interlocking HDPE rings with level or sloped edge in thickness and diameter matching manhole frame and cover, and of height required to adjust manhole frame and cover to indicated elevation and slope. Include sealant recommended by ring manufacturer.

10. Grade Rings: Reinforced-concrete rings, 6- to 9-inch total thickness, to match diameter of manhole frame and cover, and height as required to adjust manhole frame and cover to indicated elevation and slope.

B. Designed Precast Concrete Manholes:

1. Description: ASTM C 913; designed according to ASTM C 890 for A-16 (AASHTO HS20-44), heavy-traffic, structural loading; of depth, shape, and dimensions indicated, with provision for sealant joints.
2. Ballast: Increase thickness of one or more precast concrete sections or add concrete to manhole as required to prevent flotation.
3. Joint Sealant: ASTM C 990 bitumen or butyl rubber.
4. Resilient Pipe Connectors: ASTM C 923, cast or fitted into manhole walls, for each pipe connection.
5. Adjusting Rings: Interlocking HDPE rings with level or sloped edge in thickness and diameter matching manhole frame and cover, and of height required to adjust manhole frame and cover to indicated elevation and slope. Include sealant recommended by ring manufacturer.
6. Grade Rings: Reinforced-concrete rings, 6- to 9-inch total thickness, to match diameter of manhole frame and cover, and of height required to adjust manhole frame and cover to indicated elevation and slope.

C. Manhole Frames and Covers:

1. Description: Ferrous; 24-inch ID by 7- to 9-inch riser with 4-inch- minimum width flange and 26-inch- diameter cover. Include indented top design with lettering cast into cover, using wording equivalent to "STORM SEWER."
2. Material: ASTM A 536, Grade 60-40-18 ductile iron unless otherwise indicated.

2.10 CONCRETE

A. General: Cast-in-place concrete according to ACI 318, and the following:

1. Cement: ASTM C 150, Type II.
2. Fine Aggregate: ASTM C 33, sand.
3. Coarse Aggregate: ASTM C 33, crushed gravel.
4. Water: Potable.

B. Portland Cement Design Mix: 4000 psi minimum, with 0.45 maximum water/cementitious materials ratio.

1. Reinforcing Fabric: ASTM A 185/A 185M, steel, welded wire fabric, plain.
2. Reinforcing Bars: ASTM A 615/A 615M, Grade 60 (420 MPa) deformed steel.

C. Manhole Channels and Benches: Factory or field formed from concrete. Portland cement design mix, 4000 psi minimum, with 0.45 maximum water/cementitious materials ratio. Include channels and benches in manholes.

D. Ballast and Pipe Supports: Portland cement design mix, 3000 psi minimum, with 0.58 maximum water/cementitious materials ratio.

1. Reinforcing Fabric: ASTM A 185/A 185M, steel, welded wire fabric, plain.
2. Reinforcing Bars: ASTM A 615/A 615M, Grade 60 (420 MPa) deformed steel.

2.11 CATCH BASINS

A. Standard Precast Concrete Catch Basins:

1. Description: ASTM C 478, precast, reinforced concrete, of depth indicated, with provision for sealant joints.
2. Base Section: 6-inch minimum thickness for floor slab and 4-inch minimum thickness for walls and base riser section, and separate base slab or base section with integral floor.
3. Riser Sections: 4-inch minimum thickness, 48-inch diameter, and lengths to provide depth indicated.
4. Top Section: Eccentric-cone type unless concentric-cone or flat-slab-top type is indicated. Top of cone of size that matches grade rings.
5. Joint Sealant: ASTM C 990, bitumen or butyl rubber.
6. Adjusting Rings: Interlocking rings with level or sloped edge in thickness and shape matching catch basin frame and grate. Include sealant recommended by ring manufacturer.
7. Grade Rings: Include two or three reinforced-concrete rings, of 6- to 9-inch total thickness, that match 24-inch- diameter frame and grate.
8. Pipe Connectors: ASTM C 923 resilient, of size required, for each pipe connecting to base section.

B. Designed Precast Concrete Catch Basins: ASTM C 913, precast, reinforced concrete; designed according to ASTM C 890 for A-16 (ASSHTO HS20-44), heavy-traffic, structural loading; of depth, shape, and dimensions indicated, with provision for joint sealants.

1. Joint Sealants: ASTM C 990 bitumen or butyl rubber.
2. Adjusting Rings: Interlocking rings with level or sloped edge in thickness and shape matching catch basin frame and grate. Include sealant recommended by ring manufacturer.
3. Grade Rings: Include two or three reinforced-concrete rings, of 6- to 9- total thickness, that match 24-inch- diameter frame and grate.
4. Pipe Connectors: ASTM C 923 resilient, of size required, for each pipe connecting to base section.

C. Frames and Grates: ASTM A 536, Grade 60-40-18, ductile iron designed for A-16, structural loading. Include flat grate with small square or short-slotted drainage openings.

1. Size: 24 by 24 inches minimum unless otherwise indicated.
2. Grate Free Area: Approximately 50 percent unless otherwise indicated.

D. Frames and Grates: ASTM A 536, Grade 60-40-18, ductile iron designed for A-16, structural loading. Include 24-inch ID by 7- to 9-inch riser with 4-inch minimum width flange, and 26-inch- diameter flat grate with small square or short-slotted drainage openings.

1. Grate Free Area: Approximately 50 percent unless otherwise indicated.

2.12 STORMWATER INLETS

A. Curb Inlets: Made with vertical curb opening of materials and dimensions according to utility standards.

B. Gutter Inlets: Made with horizontal gutter opening of materials and dimensions according to utility standards. Include heavy-duty frames and grates.

C. Combination Inlets: Made with vertical curb and horizontal gutter openings of materials and dimensions according to utility standards. Include heavy-duty frames and grates.

D. Frames and Grates: Heavy duty according to utility standards.

2.13 PIPE OUTLETS

A. Head Walls: Cast-in-place reinforced concrete, with apron and tapered sides.

B. Riprap Basins: Broken, irregularly sized and shaped, graded stone according to NSSGA's "Quarried Stone for Erosion and Sediment Control."

1. Average Size: NSSGA No. R-3, screen opening 2 inches.
2. Average Size: NSSGA No. R-4, screen opening 3 inches.
3. Average Size: NSSGA No. R-5, screen opening 5 inches.

C. Filter Stone: According to NSSGA's "Quarried Stone for Erosion and Sediment Control," No. FS-2, No. 4 screen opening, average-size graded stone.

D. Energy Dissipaters: According to NSSGA's "Quarried Stone for Erosion and Sediment Control," No. A-1, 3-ton average weight armor stone, unless otherwise indicated.

PART 3 - EXECUTION

3.1 EARTHWORK

A. Excavation, trenching, and backfilling are specified in Section 312000 "Earth Moving."

3.2 PIPING INSTALLATION

A. General Locations and Arrangements: Drawing plans and details indicate general location and arrangement of underground storm drainage piping. Location and arrangement of piping layout take into account design considerations. Install piping as indicated, to extent practical. Where specific installation is not indicated, follow piping manufacturer's written instructions.

B. Install piping beginning at low point, true to grades and alignment indicated with unbroken continuity of invert. Place bell ends of piping facing upstream. Install gaskets, seals, sleeves, and couplings according to manufacturer's written instructions for use of lubricants, cements, and other installation requirements.

C. Install manholes for changes in direction unless fittings are indicated. Use fittings for branch connections unless direct tap into existing sewer is indicated.

D. Install proper size increasers, reducers, and couplings where different sizes or materials of pipes and fittings are connected. Reducing size of piping in direction of flow is prohibited.

E. When installing pipe under streets or other obstructions that cannot be disturbed, use pipe-jacking process of microtunneling.

F. Install gravity-flow, nonpressure drainage piping according to the following:

1. Install piping pitched down in direction of flow.
2. Install piping NPS 6 and larger with restrained joints at tee fittings and at changes in direction. Use corrosion-resistant rods, pipe or fitting manufacturer's proprietary restraint system, or cast-in-place concrete supports or anchors.
3. Install piping with 36-inch minimum cover.
4. Install hub-and-spigot, cast-iron soil piping according to CISPI's "Cast Iron Soil Pipe and Fittings Handbook."
5. Install hubless cast-iron soil piping according to CISPI 310 and CISPI's "Cast Iron Soil Pipe and Fittings Handbook."
6. Install ductile-iron piping and special fittings according to AWWA C600 or AWWA M41.
7. Install corrugated steel piping according to ASTM A 798/A 798M.
8. Install corrugated aluminum piping according to ASTM B 788/B 788M.
9. Install ABS sewer piping according to ASTM D 2321 and ASTM F 1668.
10. Install PE corrugated sewer piping according to ASTM D 2321.
11. Install PVC cellular-core piping according to ASTM D 2321 and ASTM F 1668.
12. Install PVC sewer piping according to ASTM D 2321 and ASTM F 1668.
13. Install PVC profile gravity sewer piping according to ASTM D 2321 and ASTM F 1668.
14. Install PVC water-service piping according to ASTM D 2321 and ASTM F 1668.
15. Install fiberglass sewer piping according to ASTM D 3839 and ASTM F 1668.
16. Install nonreinforced-concrete sewer piping according to ASTM C 1479 and ACPA's "Concrete Pipe Installation Manual."

17. Install reinforced-concrete sewer piping according to ASTM C 1479 and ACPA's "Concrete Pipe Installation Manual."

G. Install force-main pressure piping according to the following:

1. Install piping with restrained joints at tee fittings and at horizontal and vertical changes in direction. Use corrosion-resistant rods, pipe or fitting manufacturer's proprietary restraint system, or cast-in-place concrete supports or anchors.
2. Install piping with 36-inch minimum cover.
3. Install ductile-iron pressure piping according to AWWA C600 or AWWA M41.
4. Install ductile-iron special fittings according to AWWA C600.
5. Install PVC pressure piping according to AWWA M23, or ASTM D 2774 and ASTM F 1668.
6. Install PVC water-service piping according to ASTM D 2774 and ASTM F 1668.

H. Install corrosion-protection piping encasement over the following underground metal piping according to ASTM A 674 or AWWA C105:

1. Hub-and-spigot, cast-iron soil pipe and fittings.
2. Hubless cast-iron soil pipe and fittings.
3. Ductile-iron pipe and fittings.
4. Expansion joints and deflection fittings.

3.3 PIPE JOINT CONSTRUCTION

A. Join gravity-flow, nonpressure drainage piping according to the following:

1. Join hub-and-spigot, cast-iron soil piping with gasketed joints according to CISPI's "Cast Iron Soil Pipe and Fittings Handbook" for compression joints.
2. Join hub-and-spigot, cast-iron soil piping with calked joints according to CISPI's "Cast Iron Soil Pipe and Fittings Handbook" for lead and oakum calked joints.
3. Join hubless cast-iron soil piping according to CISPI 310 and CISPI's "Cast Iron Soil Pipe and Fittings Handbook" for hubless-coupling joints.
4. Join ductile-iron culvert piping according to AWWA C600 for push-on joints.
5. Join ductile-iron piping and special fittings according to AWWA C600 or AWWA M41.
6. Join corrugated steel sewer piping according to ASTM A 798/A 798M.
7. Join corrugated aluminum sewer piping according to ASTM B 788/B 788M.
8. Join ABS sewer piping according to ASTM D 2321 and ASTM D 2751 for elastomeric-seal joints.
9. Join corrugated PE piping according to ASTM D 3212 for push-on joints.
10. Join PVC cellular-core piping according to ASTM D 2321 and ASTM F 891 for solvent-cemented joints.
11. Join PVC corrugated sewer piping according to ASTM D 2321 for elastomeric-seal joints.
12. Join PVC sewer piping according to ASTM D 2321 and ASTM D 3034 for elastomeric-seal joints or ASTM D 3034 for elastomeric-gasketed joints.

13. Join PVC profile gravity sewer piping according to ASTM D 2321 for elastomeric-seal joints or ASTM F 794 for gasketed joints.
14. Join fiberglass sewer piping according to ASTM D 3839 for elastomeric-seal joints.
15. Join nonreinforced-concrete sewer piping according to ASTM C 14 and ACPA's "Concrete Pipe Installation Manual" for rubber-gasketed joints.
16. Join reinforced-concrete sewer piping according to ACPA's "Concrete Pipe Installation Manual" for rubber-gasketed joints.
17. Join dissimilar pipe materials with nonpressure-type flexible couplings.

B. Join force-main pressure piping according to the following:

1. Join ductile-iron pressure piping according to AWWA C600 or AWWA M41 for push-on joints.
2. Join ductile-iron special fittings according to AWWA C600 or AWWA M41 for push-on joints.
3. Join PVC pressure piping according to AWWA M23 for gasketed joints.
4. Join PVC water-service piping according to ASTM D 2855 for solvent-cemented joints.
5. Join dissimilar pipe materials with pressure-type couplings.

3.4 DRAIN INSTALLATION

A. Install type of drains in locations indicated.

1. Use Light-Duty, top-loading classification drains in earth or unpaved foot-traffic areas.
2. Use Medium-Duty, top-loading classification drains in paved foot areas.
3. Use Heavy-Duty, top-loading classification drains in vehicle-traffic service areas.
4. Use Extra-Heavy-Duty, top-loading classification drains in roads.

B. Embed drains in 4-inch minimum concrete around bottom and sides.

C. Fasten grates to drains if indicated.

D. Set drain frames and covers with tops flush with pavement surface.

E. Assemble trench sections with flanged joints.

F. Embed trench sections in 4-inch minimum concrete around bottom and sides.

3.5 MANHOLE INSTALLATION

A. General: Install manholes, complete with appurtenances and accessories indicated.

B. Install precast concrete manhole sections with sealants according to ASTM C 891.

C. Where specific manhole construction is not indicated, follow manhole manufacturer's written instructions.

D. Set tops of frames and covers flush with finished surface of manholes that occur in pavements. Set tops 3 inches above finished surface elsewhere unless otherwise indicated.

3.6 CATCH BASIN INSTALLATION

A. Construct catch basins to sizes and shapes indicated.

B. Set frames and grates to elevations indicated.

3.7 STORMWATER INLET AND OUTLET INSTALLATION

A. Construct inlet head walls, aprons, and sides of reinforced concrete, as indicated.

B. Construct riprap of broken stone, as indicated.

C. Install outlets that spill onto grade, anchored with concrete, where indicated.

D. Install outlets that spill onto grade, with flared end sections that match pipe, where indicated.

E. Construct energy dissipaters at outlets, as indicated.

3.8 CONCRETE PLACEMENT

A. Place cast-in-place concrete according to ACI 318.

3.9 STORMWATER DISPOSAL SYSTEM INSTALLATION

A. Chamber Systems: Excavate trenches of width and depth, and install system and backfill according to chamber manufacturer's written instructions. Include storage and leaching chambers, filtering material, and filter mat.

B. Piping Systems: Excavate trenches of width and depth, and install piping system, filter fabric, and backfill, according to piping manufacturer's written instructions.

3.10 CONNECTIONS

A. Connect nonpressure, gravity-flow drainage piping in building's storm building drains specified in Section 221413 "Facility Storm Drainage Piping."

B. Connect force-main piping to building's storm drainage force mains specified in Section 221413 "Facility Storm Drainage Piping." Terminate piping where indicated.

C. Make connections to existing piping and underground manholes.

1. Use commercially manufactured wye fittings for piping branch connections. Remove section of existing pipe; install wye fitting into existing piping; and encase entire wye fitting, plus 6-inch overlap, with not less than 6 inches of concrete with 28-day compressive strength of 3000 psi.
2. Make branch connections from side into existing piping, NPS 4 to NPS 20. Remove section of existing pipe, install wye fitting into existing piping, and encase entire wye with not less than 6 inches of concrete with 28-day compressive strength of 3000 psi
3. Make branch connections from side into existing piping, NPS 21 or larger, or to underground manholes and structures by cutting into existing unit and creating an opening large enough to allow 3 inches of concrete to be packed around entering connection. Cut end of connection pipe passing through pipe or structure wall to conform to shape of and be flush with inside wall unless otherwise indicated. On outside of pipe, manhole, or structure wall, encase entering connection in 6 inches of concrete for minimum length of 12 inches to provide additional support of collar from connection to undisturbed ground.

   a. Use concrete that will attain a minimum 28-day compressive strength of 3000 psi unless otherwise indicated.
   b. Use epoxy-bonding compound as interface between new and existing concrete and piping materials.

4. Protect existing piping, manholes, and structures to prevent concrete or debris from entering while making tap connections. Remove debris or other extraneous material that may accumulate.

D. Connect to sediment interceptors specified in Section 221323 "Sanitary Waste Interceptors."

E. Pipe couplings, expansion joints, and deflection fittings with pressure ratings at least equal to piping rating may be used in applications below unless otherwise indicated.

1. Use nonpressure-type flexible couplings where required to join gravity-flow, nonpressure sewer piping unless otherwise indicated.

   a. Unshielded flexible couplings for same or minor difference OD pipes.
   b. Unshielded, increaser/reducer-pattern, flexible couplings for pipes with different OD.
   c. Ring-type flexible couplings for piping of different sizes where annular space between smaller piping's OD and larger piping's ID permits installation.

2. Use pressure-type pipe couplings for force-main joints.

3.11 IDENTIFICATION

A. Materials and their installation are specified in Section 312000 "Earth Moving." Arrange for installation of green warning tape directly over piping and at outside edge of underground structures.

1. Use warning tape or detectable warning tape over ferrous piping.
2. Use detectable warning tape over nonferrous piping and over edges of underground structures.

3.12 FIELD QUALITY CONTROL

A. Inspect interior of piping to determine whether line displacement or other damage has occurred. Inspect after approximately 24 inches of backfill is in place, and again at completion of Project.

1. Submit separate reports for each system inspection.
2. Defects requiring correction include the following:

a. Alignment: Less than full diameter of inside of pipe is visible between structures.
b. Deflection: Flexible piping with deflection that prevents passage of ball or cylinder of size not less than 92.5 percent of piping diameter.
c. Damage: Crushed, broken, cracked, or otherwise damaged piping.
d. Infiltration: Water leakage into piping.
e. Exfiltration: Water leakage from or around piping.

3. Replace defective piping using new materials, and repeat inspections until defects are within allowances specified.
4. Reinspect and repeat procedure until results are satisfactory.

B. Test new piping systems, and parts of existing systems that have been altered, extended, or repaired, for leaks and defects.

1. Do not enclose, cover, or put into service before inspection and approval.
2. Test completed piping systems according to requirements of authorities having jurisdiction.
3. Schedule tests and inspections by authorities having jurisdiction with at least 24 hours' advance notice.
4. Submit separate report for each test.
5. Gravity-Flow Storm Drainage Piping: Test according to requirements of authorities having jurisdiction, UNI-B-6, and the following:

a. Exception: Piping with soiltight joints unless required by authorities having jurisdiction.
b. Option: Test plastic piping according to ASTM F 1417.
c. Option: Test concrete piping according to ASTM C 924.

6. Force-Main Storm Drainage Piping: Perform hydrostatic test after thrust blocks, supports, and anchors have hardened. Test at pressure not less than 1-1/2 times the maximum system operating pressure, but not less than 150 psig

    a. Ductile-Iron Piping: Test according to AWWA C600, "Hydraulic Testing" Section.
    b. PVC Piping: Test according to AWWA M23, "Testing and Maintenance" Chapter.

C. Leaks and loss in test pressure constitute defects that must be repaired.

D. Replace leaking piping using new materials, and repeat testing until leakage is within allowances specified.

3.13 CLEANING

A. Clean interior of piping of dirt and superfluous materials flush with potable water

END OF SECTION 334100

SECTION 330500 - COMMON WORK RESULTS FOR UTILITIES

PART 1 - GENERAL

1.1 RELATED DOCUMENTS

A. Drawings and general provisions of the Contract, including General and Supplementary Conditions and Division 01 Specification Sections, apply to this Section.

1.2 SUMMARY

A. This Section includes the following:

1. Piping joining materials.
2. Transition fittings.
3. Dielectric fittings.
4. Sleeves.
5. Identification devices.
6. Grout.
7. Flowable fill.
8. Piped utility demolition.
9. Piping system common requirements.
10. Equipment installation common requirements.
11. Painting.
12. Concrete bases.
13. Metal supports and anchorages.

1.3 DEFINITIONS

A. Exposed Installations: Exposed to view outdoors or subject to outdoor ambient temperatures and weather conditions.

B. Concealed Installations: Concealed from view and protected from weather conditions and physical contact by building occupants but subject to outdoor ambient temperatures. Examples include installations within unheated shelters.

C. ABS: Acrylonitrile-butadiene-styrene plastic.

D. CPVC: Chlorinated polyvinyl chloride plastic.

E. PE: Polyethylene plastic.

F. PVC: Polyvinyl chloride plastic.

1.4 ACTION SUBMITTALS

A. Product Data: For the following:

1. Dielectric fittings.
2. Identification devices.

1.5 INFORMATIONAL SUBMITTALS

A. Welding certificates.

1.6 QUALITY ASSURANCE

A. Steel Support Welding: Qualify procedures and personnel according to AWS D1.1/D1.1M, "Structural Welding Code - Steel."

B. Steel Piping Welding: Qualify processes and operators according to ASME Boiler and Pressure Vessel Code: Section IX, "Welding and Brazing Qualifications."

1. Comply with provisions in ASME B31 Series, "Code for Pressure Piping."
2. Certify that each welder has passed AWS qualification tests for welding processes involved and that certification is current.

C. Comply with ASME A13.1 for lettering size, length of color field, colors, and viewing angles of identification devices.

1.7 DELIVERY, STORAGE, AND HANDLING

A. Deliver pipes and tubes with factory-applied end caps. Maintain end caps through shipping, storage, and handling to prevent pipe end damage and to prevent entrance of dirt, debris, and moisture.

B. Store plastic pipes protected from direct sunlight. Support to prevent sagging and bending.

1.8 COORDINATION

A. Coordinate installation of required supporting devices and set sleeves in poured-in-place concrete and other structural components as they are constructed.

B. Coordinate installation of identifying devices after completing covering and painting if devices are applied to surfaces.

C. Coordinate size and location of concrete bases. Formwork, reinforcement, and concrete requirements are specified in Section 033000 "Cast-in-Place Concrete."

PART 2 - PRODUCTS

2.1 PIPING JOINING MATERIALS

A. Pipe-Flange Gasket Materials: Suitable for chemical and thermal conditions of piping system contents.

1. ASME B16.21, nonmetallic, flat, asbestos free, 1/8-inch maximum thickness, unless otherwise indicated.

a. Full-Face Type: For flat-face, Class 125, cast-iron and cast-bronze flanges.
b. Narrow-Face Type: For raised-face, Class 250, cast-iron and steel flanges.

2. AWWA C110, rubber, flat face, 1/8 inch thick, unless otherwise indicated; and full-face or ring type, unless otherwise indicated.

B. Flange Bolts and Nuts: ASME B18.2.1, carbon steel, unless otherwise indicated.

C. Plastic, Pipe-Flange Gasket, Bolts, and Nuts: Type and material recommended by piping system manufacturer, unless otherwise indicated.

D. Solder Filler Metals: ASTM B 32, lead-free alloys. Include water-flushable flux according to ASTM B 813.

E. Brazing Filler Metals: AWS A5.8, BCuP Series, copper-phosphorus alloys for general-duty brazing, unless otherwise indicated; and AWS A5.8, BAg1, silver alloy for refrigerant piping, unless otherwise indicated.

F. Welding Filler Metals: Comply with AWS D10.12/D10.12M for welding materials appropriate for wall thickness and chemical analysis of steel pipe being welded.

G. Solvent Cements for Joining Plastic Piping:

1. ABS Piping: ASTM D 2235.
2. CPVC Piping: ASTM F 493.
3. PVC Piping: ASTM D 2564. Include primer according to ASTM F 656.
4. PVC to ABS Piping Transition: ASTM D 3138.

H. Fiberglass Pipe Adhesive: As furnished or recommended by pipe manufacturer.

2.2 TRANSITION FITTINGS

A. Transition Fittings, General: Same size as, and with pressure rating at least equal to and with ends compatible with, piping to be joined.

B. Transition Couplings NPS 1-1/2 and Smaller:

1. Underground Piping: Manufactured piping coupling or specified piping system fitting.
2. Aboveground Piping: Specified piping system fitting.

C. AWWA Transition Couplings NPS 2 and Larger:

1. Available Manufacturers: Subject to compliance with requirements, manufacturers offering products that may be incorporated into the Work include, but are not limited to, the following:

   a. Cascade Waterworks Mfg. Co.
   b. Dresser, Inc.; DMD Div.
   c. Ford Meter Box Company, Inc. (The); Pipe Products Div.
   d. JCM Industries.
   e. Smith-Blair, Inc.
   f. Viking Johnson.

2. Description: AWWA C219, metal sleeve-type coupling for underground pressure piping.

D. Plastic-to-Metal Transition Fittings:

1. Available Manufacturers: Subject to compliance with requirements, manufacturers offering products that may be incorporated into the Work include, but are not limited to, the following:

   a. Spears Manufacturing Co.

2. Description: CPVC and PVC one-piece fitting with manufacturer's Schedule 80 equivalent dimensions; one end with threaded brass insert, and one solvent-cement-joint end.

E. Plastic-to-Metal Transition Unions:

1. Available Manufacturers: Subject to compliance with requirements, manufacturers offering products that may be incorporated into the Work include, but are not limited to, the following:

   a. Colonial Engineering, Inc.
   b. NIBCO INC.
   c. Spears Manufacturing Co.

2. Description: MSS SP-107, CPVC and PVC four-part union. Include brass threaded end, solvent-cement-joint or threaded plastic end, rubber O-ring, and union nut.

F. Flexible Transition Couplings for Underground Nonpressure Drainage Piping:

1. Available Manufacturers: Subject to compliance with requirements, manufacturers offering products that may be incorporated into the Work include, but are not limited to, the following:

a. Cascade Waterworks Mfg. Co.
b. Fernco, Inc.
c. Mission Rubber Company.
d. Plastic Oddities.

2. Description: ASTM C 1173 with elastomeric sleeve, ends same size as piping to be joined, and corrosion-resistant metal band on each end.

2.3 DIELECTRIC FITTINGS

A. Dielectric Fittings, General: Assembly of copper alloy and ferrous materials or ferrous material body with separating nonconductive insulating material suitable for system fluid, pressure, and temperature.

B. Dielectric Unions:

1. Available Manufacturers: Subject to compliance with requirements, manufacturers offering products that may be incorporated into the Work include, but are not limited to, the following:

a. Capitol Manufacturing Co.
b. Central Plastics Company.
c. Epco Sales, Inc.
d. Hart Industries, International, Inc.
e. Watts Water Technologies, Inc.
f. Zurn Plumbing Products Group; Wilkins Div.

2. Description: Factory fabricated, union, NPS 2 and smaller.

a. Pressure Rating: [150 psig minimum] [250 psig] at 180 deg F
b. End Connections: Solder-joint copper alloy and threaded ferrous; threaded ferrous.

C. Dielectric Flanges:

1. Available Manufacturers: Subject to compliance with requirements, manufacturers offering products that may be incorporated into the Work include, but are not limited to, the following:

a. Capitol Manufacturing Co.
b. Central Plastics Company.
c. Epco Sales, Inc.
d. Watts Water Technologies, Inc.

2. Description: Factory-fabricated, bolted, companion-flange assembly, NPS 2-1/2 to NPS 4 and larger.

a. Pressure Rating: [150 psig minimum] [175 psig minimum] [300 psig.
b. End Connections: Solder-joint copper alloy and threaded ferrous; threaded solder-joint copper alloy and threaded ferrous.

D. Dielectric-Flange Kits:

1. Available Manufacturers: Subject to compliance with requirements, manufacturers offering products that may be incorporated into the Work include, but are not limited to, the following:

   a. Advance Products & Systems, Inc.
   b. Calpico, Inc.
   c. Central Plastics Company.
   d. Pipeline Seal and Insulator, Inc.

2. Description: Nonconducting materials for field assembly of companion flanges, NPS 2-1/2 and larger.

   a. Pressure Rating: 150 psig minimum
   b. Gasket: Neoprene or phenolic.
   c. Bolt Sleeves: Phenolic or polyethylene.
   d. Washers: Phenolic with steel backing washers.

E. Dielectric Couplings:

1. Available Manufacturers: Subject to compliance with requirements, manufacturers offering products that may be incorporated into the Work include, but are not limited to, the following:

   a. Calpico, Inc.
   b. Lochinvar Corporation.

2. Description: Galvanized-steel coupling with inert and noncorrosive, thermoplastic lining, NPS 3 and smaller.

   a. Pressure Rating: 300 psig at 225 deg F
   b. End Connections: Threaded.

F. Dielectric Nipples:

1. Available Manufacturers: Subject to compliance with requirements, manufacturers offering products that may be incorporated into the Work include, but are not limited to, the following:

   a. Perfection Corporation.
   b. Precision Plumbing Products, Inc.
   c. Victaulic Company.

2. Description: Electroplated steel nipple with inert and noncorrosive, thermoplastic lining.

   a. Pressure Rating: 300 psig at 225 deg F
   b. End Connections: Threaded or grooved.

2.4 SLEEVES

A. Mechanical sleeve seals for pipe penetrations are specified in Section 220517 "Sleeves and Sleeve Seals for Plumbing Piping."

B. Galvanized-Steel Sheet Sleeves: 0.0239-inch minimum thickness; round tube closed with welded longitudinal joint.

C. Steel Pipe Sleeves: ASTM A 53/A 53M, Type E, Grade B, Schedule 40, galvanized, plain ends.

D. Cast-Iron Sleeves: Cast or fabricated "wall pipe" equivalent to ductile-iron pressure pipe, with plain ends and integral waterstop, unless otherwise indicated.

E. Molded PVC Sleeves: Permanent, with nailing flange for attaching to wooden forms.

F. PVC Pipe Sleeves: ASTM D 1785, Schedule 40.

G. Molded PE Sleeves: Reusable, PE, tapered-cup shaped, and smooth outer surface with nailing flange for attaching to wooden forms.

2.5 IDENTIFICATION DEVICES

A. General: Products specified are for applications referenced in other utilities Sections. If more than single type is specified for listed applications, selection is Installer's option.

B. Equipment Nameplates: Metal permanently fastened to equipment with data engraved or stamped.

1. Data: Manufacturer, product name, model number, serial number, capacity, operating and power characteristics, labels of tested compliances, and essential data.
2. Location: Accessible and visible.

C. Stencils: Standard stencils prepared with letter sizes complying with recommendations in ASME A13.1. Minimum letter height is 1-1/4 inches for ducts, and 3/4 inch or access door signs and similar operational instructions.

1. Material: Fiberboard
2. Stencil Paint: Exterior, oil-based, alkyd-gloss black enamel, unless otherwise indicated. Paint may be in pressurized spray-can form.
3. Identification Paint: Exterior, oil-based, alkyd enamel in colors according to ASME A13.1, unless otherwise indicated.

D. Snap-on Plastic Pipe Markers: Manufacturer's standard preprinted, semirigid, snap-on type. Include color-coding according to ASME A13.1, unless otherwise indicated.

E. Pressure-Sensitive Pipe Markers: Manufacturer's standard preprinted, color-coded, pressure-sensitive-vinyl type with permanent adhesive.

F. Pipes with OD, Including Insulation, Less Than 6 Inches: Full-band pipe markers, extending 360 degrees around pipe at each location.

G. Pipes with OD, Including Insulation, 6 Inches and Larger: Either full-band or strip-type pipe markers, at least three times letter height and of length required for label.

H. Lettering: Manufacturer's standard preprinted captions as selected by Architect.

I. Lettering: Use piping system terms indicated and abbreviate only as necessary for each application length.

1. Arrows: Either integrally with piping system service lettering to accommodate both directions of flow, or as separate unit on each pipe marker to indicate direction of flow.

J. Plastic Tape: Manufacturer's standard color-coded, pressure-sensitive, self-adhesive vinyl tape, at least 3 mils thick.

1. Width: 1-1/2 inches on pipes with OD, including insulation, less than 6 inches; 2-1/2 inches for larger pipes.
2. Color: Comply with ASME A13.1, unless otherwise indicated.

K. Valve Tags: Stamped or engraved with 1/4-inch letters for piping system abbreviation and 1/2-inch sequenced numbers. Include 5/32-inch hole for fastener.

1. Material: 0.032-inch- thick, [polished brass] [or] [aluminum].
2. Material: 0.0375-inch- thick stainless steel.
3. Material: 3/32-inch- thick plastic laminate with 2 black surfaces and a white inner layer.
4. Material: Valve manufacturer's standard solid plastic.
5. Size: 1-1/2 inches in diameter, unless otherwise indicated.
6. Shape: As indicated for each piping system.

L. Valve Tag Fasteners: Brass, wire-link or beaded chain; or brass S-hooks.

M. Engraved Plastic-Laminate Signs: ASTM D 709, Type I, cellulose, paper-base, phenolic-resin-laminate engraving stock; Grade ES-2, black surface, black phenolic core, with white melamine subcore, unless otherwise indicated. Fabricate in sizes required for message. Provide holes for mechanical fastening.

1. Engraving: Engraver's standard letter style, of sizes and with terms to match equipment identification.
2. Thickness: 1/8 inch, unless otherwise indicated.
3. Thickness: 1/16 inch, for units up to 20 sq. in. or 8 inches in length, and 1/8 inch for larger units.
4. Fasteners: Self-tapping, stainless-steel screws or contact-type permanent adhesive.

N. Plastic Equipment Markers: Manufacturer's standard laminated plastic, in the following color codes:

1. Green: Cooling equipment and components.
2. Yellow: Heating equipment and components.
3. Brown: Energy reclamation equipment and components.
4. Blue: Equipment and components that do not meet criteria above.
5. Hazardous Equipment: Use colors and designs recommended by ASME A13.1.
6. Terminology: Match schedules as closely as possible. Include the following:

    a. Name and plan number.
    b. Equipment service.
    c. Design capacity.
    d. Other design parameters such as pressure drop, entering and leaving conditions, and speed.

7. Size: 2-1/2 by 4 inches for control devices, dampers, and valves; 4-1/2 by 6 inches for equipment.

O. Plasticized Tags: Preprinted or partially preprinted, accident-prevention tags, of plasticized card stock with mat finish suitable for writing.

1. Size: 3-1/4 by 5-5/8 inches.
2. Fasteners: Brass grommets and wire.
3. Nomenclature: Large-size primary caption such as DANGER, CAUTION, or DO NOT OPERATE.

P. Lettering and Graphics: Coordinate names, abbreviations, and other designations used in piped utility identification with corresponding designations indicated. Use numbers, letters, and terms indicated for proper identification, operation, and maintenance of piped utility systems and equipment.

1. Multiple Systems: Identify individual system number and service if multiple systems of same name are indicated.

2.6 GROUT

A. Description: ASTM C 1107, Grade B, nonshrink and nonmetallic, dry hydraulic-cement grout.

1. Characteristics: Post hardening, volume adjusting, nonstaining, noncorrosive, nongaseous, and recommended for interior and exterior applications.
2. Design Mix: 5000-psi, 28-day compressive strength.
3. Packaging: Premixed and factory packaged.

2.7 FLOWABLE FILL

A. Description: Low-strength-concrete, flowable-slurry mix.

1. Cement: ASTM C 150, Type I, portland.
2. Density: 115- to 145-lb/cu. ft.
3. Aggregates: ASTM C 33, natural sand, fine and crushed gravel or stone, coarse.

4. Aggregates: ASTM C 33, natural sand, fine.
5. Admixture: ASTM C 618, fly-ash mineral.
6. Water: Comply with ASTM C 94/C 94M.
7. Strength: 200 psig at 28 days.

PART 3 - EXECUTION

3.1 PIPED UTILITY DEMOLITION

A. Refer to Section 024116 "Structure Demolition" for general demolition requirements and procedures.

B. Disconnect, demolish, and remove piped utility systems, equipment, and components indicated to be removed.

1. Piping to Be Removed: Remove portion of piping indicated to be removed and cap or plug remaining piping with same or compatible piping material.
2. Piping to Be Abandoned in Place: Drain piping. Fill abandoned piping with flowable fill, and cap or plug piping with same or compatible piping material.
3. Equipment to Be Removed: Disconnect and cap services and remove equipment.
4. Equipment to Be Removed and Reinstalled: Disconnect and cap services and remove, clean, and store equipment; when appropriate, reinstall, reconnect, and make operational.
5. Equipment to Be Removed and Salvaged: Disconnect and cap services and remove equipment and deliver to Owner.

C. If pipe, insulation, or equipment to remain is damaged in appearance or is unserviceable, remove damaged or unserviceable portions and replace with new products of equal capacity and quality.

3.2 DIELECTRIC FITTING APPLICATIONS

A. Dry Piping Systems: Connect piping of dissimilar metals with the following:

1. NPS 2 and Smaller: Dielectric unions.
2. NPS 2-1/2 to NPS 12: Dielectric flanges.

B. Wet Piping Systems: Connect piping of dissimilar metals with the following:

1. NPS 2 and Smaller: Dielectric Couplings or dielectric nipples.
2. NPS 2-1/2 to NPS 4: Dielectric nipples.
3. NPS 2-1/2 to NPS 8: Dielectric nipples or dielectric flange kits].
4. NPS 10 and NPS 12: Dielectric flange kits.

3.3 PIPING INSTALLATION

A. Install piping according to the following requirements and utilities Sections specifying piping systems.

B. Drawing plans, schematics, and diagrams indicate general location and arrangement of piping systems. Indicated locations and arrangements were used to size pipe and calculate friction loss, expansion, pump sizing, and other design considerations. Install piping as indicated unless deviations to layout are approved on the Coordination Drawings.

C. Install piping indicated to be exposed and piping in equipment rooms and service areas at right angles or parallel to building walls. Diagonal runs are prohibited unless specifically indicated otherwise.

D. Install piping to permit valve servicing.

E. Install piping at indicated slopes.

F. Install piping free of sags and bends.

G. Install fittings for changes in direction and branch connections.

H. Select system components with pressure rating equal to or greater than system operating pressure.

I. Sleeves are not required for core-drilled holes.

J. Permanent sleeves are not required for holes formed by removable PE sleeves.

K. Install sleeves for pipes passing through concrete and masonry walls and concrete floor and roof slabs.

1. Cut sleeves to length for mounting flush with both surfaces.

a. Exception: Extend sleeves installed in floors of equipment areas or other wet areas 2 inches above finished floor level.

2. Install sleeves in new walls and slabs as new walls and slabs are constructed.

a. Steel Pipe Sleeves: For pipes smaller than NPS 6.
b. Steel Sheet Sleeves: For pipes NPS 6 and larger, penetrating gypsum-board partitions.

L. Verify final equipment locations for roughing-in.

M. Refer to equipment specifications in other Sections for roughing-in requirements.

3.4 PIPING JOINT CONSTRUCTION

A. Join pipe and fittings according to the following requirements and utilities Sections specifying piping systems.

B. Ream ends of pipes and tubes and remove burrs. Bevel plain ends of steel pipe.

C. Remove scale, slag, dirt, and debris from inside and outside of pipe and fittings before assembly.

D. Threaded Joints: Thread pipe with tapered pipe threads according to ASME B1.20.1. Cut threads full and clean using sharp dies. Ream threaded pipe ends to remove burrs and restore full ID. Join pipe fittings and valves as follows:

1. Apply appropriate tape or thread compound to external pipe threads unless dry seal threading is specified.
2. Damaged Threads: Do not use pipe or pipe fittings with threads that are corroded or damaged. Do not use pipe sections that have cracked or open welds.

E. Welded Joints: Construct joints according to AWS D10.12/D10.12M, using qualified processes and welding operators according to Part 1 "Quality Assurance" Article.

F. Flanged Joints: Select appropriate gasket material, size, type, and thickness for service application. Install gasket concentrically positioned. Use suitable lubricants on bolt threads.

G. Grooved Joints: Assemble joints with grooved-end pipe coupling with coupling housing, gasket, lubricant, and bolts according to coupling and fitting manufacturer's written instructions.

H. Soldered Joints: Apply ASTM B 813 water-flushable flux, unless otherwise indicated, to tube end. Construct joints according to ASTM B 828 or CDA's "Copper Tube Handbook," using lead-free solder alloy (0.20 percent maximum lead content) complying with ASTM B 32.

I. Brazed Joints: Construct joints according to AWS's "Brazing Handbook," "Pipe and Tube" Chapter, using copper-phosphorus brazing filler metal complying with AWS A5.8.

J. Pressure-Sealed Joints: Assemble joints for plain-end copper tube and mechanical pressure seal fitting with proprietary crimping tool to according to fitting manufacturer's written instructions.

K. Plastic Piping Solvent-Cemented Joints: Clean and dry joining surfaces. Join pipe and fittings according to the following:

1. Comply with ASTM F 402 for safe-handling practice of cleaners, primers, and solvent cements.
2. ABS Piping: Join according to ASTM D 2235 and ASTM D 2661 appendixes.
3. CPVC Piping: Join according to ASTM D 2846/D 2846M Appendix.

4. PVC Pressure Piping: Join schedule number ASTM D 1785, PVC pipe and PVC socket fittings according to ASTM D 2672. Join other-than-schedule-number PVC pipe and socket fittings according to ASTM D 2855.
5. PVC Nonpressure Piping: Join according to ASTM D 2855.
6. PVC to ABS Nonpressure Transition Fittings: Join according to ASTM D 3138 Appendix.

L. Plastic Pressure Piping Gasketed Joints: Join according to ASTM D 3139.

M. Plastic Nonpressure Piping Gasketed Joints: Join according to ASTM D 3212.

N. Plastic Piping Heat-Fusion Joints: Clean and dry joining surfaces by wiping with clean cloth or paper towels. Join according to ASTM D 2657.

1. Plain-End PE Pipe and Fittings: Use butt fusion.
2. Plain-End PE Pipe and Socket Fittings: Use socket fusion.

O. Bonded Joints: Prepare pipe ends and fittings, apply adhesive, and join according to pipe manufacturer's written instructions.

3.5 PIPING CONNECTIONS

A. Make connections according to the following, unless otherwise indicated:

1. Install unions, in piping NPS 2 and smaller, adjacent to each valve and at final connection to each piece of equipment.
2. Install flanges, in piping NPS 2-1/2 and larger, adjacent to flanged valves and at final connection to each piece of equipment.
3. Install dielectric fittings at connections of dissimilar metal pipes.

3.6 EQUIPMENT INSTALLATION

A. Install equipment level and plumb, unless otherwise indicated.

B. Install equipment to facilitate service, maintenance, and repair or replacement of components. Connect equipment for ease of disconnecting, with minimum interference with other installations. Extend grease fittings to an accessible location.

C. Install equipment to allow right of way to piping systems installed at required slope.

3.7 PAINTING

A. Painting of piped utility systems, equipment, and components is specified in Section 099113 "Exterior Painting," Section 099123 "Interior Painting," and Section 099600 "High-Performance Coatings."

B. Damage and Touchup: Repair marred and damaged factory-painted finishes with materials and procedures to match original factory finish.

3.8 IDENTIFICATION

A. Piping Systems: Install pipe markers on each system. Include arrows showing normal direction of flow.

1. Stenciled Markers: According to ASME A13.1.
2. Plastic markers, with application systems. Install on insulation segment if required for hot noninsulated piping.
3. Locate pipe markers on exposed piping according to the following:

   a. Near each valve and control device.
   b. Near each branch, excluding short takeoffs for equipment and terminal units. Mark each pipe at branch if flow pattern is not obvious.
   c. Near locations where pipes pass through walls or floors or enter inaccessible enclosures.
   d. At manholes and similar access points that permit view of concealed piping.
   e. Near major equipment items and other points of origination and termination.

B. Equipment: Install engraved plastic-laminate sign or equipment marker on or near each major item of equipment.

1. Lettering Size: Minimum 1/4 inch high for name of unit if viewing distance is less than 24 inches 1/2 inch high for distances up to 72 inches, and proportionately larger lettering for greater distances. Provide secondary lettering two-thirds to three-fourths of size of principal lettering.
2. Text of Signs: Provide name of identified unit. Include text to distinguish among multiple units, inform user of operational requirements, indicate safety and emergency precautions, and warn of hazards and improper operations.

C. Adjusting: Relocate identifying devices that become visually blocked by work of this or other Divisions.

3.9 CONCRETE BASES

A. Concrete Bases: Anchor equipment to concrete base according to equipment manufacturer's written instructions and according to seismic codes at Project.

1. Construct concrete bases of dimensions indicated, but not less than 4 inches larger in both directions than supported unit.
2. Install dowel rods to connect concrete base to concrete floor. Unless otherwise indicated, install dowel rods on 18-inch centers around the full perimeter of base.
3. Install epoxy-coated anchor bolts for supported equipment that extend through concrete base, and anchor into structural concrete floor.
4. Place and secure anchorage devices. Use supported equipment manufacturer's setting drawings, templates, diagrams, instructions, and directions furnished with items to be embedded.
5. Install anchor bolts to elevations required for proper attachment to supported equipment.

6. Install anchor bolts according to anchor-bolt manufacturer's written instructions.
7. Use 3000-psi, 28-day compressive-strength concrete and reinforcement as specified in Section 033000 Cast-in-Place Concrete.

3.10 ERECTION OF METAL SUPPORTS AND ANCHORAGES

A. Refer to Section 055000 "Metal Fabrications" for structural steel.

B. Cut, fit, and place miscellaneous metal supports accurately in location, alignment, and elevation to support and anchor piped utility materials and equipment.

C. Field Welding: Comply with AWS D1.1/D1.1M.

3.11 GROUTING

A. Mix and install grout for equipment base bearing surfaces, pump and other equipment base plates, and anchors.

B. Clean surfaces that will come into contact with grout.

C. Provide forms as required for placement of grout.

D. Avoid air entrapment during placement of grout.

E. Place grout, completely filling equipment bases.

F. Place grout on concrete bases and provide smooth bearing surface for equipment.

G. Place grout around anchors.

H. Cure placed grout.

END OF SECTION 330500

SECTION 321723 - PAVEMENT MARKINGS

PART 1 - GENERAL

1.1 RELATED DOCUMENTS

A. Drawings and general provisions of the Contract, including General and Supplementary Conditions and Division 01 Specification Sections, apply to this Section.

1.2 SUMMARY

A. Section includes painted markings applied to asphalt and concrete pavement.

1.3 PREINSTALLATION MEETINGS

A. Preinstallation Conference: Conduct conference at Project site.

1. Review methods and procedures related to marking pavement including, but not limited to, the following:

a. Pavement aging period before application of pavement markings.
b. Review requirements for protecting pavement markings, including restriction of traffic during installation period.

1.4 ACTION SUBMITTALS

A. Product Data: For each type of product.

1. Include technical data and tested physical and performance properties.

B. Shop Drawings: For pavement markings.

1. Indicate pavement markings, colors, lane separations, defined parking spaces, and dimensions to adjacent work.

C. Samples: For each exposed product and for each color and texture specified; on rigid backing, 8 inches square.

1.5 QUALITY ASSURANCE

A. Regulatory Requirements: Comply with materials, workmanship, and other applicable requirements of APWA of Utah for pavement-marking work.

1. Measurement and payment provisions and safety program submittals included in standard specifications do not apply to this Section.

1.6 FIELD CONDITIONS

A. Environmental Limitations: Proceed with pavement marking only on clean, dry surfaces and at a minimum ambient or surface temperature of 40 deg F for alkyd materials 55 deg F for water-based materials and not exceeding 95 deg F

PART 2 - PRODUCTS

2.1 MANUFACTURERS

A. Manufacturers: Subject to compliance with requirements, available manufacturers offering products that may be incorporated into the Work include, but are not limited to, the following:

1. Aexcel Inc.
2. Benjamin Moore & Co.
3. Color Wheel Paints & Coatings.
4. Columbia Paint & Coatings.
5. Conco Paints.
6. Coronado Paint; Division of INSL-X Products Corporation.
7. Diamond Vogel Paints.
8. Dunn-Edwards Corporation.
9. Ennis Traffic Safety Solutions, Inc.
10. Frazee Paint.
11. General Paint.
12. Kwal Paint.
13. M.A.B. Paints.
14. McCormick Paints.
15. Miller Paint.
16. Parker Paint Mfg. Co. Inc.
17. PPG Industries.
18. Pratt & Lambert.
19. Rodda Paint Co.
20. Rohm and Haas Company; a subsidiary of The Dow Chemical Company.
21. Scott Paint Company.
22. Sherwin-Williams Company (The).

2.2 PAVEMENT-MARKING PAINT

A. Pavement-Marking Paint: Alkyd-resin type, lead and chromate free, ready mixed, complying with AASHTO M 248, Type N; colors complying with FS TT-P-1952.

1. Color: As indicated.

B. Pavement-Marking Paint: MPI #32, alkyd traffic-marking paint.

1. Color: As Indicated.

C. Pavement-Marking Paint: Latex, waterborne emulsion, lead and chromate free, ready mixed, complying with FS TT-P-1952, Type II, with drying time of less than 45 minutes.

1. Color: As indicated

D. Pavement-Marking Paint: MPI #97, latex traffic-marking paint.

1. Color: As indicated

E. Glass Beads: AASHTO M 247, Type 1 made of 100 percent recycled glass.

1. Roundness: Minimum 80 percent true spheres by weight.

PART 3 - EXECUTION

3.1 EXAMINATION

A. Verify that pavement is dry and in suitable condition to begin pavement marking according to manufacturer's written instructions.

B. Proceed with pavement marking only after unsatisfactory conditions have been corrected.

3.2 PAVEMENT MARKING

A. Do not apply pavement-marking paint until layout, colors, and placement have been verified with Architect.

B. Allow paving to age for a minimum of 30 days before starting pavement marking.

C. Sweep and clean surface to eliminate loose material and dust.

D. Apply paint with mechanical equipment to produce pavement markings, of dimensions indicated, with uniform, straight edges. Apply at manufacturer's recommended rates to provide a minimum wet film thickness of 15 mils.

1. Apply graphic symbols and lettering with paint-resistant, die-cut stencils, firmly secured to pavement. Mask an extended area beyond edges of each stencil to prevent paint application beyond the stencil. Apply paint so that it cannot run beneath the stencil.
2. Broadcast glass beads uniformly into wet markings at a rate of 6 lb/gal.

3.3 PROTECTING AND CLEANING

A. Protect pavement markings from damage and wear during remainder of construction period.

B. Clean spillage and soiling from adjacent construction using cleaning agents and procedures recommended by manufacturer of affected construction.

END OF SECTION 321723

SECTION 321713 - PARKING BUMPERS

PART 1 - GENERAL

1.1 RELATED DOCUMENTS

A. Drawings and general provisions of the Contract, including General and Supplementary Conditions and Division 01 Specification Sections, apply to this Section.

1.2 SUMMARY

A. Section includes wheel stops.

1.3 ACTION SUBMITTALS

A. Product Data: For each type of product.

B. LEED Submittals:

1. Product Data for Credit MR 4: For products having recycled content, documentation indicating percentages by weight of postconsumer and preconsumer recycled content. Include statement indicating cost for each product having recycled content.

C. Samples for Initial Selection: For each type of exposed finish requiring color selection.

D. Samples for Verification: For wheel stops, 6 inches, showing color and cross section; with fasteners.

PART 2 - PRODUCTS

2.1 PARKING BUMPERS

A. Concrete Wheel Stops: Precast, steel-reinforced, air-entrained concrete, 4000-psi minimum compressive strength, 4-1/2 inches high by 9 inches wide by 72 inches long. Provide chamfered corners, transverse drainage slots on underside, and a minimum of two factory-formed or -drilled vertical holes through wheel stop for anchoring to substrate.

1. Surface Appearance: Free of pockets, sand streaks, honeycombs, and other obvious defects. Corners shall be uniform, straight, and sharp.

2. Mounting Hardware: Galvanized-steel spike or dowel, 1/2-inch diameter, 10-inch minimum length lag screw, shield, and washers; 1/2-inch diameter, 8-inch minimum length or hardware as standard with wheel-stop manufacturer].

PART 3 - EXECUTION

3.1 EXAMINATION

A. Verify that pavement is in suitable condition to begin installation according to manufacturer's written instructions.

B. Proceed with installation only after unsatisfactory conditions have been corrected.

3.2 INSTALLATION

A. General: Install wheel stops according to manufacturer's written instructions unless otherwise indicated.

B. Install wheel stops in bed of adhesive before anchoring.

C. Securely anchor wheel stops to pavement with hardware in each preformed vertical hole in wheel stop as recommended in writing by manufacturer. Recess head of hardware beneath top of wheel stop.

END OF SECTION 321713

SECTION 321313 - CONCRETE PAVING

PART 1 - GENERAL

1.1 RELATED DOCUMENTS

A. Drawings and general provisions of the Contract, including General and Supplementary Conditions and Division 01 Specification Sections, apply to this Section.

1.2 SUMMARY

A. This Section includes exterior cement concrete pavement for the following:

1. Aprons and landings.
2. Sidewalks.
3. Curbs.

1.3 SUBMITTALS

A. Product Data: For each type of product indicated.

B. Design Mixtures: For each concrete pavement mixture.

1.4 QUALITY ASSURANCE

A. Manufacturer Qualifications: Manufacturer of ready-mixed concrete products who complies with ASTM C 94/C 94M requirements for production facilities and equipment.

B. ACI Publications: Comply with ACI 301, "Specification for Structural Concrete," unless modified by requirements in the Contract Documents.

1.5 WARRANTY

A. Contractor shall provide additional 2 year written guarantee commencing on the date of Substantial Completion to promptly remove and/or repair defective concrete (pitting, spalling, cracking, honeycombing, etc.).

PART 2 - PRODUCTS

2.1 CONCRETE MATERIALS

A. Cementitious Material: Use the following cementitious materials, of the same type, brand, and source throughout the Project:

1. Portland Cement: ASTM C 150, Type I/II, gray. Supplement with the following:

a. Fly Ash: ASTM C 618, Class F.

B. Normal-Weight Aggregates: ASTM C 33, Class 4S coarse aggregate, uniformly graded. Provide aggregates from a single source.

C. Water: ASTM C 94/C 94M.

D. Air-Entraining Admixture: ASTM C 260.

E. Chemical Admixtures: ASTM C 494/C 494M, of type suitable for application, certified by manufacturer to be compatible with other admixtures and to contain not more than 0.1 percent water-soluble chloride ions by mass of cementitious material.

2.2 CURING MATERIALS

A. Absorptive Cover: AASHTO M 182, Class 2, burlap cloth.

B. Moisture-Retaining Cover: ASTM C 171, polyethylene film or white burlap-polyethylene sheet.

C. Water: Potable.

D. Evaporation Retarder: Waterborne, monomolecular film forming; manufactured for application to fresh concrete.

E. Clear Waterborne Membrane-Forming Curing Compound: ASTM C 309, Type 1, Class B, dissipating.

2.3 RELATED MATERIALS

A. Expansion- and Isolation-Joint-Filler Strips: Cork or self-expanding cork.

2.4 CONCRETE MIXTURES

A. Prepare design mixtures, proportioned according to ACI 301, with the following properties:

1. Compressive Strength (28 Days): 4000 psi.
2. Maximum Water-Cementitious Materials Ratio at Point of Placement: 0.45.
3. Slump Limit: 4 inches, plus or minus 1 inch.
4. Air Content: 6.0 percent, plus or minus 1.0 percent at point of delivery for 1-1/2-inch nominal maximum aggregate size.

2.5 CONCRETE MIXING

A. Ready-Mixed Concrete: Measure, batch, and mix concrete materials and concrete according to ASTM C 94/C 94M. Furnish batch certificates for each batch discharged and used in the Work.

PART 3 - EXECUTION

3.1 EDGE FORMS AND SCREED CONSTRUCTION

A. Set, brace, and secure edge forms, bulkheads, and intermediate screed guides for pavement to required lines, grades, and elevations. Install forms to allow continuous progress of work and so forms can remain in place at least 24 hours after concrete placement.

B. Clean forms after each use and coat with form-release agent to ensure separation from concrete without damage.

3.2 JOINTS

A. General: Form construction, isolation, and contraction joints and tool edgings true to line with faces perpendicular to surface plane of concrete. Construct transverse joints at right angles to centerline, unless otherwise indicated.

B. Construction Joints: Set construction joints at side and end terminations of pavement and at locations where pavement operations are stopped for more than one-half hour unless pavement terminates at isolation joints.

C. Isolation Joints: Form isolation joints of preformed joint-filler strips abutting concrete curbs, catch basins, manholes, inlets, structures, walks, other fixed objects, and where indicated.

D. Contraction Joints: Form weakened-plane contraction joints, sectioning concrete into areas as indicated. Construct contraction joints for a depth equal to at least one-fourth of the concrete thickness.

E. Edging: Tool edges of pavements and joints in concrete after initial floating with an edging tool to a 1/4-inch radius. Repeat tooling of edges after applying surface finishes. Eliminate tool marks on concrete surfaces.

3.3 CONCRETE PLACEMENT

A. Moisten base to provide a uniform dampened condition at time concrete is placed.

B. Comply with ACI 301 requirements for measuring, mixing, transporting, and placing concrete.

C. Deposit and spread concrete in a continuous operation between transverse joints. Do not push or drag concrete into place or use vibrators to move concrete into place.

D. Screed pavement surfaces with a straightedge and strike off.

E. Commence initial floating using bull floats or darbies to impart an open textured and uniform surface plane before excess moisture or bleed water appears on the surface. Do not further disturb concrete surfaces before beginning finishing operations or spreading surface treatments.

3.4 FLOAT FINISHING

A. General: Do not add water to concrete surfaces during finishing operations.

B. Float Finish: Begin the second floating operation when bleed-water sheen has disappeared and concrete surface has stiffened sufficiently to permit operations. Float surface with power-driven floats, or by hand floating if area is small or inaccessible to power units. Finish surfaces to true planes. Cut down high spots and fill low spots. Refloat surface immediately to uniform granular texture.

1. Medium Textured Broom Finish: Draw a soft bristle broom across float-finished concrete surface perpendicular to line of traffic to provide a uniform, medium-line texture. Coordinate required final finish with Architect before application.

3.5 CONCRETE PROTECTION AND CURING

A. General: Protect freshly placed concrete from premature drying and excessive cold or hot temperatures.

B. Comply with ACI 306.1 for cold-weather protection.

C. Evaporation Retarder: Apply evaporation retarder to concrete surfaces if hot, dry, or windy conditions cause moisture loss approaching 0.2 lb/sq. ft. x h before and during finishing operations. Apply according to manufacturer's written instructions after placing, screeding, and bull floating or darbying concrete, but before float finishing.

D. Begin curing after finishing concrete but not before free water has disappeared from concrete surface.

E. Curing Methods: Cure concrete by moisture curing, moisture-retaining-cover curing, curing compound, or a combination of these methods.

3.6 PAVEMENT TOLERANCES

A. Comply with tolerances of ACI 117 and as follows:

1. Elevation: 1/4 inch.
2. Thickness: Plus 3/8 inch, no minus.
3. Surface: Gap below 10-foot- long, unleveled straightedge not to exceed 1/4 inch.
4. Joint Spacing: 3 inches.
5. Contraction Joint Depth: Plus 1/4 inch, no minus.
6. Joint Width: Plus 1/8 inch, no minus.

3.7 REPAIRS AND PROTECTION

A. Remove and replace concrete pavement that is broken, damaged, or defective or that does not comply with requirements in this Section.

B. Protect concrete from damage. Exclude traffic from pavement for at least 14 days after placement.

C. Maintain concrete pavement free of stains, discoloration, dirt, and other foreign material. Sweep concrete pavement not more than two days before date scheduled for Substantial Completion inspections.

END OF SECTION 321313

SECTION 321216 - ASPHALT PAVING

PART 1 - GENERAL

1.1 RELATED DOCUMENTS

A. Drawings and general provisions of the Contract, including General and Supplementary Conditions and Division 01 Specification Sections, apply to this Section.

1.2 SUMMARY

A. Section Includes:

1. Cold milling of existing asphalt pavement.
2. Hot-mix asphalt patching.
3. Hot-mix asphalt paving.
4. Hot-mix asphalt overlay.
5. Asphalt curbs.
6. Asphalt traffic-calming devices.
7. Asphalt surface treatments.

B. Related Requirements:

1. Section 024116 "Structure Demolition" for demolition and removal of existing asphalt pavement.
2. Section 312000 "Earth Moving" for subgrade preparation, fill material, unbound-aggregate subbase and base courses, and aggregate pavement shoulders.
3. Section 321373 "Concrete Paving Joint Sealants" for joint sealants and fillers at pavement terminations.

1.3 PREINSTALLATION MEETINGS

A. Preinstallation Conference: Conduct conference at Project site.

1. Review methods and procedures related to hot-mix asphalt paving including, but not limited to, the following:

a. Review proposed sources of paving materials, including capabilities and location of plant that will manufacture hot-mix asphalt.
b. Review requirements for protecting paving work, including restriction of traffic during installation period and for remainder of construction period.

1.4 ACTION SUBMITTALS

A. Product Data: For each type of product.

1. Include technical data and tested physical and performance properties.
2. Job-Mix Designs: For each job mix proposed for the Work.

B. LEED Submittals:

1. Product Data for Credit MR 4: For products having recycled content, documentation indicating percentages by weight of postconsumer and preconsumer recycled content. Include statement indicating cost for each product having recycled content.

C. Samples for Verification: For the following product, in manufacturer's standard sizes unless otherwise indicated:

1. Paving Fabric: 12 by 12 inches minimum.

1.5 INFORMATIONAL SUBMITTALS

A. Qualification Data: For manufacturer.

B. Material Certificates: For each paving material. Include statement that mixes containing recycled materials will perform equal to mixes produced from all new materials.

C. Material Test Reports: For each paving material, by a qualified testing agency.

D. Field quality-control reports.

1.6 QUALITY ASSURANCE

A. Manufacturer Qualifications: A paving-mix manufacturer registered with and approved by authorities having jurisdiction or the DOT of state in which Project is located.

B. Testing Agency Qualifications: Qualified according to ASTM D 3666 for testing indicated.

C. Regulatory Requirements: Comply with materials, workmanship, and other applicable requirements of APWA of Utah for asphalt paving work.

1. Measurement and payment provisions and safety program submittals included in standard specifications do not apply to this Section.

1.7 FIELD CONDITIONS

A. Environmental Limitations: Do not apply asphalt materials if subgrade is wet or excessively damp, if rain is imminent or expected before time required for adequate cure, or if the following conditions are not met:

1. Prime Coat: Minimum surface temperature of 60 deg F
2. Tack Coat: Minimum surface temperature of 60 deg F
3. Slurry Coat: Comply with weather limitations in ASTM D 3910.
4. Asphalt Base Course: Minimum surface temperature of 40 deg F and rising at time of placement.
5. Asphalt Surface Course: Minimum surface temperature of 60 deg F at time of placement.

PART 2 - PRODUCTS

2.1 AGGREGATES

A. General: Use materials and gradations that have performed satisfactorily in previous installations.

B. Coarse Aggregate: ASTM D 692/D 692M, sound; angular crushed stone, crushed gravel, or cured, crushed blast-furnace slag.

C. Fine Aggregate: ASTM D 1073, sharp-edged natural sand or sand prepared from stone, gravel, cured blast-furnace slag, or combinations thereof.

1. For hot-mix asphalt, limit natural sand to a maximum of 20 percent by weight of the total aggregate mass.

D. Mineral Filler: ASTM D 242/D 242M, rock or slag dust, hydraulic cement, or other inert material.

2.2 ASPHALT MATERIALS

A. Asphalt Binder: AASHTO M 320,

B. Asphalt Cement: ASTM D 3381/D 3381M for viscosity-graded material]

C. Cutback Prime Coat: ASTM D 2027, medium-curing cutback asphalt.

D. Emulsified Asphalt Prime Coat: ASTM D 977 emulsified asphalt, or [ASTM D 2397 cationic emulsified asphalt, slow setting, diluted in water, of suitable grade and consistency for application.

E. Tack Coat: ASTM D 977 emulsified asphalt, or ASTM D 2397 cationic emulsified asphalt, slow setting, diluted in water, of suitable grade and consistency for application.

F. Fog Seal: ASTM D 977 emulsified asphalt, or ASTM D 2397 cationic emulsified asphalt, slow setting, factory diluted in water, of suitable grade and consistency for application.

G. Water: Potable.

H. Undersealing Asphalt: ASTM D 3141/D 3141M; pumping consistency.

2.3 AUXILIARY MATERIALS

A. Recycled Materials for Hot-Mix Asphalt Mixes: Reclaimed asphalt pavement; reclaimed, unbound-aggregate base material; and recycled tires, asphalt shingles or glass from sources and gradations that have performed satisfactorily in previous installations, equal to performance of required hot-mix asphalt paving produced from all new materials.

B. Herbicide: Commercial chemical for weed control, registered by the EPA, and not classified as "restricted use" for locations and conditions of application. Provide in granular, liquid, or wettable powder form.

C. Sand: ASTM D 1073 Grade No. 2 or No. 3.

D. Paving Geotextile: AASHTO M 288 paving fabric; nonwoven polypropylene; resistant to chemical attack, rot, and mildew; and specifically designed for paving applications.

E. Joint Sealant: ASTM D 6690, Type I, hot-applied, single-component, polymer-modified bituminous sealant.

2.4 MIXES

A. Recycled Content of Hot-Mix Asphalt: Postconsumer recycled content plus one-half of preconsumer recycled content not less than 10 percent or more than 15 percent by weight.

1. Surface Course Limit: Recycled content no more than 10 percent by weight.

B. Hot-Mix Asphalt: Dense-graded, hot-laid, hot-mix asphalt plant mixes approved by authorities having jurisdiction; designed according to procedures in AI MS-2, "Mix Design Methods for Asphalt Concrete and Other Hot-Mix Types and complying with the following requirements:

1. Provide mixes with a history of satisfactory performance in geographical area where Project is located.
2. Base Course: Refer to APWA

3. Surface Course: Refer to APWA
4. In "Emulsified-Asphalt Slurry" Paragraph below, retain appropriate type from options listed. Slurry is a mixture of emulsified asphalt, fine aggregate, and mineral fillers. Type 1 offers maximum crack penetration and is used for surface sealing of lightly trafficked areas such as parking lots. Type 2, the most widely used gradation, is suited to moderate traffic, fills surface voids, corrects surface erosion, and builds a minimum wearing surface. Type 3 builds a new wearing surface, may build up a crown, and improves skid resistance.

C. Emulsified-Asphalt Slurry: ASTM D 3910, Type 1.

PART 3 - EXECUTION

3.1 EXAMINATION

A. Verify that subgrade is dry and in suitable condition to begin paving.

B. Proof-roll subgrade below pavements with heavy pneumatic-tired equipment to identify soft pockets and areas of excess yielding. Do not proof-roll wet or saturated subgrades.

1. Completely proof-roll subgrade in one direction repeating proof-rolling in direction perpendicular to first direction. Limit vehicle speed to 3 mph.
2. Proof roll with a loaded 10-wheel, tandem-axle dump truck weighing not less than 15 tons
3. Excavate soft spots, unsatisfactory soils, and areas of excessive pumping or rutting, as determined by Architect, and replace with compacted backfill or fill as directed.

C. Proceed with paving only after unsatisfactory conditions have been corrected.

3.2 PATCHING

A. Asphalt Pavement: Saw cut perimeter of patch and excavate existing pavement section to sound base. Excavate rectangular or trapezoidal patches, extending 12 inches into perimeter of adjacent sound pavement, unless otherwise indicated. Cut excavation faces vertically. Remove excavated material. Recompact existing unbound-aggregate base course to form new subgrade.

B. Portland Cement Concrete Pavement: Break cracked slabs and roll as required to reseat concrete pieces firmly.

1. Pump hot undersealing asphalt under rocking slab until slab is stabilized or, if necessary, crack slab into pieces and roll to reseat pieces firmly.
2. Remove disintegrated or badly cracked pavement. Excavate rectangular or trapezoidal patches, extending into perimeter of adjacent sound pavement,

unless otherwise indicated. Cut excavation faces vertically. Recompact existing unbound-aggregate base course to form new subgrade.

C. Tack Coat: Before placing patch material, apply tack coat uniformly to vertical asphalt surfaces abutting the patch. Apply at a rate of 0.05 to 0.15 gal./sq. yd.

1. Allow tack coat to cure undisturbed before applying hot-mix asphalt paving.
2. Avoid smearing or staining adjoining surfaces, appurtenances, and surroundings. Remove spillages and clean affected surfaces.

D. Placing Patch Material: Fill excavated pavement areas with hot-mix asphalt base mix for full thickness of patch and, while still hot, compact flush with adjacent surface.

E. Placing Patch Material: Partially fill excavated pavements with hot-mix asphalt base mix and, while still hot, compact. Cover asphalt base course with compacted, hot-mix surface layer finished flush with adjacent surfaces.

3.3 REPAIRS

A. Leveling Course: Install and compact leveling course consisting of hot-mix asphalt surface course to level sags and fill depressions deeper than 1 inch in existing pavements.

1. Install leveling wedges in compacted lifts not exceeding 3 inches thick.

B. Crack and Joint Filling: Remove existing joint filler material from cracks or joints to a depth of 1/4 inch

1. Clean cracks and joints in existing hot-mix asphalt pavement.
2. Use emulsified-asphalt slurry to seal cracks and joints less than 1/4 inch wide. Fill flush with surface of existing pavement and remove excess.
3. Use hot-applied joint sealant to seal cracks and joints more than 1/4 inch wide. Fill flush with surface of existing pavement and remove excess.

3.4 SURFACE PREPARATION

A. General: Immediately before placing asphalt materials, remove loose and deleterious material from substrate surfaces. Ensure that prepared subgrade is ready to receive paving.

B. Herbicide Treatment: Apply herbicide according to manufacturer's recommended rates and written application instructions. Apply to dry, prepared subgrade or surface of compacted-aggregate base before applying paving materials.

1. Mix herbicide with prime coat if formulated by manufacturer for that purpose.

C. Cutback Prime Coat: Apply uniformly over surface of compacted unbound-aggregate base course at a rate of 0.15 to 0.50 gal./sq. yd. Apply enough material to penetrate and seal, but not flood, surface. Allow prime coat to cure.

1. If prime coat is not entirely absorbed within 24 hours after application, spread sand over surface to blot excess asphalt. Use enough sand to prevent pickup under traffic. Remove loose sand by sweeping before pavement is placed and after volatiles have evaporated.
2. Protect primed substrate from damage until ready to receive paving.

D. Emulsified Asphalt Prime Coat: Apply uniformly over surface of compacted unbound-aggregate base course at a rate of 0.10 to 0.30 gal./sq. yd. per inch depth Apply enough material to penetrate and seal, but not flood, surface. Allow prime coat to cure.

1. If prime coat is not entirely absorbed within 24 hours after application, spread sand over surface to blot excess asphalt. Use enough sand to prevent pickup under traffic. Remove loose sand by sweeping before pavement is placed and after volatiles have evaporated.
2. Protect primed substrate from damage until ready to receive paving.

E. Tack Coat: Apply uniformly to surfaces of existing pavement at a rate of 0.05 to 0.15 gal./sq. yd.

1. Allow tack coat to cure undisturbed before applying hot-mix asphalt paving.
2. Avoid smearing or staining adjoining surfaces, appurtenances, and surroundings. Remove spillages and clean affected surfaces.

3.5 PAVING GEOTEXTILE INSTALLATION

A. Apply tack coat, asphalt binder, asphalt cement uniformly to existing pavement surfaces at a rate of 0.20 to 0.30 gal./sq. yd.

B. Place paving geotextile promptly according to manufacturer's written instructions. Broom or roll geotextile smooth and free of wrinkles and folds. Overlap longitudinal joints 4 inches and transverse joints 6 inches. Protect paving geotextile from traffic and other damage, and place hot-mix asphalt overlay the same day.

3.6 PLACING HOT-MIX ASPHALT

A. Machine place hot-mix asphalt on prepared surface, spread uniformly, and strike off. Place asphalt mix by hand in areas inaccessible to equipment in a manner that prevents segregation of mix. Place each course to required grade, cross section, and thickness when compacted.

1. Place hot-mix asphalt base course in number of lifts and thicknesses indicated.
2. Place hot-mix asphalt surface course in single lift.
3. Spread mix at a minimum temperature of 250 deg F.

4. Begin applying mix along centerline of crown for crowned sections and on high side of one-way slopes unless otherwise indicated.
5. Regulate paver machine speed to obtain smooth, continuous surface free of pulls and tears in asphalt-paving mat.

B. Place paving in consecutive strips not less than 10 feet wide unless infill edge strips of a lesser width are required.

1. After first strip has been placed and rolled, place succeeding strips and extend rolling to overlap previous strips. Overlap mix placement about 1 to 1-1/2 inches from strip to strip to ensure proper compaction of mix along longitudinal joints.
2. Complete a section of asphalt base course before placing asphalt surface course.

C. Promptly correct surface irregularities in paving course behind paver. Use suitable hand tools to remove excess material forming high spots. Fill depressions with hot-mix asphalt to prevent segregation of mix; use suitable hand tools to smooth surface.

3.7 COMPACTION

A. General: Begin compaction as soon as placed hot-mix paving will bear roller weight without excessive displacement. Compact hot-mix paving with hot, hand tampers or with vibratory-plate compactors in areas inaccessible to rollers.

1. Complete compaction before mix temperature cools to 185 deg F

B. Breakdown Rolling: Complete breakdown or initial rolling immediately after rolling joints and outside edge. Examine surface immediately after breakdown rolling for indicated crown, grade, and smoothness. Correct laydown and rolling operations to comply with requirements.

C. Intermediate Rolling: Begin intermediate rolling immediately after breakdown rolling while hot-mix asphalt is still hot enough to achieve specified density. Continue rolling until hot-mix asphalt course has been uniformly compacted to the following density:

1. Average Density: 96 percent of reference laboratory density according to ASTM D 6927, but not less than 94 percent or greater than 100 percent.
2. Average Density: 92 percent of reference maximum theoretical density according to ASTM D 2041, but not less than 90 percent or greater than 96 percent.

D. Finish Rolling: Finish roll paved surfaces to remove roller marks while hot-mix asphalt is still warm.

E. Edge Shaping: While surface is being compacted and finished, trim edges of pavement to proper alignment. Bevel edges while asphalt is still hot; compact thoroughly.

F. Repairs: Remove paved areas that are defective or contaminated with foreign materials and replace with fresh, hot-mix asphalt. Compact by rolling to specified density and surface smoothness.

G. Protection: After final rolling, do not permit vehicular traffic on pavement until it has cooled and hardened.

H. Erect barricades to protect paving from traffic until mixture has cooled enough not to become marked.

3.8 ASPHALT CURBS

A. Construct hot-mix asphalt curbs over compacted pavement surfaces. Apply a light tack coat unless pavement surface is still tacky and free from dust. Spread mix at a minimum temperature of 250 deg F

1. Asphalt Mix: Same as pavement surface-course mix.

B. Place hot-mix asphalt to curb cross section indicated or, if not indicated, to local standard shapes, by machine or by hand in wood or metal forms. Tamp hand-placed materials and screed to smooth finish. Remove forms after hot-mix asphalt has cooled.

3.9 INSTALLATION TOLERANCES

A. Pavement Thickness: Compact each course to produce the thickness indicated within the following tolerances:

1. Base Course: Plus or minus 1/2 inch
2. Surface Course: Plus 1/4 inch, no minus.

B. Pavement Surface Smoothness: Compact each course to produce a surface smoothness within the following tolerances as determined by using a 10-foot straightedge applied transversely or longitudinally to paved areas:

1. Base Course: 1/4 inch
2. Surface Course: 1/8 inch
3. Crowned Surfaces: Test with crowned template centered and at right angle to crown. Maximum allowable variance from template is 1/4 inch.

C. Asphalt Traffic-Calming Devices: Compact and form asphalt to produce the contour indicated and within a tolerance of plus or minus 1/8 inch of height indicated above pavement surface.

3.10 SURFACE TREATMENTS

A. Fog Seals: Apply fog seal at a rate of 0.10 to 0.15 gal./sq. yd. to existing asphalt pavement and allow to cure. With fine sand, lightly dust areas receiving excess fog seal.

B. Slurry Seals: Apply slurry coat in a uniform thickness according to ASTM D 3910 and allow to cure.

1. Roll slurry seal to remove ridges and provide a uniform, smooth surface.

3.11 FIELD QUALITY CONTROL

A. Testing Agency: Owner will engage a qualified testing agency to perform tests and inspections.

B. Thickness: In-place compacted thickness of hot-mix asphalt courses will be determined according to ASTM D 3549.

C. Surface Smoothness: Finished surface of each hot-mix asphalt course will be tested for compliance with smoothness tolerances.

D. Asphalt Traffic-Calming Devices: Finished height of traffic-calming devices above pavement will be measured for compliance with tolerances.

E. In-Place Density: Testing agency will take samples of uncompacted paving mixtures and compacted pavement according to ASTM D 979.

1. Reference maximum theoretical density will be determined by averaging results from four samples of hot-mix asphalt-paving mixture delivered daily to site, prepared according to ASTM D 2041, and compacted according to job-mix specifications.
2. In-place density of compacted pavement will be determined by testing core samples according to ASTM D 1188 or ASTM D 2726.

   a. One core sample will be taken for every 1000 sq. yd. or less of installed pavement, with no fewer than three cores taken.
   b. Field density of in-place compacted pavement may also be determined by nuclear method according to ASTM D 2950 and correlated with ASTM D 1188 or ASTM D 2726.

F. Replace and compact hot-mix asphalt where core tests were taken.

G. Remove and replace or install additional hot-mix asphalt where test results or measurements indicate that it does not comply with specified requirements.

3.12 WASTE HANDLING

A. General: Handle asphalt-paving waste according to approved waste management plan required in Section 017419 "Construction Waste Management and Disposal."

END OF SECTION 321216

SECTION 312000 - EARTH MOVING

PART 1 - GENERAL

1.1 RELATED DOCUMENTS

A. Drawings and general provisions of the Contract, including General and Supplementary Conditions and Division 01 Specification Sections, apply to this Section.

1.2 SUMMARY

A. This Section includes the following:

1. Excavating and backfilling for structures.
2. Preparing subgrades for footings, slabs, and pavements.
3. Drainage course for concrete slabs-on-grade.
4. Base course for pavements.
5. Excavating and backfilling trenches for utilities.
6. Temporary erosion- and sedimentation-control measures.
7. Dewatering.

B. Related Sections include the following:

1. Division 01 Section "Temporary Facilities and Controls" for temporary controls, utilities, and support facilities.

1.3 DEFINITIONS

A. Backfill: Soil material used to fill an excavation.

B. Base Course: Aggregate layer placed between the subgrade and a cement concrete pavement.

C. Borrow Soil: Satisfactory soil imported from off-site for use as fill or backfill.

D. Excavation: Removal of material encountered above subgrade elevations and to lines and dimensions indicated.

1. Authorized Additional Excavation: Excavation below subgrade elevations or beyond indicated lines and dimensions as directed by Architect. Authorized additional excavation and replacement material will be paid for according to Contract provisions for changes in the Work.
2. Unauthorized Excavation: Excavation below subgrade elevations or beyond indicated lines and dimensions without direction by Architect. Unauthorized

excavation, as well as remedial work directed by Architect, shall be without additional compensation.

E. Fill: Soil materials used to raise existing grades.

F. Structures: Buildings, footings, foundations, slabs, or other man-made stationary features constructed above or below the ground surface.

G. Subgrade: Uppermost surface of an excavation or the top surface of a fill or backfill immediately below base course materials.

H. Utilities: On-site underground pipes, conduits, ducts, and cables, as well as underground services within buildings.

1.4 SUBMITTALS

A. Material Test Reports: From a qualified testing agency indicating and interpreting test results for compliance of the following with requirements indicated:

1. Classification according to ASTM D 2487 of each borrow soil material proposed for fill and backfill.

B. Pre-excavation Photographs or Videotape: Show existing conditions of adjoining construction and site improvements, including finish surfaces, that might be misconstrued as damage caused by earthwork operations. Submit before earthwork begins.

1.5 QUALITY ASSURANCE

A. Preexcavation Conference: Conduct conference at Project site to comply with requirements in Division 01 Section "Project Management and Coordination."

1.6 PROJECT CONDITIONS

A. Existing Utilities: Locate existing underground utilities before performing earthwork operations. If utilities are to remain in place, provide protection from damage during earthwork operations.

1. Should uncharted or incorrectly charted piping or other utilities be encountered during excavation, adapt earthwork procedure if necessary to prevent damage to utilities. Cooperate with Owner and utility companies in keeping services and facilities in operation without interruption. Repair damaged utilities to satisfaction of utility owner.

B. Do not commence site clearing operations until temporary erosion- and sedimentation-control measures are in place

PART 2 - PRODUCTS

2.1 SOIL MATERIALS

A. General: Provide borrow soil materials when sufficient satisfactory soil materials are not available from excavations.

B. Satisfactory Soils: As indicated in the Geotechnical Report, or if not indicated, ASTM D 2487 Soil Classification Groups GW, GP, GM, or a combination of these groups; free of rock or gravel larger than 3 inches in any dimension, debris, waste, frozen materials, vegetation, and other deleterious matter.

C. Unsatisfactory Soils: As indicated in the Geotechnical Report, or if not indicated, Soil Classification Groups GC, SC, CL, ML, OL, CH, MH, OH, and PT according to ASTM D 2487, or a combination of these groups.

1. Unsatisfactory soils also include satisfactory soils not maintained within required percent of optimum moisture content at time of compaction.

D. Bedding Course: Naturally or artificially graded mixture of natural or crushed gravel, crushed stone, and natural or crushed sand; ASTM D 2940; except with 100 percent passing a 1-inch sieve and not more than 8 percent passing a No. 200 sieve, unless noted otherwise.

E. Drainage Course: Narrowly graded mixture of crushed stone, or crushed or uncrushed gravel; ASTM D 448; coarse-aggregate grading Size 57; with 100 percent passing a 1-1/2-inch sieve and 0 to 5 percent passing a No. 8 sieve.

F. Base Material: Naturally or artificially graded mixture of natural or crushed gravel, crushed stone, and natural or crushed sand; ASTM D 2940; with at least 95 percent passing a 1-1/2-inch sieve and not more than 8 percent passing a No. 200 sieve.

G. Structural Fill: As indicated in the structural notes on the structural drawings.

2.2 ACCESSORIES

A. Detectable Warning Tape: Acid- and alkali-resistant polyethylene film warning tape manufactured for marking and identifying underground utilities, a minimum of 6 inches wide and 4 mils thick, continuously inscribed with a description of the utility, with metallic core encased in a protective jacket for corrosion protection, detectable by metal detector when tape is buried up to 30 inches deep; colored as follows:

1. Red: Electric.
2. Yellow: Gas.
3. Orange: Telephone and other communications.
4. Blue: Water systems.
5. Green: Sewer systems.

PART 3 - EXECUTION

3.1 PREPARATION

A. Protect structures, utilities, pavements, and other facilities from damage caused by settlement, lateral movement, undermining, washout, and other hazards created by earthwork operations.

B. Protect and maintain benchmarks and survey control points from disturbance during construction.

C. Protect existing site improvements to remain from damage during construction.

1. Restore damaged improvements to their original condition, as acceptable to Owner.

D. Provide protective insulating materials to protect subgrades and foundation soils against freezing temperatures or frost.

E. Strip all deleterious materials beneath the building area extending out at minimum two feet beyond perimeter of building footprint.

3.2 TEMPORARY EROSION AND SEDIMENTATION CONTROL

A. Provide temporary erosion- and sedimentation-control measures to prevent soil erosion and discharge of soil-bearing water runoff or airborne dust to adjacent properties and walkways, according to requirements of authorities having jurisdiction.

B. Verify that flows of water redirected from construction areas or generated by construction activity do not enter or cross protection zones.

C. Inspect, maintain, and repair erosion- and sedimentation-control measures during construction.

D. Remove erosion and sedimentation controls and restore and stabilize areas disturbed during removal.

3.3 DEWATERING

A. Prevent surface water and ground water from entering excavations, from ponding on prepared subgrades, and from flooding Project site and surrounding area.

B. Protect subgrades from softening, undermining, washout, and damage by rain or water accumulation.

1. Reroute surface water runoff away from excavated areas. Do not allow water to accumulate in excavations. Do not use excavated trenches as temporary drainage ditches.
2. Install a dewatering system to keep subgrades dry and convey ground water away from excavations. Maintain until dewatering is no longer required.

3.4 EXPLOSIVES

A. Explosives: Do not use explosives.

3.5 EXCAVATION, GENERAL

A. Remove existing layer of undocumented site fill down to suitable natural soils beneath building footings and slabs, and pavements.

B. Unclassified Excavation: Excavate to subgrade elevations regardless of the character of surface and subsurface conditions encountered. Unclassified excavated materials may include rock, soil materials, and obstructions. No changes in the Contract Sum or the Contract Time will be authorized for rock excavation or removal of obstructions.

1. If excavated materials intended for fill and backfill include unsatisfactory soil materials and rock, replace with structural fill.

C. Do not establish footings on soft, loose or disturbed soils, non-engineered fills, sod, rubbish, frozen soils, debris, or within ponded water. If the natural granular soils which the footings are to be established become loose or disturbed, re-compact to the requirements for structural fill. Where unsuitable soils are encountered, remove and replaced with granular structural fill. If granular structural fill which the footings are to be established become disturbed, re-compact to the requirements for structural fill.

3.6 EXCAVATION FOR STRUCTURES

A. Excavate to indicated elevations and dimensions within a tolerance of plus or minus 1 inch. If applicable, extend excavations a sufficient distance from structures for placing and removing concrete formwork, for installing services and other construction, and for inspections.

1. Excavations for Footings and Foundations: Do not disturb bottom of excavation. Use smooth-lip bucket at footing excavations to reduce disturbance of bearing soils. Trim bottoms to required lines and grades.

3.7 EXCAVATION FOR PAVEMENTS

A. Excavate surfaces under pavements to indicated lines, cross sections, elevations, and subgrades.

3.8 EXCAVATION FOR UTILITY TRENCHES

A. Excavate trenches to indicated gradients, lines, depths, and elevations.

B. Excavate trenches to uniform widths to provide the following clearance on each side of pipe or conduit. Excavate trench walls vertically from trench bottom to 12 inches higher than top of pipe or conduit, unless otherwise indicated.

1. Clearance: 12 inches each side of pipe or conduit unless otherwise indicated.

C. Trench Bottoms: Excavate trenches 4 inches deeper than bottom of pipe and conduit elevations to allow for bedding course, unless otherwise indicated. Hand-excavate deeper for bells of pipe.

3.9 SUBGRADE INSPECTION

A. Notify Geotechnical Engineer when excavations have reached required subgrade.

B. If Geotechnical Engineer determines that unsatisfactory soil is present, continue excavation and replace with compacted structural fill as directed.

C. Prior to placing site grading fills, footings, floor slabs, and pavements, proof-roll subgrade, including disturbed and undisturbed natural soils, by passing moderate-weight rubber tire-mounted construction equipment over the surface at least three times. Remove excessively soft or loose soils encountered below footings and replace with compacted structural fill. If required removal of soft soils below footings is greater than two feet thick, notify Geotechnical Engineer. Below floor slabs and pavements, remove excessively soft or loose soils to a maximum depth of two feet and replace with compacted structural fill. In confined areas, remove loose and disturbed soils.

D. Reconstruct subgrades damaged by freezing temperatures, frost, rain, accumulated water, or construction activities, as directed by Architect, without additional compensation.

3.10 UNAUTHORIZED EXCAVATION

A. Fill unauthorized excavation under foundations or wall footings by extending bottom elevation of concrete foundation or footing to excavation bottom, without altering top elevation. Lean concrete fill, with 28-day compressive strength of 500 psi, may be used when approved by Architect.

1. Fill unauthorized excavations under other construction, pipe, or conduit as directed by Architect.

3.11 BACKFILL

A. Place and compact backfill in excavations promptly, but not before completing the following:

1. For backfill, use structural fill.
2. Surveying locations of underground utilities for Record Documents.
3. Testing and inspecting underground utilities.
4. Removing trash and debris.
5. Removing concrete formwork.

B. Place backfill on subgrades free of mud, frost, snow, or ice.

3.12 UTILITY TRENCH BACKFILL

A. Place utility trench backfill on subgrades free of mud, frost, snow, or ice.

B. Place and compact bedding material at pipes and conduits as indicated.

1. Carefully compact evenly up on both sides and along the full length of utility pipe or conduit to avoid damage or displacement of conduit. Coordinate backfilling with utilities testing.

C. Provide concrete encasement of conduits where indicated. Concrete is specified in Division 03 Section "Cast-in-Place Concrete."

D. Backfill trenches excavated under footings and within 18 inches of bottom of footings with structural fill; fill with concrete to elevation of bottom of footings. Concrete is specified in Division 03 Section "Cast-in-Place Concrete."

E. Backfill voids with structural fill while installing and removing shoring and bracing.

F. Place and compact initial backfill of structural fill, to a height of 12 inches over the pipe or conduit.

1. Carefully compact initial backfill under pipe haunches and compact evenly up on both sides and along the full length of piping or conduit to avoid damage or displacement of piping or conduit. Coordinate backfilling with utilities testing.

G. Place and compact final backfill of structural fill to final subgrade elevation.

H. If the surface of the utility trench backfill becomes disturbed during the course of construction, proof-roll or properly compact the backfill prior to construction of exterior

improvements over a backfilled trench. Proof-roll and replace defective materials as required above at Subgrade Inspection".

I. Install warning tape directly above utilities, 12 inches below finished grade, except 6 inches below subgrade under pavements and slabs.

3.13 SOIL FILL

A. Place and compact fill material in layers to required elevations as follows:

1. Under pavements, use structural fill.
2. Under building slabs, use structural fill.
3. Under footings and foundations, use structural fill.
4. At site grading fill, use structural fill.

B. Place soil fill on subgrades free of mud, frost, snow, or ice.

3.14 SOIL MOISTURE CONTROL

A. Uniformly moisten or aerate subgrade and each subsequent fill or backfill soil layer before compaction to within 2 percent of optimum moisture content.

1. Do not place backfill or fill soil material on surfaces that are muddy, frozen, or contain frost or ice.
2. Remove and replace, or scarify and air dry otherwise satisfactory soil material that exceeds optimum moisture content by 2 percent and is too wet to compact to specified dry unit weight.

3.15 COMPACTION OF SOIL BACKFILLS AND FILLS

A. Place backfill and fill soil materials in layers not more than 8 inches in loose depth for material compacted by heavy compaction equipment, and not more than 4 inches in loose depth for material compacted by hand-operated tampers.

B. Place backfill and fill soil materials evenly on all sides of structures to required elevations, and uniformly along the full length of each structure.

C. Compact soil materials to not less than the following percentages of maximum dry density according to ASTM D 1557:

1. Under structures, including building slabs, and beneath an area extending minimum 2 ft. from perimeter of structure, compact each layer of backfill or fill soil material at 95 percent.
2. Under pavements, compact each layer of backfill or fill soil material at 95 percent.

3. Under areas not beneath the area extending minimum 2 ft, from perimeter of structure, and which are less than 5 ft. thick, compact each layer of backfill or fill soil material at 90 percent.
4. Under areas not beneath the area extending minimum 2 ft, from perimeter of structure, and which are 5 ft. thick or greater, compact each layer of backfill or fill soil material at 92 percent.
5. For utility trenches, compact each layer of backfill soil material at 96 percent.

3.16 GRADING

A. General: Uniformly grade areas to a smooth surface, free of irregular surface changes. Comply with compaction requirements and grade to cross sections, lines, and elevations indicated.

1. Provide a smooth transition between adjacent existing grades and new grades.
2. Cut out soft spots, fill low spots, and trim high spots to comply with required surface tolerances.

B. Site Grading: Slope grades to direct water away from buildings and to prevent ponding. Finish subgrades to required elevations within the following tolerances:

1. Unpaved Areas: Plus or minus 1 inch.
2. Pavements: Plus or minus 1/2 inch of subgrade elevation, below base course.

3.17 BASE COURSES

A. Place base course on subgrades free of mud, frost, snow, or ice.

B. On prepared subgrade, place base course under pavements as follows:

1. Place base course 6 inches or less in compacted thickness in a single layer.
2. Place base course that exceeds 6 inches in compacted thickness in layers of equal thickness, with no compacted layer more than 6 inches thick or less than 3 inches thick.
3. Compact base course at optimum moisture content to required grades, lines, cross sections, and thickness to not less than 96 percent of maximum dry unit weight according to ASTM D 1557.

3.18 FIELD QUALITY CONTROL

A. Testing Agency: Owner will engage a qualified independent geotechnical engineering testing agency to perform field quality-control testing.

B. Allow testing agency to inspect and test subgrades and each fill or backfill layer. Proceed with subsequent earthwork only after test results for previously completed work comply with requirements.

C. Footing Subgrade: At footing subgrades, at least one test of each soil stratum will be performed to verify design bearing capacities. Subsequent verification and approval of other footing subgrades may be based on a visual comparison of subgrade with tested subgrade when approved by Architect.

D. Testing agency will test compaction of soils in place according to ASTM D 1556, ASTM D 2167, ASTM D 2922, and ASTM D 2937, as applicable. Tests will be performed at the following locations and frequencies:

1. Paved and Building Slab Areas: At subgrade and at each compacted fill and backfill layer, at least 1 test for every 800 sq. ft. or less of paved area or building slab, but in no case fewer than 3 tests per lift.

E. When testing agency reports that subgrades, fills, or backfills have not achieved degree of compaction specified, scarify and moisten or aerate, or remove and replace soil to depth required; recompact and retest until specified compaction is obtained.

3.19 PROTECTION

A. Protecting Graded Areas: Protect newly graded areas from traffic, freezing, and erosion. Keep free of trash and debris.

B. Repair and reestablish grades to specified tolerances where completed or partially completed surfaces become eroded, rutted, settled, or where they lose compaction due to subsequent construction operations or weather conditions.

1. Scarify or remove and replace soil material to depth as directed by Architect; reshape and recompact.

C. Where settling occurs before Project correction period elapses, remove finished surfacing, backfill with additional soil material, compact, and reconstruct surfacing.

1. Restore appearance, quality, and condition of finished surfacing to match adjacent work, and eliminate evidence of restoration to greatest extent possible.

3.20 DISPOSAL OF SURPLUS AND WASTE MATERIALS

A. Disposal: Remove surplus satisfactory soil and waste material, including unsatisfactory soil, trash, and debris, and legally dispose of it off Owner's property.

END OF SECTION 312000

SECTION 311000 - SITE CLEARING

PART 1 - GENERAL

1.1 RELATED DOCUMENTS

A. Drawings and general provisions of the Contract, including General and Supplementary Conditions and Division 01 Specification Sections, apply to this Section.

1.2 SUMMARY

A. This Section includes the following:

1. Protecting existing trees, shrubs, and grass to remain.
2. Removing existing trees and grass.
3. Clearing and grubbing.
4. Stripping and stockpiling topsoil.
5. Removing above- and below-grade site improvements.
6. Disconnecting, capping or sealing, and abandoning site utilities in place or removing site utilities.
7. Temporary erosion and sedimentation control measures.

B. Related Sections include the following:

1. Division 01 Section "Temporary Facilities and Controls" for temporary utilities, temporary construction and support facilities, temporary security and protection facilities.
2. Division 01 Section "Execution" for verifying utility locations and for recording field measurements.
3. Division 31 Section "Earth Moving" for soil materials, excavating, backfilling, and site grading.
4. Division 23 Section "Lawns and Grasses" for finish grading including preparing and placing planting soil mixes and testing of topsoil material.

1.3 DEFINITIONS

A. Topsoil: Natural or cultivated surface-soil layer containing organic matter and sand, silt, and clay particles; friable, pervious, and black or a darker shade of brown, gray, or red than underlying subsoil; reasonably free of subsoil, clay lumps, gravel, and other objects more than 2 inches in diameter; and free of subsoil and weeds, roots, toxic materials, or other nonsoil materials.

B. Tree Protection Zone: Area surrounding individual trees or groups of trees to be protected during construction, and defined by the drip line of individual trees or the perimeter drip line of groups of trees, unless otherwise indicated.

1.4 MATERIAL OWNERSHIP

A. Except for stripped topsoil or other materials indicated to remain Owner's property, cleared materials shall become Contractor's property and shall be removed from Project site.

1.5 SUBMITTALS

A. Photographs or videotape, sufficiently detailed, of existing conditions of trees and plantings, adjoining construction, and site improvements that might be misconstrued as damage caused by site clearing.

B. Record drawings, according to Division 01 Section "Project Record Documents," identifying and accurately locating capped utilities and other subsurface structural, electrical, and mechanical conditions.

1.6 PROJECT CONDITIONS

A. Traffic: Minimize interference with adjoining roads, streets, walks, and other adjacent occupied or used facilities during site-clearing operations.

1. Do not close or obstruct streets, walks, or other adjacent occupied or used facilities without permission from Owner and authorities having jurisdiction.
2. Provide alternate routes around closed or obstructed traffic ways if required by authorities having jurisdiction.

B. Utility Locator Service: Notify utility locator service for area where Project is located before site clearing.

C. Do not commence site clearing operations until temporary erosion and sedimentation control measures are in place.

PART 2 - PRODUCTS

2.1 SOIL MATERIALS

A. Satisfactory Soil Materials: Requirements for satisfactory soil materials are specified in Division 31 Section "Earth Moving."

1. Obtain approved borrow soil materials off-site when satisfactory soil materials are not available on-site.

PART 3 - EXECUTION

3.1 PREPARATION

A. Protect and maintain benchmarks and survey control points from disturbance during construction.

B. Locate and clearly flag trees and vegetation to remain or to be relocated.

C. Protect existing site improvements to remain from damage during construction.

1. Restore damaged improvements to their original condition, as acceptable to Owner.

3.2 TEMPORARY EROSION AND SEDIMENTATION CONTROL

A. Provide temporary erosion and sedimentation control measures to prevent soil erosion and discharge of soil-bearing water runoff or airborne dust to adjacent areas and walkways, according to requirements of authorities having jurisdiction.

B. Inspect, repair, and maintain erosion and sedimentation control measures during construction until permanent vegetation has been established.

C. Remove erosion and sedimentation controls and restore and stabilize areas disturbed during removal.

3.3 TREE PROTECTION

A. Erect and maintain temporary fencing around tree protection zones before starting site clearing. Remove fence when construction is complete.

1. Do not store construction materials, debris, or excavated material within fenced area.
2. Do not permit vehicles, equipment, or foot traffic within fenced area.
3. Maintain fenced area free of weeds and trash.

B. Do not excavate within tree protection zones, unless otherwise indicated.

C. Where excavation for new construction is required within tree protection zones, hand clear and excavate to minimize damage to root systems. Use narrow-tine spading forks, comb soil to expose roots, and cleanly cut roots as close to excavation as possible.

1. Cover exposed roots with burlap and water regularly.
2. Temporarily support and protect roots from damage until they are permanently redirected and covered with soil.

3. Coat cut faces of roots more than 1-1/2 inches in diameter with an emulsified asphalt or other approved coating formulated for use on damaged plant tissues.
4. Backfill with soil as soon as possible.

D. Repair or replace trees and vegetation indicated to remain that are damaged by construction operations, in a manner approved by Architect.

1. Employ an arborist, licensed in jurisdiction where Project is located, to submit details of proposed repairs and to repair damage to trees and shrubs.
2. Replace trees that cannot be repaired and restored to full-growth status, as determined by Architect.

3.4 UTILITIES

A. Locate, identify, disconnect, and seal or cap off utilities indicated to be removed.

1. Owner will arrange to shut off indicated utilities when requested by Contractor.

B. Existing Utilities: Do not interrupt utilities serving facilities occupied by Owner or others unless permitted under the following conditions and then only after arranging to provide temporary utility services according to requirements indicated:

1. Notify Owner not less than two days in advance of proposed utility interruptions.
2. Do not proceed with utility interruptions without Owner's written permission.

C. Excavate for and remove underground utilities indicated to be removed.

3.5 CLEARING AND GRUBBING

A. Remove obstructions, trees, shrubs, grass, and other vegetation to permit installation of new construction.

1. Do not remove trees, shrubs, and other vegetation indicated to remain or to be relocated.
2. Cut minor roots and branches of trees indicated to remain in a clean and careful manner where such roots and branches obstruct installation of new construction.
3. Grind stumps and remove roots, obstructions, and debris extending to a depth of 18 inches below exposed subgrade.
4. Use only hand methods for grubbing within tree protection zone.
5. Chip removed tree branches and dispose of off-site.

B. Fill depressions caused by clearing and grubbing operations with satisfactory soil material unless further excavation or earthwork is indicated.

1. Place fill material in horizontal layers not exceeding a loose depth of 8 inches, and compact each layer to a density equal to adjacent original ground.

3.6 TOPSOIL STRIPPING

A. Remove sod and grass before stripping topsoil.

B. Strip topsoil to whatever depths are encountered in a manner to prevent intermingling with underlying subsoil or other waste materials.

1. Remove subsoil and nonsoil materials from topsoil, including trash, debris, weeds, roots, and other waste materials.

C. Stockpile topsoil materials away from edge of excavations without intermixing with subsoil. Grade and shape stockpiles to drain surface water. Cover to prevent windblown dust.

1. Limit height of topsoil stockpiles to 72 inches.
2. Do not stockpile topsoil within tree protection zones.
3. Dispose of excess topsoil as specified for waste material disposal.
4. Stockpile surplus topsoil to allow for respreading deeper topsoil.

3.7 SITE IMPROVEMENTS

A. Remove existing above- and below-grade improvements as indicated and as necessary to facilitate new construction.

B. Remove slabs, paving, curbs, gutters, and aggregate base as indicated.

1. Unless existing full-depth joints coincide with line of demolition, neatly saw-cut length of existing pavement to remain before removing existing pavement. Saw-cut faces vertically.
2. Paint cut ends of steel reinforcement in concrete to remain to prevent corrosion.

3.8 DISPOSAL

A. Disposal: Remove surplus soil material, unsuitable topsoil, obstructions, demolished materials, and waste materials including trash and debris, and legally dispose of them off Owner's property.

END OF SECTION 311000

SECTION 26 05 36 – CONCRETE MANHOLES

PART 1 - GENERAL

1.1 WORK INCLUDED:

A. Furnish and install all concrete manholes, ladders, and accessories as herein specified and shown on the drawings.

B. Submit detailed drawings showing applicable dimensions, imbedded struts, pulling irons, ladders, rings, cover, and drain grate.

PART 2 - PRODUCTS

2.1 ACCEPTABLE MANUFACTURERS:

A. Amcor Precast, Duracrete Inc., or poured in place

B. Requests for substitution of other products will be considered if submitted in accordance with the General Conditions, Division 01, and Section 26 05 00.

2.2 MATERIALS:

A. Concrete manhole vaults shall be constructed of precast or poured in place concrete. Precast materials shall be shipped to the jobsite as a unit assembly unless separate vertical sections are assembled at the jobsite by stacking. Stacked sections shall be sealed with suitable material. Keyway all stacked sections to prevent shifting and movement after installation.

B. Provide manhole interior dimension height as detailed on the drawings.

C. Easily removed knockouts shall be provided to permit conduit entrance. Locate knockouts only where conduits will be installed in this contract. Do not install future knockouts. Knockouts shall be located within a few inches of the corner of the manhole, to allow ease of racking of all cabling exiting the ductbanks.

D. Vault floor shall be pitched for drainage and one or more drain holes shall be provided.

E. Superstrut C300 series mounting channel, or equal of Unistrut, shall be cast into interior walls.

F. Pulling-in irons shall be included inside each manhole as detailed.

G. Cable supports shall be provided for all cables, as detailed, fastened to wall channels. Racks shall be of galvanized steel and shall be of the removable type. The metal portion of racks shall be zinc-coated after fabrication.

H. Manhole ladder of sufficient length for total depth of the manhole plus grade rings shall be provided. Ladders that prove too short shall be replaced. Provide stainless steel ladders, of heavy duty construction, Suitable for a man and equipment weighting 300 pounds, with 12 inch rung spacing. Rungs shall be treated for slip resistant surface. Ladder shall not bend excessively with 300 pounds in center. Ladders shall have mechanical connection to manhole rings at entry, to prevent ladder from sliding or falling.

I. Embedded metal parts such as channels, pulling-in inserts and cable supports, and bell ends on conduit shall have grounding connection.

J. Frame and cover for manholes shall be standard manhle entries, troffer pattern, non-ventilated, cast iron with 30" clear opening size; cast-in inscriptions "ELECTRIC". Riser sections shall be provided to support manhole frame and cover at grade. Inside diameter of riser sections shall be 42".

K. Provide two ground rods for each manhole; copperweld 3/4" diameter, 10'-0" long driven just inside the finished wall with top 4" above the finished floor. Ground all metal items within the manhole with No. 6 bare stranded soft drawn copper wire.

L. All cables and splices shall be racked to side walls. Supports for cables shall be cable clamps of dry-process glazed porcelain. The clamps shall consist of porcelain half circles mounted on rolled steel sections with a steel clamp and locking screw. The supports shall be Burndy, Unistrut, Superstrut, or Elcen. All channels, attachments and parts shall be hot dip galvanized.

PART 3 - EXECUTION

3.1 INSTALLATION:

A. Seal surfaces between sections on multi-section vaults must be clean and all gaskets must be in place. Excavation hole must not contain water when setting vault. Excavation must provide a minimum of 18 inches clearance around the side walls of each vault for ease of installation and for compaction of backfill.

B. Backfill around all vaults with engineered fill, pea gravel or sand. No voids should remain between the vault walls and native soil. Backfill must be progressively compacted from the bottom to the top surface. Provide 12 inches of compacted gravel, graded level, under each vault for drainage.

C. Seal all joints between vault sections, lid, risers, covers, etc. with appropriate gasket or sealant. Apply in a manner to insure filling of all voids in the joint being sealed.

D. All cables and splices shall be separated by feeder and shall be fire taped with 3M fire tape per manufacturers instructions.

E. All feeders shall be tagged with metal identification tags indicating the wire size, conductor type, and feeder designation. Example: “500EPR CU - F73A”.

F. Spray paint, with lettering template, label the manhole name inside the manhole at the lid location. Spray paint with lettering template, label all entry conduits to indicate where they run. Example: “TO MH 31D”.

END OF SECTION

SECTION 26 05 34 - DUCTBANKS

PART 1 - GENERAL

1.1 DESCRIPTION OF WORK:

A. Provide all underground non-metallic duct lines for certain underground raceways, for extent shown.

PART 2 - PRODUCTS

2.1 DUCT LINES AND ACCESSORIES:

A. Ducts: Rigid polyvinyl chloride conduit; Schedule 40, Type I, conforming to UL Article 651. Beneath building, ducts shall be rigid galvanized steel.

B. Couplings: Slip-on, solvent sealed to pipe; solvent, Western No. 715.

C. Adapters to Underground Conduit: Conduit ends shall be closely fitted without any rough edges of offsets. Maintain existing line and grade.

D. Spacers and Bindings on Multiple Conduit Runs: Plastic, same manufacturer as raceways; embedded in the concrete; 1-1/2" clearance between raceways.

E. Reinforcing Steel: Conform to ASTM 0615.

F. Concrete: 2500 psi concrete to ASTM C94; maximum aggregate size, 1"; purchased from source approved by the Owner's representative.

PART 3 - EXECUTION

3.1 UNDERGROUND DUCT LINES:

A. Depth of Conduit Installed Underground: 3'-0" minimum below finished grade to top of conduit.

B. Grade: Install with uniform gradient between end pulling points; 3" in 100', minimum.

C. Couplings: Provide for slip-on, solvent sealed to pipe: solvent, Western No. 715.

D. Spacing of spacers and binding or multiple duct lines; 10'-0" on centers.

E. Provide rigid galvanized steel conduit at ends and bends, through slab at pad-mount transformer, and for all duct banks installed beneath the building. Connections to underground steel conduit shall be closely fitted without any rough edges of offsets. Maintain line and grade.

F. Reinforcing Steel: Provide bars in duct banks including four No. 4 bars as shown, full length; and transverse ties on 18" centers, formed from No. 3 bars. Ends of bars shall be lapped 40 diameters and tied with No. 20 gage soft annealed steel wire. Bars shall extend full length of underground raceways.

G. Concrete Encasement: For all duct-lines and connection conduit, encasement thickness 4" minimum, 2500 psi concrete, placement per ASTM C94.

H. Pull Wires: Install 1/32 minimum polypropylene rope, Jet-Line "Poly Rope" or Ideal "Pro-Pull" rope in all ducts and conduits, except where wiring is installed under this contract; approximately 3'-0" of free rope left at each cabinet and pullbox and outlet.

END OF SECTION

Electrical Specifications Index

Camp Williams phase 1

30% specifications

Basic Electrical Materials & Methods 26 05 00
Wires & Cables over 600 Volts 26 05 13
Wires & Cables 26 05 19
Grounding and Bonding 26 05 26
Raceways 26 05 33
Duct Bank 26 05 34
Concrete Manholes 26 05 36
Concrete Transformer Pads 26 05 37
Seismic Restraint for Electrical Work 26 05 48
Panelboards 26 24 16
Switches & Receptacles 26 27 26
Surge Protective Devices 26 43 00
Lighting 26 51 00

SECTION 26 05 00 – BASIC ELECTRICAL MATERIALS AND METHODS

PART 1 - GENERAL

1.1 WORK INCLUDED:

A. Provide all items, articles, materials, equipment, operations and/or methods listed, mentioned, shown and/or scheduled on the drawings and/or in these specifications, including all labor, services, permits, fees, utility charges, and incidentals necessary and required to perform and complete the electrical work described in this Division. Apply for all permits early in the project to avoid problems due to code revisions.

B. See the contract conditions (general and supplementary) and Division 1 for requirements concerning this Division including, but not limited to, submittals, shop drawings, substitution requests, change orders, maintenance manuals, record drawings, coordination, permits, record documents and guarantees.

C. Division 26 Contractor shall be responsible for all work indicated by divisions 26, 27, 28, and the electrical portions of 33 within the drawings and specifications. Any work indicated by Division 16 shall be provided and installed by the Division 26 Contractor.

1.2 RELATED WORK SPECIFIED ELSEWHERE:

A. Verify and coordinate all equipment locations and electrical characteristics with other trades involved in the work. Coordination shall be done prior to rough-in or ordering equipment.

B. Control wiring for irrigation beyond provisions shown on the Electrical Drawings shall be performed under another Division of the work.

1.3 QUALITY ASSURANCE:

A. Do all work in accordance with regulations of the National Electrical Code, state and local codes and amendments, National Fire Codes, and all other applicable codes.

B. For design portion of the design build, designers must follow the DFCM Design Guidelines and the Army National Guard DG 415-5 (May 2005) Guidelines.

1.4 PROJECT CONDITIONS:

A. The Contractor shall inspect the job site prior to bidding and familiarize himself with existing conditions which will affect the work. Prior to start of work, obtain "As built", "Record", or other Drawings showing existing underground utilities.

B. Electrical drawings are diagrammatic indicating approximate location of outlets, lighting fixtures, electrical equipment, etc. Consult the Civil Drawings and Landscape Drawings to avoid conflicts with equipment, site features, etc. When required make all deviations from Drawings to make the work conform to the building as constructed, and to related work of others. Minor relocations ordered prior to installation may be made without added cost to Owner.

C. Call to the attention of the Owner any error, omission, conflict or discrepancy in Drawings and/or Specifications. Do not proceed with any questionable items of work until clarification of same has been made.

D. Under no conditions are beams, girders, footings or columns to be cut for electrical items unless so shown on Drawings or written approval obtained from the Owner.

E. Verify the physical dimensions of each item of electrical equipment to fit the available space and promptly notify the Owner prior to roughing-in if conflicts appear. Coordination of equipment to the available space and to the access routes through the construction shall be the Contractor's responsibility.

1.5 SHOP DRAWINGS:

A. Prior to ordering equipment, and prior to Contractor's first application for payment, the Contractor shall, within 14 days after award of this work, submit six (6) complete shop drawings, neatly bound in 3-ring binder form, with indexed tabs, to the Owner, of materials and equipment he proposes to furnish. It is preferred that all sections be submitted at once, however, in the event that one or more sections need approvals quickly and others are not prepared yet, the Owner or owners representative will agree to review the individual section submittals needing immediate approval. However, each individual submittal section must be complete and remaining submittals that are not a rush shall be submitted all in one package as quickly as possible. Submitting individual sections over many weeks/months will not be tolerated.

B. List shall bear Contractor's stamp, signature or other means to show that he has inspected same and certified that submitted material is correct in regard to quantity, size, dimension, quality and is coordinated with the Contract Documents.

C. See individual sections within this Division for products requiring submittal.

D. Each shop drawing submittal shall be prepared by the manufacturer, and shall clearly show manufacturer's name, catalog numbers, pictures, details, layout, type, size, rating, style, and all options identified in a permanent fashion. Specific items or options shall be permanently marked on sheets containing more than one option – do not rely on the Engineer to mark options. Yellow highlight will not be an acceptable means of marking.

E. Large equipment drawings such as lighting poles and similar large equipment shall include the size, weight, seismic rating, and wiring diagrams in addition to the product data.

F. Provide complete materials (all materials) list at the beginning of each tabbed section showing "Specification Section", "Material Item", "Manufacturer's Name and Catalog Number", and all pertinent data.

H. Provide samples where required in individual sections of this Division.

I. Contractor agrees that Shop Drawing Submittals processed by the Owner are not Change Orders; that the purpose of Shop Drawing Submittals by the Contractor is to demonstrate to the Owner that the Contractor understands the design concept, that he demonstrates his understanding by indicating which equipment and material he intends to furnish and install and by detailing the fabrication and installation methods he intends to use.

J. Contractor further agrees that if deviations, discrepancies or conflicts between Shop Drawings and Specifications are discovered either prior to or after Shop Drawing Submittals are processed by the Owner, the design Drawings and Specifications shall control and shall be followed.

PART 2 - PRODUCTS

2.1 MATERIALS:

A. All materials shall be new and bear manufacturer's name, model number, electrical characteristics and other identification. All equipment to be U.L. approved or listed by another testing agency approved by authorities having jurisdiction.

B. Material and equipment shall be standard product of manufacturer regularly engaged in production of similar material for at least five years (unless specifically exempted) and shall be manufacturer's latest design.

C. If the description of a product is in conflict with the product as specified in the catalog number, the description shall generally take precedence. Contact the Architect for clarification if this occurs.

D. All equipment for essential or life safety systems must be rated and certified for the appropriate seismic design category or seismic use group for the installed location.

2.2 DISCONNECTS:

A. Safety and disconnect switches to be Heavy duty quick-make, quick-break, dual rated, lockable, and of such electrical characteristics as required for the load served. Switches to have defeatable cover interlock.

B. Fuse clips shall accept Class R or Class L fuses if required.

C. Disconnect switches required by code shall be installed whether or not specifically shown on the Drawings.

D. Safety and disconnect switches (fuse, non-fuse or circuit-breaker type) to be of same manufacturer as switchgear and panelboards.

2.3 FUSES:

A. Provide fuses as indicated on the drawings, sized per NEC, or as required by the equipment manufacturer, whichever provides maximum protection, for a fully operational system.

B. All fuses shall be furnished of the same manufacturer.

C. All fuses shall be installed by the electrical contractor at job-site and only when equipment is to be energized. Fuses shall not be installed during shipment.

D. All fuses to be 200,000 AIC, Current-limiting, U.L., Time Delay, Dual-element Type as follows:

For feeders 600 Amps and less:
Class RKk-1 for 600 volt; LPS-RK, LLS-RK, & A6D-R
Class RK-1 for 250 volt; LPN-RK, LLN-RK, & A2D-R
Class J; JHC, JTD, & AJT
For motor circuits beyond the main and sub distribution boards, 600 volt and below:
Class RK-5 for 600 volt; FRS-R, FLS-R, & TRS-R
Class RK-5 for 250 volt; FRN-R, FLN-R, & TR-R

E. SPARE PARTS: Provide 10% spare fuses, but not less than 3 of any one size and type. Deliver to owner storage area on the Camp Williams base as directed by Owner.

F. Approved Manufacturers, with catalog numbers listed in order: Bussman, Littelfuse, Ferraz Shawmut.

G. If the electrical contractor wishes to furnish materials other than those specified, a written request, along with a complete short circuit and selective coordination study, shall be submitted to the engineer for evaluation at least 8 days prior to the bid date. If the engineer's evaluation indicates acceptance, a written addendum will be issued listing the other acceptable manufacturer.

2.4 BOXES:

A. Outlet and junction boxes shall be sized in accordance with code requirements or as noted on the drawings.

B. Boxes which are exposed to the weather shall be cast metal.

C. Outlet boxes shall be designed for the intended use, and shall be installed straight with finish surface lines and shall be level and plumb. Long screws with spaces or shims for mounting devices are not acceptable. No combustible materials shall be exposed to wiring at outlets.

PART 3 - EXECUTION

3.1 GENERAL INSTALLATION METHODS:

A. All items, articles, materials, and equipment specified under this Division shall be installed per the manufacturer's installation instructions. Where the manufacturer's instructions are in conflict with the directions provided elsewhere in this Contract, the Engineer shall be notified prior to beginning rough-in.

B. Patch and correct finished surfaces damaged by electrical work, including landscape, concrete, asphalt, and existing devices.

C. Carefully protect trees, shrubs, and irrigation systems. Irrigation shall remain operational through the irrigation season, except for short periods approved by the guard. The contractor is responsible for any trees or shrubs that die due to trenching activities and lack of water.

D. Panels, cabinets and equipment shall be level and plumb and installed parallel with the support structure lines. All equipment and enclosures shall fit neatly without gaps, openings, or distortions. Provide approved devices for closing all unused openings.

E. Arrange circuit wiring as shown on the Drawings and do not alter or combine runs or homeruns without the specific approval of the Owner. Feeder runs shall not be recombined or altered.

F. Ballasts, contactors, transformers and like equipment which are found to be noticeably noisier than other similar equipment on the project will be deemed defective and shall be replaced.

G. In general, the mounting heights shall be as noted on the Drawings, or as listed below, the Architectural Interior Elevations and drawing notes taking precedence. Where no heights are indicated, request clarification from the Architect. Consult the Architectural, Mechanical and Structural drawings to avoid conflicts prior to roughing-in and for exact locations. All dimensions are to the top of the back box or device whichever is higher. Lighting dimensions are to the bottom of suspended fixtures and center of wall mounted fixtures unless otherwise noted.

Convenience Receptacles	18 inches to center
Outside Panelboard	60 inches to top
Outside Disconnects	48 inches to center

H. All materials and equipment installed under this work shall be properly and adequately supported from the ground and any built structure support except where other provisions are specifically designed to support them. Support systems shall provide a safety factor of four. This shall apply to hangers, anchors, clamps, screws, structural iron, and all other hardware and appurtenances associated with the support system.

I. Maintain the following minimum separations from voice and data conduits. Power conduit - 12".

3.2 LOW VOLTAGE WIRING METHODS:

A. Provide Conduit homeruns complete for all low voltage systems.

3.3 LABELING:

A. Clearly and properly label the complete electrical system to indicate the loads served or the function of each item of equipment provided under this work.

B. Permanent Engraved nameplates: shall be 1/16 inch thick, laminated three-ply plastic, center-ply white, outer-ply black (for normal power) or red (for emergency power) or orange (for UPS power) "Lamicoid" or equal. Letters shall be formed by engraving outer colored ply, exposing white center-ply, and shall be a minimum of 5/8 inch high. Nameplates shall be secured with screws or pop rivets.

C. Provide permanent engraved nameplates for the equipment listed below as well as all other similar equipment; refer to each section for specific labeling requirements:

1. Manholes

2. Medium Voltage Switches, Switchgear and Sectionalizing Cabinets

3. Panelboards

4. Transformers

5. Lighting Control Panels, Lighting Contactor Panels, and Timeclocks

6. Other similar electrical devices and equipment

D. Self-Adhesive Labels: shall have self-adhesive “P-Touch” or equivalent sticky backs, black lettering with a clear (see through) background.

E. Provide self-adhesive labels for the devices and equipment listed below as well as all other similar equipment; each label shall list the applicable circuit number feeding the device (for example, a receptacle fed from circuit 2 in panel 1P1 would read “1P1-2” on the label):

1. Power outlet receptacles

F. Where existing service entrance components are modified, including where conductors are increased in size, or the service transformer or service disconnecting means is replaced or increased in size, provide a new permanent engraved label on each service panelboard, and/or disconnecting means with required information as indicated by the National Electrical Code.

G. Provide neat and clearly legible handwritten labeling using a permanent “Sharpie” or equivalent chisel tip black marker for all junction boxes containing power and fire alarm wiring. Label each junction box with the applicable circuit number(s) for the cables contained within each junction box in a location and large enough to be clearly visible from the floor.

H. Provide a laminated copy of the electrical one line diagram(s), size of sheets as required to be clearly visible. Permanently mount within main electrical room, coordinate final location with architect.

I. Where changes are made in existing panels, etc., provide new labeling and schedules to accurately reflect the changes.

3.4 SAFETY:

A. The Engineer has not been retained or compensated to provide design and construction review services relating to the Contractor's safety precautions or to means, methods, techniques, sequences or procedures required for the contractor to perform the work.

3.5 DEMOLITION:

A. It is the intent of these specifications to require the contractor to make all necessary adjustments to the electrical system, required to meet code, and accommodate installation of the new and remodeled work.

B. Remove all existing switches, receptacles, raceways, and other electrical equipment and devices and associated wiring scheduled for remodeling, relocation, or demolition unless specifically shown as retained or relocated on the drawings.

C. If existing manholes and junction boxes will be made inaccessible, new conduit and wire shall be provided to bypass the inaccessable junction points, or the boxes shall be relocated and moved to remain accessable.

D. Locations of items shown on the drawings as existing are partially based on as-built and other drawings which may contain errors. The Contractor shall verify the correctness of the information shown prior to bidding and provide such labor and material as is necessary to accomplish the intent of the contract documents. The plans may show some demolition conditions, but are not intended to show all of them.

E. All materials accumulated during the demolition process are the Owners property and shall be removed from the job site as directed by the Owner. If owner does not wish to salvage materials, contractor shall remove from jobsite and dispose, or recycle materials at contractor's discretion, in a lawful manner.

F. Where changes are made in existing panels, distribution boards, etc., provide new labeling and schedules to accurately reflect the changes.

3.6 POWER INTERRUPTIONS:

A. Keep outages to occupied areas to a minimum and prearrange all outages with the Owner's representative and utilities involved. Requests for outages shall state the specific dates and hours and the maximum durations, with the outages kept to these specified times. When power interruptions will last longer than 5 minutes and cover more than 10% of the building, or affect public areas, they shall be performed at times directed by the Guard. Include the possibility of overtime for any outages required.

B. Contractor shall coordinate with the Owner so that work can be scheduled not to interrupt operations, normal activities, building access, etc. Coordinate work with other crafts for proper scheduling.

C. No circuits shall be turned off without prior approval from owner. Coordinate with the Owner any interruptions which affect the operation of the remaining portions of the facility.

D. This contractor will be liable for any damages resulting from unscheduled outages or for those not confined to the preapproved times. Include all costs for overtime labor as necessary to maintain electrical services in the initial bid proposal. Temporary wiring and facilities, if used, shall be removed and the site left clean before final acceptance. Requests for outages must be submitted at least (5) days prior to intended shutdown time.

3.7 GROUNDING:

A. Ground all electric equipment, raceways and enclosures in accordance with code rules and established safety practices.

B. Grounds shall be installed where accessible for future inspection and servicing. Where ground connections are made underground or in inaccessible locations, they shall be made using an exothermic weld process, Cadweld or equivalent, or Ampact pressure connectors.

C. Install grounding conductors in approved metallic raceways unless specifically shown or specified otherwise. Bond at each end and at all intervening boxes and enclosures between the service equipment and grounding electrode.

D. No. 8 and smaller grounding conductors shall have green insulation. No. 6 and larger shall be marked with green colored tape at each end and at every box, panel, switchboard, or point where conductor is accessible.

3.8 TVSS (Transient Voltage Surge Suppression) INSTALLATIONS

A. When TVSS units are specified, they are to be shipped with complete installation instructions which are to be followed in detail. The manufacturer's representative is always to be contacted and is to supervise the TVSS installation.

B. Supplemental installation information is as follows:

1. Use the breaker space closest to the neutral bus. Nipple the suppressor to the panel where the suppressor can be installed so as to keep both the hot leads and the neutral lead as short and straight as possible from the suppressor to the breakers and the neutral bus.

2. The best performance is achieved with the shortest leads and neutral. All efforts within the code should be used to minimize the lead lengths. Ideally the leads should be less than eight inches long. Each inch of lead above six inches will add approximately 20 volts to the quoted let-through voltage. Cut the leads down to the shortest size that will allow installation.

3. If the neutral bus is out of reach of the leads, then a #4 AWG conductor is to be run from the remote neutral bus to a lug near the suppressor, and the lead from the suppressor should be cut as short as possible.

4. The ground is to be connected to the case of the panel (equipment ground only). Do not connect the suppressor ground wire to an isolated ground (IG) bus.

3.9 EQUIPMENT CONNECTIONS:

A. The location and method for connecting to each item of equipment shall be verified prior to roughing-in. The voltage and phase of each item of equipment shall be checked before connecting.

B. Conduit, wire and circuit breaker sizes are based on the equipment ratings of one manufacturer. The equipment actually furnished may have entirely different electrical characteristics. Conduit, wire, circuit breakers, disconnects, etc. shall not be ordered or installed until exact electrical requirements are obtained. Responsibility for this coordination rests with the Contractor.

3.10 SEISMIC BRACING:

A. Furnish and install all seismic bracing of equipment, feeders, lighting fixtures, and other electrical items in accordance with prevailing codes. Refer to ASCE 7-05, section 13.6 for calculation methods. Provide and submit the required designs, calculations, certifications, and stamped drawings to the authority having jurisdiction and obtain their approval prior to installation or fabrication.

B. Where conduit, cable trays, or busducts are attached to structures where they cross a seismic isolation interface, the electrical components shall be designed to accommodate the seismic relative displacement.

3.11 PAINTING:

A. All electrical equipment and conduit exposed in finished areas and on exterior walls are to be painted to match surrounding surfaces.

B. Contractor shall coordinate the timing of painting requirements.

C. Refer to Architectural specifications for methods and materials.

3.12 PROJECT RECORD DOCUMENTS:

A. Maintenance of Documents:

1. Maintain at Jobsite, One Record Copy of: Contract Drawings, Specifications, Addenda, Reviewed Shop Drawings, Change Orders, Other Modifications to Contract and Field Test Records.

2. Keep apart from documents used for construction.

3. Keep documents available at all times for inspection by Architect.

B. Recording:

1. Label each document "PROJECT RECORD."

2. Keep record documents current. Do not permanently conceal any work until required information has been recorded.

3. Contract Drawings, legibly mark to record actual construction; including but not limited to the following:

a. Depths of various elements; locations of underground items, with dimensions to building walls and corners; changes of dimensions and details; changes made by Addendum, Field Orders or Change Order.

b. Specifications and Addenda; legibly mark each Section to record changes made by Addendum, Field Order or Change Order.

C. As-Built Submittals:

1. On completion of work, provide a set of CAD disks of Electrical Drawings. Revise the files using AutoCAD, ArcView GIS, or similar CAD software to show all changes, addenda items, variations from design drawings and exact routes of all feeders, service conduits, and locations of stubbed conduits. Include dimensions to all buried or concealed conduits to permanent structures. Include Depths of buried ductbanks, and any unforeseen crossings of other hidden utilities.

2. Deliver the revised files on CD or DVD disks, both in AutoCAD (.dwg) and Acrobat Reader (.pdf) formats, together with 1 set of reproducible prints, to Architect as "As-reported Record" drawings.

D. Operation and Maintenance Manuals

1. At completion of project, prepare Operation and Maintenance Manuals with operation and Maintenance Data, contractors warranties, and copies of approved electrical permits. Include corrected copies of original submittals and shop drawings.

2. See Division 1 for additional requirements.

3.13 WARRANTIES:

A. Provide a minimum 1 year warranty on all electrical equipment, devices, labor, and work by Division 26 whether specified or not.

B. Provide warranties greater than 1 year as specified in other sections where stated. The warranty requirement most stringent shall be used where conflicts arise.

C. The systems listed below require warranties exceeding the minimum warranty:

1. Surge Protective Devices (TVSS); 5 years refer to Section – 26 43 00

2. Lighting; 5 years for ballasts refer to Section – 26 51 00

D. Provide copies of all warranties to the owner upon completion of the project.

3.14 COMPLETION:

A. Complete each system as shown or specified herein and place in operation except where only roughing-in or partial systems are called for. Each system shall be tested and left in proper operation free of faults, shorts or unintentional grounds. Demonstrate system in the presence of the Owner or their representative when requested.

3.15 FINAL OBSERVATION:

A. Contractor shall submit written certification that:

1. Contract Documents have been reviewed.

2. Contractor has inspected Project for compliance with Contract Documents.

3. Work has been completed in accordance with Contract Documents.

4. Equipment and Systems have been tested and are operational.

5. Project is completed and ready for final inspection.

B. Ownder will make final inspection as soon as possible after receipt of Certification.

C. Should Owner consider that work is finally complete in accordance with Contract Document requirements, Contractor shall make Contract Closeout submittals.

D. Should Owner consider that work is not finally complete:

1. He will so notify Contractor, stating reasons.

2. Contractor shall take immediate steps to remedy deficiencies, and send second written notice to Architect certifying that work is complete.

3. Owner will re-inspect work.

E. The Owner will make two final inspections. The first will determine deficiencies and errors in the work and the second will determine whether or not the noted deficiencies and errors have been satisfactorily corrected.

F. If additional inspections are required because of the Contractor's failure to complete the deficiencies and errors prior to the second inspection, costs for the successive inspections will be back-charged to the Contractor by the Owner will reimburse the Architect. Charges will be based as follows:

1. Owner time at current billing rates.

2. Travel time, and all other expenses incurred in making inspections.

G. Contractor to provide one (1) journeyman, tools, meters, instruments and other test equipment required by Owner. Contractor to remove and replace trims, covers, fixtures, etc., for Owner to review and test materials, systems, methods and workmanship. (Example: Removing switchboard and panel covers to take voltage/amp readings, review connections and wire size, etc.)

END OF SECTION

SECTION 26 05 13 – WIRES AND CABLES OVER 600 VOLTS

PART 1 - GENERAL

1.1 WORK INCLUDED:

A. Provide all medium voltage 15 kV wires and cables as herein specified and shown on the associated drawings. It is intended for rerouting and relocating the transformer that may be in the way of the roadway design.

B. Provide all required terminations, raceway, mounting equipment as required for a complete medium voltage wiring system. Do not splice the wire.

C. Provide all required testing and testing reports as herein specified and shown on the associated drawings.

1.2 RELATED WORK SPECIFIED ELSEWHERE:

A. Basic Materials and Methods – Section 26 05 00.

B. Raceways – Section 26 05 33.

1.3 QUALITY ASSURANCE:

A. All cable shall conform to the current standards: Insulated Cable Engineers Association (ICEA), Association of Edison Illuminating Companies (AEIC), National Electrical Code (NEC), and be U.L. listed.

B. Each reel of cable furnished shall be newly manufactured (no more than 12 months old) and shall bear a tag containing the name of manufacturer, NEC designation and year of manufacture.

1.4 SUBMITTALS:

A. Submit complete and descriptive shop drawings indicating compliance with the specifications herein as well as any additional information. Include submittals for all cables, terminations and splices.

B. Include shop drawings for termination products to each existing switch after field verifying the termination product on the existing switches.

PART 2 - PRODUCTS

2.1 ACCEPTABLE MANUFACTURERS:

A. Subject to the final approval and acceptance by the Owner, provide cable products from one of the following manufacturers:

1. General Cable

2. Okonite

3. Kerite

B. Subject to the final approval and acceptance by the Owner, provide molded product deadbreak and loadbreak termination products from one of the following manufacturers:

1. Thomas and Betts Elastimold

2. Cooper

3. 3M

C. Requests for substitution of other products will be considered if submitted in accordance with the General Conditions, Division 01, and Section 26 05 00 to the owners office within (8) business days prior to the bid opening day.

2.2 MEDIUM VOLTAGE WIRES & CABLES:

A. Provide single conductor cables only, (3) conductor cables are not allowed.

B. Conductor shall be stranded, 350 KCM aluminum conductor, covered with an extruded semi-conducting EPR strand screen, 220 mil ethylene propylene rubber insulation extruded EPR semi-conducting insulation screen, 5 mil bare copper shielding tape with 12-1/2% minimum overlap, with 80 mil flame retardant PVC jacket overall, 15kV type, ungrounded neutral, 133% insulation level.

C. Conductor strand screen, insulation and insulation screen shall be extruded simultaneously (triple tandem extrusion). Color differentiation shall be accomplished by using black semi-conducting layers and red insulation.

2.3 MEDIUM VOLTAGE TERMINATIONS:

A. Provide terminations as shown on the associated drawings and as required for the complete installation of the cable system.

B. Terminations at 600 amp switched ways of VFI switches shall be 600 amp deadbreak molded products. Terminations at 200 amp load taps at VFI switches shall be 200 amp loadbreak molded products.

C. Terminations at existing switches shall be as required to terminate to the existing switch and shall match the existing switch termination type, confirm termination type for all existing switches prior to submittals to ensure compatibility.

2.4 REUSE OF CABLE AND SPLICE OPTIONS:

A. Splices are not allowed. Replace conductor for entire length. Reuse of old cable is not allowed. Replace conductor for entire length.

PART 3 - EXECUTION

3.1 GENERAL INSTALLATION METHODS:

A. Cable shall be installed in rigid metallic conduit as shown on drawings. All conduits shall have a minimum bending radius of five feet.

B. Cables shall loop all manholes they enter or exit a minimum of (1) complete 360 degree loop. Cables installed directly through a manhole are not acceptable.

C. Terminate cable in stress cones and/or load break ells at transformers and pad mounted switchgear as applicable.

D. Splices shall not be allowed in raceway. Splices in vaults shall be racked to vault walls on porcelain insulators.

E. All terminations shall be taped and wrapped per manufacturer's instructions and industry standards

F. All medium voltage cabling within manholes, vaults, electrical rooms and other similar exposed areas shall be fire taped per manufacturer's instructions and industry standards for the entire length of cable within the space.

G. Feeders within manholes shall be color coded, phase 1 Red, phase 2 Yellow, phase 3 Blue.

3.2 LABELING:

A. Provide a 1/16" thick x 2" tall x 3" wide laminated three-ply plastic, center-ply black, outer-ply yellow "Lamicoid" or equal. Letters shall be formed by engraving outer yellow ply to expose black lettering. Lettering shall be a minimum of ½" high. Attach label by drilling a small hole in one corner of the label and affixing the label to the cable with the use of wire-ties or equivalent.

B. Labels shall be provided for each cable at the following locations:

1. In the manhole or vault within 12" to 24" of where the cable enters and exits the manhole or vault where easily visible.

2. Within approximately 36" of termination on each switch or transformer where easily visible.

3. Each individual phase shall be provided with it's own label at the required locations.

C. Label information shall be coordinated with the Owner prior to creation of labels and will include at minimum: Feeder name (for example – F3), phase (for example - Phase 1), cable construction type (for example – EPR), cable size (for example #350) and date of cable installation (for example - 11/01/2013).

3.3 TESTING:

A. Prior to the final inspection, test the installed new cables and wires and any existing cables and wires which are reconnected for this contract.

B. Prior to energizing the cables and wires, check for correct connections and test for short circuits, ground faults, continuity and insulation.

C. Test the insulations of the installed cables by standard high potential methods with DC voltages. Exercise suitable and adequate safety measures prior to, during and after the high potential tests including placing warning signs and preventing people and equipment from being exposed to the test voltages. Prior to applying the test voltages to the cables, disconnect all equipment that might be damaged by the test voltages. DC test voltages for the new cables shall be the AEIC and IPCEA standard, final-factory, AC, test voltages for the cables multiplied by 2.4.

D. DC test voltages for the existing cables shall be the AEIC and IPCEA standard, final-factory, AC, test voltages for the cables multiplied by 1.8.

E. AEIC and IPCEA standard, final-factory, AC, test voltages are approximately two to four times the AC voltage ratings for the cables. DC test voltages will be approximately two to four times the AC voltage ratings for the cables times the ratios indicated above.

F. Increase and decrease the test voltages on the cables (between the voltage levels at which the test readings are made) at a rate of not more than 200 volts per second. Monitor the testing equipment closely and stop applying the test voltages when the equipment indicates that the leakage currents are increasing excessively.

G. Where weak points are detected in the existing cables, notify the Engineer accordingly. The Engineer will determine what should be done about defective existing cables.

H. Where weak points are detected in the new cables, eliminate the weak points and replace the cables.

I. Maintain the maximum test voltage for five minutes for each test.

J. Read and record the test voltages and leakage currents for the cables being tested at approximately 4000 volt intervals, starting and finishing with zero test voltages. Allow the charging currents to diminish before reading the meter so that correct values can be determined for the leakage currents.

K. Plot curves for the test voltages and leakage currents on a separate graph for each test. Use log-log graph paper with time and voltage along the horizontal axis and current along the vertical axis, one curve for current versus voltage, and one curve for current versus time.

L. Submit four certified copies of each of the graphs to the Engineer, with adequate information shown for identifying the cable locations, types, voltage ratings and sizes.

M. Furnish certified test reports of all applicable tests per AEIC and IPCEA to the purchaser at the time of delivery. A copy of the original X-Y plot showing discharge levels shall be submitted at time of delivery

3.4 WARRANTY:

A. Cable shall carry a two-year warranty after shipment.

B. General 1 year warranty shall apply to installation and other products and installation used under this section.

END OF SECTION

SECTION 26 05 19 – WIRES & CABLES (600V)

PART 1 - GENERAL

1.1 WORK INCLUDED:

A. Provide all wires and cables as herein specified and shown on the associated drawings for service conductors, feeder conductors and branch circuit conductors.

1.2 RELATED WORK SPECIFIED ELSEWHERE:

A. Basic Material & Methods – Section 26 05 00.

B. Raceways – Section 26 05 33.

1.3 QUALITY ASSURANCE:

A. All wire and cable shall meet or exceed the following standards:

1. ASTM-B series specifications

2. ICEA S-61-402/NEMA WC 5 - Thermoplastic insulated cables 0-2000 volt

3. UL Standard 62 and 83 – Thermoplastic insulated cable

4. UL VW-1 Flame Test for sizes #12 through #1

5. National Electric Code (NFPA 70) – Latest edition

B. Manufacturer's shall be engaged in the manufacturing of industry accepted quality wires and cables for a period of no less than 5 years for all types and sizes required.

1.4 SUBMITTALS:

A. None required.

PART 2 – PRODUCTS

2.1 ACCEPTABLE MANUFACTURERS:

A. Provide products of Southwire, Houston Wire, Rome Cable, or similar manufacturer located within the continental North American market. Cables made in Europe, Asia, South America, Africa, or other overseas markets are not acceptable.

B. Substitutions: Equivalent manufacturers are allowed at contractors option, no submittals or prior approvals are necessary if cable meets specifications.

2.2 MATERIALS:

A. Application: For use in general wiring applications for lighting and power in ducts, conduits, wireways and other approved raceways with a maximum conductor temperature of 90 degrees C in dry locations and 75 degrees C in wet locations.

B. Provide wires and cables that are chemical, gasoline, and oil resistant. Provide wires and cables that are sunlight resistant.

C. Minimum conductor size shall be No. 12 AWG unless otherwise noted.

D. Where adverse conductor exposure exists, code approved insulation suitable for the conditions encountered shall be used unless shown otherwise on the Drawings.

E. Wire and cable shall be new, shall have grade of insulation, voltage and manufacturer's name permanently marked on outer covering at regular intervals and shall be delivered in complete coils or reels with identifying size and insulation tags.

2.3 COPPER CONDUCTORS:

A. For No. 10 AWG and smaller provide soft drawn solid copper conductors with type THHN/THWN insulation

F. For No. 8 AWG and larger provide soft drawn stranded, Class B stranded copper conductors with type THHN/THWN insulation.

2.4 ALUMINUM CABLING OPTIONS:

A. Aluminum Wire acceptable for No. 1/0 or larger conductors only, aluminum wire is not acceptable for conductors smaller than No. 1/0. Wire sizes are based on copper wire unless otherwise noted. Stranded aluminum alloy wire equal to Stabiloy may be used in dry locations if No. 1/0 or larger and terminated in compression fittings. Mechanical lug connectors are not acceptable.

B. Aluminum conductors shall be increased in size so that they will have equal or greater ampacity than the copper conductors indicated on the drawings. Conduit sizes shall also be increased in size to ensure less than 40% fill ratio.

2.5 COLOR CODE:

A. All wire shall be fully colored in sizes 12 and 10 AWG, and color banded at each end and at all junction and pull boxes for size 8 AWG and larger.

C. Color Code throughout the project shall be:

1. 480Y/277V System

Phase A	Brown
Phase B	Orange
Phase C	Yellow
Neutral	Grey
Neutral A (dedicated)	Grey w/brown stripe #12 & #10
Neutral B (dedicated)	Grey w/orange stripe #12 & #10
Neutral C (dedicated)	Grey w/yellow stripe #12 & #10
Equipment Ground	Green

2. 208Y/120V System

Phase A	Black
Phase B	Red
Phase C	Blue
Neutral	White
Neutral A (dedicated)	White w/black stripe #12 & #10
Neutral B (dedicated)	White w/red stripe #12 & #10
Neutral C (dedicated)	White w/blue stripe #12 & #10
Equipment Ground	Green
Isolated Ground	Green w/yellow stripe #12 & #10
	Green and Yellow bands #8 and up

C. Provide a permanent, plastic engraved label on the inside of each branch-circuit panelboard throughout the project identifying the Color Code used throughout the project. Refer to NEC 200.6 (D).

2.6 SPLICES AND TERMINATIONS:

A. Splices shall utilize Scotch "Hyflex" or "Ideal" wing nut connector installed properly. Crimp on splices designed to be used without wire stripping are not acceptable.

B. Splices for No. 8 and larger wires shall be made with mechanically applied pressure type connectors.

C. All taped joints shall be with "Scotch 33+" or equal, applied in half-lap layers without stretching to deform.

D. Where splice box is subject to rain, weather, or moisture, provide “Rain Tight” termination device.

PART 3 - EXECUTION

3.1 INSTALLATION

A. Inspect exposed cables for physical damage and remove as length allows.

E. Utilize pulling compound on long pulls.

C. Do not exceed manufacturers minimum bending radius or tension during installation.

D. Provide dedicated neutrals on all branch power receptacle circuits of 120/208 volt.

3.2 BRANCH CIRCUIT GROUNDED CONDUCTOR (NEUTRAL) WIRING METHODS:

A. Dedicated (separate) neutral wiring methods

1. Provide dedicated neutral wiring for the following system(s):

a. Lighting

b. Receptacles

c. Other than lighting and receptacle branch circuits

2. Provide dedicated (separate) neutral for each branch circuit; shared/common neutral wiring is not allowed.

3. For dedicated neutral branch wiring, there shall be no more than six (6) current carrying conductors allowed within a single raceway unless specifically allowed otherwise in the drawings. All neutral conductors shall be considered current carrying. Provide all required wire size increases to account for the applicable NEC wire ampacity deratings.

4. Provide dedicated neutral cables with colored stripe as required in wire color coding section for identification.

B. Shared neutral wiring methods: Not allowed, except for 3 pole breaker exterior lighting systems.

1. Shared neutral wiring is permissible for the following systems:

a. Exterior Lighting Circuits controlled via 3 pole breaker

2. No more than three (3) ungrounded current carrying conductors may share a single neutral conductor.

3. No more than four (4) current carrying conductors may be installed within a single raceway unless specifically allowed otherwise in the drawings. All neutral conductors shall be considered current carrying for this purpose. Provide all required wire size increases to account for the applicable NEC wire ampacity deratings factors.

4. A grouped disconnecting means shall be provided in compliance with NEC 210.4(B) within the serving panelboard that will simultaneously disconnect all ungrounded conductors of the multiwire branch circuit. This may be accomplished utilizing 3 pole circuit breaker or breaker tie handles. Number of poles and quantity of breakers or tie handles shall be as required for the installation.

5. Group all grounded and ungrounded conductors of each multiwire branch circuit within the panelboard with wire ties as per NEC 210.4(D).

3.3 SPLICES AND TERMINATIONS:

A. Splices are to be made up complete promptly after wire installation.

B. Single wire pigtails shall be provided for fixture and device connections. Wirenuts may be used for fixture wire connections to single wire circuit conductor pigtails.

C. Install wing nut connector properly, according to manufacturers written instructions. Crimp on splices designed to be used without wire stripping are not acceptable.

D. Torque bolted connections to manufacturers recommendations.

E. Insulation shall be removed with a stripping tool designed specifically for that purpose. A pocket knife is not an acceptable tool. All conductors shall be left nick-free.

F. Thermoplastic insulated wire and cable shall not be installed or handled in temperatures below +14 degrees F (-10 C). Cross-linked polyethylene insulated wire and cable may be installed to -40 degrees F (-40 C).

G. Aluminum wire splices and terminations shall utilize tool applied compression type copper-aluminum lugs containing "Penetrox" or other approved oxidation inhibitor. Aluminum terminations on studs shall have properly sized Belville washers to each lug. Aluminum terminations in set screw lugs on molded case circuit breakers, transfer switches, etc. shall utilize Burndy type AYP "Hyplug" terminators or Square D type VC compression lugs.

3.4 LABELING:

A. Feeders – Provide an engraved laminated 3-ply plastic “Lamicoid” or equal label with feeder name attached with a nylon wire tie to the feeder at each entry and exit from pullboxes, wireways and any other similar locations.

B. Branch Circuits – Clearly mark and identify the circuit number(s) at each junction box and similar location with a permanent black marker or equivalent that is clearly visible. For concealed junction boxes the marking shall be made on the outside coverplate; for exposed boxes or boxes with finished coverplates marking shall be made on the interior of the box where visible when removing the coverplate.

3.5 COMMISSIONING AND TESTING:

A. Contractor shall provide for access and inspection of installed wires and cables by the Architect/Engineer, owner and commissioning agent.

B. Document all tests and provide written copies in the O&M manuals.

C. Perform continuity tests and resistance measurements through bolted connections to ensure correct cable connections.

D. Perform insulation resistance test on all feeder conductors exceeding 100 amps, size #2 and larger. Values shall not be less than 50 megaohms.

END OF SECTION

SECTION 26 05 26 – GROUNDING AND BONDING

PART 1 - GENERAL

1.1 WORK INCLUDED:

A. Provide all grounding and bonding as code required and as herein specified and shown on the associated drawings.

1.2 APPLICATION:

A. All grounding and bonding shall be by copper only connectors, copper cable and wire, and/or copper braids.

1.3 RELATED WORK SPECIFIED ELSEWHERE:

A. Basic Material & Methods – Section 26 05 00.

B. Wires & Cables – Section 26 05 19.

1.4 QUALITY ASSURANCE:

A. All installation of grounding and bonding conductors shall meet or exceed the following standards:

1. Exceeds ANSI/IEEE 142 for service ground electrode resistance (2.5 ohms rather than 5 ohms).

2. ASTM B 8 stranded conductors

3. ICEA S-61-402/NEMA WC 5 - Thermoplastic insulated cables 0-2000 volt

4. UL Standard 62 and 83 – Thermoplastic insulated cable

4. UL VW-1 Flame Test for sizes #12 through #1

5. National Electric Code (NFPA 70) – Latest edition

6. UL listing is required

B. Manufacturers shall be engaged in the manufacturing of industry accepted quality grounding connectors for a period of no less than 5 years for all types and sizes required.

1.5 SUBMITTALS:

A. None required.

PART 2 - PRODUCTS

2.1 GROUNDING CONNECTORS AND GROUND RODS:

A. ACCEPTABLE MANUFACTURERS: Subject to compliance with all requirements, provide products of one of the following manufacturers for grounding connectors or ground rods:

a. Chance/Hubbell

b. Copperweld Corporation

c. Erico Inc., Electrical Products Group

d. Burndy Electrical

e. Kearney/Cooper Power Systems

f. O-Z/Gedney Co

g. Raco/Hubbell

h. Thomas & Betts Electrical

B. Provide products of a quality manufacturer located within the continental North American market. Grounding connectors made in Europe, Asia, South America, Africa, or other overseas markets are not acceptable.

C. Provide products that are listed and labeled by UL for all applications used, and for specific types, sizes and combinations of conductors and other items connected.

D. For buried connections, provide crimp style connections or welded type connections. For accessible connections, provide bolted pressure-type, torque as per manufacturers recommendations.

E. Substitutions: Equivalent manufacturers are allowed at contractor's option, no submittals or prior approvals are necessary if ground connectors and rods meet specifications.

2.2 CONDUCTORS:

A. Provide copper or tinned-copper wire and cable insulated for 600 volt unless otherwise required by applicable code or authorities with jurisdiction.

B. Provide minimum of #6 AWG copper stranded grounding electrode conductor for the portion of the conductor which is the sole connection to the ground rod grounding electrode. Where this conductor is not the sole connection to a single ground rod (for example if the conductor connects multiple grounding electrodes in series), then the minimum conductor size shall comply with NEC table 250.66.

C. Provide No. 4 and/or No. 6 AWG stranded conductor for bonding conductors.

D. Bonding Jumper: Provide copper tape, braided copper conductors, terminated with copper ferrules, 1-5/8 inches wide and 1/16 inch thick.

E. Where specified for lightning protection systems, provide listed conductors as specified in the Lightning Protection specification.

PART 3 - EXECUTION

3.1 GROUNDING INSTALLATION:

A. Ground all electric equipment, raceways and enclosures in accordance with code rules and established safety practices. All grounding systems inside the building must be bonded to the main power service ground, including telecomm closets, TV cabling entrances, lightning protection systems, and computer data center grounds. es

B. Install insulated equipment grounding conductors in all types of raceways for all power feeders and branch circuits

C. Route grounding electrode conductors along the shortest and straightest paths possible, unless otherwise indicated. Avoid obstructing access or placing conductors where they may be subject to strain, impact, or damage.

D. Grounding electrode conductors and bonding jumper connections to grounding electrodes shall be accessible (unless allowed by NEC 250.68(A) exceptions) and provide a continuous effective grounding path.

E. Where ground connections are made underground or in inaccessible locations, they shall be made using an exothermic weld process, Cadweld or equivalent, or Ampact pressure connectors.

F. Install main grounding electrode conductors in approved metallic raceways unless specifically shown or specified otherwise. Bond at each end and at all intervening boxes and enclosures between the service equipment and grounding electrode.

G. No. 8 and smaller grounding conductors shall have green insulation. No. 6 and larger shall be marked with green colored tape at each end and at every box, panel, switchboard, or point where conductor is accessible.

H. Provide bonding jumpers to steel structure as indicated on the plans. Use exothermic welded connectors for steel connections below slab, and/or bolted clamp connections where accessible above slab.

I. For equipment subject to vibration, install bonding jumper so that vibration is not transmitted through the grounding connection.

3.2 GROUND RODS

A. Grounds rods shall be installed where accessible for future inspection and servicing, located in a “ground rod well” where located exterior. Install Ground rod well flush with grade.

B. Where ground rods are driven inside manhole or tunnel structures, leave 4 inches of exposed ground rod above the concrete floor.

3.3 CONNECTIONS

A. For equipment grounding connections #10 and smaller, grounding conductors may be terminated with appropriate winged pressure type connectors (wirenuts). For #8 and larger, use pressure-type grounding lugs.

B. For Service metal conduits, and where metallic raceways terminate at metal housings without appropriate electrical connection to housing, terminate each conduit with an insulated throat grounding bushing. Connect grounding bushing with a bare copper grounding conductor to grounding bus and/or grounding terminal electrically bonded to housing.

C. Tighten screws and bolts for grounding and bonding connectors and terminals according to manufacturers published torque-tightening values. If manufacturers data is not available, tighten according to UL468A.

D. For compression type connections, use hydraulic compression tools and dies to provide the correct circumferential pressure for all connectors. Use only tools and dies as recommended by the connector manufacturer. Provide embossing die code or other standard method to make a visible, permanent indication that a connector has been adequately compressed onto the grounding conductor.

3.4 COMMISSIONING AND TESTING:

A. Contractor shall provide a time for access and inspection of grounding system for the Owner, telecommunications installer and the commissioning agent. Correct all defects and flaws found prior to testing.

B. Test all grounding systems per NETA 7.13 Inspection and Test Procedures.

C. Demonstrate electrical continuity at selected connections to the commissioning agent using an electrical ohmmeter. Point to point resistance values shall not exceed 0.5 ohms. Provide additional bonding as necessary to ensure these resistance values are less than 0.5 ohms.

D. Demonstrate that electrical service entrance ground does not exceed 2.5 ohms. If it does, provide additional electrode conductor, ground rods, and other mitigation methods to ensure that service entrance grounding electrode will read below 2.5 ohms to ground.

END OF SECTION

SECTION 26 05 33 - RACEWAYS

PART 1 - GENERAL

1.1 WORK INCLUDED:

A. Provide all raceways, wireways, and associated fittings as herein specified and shown on the associated drawings.

1.2 APPLICATION:

A. Electric metallic tubing (EMT), galvanized rigid conduit (GRC), intermediate metal conduit (IMC), flexible metal conduit, and PVC conduit may be used.

B. Schedule 40 PVC conduit may only be used below grade and below slabs on grade. PVC shall not be used above grade. PVC shall not be used in masonry walls and shall not be used in suspended slabs. Conduits larger than 1 inch may be run below the slab. Type EB and DB utility duct shall not be substituted for Schedule 40 PVC.

C. GRC and IMC shall be used in locations subject to mechanical injury, for penetrations of building and manhole walls, and for service conduit under concrete slabs. GRC and IMC may be used: outside, where exposed to weather, in wet locations, in hazardous locations (as approved by code). Schedule 80 PVC may not be substituted for GRC and IMC.

D. EMT may not be used outdoors.

E. Liquid-Tight Flexible Metal Conduit (LFMC) shall substitute only in those locations where flexible metal conduit is required and additional moisture protection is desired or needed. LFMC may be used: for connections to motors or fixed equipment where subject to moisture or weather and subject to movement or vibration. Length shall not exceed 6 feet unless specified otherwise.

F. Drawing notes requiring a specific type of raceway shall take precedence over the specifications.

G. Surface metal or Plastic raceways (Wiremold) shall not be used.

H. Electrical wiring shall be in U.L. approved raceways and enclosures throughout.

I. 4" and larger conduits intended for use on primary services and communications services shall have minimum 48" radius sweep on all bends.

1.3 RELATED WORK SPECIFIED ELSEWHERE:

A. Basic Material & Methods – Section 26 05 00.

B. Wires and cables (600V) – Section 26 05 19.

C. Ductbanks – Section 26 05 39

1.4 QUALITY ASSURANCE:

A. All installation of conduits and raceways shall meet or exceed the following standards:

1. Polyvinyl Chloride (PVC): in accordance with ANSI C80.1 and NEMA Std. Pub. No. RN 1.

2. Rigid Metal Conduit (RMC): in accordance with ANSI C80.1.

3. Electric Metallic Tubing (EMT): in accordance with ANSI C80.3.

4. Seismic Bracing: ASCE 7-05, Section 13.6, latest edition

5. National Electric Code (NFPA 70) – Latest edition

6. UL listing is required

B. Manufacturer's shall be engaged in the manufacturing of industry accepted quality raceway for a period of no less than 5 years for all types and sizes required.

1.5 SUBMITTALS:

A. Not required.

PART 2 – PRODUCTS

2.1 ACCEPTABLE MANUFACTURERS:

A. Provide products of a quality manufacturer located within the continental North American market. Conduit and Raceways made in Europe, Asia, South America, Africa, or other overseas markets are not acceptable.

B. Substitutions: Equivalent manufacturers are allowed at contractor's option, no submittals or prior approvals are necessary if conduit and fittings meet specifications.

2.2 RACEWAYS:

A. Galvanized Rigid Metal Conduit (GRC): Provide zinc-coated, hot-dipped galvanized, rigid metallic conduit in sizes indicated on the drawings. Provide RMC in ¾ inch minimum size.

B. Intermediate Metal Conduit (IMC): Provide hot-dipped galvanized, intermediate metal conduit in sizes indicated on the drawings. Provide IMC in ¾ inch minimum size.

I. Liquid-Tight Flexible Metal Conduit: Provide liquid-tight, flexible metal conduit, constructed of single strip, flexible continuous, interlocked, and double-wrapped steel, galvanized inside and outside, coated with liquid-tight jacket of flexible Polyvinyl Chloride (PVC). Provide Liquid-Tight Flexible conduit in ¾ inch minimum size.

J. Provide Schedule 40 PVC conduit (where installed below grade or below slab on grade) in one inch minimum size.

K. Aluminum conduit is not acceptable.

L. Provide PVC conduit in one inch minimum size.

2.3 FITTINGS:

A. Die-cast fittings or fittings made from pot metal shall not be allowed. Indenter type fittings are not acceptable

B. Connectors larger than 1-1/4 inch shall utilize equivalent of O-Z/Gedney type SBT/SB insulated bushings.

C. GRC and IMC shall be coupled and terminated with threaded fittings. Provide fully-threaded, malleable steel fittings, rain-tight and concrete-tight as applicable. Provide double locknuts and metal bushings at all conduit terminations. Ends shall be bushed with insulating bushings (OZ Gedney type B or equal).

D. PVC shall be provided with matching schedule 40 fittings.

E. LFMC fittings shall be in accordance to industry standards.

F. Sealing bushings are to be provided equal to O-Z/Gedney Type FSK, WSK or CSMI as required by application. Provide equal to O-Z/Gedney Type CSB for internal sealing busings.

G. Expansion fittings shall be equal to O-Z/Gedey AXDX.

H. Cable Supports: Provide OZ Gedney, or equivalent cable supports for vertical risers, type as required by application.

I. Aluminum conduit fittings are not acceptable.

2.4 SEISMIC BRACING COMPONENTS

A. Provide the following components for vertical support and lateral/longitudinal seismic bracing:

1. Strut: Unistrut (or equal) P1000 Metal Framing Channel

2. Allthread: Stainless Steel, 3/8 minimum size

3. Angles/Hinges: Bline B335-2 or Mason Industries SCB Swivel Anchor

4. Expansion anchors: Hilti Kwik Bolt II (or equal) minimum 3/8 inch x 2-1/4 inch depth

Hardware: Miscellaneous cap screw/spring nuts and other hardware required for a complete system.

2.5 BOXES

A. Refer to section 26 05 00 for appropriate boxes.

PART 3 - EXECUTION

3.1 INSTALLATION:

A. For exterior conduits, provide concrete pull boxes where shown or required to limit the number of bends in any run to not more than one 90 degree bends.

B. Exposed raceways shall be parallel to support lines and location must be approved by Owner prior to installation.

C. Maintain a minimum of 12 inches spacing from water, sewer, irrigation, and other utilities. Do not support conduit from other utility services.

D. 4" and larger conduits intended for use on primary services and communications services shall have minimum 48" radius sweep on all bends.

E. Field bends and offsets shall be made without flattening, kinking, rippling or destroying the smooth internal bore or surface of the conduit and to not less than NEC minimum radius. Conduit that shows signs of rippling or kinking shall not be installed. Any conduits installed with wrinkles or kinks or otherwise in an unworkmanlike manner shall be replaced at no additional cost to owner.

F. Precaution shall be exercised to prevent accumulation of water, dirt, concrete, or other foreign matter in the conduits during the execution of the project. Conduits in which water or foreign matter has been permitted to accumulate shall be thoroughly cleaned or the conduits runs replaced where such accumulation cannot be removed by methods approved the engineer.

G. Permanently cap all spare conduits. Cap or plug conduit ends during construction to prevent entrance of foreign material.

H. Provide ground wire within all power conduits sized per NEC code.

3.2 SUPPORT AND SEISMIC BRACING INSTALLATION:

A. Conduit racks shall be adequately braced for Seismic Restraint, as required per ASCE 7-05, Section 13.6, latest edition.

3.3 FIELD CUTS AND THREADS:

A. Cut all conduits perpendicular and square. Remove all sharp or rough edges and ream all burrs, inside and outside.

B. Provide clean sharp threads on RMC and IMC. Engage at least five full threads on all RMC and IMC fittings.

C. Before couplings or fittings are attached, apply one coat of red lead or zinc chromate to male threads of RMC or IMC.

D. Apply coat of red lead, zinc chromate or special compound recommended by manufacture to conduit where conduit protective coating is damaged.

3.4 CONDUITS BURIED BELOW GRADE (SINGLE CONDUITS LESS THAN 3 INCHES)

A. Refer to Ductbanks section 26 05 34 where concrete encasement is called out. All multi-conduit medium voltage base power distribution must be concrete encased.All

multiconduit telecommunications conduits may be “capped with concrete” rather than full encasement. See plans for additional details. Encasement is also required for building or site lighting service entrances. Elsewhere on site, provide concrete encasement for single power conduits where size is 3 inches and larger.

B. Where PVC conduit is below building slab on grade, conduit must be installed to be at least 2 inches below the slab. Provide 2 inches of sand or pea sized gravel to cover conduit. Protect conduit from vehicle traffic and construction traffic prior to concrete pour. Conduit poured inside the slab for slab on grade construction is not acceptable.

C. Elbows larger than 30 degrees and one inch shall be galvanized rigid conduit, wrapped with PVC tape.

D. Provide a ground wire sized per code in all PVC conduits intended for power circuits when pulling wire. Conductor quantities indicated in conduits do not include ground wires unless otherwise noted.

E. Provide trenching, backfilling, compaction, re-paving or other site restoration as required by the work done in this division. Minimum trench depth shall be as required to install conduit at 24" below grade to top of conduit unless otherwise noted.

I. Install a detectable 6 inch wide yellow vinyl tape with letter "Caution: Buried Electrical Line Below" 12 inches above all buried service conduit and wire not under structures.

J. Backfill material for all trenches under paved areas shall be coarse sand or crushed rock, installed in layers not to exceed eight inches and compacted to 95% of maximum density at optimum moisture content to preclude subsequent settlement. Compaction by water method. The top 18 inches of trenches in landscaped or grassed areas shall be backfilled with native soil and tamped.

K. All underground conduits entering a concrete manhole or vault shall be poured-in-place, or provided with watertight conduit sleeves and rubber seals, Link-seal system by Thunderline Corporation or equivalent.

3.6 CLEANING:

A. Pull a mandril and swab through all conduits before installing conductors. Raceways shall be left clean and free of debris.

B. Provide a pull string in all empty conduits.

3.7 COMMISSIONING AND FINAL INSPECTION:

A. Contractor shall provide a time for access and inspection of raceway system for the Owner, telecommunications installer and the commissioning agent. Correct all defects and flaws found prior to wall and ceiling installation and prior to cabling installation.

B. Demonstrate electrical continuity at selected joints to the commissioning agent using an electrical ohmmeter.

C. Demonstrate rigid seismic bracing to ensure minimal movement of the raceways on suspended racks in a seismic event. Demonstration shall be by pushing with at least 25 pounds force laterally and longitudinally at selected (mid-span) locations along the length of the suspended raceway rack. Rack shall not move more than 2 inches during these demonstrations.

END OF SECTION

SECTION 26 05 34 - DUCTBANKS

PART 1 - GENERAL

1.1 DESCRIPTION OF WORK:

A. Provide all underground non-metallic duct lines for certain underground raceways, for extent shown.

PART 2 - PRODUCTS

2.1 DUCT LINES AND ACCESSORIES:

A. Ducts: Rigid polyvinyl chloride conduit; Schedule 40, Type I, conforming to UL Article 651. Beneath building, ducts shall be rigid galvanized steel.

B. Couplings: Slip-on, solvent sealed to pipe; solvent, Western No. 715.

C. Adapters to Underground Conduit: Conduit ends shall be closely fitted without any rough edges of offsets. Maintain existing line and grade.

D. Spacers and Bindings on Multiple Conduit Runs: Plastic, same manufacturer as raceways; embedded in the concrete; 1-1/2" clearance between raceways.

E. Reinforcing Steel: Conform to ASTM 0615.

F. Concrete: 2500 psi concrete to ASTM C94; maximum aggregate size, 1"; purchased from source approved by the Owner's representative.

PART 3 - EXECUTION

3.1 UNDERGROUND DUCT LINES:

A. Depth of Conduit Installed Underground: 3'-0" minimum below finished grade to top of conduit.

B. Grade: Install with uniform gradient between end pulling points; 3" in 100', minimum.

C. Couplings: Provide for slip-on, solvent sealed to pipe: solvent, Western No. 715.

D. Spacing of spacers and binding or multiple duct lines; 10'-0" on centers.

E. Provide rigid galvanized steel conduit at ends and bends, through slab at pad-mount transformer, and for all duct banks installed beneath the building. Connections to underground steel conduit shall be closely fitted without any rough edges of offsets. Maintain line and grade.

F. Reinforcing Steel: Provide bars in duct banks including two No. 4 bars as shown, full length; and transverse ties on 36" centers, formed from No. 3 bars. Ends of bars shall be

lapped 40 diameters and tied with No. 20 gage soft annealed steel wire. Bars shall extend full length of underground raceways.

G. Concrete Encasement: For all duct-lines and connection conduit, encasement thickness 4" minimum, 2500 psi concrete, placement per ASTM C94.

H. Pull Wires: Install 1/32 minimum polypropylene rope, Jet-Line "Poly Rope" or Ideal "Pro-Pull" rope in all ducts and conduits, except where wiring is installed under this contract; approximately 3'-0" of free rope left at each cabinet and pullbox and outlet.

END OF SECTION

SECTION 26 05 36 – CONCRETE MANHOLES

PART 1 - GENERAL

1.1 WORK INCLUDED:

A. Furnish and install all concrete manholes, ladders, and accessories as herein specified and shown on the drawings. Concrete manholes shall be located so that no point on the system is more than 800 feet between pulling points.

B. Submit detailed drawings showing applicable dimensions, imbedded struts, pulling irons, ladders, rings, cover, and drain grate.

PART 2 - PRODUCTS

2.1 ACCEPTABLE MANUFACTURERS:

A. Amcor Precast, Duracrete Inc., or poured in place

B. Requests for substitution of other products will be considered if submitted in accordance with the General Conditions, Division 01, and Section 26 05 00.

2.2 MATERIALS:

A. Concrete manhole vaults shall be constructed of precast or poured in place concrete. Precast materials shall be shipped to the jobsite as a unit assembly unless separate vertical sections are assembled at the jobsite by stacking. Stacked sections shall be sealed with suitable material. Keyway all stacked sections to prevent shifting and movement after installation.

B. Provide manhole interior dimension height as detailed on the drawings.

C. Easily removed knockouts shall be provided to permit conduit entrance. Locate knockouts only where conduits will be installed in this contract. Do not install future knockouts. Knockouts shall be located within a few inches of the corner of the manhole, to allow ease of racking of all cabling exiting the ductbanks.

D. Vault floor shall be pitched for drainage and one or more drain holes shall be provided.

E. Superstrut C300 series mounting channel, or equal of Unistrut, shall be cast into interior walls.

F. Pulling-in irons shall be included inside each manhole as detailed.

G. Cable supports shall be provided for all cables, as detailed, fastened to wall channels. Racks shall be of galvanized steel and shall be of the removable type. The metal portion of racks shall be zinc-coated after fabrication.

H. Manhole ladder of sufficient length for total depth of the manhole plus grade rings shall be provided. Ladders that prove too short shall be replaced. Provide stainless steel

ladders, of heavy duty construction, Suitable for a man and equipment weighting 300 pounds, with 12 inch rung spacing. Rungs shall be treated for slip resistant surface. Ladder shall not bend excessively with 300 pounds in center. Ladders shall have mechanical connection to manhole rings at entry, to prevent ladder from sliding or falling.

I. Embedded metal parts such as channels, pulling-in inserts and cable supports, and bell ends on conduit shall have grounding connection.

J. Frame and cover for manholes shall be standard manhle entries, troffer pattern, non-ventilated, cast iron with 30" clear opening size; cast-in inscriptions "TELECOMMUNICATIONS". Riser sections shall be provided to support manhole frame and cover at grade. Inside diameter of riser sections shall be 42".

K. Provide two ground rods for each manhole; copperweld 3/4" diameter, 10'-0" long driven just inside the finished wall with top 4" above the finished floor. Ground all metal items within the manhole with No. 6 bare stranded soft drawn copper wire.

L. All cables and splices shall be racked to side walls. Supports for cables shall be cable clamps of dry-process glazed porcelain. The clamps shall consist of porcelain half circles mounted on rolled steel sections with a steel clamp and locking screw. The supports shall be Burndy, Unistrut, Superstrut, or Elcen. All channels, attachments and parts shall be hot dip galvanized.

PART 3 - EXECUTION

3.1 INSTALLATION:

A. Seal surfaces between sections on multi-section vaults must be clean and all gaskets must be in place. Excavation hole must not contain water when setting vault. Excavation must provide a minimum of 18 inches clearance around the side walls of each vault for ease of installation and for compaction of backfill.

B. Backfill around all vaults with engineered fill, pea gravel or sand. No voids should remain between the vault walls and native soil. Backfill must be progressively compacted from the bottom to the top surface. Provide 12 inches of compacted gravel, graded level, under each vault for drainage. Provide water penetrable fabric around gravel to separate it from the surrounding compacted soil.

C. Seal all joints between vault sections, lid, risers, covers, etc. with appropriate gasket or sealant. Apply in a manner to insure filling of all voids in the joint being sealed.

D. All cables and splices shall be separated by feeder and shall be fire taped with 3M fire tape per manufacturers instructions.

E. All feeders shall be tagged with metal identification tags indicating the wire size, conductor type, and feeder designation. Example: “350EPR AL - F3”.

F. Spray paint, with lettering template, label the manhole name inside the manhole at the lid location. Spray paint with lettering template, label all entry conduits to indicate where they run. Example: “TO MH 2”. END OF SECTION

SECTION 26 05 37 - CONCRETE TRANSFORMER PADS

PART 1 - GENERAL

1.1 WORK INCLUDED:

A. Furnish and install all concrete transformer pads and accessories as herein specified and shown on the drawings.

B. For precast units, submit detailed drawings showing applicable dimensions, and imbedded struts.

PART 2 - PRODUCTS

2.1 ACCEPTABLE MANUFACTURERS:

A. For precast units: Amcor Precast, Duracrete Inc., Eagle, Oldcastle, or approved equal

B. Requests for substitution of other products will be considered if submitted in accordance the General Conditions, Division 1, and Section 26 05 00.

2.2 MATERIALS:

A. Transformer Pad shall be approved and meet all requirements of the Owner.

B. Concrete transformer pads shall be constructed of precast or poured in place concrete. Precast materials shall be shipped to the jobsite as a unit assembly

C. Provide one ground rod for each pad; copperweld 3/4" diameter, 10'-0" long driven just inside the finished opening with top 4" above the finished floor. Ground all metal items within the transformer with No. 6 bare stranded soft drawn copper wire.

PART 3 - EXECUTION

3.1 INSTALLATION:

A. Location of transformer vault shall be coordinated with the owner prior to excavation and setting regardless of where the drawings indicate to locate it. The owner will be reviewing location as it relates to their required clearances, easements, clearance to flammable gas, and accessibility of trucks. Relocate vault up to 10 feet at no extra cost to the owner.

B. Do not install the transformer pad above existing or new buried utilities.

C. Provide 6 inches of compacted gravel, graded level, under each pad for drainage and to avoid frost heave. Provide geo fabric between gravel and surrounding compacted soil to provide separation, but allow water to penetrate.

END OF SECTION

SECTION 26 05 48 – SEISMIC RESTRAINT FOR ELECTRICAL WORK

PART 1 - GENERAL

1.1 WORK INCLUDED:

A. This section includes seismic restraints and other earthquake damage reduction measures for electrical systems, and electrical components. It complements seismic construction requirements located in other sections of the specification.

B. Provide seismic bracing and support design for all electrical and life safety components for the facility. Provide structural design of all components by a licensed structural engineer in the State of Utah, designed in accordance to the IBC Chapter 16 and the ASCE 7-05 section 13.6, calculation method. Shop drawings and all calculations shall be submitted to the Authority Having Jurisdiction at the State of Utah as a deferred submittal.

C. It should be noted that the design of the seismic bracing depends heavily on the components purchased in the various electrical divisions. Other electrical divisions will need to have approved submittals prior to completing the submittals for this section. Time is of the essence in providing submittals promptly to avoid construction delays.

D. Provide all seismic supports, and associated fittings as herein specified and shown on the associated drawings.

1.3 DEFINITIONS

A. The IBC: International Building Codes

1.3 RELATED WORK SPECIFIED ELSEWHERE:

B. Basic Material & Methods – Section 26 05 00.

C. Raceways – Section 26 05 33.

1.4 QUALITY ASSURANCE:

A. Comply with seismic restraint requirements of the IBC and the ASCE, unless requirements of this section are more stringent.

B. PERFORMANCE CRITERIA

1. Seismic restraint loading criteria

a. Site Class as calculated by the Structural Engineer and/or Geotechnical report: D, E, or F
b. Assigned Seismic Building Occupancy Category as calculated by the Structural Engineer and/or Geotechnical report: I, II, III, or IV
c. Life Safety Component Importance Factor 1.5

d. Other Component Importance Factor (increased for components needed for continued operation of the facility whose failure could impair the continued operation of the facility): 1.25

e. Other component Importance factor (non-critical): 1.0

f. Design Spectral Response acceleration at short periods: Reference USGS site mapping tool for specific latitude and longitude of the site: http://earthquake.usgs.gov/hazards/designmaps/javacalc.php

g. Manufacturers of all submitted equipment shall provide data indicating that their equipment has met a shake table test as per IEEE method or has been calculated to withstand the forces expected at the site of installation. It is required for the manufacturers to submit a certificate or letter indicating the Importance Factor and S_{DS} factor that the equipment is tested or calculated to withstand.

C. Manufacturers shall be engaged in the manufacturing of industry accepted quality supports for conduits and raceways for a period of no less than 5 years for all types and sizes required.

1.5 SUBMITTALS:

A. Deferred Submittals: Provide Seismic Certificate from manufacturer of all electrical equipment indicating that the equipment will withstand the forces, and has been tested using the IEEE method or calculated with the ASCE method using appropriate site acceleration and importance factors for the installed location and occupancy classification expected. Simply labeling it “Seismic Zone 4” under the old Uniform Building Code or “California Seismic approved” is not acceptable and will be rejected. Certificate shall be by an independent testing laboratory or licensed structural engineer.

B. Deferred Submittals: Provide drawings and details showing sizes, types, and assemblies of all seismic bracing and anchoring in sufficient detail to submit to the authority having jurisdiction at the State of Utah. Include stamped and signed calculations from a professional structural engineer licensed in the State of Utah.

C. Product Data: Submit product data that illustrates and indicates type, styles, materials, strength rating, fastening provisions, and finish for each type and size of seismic restraint component used.

1. Anchor bolts and studs: Tabulate types and sizes, complete with report numbers and rated strength in tension and shear as evaluated by an independent agency.

2. Cable and wire rope assemblies: Tabulate types and sizes, complete with report numbers on rated strength in tension and shear as evaluated by an independent agency.

3. Details: Contractor shall provide details of assembly arrangement, including attachment to differing types of structures. Show attachment locations, methods, spacing’s, identifying components and listing their strengths. Indicate direction and value of forces (calculated or tested) transmitted to structure during seismic events.

4. The support seismic – restraint designs must be signed and sealed by a qualified professional structural engineer, licensed in the State of Utah, paid for by the contractor.

B. Coordination Drawings: Show coordination of seismic bracing of electrical components with other systems and equipment in the vicinity, including mechanical ductwork and piping. Show bridging elements to assure that all electrical components anchor to the structure, rather than into ductwork or piping supports.

PART 2 - PRODUCTS

2.1 ACCEPTABLE MANUFACTURERS:

A. Provide products of a quality manufacturer located within the continental North American market. Supports made in Europe, Asia, South America, Africa, or other overseas markets are not acceptable. The following manufacturer's products may be incorporated into the work:

1. Amber/Booth Company, Inc.
2. B-Line Systems, a division of Cooper
3. Erico, Inc.
4. California Dynamics Corporation
5. Hilti, Inc.
6. Loos&Co: Seismic Earthquake Division
7. Mason Industries
8. TOLCO Incorporated; a brand of NIBCO Inc
9. Unistrut; Tyco International, Ltd.
10. GS Metals Corp.
11. Powerstrut
12. Thomas and Betts Corp.

B. Substitutions: Equivalent manufacturers are allowed at contractor's option, no submittals or prior approvals are necessary if supports meet specifications and are detailed in the deferred submittal by the licensed structural engineer.

2.2 COMPONENTS:

A. Rigid Channel Support Systems: Shop or field fabricated assembly made of slotted steel channels with accessories for attachment to braced component at one end and to the building structure on the other end. Provide corrosion resistant coating.

B. Restraint Cables: ASTM A 603 galvanized steel cables with end connections made of thimbles, brackets, swivels, and bolts designed for restraining cable service, and with a minimum of two clamping bolts for cable engagement.

C. Hanging rod Stiffener: Steel tube or steel slotted channel support systems sleeve with internally bolted connections to hanger rod. Do not weld stiffeners to rods.

D. Bushings for Floor Mounted Equipment Anchor: Neoprene bushings designed for rigid equipment mountings, and matched to type and size of anchors and studs.

E. Bushing Assemblies for Wall Mounted Equipment Anchorage: Assemblies of neoprene elements and steel sleeves designed for rigid equipment mountings, and matched to type and size of attachment devices.

F. Resilient Isolation Washers and Bushings: One-piece, oil resistant, water resistant, molded neoprene, with a flat washer face.

2.3 ANCHOR BOLTS:

A. Mechanical Anchor: Drilled in and stud-wedge or female-wedge type in zinc-coated steel for interior applications. Provide Stainless steel for exterior applications. Select anchors with strength required for anchor and as tested in accordance with ASTM E 488. Minimum length shall be eight times the diameter.

B. Adhesive Anchors: Drilled in and capsule anchor system containing polyvinyl or urethane methacrylate-based resin and accelerator, or injection polymer or hybrid mortar adhesive. Verify that Adhesive meets all LEED requirements. Provide anchor bolts in zinc-coated steel for interior applications. Provide stainless steel for exterior applications. Select anchors with strength required for anchor and as tested in accordance with ASTM E 488.

PART 3 - EXECUTION

3.1 INSTALLATION:

A. Install seismic restraints in accordance to applicable codes and regulations as approved by authorities having jurisdiction.

B. Examine structure for reinforcing and avoid structural reinforcing in concrete before drilling. Where depth and location is unknown, employ X-ray and/or radio frequency locating prior to drilling.

3.2 SUPPORT AND SEISMIC BRACING INSTALLATION:

A. panelboard and disconnect racks shall be adequately braced for Seismic Restraint, as required per ASCE 7-05, Section 9.6, latest edition.

B. Pullout resistance shall have a safety factor of 4.

D. Support individual suspended feeder conduits by metal ring or trapeze hangers with threaded steel rods.

3.7 COMMISSIONING AND FINAL INSPECTION:

A. Contractor shall provide a time for access and inspection of seismic support system for the owner, and the commissioning agent. Correct all defects and flaws found prior to ceiling installation and prior to cabling installation.

B. Demonstrate rigid seismic bracing to ensure minimal movement of the raceways on suspended racks in a seismic event. Demonstration shall be by pushing with at least 25 pounds force laterally and longitudinally at selected (mid-span) locations along the length of the suspended raceway rack. Rack shall not move more than 2 inches during these demonstrations.

END OF SECTION

SECTION 26 24 16 - PANELBOARDS

PART 1 - GENERAL

1.1 WORK INCLUDED:

A. Provide all branch circuit panelboards as herein specified and shown on the drawings.

1.2 SUBMITTALS:

A. Submit complete and descriptive shop drawings indicating dimensions and compliance with the specifications herein. Submit in accordance with the General Conditions, Division 01, and Section 26 05 00.

PART 2 - PRODUCTS

2.1 ACCEPTABLE MANUFACTURERS:

A. Square D, Siemens, General Electric, Cutler-Hammer/Westinghouse

B. Requests for substitution of other products will be considered if submitted in accordance with the General Conditions, Division 01, and Section 26 05 00.

2.2 EQUIPMENT:

A. Panels shall be factory pre-assembled using bolt-on circuit breakers, equivalent to Square D NQOD series. Separate feeder lugs shall be provided for each feeder conductor.

B. Breakers in branch panelboards shall be not less than 3/4 inch on centers. Each breaker shall be securely fastened to prevent movement and trims shall fit neatly and tightly to the breaker assembly. Two and three pole breakers shall be single breaker assembly rather than two or three single pole breakers with the handles tied together externally.

C. Panel finish shall be a flat, light gray finish suitable for painting over or being left with factory finish. Flush mounted panels in finished walls shall be painted to match wall, paint and paint preparation to be as specified by Architect. Panel covers to be painted off wall, then installed over painted wall surface. Trims to be separately packed and protected from scratching and marring. Refer to labeling requirements in 26 05 00 Basic Materials and Methods.

D. Panel covers to be “Door in Door” or “Hinged Trim Front” style to permit authorized personnel to open the outer door and have access to the entire interior of the can. The inner door shall access only the breaker handles. Provide flush stainless steel cylinder lock with catch and coil spring loaded door pull. All panels shall be keyed alike, but inner and outer doors shall not be keyed alike.

E. Where grounding conductors are shown or specified, provide each panel and distribution center with grounding bus to which the grounding conductors shall be connected, each having its own terminal or lug.

F. Panelboards rated 400 amps or less shall not exceed 6" depth.

G. Provide Fully or Series rated equipment greater than or equal to the interrupting capacities indicated on the drawings.

H. Provide all copper bus bars, 100% rated neutral bus, ground bus and isolated ground bus where indicated. Lugs shall be rated for copper only, CU-AL rated lugs shall not be allowed.

I. Provide breaker tie handles in 2 pole and 3 pole configurations for all grouped multiwire branch circuits to allow grouped disconnecting means. Verify quantity with contractor.

PART 3 - EXECUTION

3.1 INSTALLATION:

A. Breaker handle guards shall be provided on each circuit supplying obviously constant loads to prevent accidental shutting off. Such loads are refrigeration, contactor controlled circuits, freeze protection, etc.

B. Furnish and install three spare one inch conduits from the top of each recessed panel, to an accessible point above the ceiling.

C. Care shall be taken to terminate ground conductors from isolated ground receptacles only on the isolated ground bus in a panel. Do not terminate bonding conductors on an isolated ground bus.

D. Each multiwire branch circuit shall be provided with breaker tie handles such that all ungrounded conductors will be simultaneously disconnected as per NEC 210.4 (B). Provide 2 pole and 3 pole breaker tie handles in sufficient quantity for all grouped circuits.

E. Group the ungrounded and grounded conductors for multiwire branch circuits in at least one location inside the panelboard with wire ties or similar means per NEC 210.4 (D).

3.2 LABELING:

A. No brand labels or other marking shall be on the outside of the panels. Where changes are made in existing panels, distribution boards, etc., provide new labeling and schedules to accurately reflect the changes; hand written revisions will not be acceptable.

B. Provide engraved nameplate for all panelboards permanently mounted inside door for flush panels and on the outside face of the door for surface panels; include the following minimum information:

1. Text stating “Main Disconnect” (if applicable)

2. Panelboard name

3. Source feeding panel

4. Voltage, Size (amps), number of phases, number of wires, and AIC rating

C. Engraved nameplates shall be have a black back ply, an inner white ply with outer colored ply as follows: Black for normal power, Red for Emergency (Legally Required or Optional Standby) power, Orange for UPS power.

D. Provide typewritten branch panel schedules with protective clear, transparent covers accounting for every breaker installed. Use actual room designations assigned by name or number near completion of the work, and not the designations shown on drawings.

E. Provide a permanent engraved label or include with the panel schedule information indicating the conductor insulation color for: (1) all ungrounded conductors (2) grounded conductor (3) equipment grounding conductor. This shall be documented at each panelboard in a readily visible location; refer to Wires and Cables Section 26 05 19 for conductor color coding.

END OF SECTION

SECTION 26 27 26 – SWITCHES & RECEPTACLES

PART 1 - GENERAL

1.1 WORK INCLUDED:

A. Provide all switches, receptacles, and other devices as herein specified and shown on the associated drawings.

PART 2 - PRODUCTS

2.1 ACCEPTABLE MANUFACTURERS:

A. Bryant, Arrow-Hart, Eagle, LaGrande, General Electric, Leviton, Hubbell are acceptable.

2.2 MATERIALS:

A. The following list of wiring devices covers the most commonly specified items and establishes the grade of device. Should the Drawings indicate a device other than those listed herein without reference to catalog number, such device shall be of the same grade and manufacturer as like devices.

Single Pole Switches	Hubbell #1221
Duplex Receptacles - 20 amp	Hubbell #5362

All wiring devices and plates to be specification grade. Receptacles shall be mounted vertically with the ground pin down unless otherwise noted.

B. Color of devices and plates to be selected by owner. Provide 302 stainless steel plates.

C. Wet location and/or weatherproof receptacles shall be in a weatherproof enclosure, the integrity of which is not affected when the receptacle is in use (attachment plug cap inserted), UL labeled and listed “Suitable For Wet Locations While In Use”. Provide enclosure with stainless steel screws, gasket between enclosure and mounting surface and between cover and base, clear impact resistant UV stabilized polycarbonate as manufactured by TayMac Corporation or accepted equivalent.

PART 3 - EXECUTION

3.1 GENERAL:

A. Provide a separate GFI type receptacle for each receptacle noted on plans as GFI. Standard receptacles fed from an up-steam GFI type receptacle are not acceptable.

B. Install outlets and switches in a neat manner.

C. Faceplates, devices, and boxes shall be square.

D. Devices to be installed flush with faceplate.

3.2 LABELING:

A. Provide self-adhesive labels for all switches and receptacles in compliance with Part 3.3 of Section 26 05 00.

END OF SECTION

SECTION 26 43 00 – SURGE PROTECTIVE DEVICES

PART 1 - GENERAL

1.1 WORK INCLUDED:

A. Furnish all labor, materials, equipment and services necessary for and incidental to the installation of the surge protective device (referred to as SPD herein and/or TVSS on the drawings) components at locations shown on the plans.

1.2 QUALITY ASSURANCE:

A. The SPD shall be UL Listed as a surge protective device, category C, UL 1449 Third Edition. All UL 1449 test data shall be provided with submittal.

B. The SPD shall bear suppressed voltage rating issued by UL, and the units shall be tested in accordance with ANSI/IEEE C62.41-2002, Category C, 20kV/10kA, 8x20 uS and 1.2x50 uS Combination Waveform and .5uS - 100kHz Ring Wave with a minimum of 10 sequential impulses delivered directly into the SPD at a maximum of sixty second intervals for each waveform.

C. Manufacturers Qualifications: Only firms regularly engaged in the manufacture of SPD products for category C (ANSI/IEEE C62.41), and whose products have been providing satisfactory service for not less than five years, shall be considered. Manufacturer qualifications shall be provided as part of the submittal.

D. The SPD must be capable of surviving 1000 sequential surges without failure, using IEEE test procedures established in C62.45.

E. The SPD device must have MOV surge devices, installed with full rating indicated between Phase to Neutral, Phase to Ground, and Neutral to Ground, and be capable of handling a minimum surge current as follows:

Panel/Switchboard Size Equal to or greater than (A):	3000	2000	1200	800	225	100
Mode:	kA/Mode					
Line to Neutral	250	200	150	100	80	50
Line to Ground	250	200	150	100	80	50
Neutral to Ground	250	200	150	100	80	50

1.3 SUBMITTALS:

A. Submit complete and descriptive shop drawings in accordance with the General Conditions, Division 1, and Section 26 05 00.

B. Submit all related SPD Specifications and drawing information requested in this document and U.L. 1449 Third Edition surge suppression ratings for the SPD. In order for a SPD system to be considered, all responses to information requested in this specification must be provided in writing. If a manufacturer cannot comply with any portion of this specification, this must be stated in the reply and the reason for non-compliance shall be provided.

C. Submit operation and maintenance data in accordance with the General Conditions, Division 1, and Section 26 05 00.

PART 2 - PRODUCTS

2.1 ACCEPTABLE MANUFACTURERS:

A. Provide products of one of the following manufacturers:

1. Liebert
2. LEA International
3. Current Technologies
4. Square D
5. Cutler Hammer
6. Siemens
7. GE

B. Requests for substitution of other products meeting all specification requirements herein will be considered if submitted in accordance with the General Conditions, Division 1 and section 26 05 00.

2.2 SPD EQUIPMENT:

A. The SPD shall be suitable for application in category C environments as described in ANSI/IEEE C62.41. The SPD shall be of parallel design and provide protection from Line to Ground, Line to Line, Line to Neutral, and Neutral to Ground.

B. The SPD shall be compatible with the electrical system voltage, current, configuration and intended application.

C. The SPD maximum continuous operation voltage (MCOV) shall be capable of sustaining 100% of the nominal RMS voltage continuously without degradation.

D. The SPD shall only use solid state clamping components connected in parallel with the supply to limit the surge voltages. Clamping components shall be installed in 7 modes. Four mode SPD devices are not acceptable.

E. For Monitoring of SPD's Provide:

1. Visual and audible indication with disable switch for properly performing protection.

2. Provide a surge counter.

F. House in the appropriate NEMA rated enclosure, SPD may be integrated into panelboards, or can be seperate.

G. SPD shall be repetitive in nature such that failure of a single component within the SPD (i.e. MOV, fuse, etc) does not leave the electrical system unprotected.

H. All SPD's installed in front of the main service disconnect(s) as indicated on the drawings shall be provided with an integral disconnect and the SPD shall be located next to the main service disconnect(s).

PART 3 - EXECUTION

3.1 INSTALLATION:

A. Ship with complete installation instructions, which are to be followed in detail. The manufacturer's representative is to be contacted and is to supervise the installation.

B. Installation shall comply with all applicable State and National Electrical Codes, including NEC Articles 240, 250, 310 and 285. Utilize the panelboard/switchboard circuit breaker to provide overcurrent protection and a means to disconnect power from unit. Fuses shall not be utilized for the SPD overcurrent protection unless specifically indicated on the drawings and if utilized shall be of the Time Delay type rated for the available fault current at the location of installation.

C. Phase, neutral and ground leads of installed SPD must be grouped and twisted together up to the point of connection at the bus or overcurrent device. Lead lengths must be as short as possible, avoiding bends where possible. Lead lengths greater than sixteen inches or sharp bends in leads shall not be permitted, where lead lengths greater than sixteen inches cannot be avoided high performance low impedance cable equivalent to Current Technology "High Performance Interconnect (HPI) SPD connection system" shall be used while maintaining the shortest lead lengths possible, wire size shall be as indicated on the drawings. Lead length is measured from switchboard bus or breaker to point of connection to SPD device.

D. Conductors must terminate with compression type lugs.

E. Mount so that suppressor indicator lights will be clearly visible after installation.

F. Circuit breaker shall be exclusively utilized for the SPD device.

G. Raceway from SPD to switchboard shall consist of rigid steel conduit with double locknuts and grounding bushings connected to switchboard ground.

H. Overcurrent protection sizing shall be as per manufacturer's instructions. Conductor sizing shall be based on NEC requirements.

3.2 LABELING:

A. Where changes are made in existing SPD's (TVSS's) provide new labeling to accurately reflect the changes; hand written revisions will not be acceptable.

B. Provide engraved nameplate for all SPD's permanently mounted on the outside face of the SPD; include the following minimum information:

1. TVSS name

2. KA/mode ratings for line to neutral, line to ground, and ground to neutral

3.3 WARRANTY:

A. Warranty shall be for full replacement without pro-rating value, for a minimum period of 10 years.

END OF SECTION

SECTION 26 51 00 - LIGHTING

PART 1 - GENERAL

1.1 WORK INCLUDED:

A. Provide final lighting design and illumination calculations as detailed for owner approval. Additional poles and fixtures to meet the minimum illumination standard required shall be provided at no extra cost..

B. Provide light fixtures with lamps and accessories as herein specified and shown on the drawings. Exact fixture manufacturer may be selected by the design-build engineer and contractor, but fixture quality and parts must be approved by the Owner.

1.2 QUALITY ASSURANCE:

A. If the catalog number of a specified fixture should conflict with the fixture description or the general lighting specifications, such conflicts shall be brought to the attention of the Owner prior to bidding.

B. The dimensions shown on the luminaire schedule are for general reference only. Refer to the manufacturer's shop drawings for exact dimensions prior to rough in.

1.3 SUBMITTALS:

A. Submit product data and shop drawings for fixtures, ballasts, and lamps in accordance with the General Conditions, Division 1, and Section 26 05 00.

B. Verify that fixture description matches that which is indicated by the specified catalog number.

C. All features mentioned in the fixture list shall be marked on the submitted items.

D. Submit written confirmation that dimming ballasts and dimming controls are compatible.

E. Submit Operation and Maintenance data in accordance with the General Conditions, Division 1, and Section 26 05 00.

PART 2 - PRODUCTS

2.1 ACCEPTABLE MANUFACTURERS:

A. Fixtures and poles from a quality manufacturer with minimum 3 years experience. To match similar fixtures throughout the Camp Williams.

B. Requests for substitution of other products will be considered if submitted in accordance with the General Conditions, Division 1, and Section 26 05 00.

C. Substitution requests for fixtures equal to those specified shall include complete construction and photometric data including, if applicable, candlepower distribution curve, spacing to mounting height ratio, table of coefficients of utilization, isofootcandle curve, ANSI beam spread classification, efficiency, etc.

D. Submittals and substitution requests for fluorescent fixtures shall include the metal gauge of the housing and the lens thickness, material, and pattern.

2.2 MATERIALS:

A. Provide luminaires with Area Coverage, damp, or wet label if required for the application indicated.

2.3 BALLASTS:

A. All ballasts shall be capable of providing reliable operation of the lamps at the lowest temperature normally encountered. The contractor shall confirm that the ballasts are appropriate for the ambient conditions.

B. The contractor shall verify the ballast voltage prior to submittal.

C. Ballasts deemed excessively noisy shall be replaced without cost to the Owner.

D. Instant start ballasts shall not be used on circuits that contain occupancy sensors or daylighting sensors. All ballasts specified for these types of circuits shall be program start.

H. DRIVER LED: Provide integral driver:

UL listed and CSA certified.
Comply with IESNA LM-79 and LM-80 standards.
Recognized Testing Laboratory listed, thermally protected, resetting, Class P,
For use in insulated ceilings.
Power factor equal to or greater than 90%.
Meet all current Federal, State and Power Co. efficiency and efficacy standards, and rebate program requirements.
Meet all current ANSI, IEEE, and FCC regulations for EMI/RFI, harmonic distortion, and transient protection.

I. HID ballasts shall be as follows:

1. High Pressure Sodium (HPS):

a. High power factor, normal ambient, 180 degrees C insulation class, with capacitor and ignitor.

b. Auto transformer type for 50 watt lamps.

c. Constant wattage auto transformer type for lamps 70 watt and above.

2. Metal Halide (MH):

a. High power factor, normal ambient, 180 degrees C insulation class.

b. Auto transformer with capacitor and ignitor for lamps 150 watt or less.

c. Constant wattage autotransformer with capacitor for lamps above 150 watts.

3. Pulse Start Metal Halide (PSMH):

a. Where available as standard products, provide pulse start metal halide ballasts for maximum energy savings.

2.4 LAMPS:

A. Metal Halide high intensity discharge lamps shall be either coated or clear as recommended by the fixture manufacturer. Provide pulse start lamps for Metal Halide fixtures requiring pulse start. Provide minimum CRI of 65.

B. For Metal Halide lamps, provide Base Up, or Horizontal rated lamps for maximum lumen output. Universal Burn lamps are not acceptable.

C. High Pressure Sodium high intensity discharge lamps shall be low mercury TCLP compliant where available as standard products, and have an average rated life of 24,000 hours.

D. Avoid use of all incandescent and fluorescent lamps in the exterior environment.

E. Acceptable lamp manufacturers are Venture, Osram/Sylvania, Philips, and General Electric.

F. All lamps and fixtures shall be in proper operation at the time of acceptance.

G. SPARE LAMPS: Provide ten percent spare lamps, with a minimum of two, for each size and type used.

2.5 POLES:

A. Each pole shall have adequate strength and rigidity to withstand not less than 100 mph winds without damage to the poles and attached fixtures and lamps. Pole bases shall be equipped with hand holes with matching covers, and base cover.

B. Provide concrete light pole bases. Provide 3000 psi class concrete, forming, and reinforcing as required. Provide smooth uniform finish on all concrete above grade. See Division 3, Concrete Installation. Note that soil in many areas is collapsible, bases shall extend to depth appropriate for dealing with collapsible soil.

C. Anchor bolts shall be hot-dip galvanized after fabrication and threads cleared. Nuts, washers, and other hardware and fittings shall be corrosion resistant alloy material of adequate strength. Indicated pole heights are above the top of the concrete base.

D. After the poles have been installed, shimmed and plumbed, grout the spaces between the pole bases and the concrete base with non-shrink concrete grout material.

E. Provide ground rod for poles installed on grade, attached to pole.

E. Provide fuse clips located in handhole for each fixture head circuit.

PART 3 - EXECUTION

3.1 INSTALLATION:

A. Luminaires installed under this work shall be properly and adequately supported Fixture support systems shall provide a safety factor of four. This shall apply to anchors, bolts, and all other hardware and appurtenances associated with the support system.

B. Fixture supports shall provide proper alignment and leveling of fixtures, and shall be arranged to maintain the alignment at all times. The final decision as to adequacy of alignment shall be given by the Owner.

C. All light outlets shall be supplied with a fixture. Outlet symbols on the drawings without a type designation shall have a fixture the same as those used in similar or like locations.

D. Fixtures shall be left clean at the time of acceptance of the work and every lamp shall be in operation. The responsibility for cleaning or protecting fixtures from dirt, dust, paint, debris, etc. shall rest with the Contractor performing this division of work.

E. Prior to the purchase of any luminaire, the finish shall be verified with the Owner and the voltage shall be verified based on the panelboard voltage.

F. Final illumination levels and photometric analysis is required before installation. Owner will review and approve the photometrics. Minimum footcandles is 0.2 FC maintained on the pavement.

3.3 WARRANTY:

A. Provide a 5 year complete parts and replacement labor by manufacturer for all drivers and ballasts.

END OF SECTION

This Appendix contains design graphical guidelines.

Civil Engineering Design Narrative.

TABLE OF CONTENTS

INTRODUCTION

The Utah National Guard has a major training and operational facility located at Camp Williams, Utah approximately 25 miles south of downtown Salt Lake City, Utah. It is further located on the Salt Lake County – Utah County boundary about midway between Salt Lake City and Provo Utah. Access is by way of Redwood Road from either the north or the south. See attached Figure 1 – " Boundary Map". Camp Williams was established many decades ago and continues to expand with the needs of the Utah National Guard. The current military base sits on a plateau overlooking the Jordan River Valley. A Master Plan[1] has been prepared showing an expansion of the site. The current site is labeled the Upper Garrison site and the future expansion area, known as the Lower Garrison site, is located south and east of the current site and substantially below the existing plateau.

Multiple phases of improvements are anticipated for the site expansion. Phase One will include roadway and utility improvements to the existing Upper Garrison site. Phase Two anticipates roadways and utility improvements to the Lower Garrison site to the south and east.

POLITICAL BOUNDARIES AND JURISDICTIONAL ISSUES

The project location is situated at the confluence of a number of political and jurisdictional entities. The northern third of the existing Upper Garrison area of Camp Williams is currently in Salt Lake County and all of the Upper Garrison area is within the limits of Bluffdale City. See "Figure 1 – Boundary Map" which shows the current Bluffdale City boundary. It was recently annexed to the City in a 2011 action taken by the City. The adjacent National Security Agency site, west of Redwood Road was likewise annexed into the City at the same time. Bluffdale City operates its own culinary water system, however their sanitary sewer system is provided by the South Valley Sewer District located in Draper, Utah.

The southern 2/3 of the Upper Garrison area is located in Utah County along with all of the Lower Garrison area of Camp Williams, as proposed in the Master Plan, lies within the City limits of Lehi City. Lehi City operates their own water, sanitary sewer and power systems. There appear to be no unincorporated areas of Utah County within the Camp Williams Master Plan area. In addition, the Town of Saratoga Springs is located not much further south of the Lower Garrison site especially along Redwood Road.

ROADWAY SYSTEM DESCRIPTIONS

The Master Plan anticipates that the 1st Avenue roadway would be extended from the existing Upper Garrison area down the southern edge of the plateau in an "L" shaped road to the Lower Garrison area. Phase One of this project will build the Upper Garrison portion of 1st Avenue between Utah Street on the North, down past Oregon Avenue, along the East perimeter fence to the south end of the Upper Garrison area. In addition, portions of 2nd Avenue and Oregon Avenue will be improved or constructed.

Phase Two of this project would complete the southern and eastern extensions of 1st Avenue into the Lower Garrison area. In addition, Phase Two would construct a new North South road called Lower Garrison Avenue between 2600 North in Lehi and the North end of the Camp Williams property near the Jordan River. Some additional roadways are anticipated to access specific building site locations in the Lower Garrison area. Frontage improvements along the north side of 2600 North should also be considered at an appropriate time.

UTILITY SYSTEM DESCRIPTIONS

The Master Plan anticipates that the 1st Avenue roadway would be extended from the existing Upper Garrison area down the south edge of the plateau in an "L" shaped road to the Lower Garrison area and that utilities would be established in this road corridor to extend to the Lower Area as well, with some minor exceptions. In addition, utilities will extend the full length of the new Lower Garrison Avenue between 2600 North and the northern end of the site. All utilities would be connected between the Upper and Lower Garrison areas except sanitary sewer.

A - Culinary Water System

The existing Upper Garrison area is provided culinary water from the Camp Williams water system. It is supplied water from two ground water wells and some springs located near the north end of the existing Camp Williams site. Two existing water storage reservoirs with a total of 1.3 million gallons are located in the foothills west of Redwood Road and maintain adequate storage for the Master Planned area. According to the Camp Williams Maintenance Manager[3], Mr. Dennis Borg, the water system is supplying around 550 gallons per minute with a daily use sometimes exceeding one million gallons. He also indicates that there are sufficient water rights for future expansion of the system. The largest waterline on the site is a 14 inch waterline that transmits water from the storage reservoirs to the base. In addition, there are numerous waterlines of various sizes down to 2 inch, some of which have been there a very long time. The Master Plan anticipates that the existing water lines would be extended and looped to the Lower Garrison area. It is not anticipated that a connection will be made with any of the public water systems.

B - Irrigation Water System

There are two privately owned irrigation canals that run from North to South through the Lower Garrison area of Camp Williams. It is anticipated that both of these canals will be piped through the site as part of the Utility Improvements Project under consideration. The higher one runs from North to South generally along the Bluffdale City boundary which is near the eastern perimeter fence of the Upper Garrison area. This is the Jacobs-Welby Irrigation Canal. The lower one runs generally along the Lower Garrison Avenue location. This is the Utah Lake Irrigation Company Canal. Both are privately owned and operated.

C - Sanitary Sewer System

The existing Upper Garrison area has a contract to collect their own sanitary sewer and gravity feed it to one single connection to the South Valley Sewer District at a point across the ravine and directly North of Camp Williams. The proposed Lower Garrison area is at a much lower elevation and could not deliver their sanitary sewer to this same location without installing a sewerage lift station to pump their sewerage. The sanitary sewer for the Lower Garrison site will be provided by extension of existing Lehi City sanitary sewer lines to the 2600 North area and then onto the site near the proposed South Gate site. The nearest Lehi sanitary sewer system line is currently under contract to be extended to a point just west of the Jordan River on 1500 North Street. From there the sanitary sewer line is under

negotiation to be extended westward to 3600 West, then northward along 3600 West to 2600 North, then westward to a point near the proposed South Gate on Lower Garrison Avenue.

D - Storm Drainage System

The natural drainage of the Lower Garrison area is from west to east across the site and onward to the Jordan River, which is adjacent to or not far distant from the eastern site boundary. The Jordan River flows northward. This area is under the jurisdiction of Lehi City, but also the Army Corps of Engineers and Utah County. It is anticipated that two on site storm drainage detention ponds will be required as part of the site Master Plan. Water quality and quantity will be regulated and permitted before it would be allowed to enter the Jordan River. Other on site detention ponds may be necessary in the final design phase to minimize storm drainage piping sizes and provide localized storage areas.

E - Natural Gas Service System

Natural gas service in the area is provided by Questar. For many years the main natural gas feed into the Upper Garrison area has been from a location near the Jordan River in the northeastern corner of the Upper Garrison site. During recent railroad construction for the Utah Transit Authority's Front Runner Program, a new natural gas feed line was built from an area in Saratoga Springs along Redwood Road south of the Upper Garrison site. This new natural gas line connects to Redwood Road near the very southwest corner of the Upper Garrison Camp Williams site and then continues northeasterly along the Bluffdale boundary parallel to the Jacobs-Welby Irrigation canal along the eastern perimeter of the Upper Garrison area to the original location of the natural gas feed near the northeastern corner of the Upper Garrison site.

In Phase Two construction, it is anticipated that a connection to this existing line will be made where the new 1st Avenue roadway crosses it several hundred feet south of the existing Upper Garrison area near the Jacobs-Welby Irrigation Canal. A new natural gas line will run in the 1st Avenue roadway corridor eastward to and then along the Lower Garrison Avenue between 2600 North and the northern boundary of the Lower Garrison area.

F - Electrical Power Service System

Electrical power service in the area is provided by Rocky Mountain Power. Electrical power supply lines serving the Camp Williams site have recently been upgraded to provide additional capacity for expansion. Electrical power service to the existing Upper Garrison area of Camp Williams is distributed from Building 1210 – the Existing Power Building located near the northwestern corner of the Upper Garrison area of Camp Williams. The Master Plan anticipates that a new electrical power line will be extended from Building 1210 southward along Redwood Road and the western boundary of Camp Williams to a point near the southwest corner where it will intersect the 1st Avenue road extension and travel within the new roadway corridor eastward to the new Lower Garrison Avenue. It will then extend the full length of the new Lower Garrison Avenue to service facilities in the Lower Garrison area. Electrical power for proposed street lights in the area would also be provided. See Street Lighting Section below.

There are currently some minor extensions of the electrical power system under construction in the area of 1st Avenue and Oregon Avenue. The full extent of these recent changes should be incorporated into final design plans for Phase One of the Upper Garrison area.

G - Data and Telecom System

Data and telecom service exists on the Upper Garrison area of Camp Williams. In Phase One, it is anticipated that data and telecommunication lines will need to be extended from an existing manhole at Utah Avenue and 2nd Avenue southward to Building 9000 along 2nd Avenue.

In Phase Two data and telecommunications lines will be extended from Building 9000, the large building located near the beginning of the extension of 1st Avenue, and run along the new 1st Avenue roadway extension down to and along the Lower Garrison Avenue roadway. In addition, there appears to be an existing fiber optic line that runs along the south side of 2600 North in Lehi City.

H – Street Lighting System

Street lights exist extensively throughout the Upper Garrison area. There are a variety of pole and fixture types including shoebox fixtures with downlighting heads as well as cobra head fixtures. All new roads and parking areas in the Upper Garrison area should be equipped with new street lighting poles and fixtures to match those nearby as closely as possible. In particular, new street lights should be installed along the extension of 2nd Avenue between Utah Avenue and Oregon Avenue, along the north side of Oregon Avenue between 2nd Avenue and 1st Avenue and along the extension of 1st Avenue between Utah Avenue and the south end of the Upper Garrison area especially along the perimeter fence.

In Phase Two, street lighting should be provided along all new roadways including the extension of 1st Avenue and Lower Garrison Avenue.

In the Lower Garrison area, street lighting may be required by Lehi City along the north side of 2600 North street. Coordination with the City and their standards would be desirable. Lehi City has their own power company and supplies power to street lights on City streets.

ROADWAY AND UTILITY DESIGN GUIDELINES

ROADWAY DESIGN GUIDELINES

Roadways will be constructed as shown in Master Plan. Roadway widths shall comply with the Army National Guard code DG 415-5[5]. Roadway widths shall have capacity for moderate traffic and heavy loads. Due to the size of vehicles and traffic the typical roadway will be a minimum of 30 feet wide.

Over excavation of 2 feet will typically be required by the geotechnical report dated June 29, 2007 done by GSH Geotechnical Consultants, Inc.[2] Structural backfill and testing shall follow recommendations within the report. An 8” layer of roadbase shall be placed on top of the structural backfill followed by a minimum 4” asphalt layer. Sheet DT-1 shows a typical roadway cross section.

Curb and Gutter is required for all primary roadways. Roadway centerlines and curb and gutter should be designed to have a minimum slope of 0.50 % to provide positive drainage. Cross slopes on new roadways should be a minimum of 2.00%.

UTILITY DESIGN GUIDELINES

General design guidelines for the proposed utility extensions are shown in the paragraphs that follow. Utilities will generally be placed within the new road extensions of 1st Avenue and the Lower Garrison Avenue. A cross section of the roadways and utility configuration is shown in the Master Plan document.

A – Culinary Water System

Culinary water lines will be extended along new roadways as shown in the Master Plan. All culinary water lines will be constructed of ASTM C-900 PVC waterline pipe. Minimum waterline pipe size will be 12". Fire hydrants will be placed every 500 feet and at all dead end lines. Gate valves will be placed at road intersections to allow easy system operation. Any valves 10 inch and larger in size shall be butterfly valves. Concrete collars will be installed around the valve at the road surface to maintain easy identification of the valve locations. Waterlines shall be buried a minimum of 40 inches deep to provide frost protection. Culinary water and sanitary sewer lines shall not be placed closer than 10 feet horizontally from each other. Whenever a sanitary sewer line is crossed, the waterline shall be above the sewer line with a minimum of 18 inch clearance.

It is anticipated that new culinary water lines installed in 2nd Avenue as well as the extension of 1st Avenue in Phase One will be 12 inch diameter. In addition, the main water line in Phase Two to be extended along with 1st Avenue and the Lower Garrison Avenue will also be 12 in diameter. The water lines shall be installed limiting high points and low points. Air vac stations may be required to vent off air form high points of lines. Pressure reducing stations may be necessary in all connections between the Upper and Lower Garrison areas.

All backfill material shall be placed with particles not exceeding two inches in size. A mixture of sands and gravels containing at least 20% fines shall be placed as pipe bedding and on top of the pipe a minimum of 12 inches. The remaining trench depth shall be filled with Type A-1 or Type A-1a soils with limited fines. Backfill shall be done in maximum of 8" lifts in loose thickness. Compaction shall be done to meet 95%.

B – Irrigation Water System

There are two well established privately owned irrigation canals that traverse the Lower Garrison area. It is anticipated that each will be piped and placed underground through the site. Grades are critical to the flow of these canals. There is minimal slope associated with the canals which make relocation or piping difficult. However, when considered early in the design process, accommodations can be made for successfully moving the canals underground. The designer should contact directly the private irrigation company to be aware of their design constraints as well as the timing of any construction to coincide with critical summer water demands.

C – Sanitary Sewer System

Sanitary sewer lines shall be extended along new roadways as shown in the Master Plan. All sanitary sewer lines shall be constructed of ASTM C14 Concrete or ASTM D3034, SDR 35 PVC plastic sewer pipe. Minimum sanitary sewer line pipe size shall be 8 inch for main lines. Concrete 48 inch diameter manholes shall be installed along the main line at intervals not to exceed 400 feet. Manholes shall also be installed at all intersections where three or more lines meet or where there is a change in direction with two lines connecting. Concrete grade rings shall be used to bring the cast iron ring and cover to match the finish asphalt road grade. In the Upper Garrison area the manhole covers may be stamped to

show South Valley Sewer District. In the Lower Garrison area the manhole covers may be stamped to show Lehi City Sewer.

D – Storm Drainage System

In the Upper Garrison area, new storm drainage piping will be installed along with new curb and gutter along the north side of Oregon Avenue between 2nd and 1st Avenue. This pipe and drainage can then discharge into the north side of the existing storm drainage detention basin located northeast of Building 9000. In addition, some storm drainage piping may be required in the extension of 1st Avenue between Oregon Avenue and the south end of the Upper Garrison area. Storm drainage pipe should be minimum 18 inch diameter concrete pipe. There should be a minimum of 12 inches of cover over piping in traveled areas.

In the Lower Garrison area, storm drainage piping should be installed along the new Lower Garrison roadway to provide positive drainage from the street system. Pipework will be extended to two storm drainage detention basins located as shown on the Master Plan. In addition, smaller local detention basin areas may be incorporated into individual building sites throughout the Lower Garrison area. Pipes should be designed to contain a 10 year, 1 hour storm based upon Lehi City Rainfall Intensity Duration Curves. Detention basins should be designed to hold a 100 year storm water event.

E – Natural Gas Service System

Natural gas service to the area is provided by Questar Gas Co. Extensive gas piping exists in the Upper Garrison area. Phase One Construction already has natural gas service lines established, however a final review should take place to see if natural gas line extensions should be placed in 2nd Avenue prior to final design. It is anticipated that additional natural gas lines will need to be installed in the new 1st Avenue construction from an area near the new Chapel site to Building 9000.

In Phase Two construction, a new natural gas main line needs to be connected where the new 1st Avenue roadway crosses the incoming natural gas line from Redwood Road several hundred feet south of the existing Upper Garrison area near the Jacobs-Welby Irrigation Canal. A new natural gas line will run in the 1st Avenue roadway corridor eastward to and then along the Lower Garrison Avenue between 2600 North and the northern boundary of the Lower Garrison area. Natural gas lines should be run in the appropriate alignment in new roadways to comply with the Master Plan road cross section. Sizing will depend upon pressure, length of run and anticipated demand in the new Phase Two Lower Garrison area.

F – Electrical Power Service System

Phase One of the Master Plan anticipates that a new electrical power line will be extended from Building 1210 southward along Redwood Road and the western boundary of Camp Williams to a point near the southwest corner where it will intersect the 1st Avenue road extension. In addition, electrical power lines will be extended along 2nd Avenue from a manhole near Utah Avenue and 2nd Avenue southward to Building 9000. There are currently some minor extensions of the electrical power system under construction in the area of 1st Avenue and Oregon Avenue. The full extent of these recent changes should be incorporated into final design plans for Phase One of the Upper Garrison area.

In Phase Two, new power lines will be placed within the new 1st Avenue roadway extension corridor eastward to the new Lower Garrison Avenue. It will then extend the full length of the new Lower Garrison Avenue to service facilities in the Lower Garrison area. Electrical power for proposed street lights in the area would also be provided. See Street Lighting Section below.

G – Data and Telecom System

In Phase One construction, it is anticipated that new data and telecommunication lines will need to be run in the new 2nd Avenue roadway between Utah Avenue and Building 9000. Manholes or vaults will incorporate cast iron access lids with appropriate stamps indicating telecommunications equipment.

In Phase Two construction, data and telecommunications lines will be extended from Building 9000, the large building located near the beginning of the extension of 1st Avenue, and run along the new 1st Avenue roadway extension down to and along the Lower Garrison Avenue roadway.

H – Street Lighting System

New street lights are anticipated to be installed along new roadway construction in Phase One as described above. New street lights will be metal poles with shoebox fixtures that closely match adjacent or nearby streets lights. A reinforced concrete base will be provided with mounting bolts for the poles. Access will be provided to the pole wiring and photoelectric controls as close as possible to the concrete base.

In Phase Two construction, a uniform style of poles and street lighting fixtures should be determined that can be placed along the new roadways including the 1st Avenue extension and the new Lower Garrison Avenue.

Any street lighting along 2600 North should be coordinated with Lehi City and meet their standards.

CONCLUSIONS

This report anticipates the construction of additional roadway and utility facilities at Camp Williams. These improvements will take place in at least two phases. Phase One will build roadways and utilities in the Upper Garrison area while Phase Two will extend roadways and utilities into and throughout the Lower Garrison area.

Specifically, Phase One will extend 2nd Avenue southward to Oregon Avenue, will improve the north side of Oregon Avenue from 2nd Avenue to 1st Avenue and will redefine and extend 1st Avenue from Utah Avenue on the North to the south end of the Upper Garrison, south of Building 9000. The 2nd Avenue extension will include asphalt, curb and gutter, sidewalks, and center median along with electrical power lines, data and communication lines, culinary water, natural gas and street lights. Construction on Oregon Avenue will add improvements along the north side of the roadway to include asphalt, curb and gutter, sidewalk, storm drainage lines and street lights. The 1st Avenue improvements between Utah Avenue and the south end of the Upper Garrison area will include asphalt, curb and gutter, improvement of some parking areas, culinary water, natural gas, data and telecommunication lines, some storm drainage lines and street lights.

Phase Two improvements will anticipate extending 1st Avenue from the Upper Garrison area southward then eastward into the Lower Garrison area and then along the Lower Garrison Avenue between 2600 North and the northern area near the Jordan River. The northern side of existing 2600 North street will be widened and improved in some areas.

Phase Two will include extending all utilities from the Upper Garrison area down to the Lower Garrison area, except sanitary sewer. The sanitary sewer will be a new system which will extend southward to

2600 North and connect into new lines in the Lehi City system. Culinary water lines will connect the Upper and Lower Garrison areas along the 1st Avenue extension as well as a location near Utah Avenue. Two large storm drainage detention basins will be constructed on the eastern edge of the Lower Garrison area as shown on the Master Plan. Two existing privately owned irrigation canals will be piped and/or relocated through the Lower Garrison area. Other utilities including culinary water, sanitary sewer, storm drainage, natural gas, electrical power, data and telecommunications lines and street lights will be constructed throughout the Lower Garrison area.

REFERENCES

1) "Utility Master Plan Documents and Plan", prepared by Mr. Stephen M. Ehninger, AIA et al of EFT Architects, 265 East 100 South - Suite 250, Salt Lake City, Utah 84111. Telephone (801) 521-8564.
2) "Preliminary Geotechnical Study", Gordon, Spilker, Huber Geotechnical Consultants, Inc., 4626 South Century Drive, Suite 100, Salt Lake City, Utah 84123. "Approximately 20 Acres of Land, East and South of the Existing Camp Williams Facilities." Dated June 29, 2007.
3) Mr. Dennis Borg, Maintenance Manager, Utah National Guard, Building 1190, Camp Williams, Utah. Telephone (801) 716-9263.
4) Captain Eric Holland, Project Manager, Utah National Guard, Camp Williams, Utah. Telephone (801) 716-9162.
5) Army National Guard DG 415-5, General Facilities Information Design Guide, Issued 18 May 2006, National Guard Bureau Installations Division, 111 South George Mason Drive, Arlington, VA 22204-1382.

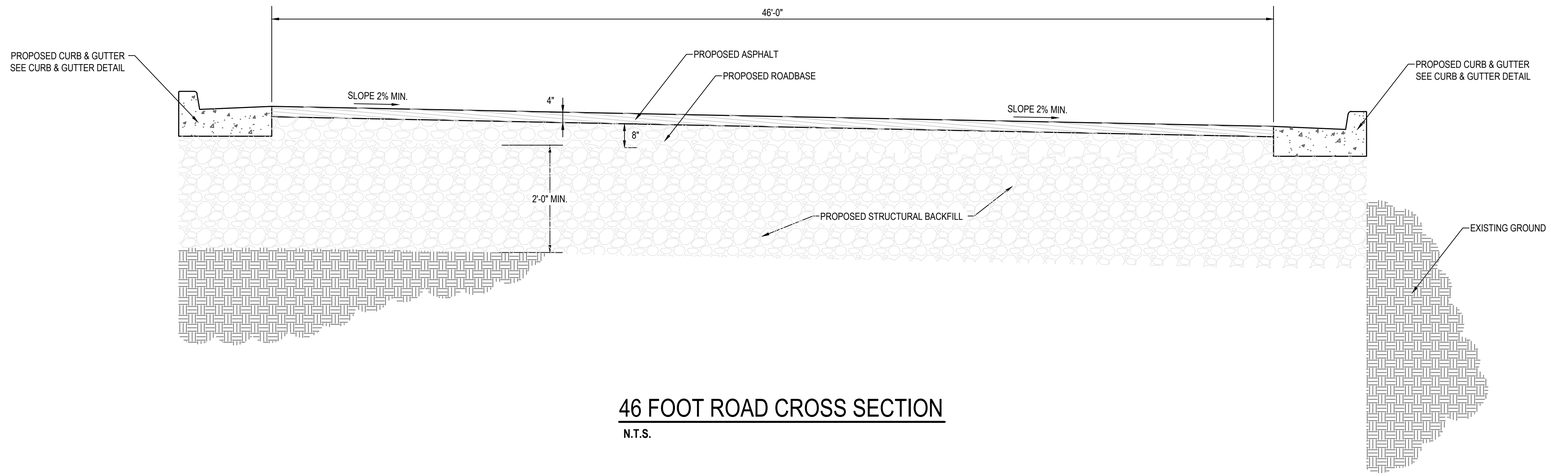

46 FOOT ROAD CROSS SECTION

N.T.S.

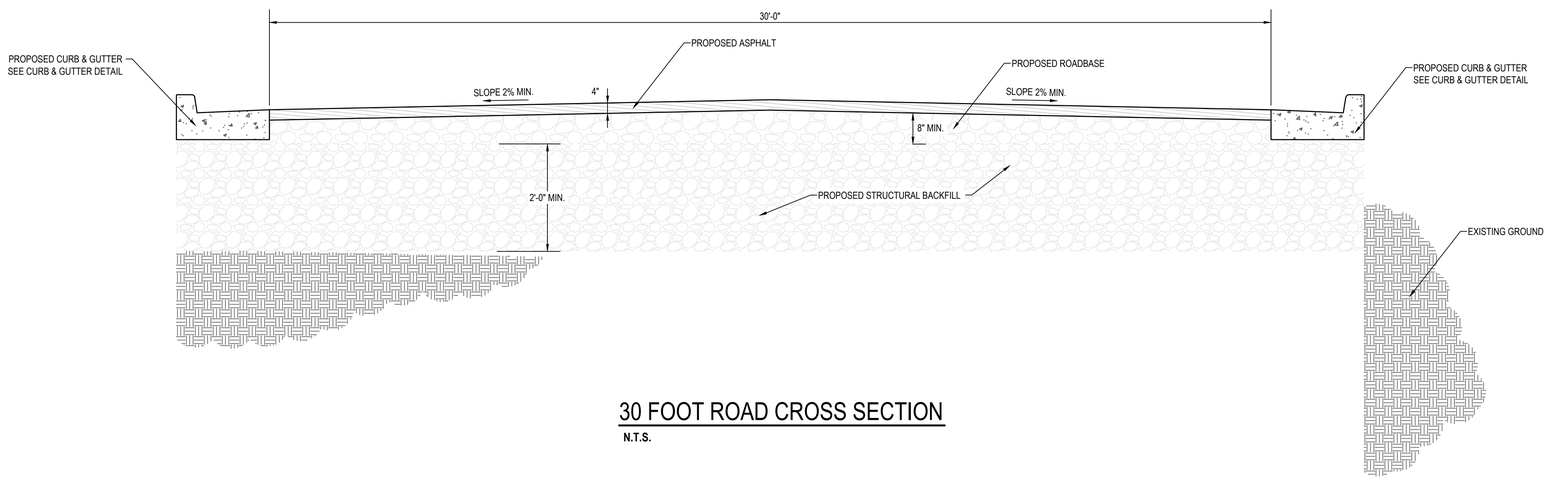

30 FOOT ROAD CROSS SECTION

N.T.S.

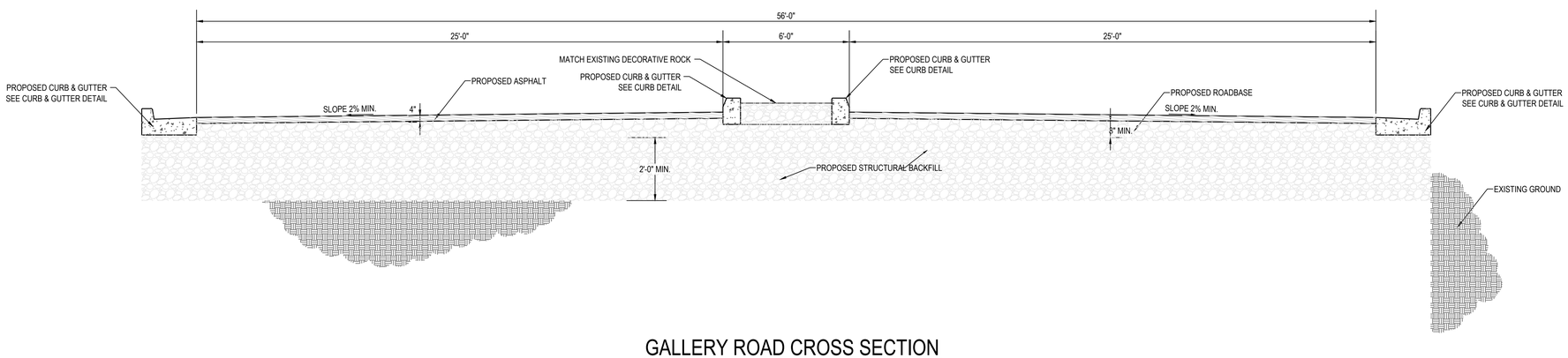

GALLERY ROAD CROSS SECTION

N.T.S.

ENSIGN ENGINEERING
1870 N MAIN, SUITE 104
CEDAR CITY, UT 84721
TEL. 435.865.1453
FAX 435.865.7318
WWW.ENSIGNUTAH.COM

ENSIGN

CAMP WILLIAMS PHASE I
UTILITY ROADS & INFRASTRUCTURE IIMPVOEMENT
TYPICAL ROAD CROSS SECTIONS

PREPARED FOR: UTAH NATIONAL GUARD

SUBMITTAL DATE: AUGUST 2013

NO.	DATE	REVISION	BY

PROJECT NUMBER: 5850
PRINT DATE: ----
DRAWN BY: CLN
CHECKED BY: KWC

SHEET 1 OF 1 SHEETS

DT-1

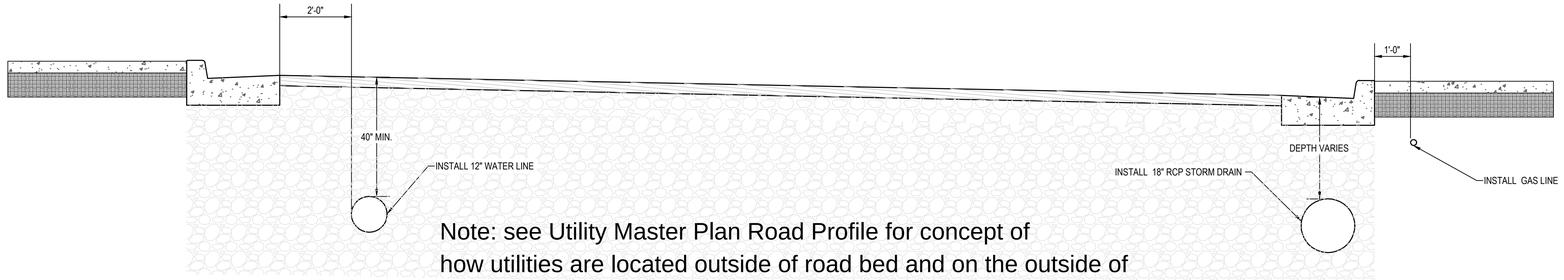

Note: see Utility Master Plan Road Profile for concept of how utilities are located outside of road bed and on the outside of the road profile and for separation of Utilities. This drawing is not Valid

TYPICAL UTILITY CROSS SECTION

N.T.S.

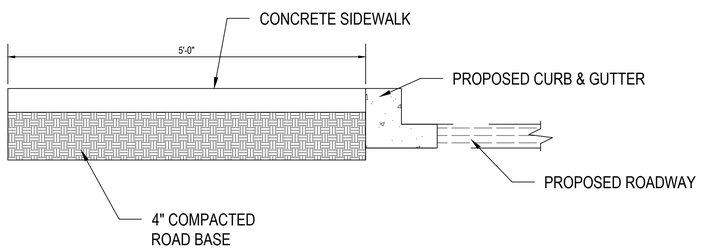

TYPICAL SIDEWALK CROSS SECTION

N.T.S.

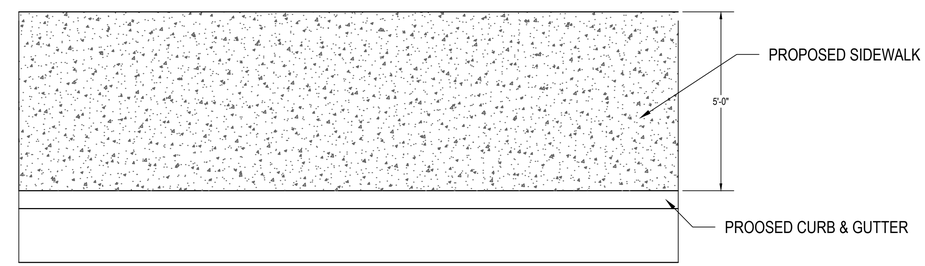

TYPICAL SIDEWALK PLAN VIEW

N.T.S.

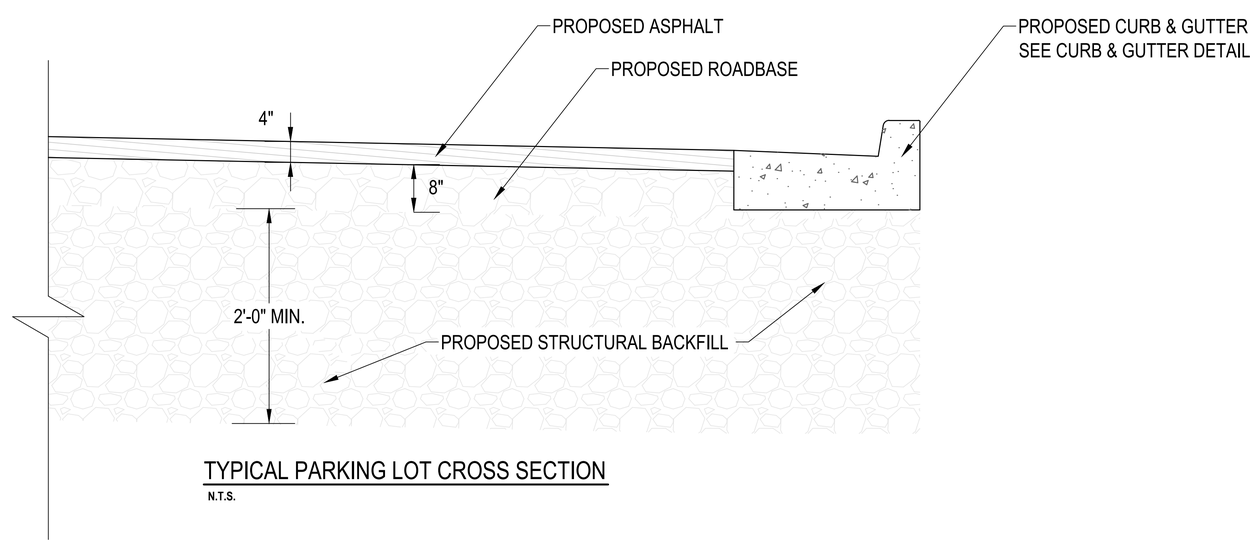

TYPICAL PARKING LOT CROSS SECTION

N.T.S.

ENSIGN ENGINEERING
1870 N MAIN, SUITE 104
CEDAR CITY, UT 84721
TEL. 435.865.1453
FAX 435.865.7318
WWW.ENSIGNUTAH.COM

ENSIGN

CAMP WILLIAMS PHASE I
UTILITY ROADS & INFRASTRUCTURE IIMPVOEMENT
TYPICAL SIDEWALK DETAIL & PARKING LOT

SUBMITTAL DATE: AUGUST 2013

PREPARED FOR: UTAH NATIONAL GUARD

NO.	DATE	REVISION	BY

PROJECT NUMBER: 5850
PRINT DATE: ----
DRAWN BY: CLN
CHECKED BY: KWC

SHEET 12 OF 4 SHEETS

DT-2

INTERMEDIATE TYPE (4'X4')
(5 FEET TO 20 FEET IN DEPTH)

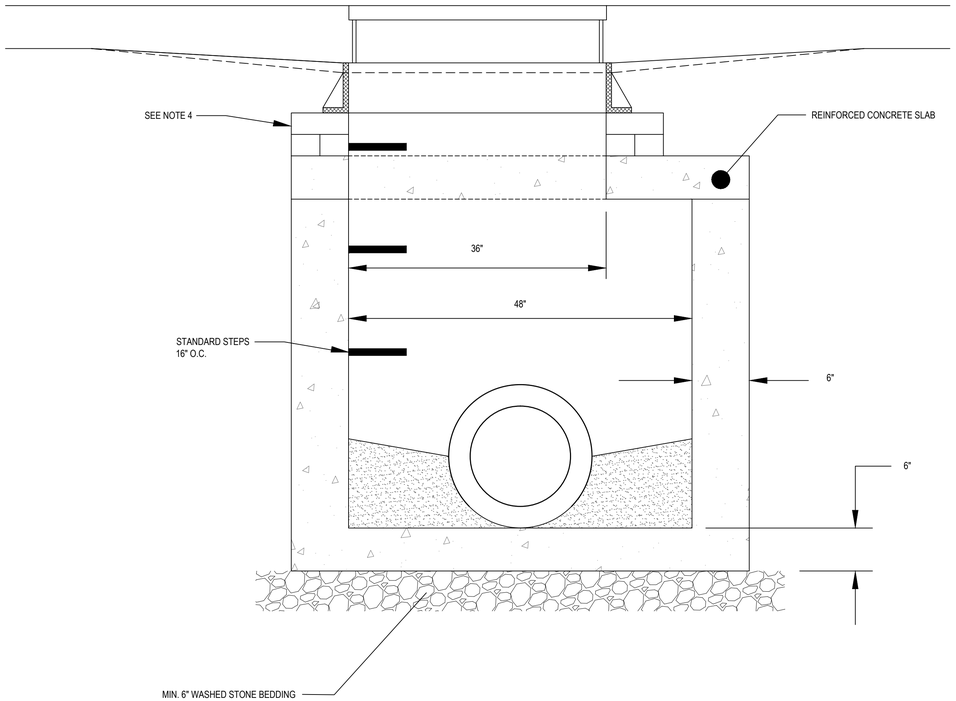

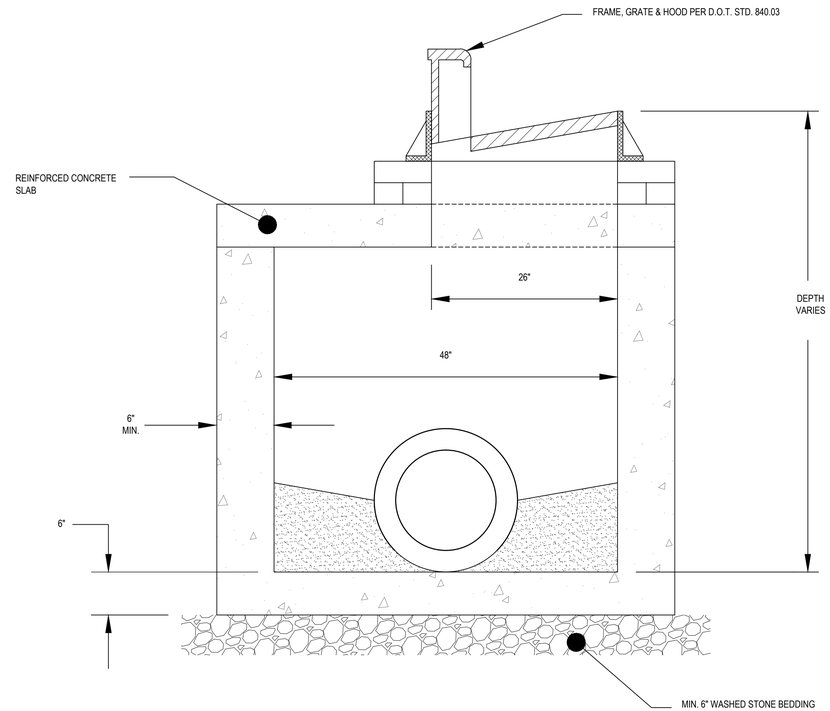

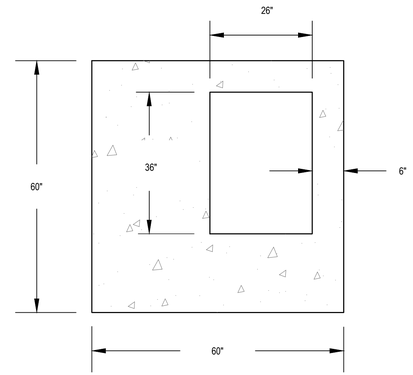

SLAB DETAIL

SLAB THICKNESS AND REINFORCEMENT FOR SOIL AND TRAFFIC LOADING BY AN ENGINEER

NOTES:

1. CONCRETE SHALL BE 4000 P.S.I. MINIMUM FOR ALL PRECAST CONCRETE CATCH BASINS.
2. PRECAST CONCRETE STRUCTURES MAY ONLY BE INSTALLED TO DEPTHS CERTIFIED AS ACCEPTABLE BY THE MANUFACTURER.
3. "WAFFLE" BOXES ARE ACCEPTABLE FOR SHALLOW TYPE CATCH BASINS.
4. BRICK MAY BE USED TO ADJUST FRAME, GRATE & HOOD TO SURFACE ELEVATION A MAXIMUM OF 12 INCHES.
5. DETAILS NOT TO SCALE

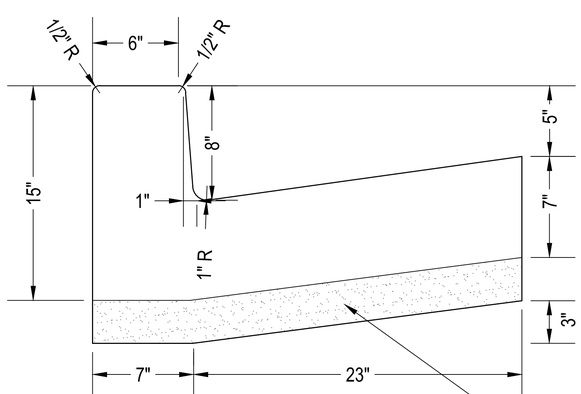

TYPE B2 CURB & GUTTER
AREA = 1.765 SQ FT

UNTREATED
BASE COURSE

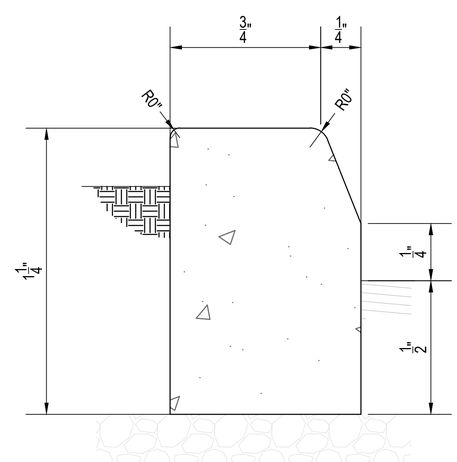

ENSIGN ENGINEERING
1870 N MAIN, SUITE 104
CEDAR CITY, UT 84721
TEL. 435.865.1453
FAX 435.865.7318
WWW.ENSIGNUTAH.COM

CAMP WILLIAMS PHASE I
UTILITY ROADS & INFRASTRUCTURE IIMPVOEMENT
TYPICAL ROAD CROSS SECTIONS

SUBMITTAL DATE: AUGUST 2013

PREPARED FOR: UTAH NATIONAL GUARD

NO.	DATE	REVISION	BY

PROJECT NUMBER: 5850
PRINT DATE: ----
DRAWN BY: CLN
CHECKED BY: KWC

SHEET 1 OF 1 SHEETS

DT-3

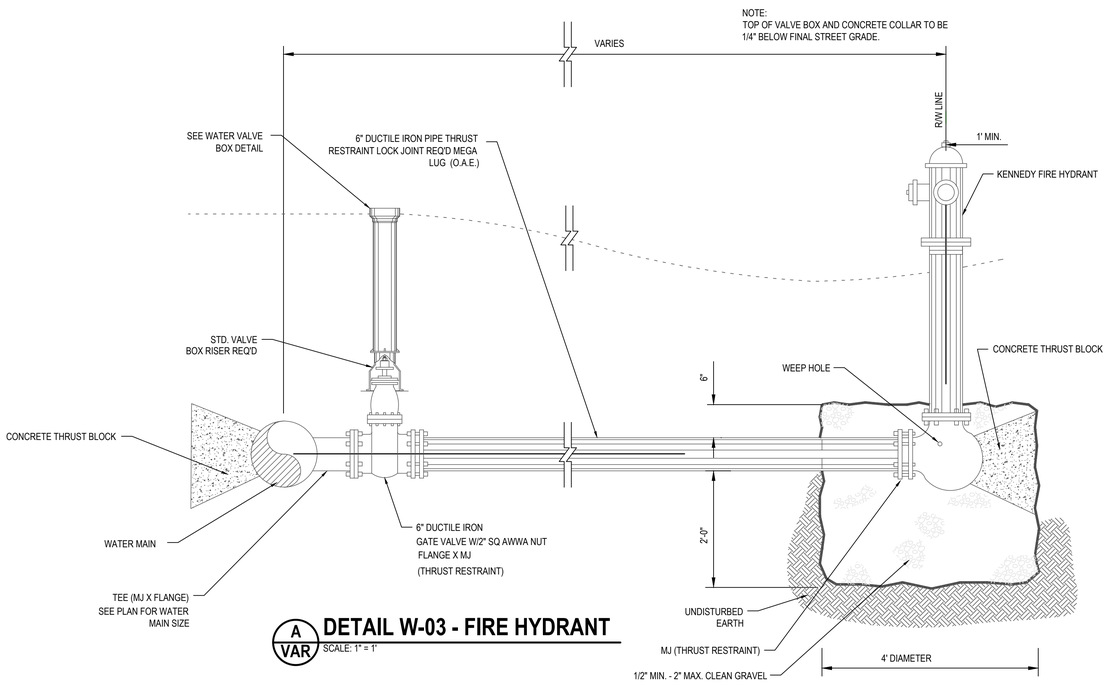

A VAR **DETAIL W-03 - FIRE HYDRANT**
SCALE: 1" = 1'

Verify Hydrant locations/spacing with local Fire Marshal and DFCM

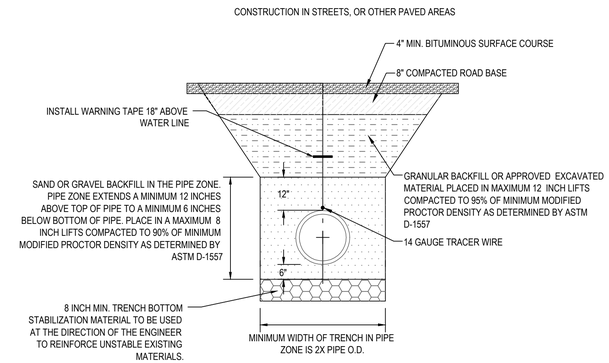

B VAR **DETAIL W-04 - TRENCH DETAIL**
SCALE: 1" = 1'

MINIMUM BEARING AREA* IN SQUARE FEET					
PIPE SIZE (IN.)	REDUCER, TEE,VALVE DEAD END	BENDS 90	45	22.5	11.25
4	4	4	4	4	4
6	5	6	4	4	4
8	8	11	6	4	4
10	12	17	9	5	4
12	17	24	14	7	4
14	24	33	18	9	5
16	31	43	24	12	6
18	40	55	32	16	8
24	70	98	53	27	14

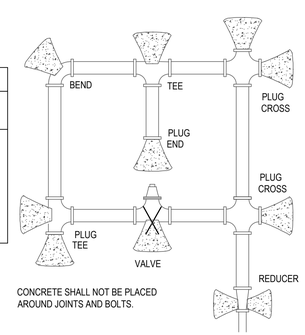

CONCRETE SHALL NOT BE PLACED AROUND JOINTS AND BOLTS.

BLOCKING SHALL BE POURED IN PLACE PORTLAND CEMENT CONCRETE A MINIMUM OF 12 INCHES THICK BETWEEN SOLID UNDISTURBED OR COMPACTED EARTH AND FITTING. THRUST BLOCK SHALL BE PLACED TO PERMIT ACCESS TO THE PIPE AND FITTING.

* MINIMUM BEARING AREAS ASSUME A WORKING PRESSURE OF UP TO 150 PSI (TEST PRESSURE 200 PSI) AND A MINIMUM SOIL BEARING PRESSURE OF 2000 PSI. IF THESE CONDITIONS ARE NOT MET, LARGER BLOCKING WILL BE REQUIRED.

C VAR **DETAIL W-05 - THRUST BLOCKS**
SCALE: N.T.S.

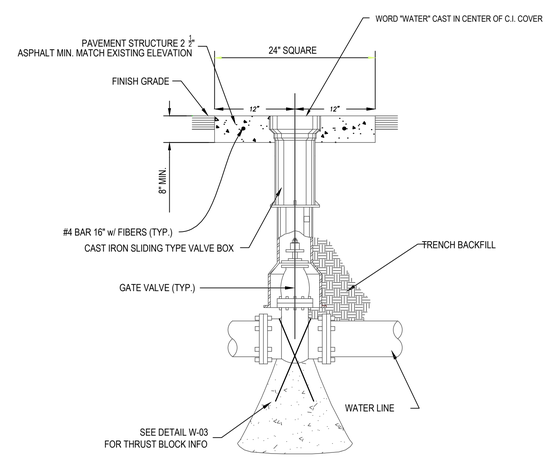

D VAR **WATER VALVE BOX DETAIL**
SCALE: N.T.S.

ENSIGN ENGINEERING
1870 N MAIN, SUITE 104
CEDAR CITY, UT 84721
TEL. 435.865.1453
FAX 435.865.7318
WWW.ENSIGNUTAH.COM

ENSIGN

CAMP WILLIAMS PHASE I
UTILITY ROADS & INFRASTRUCTURE IIMPVOEMENT
WATER DETAILS

PREPARED FOR: UTAH NATIONAL GUARD

SUBMITTAL DATE: AUGUST 2013

NO.	DATE	REVISION	BY

PROJECT NUMBER: 5850
PRINT DATE: ----
DRAWN BY: CLN
CHECKED BY: KWC

SHEET 4 OF 4 SHEETS

DT-4

P:\5850 UNG Camp Williams\Civil\GIS\Mapping\Overall Road Utility Map.mxd

ENSIGN ENGINEERING
1870 N MAIN, SUITE 104
CEDAR CITY, UT 84721
TEL. 435.865.1453
FAX 435.865.7318
WWW.ENSIGNUTAH.COM

ENSIGN

UTILITY, ROADS & PARKING INFRASTRUCTURE IMPROVEMENTS OVERALL PLAN

PREPARED FOR: CAMP WILLIAMS, UNG

SUBMITTAL DATE: AUGUST 2013

NO.	DATE	REVISION	BY

PROJECT NUMBER: 5404A
PRINT DATE: 8/7/2013
DRAWN BY: JTN
CHECKED BY: CLN

SHEET 1 OF 4 SHEETS

UT-1

Note: See Utility Master plan and Upper Garrison Drawings for exact configurations.

P:\5850 UNG Camp Williams\Civil\GIS\Mapping\Overall Road_Road.mxd

ENSIGN ENGINEERING
1870 N MAIN, SUITE 104
CEDAR CITY, UT 84721
TEL. 435.865.1453
FAX 435.865.7318
WWW.ENSIGNUTAH.COM

ENSIGN

UTILITY, ROADS & PARKING INFRASTRUCTURE IMPROVEMENTS PARKING & ROAD PLAN

PREPARED FOR: CAMP WILLIAMS, UNG

SUBMITTAL DATE: AUGUST 2013

NO.	DATE	REVISION	BY

PROJECT NUMBER: 5404A
PRINT DATE: 8/7/2013
DRAWN BY: JTN
CHECKED BY: CLN

SHEET 2 OF 4 SHEETS

UT-2

P:\5850 UNG Camp Williams\Civil\GIS\Mapping\Overall Road Curb.mxd

ENSIGN ENGINEERING
1870 N MAIN, SUITE 104
CEDAR CITY, UT 84721
TEL. 435.865.1453
FAX 435.865.7318
WWW.ENSIGNUTAH.COM

ENSIGN

UTILITY, ROADS & PARKING INFRASTRUCTURE IMPROVEMENTS CURB & GUTTER PLAN

PREPARED FOR: CAMP WILLIAMS, UNG

SUBMITTAL DATE: AUGUST 2013

NO.	DATE	REVISION	BY

PROJECT NUMBER: 5404A
PRINT DATE: 8/7/2013
DRAWN BY: JTN
CHECKED BY: CLN

SHEET 3 OF 4 SHEETS

UT-3

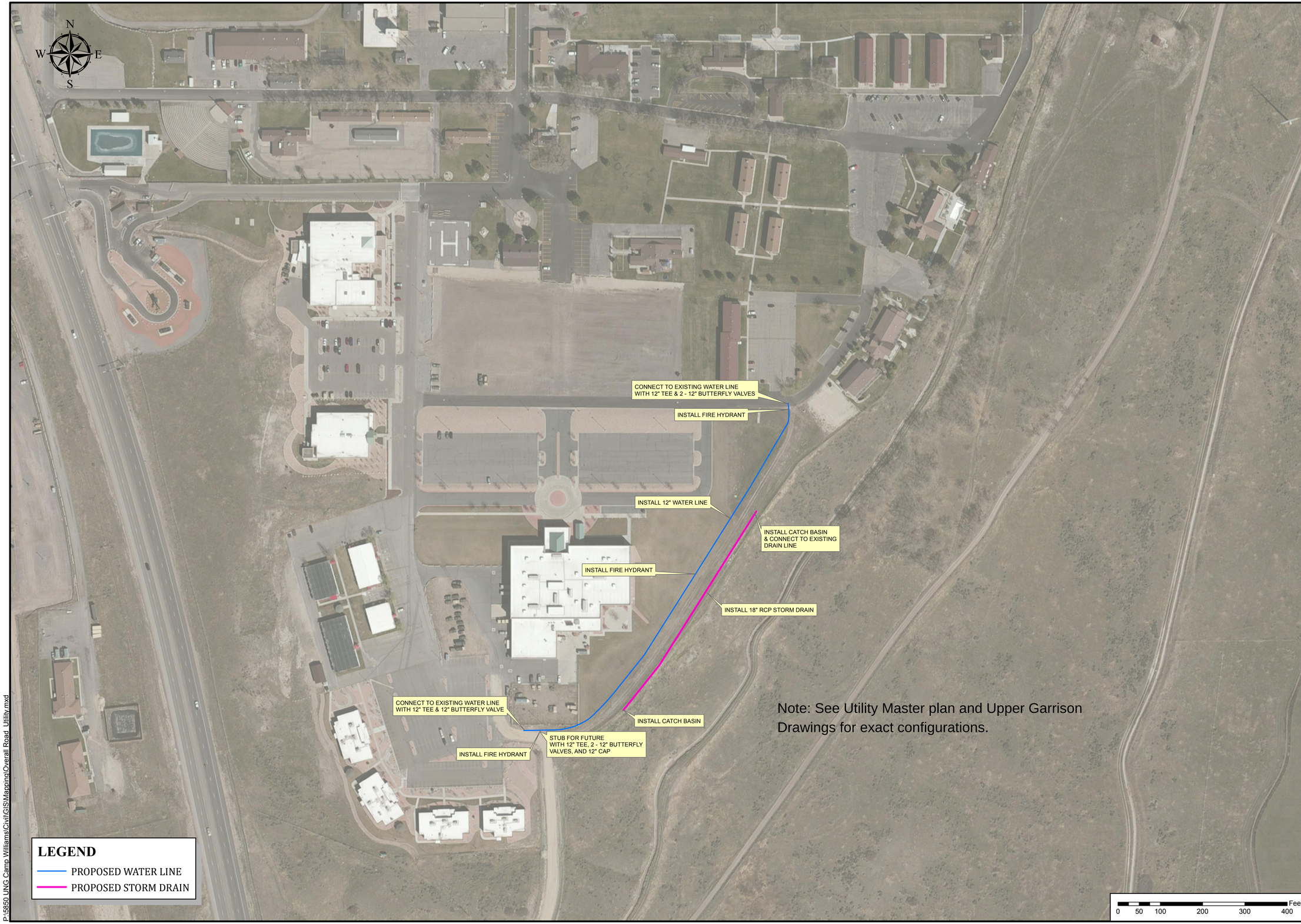

Note: See Utility Master plan and Upper Garrison Drawings for exact configurations.

P:\5850 UNG Camp Williams\Civil\GIS\Mapping\Overall Road Utility.mxd

ENSIGN ENGINEERING
1870 N MAIN, SUITE 104
CEDAR CITY, UT 84721
TEL. 435.865.1453
FAX 435.865.7318
WWW.ENSIGNUTAH.COM

ENSIGN

UTILITY, ROADS & PARKING INFRASTRUCTURE IMPROVEMENTS UTILITY PLAN

PREPARED FOR: CAMP WILLIAMS, UNG

SUBMITTAL DATE: AUGUST 2013

NO.	DATE	REVISION	BY

PROJECT NUMBER: 5404A
PRINT DATE: 8/7/2013
DRAWN BY: JTN
CHECKED BY: CLN

SHEET 4 OF 4 SHEETS

UT-4

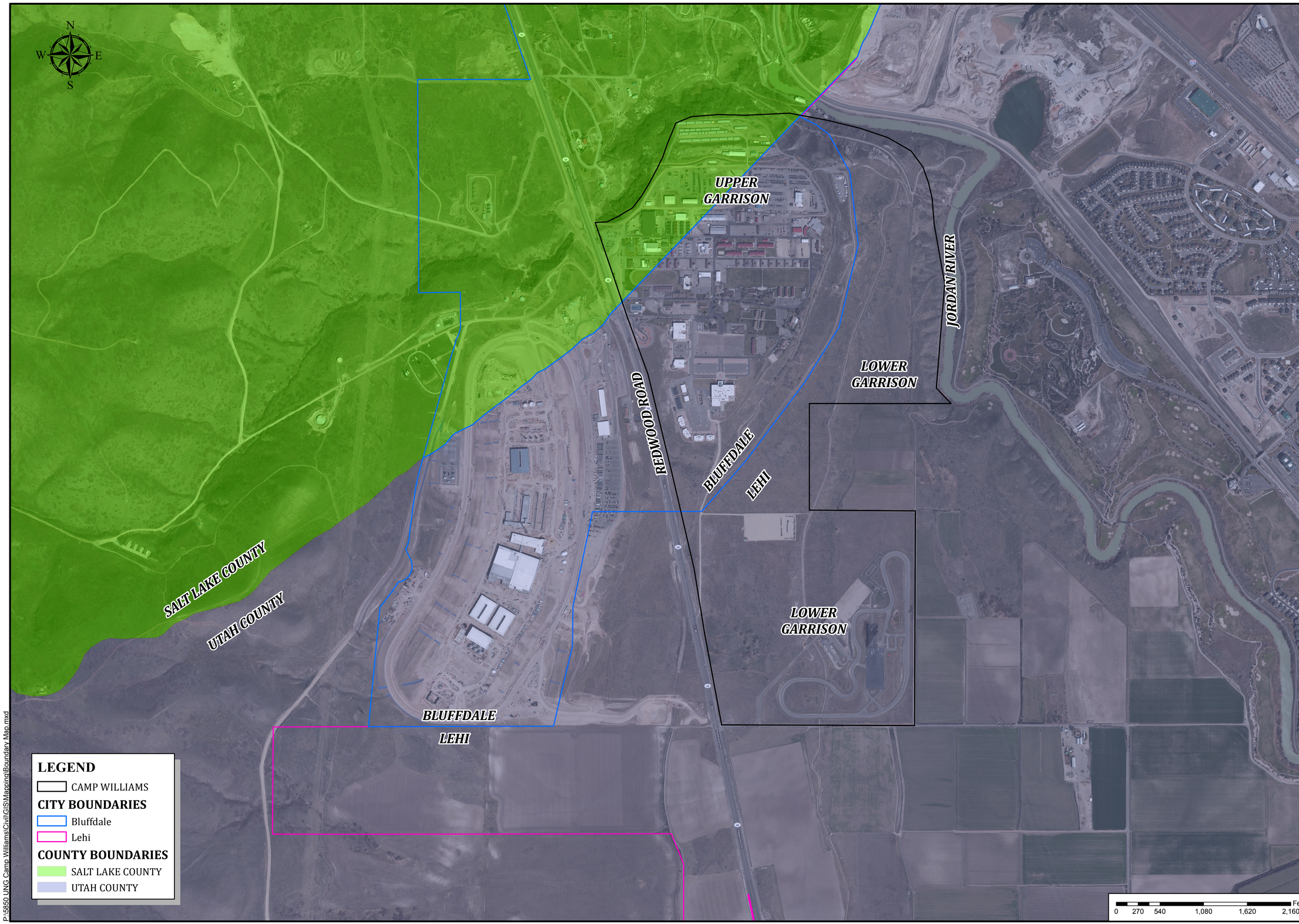

P:\5850 UNG Camp Williams\Civil\GIS\Mapping\Boundary Map.mxd

ENSIGN ENGINEERING
1870 N MAIN, SUITE 104
CEDAR CITY, UT 84721
TEL. 435.865.1453
FAX 435.865.7318
WWW.ENSIGNUTAH.COM

ENSIGN

UTILITY, ROADS & PARKING INFRASTRUCTURE IMPROVEMENTS BOUNDARY MAP

PREPARED FOR: CAMP WILLIAMS, UNG

SUBMITTAL DATE: AUGUST 2013

NO.	DATE	REVISION	BY

PROJECT NUMBER: 5404A
PRINT DATE: 8/8/2013
DRAWN BY: JTN
CHECKED BY: CLN

SHEET 1 OF 1 SHEET

BD-1

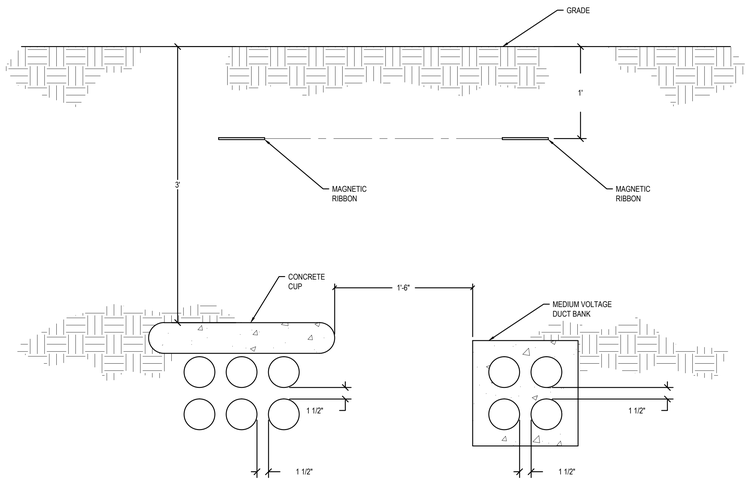

1 EX303 UTILITY SPACING
SCALE: NTS

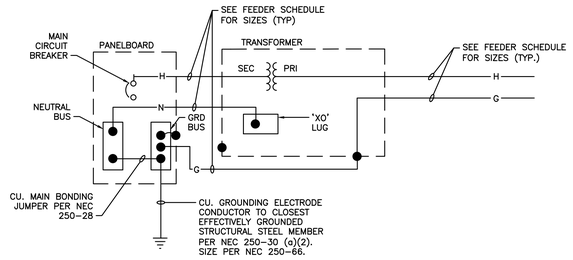

3 EX303 BONDING AND GROUNDING AT TRANSFORMER
SCALE: NTS

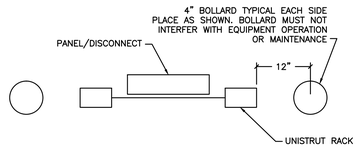

4 EX303 RACK PROTECTION
SCALE: NTS

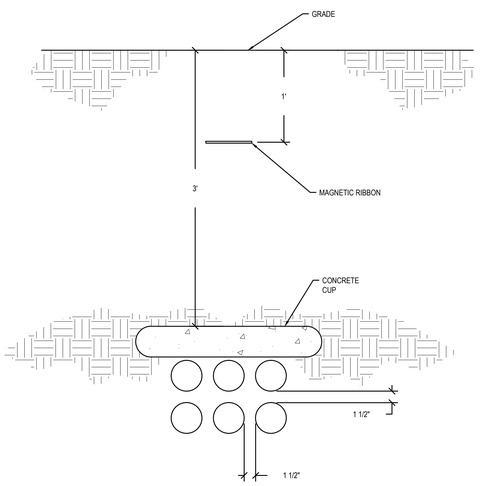

2 EX303 TELECOM DUCT BANK DETAIL
SCALE: NTS

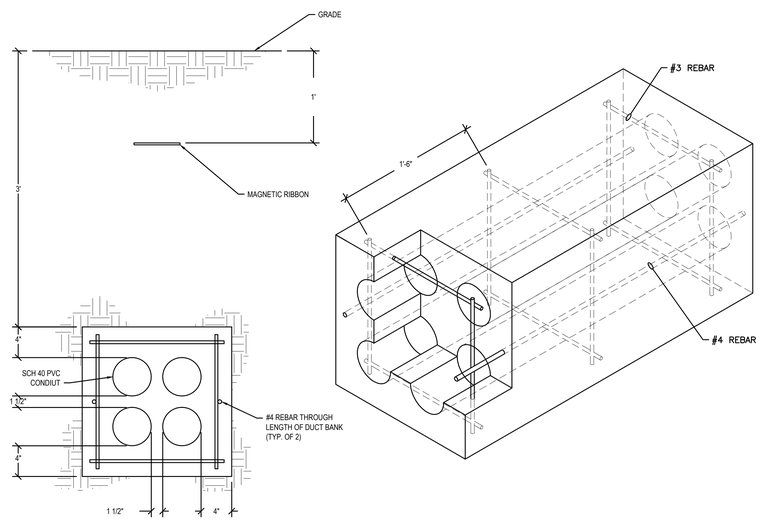

5 EX303 TYPICAL MEDIUM VOLTAGE DUCT BANK DETAIL
SCALE: NTS

State of Utah
Department of Administrative Services
Division of Facilities Construction & Management
4110 State Office Building
Salt Lake City, Utah 84114
Phone: (801) 538 - 3018
Fax: (801) 538 - 3267
Internet: http://dfcm.utah.gov

Ken Garner Engineering, Inc.
ELECTRICAL CONSULTING ENGINEERS
102 West 500 South, Suite 225
Salt Lake City, Utah 84101
Telephone: 801.328.8800
Fax: 801.328.8802
Contact: Ken Garner
Project #: 2013-071.00

Camp Williams Utility Phase I

UTAH NATIONAL GUARD - CAMP WILLIAMS
17800 SOUTH CAMP WILLIAMS RD
RIVERTON, UT 84065

ISSUED:

NO.	DATE	
1	08/08/13	30% DESIGN

REVISIONS:

NO.	DATE	

SHEET TITLE:
ELECTRICAL DETAILS

SHEET NUMBER:
EX303

By dgrant, Aug 08, 2013 - 2:53pm
K:\2013\2013-071A Camp Williams Utility Phase 1\Cad\EX303.dwg

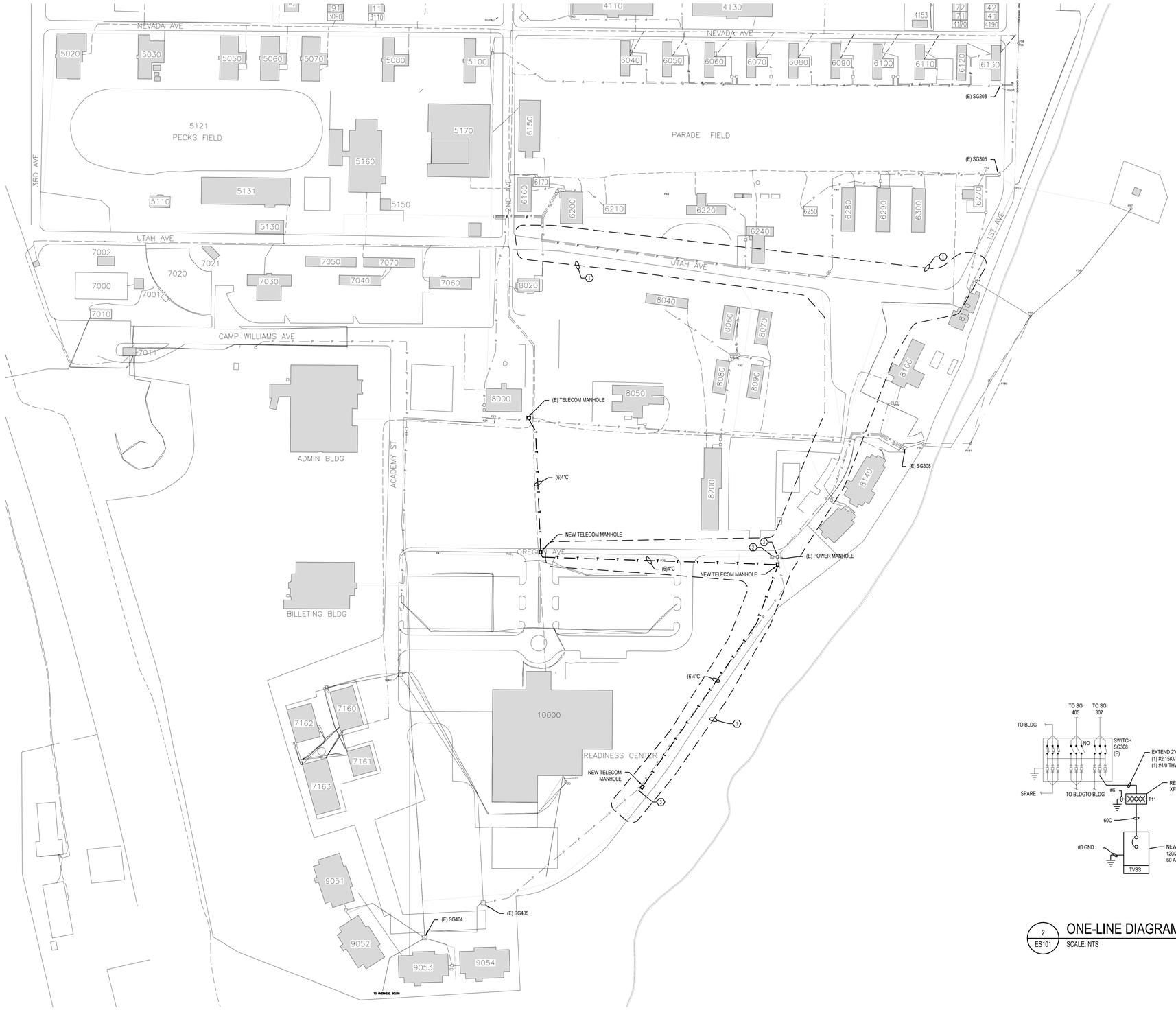

1 ES101 ELECTRICAL SITE PLAN

SCALE: 1" = 100'-0"

KEYED NOTE:

1. MODIFY EXISTING LIGHTING FOR NEW ROAD PROJECT.
2. RELOCATE 15KV TRANSFORMER FOR NEW ROAD PROJECT. PROVIDE NEW 60A 120/240V PANEL WITH TVSS FOR NEW ROAD LIGHTING.
3. RAISE OR LOWER EXISTING MANHOLE LID HEIGHT TO MATCH NEW ROAD GRADING.

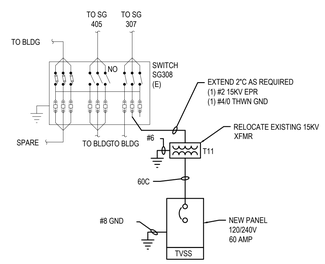

2 ES101 ONE-LINE DIAGRAM

SCALE: NTS

State of Utah
Department of Administrative Services

Division of Facilities Construction & Management
4110 State Office Building
Salt Lake City, Utah 84114
Phone: (801) 538 - 3018
Fax: (801) 538 - 3267

Internet: http://dfcm.utah.gov

Ken Garner Engineering, Inc.
ELECTRICAL CONSULTING ENGINEERS
102 West 500 South, Suite 225
Salt Lake City, Utah 84101
Telephone: 801.328.8800
Fax: 801.328.8802
Contact: Ken Garner
Project #: 2013-071.00

Camp Williams Utility Phase I

UTAH NATIONAL GUARD - CAMP WILLIAMS
17800 SOUTH CAMP WILLIAMS RD
RIVERTON, UT 84065

ISSUED:

NO.	DATE	
1	08/08/13	30% DESIGN

REVISIONS:

NO.	DATE	
1	11/17/09	PR#02R

SHEET TITLE:

ELECTRICAL SITE PLAN

SHEET NUMBER:

ES101

By: jhartman Aug 08, 2013 - 3:06pm
K:\2013\2013-071\00 Camp Williams Utility Phase 1\Cad\ES101.dwg

Appendix D

This Appendix contains the current 25 year master plan for Camp Williams and a current Aerial of existing conditions at Camp Williams

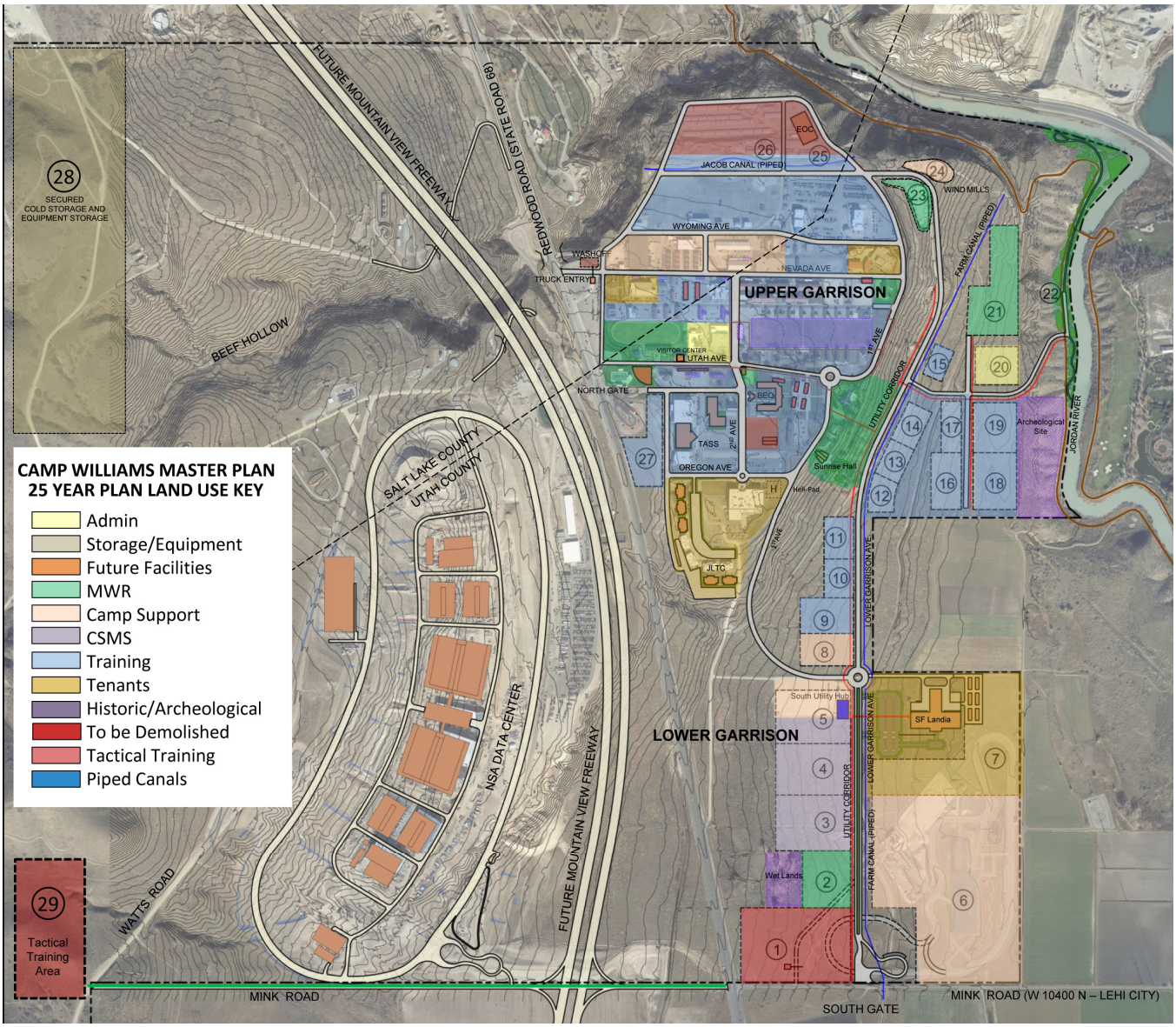

Current 25 year Master Plan for Camp Williams

Aerial of Camp Williams and surrounding areas

This Appendix contains the future BEQ site Plan

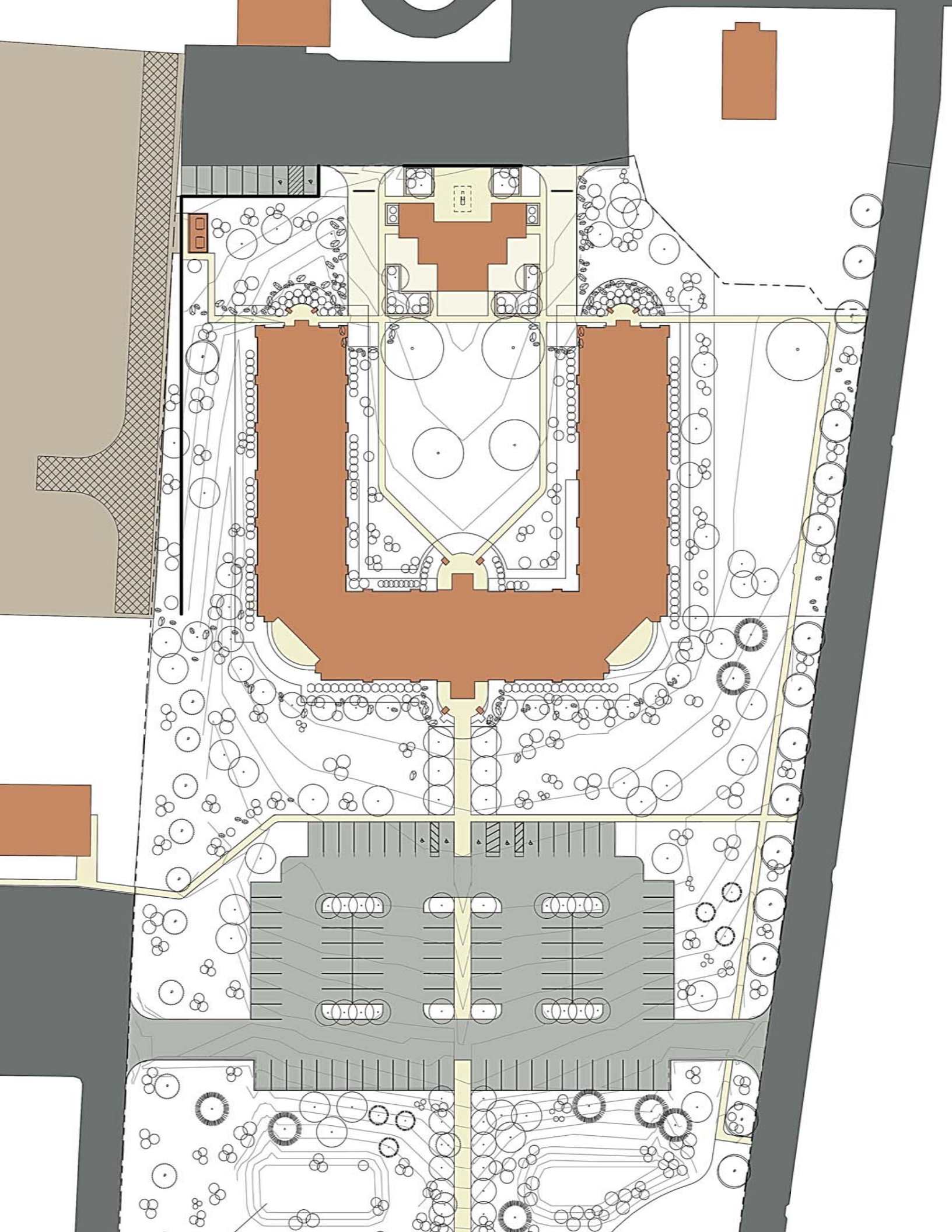

END OF DOCUMENT