State of Utah

GARY R. HERBERT
Governor

SPENCER J. COX
Lt. Governor

Department of Administrative Services
KIMBERLY K. HOOD
Executive Director

Division of Facilities Construction and Management
P. JOSHUA HAINES
Director

Addendum No. 1

Date:	June 2, 2014		
To:	Contractors		
From:	Wayne Smith – Project Manager, DFCM		
Reference:	South Garrison Infrastructure Phase II-Camp Williams Utah National Guard DFCM Project No. 13240480		
Subject:	**Addendum No. 1**		
Pages	Addendum Cover Sheet	1	page
	General Items	1	page
	Drawings	7	pages
	Total	9	pages

Note: This Addendum shall be included as part of the Contract Documents. Items in this Addendum apply to all drawings and specification sections whether referenced or not involving the portion of the work added, deleted, modified, or otherwise addressed in the Addendum. Acknowledge receipt of this Addendum in the space provided on the Bid Form. Failure to do so may subject the Bidder to Disqualification.

1.1 SCHEDULE CHANGES: There are no Project Schedule changes.

1.2 GENERAL ITEMS: Please see the Architect's Addendum dated May 29, 2014.

ADDENDUM #1
UNG-South Garrison Infrastructure Phase II
DFCM PROJECT # 1320480

May 29, 2014

Item #1 Scoping Documents. Phase 2 Scope Clarifications. Overview scoping document / reference drawings dated May 29, 2014, provided to assist bidders with management plans.

- Select Civil Drawings
- Select Electrical Drawings
- Landscape / Patriot Way Median Drawing

Item #2 Budget. Budget clarified as $6,800,000.

Item #3 Schedule. Schedule remains unchanged.

End of Addendum #1

CAMP WILLIAMS PHASE II
SOUTH GARRISON INFRASTRUCTURE

UTAH NATIONAL GUARD - CAMP WILLIAMS

17800 SOUTH CAMP WILLIAMS ROAD

RIVERTON, UTAH

STATEMENT OF QUALIFICATION - REFERENCE DRAWINGS

DFCM PROJECT NO. 13240480 MAY 29, 2014

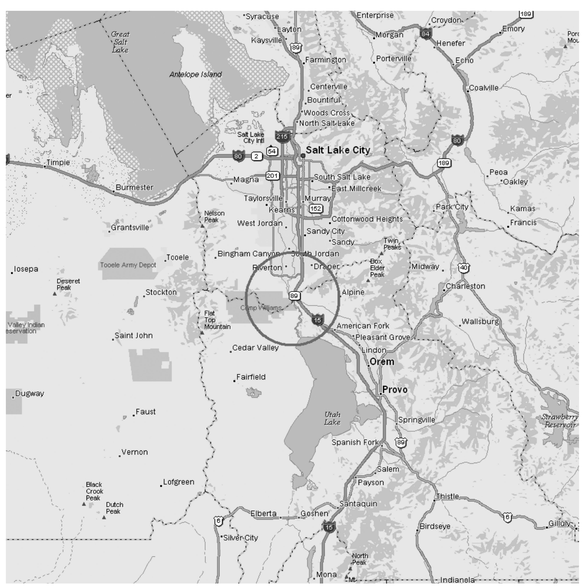

REGIONAL MAP

VICINITY

CIVIL ENGINEER

ENSIGN

45 WEST 10000 SOUTH, SUITE 500
SANDY , UTAH 84070
PH: 801.255.0529

ELECTRICAL ENGINEER

Ken Garner Engineering, Inc.

420 E. SOUTH TEMPLE
SUITE 370
SALT LAKE CITY, UT 84111
TEL. 801.328.8800
FAX. 801.328.8802

THE FOLLOWING DOCUMENTS ARE REQUIRED BEFORE A CERTIFICATE OF OCCUPANCY IS ISSUED:

1. A CODE INSPECTION REPORT RECOMMENDING THAT A CERTIFICATE OF OCCUPANCY BE ISSUED. (ONLY REQUIRED FOR NEW CONSTRUCTION, ADDITIONS, OR A CHANGE IN THE USE PER IBC CHAPTER 3.)
2. A CODE INSPECTION REPORT RECOMMENDING THAT FINAL APPROVAL OF THE PROJECT BE GIVEN.
3. FINAL REPORT FROM THE SPECIAL INSPECTION AGENCY.
4. CERTIFICATE OF FIRE CLEARANCE FROM THE STATE FIRE MARSHALL.
5. REPORT OF THE DISINFECTION OF THE POTABLE WATER SYSTEM. IPC 610
6. A CERTIFICATE OF COMPLIANCE FROM THE APPROVED FABRICATOR, IF APPLICABLE. IBC 1704.2.2
7. A STAMPED AND SIGNED FINAL REPORT FROM THE STRUCTURAL ENGINEER WHEN STRUCTURAL OBSERVATION IS REQUIRED BY IBC 1710.

EFT ARCHITECTS
265 EAST 100 SOUTH SUITE 250
SALT LAKE CITY, UTAH 84111-1604
801.521.8364 WWW.EFTARCH.COM

PROFESSIONAL STAMP

STATE OF UTAH
ERIC R. THOLEN
129665
5/28/14
LICENSED ARCHITECT

DFCM
4110 STATE OFFICE BUILDING
SALT LAKE CITY, UTAH 84114
PHONE: 801.538.3018

CODE OFFICIAL STAMP

DRAWINGS ARE IN COMPLIANCE WITH DFCM STANDARDS

CAMP WILLIAMS

UTAH NATIONAL GUARD

PHASE II SOUTH GARRISON INFRASTRUCTURE
17800 SOUTH CAMP WILLIAMS ROAD
RIVERTON, UTAH

ISSUE DESCRIPTION	DATE
ADDENDUM #1	05.29.14

ISSUED DATE	PLOTTED DATE
05.29.14	5.28.2014
EFT PROJECT NO.	DFCM PROJECT NO.
13013	13240480
DRAWN BY	CHECKED BY
CRO	ET

SHEET TITLE

COVER SHEET

SHEET NUMBER

PRE-QUALIFICATION - SCOPE STATEMENT

Camp Williams South Garrison Infrastructure Phase 2

Design Narrative

This project will expand Camp Williams' primary infrastructure from the current campus (Upper Garrison) to the currently undeveloped Lower Garrison which sits south and east of the existing campus. The scope of work will include the following:

- Grading for onsite retention ponds
- Grading for proposed roadways from upper garrison to Mink Road.
- Proposed road construction (including asphalt, curb and gutter, and flatwork)
- Installation of Water Lines (and applicable valves, tees, thrust blocks, air release assemblies, etc.), Sanitary Sewer Lines, Storm Sewer Lines, Telecommunications Duct bank, Power Duct Bank, Gas (by others), and various utility sleeves.
- Restoration of disturbed areas (slope stabilization)
- Relocate existing motorized gate at Mink Road.

Most of the construction will be in "greenfield", however, there are portions of roadway and utility points of connection which will require working around existing infrastructure. This condition primarily occurs at the two water line points of connection to Upper Garrison and the proposed road way (Patriot Way) tie-in to Mink Road.

The contractor which is awarded this work will need to work with the design team, DFCM, Utah National Guard, and the Farmer's Canal to install a Sewer crossing beneath the existing canal. At this point in time, it is assumed this work will require directional boring and the installation of a 24" diameter steel casing.

All work will need to comply with DFCM Code Approved Plans as well as Utah National Guard, DFCM, Lehi City (for portions of work completed in City ROW) and APWA standard specifications and details.

SCHEDULE OF UNIT PRICES

A. Unit Price No. 1: Install curb wall, center parkstrip complete with landscaping and irrigation, curb and gutter, asphalt paving and striping as shown in the drawings (section from Mink Road, north to roundabout).

1. Description: Base bid includes all utility work and preparation of sub-grade and road base. Unit price No.1 is for a cost for a 1,600 linear foot section of finished road section as described above.
2. Unit of Measurement: 1,600 linear foot section.

SCHEDULE OF ALTERNATES

A. Additive Alternate No. 1 - Add (1) 5" Conduit for future photovoltaic system in base bid ductbank to SG501.

B. Additive Alternate No. 2:

1. Run power and telecom conduit from lower garrison roundabout to Mink Rd.
2. Install conduits for lighting from lower garrison roundabout to Mink Rd. Provide j-boxes in place of pole bases.
3. Install conductors for power from SG503 to SG504.
4. Demolish overhead power from SG502 to SG504.
5. Relocate existing 4-way switch SG405 to SG504.
6. Install Conductors from new SG405 to SG501.

C. Additive Alternate No. 3 - Furnish and install light poles and conductors to lower garrison roundabout going northward.

D. Additive Alternate No. 4 - Furnish and install light poles and conductors to lower garrison roundabout to Mink Road.

DRAWING INDEX

ARCHITECTURAL	
G001	SHEET INDEX AND SCOPE STATEMENT
AS101	SITE LANDSCAPING
CIVIL	
C-001	COVER SHEET - CIVIL
C-002	GENERAL NOTES
C-003	DFCM & UNG FORMS
C-100	OVERALL DEMOLITION PLAN
C-101.K	DEMOLITION PLAN
C-101.O	DEMOLITION PLAN
C-101.R	DEMOLITION PLAN
C-101.S	DEMOLITION PLAN
C-101.U	DEMOLITION PLAN
C-101.V	DEMOLITION PLAN
C-101.Y	DEMOLITION PLAN
C-101.BB	DEMOLITION PLAN
C-101.EE	DEMOLITION PLAN
C-101.DD	DEMOLITION PLAN
C-101.W	DEMOLITION PLAN
C-101.Z	DEMOLITION PLAN
C-101.CC	DEMOLITION PLAN
C-101.FF	DEMOLITION PLAN
C-200	OVERALL SITE PLAN
C-201.K	SITE PLAN
C-201.O	SITE PLAN
C-201.R	SITE PLAN
C-201.S	SITE PLAN
C-201.U	SITE PLAN
C-201.V	SITE PLAN
C-201.Y	SITE PLAN
C-201.BB	SITE PLAN
C-201.DD	SITE PLAN
C-201.W	SITE PLAN
C-201.Z	SITE PLAN
C-201.CC	SITE PLAN
C-201.FF	SITE PLAN
C-300	OVERALL UTILITY PLAN
C-301.K	UTILITY PLAN
C-301.O	UTILITY PLAN
C-301.R	UTILITY PLAN
C-301.S	UTILITY PLAN
C-301.U	UTILITY PLAN
C-301.V	UTILITY PLAN
C-301.Y	UTILITY PLAN
C-301.BB	UTILITY PLAN
C-301.EE	UTILITY PLAN
C-301.W	UTILITY PLAN
C-301.Z	UTILITY PLAN
C-301.CC	UTILITY PLAN
C-301.FF	UTILITY PLAN
C-400	OVERALL GRADING & DRAINAGE PLAN
C-400.1	DRAINAGE SUB-BASIN PLAN
C-401.R	GRADING & DRAINAGE PLAN
C-401.U	GRADING & DRAINAGE PLAN
C-401.V	GRADING & DRAINAGE PLAN
C-401.Y	GRADING & DRAINAGE PLAN
C-401.BB	GRADING & DRAINAGE PLAN
C-401.EE	GRADING & DRAINAGE PLAN
C-500	OVERALL EROSION CONTROL PLAN
C-501.K	EROSION CONTROL PLAN
C-501.R	EROSION CONTROL PLAN
C-501.U	EROSION CONTROL PLAN
C-501.V	EROSION CONTROL PLAN
C-501.Y	EROSION CONTROL PLAN
C-501.BB	EROSION CONTROL PLAN
C-501.EE	EROSION CONTROL PLAN
C-501.W	EROSION CONTROL PLAN
C-501.Z	EROSION CONTROL PLAN
C-501.CC	EROSION CONTROL PLAN
C-501.FF	EROSION CONTROL PLAN
C-601	SECTIONS AND DETAILS
C-602	SECTIONS AND DETAILS
C-603	SECTIONS AND DETAILS
C-604	SECTIONS AND DETAILS
C-605	SECTIONS AND DETAILS
C-606	SECTIONS AND DETAILS
PP-1	PLAN AND PROFILE
PP-2	PLAN AND PROFILE
PP-3	PLAN AND PROFILE
PP-4	PLAN AND PROFILE
PP-5	PLAN AND PROFILE
PP-6	PLAN AND PROFILE
PP-7	PLAN AND PROFILE
PP-8	PLAN AND PROFILE
PP-9	PLAN AND PROFILE
PP-10	PLAN AND PROFILE
PP-11	PLAN AND PROFILE
PP-12	PLAN AND PROFILE
PP-13	PLAN AND PROFILE
PP-14	PLAN AND PROFILE
PP-15	PLAN AND PROFILE
PP-16	PLAN AND PROFILE
PP-17	PLAN AND PROFILE
ELECTRICAL	
EG001	SYMBOLS, ABBREVIATIONS AND INDEX
ES101	UPPER AND LOWER ELECTRICAL SITE PLAN
ED101-R	DEMOLITION SITE PLAN AREA 'R' PHASE 2
ED101-U	DEMOLITION SITE PLAN AREA 'U' PHASE 2
ED101-X	DEMOLITION SITE PLAN AREA 'X' PHASE 2
ED101-AA	DEMOLITION SITE PLAN AREA 'AA' PHASE 2
ED101-BB	DEMOLITION SITE PLAN AREA 'BB' PHASE 2
ED101-EE	DEMOLITION SITE PLAN AREA 'EE' PHASE 2
ED601	EQUIPMENT BUILDING DEMO PLAN PHASE 2
EL101-R	LIGHTING SITE PLAN AREA 'R' PHASE 2
EL101-U	LIGHTING SITE PLAN AREA 'U' PHASE 2
EL101-V	LIGHTING SITE PLAN AREA 'V' PHASE 2
EL101-Y	LIGHTING SITE PLAN AREA 'Y' PHASE 2
EL101-BB	LIGHTING SITE PLAN AREA 'BB' PHASE 2
EL101-EE	LIGHTING SITE PLAN AREA 'EE' PHASE 2
EP101-E	POWER SITE PLAN AREA 'E' PHASE 2
EP101-I	POWER SITE PLAN AREA 'I' PHASE 2
EP101-M	POWER SITE PLAN AREA 'M' PHASE 2
EP101-Q	POWER SITE PLAN AREA 'Q' PHASE 2
EP101-R	POWER SITE PLAN AREA 'R' PHASE 2
EP101-U	POWER SITE PLAN AREA 'U' PHASE 2
EP101-V	POWER SITE PLAN AREA 'V' PHASE 2
EP101-Y	POWER SITE PLAN AREA 'Y' PHASE 2
EP101-BB	POWER SITE PLAN AREA 'BB' PHASE 2
EP101-EE	POWER SITE PLAN AREA 'EE' PHASE 2
EP601	EQUIPMENT BUILDING POWER PLAN PHASE 2
EX101	NEW ONE-LINE DIAGRAM PHASE 2
EX102	ELECTRICAL DETAILS PHASE 2
EX103	ELECTRICAL DETAILS PHASE 2
EX104	ELECTRICAL DETAILS PHASE 2
EX105	ELECTRICAL DETAILS PHASE 2
EX201	COMBINED ONE-LINE DIAGRAM

EFT ARCHITECTS
265 EAST 100 SOUTH SUITE 250
SALT LAKE CITY, UTAH 84111-1604
801.521.8564 WWW.EFTARCH.COM

PROFESSIONAL STAMP

STATE OF UTAH
ERIC R. THOLEN
129665
5/29/14
LICENSED ARCHITECT

DFCM
4110 STATE OFFICE BUILDING
SALT LAKE CITY, UTAH 84114
PHONE: 801.538.3018

CODE OFFICIAL STAMP

DRAWINGS ARE IN COMPLIANCE WITH DFCM STANDARDS

CAMP WILLIAMS

PHASE II SOUTH GARRISON INFRASTRUCTURE
17800 SOUTH CAMP WILLIAMS ROAD
RIVERTON, UTAH

ISSUE DESCRIPTION	DATE
ADDENDUM #1	05.29.14

ISSUED DATE: 05.29.14	PLOTTED DATE: 5.29.2014
EFT PROJECT NO.: 13013	DFCM PROJECT NO.: 13240480
DRAWN BY: CRO	CHECKED BY: ET

SHEET TITLE

INDEX SHEET AND SCOPE STATEMENT

SHEET NUMBER

G001

PLANT SCHEDULE

GRASSES	BOTANICAL NAME	COMMON NAME	CONT
CA	Calamagrostis x acutiflora Karl Foerster	Feather Reed Grass	1 gal
MS	Miscanthus sinensis Adagio	Adagio Eulalia Grass	1 gal
NATIVE PERENNIAL	**BOTANICAL NAME**	**COMMON NAME**	**CONT**
O	Pensternon cyananthus	Wasatch pensternon	1 gal
P	Pensternon pinifolius Mersea Yellow	Yellow Threadleaf Beardtongue	1 gal
NATIVE SHRUBS	**BOTANICAL NAME**	**COMMON NAME**	**CONT**
CM	Cercocarpus montanus	Alderleaf Mountain Mahogany	5 gal

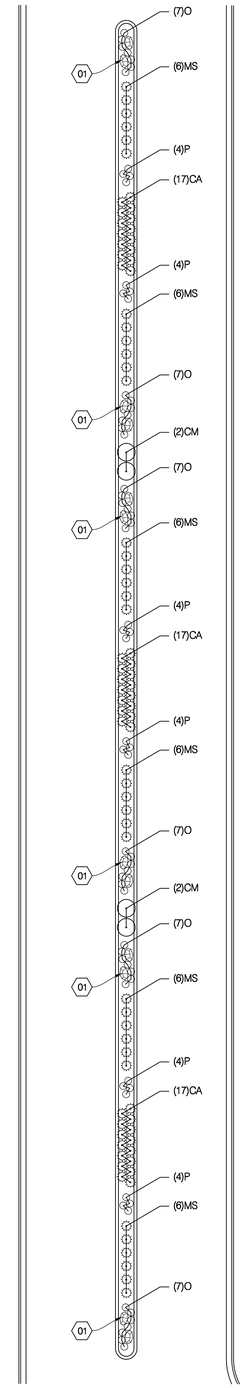

A2 TYPICAL LANDSCAPING
1"= 20'-0"

0 20 40

PLAN NORTH

KEY NOTES

1. BOULDERS ARE SHOWN SCHEMATICALLY. SIZE AND SHAPE WILL VARY WITH 2 FT MINIMUM DIAMETER EACH. PLACEMENT GUIDELINES - PLACE BOULDERS WITH RANDOM SPACING WITH NO SPACING GREATER THAN 6 FT.

EFT ARCHITECTS
265 EAST 100 SOUTH SUITE 250
SALT LAKE CITY, UTAH 84111-1604
801.521.8564 WWW.EFTARCH.COM

PROFESSIONAL STAMP

STATE OF UTAH
ERIC R. THOLEN
129665
5/29/14
LICENSED ARCHITECT

DFCM
4110 STATE OFFICE BUILDING
SALT LAKE CITY, UTAH 84114
PHONE: 801.538.3018

CODE OFFICIAL STAMP

DRAWINGS ARE IN COMPLIANCE WITH DFCM STANDARDS

CAMP WILLIAMS

UTAH NATIONAL GUARD

PHASE II SOUTH GARRISON INFRASTRUCTURE
17800 SOUTH CAMP WILLIAMS ROAD
RIVERTON, UTAH

ISSUE DESCRIPTION	DATE
ADDENDUM #1	05.29.14

ISSUED DATE	PLOTTED DATE
05.29.14	5.29.2014
EFT PROJECT NO.	DFCM PROJECT NO.
13013	13240480
DRAWN BY	CHECKED BY
CRO	ET

SHEET TITLE

SITE LANDSCAPING

SHEET NUMBER

AS101

BASE BID FOR PATRIOT WAY
INCLUDES ALL ROAD GRADING, PAVING, GRADING, RETENTION PONDS, DRAINAGE AND UTILITY IMPROVEMENTS SHOWN ON THE PLANS. EXCLUDES CURBING, PAVEMENT, PAVEMENT STRIPING, AND LANDSCAPING IN PATRIOT WAY, SOUTH OF THE ROUNDABOUT AS SHOWN ON PLANS.

UNIT PRICING FOR PATRIOT WAY
AREA LIMITED TO PATRIOT WAY, SOUTH OF THE ROUNDABOUT. INCLUDES CURBING, PAVEMENT, PAVEMENT STRIPING AND LANDSCAPING AS SHOWN ON PLANS.

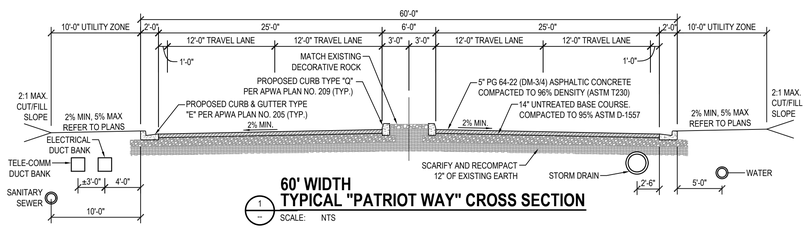

1 – 60' WIDTH TYPICAL "PATRIOT WAY" CROSS SECTION
SCALE: NTS

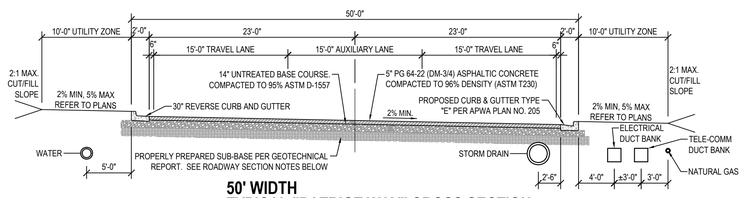

2 – 50' WIDTH TYPICAL "PATRIOT WAY" CROSS SECTION
SCALE: NTS

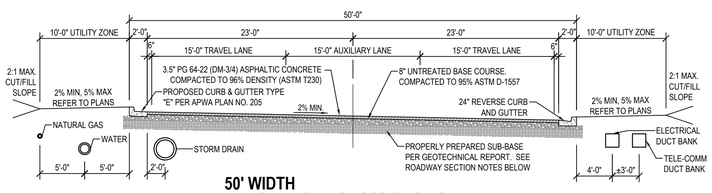

3 – 50' WIDTH TYPICAL ROAD CROSS SECTION
SCALE: NTS

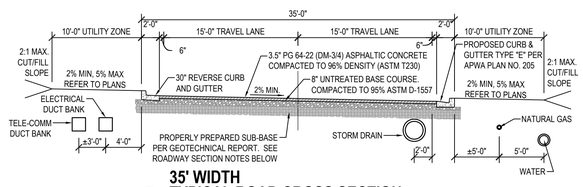

4 – 35' WIDTH TYPICAL ROAD CROSS SECTION
SCALE: NTS

ROADWAY SECTION NOTES:

1. ALL ROADS HAVE CUT AND FILL SLOPES OF 2.5:1 UNLESS NOTED ON PLANS.
2. CONTRACTOR TO COMPLY WITH IGES GEOTECHNICAL REPORT (CAMP WILLIAMS 200 ACRE EXPANSION REPORT) DATED OCTOBER 17, 2013 FOR COMPACTION SPECIFICATIONS REGARDING SITE PREPARATION, GRADING, COMPACTION, ETC.

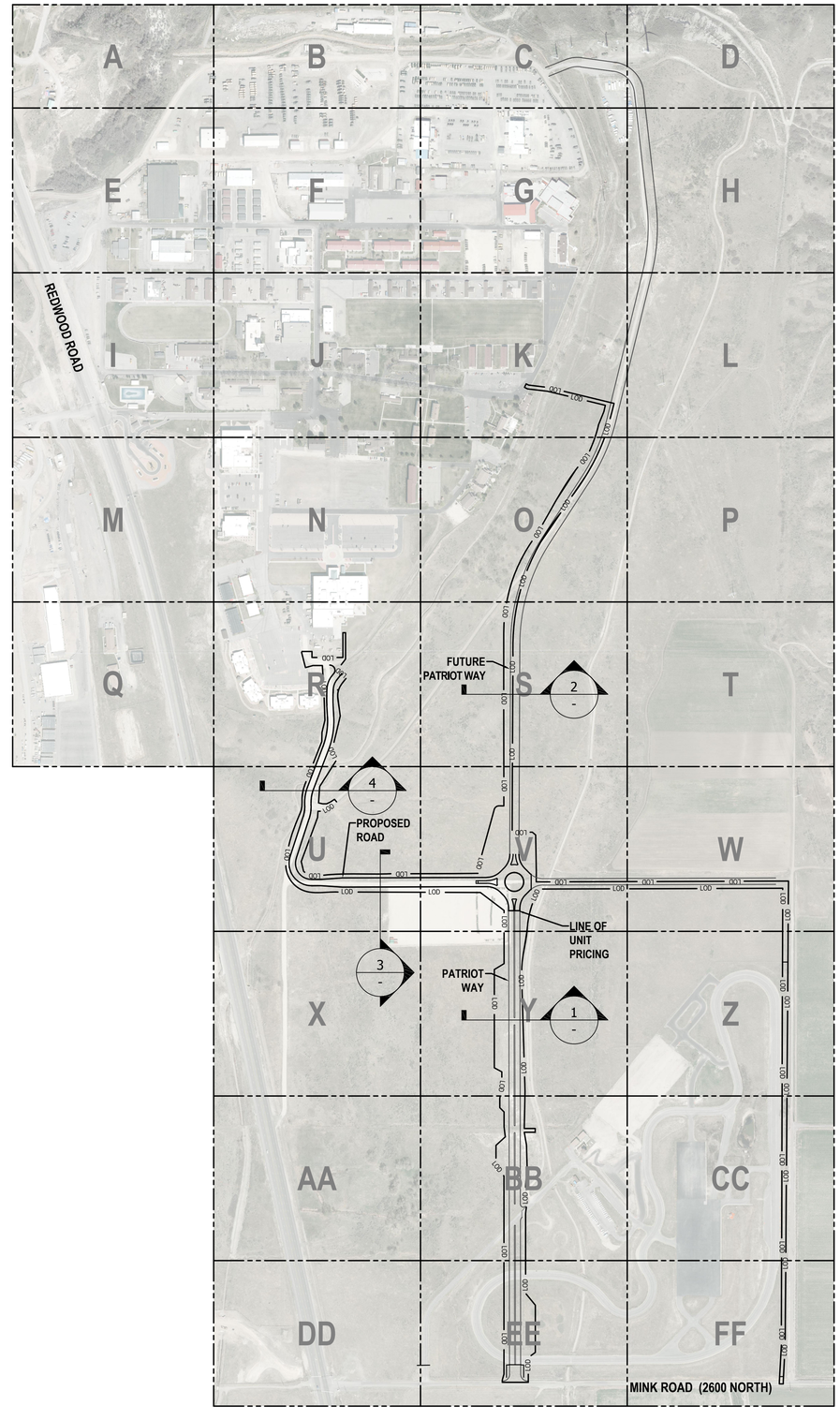

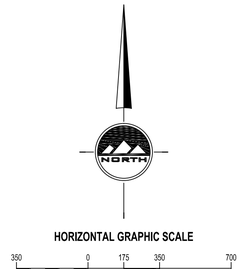

EFT ARCHITECTS
265 EAST 100 SOUTH SUITE 250
SALT LAKE CITY, UTAH 84111-1604
801.521.8564 WWW.EFTARCH.COM

PROFESSIONAL STAMP
LICENSED PROFESSIONAL ENGINEER
Kody J. Morgan
No. 5567061
5-28-14
STATE OF UTAH

DFCM
4110 STATE OFFICE BUILDING
SALT LAKE CITY, UTAH 84114
PHONE: 801.538.3018

CODE OFFICIAL STAMP

DRAWINGS ARE IN COMPLIANCE WITH DFCM STANDARDS

CAMP WILLIAMS

PHASE II SOUTH GARRISON INFRASTRUCTURE
17800 SOUTH CAMP WILLIAMS ROAD
RIVERTON, UTAH

ISSUE DESCRIPTION	DATE

ISSUED DATE	PLOTTED DATE
05.28.14	5.29.2014
EFT PROJECT NO.	DFCM PROJECT NO.
13013	13240480
DRAWN BY	CHECKED BY
B. PAGE	K. MORGAN

SHEET TITLE
OVERALL SITE PLAN

SHEET NUMBER
C-200

ENSIGN
SALT LAKE CITY
45 West 10000 South
Suite 500
Sandy, UT 84070
Phone: 801.255.0529
Fax: 801.255.4449
LAYTON
Phone: 801.547.1100
TOOELE
Phone:435.843.3590
CEDAR CITY
Phone:435.865.1453
WWW.ENSIGNUTAH.COM

CALL CAMP W.G. WILLIAMS UTAH TRAINING CENTER DEPARTMENT OF PUBLIC WORKS @ 801-878-5768 AT LEAST 48 HOURS PRIOR TO THE COMMENCEMENT OF ANY CONSTRUCTION.

1 ES101 UPPER GARRISON ELECTRICAL SITE PLAN

SCALE: 1" = 300'-0"

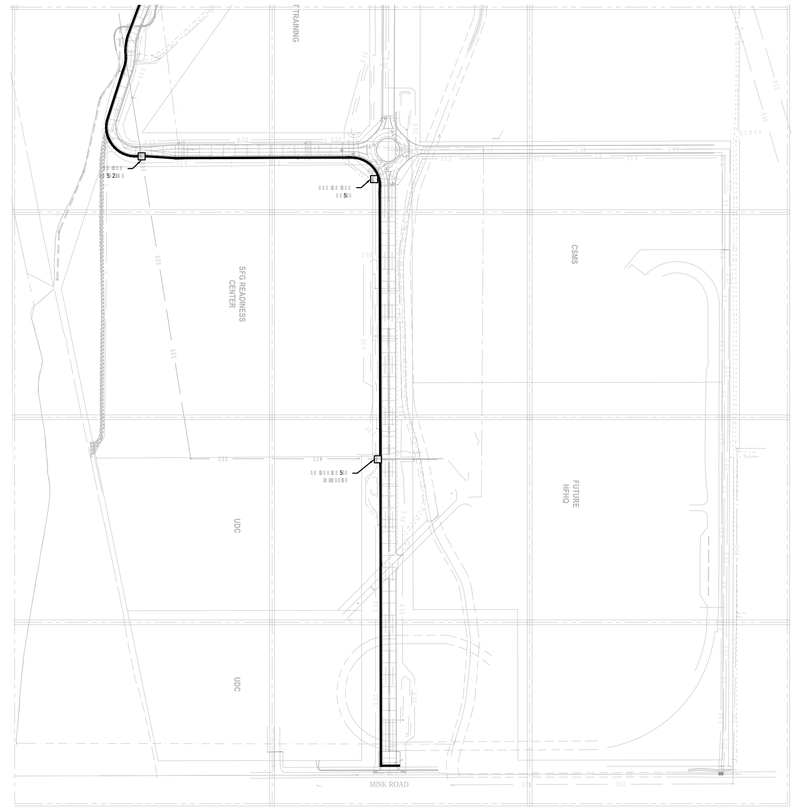

2 ES101 LOWER GARRISON ELECTRICAL SITE PLAN

SCALE: 1" = 300'-0"

EFT ARCHITECTS
265 EAST 100 SOUTH SUITE 250
SALT LAKE CITY, UTAH 84111-1604
801.521.8564 WWW.EFTARCH.COM

PROFESSIONAL STAMP

DFCM
4110 STATE OFFICE BUILDING
SALT LAKE CITY, UTAH 84114
PHONE: 801.538.3018

CODE OFFICIAL STAMP

DRAWINGS ARE IN COMPLIANCE WITH DFCM STANDARDS

CAMP WILLIAMS

UTAH NATIONAL GUARD

ISSUE DESCRIPTION	DATE
.	.

ISSUED DATE 06.02.14	PLOTTED DATE 5.29.2014
EFT PROJECT NO. 13013	DFCM PROJECT NO. 13240480
DRAWN BY SW	CHECKED BY LW

SHEET TITLE

UPPER AND LOWER ELECTRICAL SITE PLAN

SHEET NUMBER

ES101

Ken Garner Engineering, Inc.
ELECTRICAL CONSULTING ENGINEERS

80% CD SET

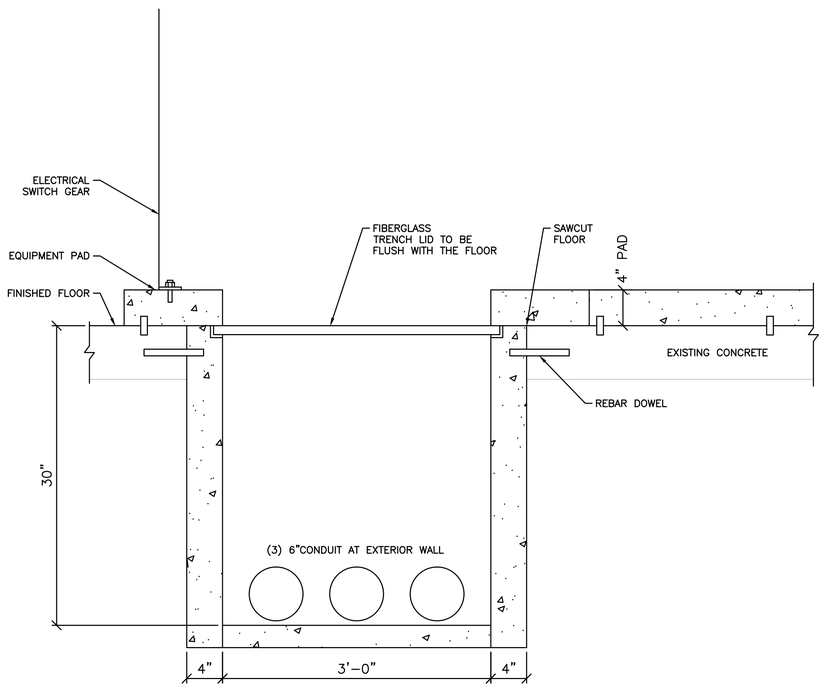

1 EP601 EQUIPMENT BUILDING NEW TRENCH DETAIL

SCALE: NTS

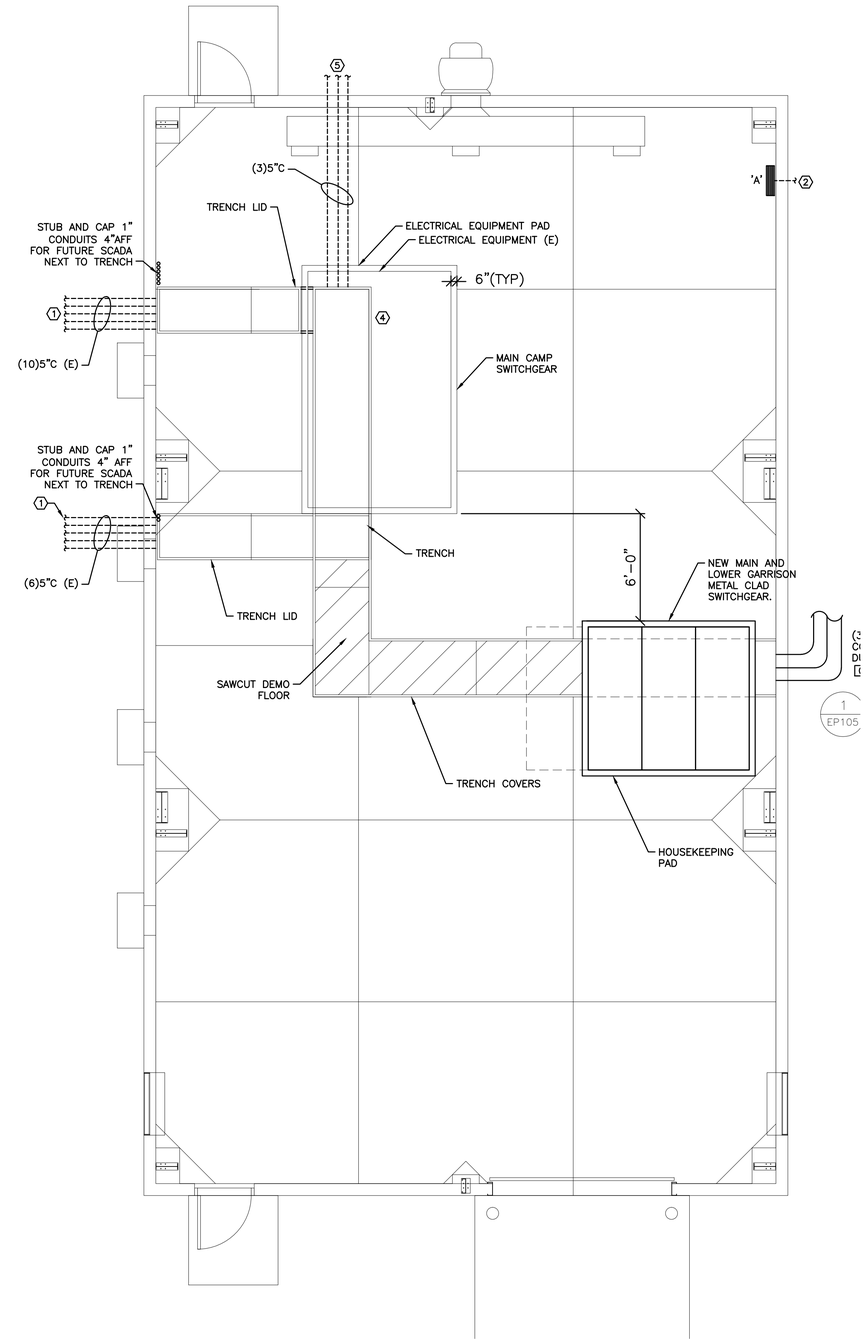

2 EP601 EQUIPMENT BUILDING TRENCH/CONDUIT LAYOUT

SCALE: 1/4" = 1'-0"

N

EFT ARCHITECTS
265 EAST 100 SOUTH SUITE 250
SALT LAKE CITY, UTAH 84111-1604
801.521.8564 WWW.EFTARCH.COM

PROFESSIONAL STAMP

DFCM
4110 STATE OFFICE BUILDING
SALT LAKE CITY, UTAH 84114
PHONE: 801.538.3018

CODE OFFICIAL STAMP

DRAWINGS ARE IN COMPLIANCE WITH DFCM STANDARDS

CAMP WILLIAMS

UTAH NATIONAL GUARD

ISSUE DESCRIPTION	DATE
.	.

ISSUED DATE 09.25.13	PLOTTED DATE 5.9.2014
EFT PROJECT NO. 13013	DFCM PROJECT NO. 13240480
DRAWN BY SW	CHECKED BY LW

SHEET TITLE

SHEET NUMBER

EP601

Ken Garner Engineering, Inc.
ELECTRICAL CONSULTING ENGINEERS

70% CD SET

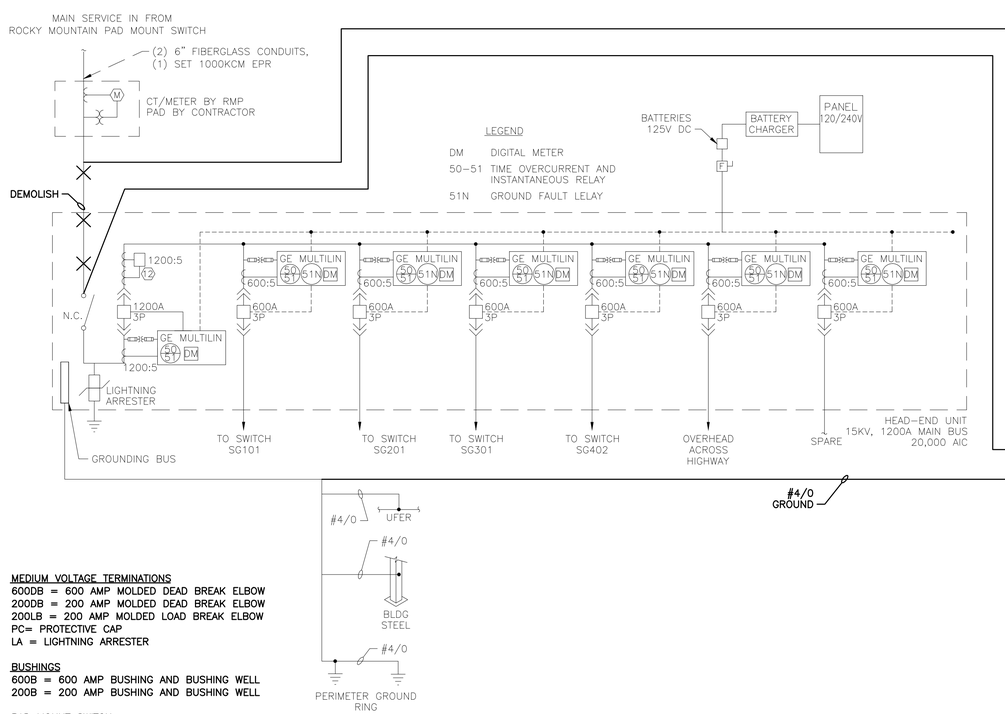

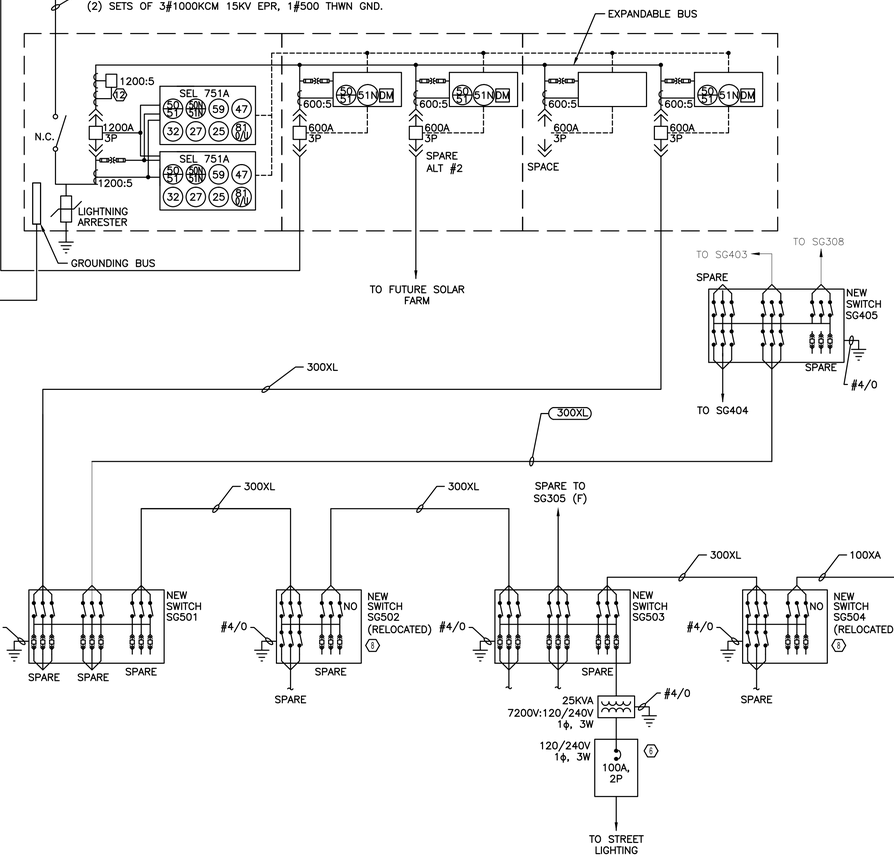

KEYED NOTES - SHEET EX101

1. UFER OF CONCRETE ENCASED ELECTRODE SHALL BE #4/0 COPPER PLACED WITHIN 2.5–3.5 INCHES OF BOTTOM OF EXTERIOR WALL FOOTING.
2. CLAMP TO BUILDING STRUCTURAL STEEL PER NEC 250.52 (A) (2) WHERE AVAILABLE FOR INSPECTION.
3. (2)10' LONG, 5/8 INCH DIAMETER COPPER ROD BENEATH PANEL BURIED 24 INCH BELOW GRADE TO TOP OF ROD. CADWELD CONNECTION TO CONDUCTOR LEAVING 6' SLACK IN CONDUCTOR BETWEEN RODS.
4. IMPLEMENT THE FOLLOWING GROUNDING METHODS:
   A. PROVIDE (2) 10' LONG, 5/8 INCH DIAMETER COPPER GROUNDING RODS BURIED 24 INCH BELOW GRADE TO TOP OF ROD. SEE NEC 250.52 (A) (5)
   B. CLAMP TO BUILDING STRUCTURAL STEEL (WHERE ACCESS IS REASONABLE) PER NEC 250.52 (A) (2)
   C. CLAMP TO WATER MAIN IF AVAILABLE. SEE NEC 250.52 (A) (1)
5. PROVIDE ENGRAVED LABEL STATING WHAT EACH BREAKER CONTROLS.
6. PROVIDE PANEL WITH INTEGRAL TVSS
7. PROVIDE NEMA 3R ENCLOSURE FOR TVSS
8. USE OLD 4–WAY SWITCH SG405 FOR NEW SWITCH SHOWN.
9. DO NOT BOND THE NEUTRAL AND GROUND BUS AT THIS PANEL/DISCONNECT.
10. MULTI FUNCTION METER AND RELAY. GE MULTILIN RELAY AND GE MULTILIN METER OR EQUAL. SEE SPECIFICATIONS FOR MORE DETAIL.
11. PROVIDE (3) 100A FUSES TEMPORARILY. FUSES TO BE REPLACED IN A FUTURE PHASE CONSTRUCTION.
12. PROVIDE (1) 5/8" X 10' GROUND ROD BURIED 24" BELOW GRADE FOR DISCONNECT.
13. CONDUIT STUB FOR FUTURE ELECTRICAL BUILDING TIE–IN.

MEDIUM VOLTAGE TERMINATIONS
600DB = 600 AMP MOLDED DEAD BREAK ELBOW
200DB = 200 AMP MOLDED DEAD BREAK ELBOW
200LB = 200 AMP MOLDED LOAD BREAK ELBOW
PC= PROTECTIVE CAP
LA = LIGHTNING ARRESTER

BUSHINGS
600B = 600 AMP BUSHING AND BUSHING WELL
200B = 200 AMP BUSHING AND BUSHING WELL

PAD MOUNT SWITCH

	WAY	1			2			3			4			5			6		
	PHASE	A	B	C	A	B	C	A	B	C	A	B	C	A	B	C	A	B	C
SG501	BUSHINGS	600B	600B	600B	600B	600B	600B	200B	200B	200B	200B	200B	200B	200B	200B	200B	–	–	–
	TERMINATIONS	600DB	600DB	600DB	600DB	600DB	600DB	200LB	PC	PC	200LB	200LB	200LB	200LB	200LB	200LB	–	–	–
SG502	BUSHINGS	600B	600B	600B	600B	600B	600B	*600B	*600B	*600B	200B	200B	200B	200B	200B	200B	200B	200B	200B
	TERMINATIONS	600DB	600DB	600DB	600DB	600DB	600DB	200DB	200DB	200DB	200LB	200LB	200LB	200LB	200LB	200LB	PC	PC	PC
SG503	BUSHINGS	600B	600B	600B	600B	600B	600B	200B	200B	200B	200B	200B	200B	200B	200B	200B	–	–	–
	TERMINATIONS	600DB	600DB	600DB	600DB	600DB	600DB	200LB	200LB	200LB	200LB	200LB	200LB	PC	PC	PC	–	–	–
SG504	BUSHINGS	600B	600B	600B	*600B	*600B	*600B	600B	600B	600B	200B	200B	200B	200B	200B	200B	200B	200B	200B
	TERMINATIONS	600DB	600DB	600DB	200DB	200DB	200DB	600DB	600DB	600DB	200LB	200LB	200LB	200LB	200LB	200LB	PC	PC	PC

TRANSFORMER (TYP)

BUSHINGS 1	200B	200B	200B
TERMINATION 1	200DB	200DB	200DB
BUSHINGS 2	200B	200B	200B
TERMINATION 2	LA	LA	LA

* 600A BUSHING WELL IS NEEDED FOR FUTURE WORK. TEMPORARY FEED NEEDS ONLY A 200A LOAD BREAD ELBOW FOR THIS PHASE. USE A LRTP TAP REDUCING PLUG OR A COOPER BT–TAP CONNECTOR (OR OTHER MANUFACTURER EQUAL.)

2 / EX101 MEDIUM VOLTAGE TERMINATION SCHEDULE
SCALE: NTS

1 / EX101 ONE-LINE DIAGRAM PHASE 2
SCALE: NTS

SYMBOL CONDUIT & WIRE SIZE

20A	0.75"C 3#12
20B	0.75"C 4#12
20C	0.75"C 3#12, 1#12 GRD
20D	0.75"C 4#12, 1#12 GRD
20E	0.75"C 4#12, 1#12 GRD, 1#12 ISOLATED GRD
30A	0.75"C 3#10
30B	0.75"C 4#10
30C	0.75"C 3#10, 1#10 GRD
30D	0.75"C 4#10, 1#10 GRD
30E	0.75"C 4#10, 1#10 GRD, 1#10 ISOLATED GRD
40A	0.75"C 3#8
40B	0.75"C 4#8
40C	0.75"C 3#8, 1#10 GRD
40D	0.75"C 4#8, 1#10 GRD
40E	0.75"C 4#8, 1#10 GRD, 1#10 ISOLATED GRD
60A	0.75"C 3#6
60B	0.75"C 4#6
60C	0.75"C 3#6, 1#10 GRD
60D	1"C 4#6, 1#10 GRD
60E	1"C 4#6, 1#10 GRD, 1#10 ISOLATED GRD
70A	1"C 3#4
70B	1"C 4#4
70C	1"C 3#4, 1#8 GRD
70D	1.25"C 4#4, 1#8 GRD
70E	1.25"C 4#4, 1#8 GRD, 1#8 ISOLATED GRD
80A	1"C 3#3
80B	1.25"C 4#3
80C	1.25"C 3#3, 1#8 GRD
80D	1.25"C 4#3, 1#8 GRD
80E	1.25"C 4#3, 1#8 GRD, 1#8 ISOLATED GRD
100A	1"C 3#2
100B	1.25"C 4#2
100C	1.25"C 3#2, 1#8 GRD
100D	1.25"C 4#2, 1#8 GRD
100E	1.25"C 4#2, 1#8 GRD, 1#8 ISOLATED GRD
125A	1.25"C 3#1
125B	1.5"C 4#1
125C	1.5"C 3#1, 1#6 GRD
125D	2"C 4#1, 1#6 GRD
125E	2"C 4#1, 1#6 GRD, 1#6 ISOLATED GRD
150A	1.5C" 3#1/0
150B	2"C 4#1/0
150C	2"C 3#1/0, 1#6 GRD
150D	2"C 4#1/0, 1#6 GRD
150E	2"C 4#1/0, 1#6 GRD, 1#6 ISOLATED GRD
175A	1.5"C 3#2/0
175B	2"C 4#2/0
175C	2"C 3#2/0, 1#6 GRD
175D	2"C 4#2/0, 1#6 GRD
175E	2"C 4#2/0, 1#6 GRD, 1#6 ISOLATED GRD
200A	2"C 3#3/0
200B	2"C 4#3/0
200C	2"C 3#3/0, 1#6 GRD
200D	2.5"C 4#3/0, 1#6 GRD
200E	2.5"C 4#3/0, 1#6 GRD, 1#6 ISOLATED GRD
225A	2"C 3#4/0
225B	2.5"C 4#4/0
225C	2.5"C 3#4/0, 1#4 GRD
225D	2.5"C 4#4/0, 1#4 GRD
225E	2.5"C 4#4/0, 1#4 GRD, 1#4 ISOLATED GRD
250A	2.5"C 3#250KCM
250B	2.5"C 4#250KCM
250C	2.5"C 3#250KCM, 1#4 GRD
250D	3"C 4#250KCM, 1#4 GRD
250E	3"C 4#250KCM, 1#4 GRD, 1#4 ISOLATED GRD

Relay Setting Table

Circuit	Model	CT Ratio	51P PHASE 0.4 TO 12 (by 0.1)	51P PH. TIME DELAY 1 TO 10 (by 0.1)	50P PH. IOC 0.5 TO 40 (by .1x)	50P IOC TIME DEL 1 TO 10 (by 0.1)	CURVE
FEEDER FROM RMP	SEL 351A	1200:5	–	–	–	–	extreme inverse
FEEDER TO EXISTING MAIN	SEL 351A	1200:5	–	–	–	–	extreme inverse
FEEDER TO LOWER GARRISON	SEL 351A	600:5	–	–	–	–	extreme inverse
SPARE CIRCUIT BREAKER	SEL 351A	600:5	–	–	–	–	extreme inverse

Circuit	Model	CT Ratio	51N GROUND 0.4 TO 12 (by 0.1)	51N GD TIME DELAY 1 TO 10 (by 0.1)	50N GND IOC 0.5 TO 40 (by .1x)	50N IOC TIME DEL 1 TO 10 (by 0.1)	CURVE
FEEDER FROM RMP	SEL 351A	50:5	–	–	–	–	extreme inverse
FEEDER TO EXISTING MAIN	SEL 351A	50:5	–	–	–	–	extreme inverse
FEEDER TO LOWER GARRISON	SEL 351A	50:5	–	–	–	–	extreme inverse

EFT ARCHITECTS
265 EAST 100 SOUTH SUITE 250
SALT LAKE CITY, UTAH 84111-1604
801.521.8564 WWW.EFTARCH.COM

PROFESSIONAL STAMP

DFCM
4110 STATE OFFICE BUILDING
SALT LAKE CITY, UTAH 84114
PHONE: 801.538.3018

CODE OFFICIAL STAMP

DRAWINGS ARE IN COMPLIANCE WITH DFCM STANDARDS

CAMP WILLIAMS

ISSUE DESCRIPTION	DATE
.	.

ISSUED DATE 09.25.13	PLOTTED DATE 5.9.2014
EFT PROJECT NO. 13013	DFCM PROJECT NO. 13240480
DRAWN BY SW	CHECKED BY LW

SHEET TITLE
M
2

Ken Garner Engineering, Inc.
ELECTRICAL CONSULTING ENGINEERS

70% CD SET

SHEET NUMBER
EX101