OWNER:

Utah State DFCM
4110 State Office Building
Salt Lake City, UT 84114

Contact: Tim Parkinson, Project Manager
Telephone: 801.538.3018

OWNER:

Weber State University
2540 Washington Blvd.
Ogden, UT 84401

Contact: Travis Hogge, Project Manager
Telephone: 801.626.7311

ARCHITECT:

Sanders Associates Architects
2668 Grant Ave. Suite 100
Ogden, UT 84401

Contact: M. Shane Sanders, AIA
Telephone: 801.621.7303

MECHANICAL:

WHW
8619 Sandy Parkway #101
Sandy, UT 84070

Contact: Win Packer, PE
Telephone: 801.466.4021

ELECTRICAL:

ECE
939 South West Temple
Salt Lake City, UT 84101

Contact: Akbar Matinkhah, PE
Telephone: 801.521.8007

FIRE PROTECTION:

Protection Consultants, Inc.
1199 South Main Street #101
Centerville, UT 84014

Contact: Greg Jones, PE
Telephone: 801.295.6070

COST ESTIMATING:

Constrution Control Corporation
307 West 200 South #4006
Salt Lake City, UT 84101

Contact: Kenneth Ament
Telephone: 801.578.1201

WEBER STATE UNIVERSITY
MILLER ADMINISTRATION
MEP Upgrades and Remodel

DFCM PROJECT NUMBER: 14031810

State of Utah- Department of Administrative Services

DIVISION OF FACILITIES CONSTRUCTION AND MANAGEMENT
4110 State Office Building/Salt Lake City, Utah 84414/538-3018

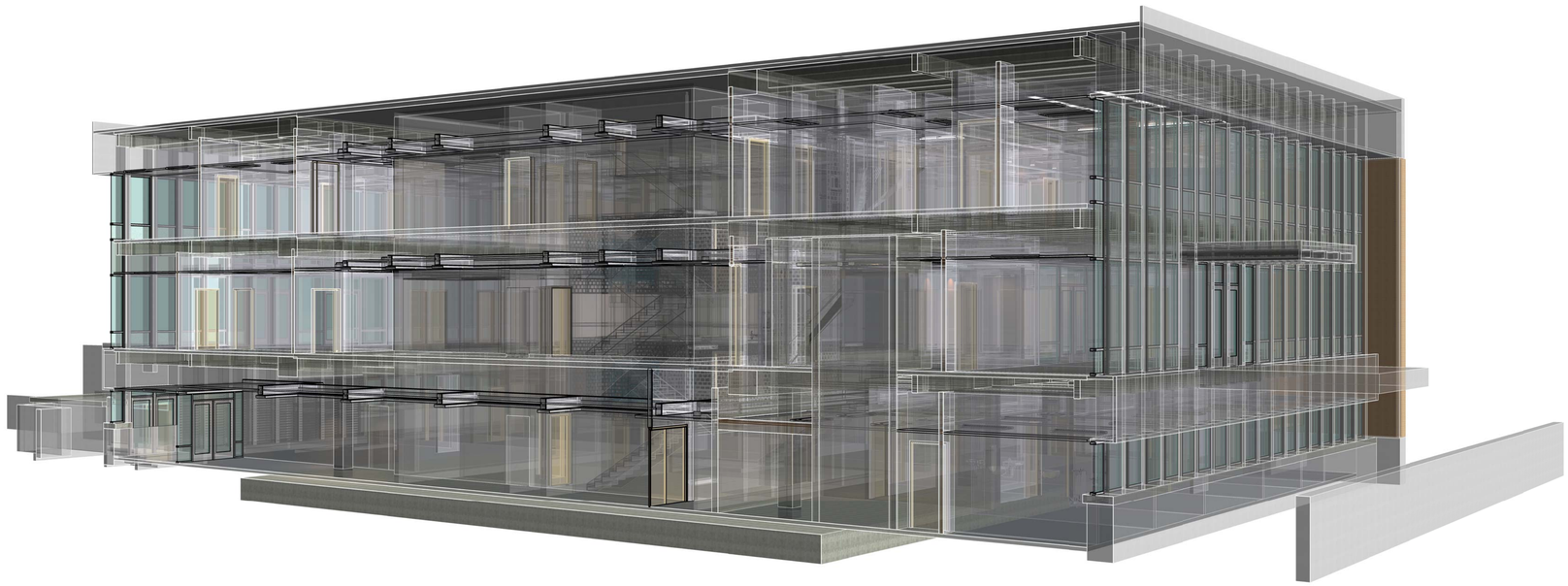

DFCM approval

SANDERS ASSOCIATES ARCHITECTS
2668 Grant Avenue
Ogden, UT 84401
t: 801.621.7303
www.sandersarch.com

Seal

REGISTERED PROFESSIONAL ARCHITECT
M. SHANE SANDERS
5526553-0301
UTAH

Consultant

Project Name

WSU- MILLER ADMINISTRATION
MEP Upgrades and Remodel
3848 HARRISON BLVD.
OGDEN, UTAH 84401

Issued

No.	Date	Description
1	01.16.15	DFCM PLAN REVIEW
2	02.03.15	BID DOCUMENTS

Revision

No.	Date	Description

DFCM Project No. 14031810
SAA Project No. 214016

Drawing Title

COVER SHEET

Sheet Number

G1001

CODE ANALYSIS

APPLICABLE CODES

	Year		Year
International Building Code	2012	National Electrical Code	2011
International Mechanical Code	2012	Uniform Code for Building Conservation	2012
International Fuel Gas Code	2012	ADA Accessibility Guidelines	2009 ansi A117.1 2010 ADA standards for accessible design
International Plumbing Code	2012		
International Fire Code	2012		
International Energy Conservation Code	2012		

A. Occupancy and Group: Existing Building B _____ _____ _____

Change in Use: Yes _____ No X Mixed Occupancy: Yes _____ No X

Special Use and Occupancy (e.g. High Rise, Covered Mall): -

B. Seismic Design Category: (N/A) Design Wind Speed: 120 mph

Occupancy Category (Table 1604.5): II

C. Type of Construction (circle one):

I	I	II	II	III	III	IV	V	V
A	B	A	B	A	B	HT	A	B

D. Fire Resistance Rating Requirements for the Exterior Walls based on the fire separation distance (in hours):

North: 0 South: 0 East: 0 West: 0

E. Mixed Occupancies: (N/A) Nonseparated Uses: (N/A)

F: Sprinklers:

Required: Yes Provided: (NEW)

Type of Sprinkler System (IBC 903.3.1) NFPA 13

G: Number of Stories: 3 Building Height: 41'

H: Actual Area per Floor :

Level 3 Area	(square feet):	15,218
Level 2 Area	(square feet):	15,218
Level 1 Area	(square feet):	15,218
Total Area	(square feet):	45,564

I: Tabular Area: (table 503): 19,000

J: Area Modifications: (N/A)

a) $A_a = A_t + \left[\frac{A_1 I_1}{100}\right] + \left[\frac{A_2 I_2}{100}\right]$ $\quad I_f = 100\left[\frac{F}{P} - 0.25\right]\frac{W}{30}$

b) Sum of the Ratio Calculations for Mixed Occupancies: (N/A)

$\frac{\text{Actual Area}}{\text{Allowable Area}} \leq 1$

c) Total Allowable Area for:
1) One Story: N/A
2) Two Story: $A_a(2)$ N/A
3) Three Story: $A_a(3)$ N/A

d) Unlimited Area Building: Yes _____ No X Code Section: 507

K. Fire Resistance Rating Requirements for Building Elements (hours).

Element	Hours	Assembly Listing	Element	Hours	Assembly Listing
Exterior Bearing Walls	2	(Existing)	Floors - Ceiling Floors	0	(Existing)
Interior Bearing Walls	0	(Existing)	Roofs - Ceiling Roofs	0	(Existing)
Exterior Non-Bearing Walls	0	(Existing)	Exterior Doors and Windows	0	(Existing)
Structural Frame	0	(Existing)	Shaft Enclosures	1	(Existing)
Partitions - Permanent	0	(Existing)	Fire Walls	N/A	
Fire Barriers	N/A		Fire Partitions	N/A	
			Smoke Partitions	N/A	

L. Design Occupant Load: 396

Exit Width Required: 14.4" Exit Width Provided: 72"

M. Minimum Number of Required Plumbing Facilities: (334 Occ. with conf. & board room)

a) Water Closets - Required (m) 3 (f) 5 Provided (m) 5 (f) 7
b) Urinals - Required (m) 2 (f) N/A Provided (m) 2 (f) N/A
c) Lavatories - Required (m) 4 (f) 4 Provided (m) 5 (f) 5
d) Bath Tubs or Showers: -
e) Drinking Fountains: 1 std. 1 ADA) Service Sinks: 3

FOOTNOTES:

1) In case of conflict with the U.S. Department of Justice Federal Registers Parts through "I" - ADA Guidelines and specific reference to the International Building Code Accessibility Chapters, the more restrictive requirement shall govern.

2) Additional Code Information shall be provided at the discretion of the Building Official for Complex Buildings. Including, but not limited to:
a) High Rise Requirements.
b) Atriums.
c) Performance Based Criteria.
d) Means or Egress Analysis.
e) Fire Assembly Locator Sheet.
f) Exterior and Interior Accessibility Route.
g) Fire Stopping, Including Tested Design Number.

The existing One Hour Fire-Rated Vertical Shaft Enclosure is required to be maintained at the Mechanical 104C, 212C and 314C. All existing and new pentrations at walls shall be fire sealed. All existing openings that mechanical equipment is removed shall be infilled with a One Hour Fire-Rated Wall Assembly. All new door openings are to be provided with a One Hour Fire-Rated Door Assembly. Refer to drawings AE661, AE662 and AE663 for UL Fire-Rated Partitions and Penetration Firestop Systems.

A new One Hour Fire-Rated Exit Passageway required at Level One extending from the existing west stair to the north exterior exit. All existing and new pentrations at walls shall be fire sealed. All door openings in any of the walls of the passagway shall be a One Hour Fire-Rated Wall Assembly. Refer to drawings AE661, AE662 and AE663 for UL Fire-Rated Partitions and Penetration Firestop Systems.

WSU CAMPUS

Weber State University
Miller Administration Building
3848 Harrison Blvd.
Ogden, Utah 84401

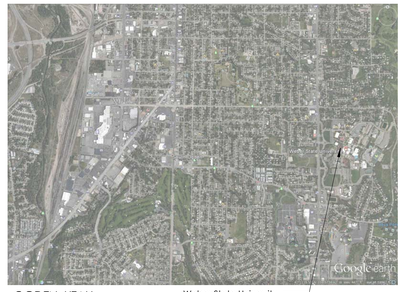

OGDEN, UTAH

Weber State University
Miller Administration Building
3848 Harrison Blvd.
Ogden, Utah 84401

Vicinity Map

3/16" = 1'-0"

General Symbols

BREAK LINE

BUILDING SECTION — SIM 1 A101 — SHEET WHERE DRAWN

CEILING TAG — A410 - 88

WALL SECTION — SIM 1 A101 — SHEET WHERE DRAWN

VERTICAL ELEVATION — Name / Elevation

DETAIL — SIM 1 A101 — SHEET WHERE DRAWN

NORTH ARROW

CALLOUT — SIM 1 A101 — SHEET WHERE DRAWN

DRAWING REVISION REVISION NUMBER — 1

ELEVATION — 1 AE000 1 — SHEET WHERE DRAWN

ROOM NAME — Room name

ROOM NUMBER — 888

ROOM AREA

DOOR NUMBER — 100

WINDOW NUMBER — W1

KEYED NOTES — 1

PARTITION TYPE — XX

Materials

CONCRETE, EIFS, STEEL, MASONRY BRICK, GYPSUM BOARD, BLOCKING, EARTH

GRAVEL, INSULATION RIGID, STONE, MASONRY CONCRETE BLOCK, FINISH WOOD, BATT INSULATION, PRECAST

ABBREVIATIONS

#	NUMBER	DWGS.	DRAWINGS	I.D.	INSIDE DIAMETER	REINF.	REINFORCED
@	AT	EA.	EACH	I.F.	INSIDE FACE	REQ'D	REQUIRED
℄	CENTER LINE	E.F.	EACH FACE	IN.	INCHES	RM.	ROOM
∅	DIAMETER	E.J.	EXPANSION JOINT	INFO.	INFORMATION	R.O.	ROUGH OPENING
L	ANGLE	EL.	ELEVATION	INSUL.	INSULATION	SCHED.	SCHEDULE
A.B.	ANCHOR BOLT	ELEV.	ELEVATION	LAV.	LAVATORY	SHR.	SHOWER
ABV.	ABOVE	EQ.	EQUAL	LT.	LIGHT	SHT.	SHEET
ADJ.	ADJUSTABLE	E.S.	EACH SIDE	LT. WT.	LIGHT WEIGHT	SIM.	SIMILAR
A.F.F.	ABOVE FINISH FLOOR	E.W.	EACH WAY	MAINT.	MAINTENANCE	SPEC.	SPECIFICATION
ALUM.	ALUMINUM	EXIST.	EXISTING	MANUF.	MANUFACTURER	STC	SOUND TRANSMISSION COEFFICIENT
APPROX.	APPROXIMATE	EXPAN.	EXPANSION	MAX.	MAXIMUM		
ARCH.	ARCHITECTURAL	EXT.	EXTERIOR	MAT.	MATERIAL	STD.	STANDARD
A.S.T.M.	AMERICAN SOCIETY FOR TESTING MATERIALS	F.D.	FLOOR DRAIN	M.C.J.	MASONRY CONTROL JOINT	STIFF.	STIFFENER
		FDN.	FOUNDATION	MECH.	MECHANICAL	STR.	STRUCTURAL
D.B.A.	DEFORMED BAR ANCHOR	F.E.	FIRE EXTINGUISHER	MFR.	MANUFACTURER	SUPER.	SUPERVISOR
BD.	BOARD	F.E.C.	FIRE EXTINGUISHER CABINET	MIN.	MINIMUM	SUSP.	SUSPENDED
BLDG.	BUILDING	F.F.	FINISH FLOOR	MISC.	MISCELLANEOUS	THRU	THROUGH
B.M.	BENCHMARK	FIN.	FINISH	M.O.	MASONRY OPENING	T.O.	TOP OF
B.O.	BOTTOM OF	FLR.	FLOOR	MTL.	METAL	T.O.A.	TOP OF ASPHALT
BOT.	BOTTOM	FT.	FEET	N.I.C.	NOT IN CONTRACT	T.O.C.	TOP OF CURB
B.P.	BASE PLATE	FTG.	FOOTING	NO.	NUMBER	T.O.F.	TOP OF FOOTING
BRG.	BEARING	GA.	GAGE/GAUGE	N.T.S.	NOT TO SCALE	T.O.S.	TOP OF SLAB
BTWN.	BETWEEN	GAL.	GALLON	O.C.	ON CENTER		OR SIDEWALK
CER.	CERAMIC	GALV.	GALVANIZED	O.D.	OUTSIDE DIAMETER	T.O.W.	TOP OF WALL
C.J.	CONSTRUCTION JOINT	GND.	GROUND	O.F.	OUTSIDE FACE	TYP.	TYPICAL
CLG.	CEILING	GWB.	GYPSUM WALL BOARD	O.H.	OVERHEAD	U.N.O.	UNLESS NOTED OTHERWISE
CLR.	CLEAR	GYP. BD.	GYPSUM WALL BOARD	OHD	OVERHEAD DOOR		
CMU	CONCRETE MASONRY UNIT	HC.	HANDICAPPED	OPP.	OPPOSITE	VCT	VINYL COMPOSITION TILE
COL.	COLUMN	HDW.	HARDWARE	PART.	PARTITION		
CONC.	CONCRETE	H.M.	HOLLOW METAL	PL.	PLATE	VERT.	VERTICAL
CONT.	CONTINUOUS	HORIZ.	HORIZONTAL	PNTD.	PAINTED	VEST.	VESTIBULE
CONST.	CONSTRUCTION	HR.	HOUR	PROT.	PROTECTION	VNR.	VENEER
COORD.	COORDINATE	H.S.A.	HEADED STUD ANCHOR	P.S.F.	POUNDS PER SQUARE FOOT	W/	WITH
DBL.	DOUBLE	HT.	HEIGHT	P.S.I.	POUNDS PER SQUARE INCH	WD.	WOOD
DEPT	DEPARTMENT	HVAC	HEATING/VENTILATION/ AIR CONDITIONING	QTY.	QUANTITY	W.W.F.	WELDED WIRE FABRIC
DIA.	DIAMETER			R.D.	ROOF DRAIN		
DTL.	DETAIL	HYD	HYDRANT	RAD.	RADIUS		

MISCELLANEOUS GENERAL NOTES

1. THE PROJECT MANUAL, UNDER SEPARATE COVER, IS AN INTEGRAL PART OF THESE CONSTRUCTION DRAWINGS.
2. ALL WORK, MATERIALS, AND METHODS SHALL BE IN CONFORMANCE WITH THE CODES, ORDINANCES AND REGULATIONS OF ALL GOVERNMENTAL AGENCIES HAVING JURISDICTION AT THE PROJECT LOCATION.
3. CONTRACTORS ARE RESPONSIBLE FOR ALL WORK REGARDLESS OF THE LOCATION OF THE INFORMATION ON THE DOCUMENTS.
4. KEEP SITE CLEAN AND CLEAR OF DEBRIS AND IN ORDERLY CONDITION THAT DOES NOT DETRACT FROM THE SURROUNDING SITE AND REPAIR ANY DAMAGE CAUSED BY WORK OF THE CONTRACT.
5. DISCREPANCIES BETWEEN ACTUAL CONDITIONS AND PLANS SHALL BE BROUGHT TO THE ATTENTION OF THE ARCHITECT. CONTRACTOR SHALL SUBMIT SPECIFIC DISCREPANCIES FOR ARCHITECT REVIEW.
6. COORDINATE WITH ALL TRADES, SIZES AND LOCATIONS OF ALL OPENINGS FOR MECHANICAL, PLUMBING AND ELECTRICAL EQUIPMENT, EQUIPMENT PADS OR BASES, AS WELL AS ELECTRIC POWER, WATER, AND DRAIN INSTALLATIONS, BEFORE PROCEEDING WITH WORK. CONTRACTOR SHALL PROVIDE COORDINATION DRAWINGS FOR PROPER PLACEMENT OF ALL TRADES' WORK, ANY CONCERNS, SPACE LIMITATIONS OR STRUCTURAL CONFLICTS, SHALL BE BROUGHT TO THE ATTENTION OF THE ARCHITECT. A REASONABLE RESPONSE TIME SHALL BE ALLOWED AS NOTED IN THE SPECIFICATIONS.
7. THE DRAWINGS AND SPECIFICATIONS DO NOT NECESSARILY INDICATE OR DESCRIBE ALL WORK REQUIRED FOR THE FULL PERFORMANCE AND COMPLETION OF THE WORK. CONTRACTS SHALL BE LET ON THE BASIS OF SUCH DOCUMENTS, WITH THE UNDERSTANDING THAT THE CONTRACTOR IS TO FURNISH ALL ITEMS REQUIRED FOR PROPER COMPLETION OF THE WORK WITH OUT ADJUSTMENT TO CONTRACT PRICE. IT IS INTENDED THAT THE WORK TO BE OF SOUND AND QUALITY CONSTRUCTION AND THE CONTRACTOR SHALL BE SOLELY RESPONSIBLE FOR THE INCLUSION OF ADEQUATE AMOUNTS TO COVER INSTALLATION OF ALL ITEMS INDICATED, DESCRIBED OR REASONABLY IMPLIED.
8. PROVIDE FULL METAL BACKING PLATE (16 GAUGE X 6" HIGH SECURED TO 3 STUDS MIN.) OR WOOD BLOCKING AS REQUIRED TO SECURELY ANCHOR ALL WALL MOUNTED EQUIPMENT (CABINETS, TOILET ROOM ACCESSORIES, HARDWARE, ETC.). BLOCKING SHALL PROVIDE A RIGID CONNECTION CAPABLE OF SUPPORTING DESIGN LOADS. PROVIDE A 16 GAUGE X 6" STL. STUD/TRACK SECURED TO 2 STUDS TO SECURELY SUPPORT ALL WALL STOPS (DOOR BUMPER).

DRAWING INDEX

GENERAL INFORMATION

GI001	COVER SHEET
GI002	CODE ANALYSIS & GENERAL INFORMATION
GI003	SPECIAL INSPECTIONS
GI004	SPECIAL INSPECTIONS

CIVIL

CS100	SITE PLAN

ARCHITECTURAL

AD100	LEVEL ONE DEMOLITION PLAN
AD101	LEVEL TWO DEMOLITION PLAN
AD102	LEVEL THREE DEMOLITION PLAN
AD110	LEVEL ONE REFLECTED CEILING DEMOLITION PLAN
AD111	LEVEL TWO REFLECTED CEILING DEMOLITION PLAN
AD112	LEVEL THREE REFLECTED CEILING DEMOLITION PLAN
AE100	LEVEL ONE FLOOR PLAN
AE101	LEVEL TWO FLOOR PLAN
AE102	LEVEL THREE FLOOR PLAN
AE120	LEVEL 1 REFLECTED CEILING PLAN
AE121	LEVEL 2 REFLECTED CEILING PLAN
AE122	LEVEL 3 REFLECTED CEILING PLAN
AE161	LEVEL ONE FINISH FLOOR PLAN
AE162	LEVEL TWO FINISH FLOOR PLAN
AE163	LEVEL THREE FINISH FLOOR PLAN
AE200	EXTERIOR ELEVATIONS
AE201	EXTERIOR ELEVATIONS
AE300	WALL SECTIONS
AE301	WALL SECTIONS
AE400	ENLARGED REST ROOM PLAN
AE401	INTERIOR ELEVATIONS
AE402	INTERIOR ELEVATIONS AND DETAILS
AE541	CEILING DETAILS
AE542	CEILING DETAILS
AE581	CURTAINWALL DETAILS
AE582	STOREFRONT DETAILS
AE583	STOREFRONT & HOLLOW METAL DETAILS
AE621	DOOR SCHEDULE & FRAME TYPES
AE661	UL FIRE-RATED PARTITION ASSEMBLIES
AE662	UL FIRE-RATED PENETRATION FIRESTOP SYSTEMS
AE663	UL FIRE-RATED PENETRATION FIRESTOP SYSTEMS
AE700	SIGNS

MECHANICAL

MG001	MECHANICAL LEGEND AND GENERAL NOTES
MS101	MECHANICAL SITE PLAN
MD101	MECHANICAL LEVEL 1 DEMO PLAN
MD102	MECHANICAL LEVEL 2 DEMO PLAN
MD103	MECHANICAL LEVEL 3 DEMO PLAN
ME101	MECHANICAL LEVEL 1 PLAN
ME102	MECHANICAL LEVEL 2 PLAN
ME103	MECHANICAL LEVEL 3 PLAN
ME104	MECHANICAL PIPING LEVEL 1 PLAN
ME105	MECHANICAL PIPING LEVEL 2 PLAN
ME106	MECHANICAL PIPING LEVEL 3 PLAN
ME107	MECHANICAL ROOF PLAN
ME301	MECHANICAL SECTIONS
ME401	MECHANICAL ROOM PLANS
ME501	MECHANICAL DETAILS
ME502	MECHANICAL DETAILS
ME503	MECHANICAL DETAILS
ME601	MECHANICAL SCHEDULES
ME602	MECHANICAL SCHEDULES
ME603	MECHANICAL SCHEDULES
ME901	MECHANICAL HYDRONIC SCHEMATIC
ME902	MECHANICAL VRF SCHEMATICS
PG001	PLUMBING LEGEND AND GENERAL NOTES
PD101	PLUMBING LEVEL 1 DEMO PLAN
PD102	PLUMBING LEVEL 2 DEMO PLAN
PD103	PLUMBING LEVEL 3 DEMO PLAN
PE101	PLUMBING LEVEL 1 PLAN
PE102	PLUMBING LEVEL 2 PLAN
PE103	PLUMBING LEVEL 3 PLAN
PE401	PLUMBING LARGE SCALE RESTROOM PLANS
PE501	PLUMBING DETAILS
PE601	PLUMBING SCHEDULES

ELECTRICAL

EE001	GENERAL NOTES AND SCHEDULES
EE002	DETAILS
EE003	DETAILS
EE004	LIGHTING DETAILS
EE005	PANEL SCHEDULES
EE006	PANEL SCHEDULES
EE007	PANEL SCHEDULES
EE008	POWER SINGLE LINE DIAGRAM
EE009	FIRE ALARM RISER DIAGRAM
ED101	LEVEL 1 DEMOLITION FLOOR PLAN - POWER
ED102	LEVEL 2 DEMOLITION FLOOR PLAN - POWER
ED103	LEVEL 3 DEMOLITION FLOOR PLAN - POWER
ED201	LEVEL 1 DEMOLITION FLOOR PLAN - LIGHTING
ED202	LEVEL 2 DEMOLITION FLOOR PLAN - LIGHTING
ED203	LEVEL 3 DEMOLITION FLOOR PLAN - LIGHTING
ED301	LEVEL 1 DEMOLITION FLOOR PLAN - SYSTEMS
ED302	LEVEL 2 DEMOLITION FLOOR PLAN - SYSTEMS
ED303	LEVEL 3 DEMOLITION FLOOR PLAN - SYSTEMS
EE101	LEVEL 1 FLOOR PLAN - POWER
EE102	LEVEL 2 FLOOR PLAN - POWER
EE103	LEVEL 3 FLOOR PLAN - POWER
EE201	LEVEL 1 FLOOR PLAN - LIGHTING
EE202	LEVEL 2 FLOOR PLAN - LIGHTING
EE203	LEVEL 3 FLOOR PLAN - LIGHTING
EE301	LEVEL 1 FLOOR PLAN - SYSTEMS
EE302	LEVEL 2 FLOOR PLAN - SYSTEMS
EE303	LEVEL 3 FLOOR PLAN - SYSTEMS
EM101	LEVEL 1 FLOOR PLAN HVAC - ELECTRICAL
EM102	LEVEL 2 FLOOR PLAN HVAC - ELECTRICAL
EM103	LEVEL 3 FLOOR PLAN HVAC - ELECTRICAL

FIRE PROTECTION

FD100	FIRE PROTECTION DEMO - 1ST FLOOR
FD101	FIRE PROTECTION DEMO - 2ND FLOOR
FD102	FIRE PROTECTION DEMO - 3RD FLOOR
FP100	FIRE SPRINKLER PLAN - 1ST FLOOR
FP101	FIRE SPRINKLER PLAN - 2ND FLOOR
FP102	FIRE SPRINKLER PLAN - 3RD FLOOR
FP500	FIRE SPRINKLER NOTES, DETAILS & SCHEDULES

DESIGN CRITERIA:

1. THESE DOCUMENTS - DRAWINGS AND SPECIFICATIONS COMPLY WITH ALL THE REQUIREMENTS OF THE DFCM STANDARDS FOR UPGRADES OF EXISTING BUILDING.

CODE INSPECTION REQUIREMENTS:

1. BEFORE A FINAL ACCEPTANCE CAN BE ISSUED, THE STATE APPOINTED CODE INSPECTOR SHALL PROVIDE A FINAL REPORT RECOMMENDING THAT THE NEW WORK IS IN COMPLIANCE WITH THE DRAWINGS, SPECIFICATIONS AND APPLICABLE CODES ESPECIALLY FOR THE FOLLOWING ITEMS.
   a.) NEW FIRE RATED WALL & DOOR ASSEMBLIES
   b.) FIRE SEALING AT FIRE RATED WALLS
   c.) SEISMIC SUPPORTS - ARCHITRECTURAL, MECHANICAL AND ELECTRICAL PER DEFERRED SUBMITTALS.
2. SEE ALSO SHEET GI003 & GI004.

SPECIAL INSPECTIONS:

1. SEE SHEET GI003 & GI004.

DEFERRED SUBMITTAL LIST:

1. STRUCTURAL DESIGN AND CALCULATIONS FOR ALUMINUM FRAMED ENTRANCES & STOREFRONTS - INCLUDING NFRC DOCUMENTATION
2. STRUCTURAL DESIGN FOR GLAZED ALUMINUM CURTAINWALLS - INCLUDING NFRC DOCUMENTATION
3. STRUCTURAL SEISMIC DESIGN FOR INTERIOR NON-STRUCTURAL WALL X - BRACING
4. STRUCTURAL SEISMIC BRACING DESIGN FOR ALL PIPING 4" AND ABOVE - INTERIOR LOCATIONS.
5. FIRE SPRINKLER SYSTEM
6. FIRE ALARM SYSTEM

SUBMITTAL NOTES:
DEFERRED SUBMITTAL ENGINEERD SHALL PROVIDE A SUBMITTAL INCLUDING CALCULATIONS AND DETAILS TO THE DFCM BUILDING OFFICIALS FOR REVIEW. SEISMIC SUPPORTS SHALL BE DESIGNED TO RESIST THE EFFECTS OF EARTHQUAKE MOTIONS IN ACCORDANCE WITH ASCE 7-05. REFERENCE IBC SECTION 1613.1.

THE DATE OF DEFERRED SUBMITTALS IS APPROXIMATELY 15 DAYS AFTER NOTICE TO PROCEED. WORK CANNOT COMMENCE UNTIL THE DFCM BUILDING OFFICIALS HAVE APPROVED THE DEFERRED SUBMITTALS.

EACH DEFERRED SUBMITTAL IS REQUIRED TO HAVE THE PROJECT NAME, DFCM NUMBER, PROJECT ADDRESS, CONFORMANCE LETTER OR STAMP FROM THE DESIGNER AND A 3"X3" SPACE FOR THE APPROVAL STAMP ON THE FRONT PAGE

ADDITIVE ALTERNATES:

ADDITIVE ALTERNATE NO. 1: "WOOD DOOR REFINISHING"
1. Base Bid: All existing wood doors that, are to remain, are to be protected during demolition and construction and are to be cleaned before the completion of the project. All door frames are to be painted.
2. Additive Alternate: Sand, repair and refinish all wood doors within the building that are indication to remain. All doors that have applied signage are to be refinished so prior signage is not visible. Door refinishing is indicated in Section 099300 "Staining and Transparent Finishing."

ADDITIVE ALTERNATE NO. 2: "PROVIDE NEW CONDENSER WATER DISTRIBUTION PUMPS."
1. Base Bid: WSU will utilize the existing pumps in the Social Science building to circulate the lower campus sub-loop. Piping shall be stubbed out in the Admin Building Include the piping into the Administration building mechanical room, with stub-outs for the pumps as part of the base bid.
2. Additive Alternate: Provide the two new base mounted pumps, and associated VFDs, controls, etc. at the Admin building mechanical room as shown on the plans. Pumps shall be programmed to operate as the secondary pumping loop for the Admin building as normal operation, and as the lower campus primary circulating pumps during bypass operation.

SANDERS ASSOCIATES ARCHITECTS
2668 Grant Avenue
Ogden, UT 84401
t 801.621.7303
www.sandersarch.com

Seal

REGISTERED PROFESSIONAL ARCHITECT
M. SHANE SANDERS
5294503-0301
UTAH

Consultant

Project Name

WSU- MILLER ADMINISTRATION
MEP Upgrades and Remodel
3848 HARRISON BLVD.
OGDEN, UTAH 84401

Issued

No.	Date	Description
1	01.16.15	DFCM PLAN REVIEW
2	02.03.15	BID DOCUMENTS

Revision

No.	Date	Description

DFCM Project No. 14031810
SAA Project No. 214016

Drawing Title

CODE ANALYSIS & GENERAL INFORMATION

Sheet Number

GI002

DFCM approval

SPECIAL INSPECTION, MATERIAL TESTING & STRUCTURAL OBSERVATION ITEMS REQUIRED BY CHAPTER 17 OF THE 2012 IBC

Indicate items requiring special inspection, structural testing, or structural observations by checking the appropriate box. All items not requiring inspection/testing should be removed from the form. For items requiring continuous inspection, a special inspector must be present onsite during the performance of that task. In most cases "periodic" inspections/tests shall be performed prior to commencing the task, intermittently during the task, and at the completion of the task. The "Detailed Instructions & Frequency" provides a description of the presumed requirements for tasks requiring "periodic" inspections. The design professional in responsible should revise the requirements as needed on a project-specific basis.

FABRICATORS (IBC 1704.2.5)

☐ Approved Fabricator	Yes	No	☐ Unapproved Fabricator	Yes	No

Fabricators Name:			
Fabricators plant location			
Required In-plant Inspections	☐ Steel Construction ☐ Cold-formed Construction	☐ Concrete Construction ☐ Other: _____	☐ Wood Construction ☐ Other: _____

STRUCTURAL STEEL (IBC 1705.2.1, 1705.11.1 & 1705.12.2)

Item			Detailed Instructions and Frequencies
PRIOR TO WELDING (TABLE N5.4-1, AISC 360-10):			
Verify welding procedures (WPS) and consumable certificates	☐ Continuous	☐ Periodic	
Material identification	☐ Continuous	☐ Periodic	Verify type and grade of material.
Welder identification	☐ Continuous	☐ Periodic	A system shall be maintained by which a welder who has welded a joint or member can be identified.
Fit-up groove welds	☐ Continuous	☐ Periodic	Verify joint preparation, dimensions, cleanliness, tacking, and backing.
Access holes	☐ Continuous	☐ Periodic	Verify configuration and finish.
Fit-up of fillet welds	☐ Continuous	☐ Periodic	Verify alignment, gaps at root, cleanliness of steel surfaces, and tack weld quality and location.
DURING WELDING (TABLE N5.4-2, AISC 360-10):			
Use of qualified welders	☐ Continuous	☐ Periodic	Verify that welders are appropriately qualified.
Control and handling of welding consumables	☐ Continuous	☐ Periodic	Verify packaging and exposure control.
Cracked tack welds	☐ Continuous	☐ Periodic	Verify that welding does not occur over cracked tack welds.
Environmental conditions	☐ Continuous	☐ Periodic	Verify win speed is within limits as well as precipitation and temperature.
WPS followed	☐ Continuous	☐ Periodic	Verify items such as settings on welding equipment, travel speed, welding materials, shielding gas type/flow rate, preheat applied, interpass temperature maintained, and proper position.
Welding techniques	☐ Continuous	☐ Periodic	Verify interpass and final cleaning, each pass is within profile limitations, and quality of each pass.

AFTER WELDING (TABLE N5.4-3, AISC 360-10):			
Welds cleaned	☐ Continuous	☐ Periodic	Verify that welds have been propyl cleaned.
Size, length, and location of welds	☐ Continuous	☐ Periodic	
Welds meet visual acceptance criteria	☐ Continuous	☐ Periodic	
Arc strikes	☐ Continuous	☐ Periodic	
k-area	☐ Continuous	☐ Periodic	
Backing & weld tabs removed	☐ Continuous	☐ Periodic	
Repair activities	☐ Continuous	☐ Periodic	
Document acceptance or rejection of welded joint/member	☐ Continuous	☐ Periodic	
NONDESTRUCTIVE TESTING (SECTION N5.5, AISC 360-10):			
CJP welds (Risk Cat. II)	☐ Continuous	☐ Periodic	Ultrasonic testing shall be performed on 10% of CJP groove welds in butt, T- and corner joints subject to transversely applied tension loading in materials 5/16-inch thick or greater. Testing rate must be increased if > 5% of welds tested have unacceptable defects.
CJP welds (Risk Cat. III or IV)	☐ Continuous	☐ Periodic	***A reduction in the rate of ultrasonic testing is allowed per Section N5.5e.***
Access holes (flange > 2")	☐ Continuous	☐ Periodic	
Welded joints subject to fatigue	☐ Continuous	☐ Periodic	
PRIOR TO BOLTING (TABLE N5.6-1, AISC 360-10): ➢ *Not required if only snug-tight joints are specified [per Section N5.6(1) of AISC 360-10].*			
Certifications of fasteners	☐ Continuous	☐ Periodic	
Fasteners marked	☐ Continuous	☐ Periodic	Verify that fasteners have been marked in accordance with ASTM requirements.
Proper fasteners for joint	☐ Continuous	☐ Periodic	Verify grade, type, and bolt length if threads are excluded from the shear plane.
Proper bolting procedure	☐ Continuous	☐ Periodic	Verify proper procedure is used for the joint detail.
Connecting elements	☐ Continuous	☐ Periodic	Verify appropriate faying surface condition and hole preparation, if specified, meet requirements.
Pre-installation verification testing	☐ Continuous	☐ Periodic	Observe and document verification testing by installation personnel for fastener assemblies and methods used.
Proper storage	☐ Continuous	☐ Periodic	Verify proper storage of bolts, nuts, washers, and other fastener components.
DURING BOLTING (TABLE N5.6-2, AISC 360-10): ➢ *Not required if only snug-tight joints are specified [per Section N5.6(1) of AISC 360-10].* ➢ *Not required for pretensioned joints using turn-of-the-nut method with match-marking, direct-tension-indicators, or twist-off type tension control method [per Section N5.6(2) of AISC 360-10].*			
Fastener assemblies	☐ Continuous	☐ Periodic	Verify that fastener assemblies are of suitable condition, paced in all holes, and washers are positioned as required.
Snug-tight prior to pretensioning	☐ Continuous	☐ Periodic	Verify that joints are brought to snug-tight condition prior to pretensioning operation.
Fastener component	☐ Continuous	☐ Periodic	Verify that fastener component is not turned by wrench prevented from rotating.
Pretensioned fasteners	☐ Continuous	☐ Periodic	Verify that fasteners are Pretensioned in accordance with RCSC Specification, progressing systematically from the most rigid point toward the free edges.

AFTER BOLTING (TABLE N5.6-3, AISC 360-10):			
Document acceptance or rejection of bolted connections	☐ Continuous	☐ Periodic	
OTHER STEEL INSPECTIONS (SECTION N5.7, AISC 360-10; Tables J8-1 & J10-1, AISC 341-10):			
Structural steel details	☐ Continuous	☐ Periodic	All fabricated steel or steel frames shall be inspected to verify compliance with the details shown in the construction documents, such as braces, stiffeners, member locations, and proper application of joint details at each connection.
Anchor rods and other embedments supporting structural steel	☐ Continuous	☐ Periodic	Shall be on the premises during the placement of anchor rods and other embedments supporting structural steel for compliance with construction documents. Verify the diameter, grade, type, and length of the anchor rod or embedded item, and the extent or depth of embedment prior to placement of concrete.
Reduced beam sections (RBS)	☐ Continuous	☐ Periodic	Verify contour and finish as well as dimensional tolerances *(see Table J8-1 of AISC 341-10).*
Protected zones	☐ Continuous	☐ Periodic	Verify that no holes or unapproved attachments are made within the protected zone *(see Table J8-1 of AISC 341-10).*
H-piles	☐ Continuous	☐ Periodic	Verify that no holes or unapproved attachments occur within the protected zones of piling *(see Table J10-1 of AISC 341-10).*
STEEL ELEMENTS OF COMPOSITE CONSTRUCTION (TABLE N6.1, AISC 360-10; TABLES J9-1 thru J9-3, AISC 341-11):			
Placement and installation of steel deck	☐ Continuous	☐ Periodic	
Placement and installation of steel headed stud anchors	☐ Continuous	☐ Periodic	
Document acceptance or rejection of steel elements	☐ Continuous	☐ Periodic	
Reinforcing steel	☐ Continuous	☐ Periodic	Verify appropriate reinforcement size, spacing, and orientation; that it has not been re-bent in field; that it is correctly tied and supported; and that required steel clearances have been provided.
Composite member size	☐ Continuous	☐ Periodic	Verify that composite member is the required size.

STEEL CONSTRUCTION OTHER THAN STRUCTURAL STEEL (IBC 1705.2.2)

Item			Detailed Instructions and Frequencies
STEEL ROOF AND FLOOR DECKS (IBC TABLE 1705.2.2):			
Material verification of cold-formed steel deck	☐ Continuous	☐ Periodic	Confirm that identification markings are provided to conform to ASTM standards specified on construction documents.
Floor and roof deck welds	☐ Continuous	☐ Periodic	Visual inspection is required to confirm that weld meets acceptance criteria of AWS D1.3. Welder qualifications should also be verified.
WELDING OF REINFORCING STEEL (IBC TABLE 1705.2.2):			
Verification of weldability	☐ Continuous	☐ Periodic	Verify weldability of reinforcing steel based upon carbon equivalent and in accordance with AWS D1.4.
Reinforcing steel in intermediate or special moment fames, and boundary elements of special structural walls	☐ Continuous	☐ Periodic	
Shear reinforcement	☐ Continuous	☐ Periodic	
Other reinforcing steel	☐ Continuous	☐ Periodic	Visually inspect all welds in accordance with AWS D1.4.
COLD-FORMED STEEL CONSTRUCTION (IBC 1705.2.2.1.1, 1705.10.3, and 1705.11.3):			
Trusses spanning > 60-feet	☐ Continuous	☐ Periodic	Verify that temporary and permanent truss bracing is installed in accordance with approved truss package. Performed by code inspection firm.
Wind-force-resisting systems or seismic-force-resisting systems	☐ Continuous	☐ Periodic	Periodic inspections of welding operations. If fastener spacing is < 4"o.c.: Verify that proper screw attachment, bolting, anchoring and other fastening of shear walls, diaphragms, drag struts, braces, shear panels and holdowns has occurred. Performed by code inspection firm.

CONCRETE CONSTRUCTION (IBC 1705.3 & 1705.12.1)

Item			Detailed Instructions and Frequencies
Reinforcing steel, including prestressing tendons	☐ Continuous	☐ Periodic	Verify prior to placing concrete that reinforcing is of specified type, grade and size; that it is free of oil, dirt and rust; that it is located and spaced properly; that hooks, bends, ties, stirrups and supplemental reinforcement are placed correctly; that lap lengths, stagger and offsets are provided; and that all mechanical connections are installed per the manufacturer's instructions and/or evaluation report.
Cast-in bolts & embeds	☐ Continuous	☐ Periodic	Inspection of anchors or embeds cast in concrete is required when allowable loads have been increased or where strength design is used.
Post-installed anchors or dowels	☐ Continuous	☐ Periodic	All post-installed anchors/dowels shall be specially inspected as required by the approved ICC-ES report.
Use of required mix design	☐ Continuous	☐ Periodic	Verify that all mixes used comply with the approved construction documents; ACI 318: Ch. 4, 5.2-5.4; and IBC 1904.3, 1913.2, 1913.3.
Concrete sampling for strength tests, slump, air content, and temperature	☐ Continuous	☐ Periodic	
Concrete & shotcrete placement	☐ Continuous	☐ Periodic	

Curing temperature and techniques	☐ Continuous	☐ Periodic	Verify that the ambient temperature for concrete is kept at > 50°F for at least 7 days after placement. High-early-strength concrete shall be kept at > 50°F for at least 3 days. Accelerated curing methods may be used (see ACI 318: 5.11.3). The ambient temperature for shotcrete shall be > 40°F for the same period of time as noted for concrete. Shotcrete shall be kept continuously moist for at least 24 hours after shotcreting. All concrete materials, reinforcement, forms, fillers, and ground shall be free from frost. In hot weather conditions ensure that appropriate measures are taken to avoid plastic shrinkage cracking and that the specified water/cement ratio is not exceeded.
Pre-stressed concrete	☐ Continuous	☐ Periodic	
Erection of precast concrete	☐ Continuous	☐ Periodic	Verify that all precast elements are lifted, assembled and braced in accordance with the approved construction documents.
Strength verification	☐ Continuous	☐ Periodic	Verify that adequate strength has been achieved prior to the removal of shores and forms or the stressing of post-tensioned tendons.
Formwork	☐ Continuous	☐ Periodic	Verify that the forms are placed plumb and conform to the shapes, lines, and dimensions of the members as required by the approved construction documents.
Reinforcement complying with ASTM A 615 in special moment frames, special structural walls and coupling beams	☐ Continuous	☐ Periodic	Verify that ASTM A 615 reinforcing steel used in these areas complies with ACI 318: 21.1.5.2 by means of certified mill test reports. If this reinforcing steel is to be welded chemical tests shall be performed in accordance with ACI 318: 3.5.2.

MASONRY CONSTRUCTION (IBC 1705.4)

Item			Detailed Instructions and Frequencies
PRIOR TO CONSTRUCTION (ARTICLE 1.15, TMS-602/ACI 530.1-11):			
Review material certificates, mix designs, test results and construction procedures	☐ Continuous	☐ Periodic	Verify that materials conform to the requirements of the approved construction documents. Mix design, test results, material certificates, and construction procedures should be submitted for review. Mortar mix designs shall conform to ASTM C 270 while grout shall conform to ASTM C 476. Material certificates shall be provided for the following: reinforcement; anchors, ties, fasteners, and metal accessories; masonry units; mortar and grout materials. Construction procedures for cold-weather or hot-weather construction shall be reviewed.
AS CONSTRUCTION BEGINS (TABLE 1.19.2, TMS-402/ACI 530-11):			
Proportions of site-prepared mortar	☐ Continuous	☐ Periodic	Verify that mortar is of the type and color specified on the construction documents, that it conforms to ASTM C 270, and that it is mixed in accordance with Article 2.6 A of TMS-602/ACI 530.1-11.
Construction of mortar joints	☐ Continuous	☐ Periodic	Verify that mortar joints comply with Article 3.3 B of TMS-602/ACI 530.1-11.
Grade and size of prestressing tendons and anchorages	☐ Continuous	☐ Periodic	Verify that prestressing tendons comply with Article 2.4 B of TMS-602/ACI 530.1-11 and that anchorages, couplers, and end blocks comply with Article 2.4 H.
Location of reinforcement, connectors, and prestressing tendons and anchorages	☐ Continuous	☐ Periodic	Verify that reinforcement is placed in accordance with Article 3.4 of TMS-602/ACI 530.1-11. Prestressing tendons shall be placed per Article 3.6 A.
Prestressing technique	☐ Continuous	☐ Periodic	Verify that prestressing technique complies with Article 3.6 B of TMS-602/ACI 530.1-11.
Properties of thin-bed mortar for AAC masonry	☐ Continuous	☐ Periodic	Verify that mortar complies with Article 2.1 C of TMS-602/ACI 530.1-11.
PRIOR TO GROUTING (TABLE 1.19.2, TMS-402/ACI 530-11):			
Grout space	☐ Continuous	☐ Periodic	Verify that grout space is free of mortar droppings, debris, loose aggregate, and other deleterious materials and that cleanouts are provided per Article 3.2 D and 3.2 F of TMS-602/ACI 530.1-11. *Continuous inspection is required for Risk Category IV buildings.*
Grade, type, and size of reinforcement and anchor bolts, and prestressing tendons and anchorages	☐ Continuous	☐ Periodic	Verify that reinforcement, joint reinforcement, wall ties, anchor bolts and veneer anchors comply with the approved construction documents and Section 1.6 of TMS 402/ACI 530-11.
Placement of reinforcement, connectors, and prestressing tendons and anchorages	☐ Continuous	☐ Periodic	Verify that reinforcement, joint reinforcement, wall ties, anchor bolts and veneer anchors are installed in accordance with the approved construction documents and Articles 3.2 E, 3.4, and 3.6 A of TMS 602/ACI 530.1-11. *Continuous inspection is required for Risk Category IV buildings.*
Proportions of site-prepared grout and prestressing grout for bonded tendons	☐ Continuous	☐ Periodic	Verify that grout is proportioned per ASTM C 476 and has a slump between 8-11 inches. Self-consolidated grout shall not be proportioned onsite. (see Articles 2.6 B and 2.4 G.1.b of TMS 602/ACI 530.1-11. *Continuous inspection is required for Risk Category IV buildings.*
Construction of mortar joints	☐ Continuous	☐ Periodic	Verify that mortar joints are placed in accordance with Article 3.3 B of TMS 602/ACI 530.1-11.
DURING MASONRY CONSTRUCTION:			
Size and location of structural elements	☐ Continuous	☐ Periodic	Verify the locations of structural elements with respect to the approved plans and confirm that tolerances meet the requirements of Article 3.3 F of TMS 602/ACI 530.1-11.
Type, size, and location of anchors, including other details of anchorage of masonry to structural members, frames, or other construction.	☐ Continuous	☐ Periodic	Verify that correct anchorages and connections are provided per the approved plans and Sections 1.16.4.3 and 1.17.1 of TMS 402/ACI 530-11. *Continuous inspection is required for Risk Category IV buildings.*
Welding of reinforcement	☐ Continuous	☐ Periodic	
Preparation, construction, and protection of masonry during cold weather (<40°F) or hot weather (>90°F).	☐ Continuous	☐ Periodic	Verify that cold-weather construction is performed in accordance with Article 1.8 C of TMS 602/ACI 530.1-11 and hot weather construction per Article 1.8 D of TMS 602/ACI 530.1-11.
Application and measurement of prestressing force	☐ Continuous	☐ Periodic	

SANDERS ASSOCIATES ARCHITECTS
2668 Grant Avenue
Ogden, UT 84401
☎ 801 621.7303
www.sandersarch.com

Seal

REGISTERED PROFESSIONAL ARCHITECT
M. SHANE SANDERS
5594503-0301
UTAH

Consultant

Project Name

WSU- MILLER ADMINISTRATION
MEP Upgrades and Remodel
3848 HARRISON BLVD.
OGDEN, UTAH 84401

Issued

No.	Date	Description
1	01.16.15	DFCM PLAN REVIEW
2	02.03.15	BID DOCUMENTS

Revision

No.	Date	Description

DFCM Project No. 14031810
SAA Project No. 214016

Drawing Title

SPECIAL INSPECTIONS

Sheet Number

GI003

DFCM approval

Placement of grout and prestressing grout for bonded tendons is in compliance	☐ Continuous	☐ Periodic	
Placement of AAC masonry units and construction of thin-bed mortar joints	☐ Continuous	☐ Periodic	Verify that mortar is placed in accordance with Article 3.3 B.8 of TMS-602/ACI 530.1-11.
Observation of grout specimens, mortar specimens, and/or prisms	☐ Continuous	☐ Periodic	Confirm that specimens/prisms are performed as required by Article 1.4 of TMS-602/ACI 530.1-11. *Continuous inspection is required for Risk Category IV buildings.*
MINIMUM TESTING:			
Verification of Slump Flow and Visual Stability Index (VSI) for self-consolidating grout	☐ Continuous	☐ Periodic	Compressive strength tests should be performed in accordance with ASTM C 1019 for slump flow and ASTM C 1611 for VSI.
Verification of f'_m and f'_{AAC}	☐ Continuous	☐ Periodic	Determine the compressive strength for each wythe by the "unit strength method" or by the "prism test method" as specified in Article 1.4 B of TMS 602/ACI 530.1-11 prior to construction. *For Risk Category IV buildings this should be verified at every 5,000ft² of construction.*
Verification of proportions of materials in premixed or pre-blended mortar and grout	☐ Continuous	☐ Periodic	Verify that proportions for mortar meet ASTM C 270 and proportions for grout meet ASTM C 476. This applies to *Risk Category IV buildings only.*

WOOD CONSTRUCTION (IBC 1705.5, 1705.10.1 & 1705.11.2)

Item			Detailed Instructions and Frequencies
High-load diaphragms	☐ Continuous	☐ Periodic	Verify thickness and grade of sheathing, size of framing members at panel edges, nail/staple diameters and length, and the number of fastener lines and fastener spacing per approved plans. ***Performed by code inspection firm.***
Wood trusses spanning > 60-feet	☐ Continuous	☐ Periodic	Verify that temporary and permanent truss bracing is installed in accordance with approved truss package. ***Performed by code inspection firm.***
Structural wood	☐ Continuous	☐ Periodic	If fastener spacing is < 4"o.c.: Verify that proper nailing, bolting, anchoring and other fastening of shear walls, diaphragms, drag struts, braces, and holdowns. ***Performed by code inspection firm.***

SOILS CONSTRUCTION (IBC 1705.6)

Item			Detailed Instructions and Frequencies
Verify subgrade is adequate to achieve design bearing capacity	☐ Continuous	☐ Periodic	Prior to placement of concrete.
Verify excavations extend to proper depth and material	☐ Continuous	☐ Periodic	Prior to placement of compacted fill or concrete.
Verify that subgrade has been appropriately prepared prior to placing compacted fill	☐ Continuous	☐ Periodic	Prior to placement of compacted fill.
Perform classification and testing of compacted fill materials	☐ Continuous	☐ Periodic	All materials shall be checked at each lift for proper classifications and gradations not less than once for each 10,000ft² of surface area.

Verify proper materials, densities and lift thicknesses during placement and compaction.	☐ Continuous	☐ Periodic	

DRIVEN DEEP FOUNDATIONS (IBC 1705.7)

Item			Detailed Instructions and Frequencies
Verify materials, sizes and lengths	☐ Continuous	☐ Periodic	
Determine capacities and conduct necessary load tests	☐ Continuous	☐ Periodic	
Observe drilling operations	☐ Continuous	☐ Periodic	
Verify placement locations & plumbness, confirm type & size of hammer, record number of blows per foot, record tip and butt elevations and document any damage to element	☐ Continuous	☐ Periodic	
Perform additional inspections for steel, concrete or other specialty elements.	☐ Continuous	☐ Periodic	Steel per IBC 1705.2 Concrete per IBC 1705.3 Specialty items per registered design professional

CAST-IN-PLACE DEEP FOUNDATIONS (IBC 1705.8)

Item			Detailed Instructions and Frequencies
Observe drilling operation and reporting	☐ Continuous	☐ Periodic	
Verify placement locations & plumbness, confirm element diameters, lengths, embedment and adequate end-bearing capacity. Record concrete or grout volumes.	☐ Continuous	☐ Periodic	
Perform additional inspections for concrete elements.	☐ Continuous	☐ Periodic	Concrete per IBC 1705.3

HELICAL PILE FOUNDATIONS (IBC 1705.9)

Item			Detailed Instructions and Frequencies
Record installation equipment used, pile dimensions, tip elevations, final depth, and final installation torque	☐ Continuous	☐ Periodic	
Verify that helical piles used match the approved submittal	☐ Continuous	☐ Periodic	

SPRAYED FIRE-RESISTANT MATERIALS (IBC 1705.13)

Item			Detailed Instructions and Frequencies
Surface preparation	☐ Continuous	☐ Periodic	Prior to application confirm that surface has been prepared per the approved fire-resistance design and manufacturer's instructions.
Material thickness	☐ Continuous	☐ Periodic	Samples shall be taken from selected floor, roof and wall assemblies and structural members. No more than 10% of the samples shall be less than the thickness required by the fire-resistance design.

Material density	☐ Continuous	☐ Periodic	Density tests shall be performed in accordance with ASTM E 605 for every 2,500ft² of floor, roof or wall area. One sample must also be provided for each beam, girder, truss or column at each story.
Bonding strength	☐ Continuous	☐ Periodic	Bond strength tests shall be performed in accordance with ASTM E 736 for every 2,500ft² of floor, roof or wall area. One sample must also be provided for each beam, girder, truss or column at each story. The bond strength shall not be less than 150psf.

MASTIC AND INTUMESCENT FIRE-RESISTANT COATINGS (IBC 1705.14)

Item			Detailed Instructions and Frequencies
Surface preparation	☐ Continuous	☐ Periodic	Prior to application confirm that surface temperature and substrate are acceptable and that a compatible primer is used in accordance with AWCI 12-B.
Thickness	☐ Continuous	☐ Periodic	Record thickness of primer or other existing coating on substrate prior to application of coating. Final thickness of coating must be verified in multiple locations prior to applying top coat per AWCI 12-B.

EXTERIOR INSULATION AND FINISH SYSTEMS (EIFS) (IBC 1705.15)

Item			Detailed Instructions and Frequencies
Material and installation	☐ Continuous	☐ Periodic	Verify that water-resistive barrier, complying with ASTM E 2570, is installed appropriately over a sheathing substrate. *(Not required if applied over concrete, masonry, or if a means of draining moisture to exterior is provided.)* ***Performed by code inspection firm.***

FIRE-RESISTANT PENETRATIONS AND JOINTS (IBC 1705.16)

- *Only required for high-rise buildings or those assigned to Risk Category III or IV per IBC Table 1604.5.*

Item			Detailed Instructions and Frequencies
Penetration firestops	☐ Continuous	☒ Periodic	Listed systems shall be inspected in accordance with ASTM E 2393.
Fire-resistant joint systems	☐ Continuous	☒ Periodic	Listed systems shall be inspected in accordance with ASTM E 2393.

SMOKE CONTROL (IBC 1705.17)

Item			Detailed Instructions and Frequencies
Verify device locations and perform leakage testing	☐ Continuous	☒ Periodic	During erection of ductwork and prior to concealment. As defined by rational analysis.
Pressure difference testing, flow measurements and detection and control verification	☐ Continuous	☒ Periodic	Prior to occupancy and after sufficient completion. As defined by rational analysis.

ARCHITECTURAL COMPONENTS (IBC 1705.11.5 & 1705.11.7)

- *Only required for buildings located within Seismic Design Category D, E, or F.*

Item			Detailed Instructions and Frequencies
Erection and fastening of exterior cladding or interior and exterior veneers	☐ Continuous	☐ Periodic	Verify appropriate materials, fasteners and attachment at commencement of work and at completion. Performed by code inspection firm. (Not required if < 30 feet or less than 5psf).

Erection and fastening of interior and exterior nonbearing walls	☐ Continuous	☒ Periodic	Verify appropriate materials, fasteners and attachment at commencement of work and at completion. Performed by code inspection firm. (Not required if < 30 feet or for interior walls < 15psf).
Access floors	☐ Continuous	☐ Periodic	Verify that anchorage complies with approved construction documents. Inspection of post-installed anchors shall comply with approved ICC-ES report. ***Performed by code inspection firm.***
Storage racks	☐ Continuous	☐ Periodic	Verify that anchorage complies with approved construction documents. Inspection of post-installed anchors shall comply with approved ICC-ES report. ***Performed by code inspection firm.***

MECHANICAL & ELECTRICAL COMPONENTS (IBC 1705.11.4 & 1705.11.6)

- *Only required for buildings located within Seismic Design Category C, D, E, or F.*

Item			Detailed Instructions and Frequencies
Anchorage of emergency or standby power systems **(EXISTING)**	☐ Continuous **(EXISTING)**	☐ Periodic **(EXISTING)**	Verify that anchorage complies with approved construction documents. **(EXISTING)** ***Performed by code inspection firm.***
Installation of piping systems carrying flammable, combustible or highly toxic materials	☐ Continuous	☐ Periodic	Verify that installation and restraint comply with approved construction documents. ***Performed by code inspection firm.***
Installation of HVAC ductwork containing hazardous materials	☐ Continuous	☐ Periodic	Verify that installation and restraint comply with approved construction documents. ***Performed by code inspection firm.***
Installation of vibration isolation systems having a clearance of ≤¼"	☐ Continuous	☐ Periodic	Verify that installation complies with approved construction documents and manufacturer's recommendations. ***Performed by code inspection firm.***
Designated seismic systems	☐ Continuous	☐ Periodic	Confirm that manufacturer's certificate of compliance conforms to the requirements of Section 13.2 of ASCE 7-10. Verify that the label, anchorage or mounting conforms to the manufacturer's certificate of compliance. ***Performed by code inspection firm.***

SEISMICALLY ISOLATED STRUCTURES (IBC 1705.11.8 & 1705.12.4)

Item			Detailed Instructions and Frequencies
Prototype tests	☐ Continuous	☒ Periodic	Prototype tests shall be performed on selected samples prior to construction in accordance with Section 17.8 of ASCE 7-10.
Fabrication and installation	☐ Continuous	☒ Periodic	Verify that fabrication and installation of isolator units and energy dissipation devices conform to manufacturer's recommendations and approved construction documents.

SPECIAL CASES (IBC 1705.1.1) – material alternatives or unusual design applications

Item			Detailed Instructions and Frequencies
Material and installation	☐ Continuous	☐ Periodic	Per design professional in responsible charge or report from an accepted accreditation agency (i.e. ICC-ES).

MISCELLANEOUS AREAS

- *These inspections may be recommended by the Architect/Engineer and are to be approved by DFCM.*

Item			Detailed Instructions and Frequencies
Suspended Acoustical Ceilings	☐ Continuous	☒ Periodic	***Performed by code inspection firm.***
Soil backfill (specify locations and frequency)	☐ Continuous	☐ Periodic	
Soils for curb and gutter (specify locations and frequency)	☐ Continuous	☐ Periodic	
Soils for parking lots (specify locations and frequency)	☐ Continuous	☐ Periodic	
Soils for utility trench backfill	☐ Continuous	☐ Periodic	
Reinforcement for slab on grade sidewalks and drive approaches (specify locations and frequency)	☐ Continuous	☐ Periodic	
Reinforcement for interior slab on grade (specify locations and frequency)	☐ Continuous	☐ Periodic	
Concrete testing for slab on grade sidewalks and drive approaches (specify locations and frequency)	☐ Continuous	☐ Periodic	
Concrete testing for interior slab on grade (specify locations and frequency)	☐ Continuous	☐ Periodic	
Asphalt inspection (specify locations and frequency)	☐ Continuous	☐ Periodic	
Asphalt testing (specify locations and frequency)	☐ Continuous	☐ Periodic	
Steam and water line welding (specify locations and frequency)	☐ Continuous	☐ Periodic	
Seismic supports for duct work and sealing of joints for duct work	☐ Continuous	☐ Periodic	
Seismic supports for electrical raceways, cable trays and lights	☐ Continuous	☒ Periodic	
Seismic supports for plumbing lines including gas, water and steam and condensation	☐ Continuous	☒ Periodic	
Seismic bracing for mechanical units both on slab and suspended	☐ Continuous	☒ Periodic	
	☐ Continuous	☐ Periodic	
	☐ Continuous	☐ Periodic	
	☐ Continuous	☐ Periodic	
	☐ Continuous	☐ Periodic	

Special Inspectors Shall:

- Be approved by the Building Official prior to performing any duties;
- Provide proof of licensure as a special inspector by the State of Utah for each type of inspection;
- Inspection reports are to meet the requirements of IBC 1704.2.4 and DFCM standards;
- Inspection reports are to be submitted to the code consultant, architect, DFCM project manager, and the State of Utah Building Official within 48 hours of performing inspections;
- A final inspection report shall be submitted following completion of the project documenting the types of special inspections performed and a statement indicating that the structure is in compliance with the approved construction documents and applicable codes (see IBC 1704.2.4).

STRUCTURAL OBSERVATIONS (IBC 1704.5)

Item		Proposed Frequency	Name of Structural Observer
Footings & Piers	☐ Required		
Mat Foundations	☐ Required		
Deep Foundations	☐ Required		
Grade Beams	☐ Required		
Concrete Walls	☐ Required		
Masonry Walls	☐ Required		
Wood Walls	☐ Required		
Steel Moment Frames	☐ Required		
Steel Braced Frames	☐ Required		
Concrete Moment Frames	☐ Required		
Concrete Diaphragms	☐ Required		
Steel Deck Diaphragms	☐ Required		
Wood Diaphragms	☐ Required		
Post-tensioned Deck	☐ Required		
Other:	☐ Required		
Other:	☐ Required		
Other:	☐ Required		
Other:	☐ Required		

Structural Observer's Shall:

- Provide proof of licensure as a licensed professional/structural engineer by the State of Utah;
- If structural observations are performed by individuals other than the design professional in responsible charge, they should first be approved by the Building Official.
- At the conclusion of work a final structural observation report must be submitted to the Building Official noting any deficiencies which, to the best of the structural observer's knowledge, have not been resolved (see IBC 1704.5).

Updated July 22, 2013

NONSTRUCTURAL COMPONENT CHECKLIST

ITEM DESCRIPTION	*NOT REQUIRED*	*ON CONST. DOCUMENTS*	*DEFERRED SUBMITTAL*	*COMMENTS*
Architectural Components:				
Interior Nonstructural Walls & Partitions			X	Refer to AE542 for new bracing at existing walls and Specification Section 092216
Cantilever Elements *(i.e. parapets, etc.)*	X			
Exterior Nonstructural Wall Elements	X			
Veneer	X			
Penthouses	X			
Ceilings *(i.e. suspended grid or hard-lid)*		X		Refer to AE542 for suspended ceiling detail
Cabinets *(i.e. storage cabinets, equip, etc.)*	X			
Access Floors	X			
Storage Racks	X			
Appendages & Ornamentations	X			
Signs & Billboards	X			
Other: Curtainwall System			X	Refer to Specification Section 084413
Other:				
MEP Components:				
Fire Sprinklers			X	
Mechanical Equipment *(i.e. HVAC, fans, air handlers, boilers, furnaces, tanks, chillers, water heaters, heat exchangers, evaporators, engines, turbines, pumps, compressors, MFR equipment, etc.)*			X	
Electrical Equipment *(i.e. generators, batteries, inverters, transformers, MCC, panel boards, switch gear, cabinets, etc.)*		X		
Elevator & Escalator Components	X			
Communication Equipment, Computers, Instrumentation, and Controls	X			By WSU
Roof-mounted Chimneys, Stacks, Cooling & Electrical Towers	X			
Lighting Fixtures		X		
Vibration Isolated Components	X			
Piping & Conduit Systems		X Conduit	X Piping	
Ductwork *(including in-line components)*			X	
Conveyors	X			
Cable Trays		X		
Other:				
Other:				

NOTES:

1. Deferred submittals for seismic restraint of nonstructural components must be submitted to the DFCM Building Official a minimum of two weeks prior to the planned installation in order to allow for plan review and forwarding to inspectors. In the event that the submittal is deficient additional time may become necessary.
2. If seismic restraints of non-structural components are installed prior to receiving DFCM approval they shall not be covered or concealed until receiving both plan review and inspection approval. Further, installers are proceeding at their own risk until plan review and inspection approval occurs.
3. The requirements for seismic restraint of nonstructural components cannot be satisfied by a general reference to Design Manuals. The design professional may utilize these manuals as a basis of their design, but must provide all supporting documentation to ensure that the design conforms to the requirements of ASCE 7-10, Chapter 13.
4. Submittals must include details of the proposed seismic restraint of nonstructural components. These details must show specific information relating to the materials, type, size, and locations of anchorages; materials used for bracing; attachment requirements of bracing to structure and component; and locations of transverse and longitudinal sway bracing and rod stiffeners. Submittals may also require structural calculations, engineering reports, test data, and/or specifications to ensure code compliance.

DFCM approval

SANDERS ASSOCIATES ARCHITECTS
2668 Grant Avenue
Ogden, UT 84401
P : 801.621.7303
www.sandersarch.com

Seal

Consultant

Project Name

WSU- MILLER ADMINISTRATION
MEP Upgrades and Remodel
3848 HARRISON BLVD.
OGDEN, UTAH 84401

Issued

No.	Date	Description
1	01.16.15	DFCM PLAN REVIEW
2	02.03.15	BID DOCUMENTS

Revision #

No.	Date	Description

DFCM Project No. 14031810
SAA Project No. 214016

Drawing Title

SPECIAL INSPECTIONS

Sheet Number

GI004

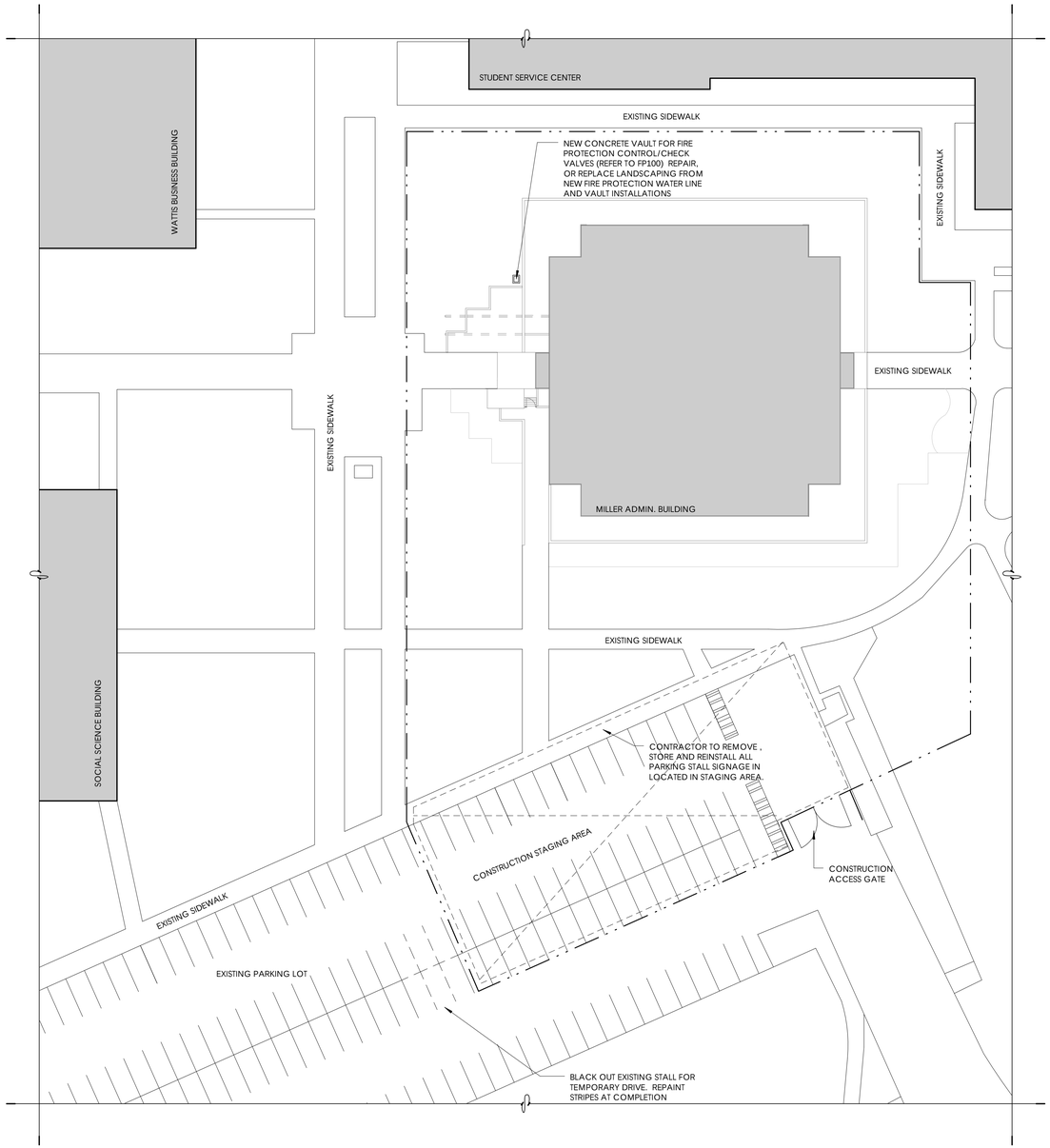

Site Plan

1" = 30'-0"

GENERAL SITE PLAN NOTES

1. KEEP SITE CLEAN AND CLEAR OF DEBRIS AND IN ORDERLY CONDITION THAT DOES NOT DETRACT FROM THE SURROUNDING SITE AND REPAIR ANY DAMAGE CAUSED BY WORK OF THE CONTRACT.
2. DISCREPANCIES BETWEEN ACTUAL CONDITIONS AND PLANS SHALL BE BROUGHT TO THE ATTENTION OF THE ARCHITECT. CONTRACTOR SHALL SUBMIT SPECIFIC DISCREPANCIES FOR ARCHITECT REVIEW.
3. REPLACE SIDEWALKS, LANDSCAPING AND CONCRETE MOW STRIP DAMAGED OR REMOVED FOR CONSTRUCTION.
4. ALL TOP SOIL SHALL BE STRIPPED, STOCKPILED AND PROTECTED PRIOR TO EXCAVATION PROCEDURES TO ENSURE VIABILITY OF TOPSOIL AND AVOID ANY CONTAMINATION.

LEGEND

CONSTRUCTION LIMIT LINE AND CHAIN LINK FENCE

EXISTING BUILDINGS

DFCM approval

SANDERS ASSOCIATES ARCHITECTS
2668 Grant Avenue
Ogden, UT 84401
t 801.621.7303
www.sandersarch.com

Seal

REGISTERED PROFESSIONAL ARCHITECT
M. SHANE SANDERS
5294503-0301
UTAH

Consultant

Project Name

WSU- MILLER ADMINISTRATION

MEP Upgrades and Remodel

3848 HARRISON BLVD.
OGDEN, UTAH 84401

Issued

No.	Date	Description
1	01.16.15	DFCM PLAN REVIEW
2	02.03.15	BID DOCUMENTS

Revision #

No.	Date	Description

DFCM Project No. 14031810

SAA Project No. 214016

Drawing Title

SITE PLAN

Sheet Number

CS100

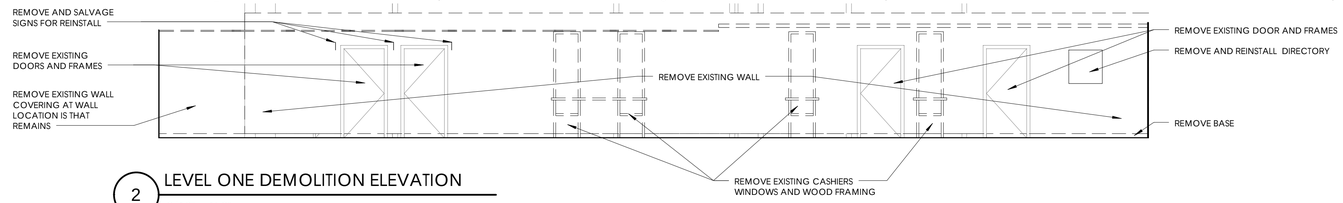

2 LEVEL ONE DEMOLITION ELEVATION

3/16" = 1'-0"

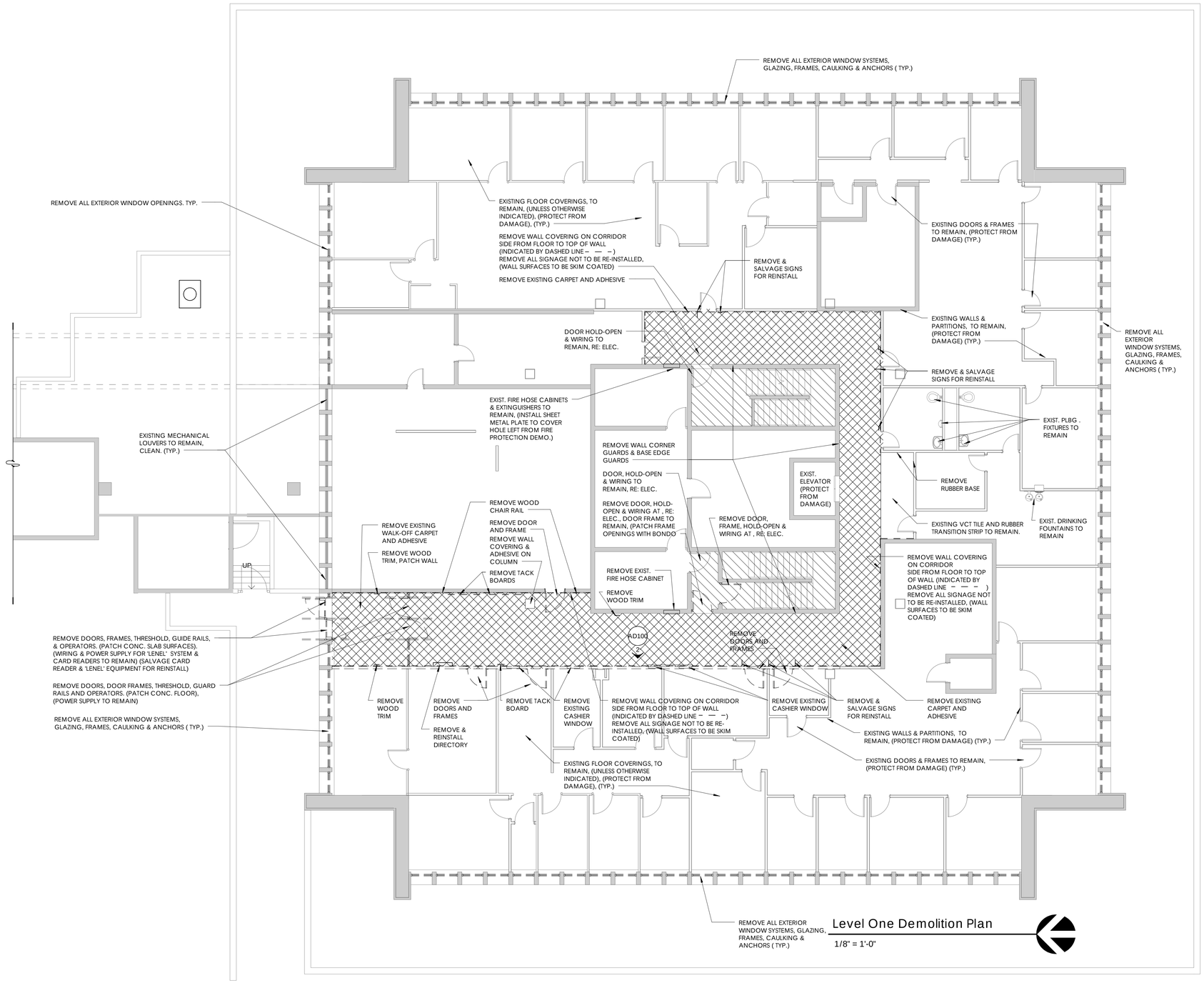

Level One Demolition Plan

1/8" = 1'-0"

GENERAL DEMOLITION NOTES

1. DEMOLITION WORK WITHIN THE EXISTING BUILDING WILL NOT COMMENCE BEFORE MAY 01, 2015.
2. THE CONTRACTOR TO INSTALL FLEXBOARD OVER ALL FLOOR MATERIAL TO REMAIN, TO PROTECT SURFACES FROM CONSTRUCTION DEBRIS AND PROJECT WORK. 45 MIL MINIMUM THICKNESS. TAPE ALL JOINTS. CLEAN CARPET IF NECESSARY AT COMPLETION OF CONSTRUCTION.
3. THE CONTRACTOR TO MOVE ALL EXISTING FURNITURE A MINIMUM OF (3) FEET FROM WALLS IN EACH ROOM. WRAP THE PERIMETER OF FURNITURE WITH 60 GAUGE STRETCH WRAP FILM A MINIMUM OF (2) WRAPS. COVER FURNITURE TOPS WITH 6 MIL PLASTIC AND WRAP PERIMETER WITH (2) MORE LAYERS OF 60 GAUGE STRETCH WRAP TO SEAL.
4. ALL EXISTING ARTWORK TO BE REMOVED BY WSU.
5. CONTRACTOR TO REMOVE ALL SIGNAGE IN CORRIDORS NOT INDICATED TO BE REINSTALLED. (COORDINATE WITH OWNER).
6. THE CONTRACTOR MUST FIELD VERIFY ALL DIMENSIONS AND CONDITIONS INCLUDING EXISTING UTILITIES PRIOR TO BIDDING AS THE LOCATIONS SHOWN IN THE DOCUMENTS ARE APPROXIMATED. ALL VARIANCES NOT SHOWN IN THE DRAWINGS SHALL BE BROUGHT TO THE ATTENTION OF THE ARCHITECT PRIOR TO BID.
7. CONTRACTOR TO COORDINATE WITH ELECTRICAL, MECHANICAL AND FIRE PROTECTION PLANS FOR LOCATIONS OF ALL EXISTING AND NEW EQUIPMENT, SYSTEMS, AND DEVICES.
8. AS SOME DEMOLITION WORK WILL BE SPECIFIC TO DIVISION 22, 23, 26, THE CONTRACTOR SHALL CROSS REFERENCE WITH ELECTRICAL AND MECHANICAL PLANS FOR ADDITIONAL DEMOLITION WHICH IS REQUIRED, BUT NOT REFLECTED ON ARCHITECTURAL DRAWINGS.
9. INTERIOR WALLS AND PARTITIONS TO REMAIN, UNLESS OTHERWISE INDICATED. (PROTECT FROM DAMAGE).
10. CONTRACTOR SHALL TAKE ALL PRECAUTIONS NECESSARY TO PROTECT THE EXISTING STRUCTURE, FINISHES, AND SITE ELEMENTS NOT CALLED FOR DEMOLITION DURING REMODEL OF WALLS, FLOORING MATERIAL, CASEWORK, DOORS, WINDOWS, CEILINGS, AND SITE.
11. ALL EXISTING INTERIOR FINISHES, MATERIALS, STRUCTURE, SYSTEMS, LANDSCAPING, AND SITE FEATURES, ETC., NOT IDENTIFIED FOR DEMOLITION THAT ARE DAMAGED DURING THE PROCESS OF CONSTRUCTION SHALL BE RESTORED TO THEIR ORIGINAL CONDITION OR REPLACED TO MATCH AT THE CONTRACTORS EXPENSE.
12. CONTRACTOR SHALL REMOVE AND DISPOSE OF ALL FLOORING, WALLS, & CEILING SYSTEMS AS SHOWN ON THE DRAWINGS.
13. ALL EXISTING FINISHED SURFACES DAMAGED DUE TO WORK UNDER THIS CONTRACT SHALL BE PATCHED & FINISHED TO MATCH EXISTING ADJACENT SURFACES.
14. PATCH & LEVEL EXISTING CONCRETE SLABS AS REQUIRED FOR NEW FINISHES WITH FLOOR LEVELING COMPOUND AS APPROVED BY ARCHITECT.
15. THE GENERAL CONTRACTOR SHALL BRING TO THE ATTENTION OF THE ARCHITECT FOR IMMEDIATE RESOLUTION, ANY CODE VIOLATIONS, INCORRECT CONSTRUCTIONS OR SAFETY PROBLEMS THAT ARE EXISTING FIELD CONDITIONS.
16. THE GENERAL CONTRACTOR IS RESPONSIBLE TO COORDINATE SCOPE IN REMODEL AS INDICATED ON ALL ARCHITECTURAL, ELECTRICAL, MECHANICAL, AND FIRE PROTECTION SHEETS AND COORDINATE AND PROVIDE DEMOLITION AS NEEDED. WORK AS DESCRIBED FOR REMODEL THAT IS IN CONFLICT WITH EXISTING CONDITION IS TO BE BROUGHT TO THE ATTENTION OF ARCHITECT PRIOR TO DEMOLITION.
17. REMOVE EXISTING RED IRON CEILING TILE SUSPENDED GRID SUPPORT SYSTEM.
18. EXISTING METAL SUSPENDED GRID PERIMETER WALL ANGLES CAN BE REUSED IF IN GOOD CONDITION AND NOT DAMAGED FROM DEMOLITION. PROVIDE ADDITIONAL ANCHORAGE SUPPORT FOR NEW SEISMIC CLIPS WHERE REQUIRED FOR NEW GRID SYSTEM.

DEMOLITION PLAN LEGEND

- REMOVE EXISTING CARPET AND ADHESIVE
- REMOVE EXISTING SHEET VINYL FLOORING AND RUBBER BASE (STAIR SKIRTS TO REMAIN)

DFCM approval

SANDERS ASSOCIATES ARCHITECTS
2668 Grant Avenue
Ogden, UT 84401
t 801.621.7303
www.sandersarch.com

Seal

REGISTERED PROFESSIONAL ARCHITECT
M. SHANE SANDERS
5526353-0301
UTAH

Consultant

Project Name

WSU- MILLER ADMINISTRATION

MEP Upgrades and Remodel

3848 HARRISON BLVD.
OGDEN, UTAH 84401

Issued

No.	Date	Description
1	01.16.15	DFCM PLAN REVIEW
2	02.03.15	BID DOCUMENTS

Revision #

No.	Date	Description

DFCM Project No. 14031810

SAA Project No. 214016

Drawing Title

LEVEL ONE DEMOLITION PLAN

Sheet Number

AD100

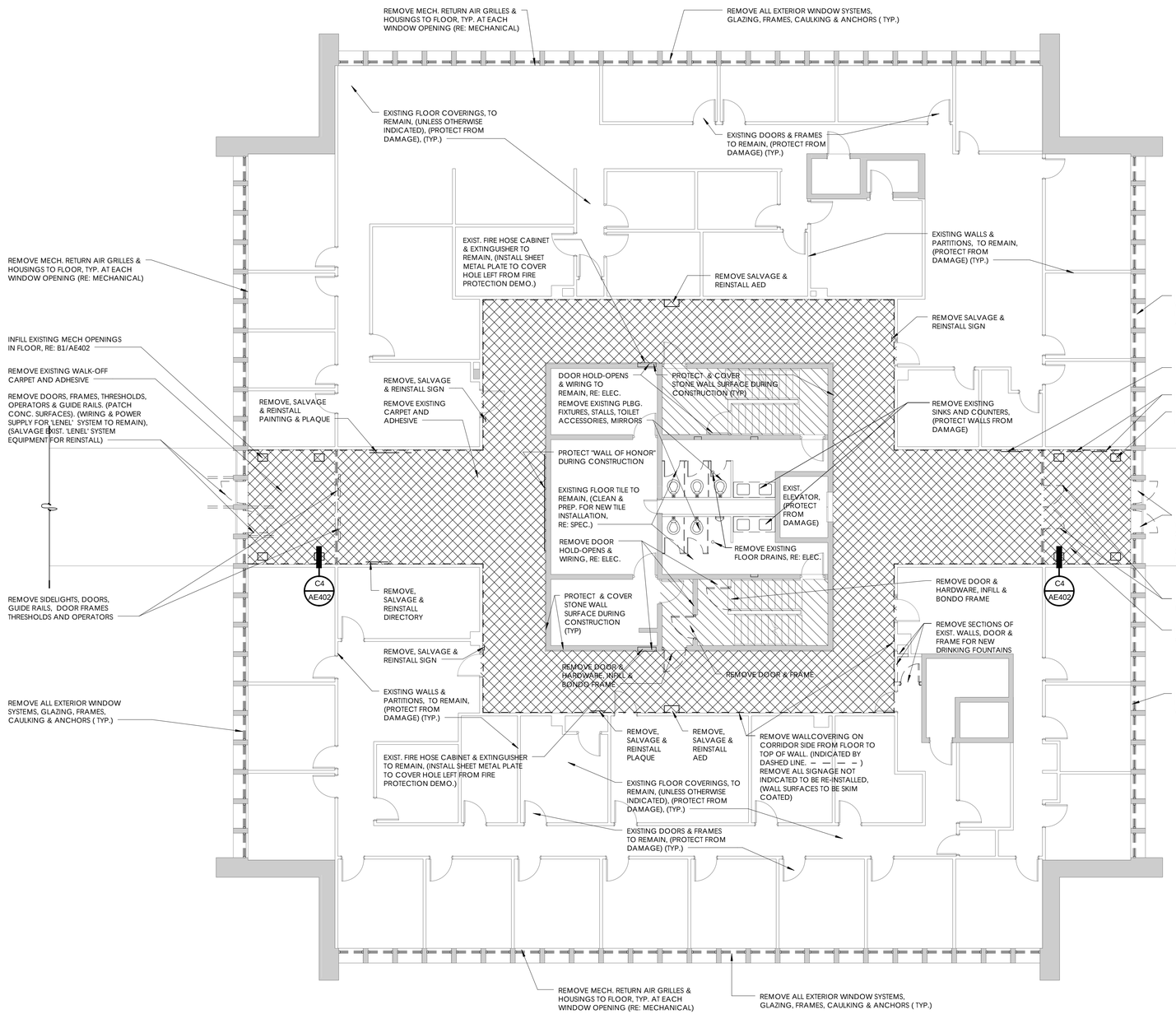

Level Two Demolition Plan

1/8" = 1'-0"

GENERAL DEMOLITION NOTES

1. DEMOLITION WORK WITHIN THE EXISTING BUILDING WILL NOT COMMENCE BEFORE MAY 01, 2015.
2. THE CONTRACTOR TO INSTALL FLEXBOARD OVER ALL FLOOR MATERIAL TO REMAIN, TO PROTECT SURFACES FROM CONSTRUCTION DEBRIS AND PROJECT WORK. 45 MIL MINIMUM THICKNESS. TAPE ALL JOINTS. CLEAN CARPET IF NECESSARY AT COMPLETION OF CONSTRUCTION.
3. THE CONTRACTOR TO MOVE ALL EXISTING FURNITURE A MINIMUM OF (3) FEET FROM WALLS IN EACH ROOM. WRAP THE PERIMETER OF FURNITURE WITH 60 GAUGE STRETCH WRAP FILM A MINIMUM OF (2) WRAPS. COVER FURNITURE TOPS WITH 6 MIL PLASTIC AND WRAP PERIMETER WITH (2) MORE LAYERS OF 60 GAUGE STRETCH WRAP TO SEAL.
4. ALL EXISTING ARTWORK TO BE REMOVED BY WSU.
5. CONTRACTOR TO REMOVE ALL SIGNAGE IN CORRIDORS NOT INDICATED TO BE REINSTALLED. (COORDINATE WITH OWNER).
6. THE CONTRACTOR MUST FIELD VERIFY ALL DIMENSIONS AND CONDITIONS INCLUDING EXISTING UTILITIES PRIOR TO BIDDING AS THE LOCATIONS SHOWN IN THE DOCUMENTS ARE APPROXIMATED. ALL VARIANCES NOT SHOWN IN THE DRAWINGS SHALL BE BROUGHT TO THE ATTENTION OF THE ARCHITECT PRIOR TO BID.
7. CONTRACTOR TO COORDINATE WITH ELECTRICAL, MECHANICAL AND FIRE PROTECTION PLANS FOR LOCATIONS OF ALL EXISTING AND NEW EQUIPMENT, SYSTEMS, AND DEVICES.
8. AS SOME DEMOLITION WORK WILL BE SPECIFIC TO DIVISION 22, 23, 26, THE CONTRACTOR SHALL CROSS REFERENCE WITH ELECTRICAL AND MECHANICAL PLANS FOR ADDITIONAL DEMOLITION WHICH IS REQUIRED, BUT NOT REFLECTED ON ARCHITECTURAL DRAWINGS.
9. INTERIOR WALLS AND PARTITIONS TO REMAIN, UNLESS OTHERWISE INDICATED. (PROTECT FROM DAMAGE).
10. CONTRACTOR SHALL TAKE ALL PRECAUTIONS NECESSARY TO PROTECT THE EXISTING STRUCTURE, FINISHES, AND SITE ELEMENTS NOT CALLED FOR DEMOLITION DURING REMODEL OF WALLS, FLOORING MATERIAL, CASEWORK, DOORS, WINDOWS, CEILINGS, AND SITE.
11. ALL EXISTING INTERIOR FINISHES, MATERIALS, STRUCTURE, SYSTEMS, LANDSCAPING, AND SITE FEATURES, ETC., NOT IDENTIFIED FOR DEMOLITION THAT ARE DAMAGED DURING THE PROCESS OF CONSTRUCTION SHALL BE RESTORED TO THEIR ORIGINAL CONDITION OR REPLACED TO MATCH AT THE CONTRACTORS EXPENSE.
12. CONTRACTOR SHALL REMOVE AND DISPOSE OF ALL FLOORING, WALLS, & CEILING SYSTEMS AS SHOWN ON THE DRAWINGS.
13. ALL EXISTING FINISHED SURFACES DAMAGED DUE TO WORK UNDER THIS CONTRACT SHALL BE PATCHED & FINISHED TO MATCH EXISTING ADJACENT SURFACES.
14. PATCH & LEVEL EXISTING CONCRETE SLABS AS REQUIRED FOR NEW FINISHES WITH FLOOR LEVELING COMPOUND AS APPROVED BY ARCHITECT.
15. THE GENERAL CONTRACTOR SHALL BRING TO THE ATTENTION OF THE ARCHITECT FOR IMMEDIATE RESOLUTION, ANY CODE VIOLATIONS, INCORRECT CONSTRUCTIONS OR SAFETY PROBLEMS THAT ARE EXISTING FIELD CONDITIONS.
16. THE GENERAL CONTRACTOR IS RESPONSIBLE TO COORDINATE SCOPE IN REMODEL AS INDICATED ON ALL ARCHITECTURAL, ELECTRICAL, MECHANICAL, AND FIRE PROTECTION SHEETS AND COORDINATE AND PROVIDE DEMOLITION AS NEEDED. WORK AS DESCRIBED FOR REMODEL THAT IS IN CONFLICT WITH EXISTING CONDITION IS TO BE BROUGHT TO THE ATTENTION OF ARCHITECT PRIOR TO DEMOLITION.
17. REMOVE EXISTING RED IRON CEILING TILE SUSPENDED GRID SUPPORT SYSTEM.
18. EXISTING METAL SUSPENDED GRID PERIMETER WALL ANGLES CAN BE REUSED IF IN GOOD CONDITION AND NOT DAMAGED FROM DEMOLITION. PROVIDE ADDITIONAL ANCHORAGE SUPPORT FOR NEW SEISMIC CLIPS WHERE REQUIRED FOR NEW GRID SYSTEM.

DEMOLITION PLAN LEGEND

- REMOVE EXISTING CARPET AND ADHESIVE
- REMOVE EXISTING SHEET VINYL FLOORING AND RUBBER BASE (STAIR SKIRTS TO REMAIN)

DFCM approval

SANDERS ASSOCIATES ARCHITECTS
2668 Grant Avenue
Ogden, UT 84401
t 801.621.7303
www.sandersarch.com

Seal

REGISTERED PROFESSIONAL ARCHITECT
M. SHANE SANDERS
5526503-0301
UTAH

Consultant

Project Name

WSU- MILLER ADMINISTRATION

MEP Upgrades and Remodel

3848 HARRISON BLVD.
OGDEN, UTAH 84401

Issued

No.	Date	Description
1	01.16.15	DFCM PLAN REVIEW
2	02.03.15	BID DOCUMENTS

Revision

No.	Date	Description

DFCM Project No. 14031810

SAA Project No. 214016

Drawing Title

LEVEL TWO DEMOLITION PLAN

Sheet Number

AD101

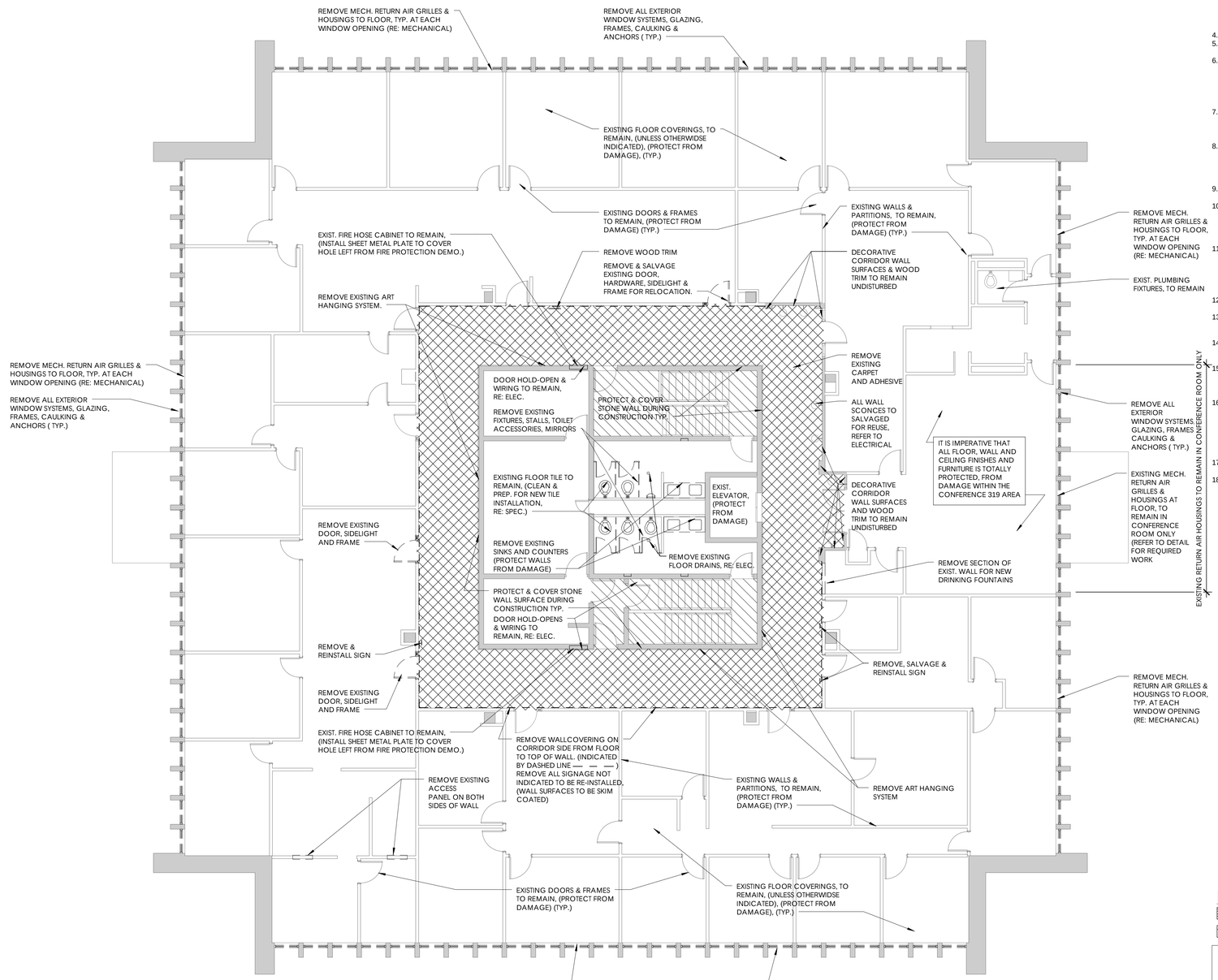

Level Three Demolition Plan

1/8" = 1'-0"

GENERAL DEMOLITION NOTES

1. DEMOLITION WORK WITHIN THE EXISTING BUILDING WILL NOT COMMENCE BEFORE MAY 01, 2015.
2. THE CONTRACTOR TO INSTALL FLEXBOARD OVER ALL FLOOR MATERIAL TO REMAIN, TO PROTECT SURFACES FROM CONSTRUCTION DEBRIS AND PROJECT WORK. 45 MIL MINIMUM THICKNESS. TAPE ALL JOINTS. CLEAN CARPET IF NECESSARY AT COMPLETION OF CONSTRUCTION.
3. THE CONTRACTOR TO MOVE ALL EXISTING FURNITURE A MINIMUM OF (3) FEET FROM WALLS IN EACH ROOM. WRAP THE PERIMETER OF FURNITURE WITH 60 GAUGE STRETCH WRAP FILM A MINIMUM OF (2) WRAPS. COVER FURNITURE TOPS WITH 6 MIL PLASTIC AND WRAP PERIMETER WITH (2) MORE LAYERS OF 60 GAUGE STRETCH WRAP TO SEAL.
4. ALL EXISTING ARTWORK TO BE REMOVED BY WSU.
5. CONTRACTOR TO REMOVE ALL SIGNAGE IN CORRIDORS NOT INDICATED TO BE REINSTALLED. (COORDINATE WITH OWNER).
6. THE CONTRACTOR MUST FIELD VERIFY ALL DIMENSIONS AND CONDITIONS INCLUDING EXISTING UTILITIES PRIOR TO BIDDING AS THE LOCATIONS SHOWN IN THE DOCUMENTS ARE APPROXIMATED. ALL VARIANCES NOT SHOWN IN THE DRAWINGS SHALL BE BROUGHT TO THE ATTENTION OF THE ARCHITECT PRIOR TO BID.
7. CONTRACTOR TO COORDINATE WITH ELECTRICAL, MECHANICAL AND FIRE PROTECTION PLANS FOR LOCATIONS OF ALL EXISTING AND NEW EQUIPMENT, SYSTEMS, AND DEVICES.
8. AS SOME DEMOLITION WORK WILL BE SPECIFIC TO DIVISION 22, 23, 26, THE CONTRACTOR SHALL CROSS REFERENCE WITH ELECTRICAL AND MECHANICAL PLANS FOR ADDITIONAL DEMOLITION WHICH IS REQUIRED, BUT NOT REFLECTED ON ARCHITECTURAL DRAWINGS.
9. INTERIOR WALLS AND PARTITIONS TO REMAIN, UNLESS OTHERWISE INDICATED. (PROTECT FROM DAMAGE).
10. CONTRACTOR SHALL TAKE ALL PRECAUTIONS NECESSARY TO PROTECT THE EXISTING STRUCTURE, FINISHES, AND SITE ELEMENTS NOT CALLED FOR DEMOLITION DURING REMODEL OF WALLS, FLOORING MATERIAL, CASEWORK, DOORS, WINDOWS, CEILINGS, AND SITE.
11. ALL EXISTING INTERIOR FINISHES, MATERIALS, STRUCTURE, SYSTEMS, LANDSCAPING, AND SITE FEATURES, ETC., NOT IDENTIFIED FOR DEMOLITION THAT ARE DAMAGED DURING THE PROCESS OF CONSTRUCTION SHALL BE RESTORED TO THEIR ORIGINAL CONDITION OR REPLACED TO MATCH AT THE CONTRACTORS EXPENSE.
12. CONTRACTOR SHALL REMOVE AND DISPOSE OF ALL FLOORING, WALLS, & CEILING SYSTEMS AS SHOWN ON THE DRAWINGS.
13. ALL EXISTING FINISHED SURFACES DAMAGED DUE TO WORK UNDER THIS CONTRACT SHALL BE PATCHED & FINISHED TO MATCH EXISTING ADJACENT SURFACES.
14. PATCH & LEVEL EXISTING CONCRETE SLABS AS REQUIRED FOR NEW FINISHES WITH FLOOR LEVELING COMPOUND AS APPROVED BY ARCHITECT.
15. THE GENERAL CONTRACTOR SHALL BRING TO THE ATTENTION OF THE ARCHITECT FOR IMMEDIATE RESOLUTION, ANY CODE VIOLATIONS, INCORRECT CONSTRUCTIONS OR SAFETY PROBLEMS THAT ARE EXISTING FIELD CONDITIONS.
16. THE GENERAL CONTRACTOR IS RESPONSIBLE TO COORDINATE SCOPE IN REMODEL AS INDICATED ON ALL ARCHITECTURAL, ELECTRICAL, MECHANICAL, AND FIRE PROTECTION SHEETS AND COORDINATE AND PROVIDE DEMOLITION AS NEEDED. WORK AS DESCRIBED FOR REMODEL THAT IS IN CONFLICT WITH EXISTING CONDITION IS TO BE BROUGHT TO THE ATTENTION OF ARCHITECT PRIOR TO DEMOLITION.
17. REMOVE EXISTING RED IRON CEILING TILE SUSPENDED GRID SUPPORT SYSTEM.
18. EXISTING METAL SUSPENDED GRID PERIMETER WALL ANGLES CAN BE REUSED IF IN GOOD CONDITION AND NOT DAMAGED FROM DEMOLITION. PROVIDE ADDITIONAL ANCHORAGE SUPPORT FOR NEW SEISMIC CLIPS WHERE REQUIRED FOR NEW GRID SYSTEM.

DEMOLITION PLAN LEGEND

- REMOVE EXISTING CARPET AND ADHESIVE
- REMOVE EXISTING SHEET VINYL FLOORING AND RUBBER BASE (STAIR SKIRTS TO REMAIN)

DFCM approval

SANDERS ASSOCIATES ARCHITECTS
2668 Grant Avenue
Ogden, UT 84401
t 801.621.7303
www.sandersarch.com

Seal

REGISTERED PROFESSIONAL ARCHITECT
M. SHANE SANDERS
5526353-0301
UTAH

Consultant

Project Name

WSU- MILLER ADMINISTRATION

MEP Upgrades and Remodel

3848 HARRISON BLVD.
OGDEN, UTAH 84401

Issued

No.	Date	Description
1	01.16.15	DFCM PLAN REVIEW
2	02.03.15	BID DOCUMENTS

Revision

No.	Date	Description

DFCM Project No. 14031810

SAA Project No. 214016

Drawing Title

LEVEL THREE DEMOLITION PLAN

Sheet Number

AD102

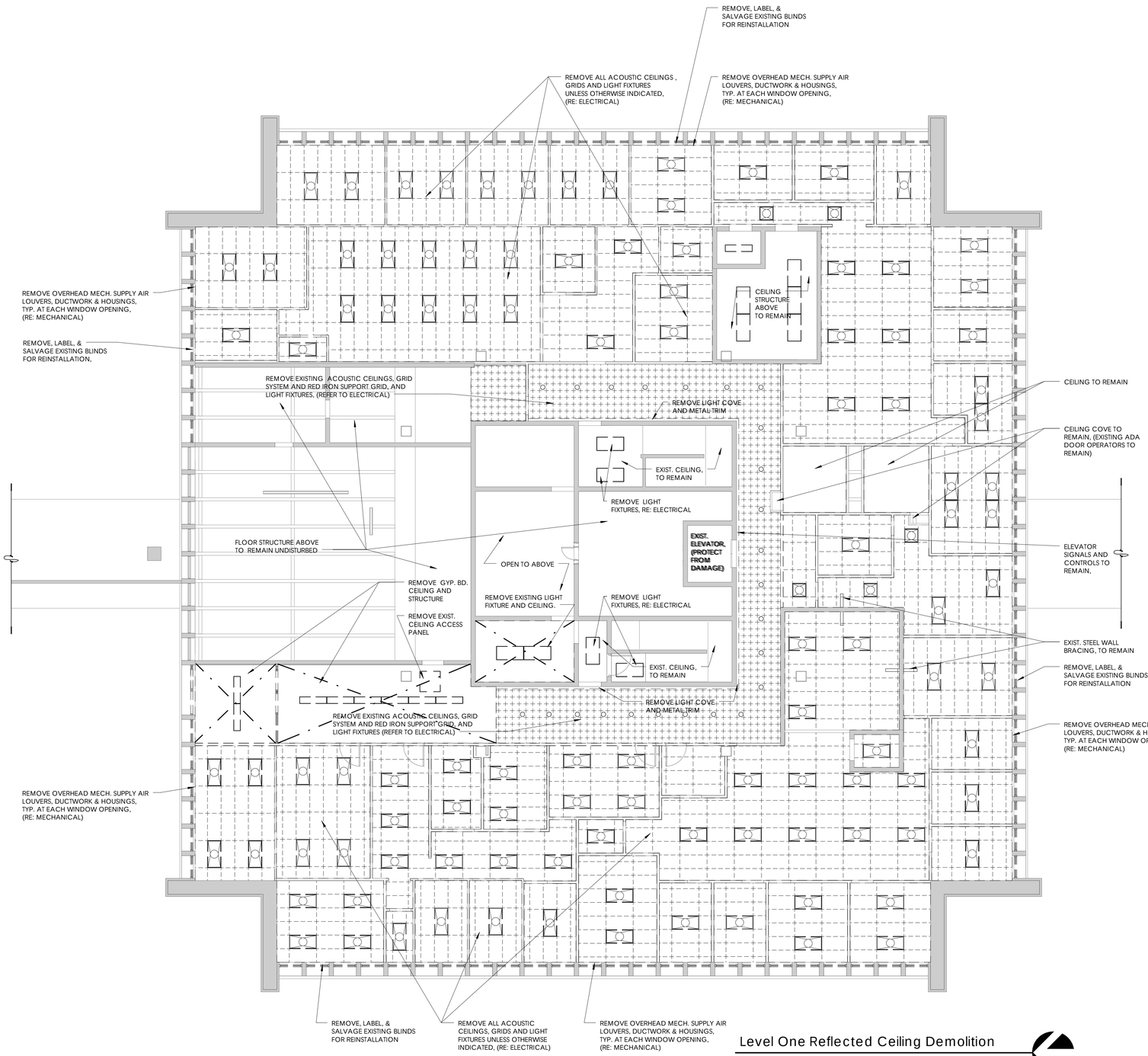

Level One Reflected Ceiling Demolition

1/8" = 1'-0"

GENERAL DEMOLITION NOTES

1. DEMOLITION WORK WITHIN THE EXISTING BUILDING WILL NOT COMMENCE BEFORE MAY 01, 2015.
2. THE CONTRACTOR TO INSTALL FLEXBOARD OVER ALL FLOOR MATERIAL TO REMAIN, TO PROTECT SURFACES FROM CONSTRUCTION DEBRIS AND PROJECT WORK. 45 MIL MINIMUM THICKNESS. TAPE ALL JOINTS. CLEAN CARPET IF NECESSARY AT COMPLETION OF CONSTRUCTION.
3. THE CONTRACTOR TO MOVE ALL EXISTING FURNITURE A MINIMUM OF (3) FEET FROM WALLS IN EACH ROOM. WRAP THE PERIMETER OF FURNITURE WITH 60 GAUGE STRETCH WRAP FILM A MINIMUM OF (2) WRAPS. COVER FURNITURE TOPS WITH 6 MIL PLASTIC AND WRAP PERIMETER WITH (2) MORE LAYERS OF 60 GAUGE STRETCH WRAP TO SEAL.
4. ALL EXISTING ARTWORK TO BE REMOVED BY WSU.
5. CONTRACTOR TO REMOVE ALL SIGNAGE IN CORRIDORS NOT INDICATED TO BE REINSTALLED. (COORDINATE WITH OWNER).
6. THE CONTRACTOR MUST FIELD VERIFY ALL DIMENSIONS AND CONDITIONS INCLUDING EXISTING UTILITIES PRIOR TO BIDDING AS THE LOCATIONS SHOWN IN THE DOCUMENTS ARE APPROXIMATED. ALL VARIANCES NOT SHOWN IN THE DRAWINGS SHALL BE BROUGHT TO THE ATTENTION OF THE ARCHITECT PRIOR TO BID.
7. CONTRACTOR TO COORDINATE WITH ELECTRICAL, MECHANICAL AND FIRE PROTECTION PLANS FOR LOCATIONS OF ALL EXISTING AND NEW EQUIPMENT, SYSTEMS, AND DEVICES.
8. AS SOME DEMOLITION WORK WILL BE SPECIFIC TO DIVISION 22, 23, 26, THE CONTRACTOR SHALL CROSS REFERENCE WITH ELECTRICAL AND MECHANICAL PLANS FOR ADDITIONAL DEMOLITION WHICH IS REQUIRED, BUT NOT REFLECTED ON ARCHITECTURAL DRAWINGS.
9. INTERIOR WALLS AND PARTITIONS TO REMAIN, UNLESS OTHERWISE INDICATED. (PROTECT FROM DAMAGE).
10. CONTRACTOR SHALL TAKE ALL PRECAUTIONS NECESSARY TO PROTECT THE EXISTING STRUCTURE, FINISHES, AND SITE ELEMENTS NOT CALLED FOR DEMOLITION DURING REMODEL OF WALLS, FLOORING MATERIAL, CASEWORK, DOORS, WINDOWS, CEILINGS, AND SITE.
11. ALL EXISTING INTERIOR FINISHES, MATERIALS, STRUCTURE, SYSTEMS, LANDSCAPING, AND SITE FEATURES, ETC., NOT IDENTIFIED FOR DEMOLITION THAT ARE DAMAGED DURING THE PROCESS OF CONSTRUCTION SHALL BE RESTORED TO THEIR ORIGINAL CONDITION OR REPLACED TO MATCH AT THE CONTRACTORS EXPENSE.
12. CONTRACTOR SHALL REMOVE AND DISPOSE OF ALL FLOORING, WALLS, & CEILING SYSTEMS AS SHOWN ON THE DRAWINGS.
13. ALL EXISTING FINISHED SURFACES DAMAGED DUE TO WORK UNDER THIS CONTRACT SHALL BE PATCHED & FINISHED TO MATCH EXISTING ADJACENT SURFACES.
14. PATCH & LEVEL EXISTING CONCRETE SLABS AS REQUIRED FOR NEW FINISHES WITH FLOOR LEVELING COMPOUND AS APPROVED BY ARCHITECT.
15. THE GENERAL CONTRACTOR SHALL BRING TO THE ATTENTION OF THE ARCHITECT FOR IMMEDIATE RESOLUTION, ANY CODE VIOLATIONS, INCORRECT CONSTRUCTIONS OR SAFETY PROBLEMS THAT ARE EXISTING FIELD CONDITIONS.
16. THE GENERAL CONTRACTOR IS RESPONSIBLE TO COORDINATE SCOPE IN REMODEL AS INDICATED ON ALL ARCHITECTURAL, ELECTRICAL, MECHANICAL, AND FIRE PROTECTION SHEETS AND COORDINATE AND PROVIDE DEMOLITION AS NEEDED. WORK AS DESCRIBED FOR REMODEL THAT IS IN CONFLICT WITH EXISTING CONDITION IS TO BE BROUGHT TO THE ATTENTION OF ARCHITECT PRIOR TO DEMOLITION.
17. REMOVE EXISTING RED IRON CEILING TILE SUSPENDED GRID SUPPORT SYSTEM.
18. EXISTING METAL SUSPENDED GRID PERIMETER WALL ANGLES CAN BE REUSED IF IN GOOD CONDITION AND NOT DAMAGED FROM DEMOLITION. PROVIDE ADDITIONAL ANCHORAGE SUPPORT FOR NEW SEISMIC CLIPS WHERE REQUIRED FOR NEW GRID SYSTEM.

DFCM approval

SANDERS ASSOCIATES ARCHITECTS
2668 Grant Avenue
Ogden, UT 84401
t 801.621.7303
www.sandersarch.com

Seal

REGISTERED PROFESSIONAL ARCHITECT
M. SHANE SANDERS
5294503-0301
UTAH

Consultant

Project Name

WSU- MILLER ADMINISTRATION

MEP Upgrades and Remodel

3848 HARRISON BLVD.
OGDEN, UTAH 84401

Issued

No.	Date	Description
1	01.16.15	DFCM PLAN REVIEW
2	02.03.15	BID DOCUMENTS

Revision

No.	Date	Description

DFCM Project No. 14031810

SAA Project No. 214016

Drawing Title

LEVEL ONE REFLECTED CEILING DEMOLITION PLAN

Sheet Number

AD110

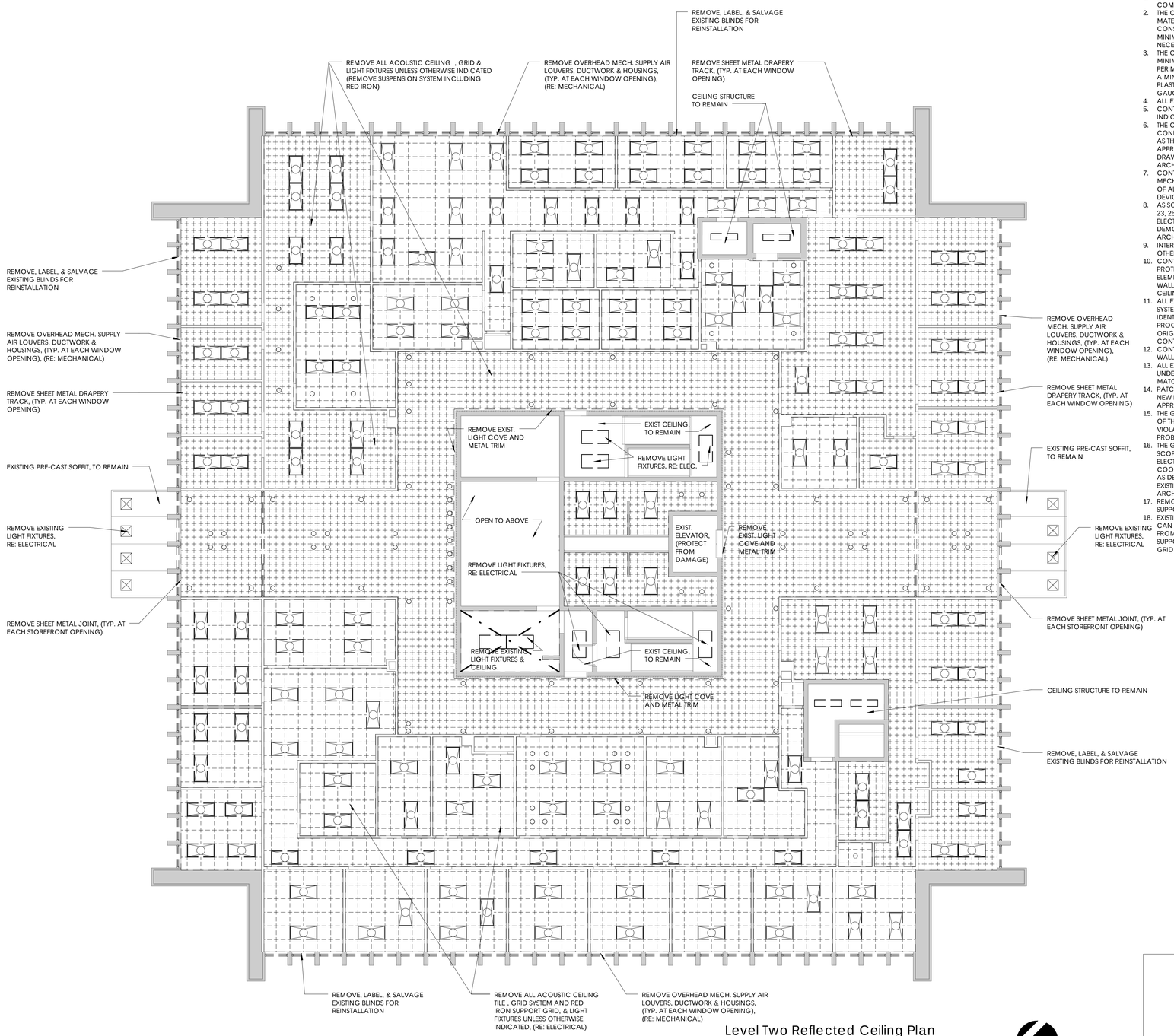

Level Two Reflected Ceiling Plan

1/8" = 1'-0"

GENERAL DEMOLITION NOTES

1. DEMOLITION WORK WITHIN THE EXISTING BUILDING WILL NOT COMMENCE BEFORE MAY 01, 2015.
2. THE CONTRACTOR TO INSTALL FLEXBOARD OVER ALL FLOOR MATERIAL TO REMAIN, TO PROTECT SURFACES FROM CONSTRUCTION DEBRIS AND PROJECT WORK. 45 MIL MINIMUM THICKNESS. TAPE ALL JOINTS. CLEAN CARPET IF NECESSARY AT COMPLETION OF CONSTRUCTION.
3. THE CONTRACTOR TO MOVE ALL EXISTING FURNITURE A MINIMUM OF (3) FEET FROM WALLS IN EACH ROOM. WRAP THE PERIMETER OF FURNITURE WITH 60 GAUGE STRETCH WRAP FILM A MINIMUM OF (2) WRAPS. COVER FURNITURE TOPS WITH 6 MIL PLASTIC AND WRAP PERIMETER WITH (2) MORE LAYERS OF 60 GAUGE STRETCH WRAP TO SEAL.
4. ALL EXISTING ARTWORK TO BE REMOVED BY WSU.
5. CONTRACTOR TO REMOVE ALL SIGNAGE IN CORRIDORS NOT INDICATED TO BE REINSTALLED. (COORDINATE WITH OWNER).
6. THE CONTRACTOR MUST FIELD VERIFY ALL DIMENSIONS AND CONDITIONS INCLUDING EXISTING UTILITIES PRIOR TO BIDDING AS THE LOCATIONS SHOWN IN THE DOCUMENTS ARE APPROXIMATED. ALL VARIANCES NOT SHOWN IN THE DRAWINGS SHALL BE BROUGHT TO THE ATTENTION OF THE ARCHITECT PRIOR TO BID.
7. CONTRACTOR TO COORDINATE WITH ELECTRICAL, MECHANICAL AND FIRE PROTECTION PLANS FOR LOCATIONS OF ALL EXISTING AND NEW EQUIPMENT, SYSTEMS, AND DEVICES.
8. AS SOME DEMOLITION WORK WILL BE SPECIFIC TO DIVISION 22, 23, 26, THE CONTRACTOR SHALL CROSS REFERENCE WITH ELECTRICAL AND MECHANICAL PLANS FOR ADDITIONAL DEMOLITION WHICH IS REQUIRED, BUT NOT REFLECTED ON ARCHITECTURAL DRAWINGS.
9. INTERIOR WALLS AND PARTITIONS TO REMAIN, UNLESS OTHERWISE INDICATED. (PROTECT FROM DAMAGE).
10. CONTRACTOR SHALL TAKE ALL PRECAUTIONS NECESSARY TO PROTECT THE EXISTING STRUCTURE, FINISHES, AND SITE ELEMENTS NOT CALLED FOR DEMOLITION DURING REMODEL OF WALLS, FLOORING MATERIAL, CASEWORK, DOORS, WINDOWS, CEILINGS, AND SITE.
11. ALL EXISTING INTERIOR FINISHES, MATERIALS, STRUCTURE, SYSTEMS, LANDSCAPING, AND SITE FEATURES, ETC., NOT IDENTIFIED FOR DEMOLITION THAT ARE DAMAGED DURING THE PROCESS OF CONSTRUCTION SHALL BE RESTORED TO THEIR ORIGINAL CONDITION OR REPLACED TO MATCH AT THE CONTRACTORS EXPENSE.
12. CONTRACTOR SHALL REMOVE AND DISPOSE OF ALL FLOORING, WALLS, & CEILING SYSTEMS AS SHOWN ON THE DRAWINGS.
13. ALL EXISTING FINISHED SURFACES DAMAGED DUE TO WORK UNDER THIS CONTRACT SHALL BE PATCHED & FINISHED TO MATCH EXISTING ADJACENT SURFACES.
14. PATCH & LEVEL EXISTING CONCRETE SLABS AS REQUIRED FOR NEW FINISHES WITH FLOOR LEVELING COMPOUND AS APPROVED BY ARCHITECT.
15. THE GENERAL CONTRACTOR SHALL BRING TO THE ATTENTION OF THE ARCHITECT FOR IMMEDIATE RESOLUTION, ANY CODE VIOLATIONS, INCORRECT CONSTRUCTIONS OR SAFETY PROBLEMS THAT ARE EXISTING FIELD CONDITIONS.
16. THE GENERAL CONTRACTOR IS RESPONSIBLE TO COORDINATE SCOPE IN REMODEL AS INDICATED ON ALL ARCHITECTURAL, ELECTRICAL, MECHANICAL, AND FIRE PROTECTION SHEETS AND COORDINATE AND PROVIDE DEMOLITION AS NEEDED. WORK AS DESCRIBED FOR REMODEL THAT IS IN CONFLICT WITH EXISTING CONDITION IS TO BE BROUGHT TO THE ATTENTION OF ARCHITECT PRIOR TO DEMOLITION.
17. REMOVE EXISTING RED IRON CEILING TILE SUSPENDED GRID SUPPORT SYSTEM.
18. EXISTING METAL SUSPENDED GRID PERIMETER WALL ANGLES CAN BE REUSED IF IN GOOD CONDITION AND NOT DAMAGED FROM DEMOLITION. PROVIDE ADDITIONAL ANCHORAGE SUPPORT FOR NEW SEISMIC CLIPS WHERE REQUIRED FOR NEW GRID SYSTEM.

DFCM approval

SANDERS ASSOCIATES ARCHITECTS
2668 Grant Avenue
Ogden, UT 84401
t 801.621.7303
www.sandersarch.com

Seal

REGISTERED PROFESSIONAL ARCHITECT
M. SHANE SANDERS
5024503-0301
UTAH

Consultant

Project Name

WSU- MILLER ADMINISTRATION

MEP Upgrades and Remodel

3848 HARRISON BLVD.
OGDEN, UTAH 84401

Issued

No.	Date	Description
1	01.16.15	DFCM PLAN REVIEW
2	02.03.15	BID DOCUMENTS

Revision

No.	Date	Description

DFCM Project No. 14031810

SAA Project No. 214016

Drawing Title

LEVEL TWO REFLECTED CEILING DEMOLITION PLAN

Sheet Number

AD111

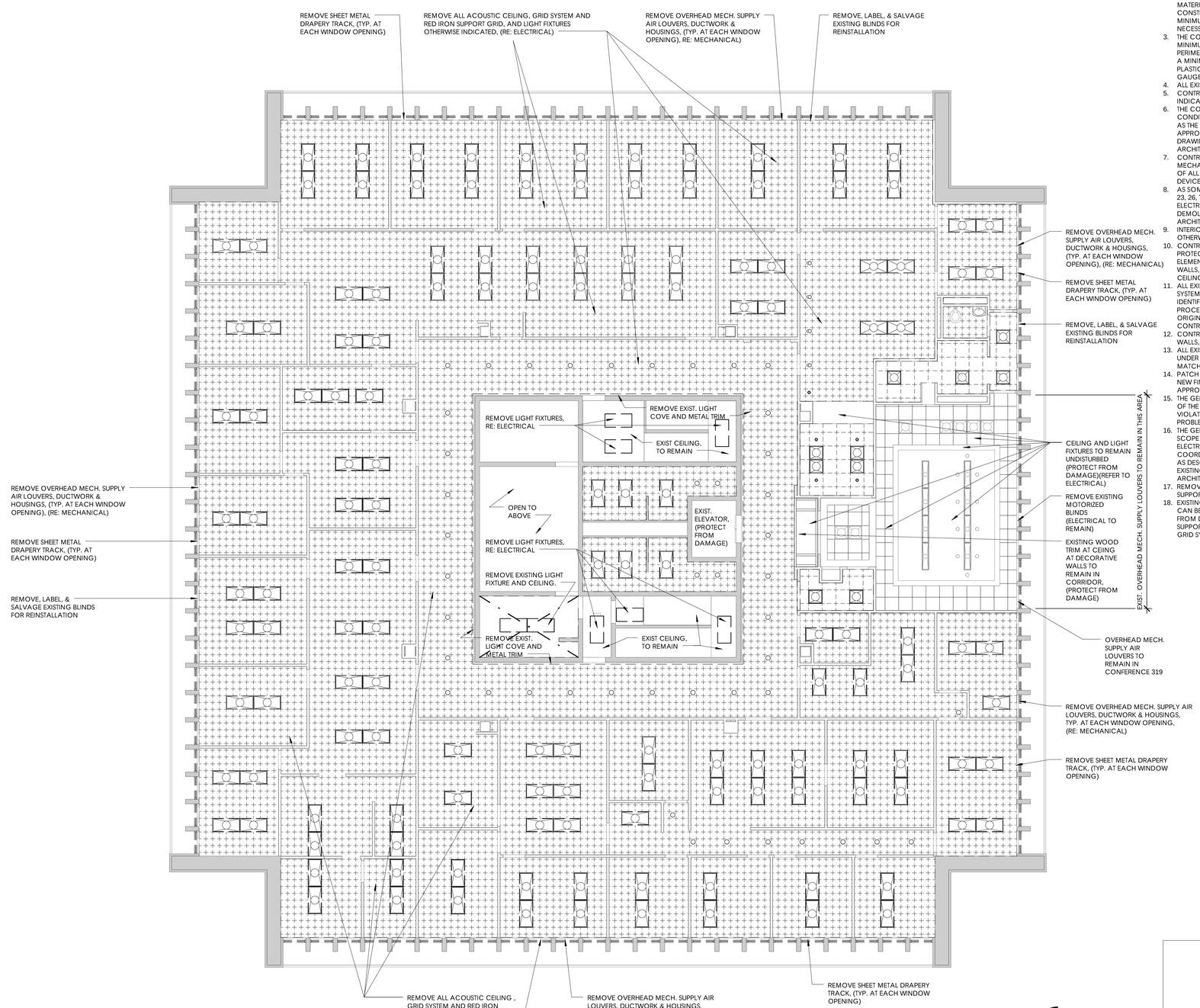

Level Three Reflected Ceiling Demolition

1/8" = 1'-0"

GENERAL DEMOLITION NOTES

1. DEMOLITION WORK WITHIN THE EXISTING BUILDING WILL NOT COMMENCE BEFORE MAY 01, 2015.
2. THE CONTRACTOR TO INSTALL FLEXBOARD OVER ALL FLOOR MATERIAL TO REMAIN, TO PROTECT SURFACES FROM CONSTRUCTION DEBRIS AND PROJECT WORK. 45 MIL MINIMUM THICKNESS. TAPE ALL JOINTS. CLEAN CARPET IF NECESSARY AT COMPLETION OF CONSTRUCTION.
3. THE CONTRACTOR TO MOVE ALL EXISTING FURNITURE A MINIMUM OF (3) FEET FROM WALLS IN EACH ROOM. WRAP THE PERIMETER OF FURNITURE WITH 60 GAUGE STRETCH WRAP FILM A MINIMUM OF (2) WRAPS. COVER FURNITURE TOPS WITH 6 MIL PLASTIC AND WRAP PERIMETER WITH (2) MORE LAYERS OF 60 GAUGE STRETCH WRAP TO SEAL.
4. ALL EXISTING ARTWORK TO BE REMOVED BY WSU.
5. CONTRACTOR TO REMOVE ALL SIGNAGE IN CORRIDORS NOT INDICATED TO BE REINSTALLED. (COORDINATE WITH OWNER).
6. THE CONTRACTOR MUST FIELD VERIFY ALL DIMENSIONS AND CONDITIONS INCLUDING EXISTING UTILITIES PRIOR TO BIDDING AS THE LOCATIONS SHOWN IN THE DOCUMENTS ARE APPROXIMATED. ALL VARIANCES NOT SHOWN IN THE DRAWINGS SHALL BE BROUGHT TO THE ATTENTION OF THE ARCHITECT PRIOR TO BID.
7. CONTRACTOR TO COORDINATE WITH ELECTRICAL, MECHANICAL AND FIRE PROTECTION PLANS FOR LOCATIONS OF ALL EXISTING AND NEW EQUIPMENT, SYSTEMS, AND DEVICES.
8. AS SOME DEMOLITION WORK WILL BE SPECIFIC TO DIVISION 22, 23, 26, THE CONTRACTOR SHALL CROSS REFERENCE WITH ELECTRICAL AND MECHANICAL PLANS FOR ADDITIONAL DEMOLITION WHICH IS REQUIRED, BUT NOT REFLECTED ON ARCHITECTURAL DRAWINGS.
9. INTERIOR WALLS AND PARTITIONS TO REMAIN, UNLESS OTHERWISE INDICATED. (PROTECT FROM DAMAGE).
10. CONTRACTOR SHALL TAKE ALL PRECAUTIONS NECESSARY TO PROTECT THE EXISTING STRUCTURE, FINISHES, AND SITE ELEMENTS NOT CALLED FOR DEMOLITION DURING REMODEL OF WALLS, FLOORING MATERIAL, CASEWORK, DOORS, WINDOWS, CEILINGS, AND SITE.
11. ALL EXISTING INTERIOR FINISHES, MATERIALS, STRUCTURE, SYSTEMS, LANDSCAPING, AND SITE FEATURES, ETC., NOT IDENTIFIED FOR DEMOLITION THAT ARE DAMAGED DURING THE PROCESS OF CONSTRUCTION SHALL BE RESTORED TO THEIR ORIGINAL CONDITION OR REPLACED TO MATCH AT THE CONTRACTORS EXPENSE.
12. CONTRACTOR SHALL REMOVE AND DISPOSE OF ALL FLOORING, WALLS, & CEILING SYSTEMS AS SHOWN ON THE DRAWINGS.
13. ALL EXISTING FINISHED SURFACES DAMAGED DUE TO WORK UNDER THIS CONTRACT SHALL BE PATCHED & FINISHED TO MATCH EXISTING ADJACENT SURFACES.
14. PATCH & LEVEL EXISTING CONCRETE SLABS AS REQUIRED FOR NEW FINISHES WITH FLOOR LEVELING COMPOUND AS APPROVED BY ARCHITECT.
15. THE GENERAL CONTRACTOR SHALL BRING TO THE ATTENTION OF THE ARCHITECT FOR IMMEDIATE RESOLUTION, ANY CODE VIOLATIONS, INCORRECT CONSTRUCTIONS OR SAFETY PROBLEMS THAT ARE EXISTING FIELD CONDITIONS.
16. THE GENERAL CONTRACTOR IS RESPONSIBLE TO COORDINATE SCOPE IN REMODEL AS INDICATED ON ALL ARCHITECTURAL, ELECTRICAL, MECHANICAL, AND FIRE PROTECTION SHEETS AND COORDINATE AND PROVIDE DEMOLITION AS NEEDED. WORK AS DESCRIBED FOR REMODEL THAT IS IN CONFLICT WITH EXISTING CONDITION IS TO BE BROUGHT TO THE ATTENTION OF ARCHITECT PRIOR TO DEMOLITION.
17. REMOVE EXISTING RED IRON CEILING TILE SUSPENDED GRID SUPPORT SYSTEM.
18. EXISTING METAL SUSPENDED GRID PERIMETER WALL ANGLES CAN BE REUSED IF IN GOOD CONDITION AND NOT DAMAGED FROM DEMOLITION. PROVIDE ADDITIONAL ANCHORAGE SUPPORT FOR NEW SEISMIC CLIPS WHERE REQUIRED FOR NEW GRID SYSTEM.

DFCM approval

SANDERS ASSOCIATES ARCHITECTS
2668 Grant Avenue
Ogden, UT 84401
t 801.621.7303
www.sandersarch.com

Seal

REGISTERED PROFESSIONAL ARCHITECT
M. SHANE SANDERS
5024503-0301
UTAH

Consultant

Project Name

WSU- MILLER ADMINISTRATION

MEP Upgrades and Remodel

3848 HARRISON BLVD.
OGDEN, UTAH 84401

Issued

No.	Date	Description
1	01.16.15	DFCM PLAN REVIEW
2	02.03.15	BID DOCUMENTS

Revision

No.	Date	Description

DFCM Project No. 14031810

SAA Project No. 214016

Drawing Title

LEVEL THREE REFLECTED CEILING DEMOLITION PLAN

Sheet Number

AD112

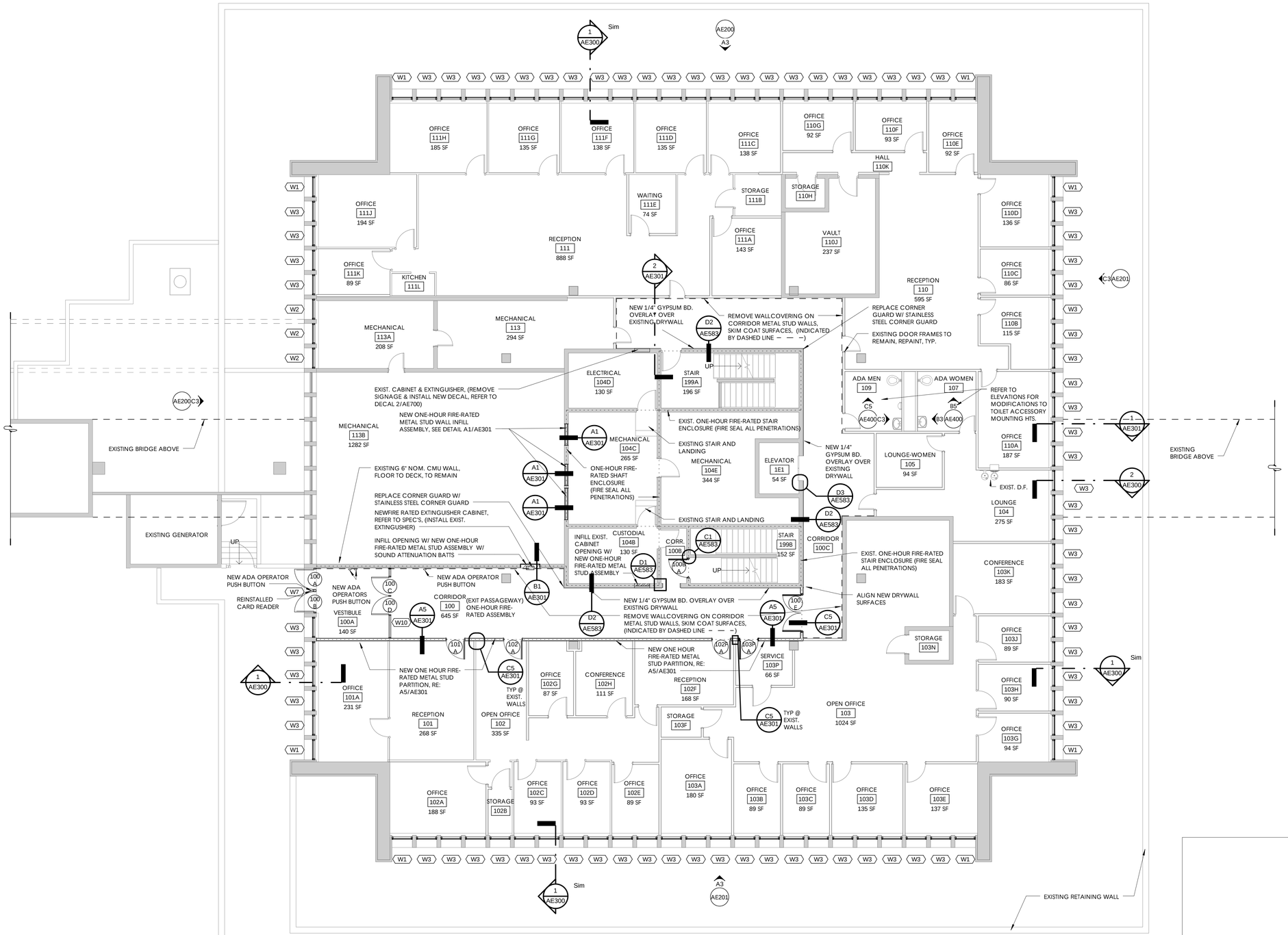

Level One Floor Plan

1/8" = 1'-0"

DFCM approval

SANDERS ASSOCIATES ARCHITECTS
2668 Grant Avenue
Ogden, UT 84401
: 801.621.7303
www.sandersarch.com

Seal

REGISTERED PROFESSIONAL ARCHITECT
M. SHANE SANDERS
5526503-0301
UTAH

Consultant

Project Name

WSU- MILLER ADMINISTRATION

MEP Upgrades and Remodel

3848 HARRISON BLVD.
OGDEN, UTAH 84401

Issued

No.	Date	Description
1	01.16.15	DFCM PLAN REVIEW
2	02.03.15	BID DOCUMENTS

Revision

No.	Date	Description

DFCM Project No. 14031810

SAA Project No. 214016

Drawing Title

LEVEL ONE FLOOR PLAN

Sheet Number

AE100

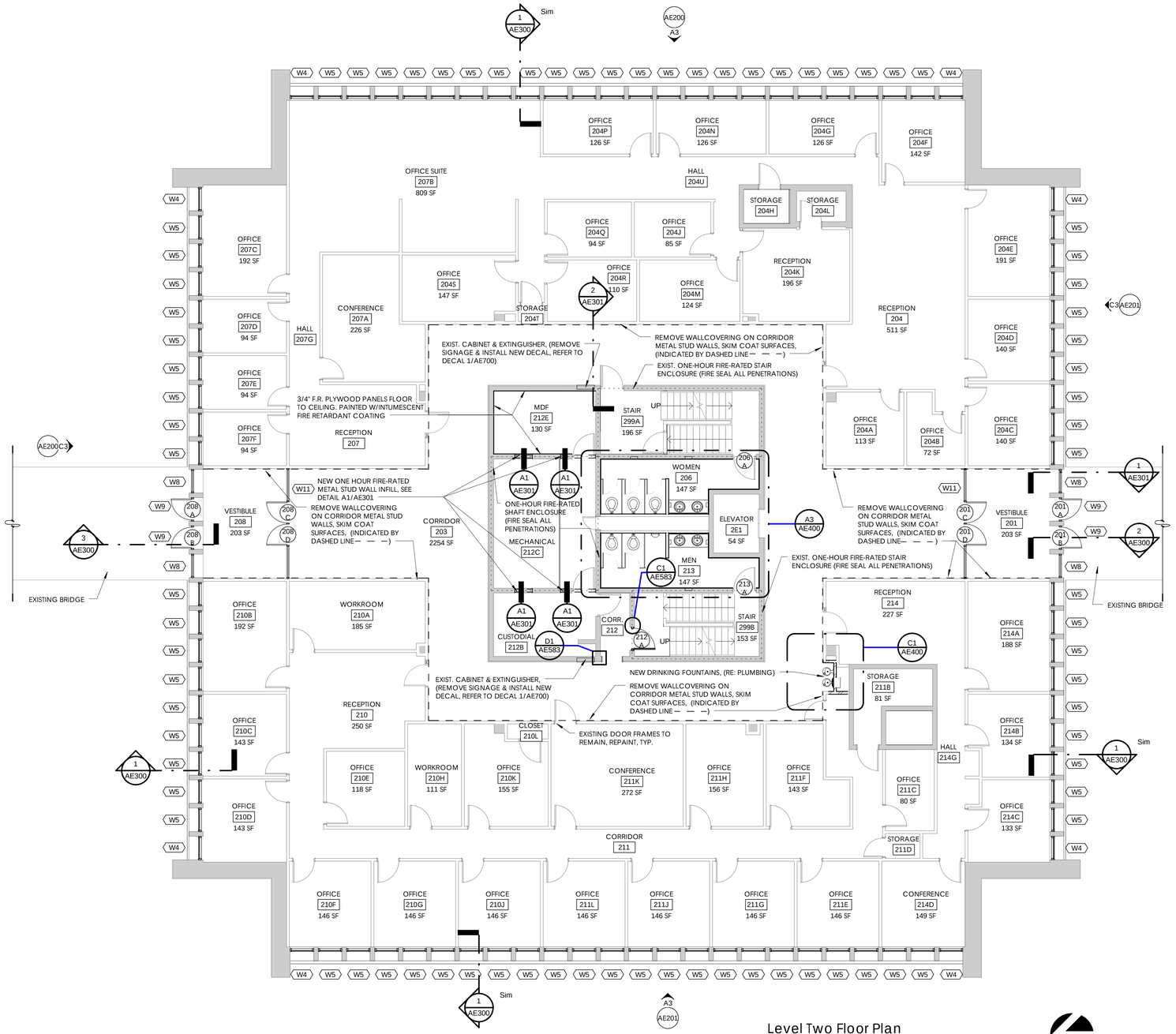

Level Two Floor Plan

1/8" = 1'-0"

SANDERS ASSOCIATES ARCHITECTS
2668 Grant Avenue
Ogden, UT 84401
t 801.621.7303
www.sandersarch.com

Seal

REGISTERED PROFESSIONAL ARCHITECT
M. SHANE SANDERS
5024553-0301
UTAH

Consultant

Project Name

WSU- MILLER ADMINISTRATION

MEP Upgrades and Remodel

3848 HARRISON BLVD.
OGDEN, UTAH 84401

Issued

No.	Date	Description
1	01.16.15	DFCM PLAN REVIEW
2	02.03.15	BID DOCUMENTS

Revision

No.	Date	Description

DFCM Project No. 14031810

SAA Project No. 214016

Drawing Title

LEVEL TWO FLOOR PLAN

Sheet Number

AE101

DFCM approval

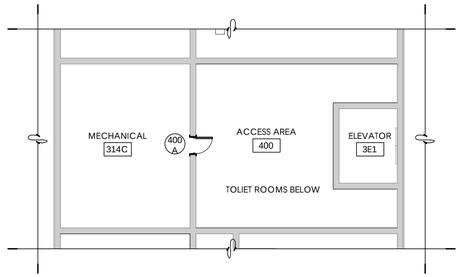

2 Access Area Floor Plan

1/8" = 1'-0"

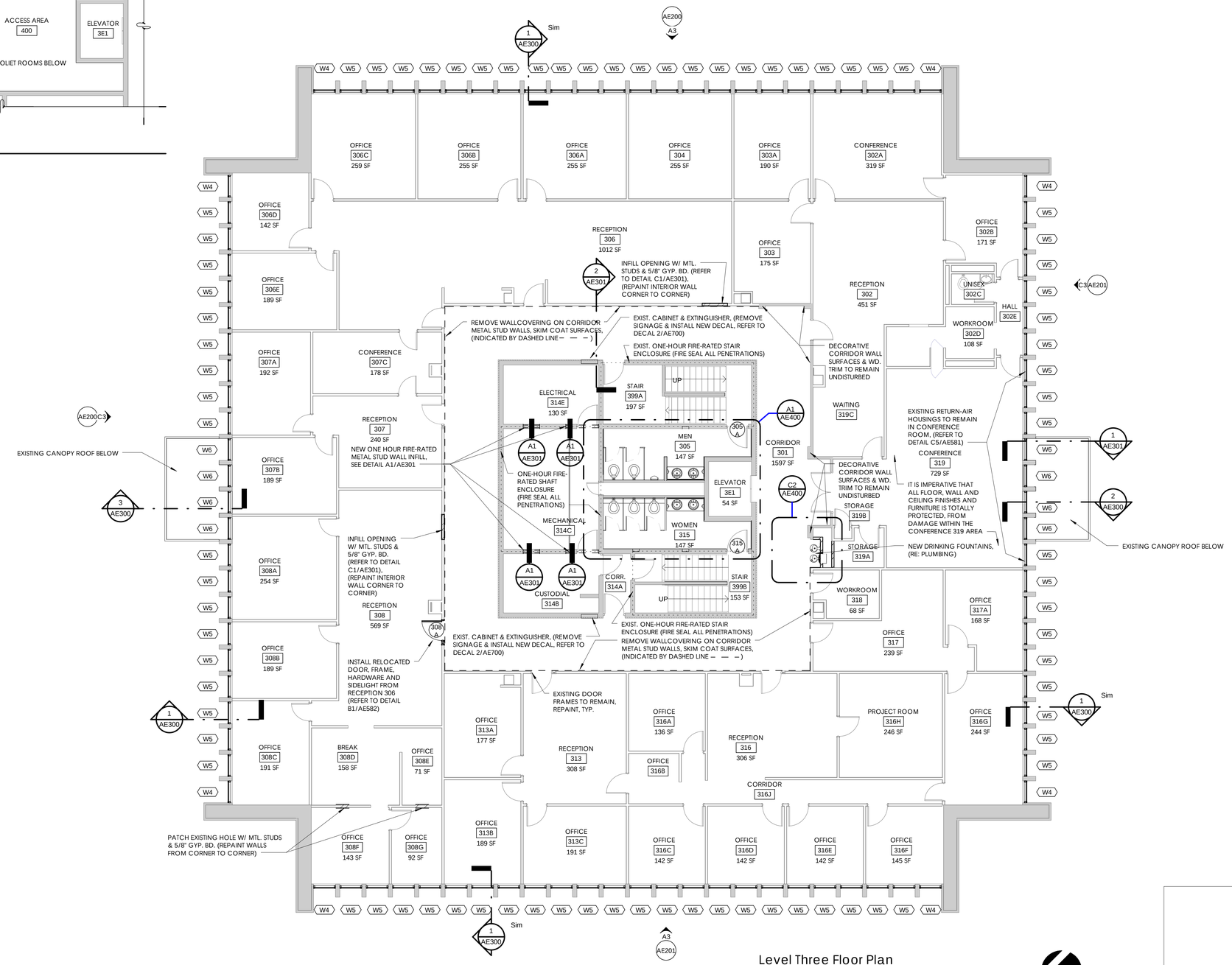

Level Three Floor Plan

1/8" = 1'-0"

SANDERS ASSOCIATES ARCHITECTS
2668 Grant Avenue
Ogden, UT 84401
t 801.621.7303
www.sandersarch.com

Seal

REGISTERED PROFESSIONAL ARCHITECT
M. SHANE SANDERS
5024553-0301
UTAH

Consultant

Project Name

WSU- MILLER ADMINISTRATION

MEP Upgrades and Remodel

3848 HARRISON BLVD.
OGDEN, UTAH 84401

Issued

No.	Date	Description
1	01.16.15	DFCM PLAN REVIEW
2	02.03.15	BID DOCUMENTS

Revision

No.	Date	Description

DFCM Project No. 14031810

SAA Project No. 214016

Drawing Title

LEVEL THREE FLOOR PLAN

Sheet Number

AE102

DFCM approval

GENERAL CEILING NOTES

1. REFER TO ARCHITECTURAL DRAWINGS FOR LOCATIONS OF MECHANICAL GRILLES AND LIGHT FIXTURES. REFER TO MECHANICAL AND ELECTRICAL DRAWINGS FOR QUANTITIES AND TYPES.
2. ALL CEILING HEIGHTS ARE ELEVATIONS ABOVE TOP OF CONCRETE FLOOR SLAB.
3. REFER TO DRAWING SHEET AE582 FOR TOP OF WALL. (CEILING DETAILS)

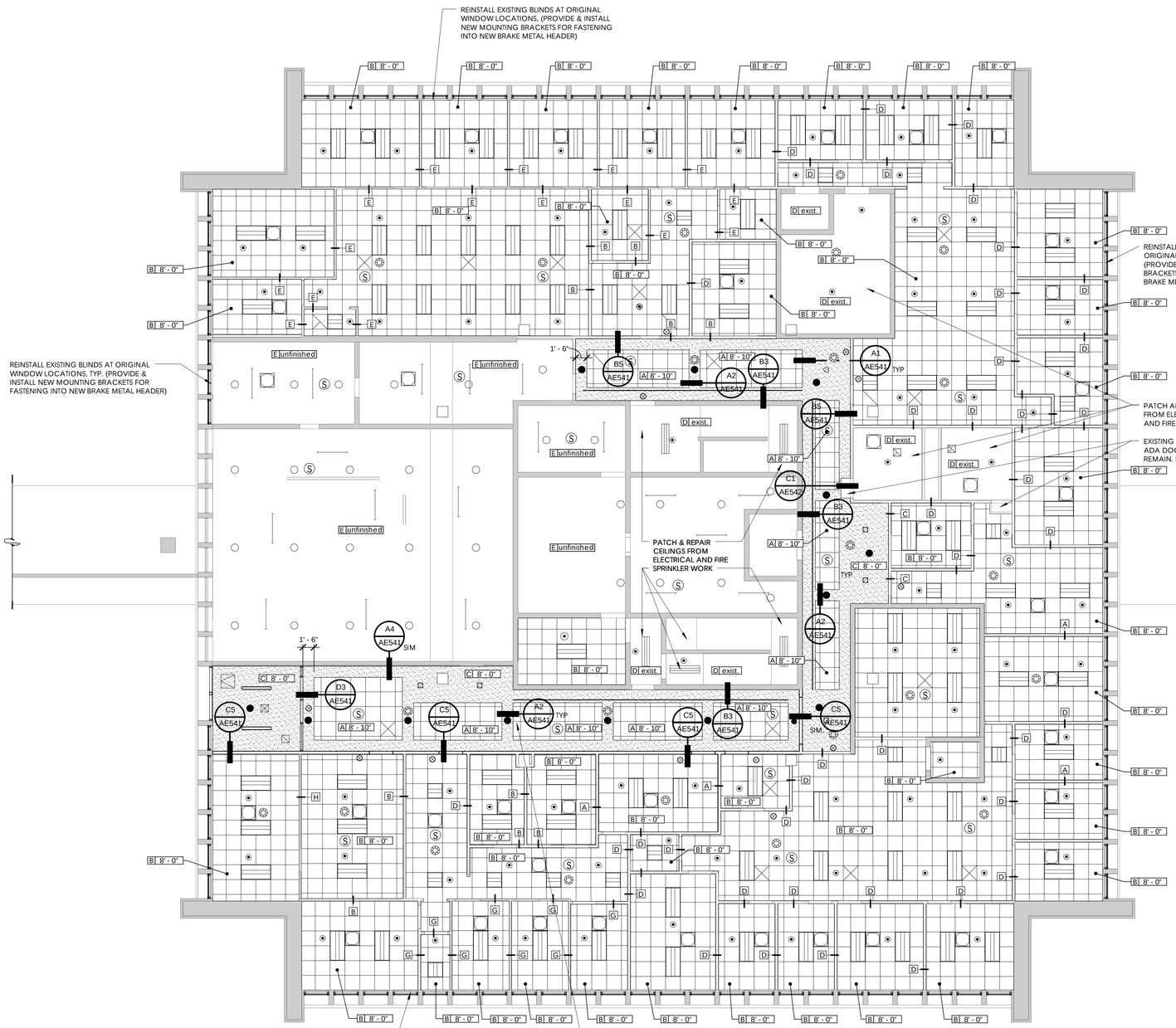

CEILING PLAN LEGEND

CLG. TYPE
CLG. HEIGHT

TYPE A — 2' X 2' LAY-IN ACOUSTICAL TILE IN SUSPENDED GRID (FINISH AC-1)

TYPE B — 2' X 2' LAY-IN ACOUSTICAL TILE IN SUSPENDED GRID (FINISH AC-2)

TYPE C — 5/8" GYPSUM BOARD (PAINTED)

TYPE D — EXISTING CEILING (PAINTED)

TYPE E — UNFINISHED

A — REFER TO SHEET AE582 FOR TOP OF WALL/CEILING DETAILS

MECHANICAL EQUIPMENT (REFER TO MECHANICAL)

LIGHT FIXTURES (REFER TO ELECTRICAL)

FIRE SPRINKLER HEAD (REFER TO FIRE PROTECTION)

CEILING ACCESS DOOR

Level One Reflected Ceiling Plan

1/8" = 1'-0"

DFCM approval

SANDERS ASSOCIATES ARCHITECTS
2668 Grant Avenue
Ogden, UT 84401
t 801.621.7303
www.sandersarch.com

Seal

REGISTERED PROFESSIONAL ARCHITECT
M. SHANE SANDERS
5526583-0301
UTAH

Consultant

Project Name

WSU- MILLER ADMINISTRATION

MEP Upgrades and Remodel

3848 HARRISON BLVD.
OGDEN, UTAH 84401

Issued

No.	Date	Description
1	01.16.15	DFCM PLAN REVIEW
2	02.03.15	BID DOCUMENTS

Revision

No.	Date	Description

DFCM Project No. 14031810

SAA Project No. 214016

Drawing Title

LEVEL 1 REFLECTED CEILING PLAN

Sheet Number

AE120

GENERAL CEILING NOTES

1. REFER TO ARCHITECTURAL DRAWINGS FOR LOCATIONS OF MECHANICAL GRILLES AND LIGHT FIXTURES. REFER TO MECHANICAL AND ELECTRICAL DRAWINGS FOR QUANTITIES AND TYPES.
2. ALL CEILING HEIGHTS ARE ELEVATIONS ABOVE TOP OF CONCRETE FLOOR SLAB.
3. REFER TO DRAWING SHEET AE582 FOR TOP OF WALL. (CEILING DETAILS)

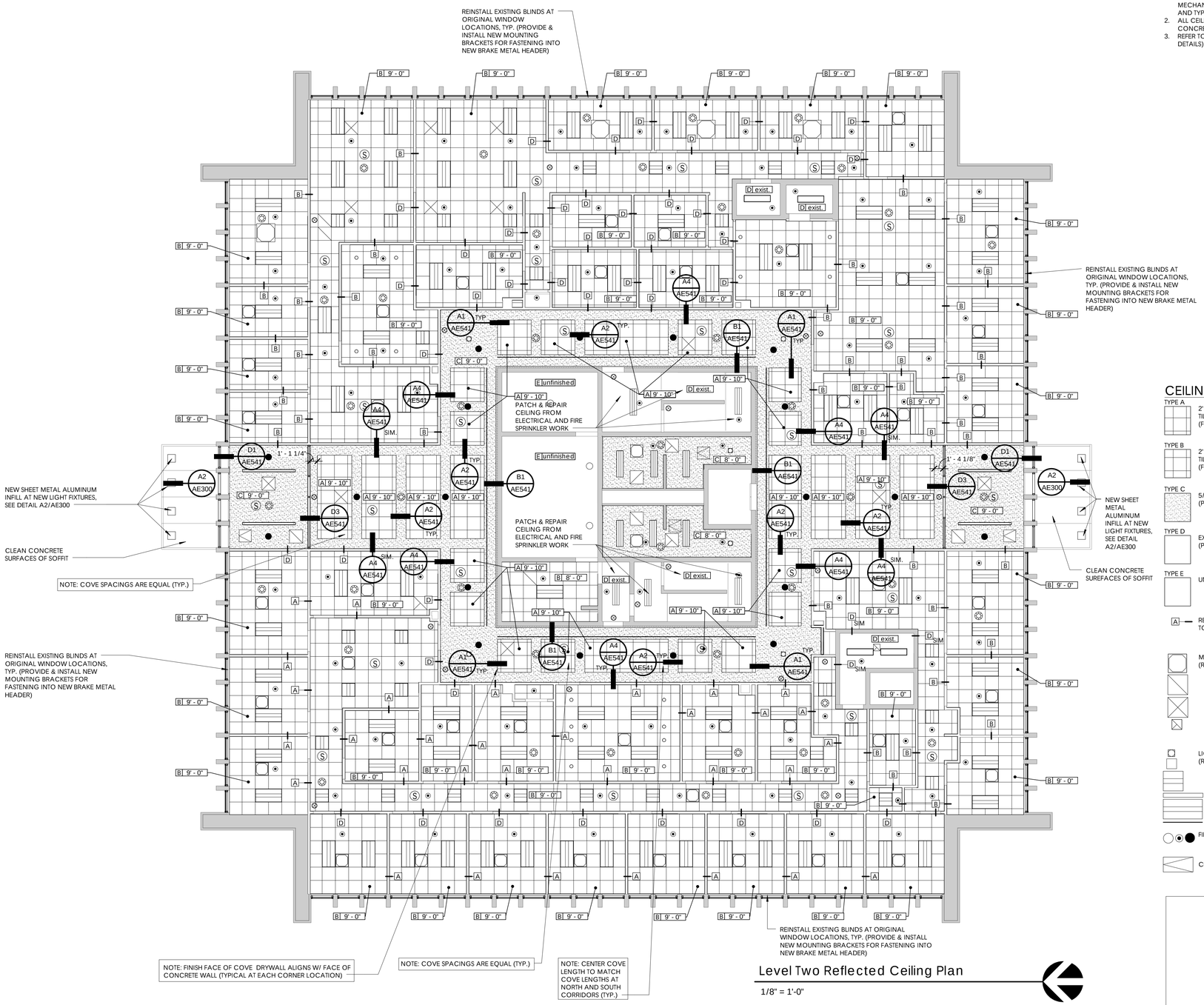

Level Two Reflected Ceiling Plan

1/8" = 1'-0"

CEILING PLAN LEGEND

CLG. TYPE
CLG. HEIGHT

TYPE A — 2' X 2' LAY-IN ACOUSTICAL TILE IN SUSPENDED GRID (FINISH AC-1)

TYPE B — 2' X 2' LAY-IN ACOUSTICAL TILE IN SUSPENDED GRID (FINISH AC-2)

TYPE C — 5/8" GYPSUM BOARD (PAINTED)

TYPE D — EXISTING CEILING (PAINTED)

TYPE E — UNFINISHED

A — REFER TO SHEET AE582 FOR TOP OF WALL/CEILING DETAILS

MECHANICAL EQUIPMENT (REFER TO MECHANICAL)

LIGHT FIXTURES (REFER TO ELECTRICAL)

FIRE SPRINKLER HEAD (REFER TO FIRE PROTECTION)

CEILING ACCESS DOOR

DFCM approval

SANDERS ASSOCIATES ARCHITECTS
2668 Grant Avenue
Ogden, UT 84401
t 801.621.7303
www.sandersarch.com

Seal

REGISTERED PROFESSIONAL ARCHITECT
M. SHANE SANDERS
5294503-0301
UTAH

Consultant

Project Name

WSU- MILLER ADMINISTRATION

MEP Upgrades and Remodel

3848 HARRISON BLVD.
OGDEN, UTAH 84401

Issued

No.	Date	Description
1	01.16.15	DFCM PLAN REVIEW
2	02.03.15	BID DOCUMENTS

Revision

No.	Date	Description

DFCM Project No. 14031810

SAA Project No. 214016

Drawing Title

LEVEL 2 REFLECTED CEILING PLAN

Sheet Number

AE121

GENERAL CEILING NOTES

1. REFER TO ARCHITECTURAL DRAWINGS FOR LOCATIONS OF MECHANICAL GRILLES AND LIGHT FIXTURES. REFER TO MECHANICAL AND ELECTRICAL DRAWINGS FOR QUANTITIES AND TYPES.
2. ALL CEILING HEIGHTS ARE ELEVATIONS ABOVE TOP OF CONCRETE FLOOR SLAB.
3. REFER TO DRAWING SHEET AE582 FOR TOP OF WALL. (CEILING DETAILS)

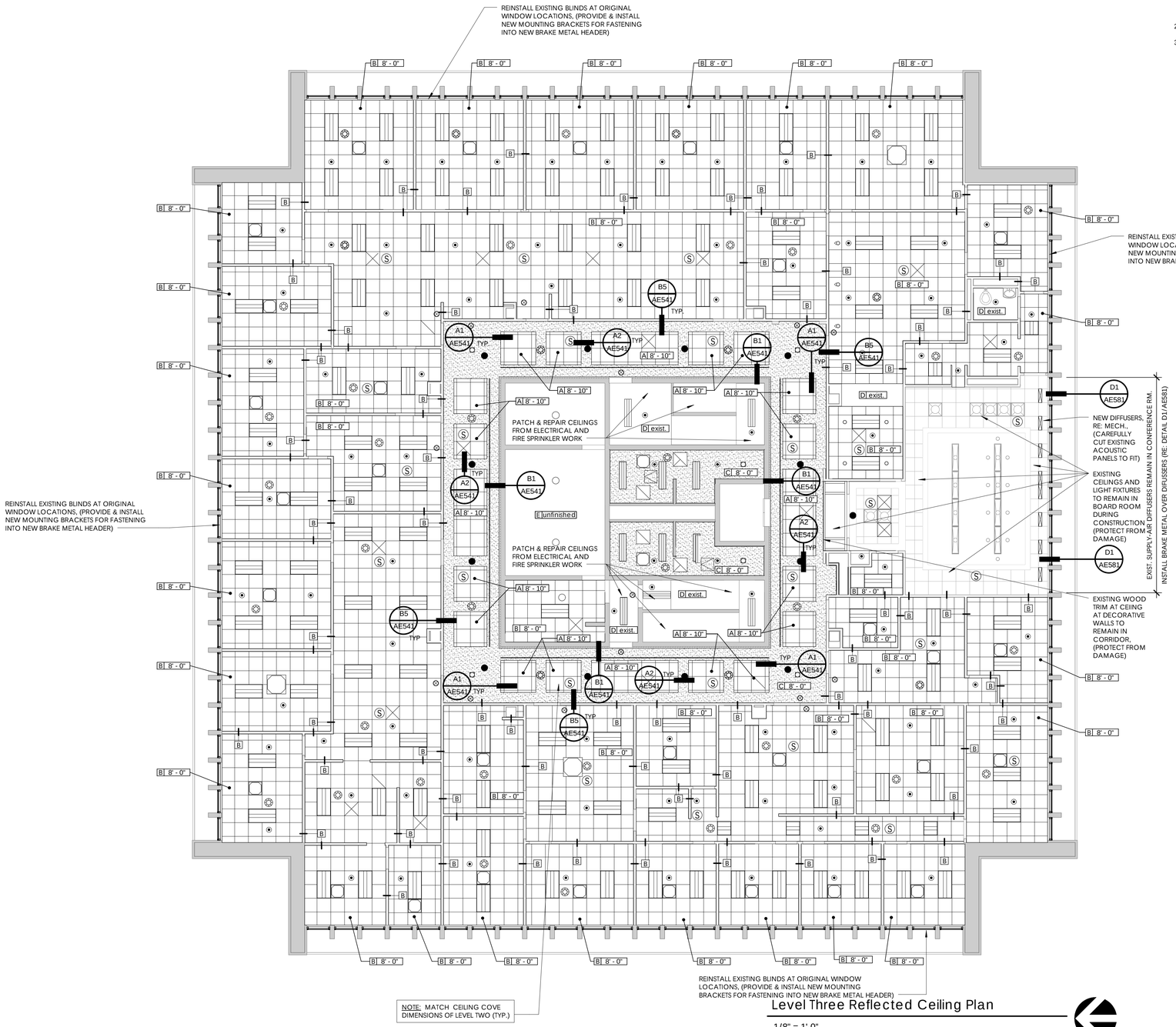

Level Three Reflected Ceiling Plan

1/8" = 1'-0"

CEILING PLAN LEGEND

CLG. TYPE
CLG. HEIGHT

TYPE A — 2' X 2' LAY-IN ACOUSTICAL TILE IN SUSPENDED GRID (FINISH AC-1)

TYPE B — 2' X 2' LAY-IN ACOUSTICAL TILE IN SUSPENDED GRID (FINISH AC-2)

TYPE C — 5/8" GYPSUM BOARD (PAINTED)

TYPE D — EXISTING CEILING (PAINTED)

TYPE E — UNFINISHED

A — REFER TO SHEET AE582 FOR TOP OF WALL/CEILING DETAILS

MECHANICAL EQUIPMENT (REFER TO MECHANICAL)

LIGHT FIXTURES (REFER TO ELECTRICAL)

FIRE SPRINKLER HEAD (REFER TO FIRE PROTECTION)

CEILING ACCESS DOOR

DFCM approval

SANDERS ASSOCIATES ARCHITECTS
2668 Grant Avenue
Ogden, UT 84401
t 801.621.7303
www.sandersarch.com

Seal

REGISTERED PROFESSIONAL ARCHITECT
M. SHANE SANDERS
5294553-0301
UTAH

Consultant

Project Name

WSU- MILLER ADMINISTRATION

MEP Upgrades and Remodel

3848 HARRISON BLVD.
OGDEN, UTAH 84401

Issued

No.	Date	Description
1	01.16.15	DFCM PLAN REVIEW
2	02.03.15	BID DOCUMENTS

Revision

No.	Date	Description

DFCM Project No. 14031810

SAA Project No. 214016

Drawing Title

LEVEL 3 REFLECTED CEILING PLAN

Sheet Number

AE122

INTERIOR FINISH KEY

NOTE: SCHEDULE MATERIALS AND FINISHES SHALL BE USED FOR BASIS OF DESIGN.

CODE	MATERIAL	MANUFACTURER	PRODUCT NAME/NUMBER	COLOR-FINISH	SIZE	COMMENTS
CARPET						
CPT-1	CARPET TILE	SHAW	QUARTZ - 5T017	SMOKY QUARTZ - 14761	18" X 36"	SEE FINISH FLOOR PLAN FOR LAYOUT
CPT-2	CARPET TILE	SHAW	BLUR TILE - 59596	SHADED - 95585	18" X 36"	SEE FINISH FLOOR PLAN FOR LAYOUT
CPT-3	WALK-OFF CARPET TILE	J+J INVISION	CATWALK - STYLE 7010	SPOTLIGHT - 1427	24" X 24"	QUARTER TURN INSTALLATION METHOD
CPT-4	BROADLOAM CARPET	SHAW	HIGHLIGHT- 60735	EGGPLANT- 35990		CARPET BOARDER AT CURTAINWALL. SEE DETAIL C4/AE581
RUBBER						
R-1	RUBBER STAIR SYSTEM	ROPPE	SAFETCORK	TBD		
R-2	RUBBER FLOOR LANDING	ROPPE	SAFETCORK	TBD	20" X 20"	
R-3	RUBBER FLOOR ACCENT	ROPPE	SAFETCORK	TBD	20" X 20"	
TILE						
T-1	PORCELAIN FLOOR TILE	MARAZZI TILE	ESSENTIALS	GREY MOSAIC	2" X 4" BRICK	
T-2	CERAMIC WALL TILE	CONTEMPO TILE	CENTO	W - MATTE	5" X 7"	SEE INTERIOR ELEVATIONS FOR LAYOUT
T-3	CERAMIC WALL TILE	CONTEMPO TILE	CENTO	W - GLOSS	5" X 7"	SEE INTERIOR ELEVATIONS FOR LAYOUT
T-4	CERAMIC WALL TILE	CONTEMPO TILE	CENTO	DG - MATTE	5" X 7"	SEE INTERIOR ELEVATIONS FOR LAYOUT
T-5	CERAMIC WALL TILE	CONTEMPO TILE	CENTO	DG - GLOSS	5" X 7"	SEE INTERIOR ELEVATIONS FOR LAYOUT
T-6	CERAMIC WALL TILE	CONTEMPO TILE	CENTO	VA - GLOSS	5" X 7"	SEE INTERIOR ELEVATIONS FOR LAYOUT
GROUT						
G-1	FLOOR GROUT	MAPEI	FLEXCOLOR CQ	47 CHARCOAL		
G-2	WALL GROUT	MAPEI	FLEXCOLOR CQ	00 WHITE		
BASE / TRANSITIONS						
B-1	RUBBER BASE	ROPPE	700 SERIES TYPE TP	100 BLACK	4" STRAIGHT PROFILE	
B-2	TILE BASE	CONTEMPO TILE	CENTO	W - MATTE	5" X 7"	
B-3	RUBBER STAIR STRINGER	ROPPE	10"	100 BLACK		
TR-1	TRANSITION STRIP	ROPPE	VINYL REDUCER #160	100 BLACK		
PAINT						
PNT-1	PAINT	SHERWIN WILLIAMS	EXTRA WHITE - SW7006	SEMI-GLOSS		
PNT-2	PAINT	SHERWIN WILLIAMS	UNIVERSAL KHAKI - SW6150	SEMI-GLOSS		
PNT-3	PAINT	SHERWIN WILLIAMS	CAVIAR - SW6990	SEMI-GLOSS		PAINT COLOR FOR ALL HOLLOW METAL DOOR FRAMES
PNT-4	PAINT	SHERWIN WILLIAMS	WEBER STATE PURPLE	SEMI-GLOSS		
NOTE: ANY PAINT TOUCH-UP IS TO BE REPAINTED FROM WALL CORNER TO WALL CORNER.						
SOLID SURFACE						
SS-1	SOLID SURFACE	WILSONART	SOLID SURFACE	FROSTY WHITE MIRAGE - 1573MG		
ACOUSTICAL						
AC-1	ACOUSTICAL CEILING TILE	USG	ECLIPSE CLIMAPLUS, SLT-78775	MEDIUM TEXTURE, WHITE	24" X 24" X 3/4"	ANGLED TEGULAR
AC-2	ACOUSTICAL CEILING TILE	USG	RADAR EDUCATION SQ - 22421	MEDIUM TEXTURE, WHITE	24" X 24" X 7/8"	SQUARE EDGE

ROOM FINISH SCHEDULE

NO.	NAME	FLOOR FINISH	BASE FINISH	NORTH WALL	SOUTH WALL	EAST WALL	WEST WALL	CEILING FINISH	COMMENTS	NO. 2
1E1	ELEVATOR	CPT-2	-	-	-	-	-	-		1E1
100	CORRIDOR	CPT-1 / CPT-2	B-1	*	*	*	*	AC-1 / PNT-1	*SEE AE161 FOR WALL PAINT COLORS	100
100A	VESTIBULE	CPT-3	B-1	-	-	PNT-4	PNT-1	PNT-1		100A
100B	CORR.	R-2 / R-3	B-1	PNT-1	PNT-1	PNT-1	PNT-1	PNT-1		100B
100C	CORRIDOR	CPT-1 / CPT-2	B-1	*	*	*	*	AC-1 / PNT-1	*SEE AE161 FOR WALL PAINT COLORS	100C
199A	STAIR	R-1 / R-2 / R-3	B-1 / B-3	PNT-1	PNT-1	PNT-1	PNT-1	PNT-1		199A
199B	STAIR	R-1 / R-2	B-1 / B-3	PNT-1	PNT-1	PNT-1	PNT-1	PNT-1		199B
201	VESTIBULE	CPT-3	B-1	-	-	PNT-1	PNT-1	PNT-1		201
203	CORRIDOR	CPT-1 / CPT-2	B-1 / B-2	*	*	*	*	AC-1 / PNT-1	*SEE AE162 FOR WALL PAINT COLORS	203
206	WOMEN	T-1	-	T-2 / T-3 / T-6	T-2 / T-3 / T-4 / T-5 / T-6	T-2 / T-3 / T-6	T-2 / T-3 / T-4 / T-5 / T-6	PNT-1	SEE INTERIOR ELEVATIONS	206
208	VESTIBULE	CPT-3	B-1	-	-	PNT-1	PNT-1	PNT-1		208
212	CORR.	R-2 / R-3	B-1	PNT-1	PNT-1	PNT-1	PNT-1	PNT-1		212
213	MEN	T-1	-	T-2 / T-3 / T-6	T-2 / T-3 / T-4 / T-5 / T-6	T-2 / T-3 / T-4 / T-5 / T-6	T-2 / T-3 / T-6	PNT-1	SEE INTERIOR ELEVATIONS	213
299A	STAIR	R-1 / R-2 / R-3	B-1 / B-3	PNT-1	PNT-1	PNT-1	PNT-1	PNT-1		299A
299B	STAIR	R-2 / R-3	B-1 / B-3	PNT-1	PNT-1	PNT-1	PNT-1	PNT-1		299B
301	CORRIDOR	CPT-1 / CPT-2	B-1 / B-2	*	*	*	*	AC-1 / PNT-1	*SEE AE163 FOR WALL PAINT COLORS	301
305	MEN	T-1	-	T-2 / T-3 / T-6	T-2 / T-3 / T-4 / T-5 / T-6	T-2 / T-3 / T-6	T-2 / T-3 / T-4 / T-5 / T-6	PNT-1	SEE INTERIOR ELEVATIONS	305
314A	CORR.	R-2 / R-3	B-1	PNT-1	PNT-1	PNT-1	PNT-1	PNT-1		314A
315	WOMEN	T-1	-	T-2 / T-3 / T-6	T-2 / T-3 / T-4 / T-5 / T-6	T-2 / T-3 / T-4 / T-5 / T-6	T-2 / T-3 / T-6	PNT-1	SEE INTERIOR ELEVATIONS	315
399A	STAIR	R-1 / R-2 / R-3	B-1 / B-3	PNT-1	PNT-1	PNT-1	PNT-1	PNT-1		399A
399B	STAIR	R-1 / R-2	B-1 / B-3	PNT-1	PNT-1	PNT-1	PNT-1	PNT-1		399B

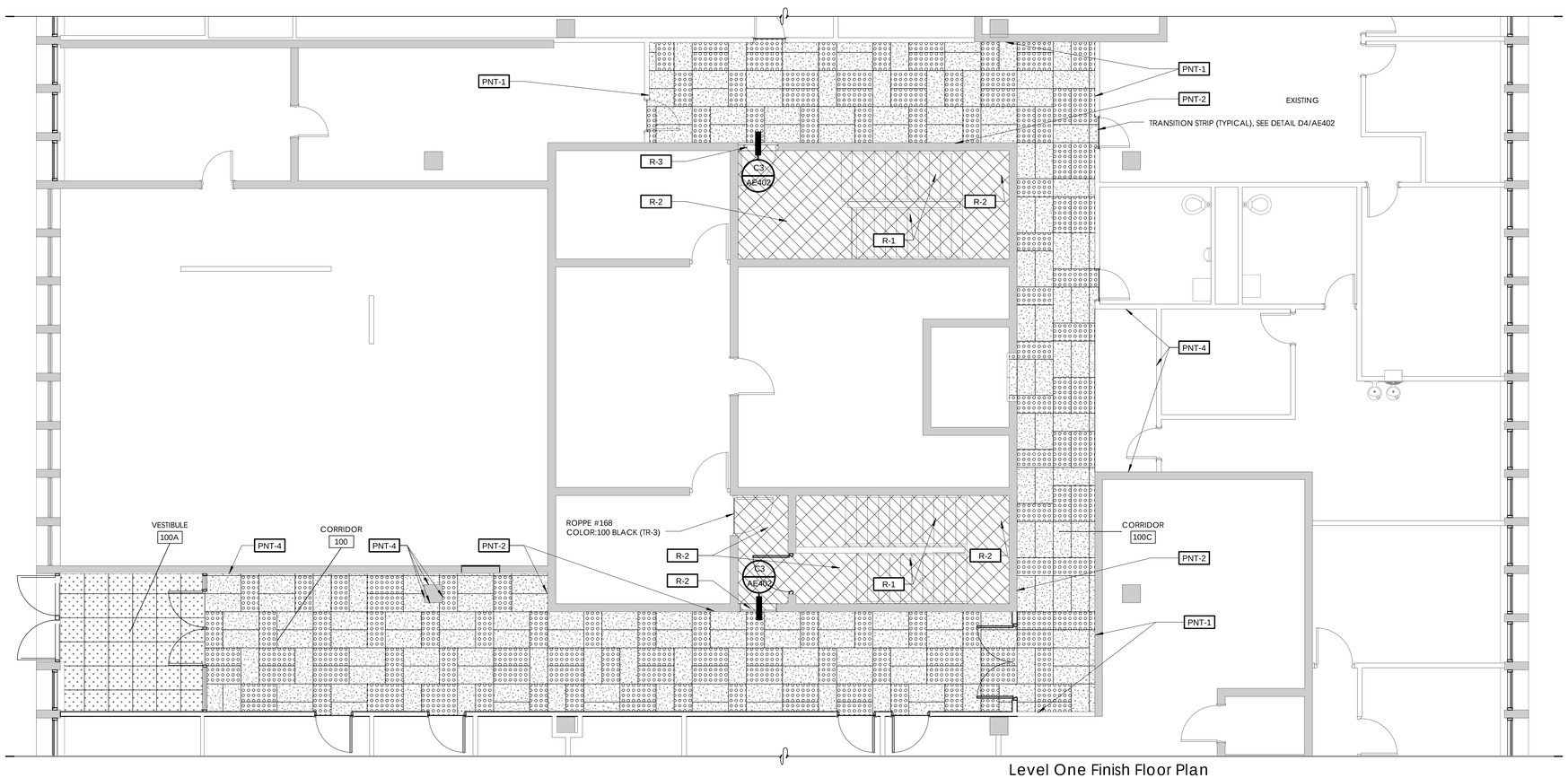

Level One Finish Floor Plan

3/16" = 1'-0"

FINISH LEGEND

- CPT-1
- CPT-2
- CPT-3
- T-1
- RUBBER STAIR AND LANDING SYSTEM
- EXISTING FLOORING TO REMAIN (PROTECT AS INDICATED ON DEMOLITION NOTES)

DFCM approval

SANDERS ASSOCIATES ARCHITECTS
2668 Grant Avenue
Ogden, UT 84401
t 801.621.7303
www.sandersarch.com

Seal

REGISTERED PROFESSIONAL ARCHITECT
M. SHANE SANDERS
5024503-0301
UTAH

Consultant

Project Name

WSU- MILLER ADMINISTRATION
MEP Upgrades and Remodel
3848 HARRISON BLVD.
OGDEN, UTAH 84401

Issued

No.	Date	Description
1	01.16.15	DFCM PLAN REVIEW
2	02.03.15	BID DOCUMENTS

Revision

No.	Date	Description

DFCM Project No. 14031810

SAA Project No. 214016

Drawing Title

LEVEL ONE FINISH FLOOR PLAN

Sheet Number

AE161

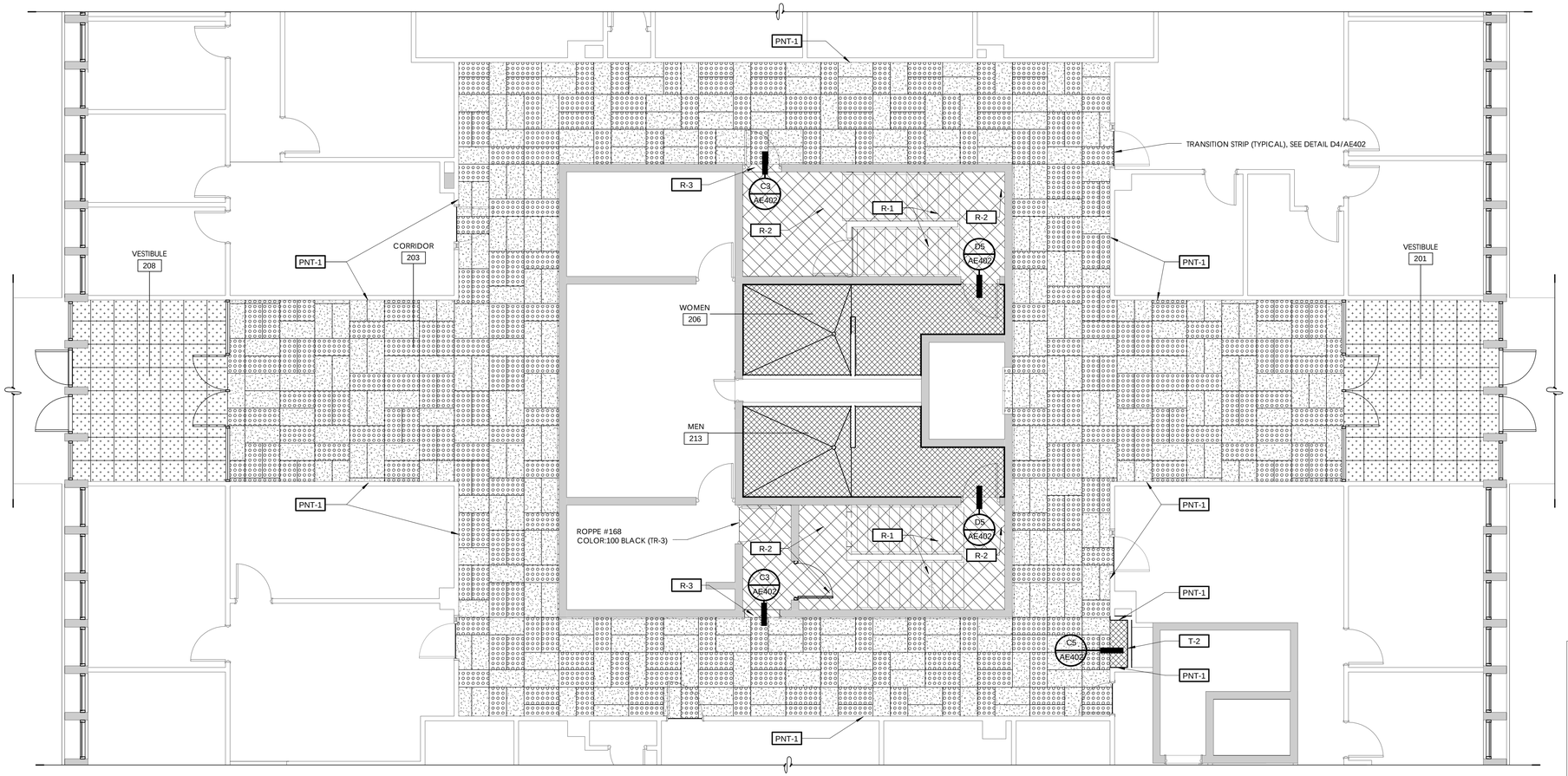

Level Two Finish Floor Plan

3/16" = 1'-0"

FINISH LEGEND

- CPT-1
- CPT-2
- CPT-3
- T-1
- RUBBER STAIR AND LANDING SYSTEM
- EXISTING FLOORING TO REMAIN (PROTECT AS INDICATED ON DEMOLITION NOTES)

DFCM approval

SANDERS ASSOCIATES ARCHITECTS
2668 Grant Avenue
Ogden, UT 84401
t: 801.621.7303
www.sandersarch.com

Seal

REGISTERED PROFESSIONAL ARCHITECT
M. SHANE SANDERS
5294503-0301
UTAH

Consultant

Project Name

WSU- MILLER ADMINISTRATION

MEP Upgrades and Remodel

3848 HARRISON BLVD.
OGDEN, UTAH 84401

Issued

No.	Date	Description
1	01.16.15	DFCM PLAN REVIEW
2	02.03.15	BID DOCUMENTS

Revision

No.	Date	Description

DFCM Project No. 14031810

SAA Project No. 214016

Drawing Title

LEVEL TWO FINISH FLOOR PLAN

Sheet Number

AE162

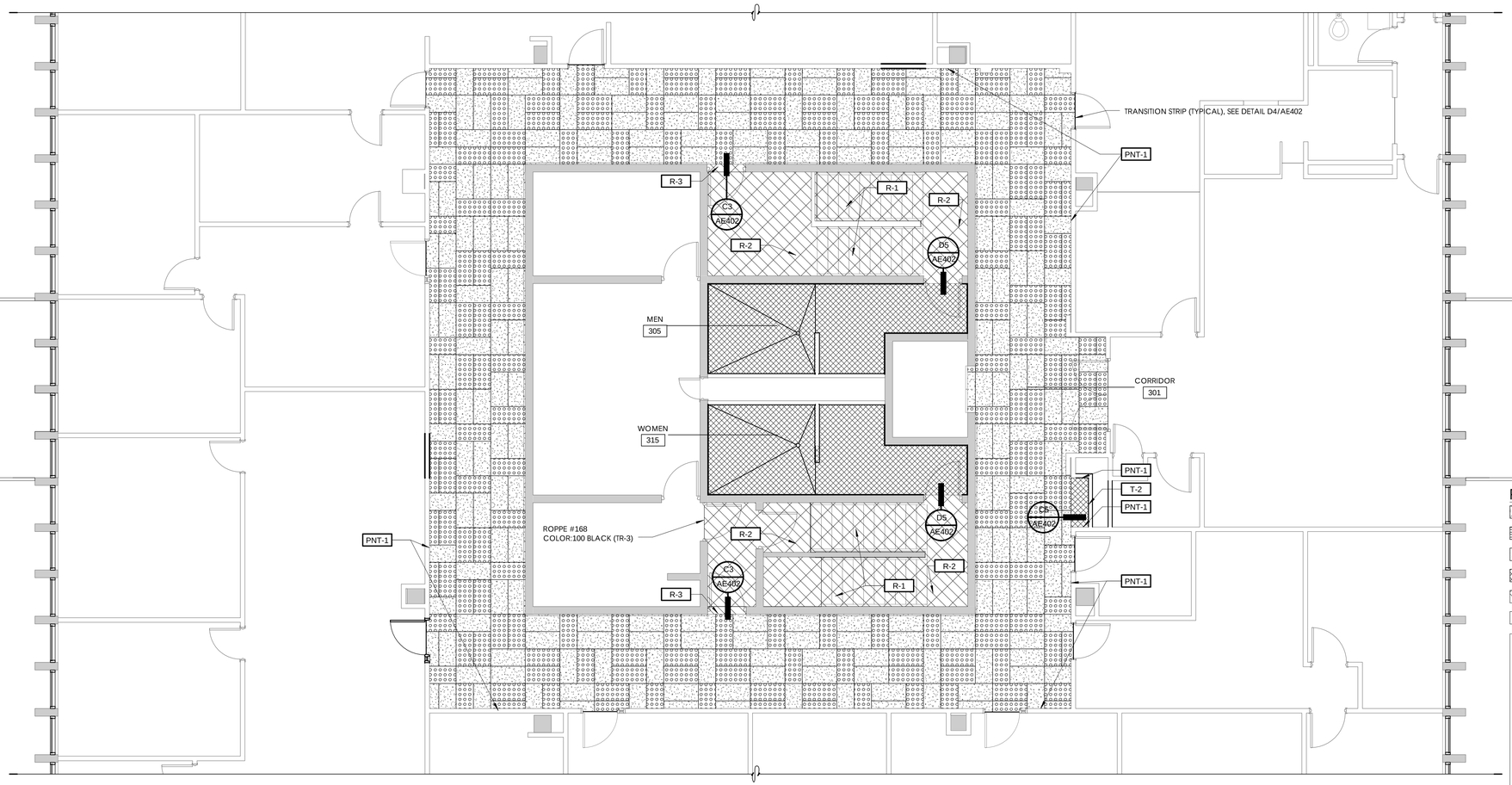

FINISH LEGEND

- CPT-1
- CPT-2
- CPT-3
- T-1
- RUBBER STAIR AND LANDING SYSTEM
- EXISTING FLOORING TO REMAIN (PROTECT AS INDICATED ON DEMOLITION NOTES)

Level Three Finish Floor Plan

3/16" = 1'-0"

DFCM approval

SANDERS ASSOCIATES ARCHITECTS
2668 Grant Avenue
Ogden, UT 84401
t: 801.621.7303
www.sandersarch.com

Seal

REGISTERED PROFESSIONAL ARCHITECT
M. SHANE SANDERS
5024503-0301
UTAH

Consultant

Project Name

WSU- MILLER ADMINISTRATION

MEP Upgrades and Remodel

3848 HARRISON BLVD.
OGDEN, UTAH 84401

Issued

No.	Date	Description
1	01.16.15	DFCM PLAN REVIEW
2	02.03.15	BID DOCUMENTS

Revision

No.	Date	Description

DFCM Project No. 14031810

SAA Project No. 214016

Drawing Title

LEVEL THREE FINISH FLOOR PLAN

Sheet Number

AE163

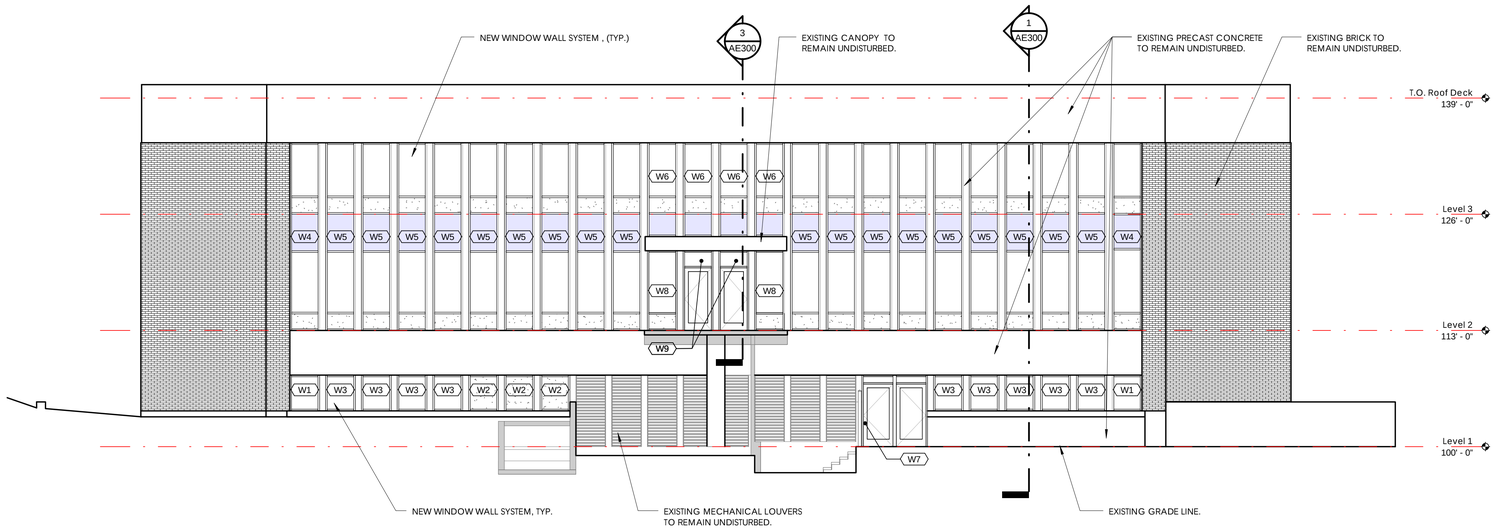

C3 North Elevation

1/8" = 1'-0"

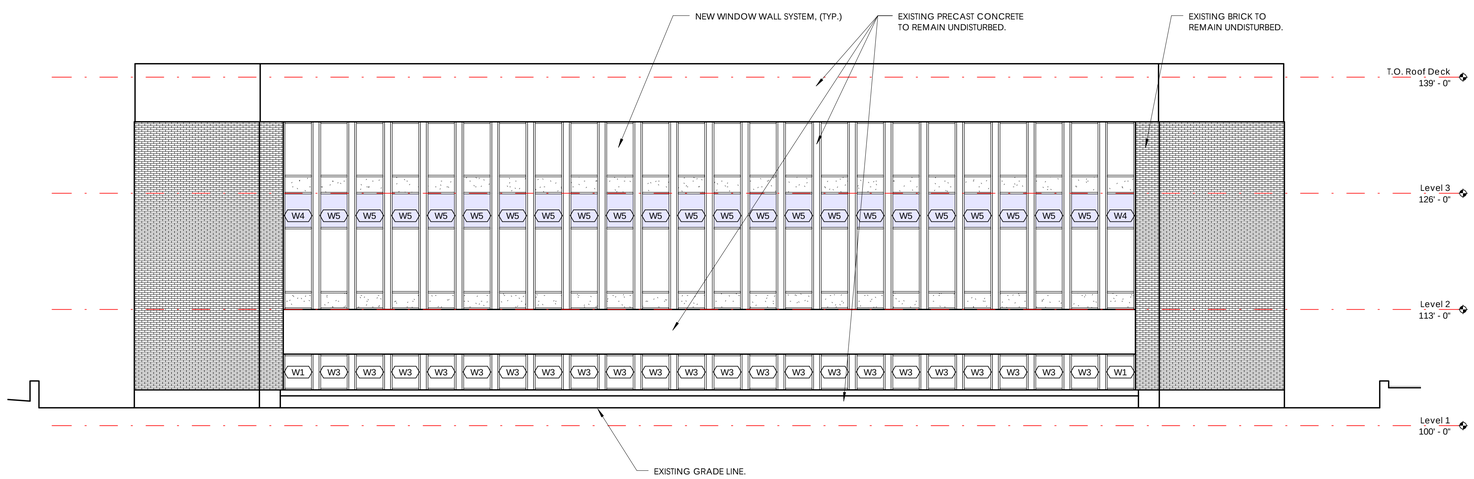

A3 East Elevation

1/8" = 1'-0"

SANDERS ASSOCIATES ARCHITECTS
2668 Grant Avenue
Ogden, UT 84401
t: 801.621.7303
www.sandersarch.com

Seal

REGISTERED PROFESSIONAL ARCHITECT
M. SHANE SANDERS
5294503-0301
UTAH

Consultant

Project Name

WSU- MILLER ADMINISTRATION

MEP Upgrades and Remodel

3848 HARRISON BLVD.
OGDEN, UTAH 84401

Issued

No.	Date	Description
1	01.16.15	DFCM PLAN REVIEW
2	02.03.15	BID DOCUMENTS

Revision

No.	Date	Description

DFCM Project No. 14031810

SAA Project No. 214016

Drawing Title

EXTERIOR
ELEVATIONS

Sheet Number

AE200

DFCM approval

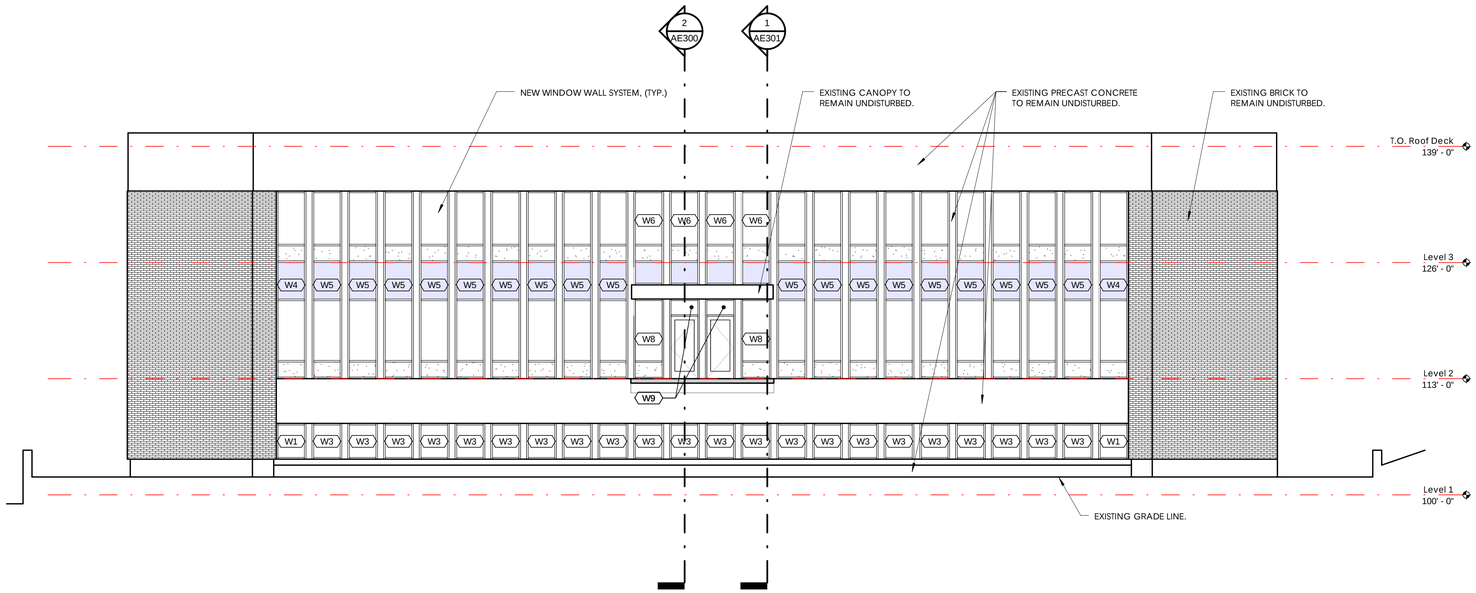

C3 South Elevation

1/8" = 1'-0"

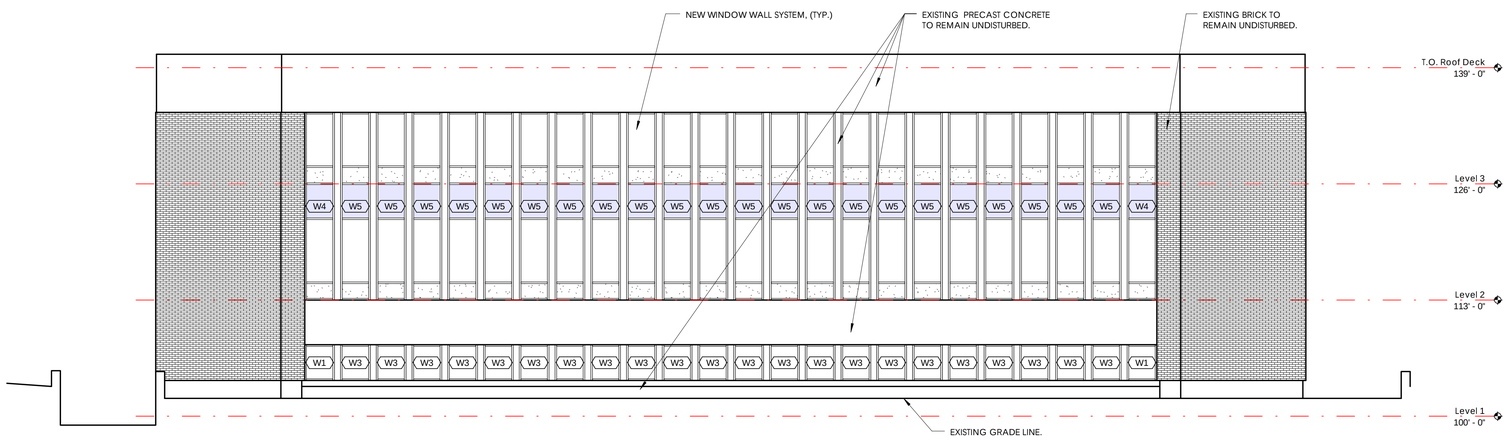

A3 West Elevation

1/8" = 1'-0"

SANDERS ASSOCIATES ARCHITECTS
2668 Grant Avenue
Ogden, UT 84401
t: 801.621.7303
www.sandersarch.com

Seal

REGISTERED PROFESSIONAL ARCHITECT
M. SHANE SANDERS
5526553-0301
UTAH

Consultant

Project Name

WSU- MILLER ADMINISTRATION

MEP Upgrades and Remodel

3848 HARRISON BLVD.
OGDEN, UTAH 84401

Issued

No.	Date	Description
1	01.16.15	DFCM PLAN REVIEW
2	02.03.15	BID DOCUMENTS

Revision

No.	Date	Description

DFCM Project No. 14031810

SAA Project No. 214016

Drawing Title

EXTERIOR ELEVATIONS

Sheet Number

AE201

DFCM approval

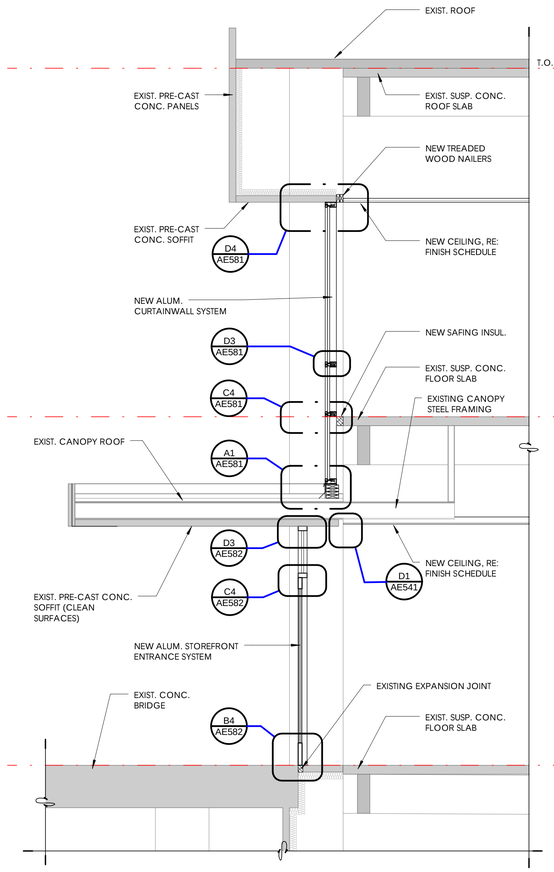

3 Wall Section

3/8" = 1'-0"

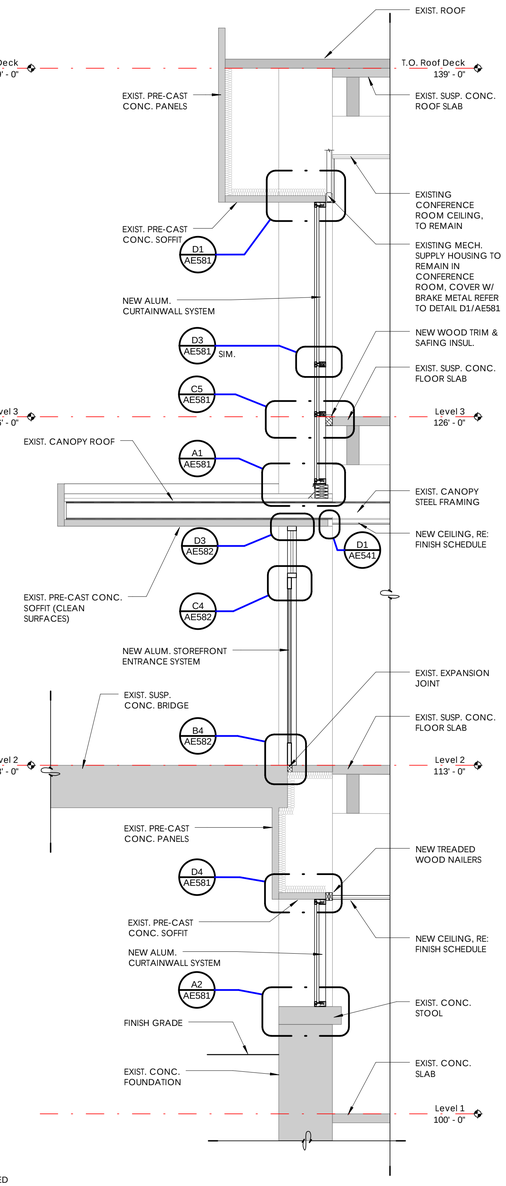

2 Wall Section

3/8" = 1'-0"

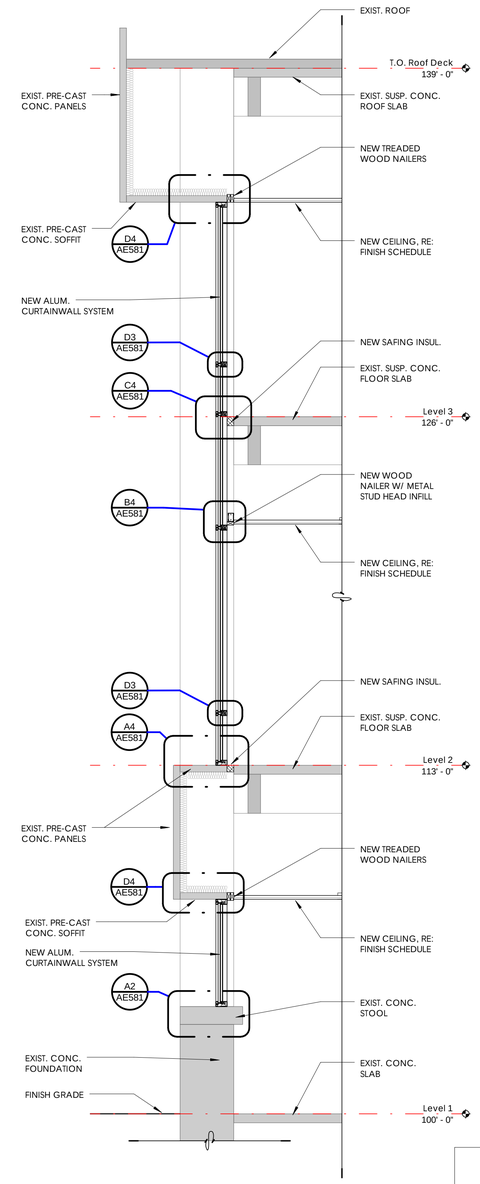

1 Wall Section

3/8" = 1'-0"

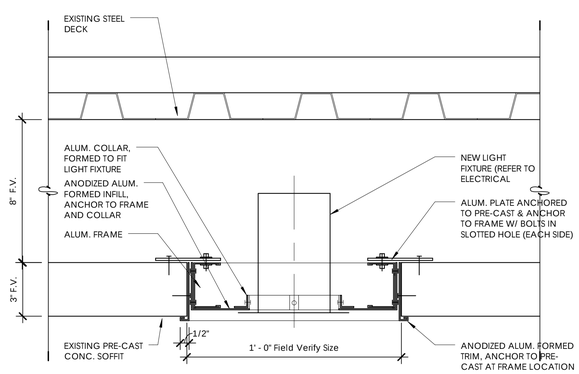

A2 CANOPY SOFFIT LIGHT DETAIL

3" = 1'-0"

DFCM approval

SANDERS ASSOCIATES ARCHITECTS
2668 Grant Avenue
Ogden, UT 84401
t 801.621.7303
www.sandersarch.com

Seal

REGISTERED PROFESSIONAL ARCHITECT
M. SHANE SANDERS
5526553-0301
UTAH

Consultant

Project Name

WSU- MILLER ADMINISTRATION

MEP Upgrades and Remodel

3848 HARRISON BLVD.
OGDEN, UTAH 84401

Issued

No.	Date	Description
1	01.16.15	DFCM PLAN REVIEW
2	02.03.15	BID DOCUMENTS

Revision

No.	Date	Description

DFCM Project No. 14031810

SAA Project No. 214016

Drawing Title

WALL SECTIONS

Sheet Number

AE300

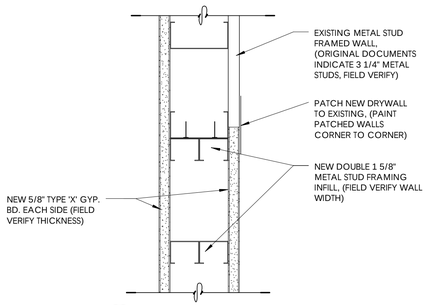

C1 Wall Infill Detail
3" = 1'-0"

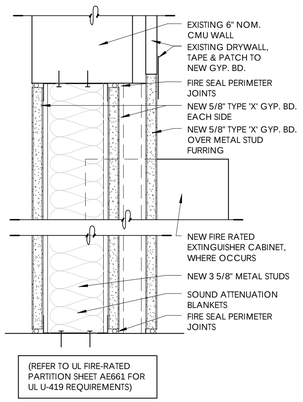

B1 Fire Rated Wall Infill Detail @ DOOR
3" = 1'-0"

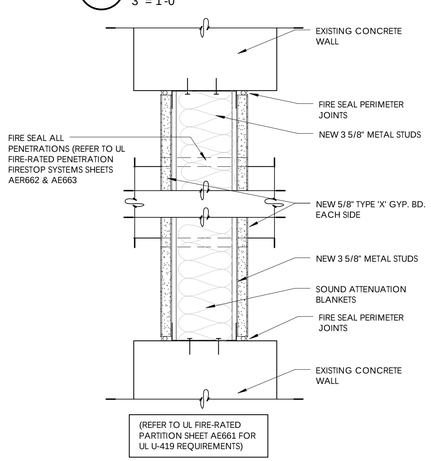

A1 Fire Rated Wall Infill Detail
3" = 1'-0"

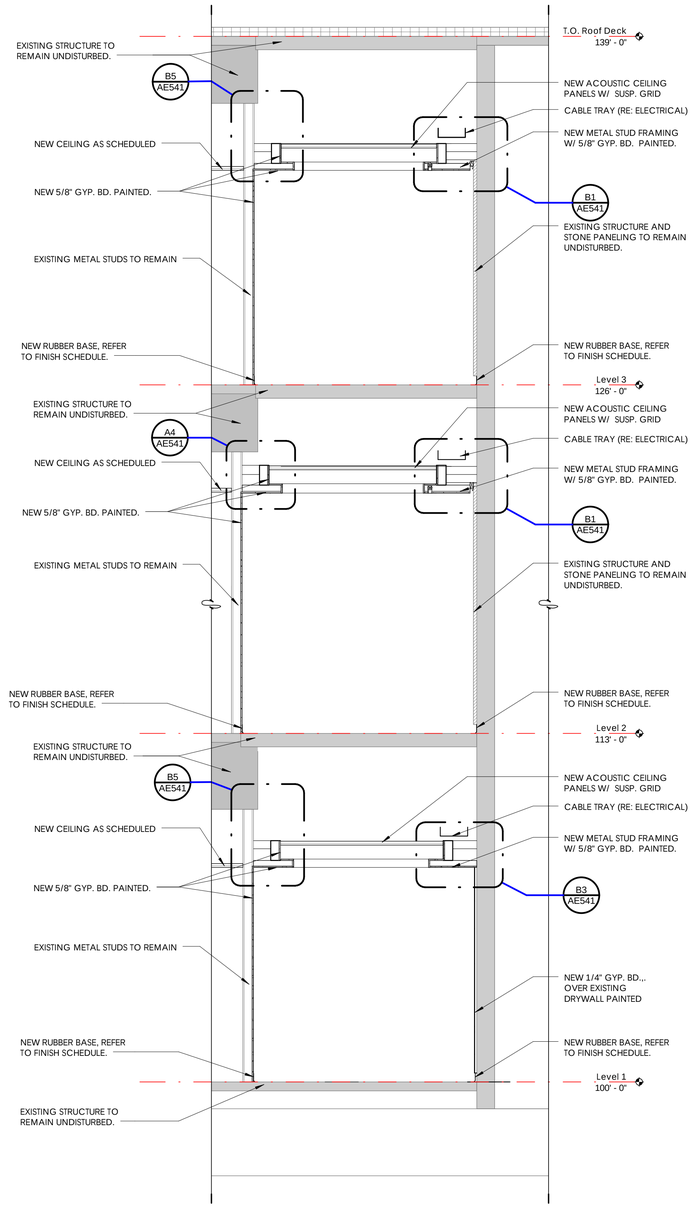

2 Wall Section
3/8" = 1'-0"

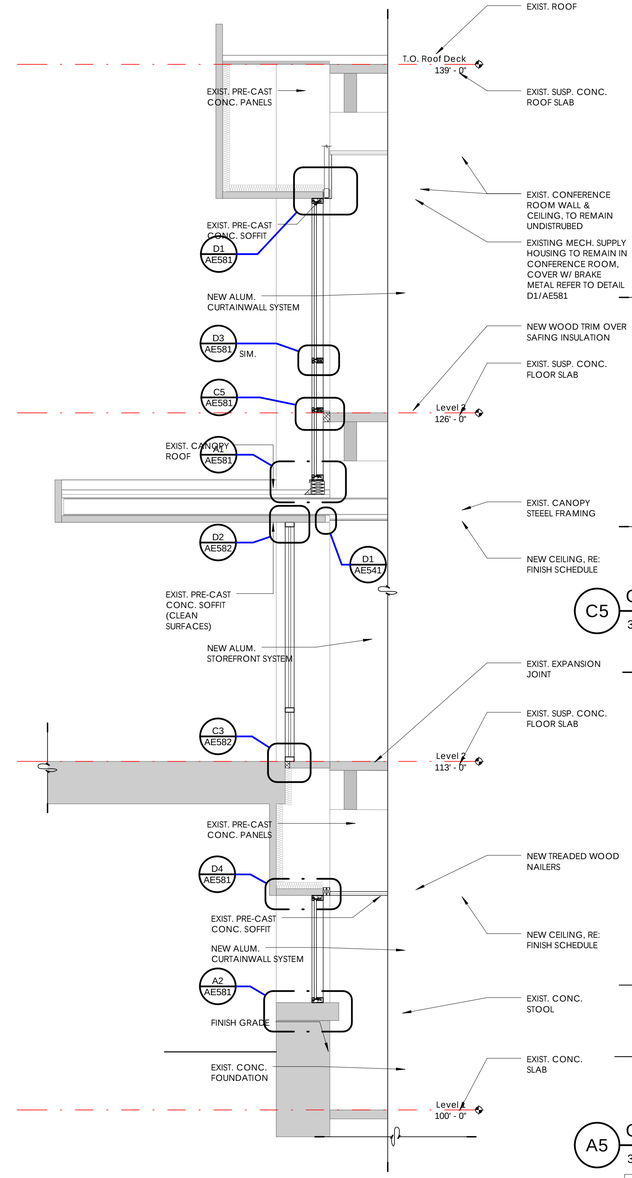

1 Wall Section
3/8" = 1'-0"

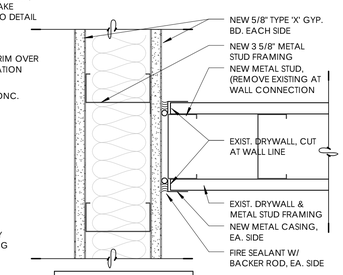

C5 ONE-HOUR FIRE RATED DETAIL
3" = 1'-0"

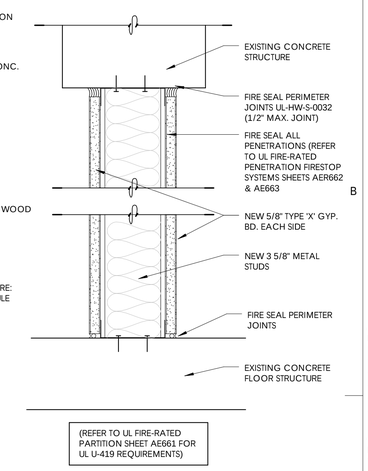

A5 ONE-HOUR FIRE RATED PARTITION
3" = 1'-0"

DFCM approval

SANDERS ASSOCIATES ARCHITECTS
2668 Grant Avenue
Ogden, UT 84401
t 801 621.7303
www.sandersarch.com

Seal

REGISTERED PROFESSIONAL ARCHITECT
M. SHANE SANDERS
5526553-0301
UTAH

Consultant

Project Name

WSU- MILLER ADMINISTRATION
MEP Upgrades and Remodel
3848 HARRISON BLVD.
OGDEN, UTAH 84401

Issued

No.	Date	Description
1	01.16.15	DFCM PLAN REVIEW
2	02.03.15	BID DOCUMENTS

Revision

No.	Date	Description

DFCM Project No. 14031810
SAA Project No. 214016

Drawing Title

WALL SECTIONS

Sheet Number

AE301

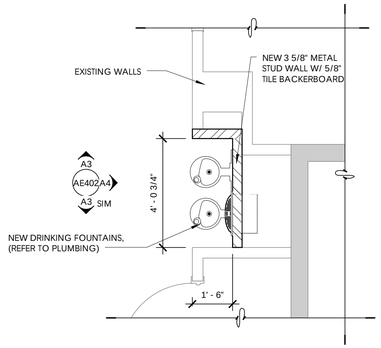

C1 Level 2 - Enlarged Drinking Fountain Plan

3/8" = 1'-0"

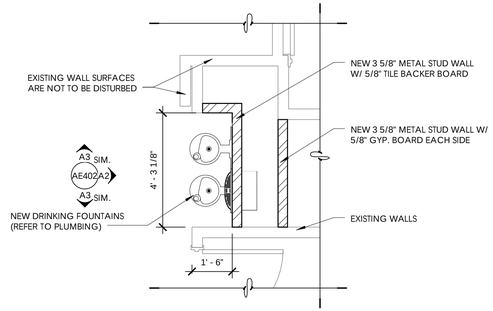

C2 Level 3 - Enlarged Drinking Fountain Plan

3/8" = 1'-0"

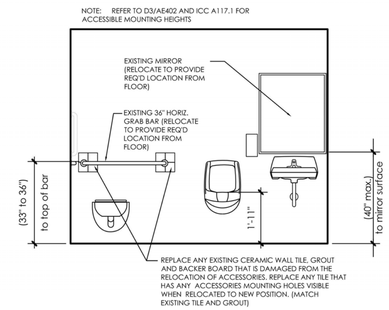

C3 Men 109 South Elevation

3/8" = 1'-0"

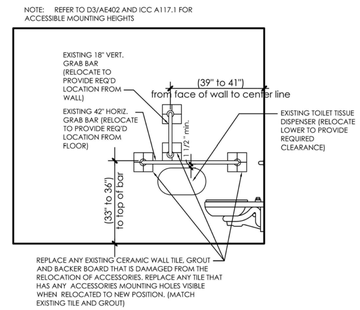

C5 Men 109 East Elevation

3/8" = 1'-0"

TOILET ROOM ACCESSORIES				
CODE	DESCRIPTION	MANU.	COMMENTS	PROVIDED/ INSTALLED BY
TA1	TOILET TISSUE DISPENSER	-	PROVIDE AT EACH TOILET.	OWNER / CONTRACTOR
TA2	WALL MOUNTED SOAP DISPENSER	-	PROVIDE AT EACH SINK. SEE ELEVATIONS.	OWNER / CONTRACTOR
TA3	1/4" POLISHED PLATE GLASS MIRROR	BOBRICK B-290 SERIES BASIS OF DESIGN	FRAMED, 66"X36", ABOVE EACH COUNTER AS SPECIFIED.	CONTRACTOR
TA4	SURFACE MOUNTED PAPER TOWEL DISPENSER	-	SEE ELEVATIONS.	OWNER / CONTRACTOR
TA5	SANITARY NAPKIN DISPOSAL UNIT	BOBRICK B-254 BASIS OF DESIGN	-	CONTRACTOR
TA6	FLOOR MOUNTED TOILET PARTITION	REFER TO SPECIFICATIONS	METAL FLOOR MOUNTED. COLOR: TBD.	CONTRACTOR
TA7	PURSE SHELF	BOBRICK B-287 BASIS OF DESIGN	-	CONTRACTOR

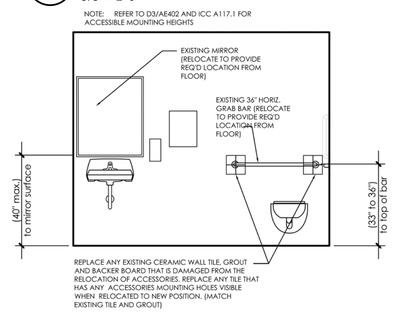

B3 Women 107 North Elevation

3/8" = 1'-0"

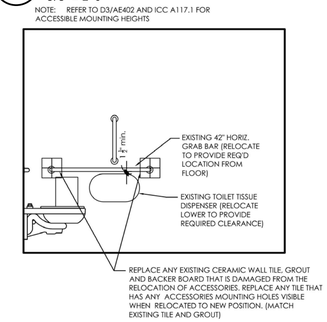

B5 Women 107 East Elevation

3/8" = 1'-0"

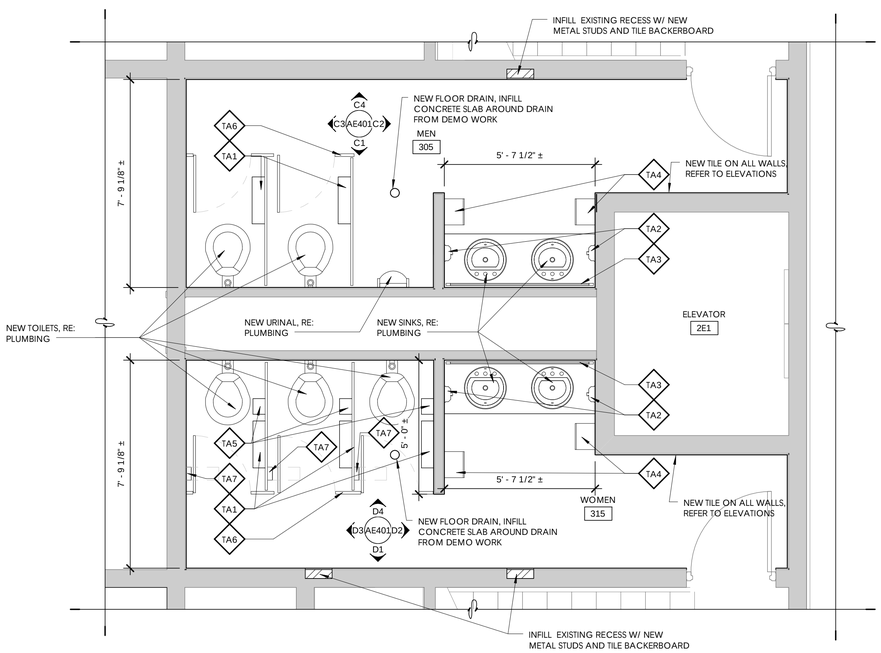

A1 Level Three Enlarged Restrooms Plan

3/8" = 1'-0"

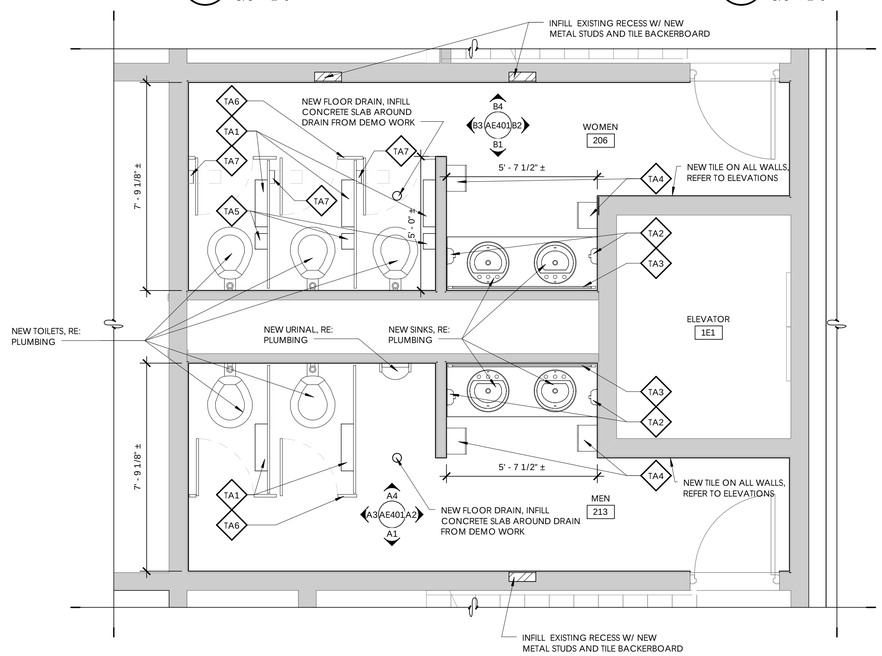

A3 Level Two Enlarged Restrooms Plan

3/8" = 1'-0"

DFCM approval

SANDERS ASSOCIATES ARCHITECTS
2668 Grant Avenue
Ogden, UT 84401
t 801.621.7303
www.sandersarch.com

Seal

REGISTERED PROFESSIONAL ARCHITECT
M. SHANE SANDERS
5526553-0301
UTAH

Consultant

Project Name

WSU- MILLER ADMINISTRATION

MEP Upgrades and Remodel

3848 HARRISON BLVD.
OGDEN, UTAH 84401

Issued

No.	Date	Description
1	01.16.15	DFCM PLAN REVIEW
2	02.03.15	BID DOCUMENTS

Revision

No.	Date	Description

DFCM Project No. 14031810

SAA Project No. 214016

Drawing Title

ENLARGED REST ROOM PLAN

Sheet Number

AE400

TOILET ROOM ACCESSORIES

CODE	DESCRIPTION	MANU.	COMMENTS	PROVIDED/ INSTALLED BY
TA1	TOILET TISSUE DISPENSER	-	PROVIDE AT EACH TOILET.	OWNER / CONTRACTOR
TA2	WALL MOUNTED SOAP DISPENSER	-	PROVIDE AT EACH SINK. SEE ELEVATIONS.	OWNER / CONTRACTOR
TA3	1/4" POLISHED PLATE GLASS MIRROR	BOBRICK B-290 SERIES BASIS OF DESIGN	FRAMED, 66"X36", ABOVE EACH COUNTER AS SPECIFIED.	CONTRACTOR
TA4	SURFACE MOUNTED PAPER TOWEL DISPENSER	-	SEE ELEVATIONS.	OWNER / CONTRACTOR
TA5	SANITARY NAPKIN DISPOSAL UNIT	BOBRICK B-254 BASIS OF DESIGN	-	CONTRACTOR
TA6	FLOOR MOUNTED TOILET PARTITION	REFER TO SPECIFICATIONS	METAL FLOOR MOUNTED. COLOR: TBD.	CONTRACTOR
TA7	PURSE SHELF	BOBRICK B-287 BASIS OF DESIGN	-	CONTRACTOR

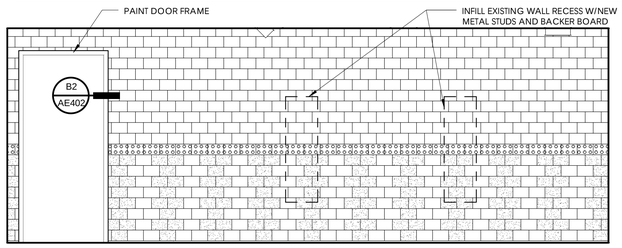

D1 Interior Elevations- Women 315
3/8" = 1'-0"

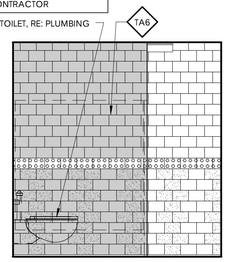

D2 Interior Elevations- Women 315
3/8" = 1'-0"

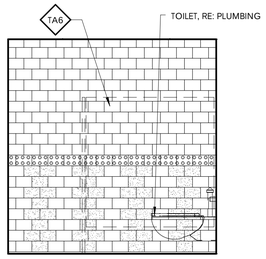

D3 Interior Elevations- Women 315
3/8" = 1'-0"

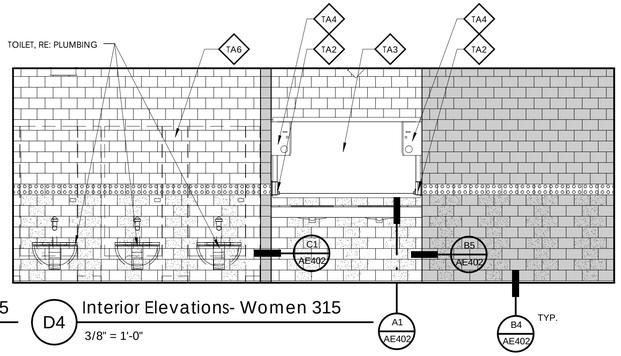

D4 Interior Elevations- Women 315
3/8" = 1'-0"

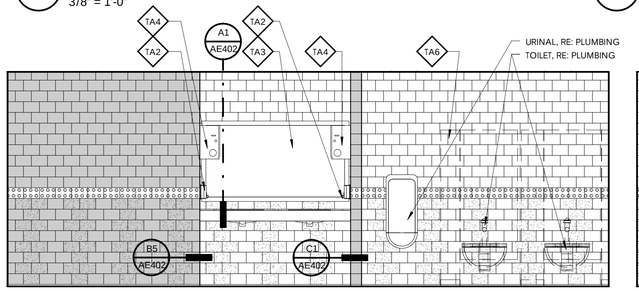

C1 Interior Elevations- Men 305
3/8" = 1'-0"

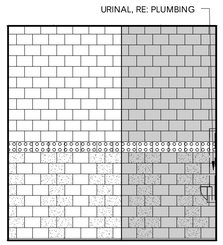

C2 Interior Elevations- Men 305
3/8" = 1'-0"

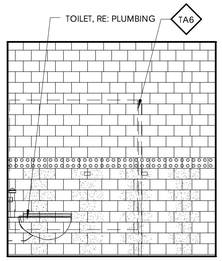

C3 Interior Elevations- Men 305
3/8" = 1'-0"

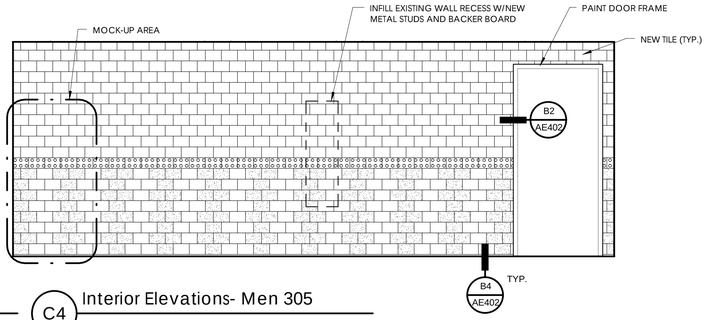

C4 Interior Elevations- Men 305
3/8" = 1'-0"

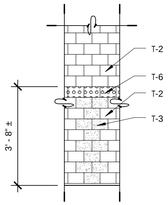

Typical Tile Pattern
3/8" = 1'-0"

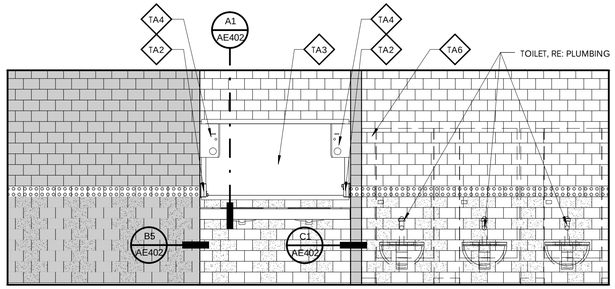

B1 Interior Elevations- Women 206
3/8" = 1'-0"

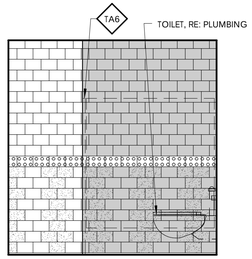

B2 Interior Elevations- Women 206
3/8" = 1'-0"

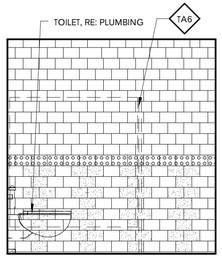

B3 Interior Elevations- Women 206
3/8" = 1'-0"

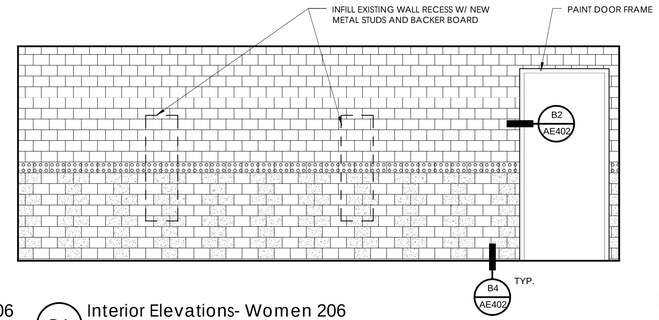

B4 Interior Elevations- Women 206
3/8" = 1'-0"

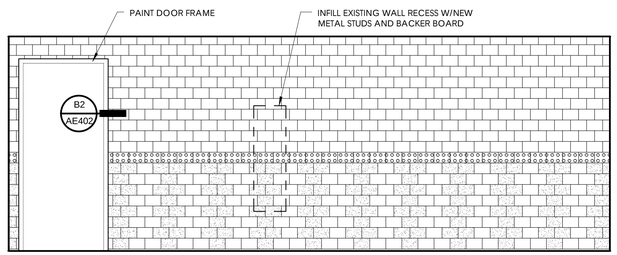

A1 Interior Elevations- Men 213
3/8" = 1'-0"

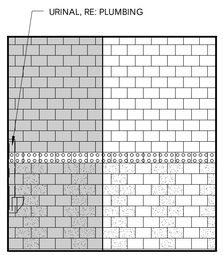

A2 Interior Elevations- Men 213
3/8" = 1'-0"

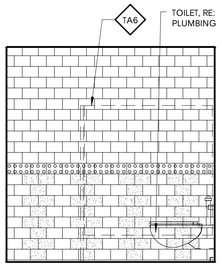

A3 Interior Elevations- Men 213
3/8" = 1'-0"

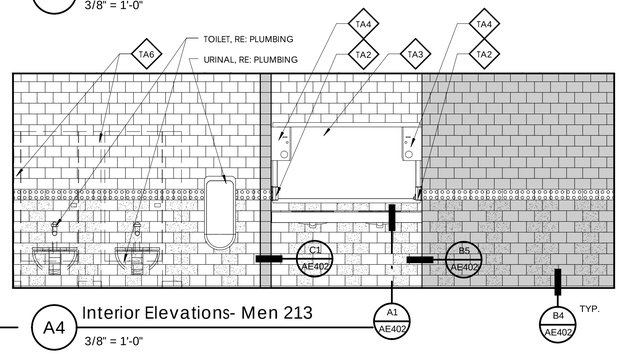

A4 Interior Elevations- Men 213
3/8" = 1'-0"

FINISH LEGEND

SEE FINISH SCHEDULE FOR TILE TYPES

- T-2
- T-3
- T-4
- T-5
- T-6

DFCM approval

SANDERS ASSOCIATES ARCHITECTS
2668 Grant Avenue
Ogden, UT 84401
801 621 7303
www.sandersarch.com

Seal

REGISTERED PROFESSIONAL ARCHITECT
M. SHANE SANDERS
5024503-0301
UTAH

Consultant

Project Name

WSU- MILLER ADMINISTRATION

MEP Upgrades and Remodel

3848 HARRISON BLVD.
OGDEN, UTAH 84401

Issued

No.	Date	Description
1	01.16.15	DFCM PLAN REVIEW
2	02.03.15	BID DOCUMENTS

Revision #

No.	Date	Description

DFCM Project No. 14031810
SAA Project No. 214016

Drawing Title

INTERIOR ELEVATIONS

Sheet Number

AE401

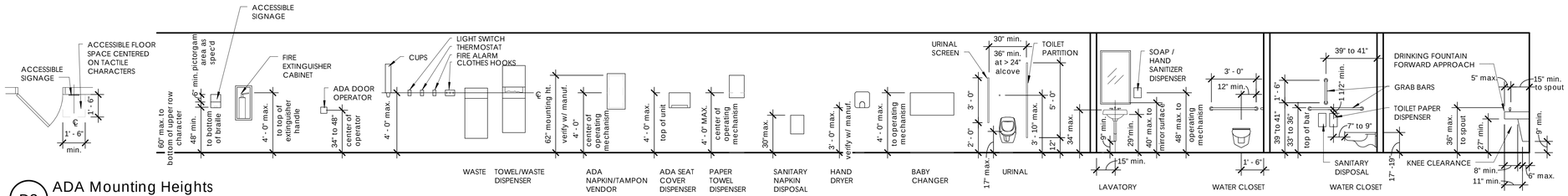

D3 ADA Mounting Heights
1/4" = 1'-0"

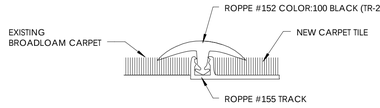

D4 Existing Carpet to New Carpet Detail
12" = 1'-0"

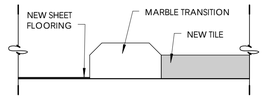

D5 Tile Transition Strip
12" = 1'-0"

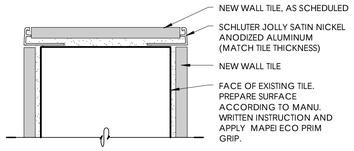

C1 Endwall Detail
6" = 1'-0"

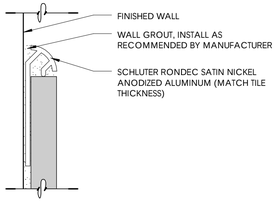

C2 Tile Base Finish Detail
12" = 1'-0"

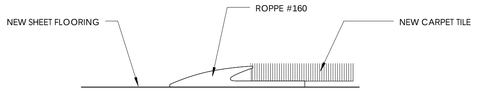

C3 Carpet to Stair Floor
12" = 1'-0"

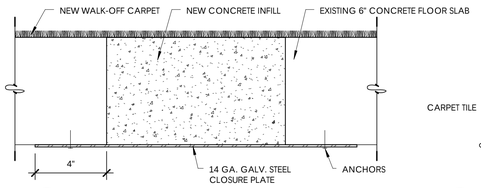

C4 Floor Detail
3" = 1'-0"

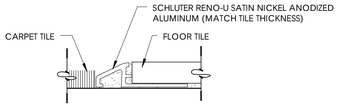

C5 Tile to Carpet Detail
12" = 1'-0"

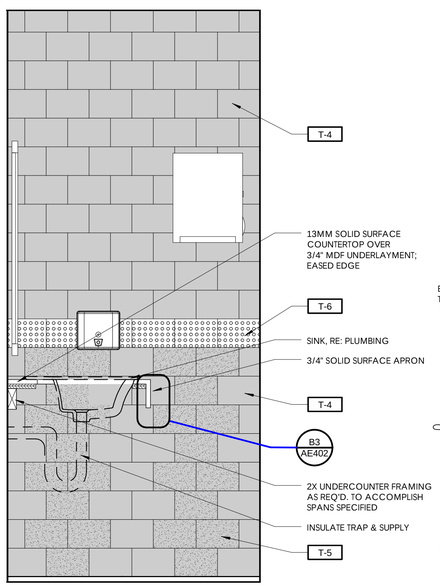

A1 Countertop Section
1" = 1'-0"

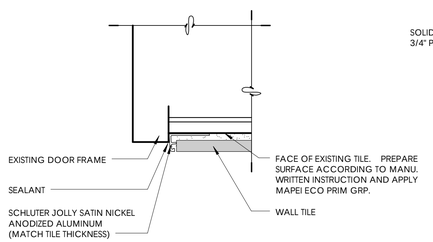

B2 Tile at Door Detail
6" = 1'-0"

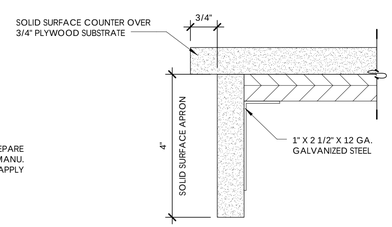

B3 Countertop Detail
6" = 1'-0"

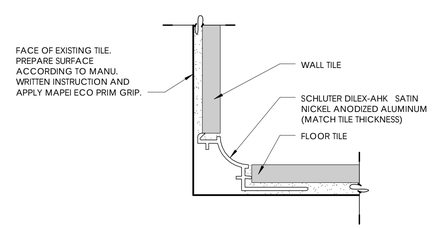

B4 Wall Tile To Floor Tile Detail
12" = 1'-0"

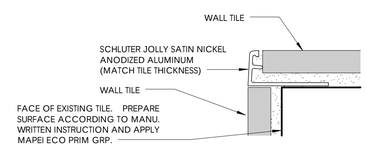

B5 Outside Corner Detail
12" = 1'-0"

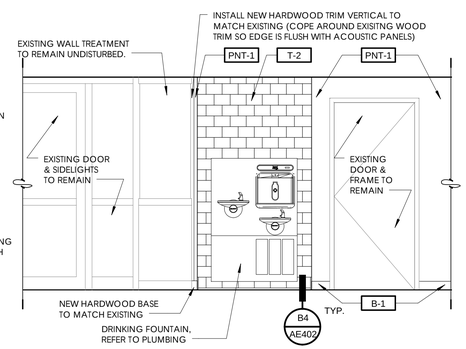

A2 Drinking Fountain Level 3
3/8" = 1'-0"

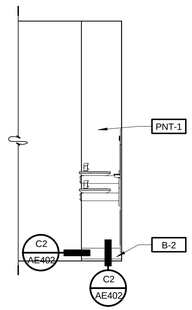

A3 Typical Drinking Fountain Alcove
3/8" = 1'-0"

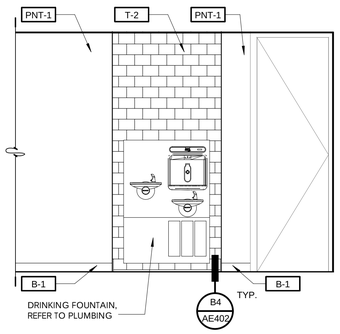

A4 Drinking Fountain Level 2
3/8" = 1'-0"

DFCM approval

SANDERS ASSOCIATES ARCHITECTS
2668 Grant Avenue
Ogden, UT 84401
t 801.621.7303
www.sandersarch.com

Seal

REGISTERED PROFESSIONAL ARCHITECT
M. SHANE SANDERS
5204503-0301
UTAH

Consultant

Project Name

WSU- MILLER ADMINISTRATION
MEP Upgrades and Remodel
3848 HARRISON BLVD.
OGDEN, UTAH 84401

Issued

No.	Date	Description
1	01.16.15	DFCM PLAN REVIEW
2	02.03.15	BID DOCUMENTS

Revision

No.	Date	Description

DFCM Project No. 14031810
SAA Project No. 214016

Drawing Title

INTERIOR ELEVATIONS AND DETAILS

Sheet Number

AE402

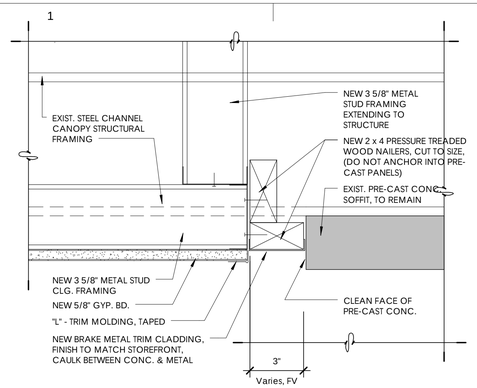

D1 CEILING DETAIL
3" = 1'-0"

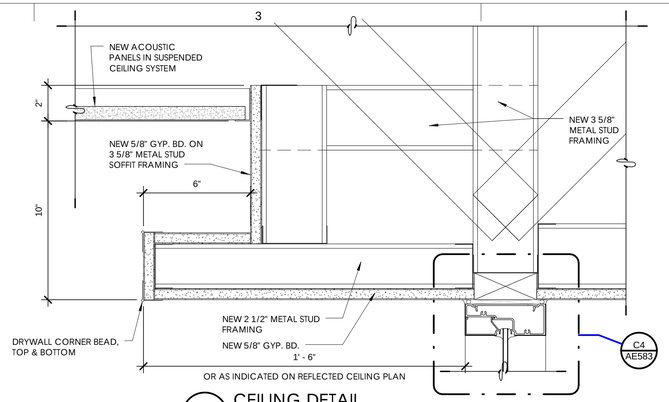

D3 CEILING DETAIL
3" = 1'-0"

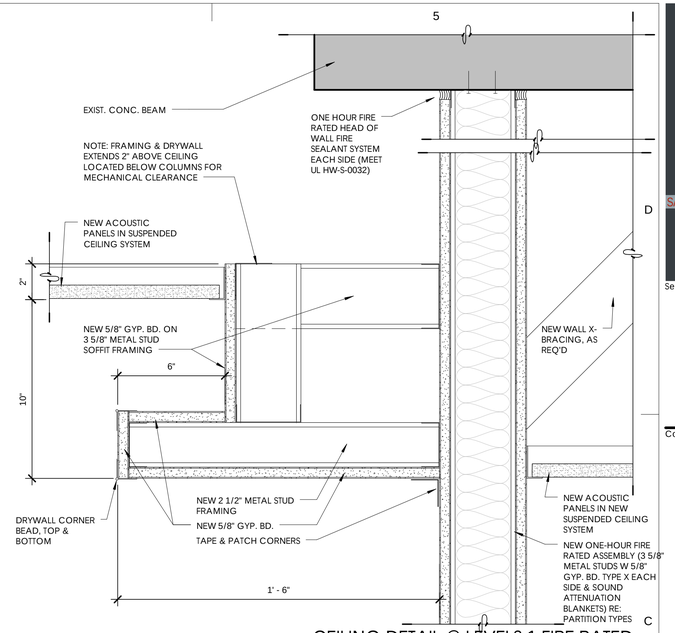

C5 CEILING DETAIL @ LEVELS 1 FIRE RATED PARTITION
3" = 1'-0"

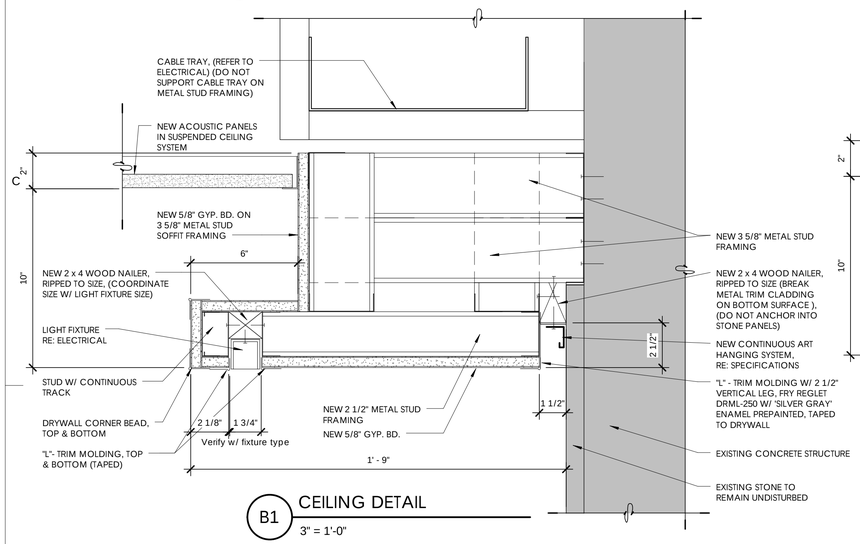

B1 CEILING DETAIL
3" = 1'-0"

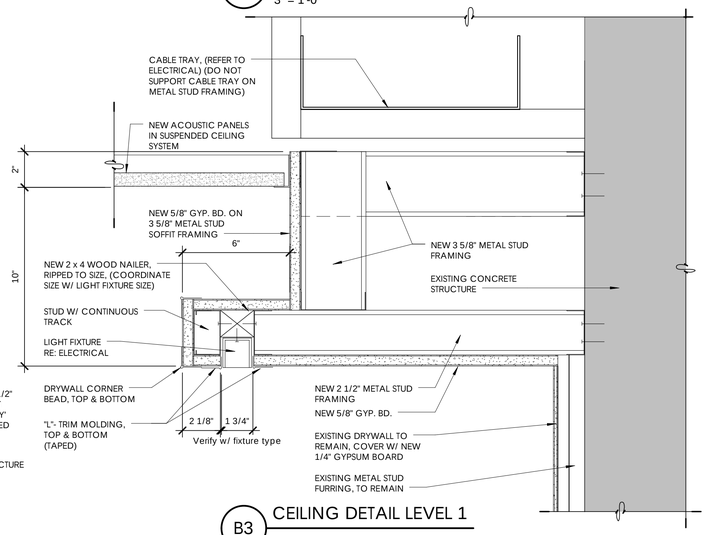

B3 CEILING DETAIL LEVEL 1
3" = 1'-0"

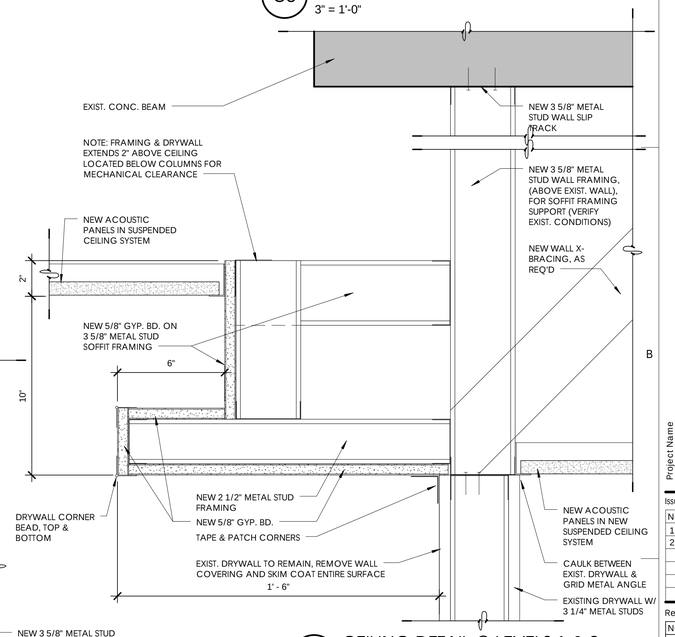

B5 CEILING DETAIL @ LEVELS 1 & 3
3" = 1'-0"

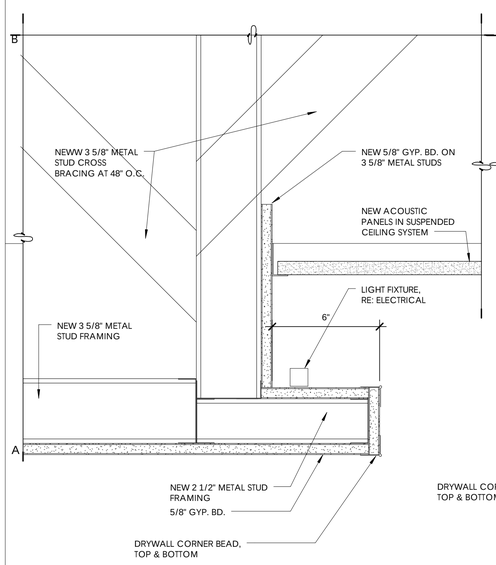

A1 CEILING DETAIL
3" = 1'-0"

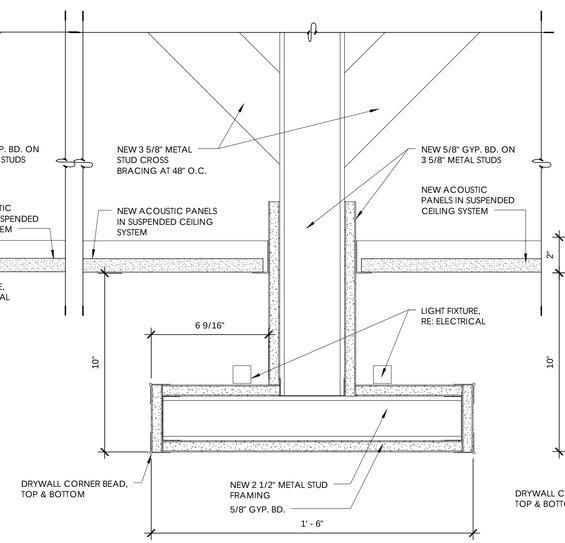

A2 CEILING DETAIL
3" = 1'-0"

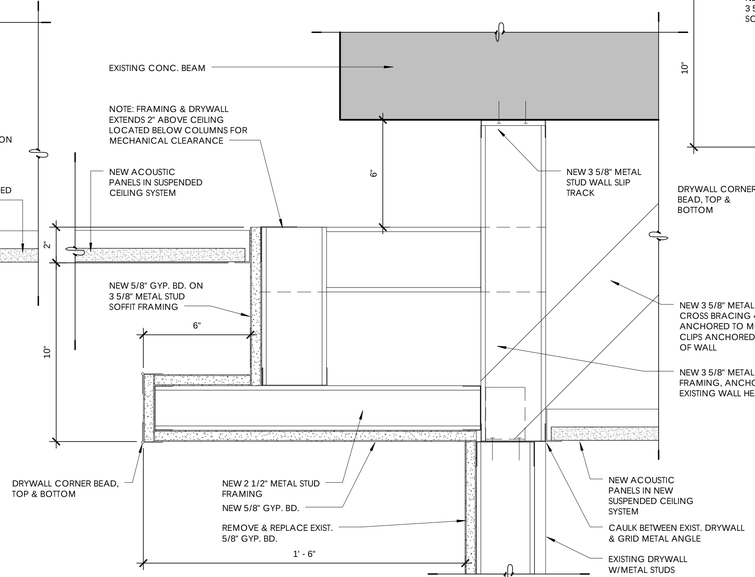

A4 CEILING DETAIL @ LEVEL 2
3" = 1'-0"

DFCM approval

SANDERS ASSOCIATES ARCHITECTS
2668 Grant Avenue
Ogden, UT 84401
t 801 621.7303
www.sandersarch.com

Seal

REGISTERED PROFESSIONAL ARCHITECT
M. SHANE SANDERS
5024503-0301
UTAH

Consultant

Project Name

WSU- MILLER ADMINISTRATION

MEP Upgrades and Remodel

3848 HARRISON BLVD.
OGDEN, UTAH 84401

Issued

No.	Date	Description
1	01.16.15	DFCM PLAN REVIEW
2	02.03.15	BID DOCUMENTS

Revision

No.	Date	Description

DFCM Project No. 14031810
SAA Project No. 214016

Drawing Title

CEILING DETAILS

Sheet Number

AE541

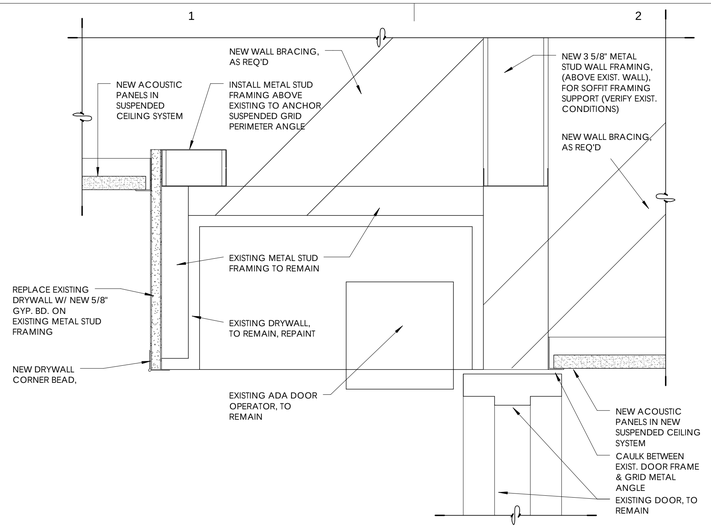

C1 CEILING DETAIL @ LEVEL 1 ADA OPERATOR

3" = 1'-0"

SUSPENDED CEILING SEISMIC BRACING NOTES

1. 2 GAUGE HANGER WIRES @ 4'-0" O.C. OR 10 GAUGE HANGER WIRES @ 5'-0" O.C. ATTACHMENT AT MAIN BEAM AND AT STRUCTURE SHALL BE SECURED WITH A MIN. OF THREE COMPLETE TURNS AND MUST BE CAPABLE OF SUPPORTING 100 LBS. TERMINAL ENDS SUPPORTED WITHIN 8" OF EACH WALL w/ 12 GA. WIRE, PLUMB TO WITHIN ONE SIX, ATTACHED TO ADJACENT WALL OR STRUCTURE ABOVE w/ A MIN. OF THREE COMPLETE TURNS.
2. UNATTACHED ENDS OF GRID MUST HAVE 3/4" CLEARANCE FROM WALL AND MUST REST UPON AND BE FREE TO SLIDE ON THE MOULDING.
3. MAIN BEAMS MUST BE HEAVY DUTY. MAIN BEAM AND CROSS TEE INTERSECTIONS AND SPLICES MUST HAVE CONNECTIONS AND TENSION.
4. RIDGED SEISMIC STRUT w/ STIFFNESS ADEQUATE TO RESIST THE VERTICAL LOADS IMPOSED, SHALL BE ATTACHED TO THE SUSPENSION SYSTEM AND TO THE STRUCTURE ABOVE @ EACH BRACING LOCATION. HORIZ. RESTRAINT POINTS SHALL BE NO MORE THAN 12'-0" O.C. IN EACH DIRECTION AND THE FIRST POINT SHALL BE WITHIN 6'-0" OF EACH WALL.
5. SPACER BAR, OR OTHER SUITABLE SYSTEM TO KEEP PERIMETER COMPONENTS FROM SPREADING APART.
6. SPLAY WIRE BRACING SHALL BE CLUSTERS OF FOUR 12-GAUGE WIRES ATTACHED TO THE MAIN BEAM WITHIN 2" OF THE CROSS TEE INTERSECTION. WIRES ARE ARRAYED 90 DEGREES FROM EACH OTHER AT ANGLE NOT EXCEEDING 45 DEGREES FROM THE PLANE OF THE CEILING . ATTACHMENT OF THE BRACING WIRES TO THE MAIN BEAM AND TO THE STRUCTURE SHALL BE CAPABLE OF SUPPORTING THE GREATER OF 200 LBS. OR THE ACTUAL DESIGN LOAD w/ A SAFETY FACTOR OF 2.
7. 7/8" WALL MOULDING BERC2 CLIP, SCREWED ON ATTACHED WALLS & UNSCREWED ON UNATTACHED WALLS. (IBC)

(NOTE: SPECIAL INSPECTION REQUIRED FOR MOUNTING CLIPS AND SUSPENDED CEILING SYSTEM) (REFER TO SPECIAL INSPECTION, MATERIAL TESTING & STRUCTURAL OBSERVATION ITEMS SHEET GI004)

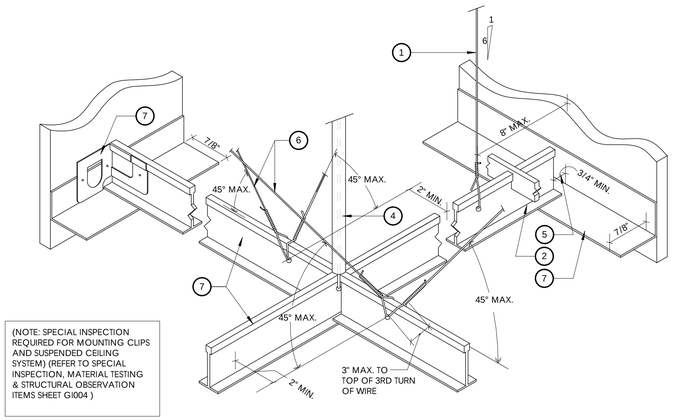

1 Suspended Ceiling Seismic Bracing Detail

3" = 1'-0"

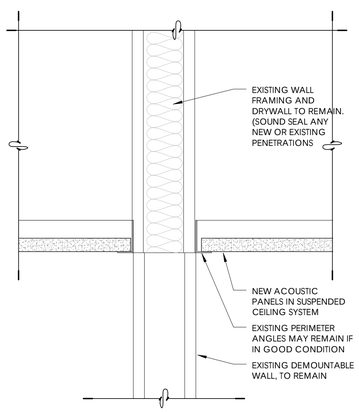

H CEILING DETAIL @ DEMOUNTABLE WALLS

3" = 1'-0"

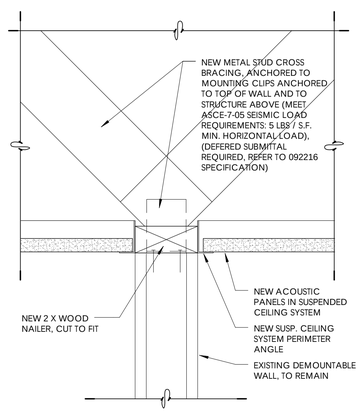

G CEILING DETAIL @ DEMOUNTABLE WALLS

3" = 1'-0"

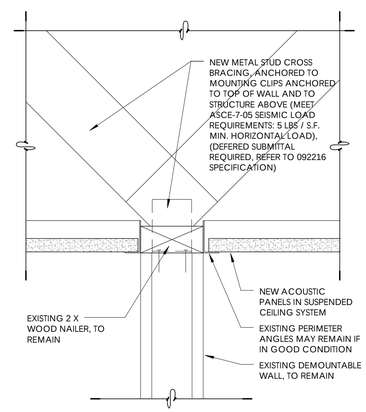

F CEILING DETAIL @ DEMOUNTABLE WALLS

3" = 1'-0"

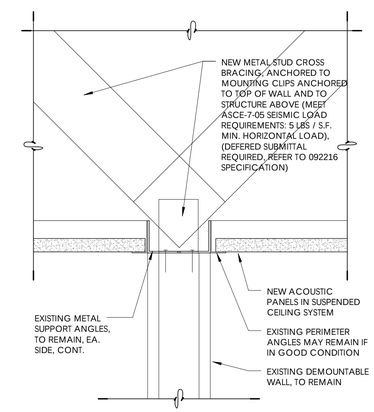

E CEILING DETAIL @ DEMOUNTABLE WALLS

3" = 1'-0"

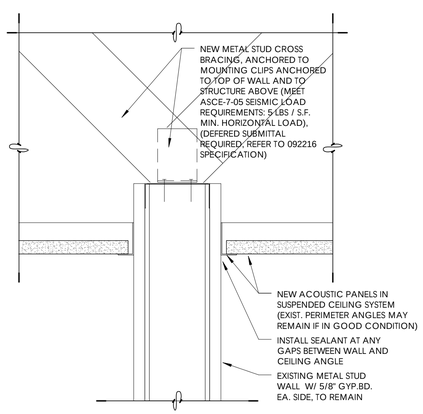

D CEILING DETAIL @ STEEL STUD WALLS

3" = 1'-0"

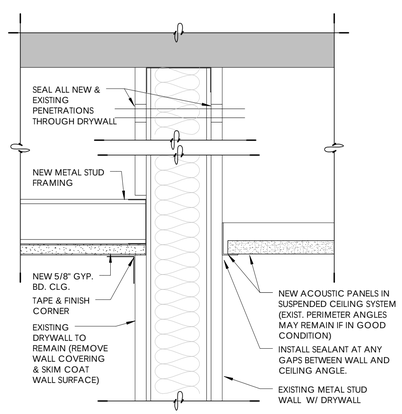

C CEILING DETAIL @ STEEL STUD WALLS

3" = 1'-0"

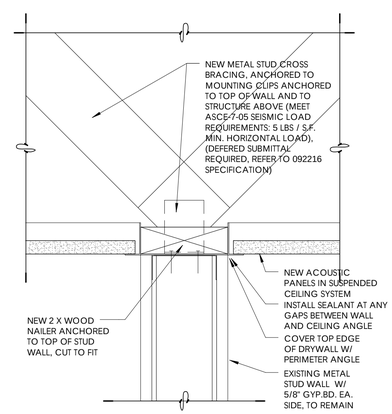

B CEILING DETAIL @ STEEL STUD WALLS

3" = 1'-0"

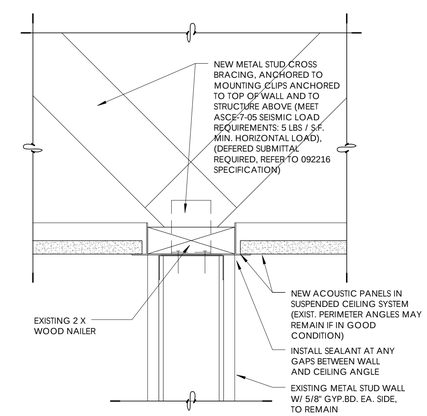

A CEILING DETAIL @ STEEL STUD WALLS

3" = 1'-0"

DFCM approval

SANDERS ASSOCIATES ARCHITECTS
2668 Grant Avenue
Ogden, UT 84401
801.621.7303
www.sandersarch.com

Seal

REGISTERED PROFESSIONAL ARCHITECT
M. SHANE SANDERS
5526563-0301
UTAH

Consultant

Project Name

WSU- MILLER ADMINISTRATION

MEP Upgrades and Remodel

3848 HARRISON BLVD.
OGDEN, UTAH 84401

Issued

No.	Date	Description
1	01.16.15	DFCM PLAN REVIEW
2	02.03.15	BID DOCUMENTS

Revision #

No.	Date	Description

DFCM Project No. 14031810

SAA Project No. 214016

Drawing Title

CEILING DETAILS

Sheet Number

AE542

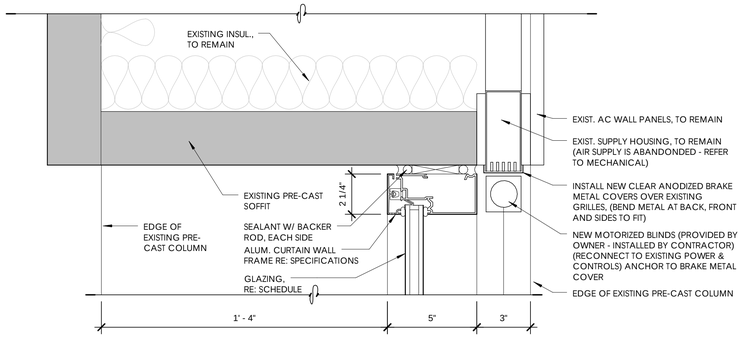

D1 Curtainwall Head (Conference Room)
3" = 1'-0"

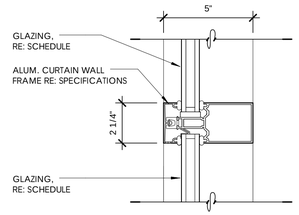

D3 Curtainwall Mullion
3" = 1'-0"

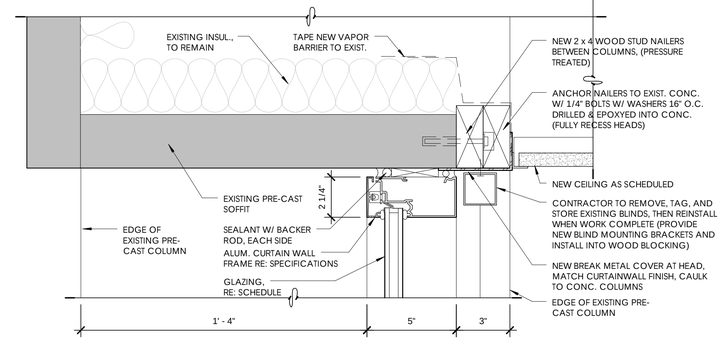

D4 Curtainwall Head
3" = 1'-0"

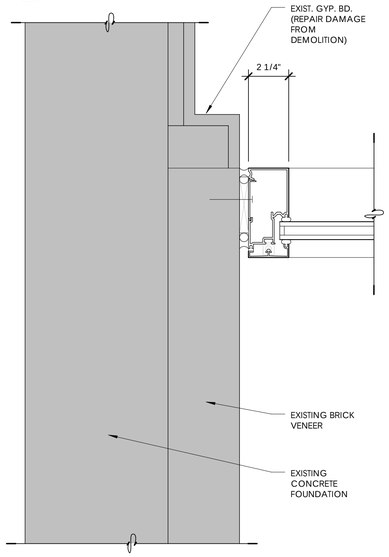

B1 Curtainwall Jamb
3" = 1'-0"

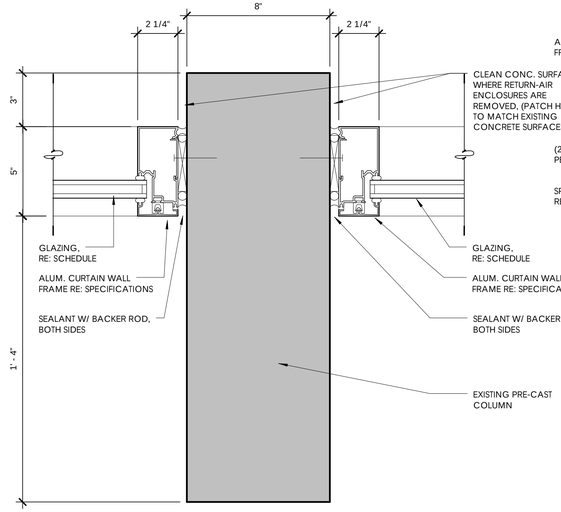

B3 Curtainwall Jamb
3" = 1'-0"

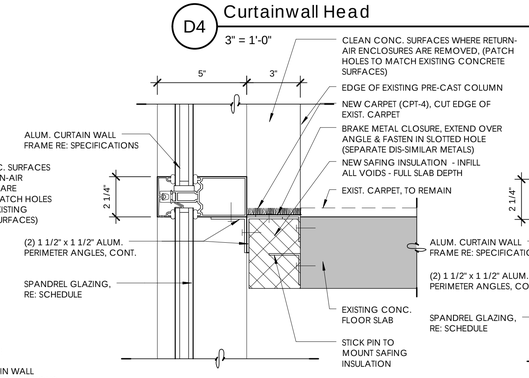

C4 Curtainwall Mullion (Level 3 Floor)
3" = 1'-0"

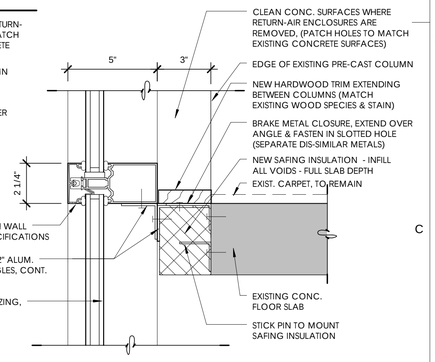

C5 Curtainwall Mullion (Conf. Rm.)
3" = 1'-0"

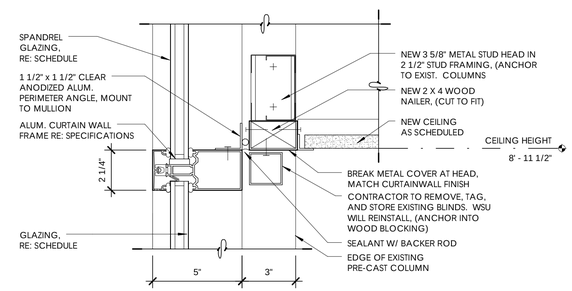

B4 Curtainwall Mullion (Level 2 Ceiling)
3" = 1'-0"

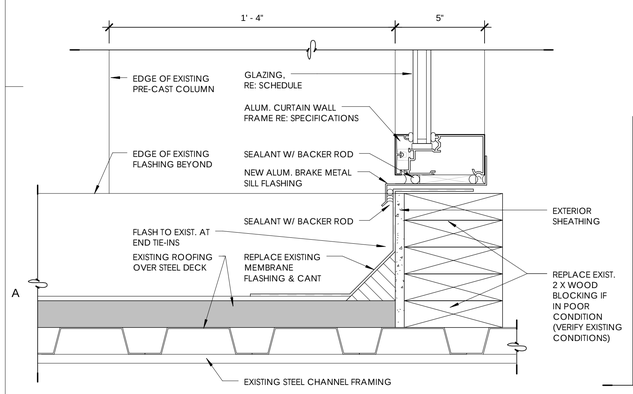

A1 Curtainwall Sill at Canopy Roof (Level 2)
3" = 1'-0"

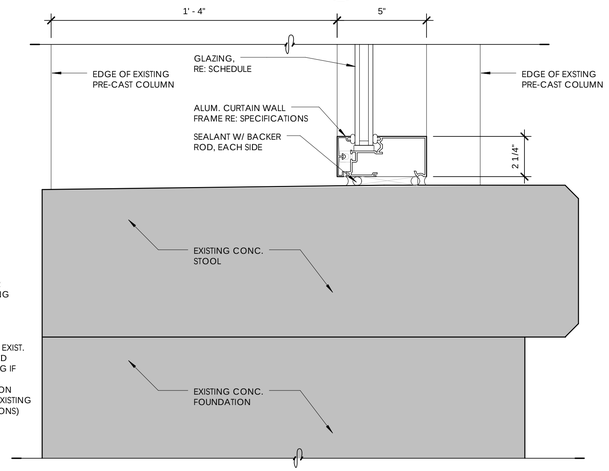

A2 Curtainwall Sill (Level 1)
3" = 1'-0"

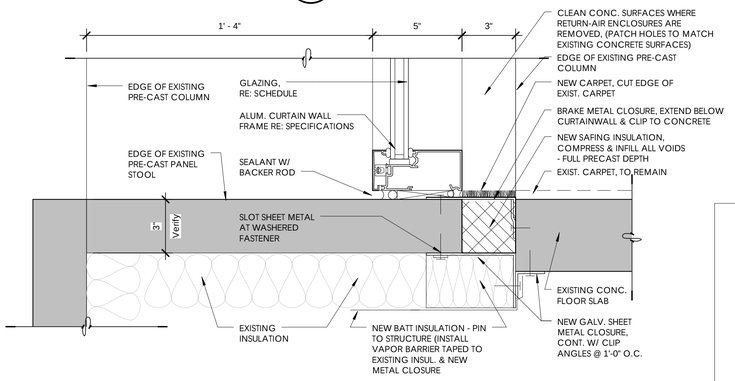

A4 Curtainwall Sill (Level 2)
3" = 1'-0"

DFCM approval

SANDERS ASSOCIATES ARCHITECTS
2668 Grant Avenue
Ogden, UT 84401
t 801.621.7303
www.sandersarch.com

Seal

REGISTERED PROFESSIONAL ARCHITECT
M. SHANE SANDERS
5594503-0301
UTAH

Consultant

Project Name

WSU- MILLER ADMINISTRATION

MEP Upgrades and Remodel

3848 HARRISON BLVD.
OGDEN, UTAH 84401

Issued

No.	Date	Description
1	01.16.15	DFCM PLAN REVIEW
2	02.03.15	BID DOCUMENTS

Revision

No.	Date	Description

DFCM Project No. 14031810
SAA Project No. 214016

Drawing Title

CURTAINWALL DETAILS

Sheet Number

AE581

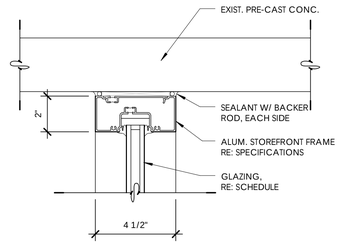

D2 Storefront Transom Head
3" = 1'-0"

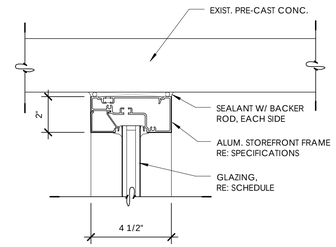

D3 Storefront Head Detail
3" = 1'-0"

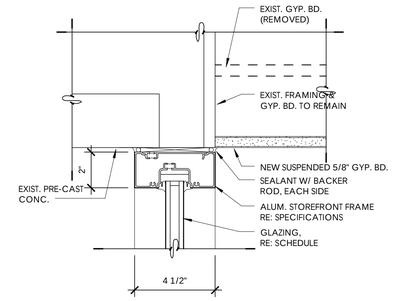

D4 Storefront Head / Transom
3" = 1'-0"

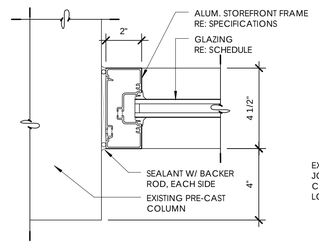

C2 Storefront Jamb Detail
3" = 1'-0"

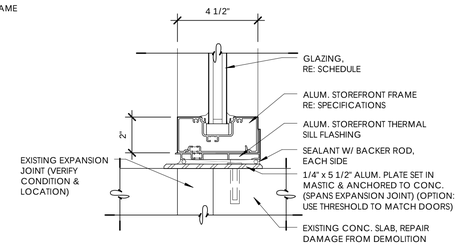

C3 Storefront Sill Detail
3" = 1'-0"

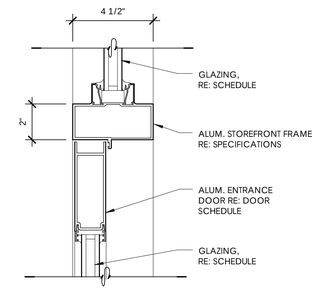

C4 Storefront Door Head / Transom
3" = 1'-0"

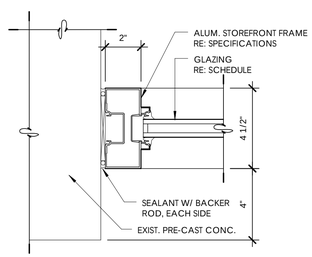

B2 Storefront Transom Jamb
3" = 1'-0"

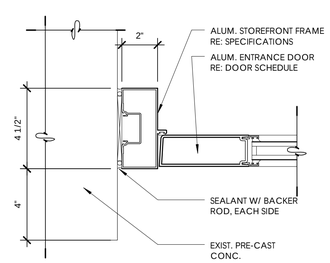

B3 Storefront Door Jamb
3" = 1'-0"

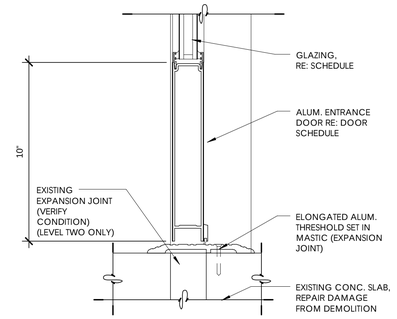

B4 Storefront Door Threshold
3" = 1'-0"

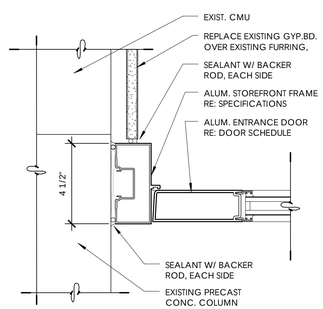

A2 Storefront Jamb Details
3" = 1'-0"

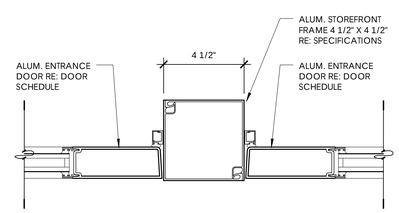

A3 Storefront Door Mullion Detail
3" = 1'-0"

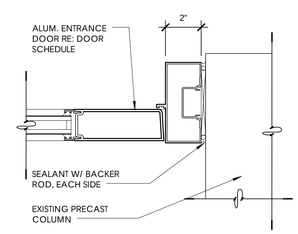

A4 Storefront Door Jamb
3" = 1'-0"

DFCM approval

SANDERS ASSOCIATES ARCHITECTS
2668 Grant Avenue
Ogden, UT 84401
t: 801.621.7303
www.sandersarch.com

Seal

REGISTERED PROFESSIONAL ARCHITECT
M. SHANE SANDERS
5024503-0301
UTAH

Consultant

Project Name

WSU- MILLER ADMINISTRATION

MEP Upgrades and Remodel

3848 HARRISON BLVD.
OGDEN, UTAH 84401

Issued

No.	Date	Description
1	01.16.15	DFCM PLAN REVIEW
2	02.03.15	BID DOCUMENTS

Revision

No.	Date	Description

DFCM Project No. 14031810
SAA Project No. 214016

Drawing Title

STOREFRONT DETAILS

Sheet Number

AE582

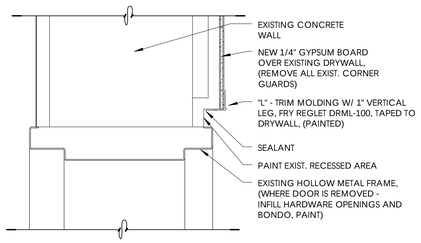

D1 Exist. Hollow Metal Door Head & Jamb
3" = 1'-0"

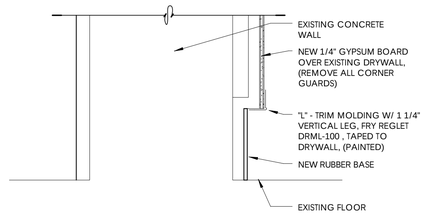

D2 Base Detail
3" = 1'-0"

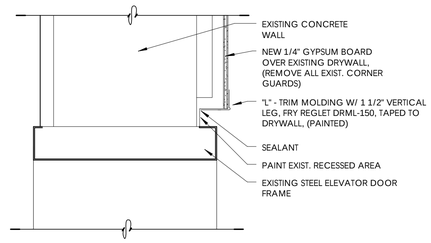

D3 Exist. Elevator Door Head & Jamb
3" = 1'-0"

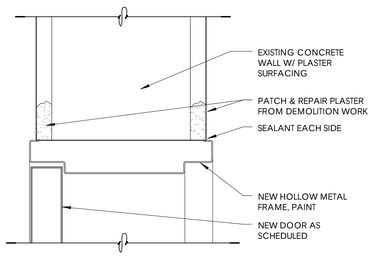

C1 Hollow Metal Door Head & Jamb
3" = 1'-0"

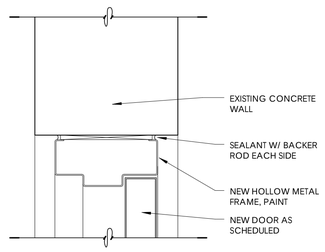

C2 Hollow Metal Door Head & Jamb
3" = 1'-0"

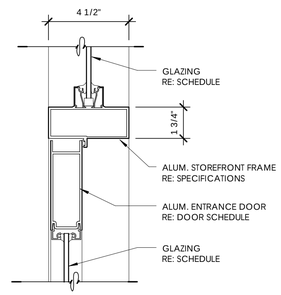

C3 Storefront Door Head / Transom
3" = 1'-0"

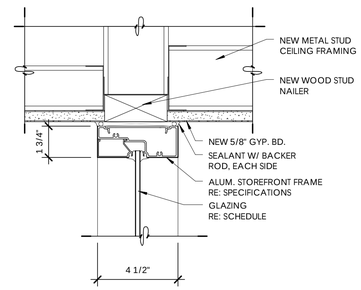

C4 Storefront Head Detail
3" = 1'-0"

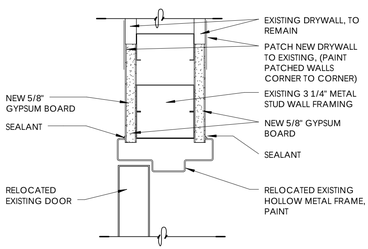

B1 Relocated Hollow Metal Frame
3" = 1'-0"

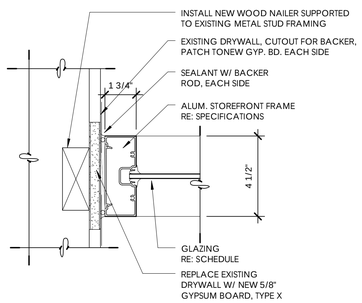

B2 Storefront Jamb Detail
3" = 1'-0"

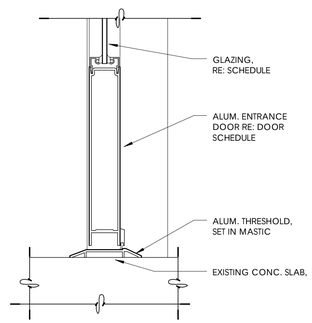

B3 Storefront Door Sill
3" = 1'-0"

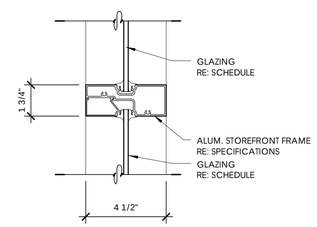

B4 Storefront Horiz. Mullion
3" = 1'-0"

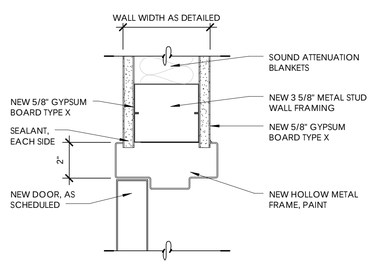

A1 New Hollow Metal Jamb / Head Sim.
3" = 1'-0"

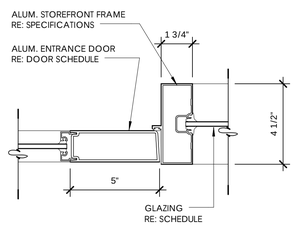

A2 Storefront Door Mullion
3" = 1'-0"

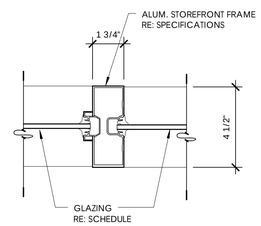

A3 Storefront Transom Mullion
3" = 1'-0"

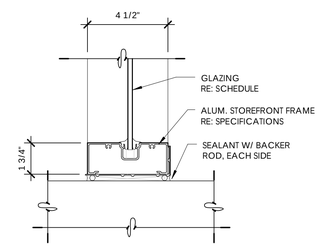

A4 Storefront Sill Detail
3" = 1'-0"

DFCM approval

SANDERS ASSOCIATES ARCHITECTS
2668 Grant Avenue
Ogden, UT 84401
t: 801.621.7303
www.sandersarch.com

Seal

REGISTERED PROFESSIONAL ARCHITECT
M. SHANE SANDERS
5204503-0301
UTAH

Consultant

Project Name

WSU- MILLER ADMINISTRATION
MEP Upgrades and Remodel
3848 HARRISON BLVD.
OGDEN, UTAH 84401

Issued

No.	Date	Description
1	01.16.15	DFCM PLAN REVIEW
2	02.03.15	BID DOCUMENTS

Revision

No.	Date	Description

DFCM Project No. 14031810
SAA Project No. 214016

Drawing Title

STOREFRONT & HOLLOW METAL DETAILS

Sheet Number

AE583

DOOR SCHEDULE

NO.	DOOR TYPE	LEAVES	WIDTH	HEIGHT	THICKNESS	MATERIAL	FRAME TYPE	FRAME MATERIAL	JAMB DETAIL	HEAD DETAIL	SILL DETAIL	ELECTRICAL	FIRE RATING	HARDWARE	COMMENTS (REFER TO SPECIFICATIONS FOR DOOR HARDWARE SCHEDULE)	NO.
100 A	A	1	3' - 3 3/4"	7' - 0"	0' - 1 3/4"	ALUM.	W7	ALUM.	A2/AE582	C4/AE582	B4/AE582	2		2	FIELD VERIFY FRAME OPENING SIZE	100 A
100 B	A	1	3' - 3 3/4"	7' - 0"	0' - 1 3/4"	ALUM.	W7	ALUM.	A4/AE582	C4/AE582	B4/AE582	4		1.5	FIELD VERIFY FRAME OPENING SIZE	100 B
100 C	B	1	3' - 0"	7' - 0"	0' - 1 3/4"	ALUM.	W10	ALUM.	A2/AE583	C3/AE583	B3/AE583	1		3		100 C
100 D	B	1	3' - 0"	7' - 0"	0' - 1 3/4"	ALUM.	W10	ALUM.	A2/AE583	C3/AE583	B3/AE583			4		100 D
100 E	D	2	3' - 0"	7' - 0"	0' - 1 3/4"	WOOD	W12	H.M.	A1/AE583	A1/AE583	-	5	60 MIN.	8	FIELD VERIFY FRAME OPENING SIZE	100 E
100B A	D	1	3' - 0"	7' - 0"	0' - 1 3/4"	WOOD	W12	H.M.	C1/AE583	C1/AE583	-	5	60 MIN.	7	FIELD VERIFY FRAME OPENING SIZE	100B A
101 A	D	1	3' - 0"	7' - 0"	0' - 1 3/4"	WOOD	W12	H.M.	A1/AE583	A1/AE583	-		60 MIN.	9		101 A
102 A	D	1	3' - 0"	7' - 0"	0' - 1 3/4"	WOOD	W12	H.M.	A1/AE583	A1/AE583	-		60 MIN.	9		102 A
102F A	D	1	3' - 0"	7' - 0"	0' - 1 3/4"	WOOD	W12	H.M.	A1/AE583	A1/AE583	-		60 MIN.	9		102F A
103P A	D	1	3' - 0"	7' - 0"	0' - 1 3/4"	WOOD	W12	H.M.	A1/AE583	A1/AE583	-		60 MIN.	9		103P A
201 A	A	1	3' - 0"	7' - 0"	0' - 1 3/4"	ALUM.	W9	ALUM.	B3/AE582	C4/AE582	B4/AE582	3		1	FIELD VERIFY FRAME OPENING SIZE	201 A
201 B	A	1	3' - 0"	7' - 0"	0' - 1 3/4"	ALUM.	W9	ALUM.	B3/AE582	C4/AE582	B4/AE582	3		1	FIELD VERIFY FRAME OPENING SIZE	201 B
201 C	B	1	3' - 0"	7' - 0"	0' - 1 3/4"	ALUM.	W11	ALUM.	A2/AE583	C3/AE583	B3/AE583			4		201 C
201 D	B	1	3' - 0"	7' - 0"	0' - 1 3/4"	ALUM.	W11	ALUM.	A2/AE583	C3/AE583	B3/AE583			4		201 D
206 A	EXIST.	1	3' - 0"	7' - 0"	0' - 1 3/4"	EXIST.	EXIST.	H.M.	-	-	-			6	FIELD VERIFY FRAME OPENING SIZE	206 A
208 A	A	1	3' - 0"	7' - 0"	0' - 1 3/4"	ALUM.	W9	ALUM.	B3/AE582	C4/AE582	B4/AE582	3		1	FIELD VERIFY FRAME OPENING SIZE	208 A
208 B	A	1	3' - 0"	7' - 0"	0' - 1 3/4"	ALUM.	W9	ALUM.	B3/AE582	C4/AE582	B4/AE582	3		1	FIELD VERIFY FRAME OPENING SIZE	208 B
208 C	B	1	3' - 0"	7' - 0"	0' - 1 3/4"	ALUM.	W11	ALUM.	A2/AE583	C3/AE583	B3/AE583			4		208 C
208 D	B	1	3' - 0"	7' - 0"	0' - 1 3/4"	ALUM.	W11	ALUM.	A2/AE583	C3/AE583	B3/AE583			4		208 D
212 A	D	1	3' - 0"	7' - 0"	0' - 1 3/4"	WOOD	W12	H.M.	C1/AE583	C1/AE583	-	5	60 MIN.	7	FIELD VERIFY FRAME OPENING SIZE	212 A
213 A	EXIST.	1	3' - 0"	7' - 0"	0' - 1 3/4"	EXIST.	EXIST.	H.M.	-	-	-			6	FIELD VERIFY FRAME OPENING SIZE	213 A
305 A	EXIST.	1	3' - 0"	7' - 0"	0' - 1 3/4"	EXIST.	EXIST.	H.M.	-	-	-			6	FIELD VERIFY FRAME OPENING SIZE	305 A
308 A	EXIST.	1	3' - 0"	7' - 11"	0' - 1 3/4"	EXIST.	EXIST.	H.M.	-	-	-			EXIST.	RELOCATED DOOR, FRAME & HARDWARE	308 A
315 A	EXIST.	1	3' - 0"	7' - 0"	0' - 1 3/4"	EXIST.	EXIST.	H.M.	-	-	-			6	FIELD VERIFY FRAME OPENING SIZE	315 A
400 A	C	1	1' - 10"	6' - 0"	0' - 1 3/4"	H.M.	W12	H.M.	C2/AE582	C2/AE582	-		60 MIN.	5	FIELD VERIFY FRAME OPENING SIZE	400 A

DOOR SCHEDULE COMMENTS

1. PROVIDE ELECTRICAL CONNECTION TO NEW POWER SUPPLY FOR ADA AUTOMATIC DOOR OPERATOR AND WIRING TO RECESSED WALL ACTUATORS. (REFER TO ELECTRICAL).
2. PROVIDE ELECTRICAL CONNECTION TO NEW POWER SUPPLY FOR ADA AUTOMATIC DOOR OPERATOR, RECESSED WALL ACTUATORS AND CARD READER, PROVIDE WITH NEW SEQUENCER. PROVIDE ELECTRICAL CONNECTION TO EXISTING "LENEL" TIMER SYSTEM. (REFER TO ELECTRICAL).
3. PROVIDE ELECTRICAL CONNECTION TO "LENEL" TIMER SYSTEM & NEW POWER SUPPLY. (REFER TO ELECTRICAL).
4. PROVIDE ELECTRICAL CONNECTION TO NEW POWER SUPPLY FOR REINSTALLED CARD READER. (NOTE: 100A AND 100B ARE BOTH CONNECTED TO A SINGLE CARD READER.) (REFER TO ELECTRICAL).PROVIDE ELECTRICAL CONNECTIO TO EXISTING "LENEL" TIMER SYSTEM. (REFER TO ELECTRICAL).
5. PROVIDE ELECTRICAL CONNECTION TO NEW HOLD-OPEN DEVICE AND CONNECTION TO FIRE ALARM SYSTEM. (REFER TO ELECTRICAL).

PANEL SCHEDULE

	GLASS TYPE	COMMENTS
GL-1	1" INSUL - LOW E - TINTED	
GL-2	1" INSUL - LOW E - TINTED - TEMPERED	
GL-3	1" INSUL - TINTED - SPANDREL GLASS	
GL-4	1" INSUL - LOW E - TINTED - TEMPERED - ACID ETCHED	
GL-5	1/4" CLEAR - TEMPERED	

(REFER TO SPECIFICATIONS FOR GLAZING SCHEDULE)

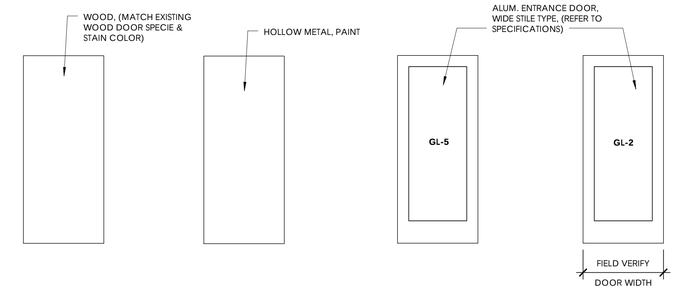

4 Door Type D 3/8" = 1'-0"

3 Door Type C 3/8" = 1'-0"

2 Door Type B 3/8" = 1'-0"

1 Door Type A 3/8" = 1'-0"

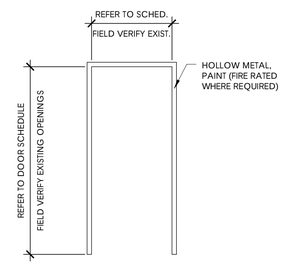

W12 Hollow Metal Frame 3/8" = 1'-0"

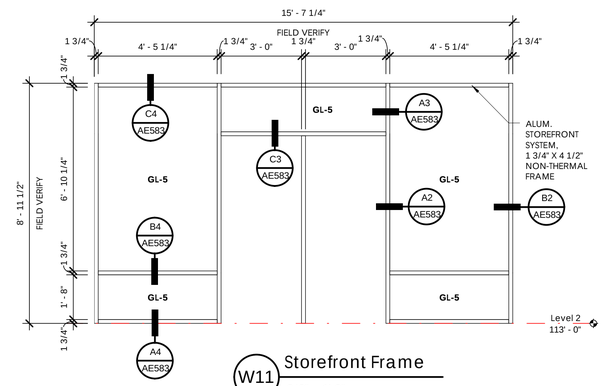

W11 Storefront Frame 3/8" = 1'-0"

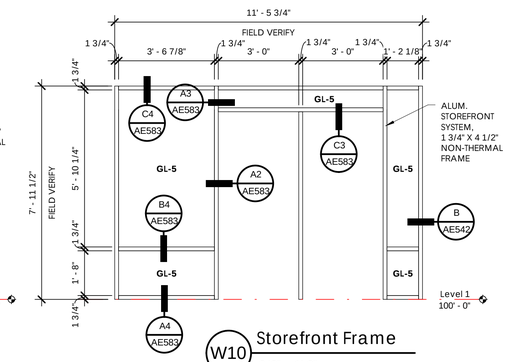

W10 Storefront Frame 3/8" = 1'-0"

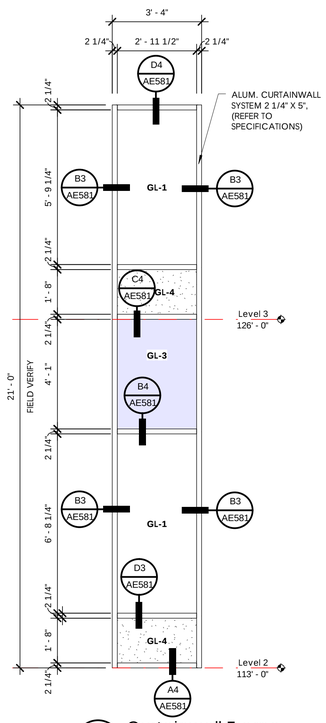

W5 Curtainwall Frame 3/8" = 1'-0"

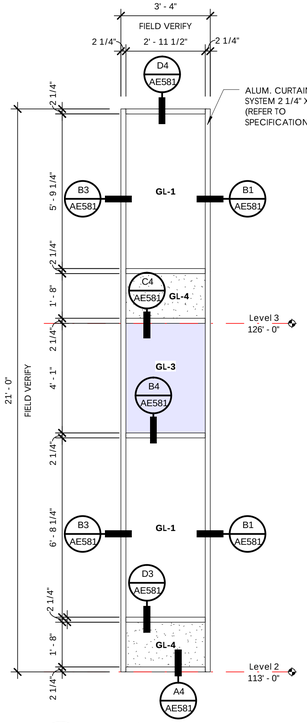

W4 Curtainwall Frame 3/8" = 1'-0"

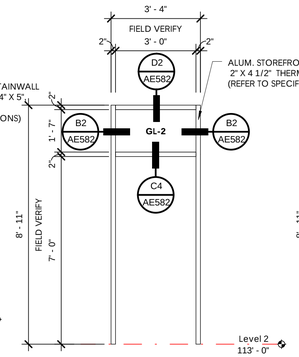

W9 Storefront Frame 3/8" = 1'-0"

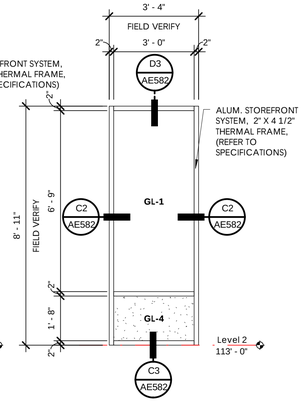

W8 Storefront Frame 3/8" = 1'-0"

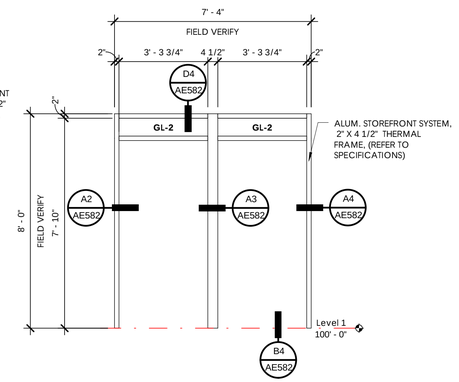

W7 Storefront Frame 3/8" = 1'-0"

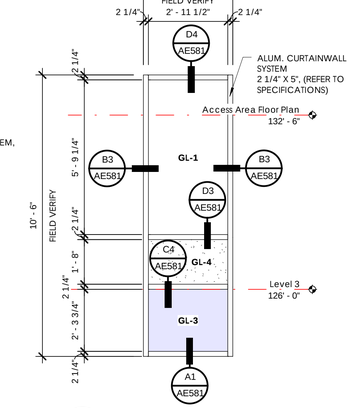

W6 Curtainwall Frame 3/8" = 1'-0"

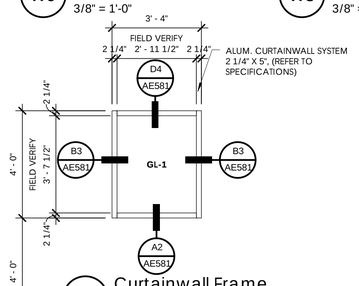

W3 Curtainwall Frame 3/8" = 1'-0"

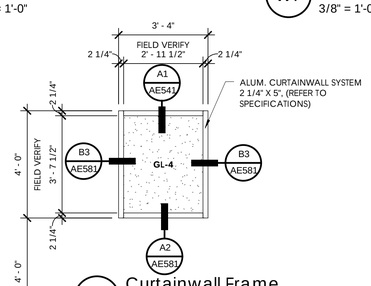

W2 Curtainwall Frame 3/8" = 1'-0"

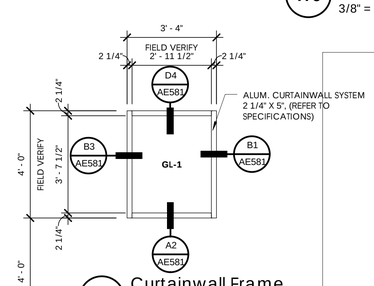

W1 Curtainwall Frame 3/8" = 1'-0"

DFCM approval

SANDERS ASSOCIATES ARCHITECTS
2668 Grant Avenue
Ogden, UT 84401
801.621.7303
www.sandersarch.com

Seal

Consultant

Project Name

WSU- MILLER ADMINISTRATION
MEP Upgrades and Remodel
3848 HARRISON BLVD.
OGDEN, UTAH 84401

Issued

No.	Date	Description
1	01.16.15	DFCM PLAN REVIEW
2	02.03.15	BID DOCUMENTS

Revision

No.	Date	Description

DFCM Project No. 14031810

SAA Project No. 214016

Drawing Title

DOOR SCHEDULE & FRAME TYPES

Sheet Number

AE621

BXUV.U419 - Fire Resistance Ratings - ANSI/UL 263

ONLINE CERTIFICATIONS DIRECTORY

Design No. U419
BXUV.U419
Fire Resistance Ratings - ANSI/UL 263

Page Bottom

Design/System/Construction/Assembly Usage Disclaimer

- Authorities Having Jurisdiction should be consulted in all cases as to the particular requirements covering the installation and use of UL Listed or Classified products, equipment, system, devices, and materials.
- Authorities Having Jurisdiction should be consulted before construction.
- Fire resistance assemblies and products are developed by the design submitter and have been investigated by UL for compliance with applicable requirements. The published information cannot always address every construction nuance encountered in the field.
- When field issues arise, it is recommended the first contact for assistance be the technical service staff provided by the product manufacturer noted for the design. Users of fire resistance assemblies are advised to consult the general Guide Information for each product category and each group of assemblies. The Guide Information includes specifics concerning alternate materials and alternate methods of construction.
- Only products which bear UL's Mark are considered as Classified, Listed, or Recognized.

Fire-resistance Ratings - ANSI/UL 263

See General Information for Fire-resistance Ratings - ANSI/UL 263

Design No. U419

February 19, 2013

Nonbearing Wall Ratings — 1, 2, 3 or 4 Hr (See Items 4 & 5)

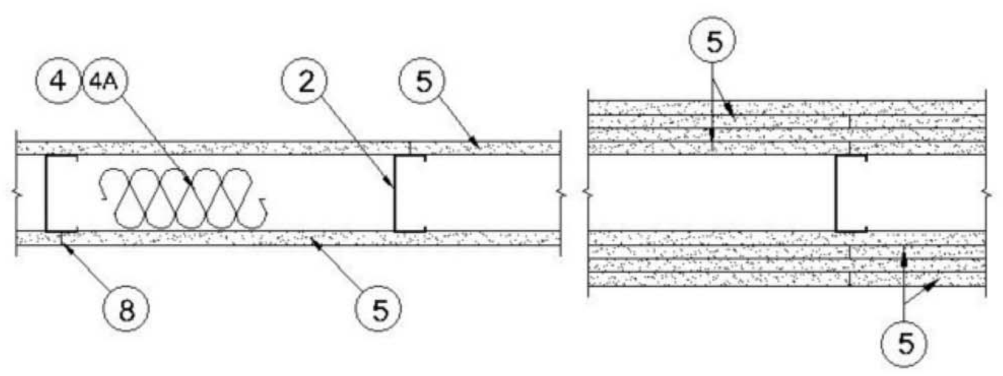

BXUV.U419 - Fire Resistance Ratings - ANSI/UL 263

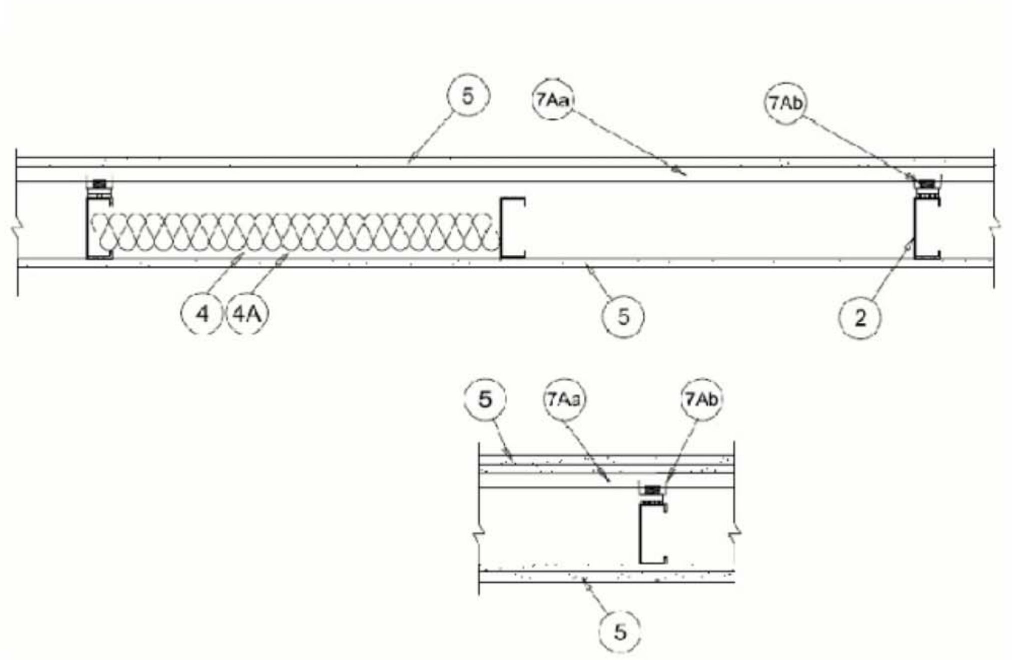

1. **Floor and Ceiling Runners —** (Not shown) — For use with Item 2 - Channel shaped, fabricated from min 25 MSG corrosion-protected steel, min depth to accommodate stud size, with min 1-1/4 in. long legs, attached to floor and ceiling with fasteners 24 in. OC max.

1A. **Framing Members* - Floor and Ceiling Runners —** (Not shown) - In lieu of Item 1 — For use with Item 2A, proprietary channel shaped, min. 3-5/8 in. deep, fabricated from min. 0.015 in. (min bare metal thickness) galvanized steel, attached to floor and ceiling with fasteners 24 in. OC max. Effective thickness is 0.034 in.

CLARKDIETRICH BUILDING SYSTEMS — UltraSTEEL®.

1B. **Framing Members* - Floor and Ceiling Runners —** (Not shown - In lieu of Item 1) — For use with Item 2A, proprietary channel shaped, min. 2-1/2 in. deep, fabricated from min. 0.015 in. (min bare metal thickness) galvanized steel, attached to floor and ceiling fasteners 24 in. OC. max. Effective thickness is 0.034 in.

CLARKDIETRICH BUILDING SYSTEMS — UltraSTEEL®.

1C. **Framing Members* - Floor and Ceiling Runner —** Not shown - In lieu of Item 1 — For use with Item 2C, proprietary channel shaped runners, 3-5/8 in. deep attached to floor and ceiling with fasteners 24 in. OC max.

CALIFORNIA EXPANDED METAL PRODUCTS CO — Viper25™ Track

CRACO MFG INC — SmartTrack™

MARINO/WARE, DIV OF WARE INDUSTRIES INC — Viper25™ Track

PHILLIPS MFG CO L L C — Viper25™ Track

1D. **Framing Members* - Floor and Ceiling Runner —** Not shown - In lieu of Item 1 — For use with Item 2D, proprietary channel shaped runners, 1-1/4 in. wide by 3-5/8 in. deep fabricated from min 0.020 in. thick galv steel, attached to floor and ceiling with fasteners spaced 24 in. OC max.

CALIFORNIA EXPANDED METAL PRODUCTS CO — Viper20™ Track

MARINO/WARE, DIV OF WARE INDUSTRIES INC — Viper20™ Track

BXUV.U419 - Fire Resistance Ratings - ANSI/UL 263

PHILLIPS MFG CO L L C — Viper20™ Track

1E. **Framing Members*— Floor and Ceiling Runners —** (Not shown) — In lieu of Item 1 - Channel shaped, attached to floor and ceiling with fasteners 24 in. OC. max.

ALLSTEEL & GYPSUM PRODUCTS INC — Type SUPREME Framing System

CONSOLIDATED FABRICATORS CORP, BUILDING PRODUCTS DIV — Type SUPREME Framing System

QUAIL RUN BUILDING MATERIALS INC — Type SUPREME Framing System

SCAFCO STEEL STUD MANUFACTURING CO — Type SUPREME Framing System

STEEL CONSTRUCTION SYSTEMS INC — Type SUPREME Framing System

UNITED METAL PRODUCTS INC — Type SUPREME Framing System

1F. **Floor and Ceiling Runners —** (Not shown)—For use with Item 2B- Channel shaped, fabricated from min 20 MSG corrosion-protected or galv steel, min depth to accommodate stud size, with min 1 in. long legs, attached to floor and ceiling with fasteners spaced max 24 in. OC.

1G. **Framing Members*— Floor and Ceiling Runners —** (Not shown, As an alternate to Item 1) — For use with Items 2F, 5F or 5G or 5I only, channel shaped, fabricated from min. 0.015 in. (min bare metal thickness) galvanized steel, attached to floor and ceiling with fasteners 24 in. OC. max.

CLARKDIETRICH BUILDING SYSTEMS — CD ProTRAK

DMFCWBS L L C — ProTRAK

MBA BUILDING SUPPLIES — ProTRAK

RAM SALES L L C — Ram ProTRAK

SOUTHEASTERN STUD & COMPONENTS INC — ProTRAK

STEEL STRUCTURAL SYSTEMS L L C — Tri-S ProTRAK

1H. **Framing Members* - Floor and Ceiling Runner —** Not shown - In lieu of Item 1 — For use with Item 2G, proprietary channel shaped runners, minimum width to accommodate stud size, with 1- 1/8 in. long legs fabricated from min 0.015 in. (min bare metal thickness) galv steel, attached to floor and ceiling with fasteners spaced 24 in. OC max.

SUPER STUD BUILDING PRODUCTS — The Edge

1I. **Framing Members* - Floor and Ceiling Runner —** For use with Item 2H, proprietary channel shaped runners, minimum width to accommodate stud size attached to floor and ceiling with fasteners 24 in. OC max.

STUDCO BUILDING SYSTEMS — CROCSTUD Track

1J. **Floor and Ceiling Runners —** (Not shown) — Channel shaped, fabricated from min 0.02 in. galv steel, min width to accommodate stud size, with min 1 in. long legs, for use with studs specified below and fabricated from min 0.02 in. galv steel or thicker, attached to floor and ceiling with fasteners spaced max 24 in. OC.

MARINO/WARE, DIV OF WARE INDUSTRIES INC — Viper20™ Track VT100.

BXUV.U419 - Fire Resistance Ratings - ANSI/UL 263

1K. **Framing Members*— Floor and Ceiling Runners —** (Not shown, As an alternate to Item 1) — For use with Items 2I, channel shaped, fabricated from min. 0.015 in. (min bare metal thickness) galvanized steel, attached to floor and ceiling with fasteners 24 in. OC. max.

TELLING INDUSTRIES L L C — TRUE-TRACK™

1L. **Framing Members* - Floor and Ceiling Runner —** Not shown - In lieu of Item 1 — For use with Item 2J, proprietary channel shaped runners, 3-5/8 in. deep attached to floor and ceiling with fasteners 24 in. OC max.

TELLING INDUSTRIES L L C — Viper25™ Track

1M. **Framing Members* - Floor and Ceiling Runner —** Not shown - In lieu of Item 1 — For use with Item 2K, proprietary channel shaped runners, 1-1/4 in. wide by 3-5/8 in. deep fabricated from min 0.020 in. thick galv steel, attached to floor and ceiling with fasteners spaced 24 in. OC max.

TELLING INDUSTRIES L L C — Viper20™ Track

2. **Steel Studs —** Channel shaped, fabricated from min 25 MSG corrosion-protected steel, min depth as indicated under Item 5, spaced a max of 24 in. OC. Studs to be cut 3/8 to 3/4 in. less than assembly height.

2A. **Framing Members* - Steel Studs —** In lieu of Item 2 - Proprietary channel shaped studs, min. depth as indicated under Item 5, fabricated from min. 0.015 in. (min bare metal thickness) galvanized steel, spaced a max of 24 in. OC. Studs to be cut 3/4 in. less than assembly height. Allowable use of studs is shown in the table below. For direct attachment of gypsum board only. Effective thickness is 0.034 in.

CLARKDIETRICH BUILDING SYSTEMS — UltraSTEEL®.

2B. **Steel Studs —** (As an alternate to Item 2, For use with Items 5B & 5E) Channel shaped, fabricated from min 20 MSG corrosion-protected or galv steel, 3-1/2 in. min depth, spaced a max of 16 in. OC. Studs friction-fit into floor and ceiling runners. Studs to be cut 5/8 to 3/4 in. less than assembly height.

2C. **Framing Members* - Steel Studs —** (As an alternate to Item 2, For use with Items 5C or 5I) - Proprietary channel shaped studs, 3-5/8 in. deep spaced a max of 24 in. OC. Studs to be cut 3/4 in less than the assembly height and installed with a ½ in. gap between the end of the stud and track at the bottom of the wall. For direct attachment of gypsum board only.

CALIFORNIA EXPANDED METAL PRODUCTS CO — Viper25™

CRACO MFG INC — SmartStud™

MARINO/WARE, DIV OF WARE INDUSTRIES INC — Viper25™

PHILLIPS MFG CO L L C — Viper25™

2D. **Framing Members* - Metal Studs —** Not shown - In lieu of Item 2 — For use with Item 1D, proprietary channel shaped steel studs, min depth as indicated under Item 5, spaced a max if 24 in. OC, fabricated from min 0.020 in. thick galv steel. Studs cut 3/8 in. to 3/4 in. less in lengths than assembly heights.

CALIFORNIA EXPANDED METAL PRODUCTS CO — Viper20™

MARINO/WARE, DIV OF WARE INDUSTRIES INC — Viper20™

PHILLIPS MFG CO L L C — Viper20™

2E. **Framing Members*— Steel Studs —** In lieu of Item 2 - For Use with Item 1E- Channel shaped studs, min depth as indicated under Item 5, spaced a max of 24 in. OC. Studs to be cut 3/4 in. less than assembly height.

ALLSTEEL & GYPSUM PRODUCTS INC — Type SUPREME Framing System

BXUV.U419 - Fire Resistance Ratings - ANSI/UL 263

CONSOLIDATED FABRICATORS CORP, BUILDING PRODUCTS DIV — Type SUPREME Framing System

QUAIL RUN BUILDING MATERIALS INC — Type SUPREME Framing System

SCAFCO STEEL STUD MANUFACTURING CO — Type SUPREME Framing System

STEEL CONSTRUCTION SYSTEMS INC — Type SUPREME Framing System

UNITED METAL PRODUCTS INC — Type SUPREME Framing System

2F. **Framing Members*— Steel Studs —** (Not shown, As an alternate to Item 2) —For use with Items 1G, 5F or 5G or 5I only, channel shaped studs, min depth as indicated under Item 5F, 5G or 5I, fabricated from min. 0.015 in. (min bare metal thickness) galvanized steel, spaced a max of 24 in. OC. Studs to be cut 3/4 in. less than assembly height.

CLARKDIETRICH BUILDING SYSTEMS — CD ProSTUD

DMFCWBS L L C — ProSTUD

MBA BUILDING SUPPLIES — ProSTUD

RAM SALES L L C — Ram ProSTUD

SOUTHEASTERN STUD & COMPONENTS INC — ProSTUD

STEEL STRUCTURAL SYSTEMS L L C — Tri-S ProSTUD

2G. **Framing Members* - Metal Studs —** Not shown - In lieu of Item 2 — For use with Item 1H, proprietary channel shaped steel studs, minimum width indicated under Item 5, 1-1/4 in. deep fabricated from min 0.015 in. (min bare metal thickness) galvanized steel. Studs 3/8 in. to 3/4 in. less in lengths than assembly heights.

SUPER STUD BUILDING PRODUCTS — The Edge

2H. **Framing Members* - Steel Studs —** Not shown - In lieu of Item 2 - For use with Item 1I. Proprietary channel shaped studs, minimum width indicated under Item 5, Studs to be cut 3/8 to 3/4 in less than the assembly height.

STUDCO BUILDING SYSTEMS — CROCSTUD

2I. **Framing Members*— Steel Studs —** (Not shown, As an alternate to Item 2) —For use with Items 1K, fabricated from min. 0.015 in. (min bare metal thickness) galvanized steel, spaced a max of 24 in. OC. Studs to be cut 3/4 in. less than assembly height.

TELLING INDUSTRIES L L C — TRUE-STUD™

2J. **Framing Members* - Steel Studs —** (As an alternate to Item 2, For use with Items 5C or 5L) - Proprietary channel shaped studs, 3-5/8 in. deep spaced a max of 24 in. OC. Studs to be cut 3/4 in less than the assembly height and installed with a ½ in. gap between the end of the stud and track at the bottom of the wall. For direct attachment of gypsum board only.

TELLING INDUSTRIES L L C — Viper25™

2K. **Framing Members* - Metal Studs —** Not shown - In lieu of Item 2 — For use with Item 1M, proprietary channel shaped steel studs, min depth as indicated under Item 5, spaced a max if 24 in. OC, fabricated from min 0.020 in. thick galv steel. Studs cut 3/8 in. to 3/4 in. less in lengths than assembly heights

TELLING INDUSTRIES L L C — Viper20™

BXUV.U419 - Fire Resistance Ratings - ANSI/UL 263

3. **Wood Structural Panel Sheathing —** (Optional, For use with Item 5 Only.)- (Not Shown) - 4 ft wide, 7/16 in. thick oriented strand board (OSB) or 15/32 in. thick structural 1 sheathing (plywood) complying with DOC PS1 or PS2, or APA Standard PRP-108, manufactured with exterior glue, applied horizontally or vertically to the steel studs. Vertical joints centered on studs, and staggered one stud space from wallboard joints. Attached to studs with flat-head self-drilling tapping screws with a min. head diam. of 0.292 in. at maximum 6 in. OC. in the perimeter and 12 in. OC. in the field. When used, fastener lengths for gypsum panels increased by min. 1/2 in.

4. **Batts and Blankets* —** (Required as indicated under Item 5) — Mineral wool batts, friction fitted between studs and runners. Min nom thickness as indicated under Item 5. See **Batts and Blankets (BKNV or BZJZ) Categories** for names of Classified companies.

4A. **Batts and Blankets* —** (Optional) — Placed in stud cavities, any glass fiber or mineral wool insulation bearing the UL Classification Marking as to Surface Burning Characteristics and/or Fire Resistance. See **Batts and Blankets (BKNV or BZJZ) Categories** for names of Classified companies.

5. **Gypsum Board* —** Gypsum panels with beveled, square or tapered edges, applied vertically or horizontally. Vertical joints centered over studs and staggered one stud cavity on opposite sides of studs. Vertical joints in adjacent layers (multilayer systems) staggered one stud cavity. Horizontal joints need not be backed by steel framing. Horizontal edge joints and horizontal butt joints on opposite sides of studs need not be staggered. Horizontal edge joints and horizontal butt joints in adjacent layers (multilayer systems) staggered a min of 12 in. The thickness and number of layers for the 1 hr, 2 hr, 3 hr and 4 hr ratings are as follows:

Gypsum Board Protection on Each Side of Wall

Rating, Hr	Min Stud Depth, in. Items 2, 2D, 2E, 2G and 2H	Min Stud Depth, in. Item 2A	No. of Layers & Thkns of Panel	Min Thkns of Insulation (Item 4)
1	3-1/2	3-5/8	1 layer, 5/8 in. thick	Optional
1	2-1/2	3-5/8	1 layer, 1/2 in. thick	1-1/2 in.
1	1-5/8	3-5/8	1 layer, 3/4 in. thick	Optional
2	1-5/8	2-1/2	2 layers, 1/2 in. thick	Optional
2	1-5/8	2-1/2	2 layers, 5/8 in. thick	Optional
2	3-1/2	3-5/8	1 layer, 3/4 in. thick	3 in.
3	1-5/8	2-1/2	3 layers, 1/2 in. thick	Optional
3	1-5/8	2-1/2	2 layers, 3/4 in. thick	Optional
3	1-5/8	2-1/2	3 layers, 5/8 in. thick	Optional
4	1-5/8	2-1/2	4 layers, 5/8 in. thick	Optional
4	1-5/8	2-1/2	4 layers, 1/2 in. thick	Optional
4	2-1/2	2-1/2	2 layers, 3/4 in. thick	2 in.

CGC INC — 1/2 in. thick Type C, IP-X2 or IPC-AR; WRC, 5/8 in. thick Type AR, C, IP-AR, IP-X1, IP-X2, IPC-AR, SCX, SHX, WRX or WRC; 3/4 in. thick Types IP-X3 or ULTRACODE

UNITED STATES GYPSUM CO — 1/2 in. thick Type C, IP-X2, IPC-AR or WRC; 5/8 in. thick Type SCX, SGX, SHX, WRX, IP-X1, AR, C, WRC, FRX-G, IP-AR, IP-X2, IPC-AR ; 3/4 in. thick Types IP-X3 or ULTRACODE

USG MEXICO S A DE C V — 1/2 in. thick Type C, IP-X2, IPC-AR or WRC; 5/8 in. thick Type AR, C, IP-AR, IP-X1, IP-X2, IPC-AR, SCX, SHX, WRX, WRC or; 3/4 in. thick Types IP-X3 or ULTRACODE

When Item 7B, Steel Framing Members*, is used, Nonbearing Wall Rating is limited to 1 Hr. Min. stud depth

BXUV.U419 - Fire Resistance Ratings - ANSI/UL 263

is 3-1/2 in., min. thickness of insulation (Item 4) is 3 in., and two layers of gypsum board panels (1/2 in. or 5/8 in. thick) shall be attached to furring channels as described in Item 6. One layer of gypsum board panels (1/2 in. or 5/8 in. thick) attached to opposite side of stud without furring channels as described in Item 6.

5A. **Gypsum Board* —** (As an alternate to Item 5) — 5/8 in. thick, 24 to 54 in. wide, applied horizontally as the outer layer to one side of the assembly. Secured as described in Item 6.

CGC INC — Type SHX.

UNITED STATES GYPSUM CO — Type FRX-G, SHX.

USG MEXICO S A DE C V — Type SHX.

5B. **Gypsum Board* —** (Not Shown) - As an alternate to Item 5 when used as the base layer on one or both sides of wall when 5/8 in or ¾ in. thick products are specified. For direct attachment only to steel studs Item 2B, (not to be used with Item 3) - Nom 5/8 in. or ¾ in. may be used as alternate to all 5/8 in. or ¾ in. shown in Item 5, Wallboard Protection on Each Side of Wall table. Nom 5/8 in. or ¾ in. thick lead backed gypsum panels with beveled, square or tapered edges, applied vertically. Vertical joints centered over studs and staggered min 1 stud cavity on opposite sides of studs. Gypsum board secured to 20 MSG steel studs Item 2B with 1-1/4 in. long Type S-12 steel screws spaced 8 in. OC at perimeter and 12 in. OC in the field. To be used with Lead Batten Strips (see Item 11) or Lead Discs or Tabs (see Item 12).

RAY-BAR ENGINEERING CORP — Type RB-LBG

5C. **Gypsum Board* —** (For Use With Item 2C) Rating Limited to 1 Hour. 5/8 in. thick, 48 in. wide, Gypsum panels with beveled, square or tapered edges, applied vertically or horizontally. (Vertical Application) - The gypsum board is to be installed on each side of the studs with 1 in. long Type S coated steel screws spaced 8 in. OC starting 4 in. from the edge of the board at the vertical edges and 12 in. OC starting 6 in. from the edge of the board at the center of each board. Gypsum boards are to be secured to the top and bottom track with screws spaced 8 in. OC starting 4 in. from the board edge. Fasteners shall not penetrate through both the stud and the track at the same time. Vertical joints are to be centered over studs and staggered one stud cavity on opposite sides of studs. (Horizontal Application) - The gypsum board is to be installed on each side of the studs with 1 in. long Type S coated steel screws spaced 8 in. OC starting 4 in. from the edge of the board at the vertical edges and 12 in. OC starting 6 in. from the edge of the board at the center of each board. Gypsum boards are to be secured to the top and bottom track with screws spaced 8 in. OC starting 4 in. from the board edge. Fasteners shall not penetrate through both the stud and the track at the same time. All horizontal joints are to be backed as outlined under section VI of Volume 1 in the Fire Resistive Directory.

CGC INC — Type SCX.

UNITED STATES GYPSUM CO — Type SCX, SGX.

USG MEXICO S A DE C V — Type SCX.

5D. **Gypsum Board* —** (As an alternate to Item 5) — 5/8 in. thick, 48 in. wide, applied vertically or horizontally. Secured as described in Item 6. For use with Items 1 and 2 only.

UNITED STATES GYPSUM CO — Type USGX.

5E. **Gypsum Board* —** (Not Shown) - (As an alternate to Item 5 when used as the base layer on one or both sides of wall when 1/2 in. or 5/8 in thick products are specified, For direct attachment only to steel studs Item 2B, not to be used with Item 3). Nominal 5/8 in. thick lead backed gypsum panels with beveled, square or tapered edges, applied vertically. Vertical joints centered over studs and staggered min 1 stud cavity on opposite sides of studs. Wallboard secured to studs with 1-1/4 in. long Type S-12 (or No. 6 by 1-1/4 in. long bugle head fine driller) steel screws spaced 8 in. OC at perimeter and 12 in. OC in the field.

NEW ENGLAND LEAD BURNING CO INC, DBA NELCO — Nelco

5F. **Gypsum Board* —** (As an alternate to Item 5) — For use with Items 1G and 2F and limited to 1 Hour Rating only, Gypsum panels with beveled, square or tapered edges, applied vertically, and fastened to the steel studs with 1 in. long Type S screws spaced 8 in. OC along vertical and bottom edges and 12 in. OC in the field. Vertical joints centered over studs and staggered one stud cavity on opposite sides of studs. Steel stud depth shall be a minimum 3-5/8 in.

UNITED STATES GYPSUM CO — 5/8 in. thick Type SCX, SGX.

BXUV.U419 - Fire Resistance Ratings - ANSI/UL 263

5G. **Gypsum Board* —** (As an alternate to Item 5) — For use with Items 1G and 2F only, Gypsum panels with beveled, square or tapered edges, applied vertically or horizontally, as specified in the table below and fastened to the steel studs as described in Item 6. Vertical joints centered over studs and staggered one stud cavity on opposite sides of studs. Vertical joints in adjacent layers (multilayer systems) staggered one stud cavity. Horizontal joints need not be backed by steel framing. Horizontal edge joints and horizontal butt joints on opposite sides of studs need not be staggered. Horizontal edge joints and horizontal butt joints in adjacent layers (multilayer systems) staggered a min of 12 in. The thickness and number of layers for the 2 hr, 3 hr and 4 hr ratings are as follows:

Gypsum Board Protection on Each Side of Wall

Rating, Hr	Min Stud Depth, in. Item 2F	No. of Layers & Thickness of Panel	Min Thkns of Insulation (Item 4)
2	1-5/8	2 layers, 1/2 in. thick	Optional
2	1-5/8	2 layers, 5/8 in. thick	Optional
3	1-5/8	3 layers, 1/2 in. thick	Optional
3	1-5/8	3 layers, 5/8 in. thick	Optional
4	1-5/8	4 layers, 5/8 in. thick	Optional
4	1-5/8	4 layers, 1/2 in. thick	Optional

CGC INC — 1/2 in. thick Type C, IP-X2 or IPC-AR;, 5/8 in. thick Type AR, C, IP-AR, IP-X1, IP-X2, IPC-AR, SCX, SHX, or; 3/4 in. thick Types IP-X3 or ULTRACODE

UNITED STATES GYPSUM CO — 1/2 in. thick Type C, IP-X2, IPC-AR or; 5/8 in. thick Type SCX, SGX, SHX, IP-X1, AR, C, , FRX-G, IP-AR, IP-X2, IPC-AR ; 3/4 in. thick Types IP-X3 or ULTRACODE

USG MEXICO S A DE C V — 1/2 in. thick Type C, IP-X2, IPC-AR or; 5/8 in. thick Type AR, C, IP-AR, IP-X1, IP-X2, IPC-AR, SCX, SHX, or; 3/4 in. thick Types IP-X3 or ULTRACODE

5H. **Gypsum Board* —** (Not Shown) - (As an alternate to Item 5 when used as the base layer on one or both sides of wall when 5/8 or 3/4 in thick products are specified. For direct attachment only to steel studs Item 2B, (not to be used with Item 3) - Nom 5/8 or 3/4 in. may be used as alternate to all 5/8 or 3/4 in. shown in Item 5, Wallboard Protection on Each Side of Wall table. Nom 5/8 or 3/4 in. thick lead backed gypsum panels with beveled, square or tapered edges, applied vertically. Vertical joints centered over 20 MSG steel studs and staggered min 1 stud cavity on opposite sides of studs. Wallboard secured to studs with 1-1/4 in. long Type S-12 steel screws spaced 8 in. OC at perimeter and 12 in. OC in the field. Gypsum board secured to 20 MSG steel studs Item 2B with 1-1/4 in. long Type S-12 steel screws spaced 8 in. OC at perimeter and 12 in. OC in the field. For Joint Compound see Item 5. To be used with Lead Batten Strips (see Item 11A) or Lead Discs (see Item 12A).

MAYCO INDUSTRIES INC — Type X-Ray Shielded Gypsum

5I. **Gypsum Board* —** (As an alternate to Item 5) - Nom. 5/8 in. thick gypsum panels with beveled, square or tapered edges installed as described in Item 5. Steel stud minimum depth shall be as indicated in Item 5.

CGC INC — Type ULX

UNITED STATES GYPSUM CO — Type ULX

USG MEXICO S A DE C V — Type ULX

SANDERS ASSOCIATES ARCHITECTS
2668 Grant Avenue
Ogden, UT 84401
P : 801.621.7303
www.sandersarch.com

Seal

Consultant

Project Name

WSU- MILLER ADMINISTRATION

MEP Upgrades and Remodel

3848 HARRISON BLVD.
OGDEN, UTAH 84401

Issued

No.	Date	Description
1	01.16.15	DFCM PLAN REVIEW
2	02.03.15	BID DOCUMENTS

Revision #

No.	Date	Description

DFCM Project No. 14031810

SAA Project No. 214016

Drawing Title

UL FIRE-RATED PARTITION ASSEMBLIES

Sheet Number

AE661

DFCM approval

5J. **Gypsum Board* —** (Not Shown) - (As an alternate to Item 5 when used as the base layer on one or both sides of wall when 1/2 in. or 5/8 in thick products are specified, For direct attachment only to steel studs Item 2B, not to be used with Item 3). Nom 5/8 in. thick lead backed gypsum panels with beveled, square or tapered edges, applied vertically. Vertical joints centered over studs and staggered min 1 stud cavity on opposite sides of studs. Wallboard secured to studs with 1-1/4 in. long Type S-12 steel screws gypsum panel steel screws spaced 8 in. OC at perimeter and 12 in. OC in the field. Lead batten strips required behind vertical joints of lead backed gypsum wallboard and optional at remaining stud locations. Lead batten strips, min 2 in. wide, max 8 ft long with a max thickness of 0.14 in. placed on the face of studs and attached to the stud with construction adhesive and two 1 in. long Type S-12 pan head steel screws, one at the top of the strip and one at the bottom of the strip. Lead discs, nominal 3/8 in. diam by max 0.085 in. thick.

Compression fitted or adhered over the screw heads. Lead batten strips and discs to have a purity of 99.9% meeting the Federal specification QQ-L-201f, Grade "C".

RADIATION PROTECTION PRODUCTS INC — Type RPP - Lead Lined Drywall

6. **Fasteners —** (Not shown) — For use with Items 2 and 2F - Type S or S-12 steel screws used to attach panels to studs (Item 2) or furring channels (Item 7). **Single layer systems:** 1 in. long for 1/2 and 5/8 in. thick panels or 1-1/4 in. long for 3/4 in. thick panels, spaced 8 in. OC when panels are applied horizontally, or 8 in. OC along vertical and bottom edges and 12 in. OC in the field when panels are applied vertically. **Two layer systems:** First layer- 1 in. long for 1/2 and 5/8 in. thick panels or 1-1/4 in. long for 3/4 in. thick panels, spaced 16 in. OC. Second layer- 1-5/8 in. long for 1/2 in., 5/8 in. thick panels or 2-1/4 in. long for 3/4 in. thick panels, spaced 16 in. OC with screws offset 8 in. from first layer.**Three-layer systems:** First layer- 1 in. long for 1/2 in., 5/8 in. thick panels, spaced 24 in. OC. Second layer- 1-5/8 in. long for 1/2 in., 5/8 in. thick panels, spaced 24 in. OC. Third layer- 2-1/4 in. long for 1/2 in., 5/8 in. thick panels or 2-5/8 in. long for 5/8 in. thick panels, spaced 12 in. OC. Screws offset min 6 in. from layer below. **Four-layer systems:** First layer- 1 in. long for 1/2 in., 5/8 in. thick panels, spaced 24 in. OC. Second layer- 1-5/8 in. long for 1/2 in., 5/8 in. thick panels, spaced 24 in. OC. Third layer- 2-1/4 in. long for 1/2 in. thick panels or 2-5/8 in. long for 5/8 in. thick panels, spaced 24 in. OC. Fourth layer- 2-5/8 in. long for 1/2 in. thick panels or 3 in. long for 5/8 in. thick panels, spaced 12 in. OC. Screws offset min 6 in. from layer below.

6A. **Fasteners —** (Not shown) —For use with Item 2A - Type S or S-12 steel screws used to attach panels to studs (Item 2A). **Single layer systems:** 1 in. long for 1/2 and 5/8 in. thick panels or 1-1/4 in. long for 3/4 in. thick panels, spaced 8-1/2 in. OC with additional screws 1 in. and 2-1/2 in. from edges of the board when panels are horizontally. or 8 in. OC along vertical and bottom edges and 12 in. OC in the field when panels are applied vertically. **Two layer systems applied vertically:** First layer- 1 in. long for 1/2 and 5/8 in. thick panels or 1-1/4 in. long for 3/4 in. thick panels, spaced 16 in. OC. Second layer- 1-5/8 in. long for 1/2 in., 5/8 in. thick panels or 2-1/4 in. long for 3/4 in. thick panels, spaced 16 in. OC with screws offset 8 in. from first layer. **Two layer systems applied horizontally:** First layer- 1 in. long for 1/2 and 5/8 in. thick panels or 1-1/4 in. long for 3/4 in. thick panels, spaced 16 in. OC starting 8 in. from each edge of the board with an additional screw placed 1-1/4 in. from each edge of the board. Second layer- 1-5/8 in. long for 1/2 in., 5/8 in. thick panels or 2-1/4 in. long for 3/4 in. thick panels, spaced 16 in. OC starting 8 in. from each edge of the board with an additional screw placed 1-1/4 in. from each edge of the board with screws offset 8 in. from first layer. **Three-layer systems:** First layer- 1 in. long for 1/2 in., 5/8 in. thick panels, spaced 24 in. OC. Second layer- 1-5/8 in. long for 1/2 in., 5/8 in. thick panels, spaced 24 in. OC. Third layer- 2-1/4 in. long for 1/2 in., 5/8 in. thick panels or 2-5/8 in. long for 5/8 in. thick panels, spaced 12 in. OC. Screws offset min 6 in. from layer below. For all layers, an additional screw shall be placed 1-1/4 in. from each edge of the board. **Four-layer systems:** First layer- 1 in. long for 1/2 in., 5/8 in. thick panels, spaced 24 in. OC. Second layer- 1-5/8 in. long for 1/2 in., 5/8 in. thick panels, spaced 24 in. OC. Third layer- 2-1/4 in. long for 1/2 in. thick panels or 2-5/8 in. long for 5/8 in. thick panels, spaced 24 in. OC. Fourth layer- 2-5/8 in. long for 1/2 in. thick panels or 3 in. long for 5/8 in. thick panels, spaced 12 in. OC. Screws offset min 6 in. from layer below. For all layers, an additional screw shall be placed 1-1/4 in. from each edge of the board.

7. **Furring Channels —** (Optional, not shown, for single or double layer systems) — Resilient furring channels fabricated from min 25 MSG corrosion-protected steel, spaced vertically a max of 24 in. OC. Flange portion attached to each intersecting stud with 1/2 in. long Type S-12 steel screws. Not for use with Item 5A and 5E.

7A. **Framing Members* —** (Optional on one or both sides, not shown, for single or double layer systems) — As an alternate to Item 7, furring channels and Steel Framing Members as described below:

a. **Furring Channels —** Formed of No. 25 MSG galv steel. 2-9/16 in. or 2-23/32 in. wide by 7/8 in. deep, spaced max. 24 in. OC perpendicular to studs. Channels secured to studs as described in Item b. Gypsum board attached to furring channels as described in Item 6. Not for use with Item 5A and 5E.

b. **Steel Framing Members* —** Used to attach furring channels (Item 7Aa) to studs (Item 2). Clips spaced max. 48 in. OC. RSIC-1 and RSIC-1 (2.75) clips secured to studs with No. 8 x 1-1/2 in. minimum self-drilling, S-12 steel screw through the center grommet. RSIC-V and RSIC-V (2.75) clips secured to studs with No. 8 x 9/16 in. minimum self-drilling, S-12 steel screw through the center hole. Furring channels are friction fitted into clips. RSIC-1 and RSIC-V clips for use with 2-9/16 in. wide furring channels. RSIC-1 (2.75) and RSIC-V (2.75) clips for use with 2-23/32 in. wide furring channels.

PAC INTERNATIONAL INC — Types RSIC-1, RSIC-V, RSIC-1 (2.75), RSIC-V (2.75).

7B. **Framing Members* —** (Optional, Not Shown) — As an alternate to Item 7, for single or double layer systems, furring channels and Steel Framing Members on only one side of studs as described below:

a. **Furring Channels —** Formed of No. 25 MSG galv steel, spaced 24 in. OC perpendicular to studs. Channels secured to studs as described in Item b. Batts and Blankets placed in stud cavity as described in Item 5. Two layers of gypsum board attached to furring channels as described in Item 5. Not for use with Item 5A and 5E.

b. **Steel Framing Members* —** Used to attach furring channels (Item 7Ba) to one side of studs (Item 2) only. Clips spaced 48 in. OC., and secured to studs with two No. 8 x 2-1/2 in. coarse drywall screws, one through the hole at each end of the clip. Furring channels are friction fitted into clips.

KINETICS NOISE CONTROL INC — Type Isomax

7C. **Framing Members* —** Optional - Not Shown - Used as an alternate method to attach resilient channels (Item 7). Clips attached at each intersection of the resilient channel and the steel studs (Item 2). Resilient channels are friction fitted into clips, and then clips are secured to the steel stud with min. 1 in. long Type S-12 steel screws through the center hole of the clip and the resilient channel flange.

KEENE BUILDING PRODUCTS CO INC — Type RC Assurance.

7D. **Framing Members* —** (Not Shown) — (Optional on one or both sides, not shown, for single or double layer systems) — As an alternate to Item 7, furring channels and Steel Framing Members as described below:

a. **Furring Channels —** Formed of No. 25 MSG galv steel. 2-3/8 in. wide by 7/8 in. deep, spaced max. 24 in. OC perpendicular to studs. Channels secured to studs as described in Item b. Gypsum board attached to furring channels as described in Item 6. Not for use with Item 5A and 5E.

b. **Steel Framing Members* —** Used to attach furring channels (Item 7Aa) to studs (Item 2). Clips spaced max. 48 in. OC. GENIECLIPS secured to studs with No. 8 x 1-1/2 in. minimum self-drilling, S-12 steel screw through the center grommet. Furring channels are friction fitted into clips.

PLITEQ INC — Type GENIECLIP

8. **Joint Tape and Compound —** Vinyl or casein, dry or premixed joint compound applied in two coats to joints and screw heads of outer layers. Paper tape, nom 2 in. wide, embedded in first layer of compound over all joints of outer layer panels. Paper tape and joint compound may be omitted when gypsum panels are supplied with a square edge.

9. **Siding, Brick or Stucco —** (Optional, not shown) — Aluminum, vinyl or steel siding, brick veneer or stucco, meeting the requirements of local code agencies, installed over gypsum panels. Brick veneer attached to studs with corrugated metal wall ties attached to each stud with steel screws, not more than each sixth course of brick.

10. **Caulking and Sealants* —** (Optional, not shown) — A bead of acoustical sealant applied around the partition perimeter for sound control.

UNITED STATES GYPSUM CO — Type AS

11. **Lead Batten Strips —** (Not Shown, For Use With Item 5B) - Lead batten strips, min 1-1/2 in. wide, max 10 ft long with a max thickness of 0.125 in. Strips placed on the interior face of studs and attached from the exterior face of the stud with two 1 in. long Type S-12 pan head steel screws, one at the top of the strip and one at the bottom of the strip. Lead batten strips to have a purity of 99.9% meeting the Federal specification QQ-L-201f, Grade "C". Lead batten strips required behind vertical joints of lead backed gypsum wallboard (Item 5B) and optional at remaining stud locations. Required behind vertical joints.

11A. **Lead Batten Strips —** (Not Shown, For Use With Item 5H) Lead batten strips, 2 in. wide, max 10 ft long with a max thickness of 0.140 in. Strips placed on the face of studs and attached to the stud with two min. 1 in. long min. Type S-8 pan head steel screws, one at the top of the strip and one at the bottom of the strip or with one min. 1 in. long min. Type S-8 pan head steel screw at the top of the strip. Lead batten strips to have a purity of 99.9% meeting the Federal specification QQ-L-201f, Grades "A, B, C or D". Lead batten strips required behind vertical joints of lead backed gypsum wallboard and optional at remaining stud locations.

12. **Lead Discs or Tabs —** (Not Shown, For Use With Item 5B) - Used in lieu of or in addition to the lead batten strips (Item 11) or optional at other locations - Max 3/4 in. diam by max 0.125 in. thick lead discs compression fitted or adhered over steel screw heads or max 1/2 in. by 1-1/4 in. by max 0.125 in. thick lead tabs placed on gypsum boards (Item 5B) underneath screw locations prior to the installation of the screws. Lead discs or tabs to have a purity of 99.9% meeting the Federal specification QQ-L-201f, Grade "C".

12A. **Lead Discs —** (Not Shown, for use with Item 5H) Max 5/16 in. diam by max 0.140 in. thick lead discs compression fitted or adhered over steel screw heads. Lead discs to have a purity of 99.9% meeting the Federal Specification QQ-L-201f, Grades "A, B, C or D".

13. **Lead Batten Strips —** (Not Shown, For Use With Item 5E) Lead batten strips, 2 in. wide, max 10 ft long with a max thickness of 0.142 in. Strips placed on the face of studs and attached to the stud with two min. 1 in. long min. Type S-8 pan head steel screws, one at the top of the strip and one at the bottom of the strip or with one min. 1 in. long min. Type S-8 pan head steel screw at the top of the strip. Lead batten strips to have a purity of 99.9% meeting the Federal specification QQ-L-201f, Grade "C". Lead batten strips required behind vertical joints of lead backed gypsum wallboard (Item 5E) and optional at remaining stud locations.

14. **Lead Tabs —** (Not Shown, For Use With Item 5E) 2 in. wide, 5 in. long with a max thickness of 0.142 in. Tabs friction-fit around front face of stud, the stud folded back flange, and the back face of the stud. Tabs required at each location where a screw (that secures the gypsum boards, Item 5E) will penetrate the steel stud. Lead tabs to have a purity of 99.9% meeting the Federal specification QQ-L-201f, Grade "C". Lead tabs may be held in place with standard adhesive tape if necessary.

*Bearing the UL Classification Mark

ONLINE CERTIFICATIONS DIRECTORY

System No. W-L-1087
XHEZ.W-L-1087
Through-penetration Firestop Systems

Page Bottom

Design/System/Construction/Assembly Usage Disclaimer

- Authorities Having Jurisdiction should be consulted in all cases as to the particular requirements covering the installation and use of UL Listed or Classified products, equipment, system, devices, and materials.
- Authorities Having Jurisdiction should be consulted before construction.
- Fire resistance assemblies and products are developed by the design submitter and have been investigated by UL for compliance with applicable requirements. The published information cannot always address every construction nuance encountered in the field.
- When field issues arise, it is recommended the first contact for assistance be the technical service staff provided by the product manufacturer noted for the design. Users of fire resistance assemblies are advised to consult the general Guide Information for each product category and each group of assemblies. The Guide Information includes specifics concerning alternate materials and alternate methods of construction.
- Only products which bear UL's Mark are considered as Classified, Listed, or Recognized.

Through-penetration Firestop Systems

See General Information for Through-penetration Firestop Systems

System No. W-L-1087

February 19, 1997

F Rating — 1 Hr

T Ratings — 0 and 1 Hr (See Item 2)

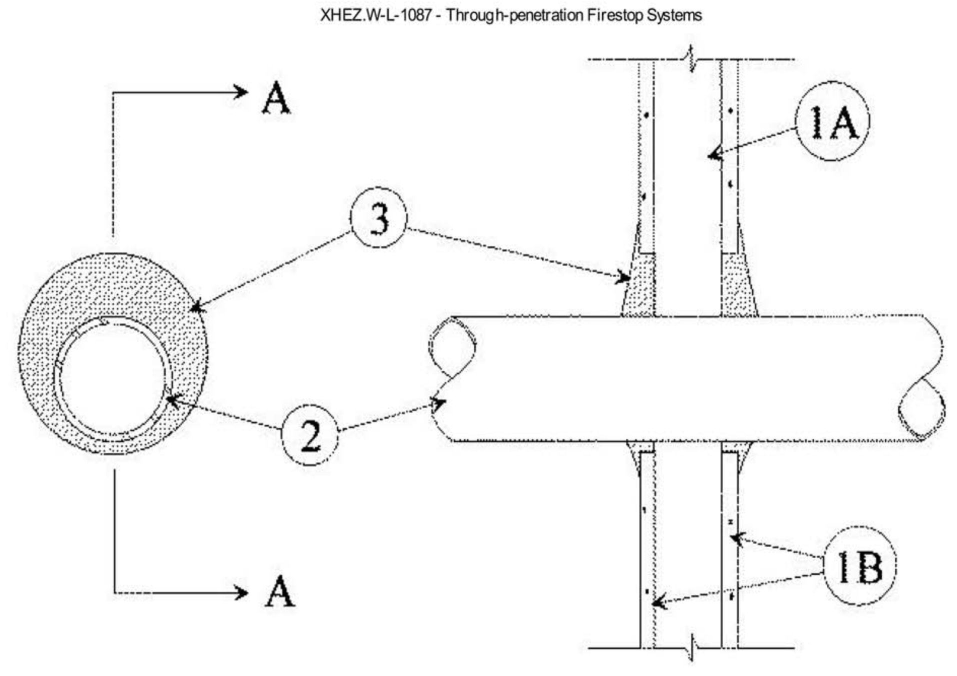

SECTION A-A

1. **Wall Assembly —** The fire rated gypsum wallboard/stud wall assembly shall be constructed of the materials and in the manner specified in the individual U300 or U400 Series Wall and Partition Designs in the UL Fire Resistance Directory and shall include the following construction features:

A. **Studs —** Wall framing may consist of either wood studs or steel channel studs. Wood studs to consist of nom 2 by 4 in. lumber spaced 16 in. OC. Steel studs to be a min 2-1/2 in. wide and spaced max 24 in. OC.

B. **Gypsum Board* —** The gypsum wallboard type, thickness (min 5/8 in.), number of layers, and orientation shall be as specified in the individual Wall and Partition Design. Max diam of opening is 7 in.

2. **Through-Penetrants —** One metallic pipe, conduit, or tubing to be installed either concentrically or eccentrically within the firestop system. Pipe, conduit, or tubing to be rigidly supported on both sides of wall assembly. The following types and sizes of metallic pipes, conduits or tubing may be used:

A. **Steel Pipe —** Nom 4 in. diam (or smaller) Schedule 10 (or heavier) steel pipe. The annular space shall be a min 1/4 in. to max 1-1/4 in. When steel pipe is used, T Rating is 0 hr.

B. **Conduit —** Nom 4 in. diam or smaller steel electrical metallic tubing or steel conduit. The annular space shall be a min 1/4 in. to max 1-1/4 in. When conduit is 1/2 in. diam or less, T Rating is 1 hr.

C. **Copper Tubing —** Nom 4 in. diam (or smaller) Type M (or heavier) copper tubing. The annular space shall be a min 1/4 in. to max 1-1/4 in. When copper tubing is used, T Rating is 0 hr.

3. **Fill, Void or Cavity Material* —** Min 5/8 in. thickness of fill material applied within the annulus flush with both surfaces of the wall. Additional fill material installed such that a min 3/8 in. crown is formed around the penetrating item, overlapping min 1 in. onto the wallboard surface. Dry mix material mixed at a rate of 2.1 parts dry mix to 1 part water by weight in accordance with the accompanying installation instructions.

UNITED STATES GYPSUM CO — Type FC

3A. **Fill, Void or Cavity Material* —** Not Shown — Two component fill material used as an alternate to Item 3. Min 5/8 in. thickness of fill material applied within the annulus flush with both surfaces of the wall. Additional fill material installed such that a min 3/8 in. crown is formed around the penetrating item, overlapping min 1 in. onto the wallboard surface. Ready-mixed component mixed with accelerator component at a rate of 66 parts of ready-mixed component to 1 part of accelerator component by weight in accordance with the accompanying installation instructions.

UNITED STATES GYPSUM CO — Type RFC

*Bearing the UL Classification Mark

ONLINE CERTIFICATIONS DIRECTORY

System No. W-L-1435
XHEZ.W-L-1435
Through-penetration Firestop Systems

Page Bottom

Design/System/Construction/Assembly Usage Disclaimer

- Authorities Having Jurisdiction should be consulted in all cases as to the particular requirements covering the installation and use of UL Certified products, equipment, system, devices, and materials.
- Authorities Having Jurisdiction should be consulted before construction.
- Fire resistance assemblies and products are developed by the design submitter and have been investigated by UL for compliance with applicable requirements. The published information cannot always address every construction nuance encountered in the field.
- When field issues arise, it is recommended the first contact for assistance be the technical service staff provided by the product manufacturer noted for the design. Users of fire resistance assemblies are advised to consult the general Guide Information for each product category and each group of assemblies. The Guide Information includes specifics concerning alternate materials and alternate methods of construction.
- Only products which bear UL's Mark are considered Certified.

XHEZ - Through-penetration Firestop Systems

See General Information for Through-penetration Firestop Systems

System No. W-L-1435

July 02, 2008

F Rating — 1 and 2 Hr (See Item 1B)

T Rating — 0 Hr

L Rating at Ambient - Less than 1 CFM/sq ft

L Rating at 400° F - Less than 1 CFM/sq ft

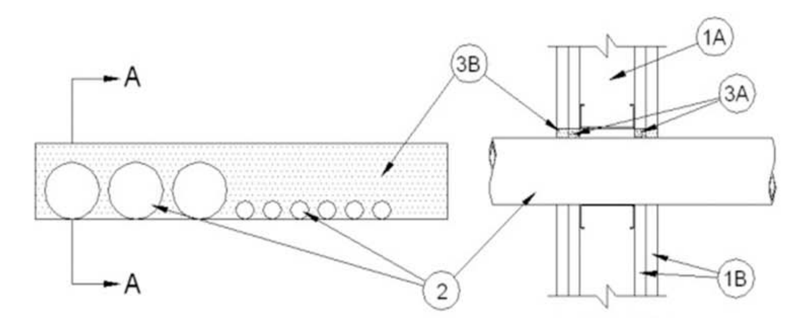

SECTION A-A

1. **Wall Assembly —** The 1 or 2 hr fire-rated gypsum wallboard/stud wall assembly shall be constructed of the materials and in the manner described in the individual U300, U400 or V400 Series Wall and Partition Design in the UL Fire Resistance Directory and shall include the following construction features:

A. **Studs —** Wall framing may consist of either wood studs or steel channel studs. Wood studs to consist of nom 2 by 4 in. (51 by 102 mm) lumber spaced 16 in. (406 mm) OC. Steel studs to be min 3-5/8 in. (92 mm) wide and spaced max 24 in. (610 mm) OC. Additional framing members to be installed in stud cavity containing the through penetrants to form a rectangular

box around the through penetrants.

B. **Gypsum Board* —** 8 in. (16 mm) thick, 4 ft (1.2 m) wide with square or tapered edges. The gypsum wallboard type, thickness, number of layers, fastener type and sheet orientation shall be as specified in the individual U300 or U400 Series Design in the UL Fire Resistance Directory. Max area of opening is 90-1/2 sq in. (584 cm^2) with max dimensions of 22-5/8 in. (575 mm) for steel stud walls. Max area of opening is 58 sq in. (374 cm^2) with max dimensions of 14-1/2 in. (368 mm) for wood stud walls.

The hourly F Rating of the firestop system is equal to the hourly fire rating of the wall assembly in which it is installed.

2. **Through Penetrants —** One or more through penetrants to be installed within the opening. Only three through penetrants shall have a nom diam greater than 1 in. (25 mm). The space between the through penetrants shall be a nom 1/2 in. (13 mm). The annular space between through penetrants and periphery of opening shall be min 0 in. (point contact) to max 1/2 in. (13 mm) for through penetrants having a nom diam greater than 1 in. (25 mm). The annular space between through penetrants and periphery of opening shall be min 0 in. (point contact) to max 2-7/8 in. (73 mm) for through penetrants having a nom diam 1 in. (25 mm) or less. The through penetrants to be rigidly supported on both sides of wall assembly. The following types and sizes of through penetrants may be used:

A. **Steel Pipe —** Nom 3 in. (76 mm) diam (or smaller) Schedule 10 (or heavier) steel pipe.

B. **Iron Pipe —** Nom 3 in. (76 mm) diam (or smaller) cast or ductile iron pipe.

C. **Conduit —** Nom 3 in. (76 mm) diam (or smaller) steel electrical metallic tubing or galv steel conduit.

3. **Firestop System —** The firestop system shall consist of the following:

A. **Forms —** (Optional) Used to prevent the leakage of fill material during installation in 2 hr fire-rated assemblies. Forms to be rigid sheet material or polyurethane backer rod, cut to fit the contour of the through penetrant and friction fitted into the opening on both sides of wall. Forms to be recessed from both surfaces of wall to accommodate the required thickness of fill material.

B. **Fill, Void or Cavity Material* — Sealant —** Min 5/8 in. (16 mm) thickness of fill material applied within annulus, flush with both surfaces of wall. At the point contact location between through penetrants and gypsum board, a min 3/8 in. (10 mm) diam bead of fill material shall be applied at the gypsum board/through penetrant interface on both surfaces of wall.

ACCUMETRIC L L C — Boss 816

*** Indicates such products shall bear the UL or cUL Certification Mark for jurisdictions employing the UL or cUL Certification (such as Canada), respectively.**

ONLINE CERTIFICATIONS DIRECTORY

System No. W-L-7044
XHEZ.W-L-7044
Through-penetration Firestop Systems

Page Bottom

Design/System/Construction/Assembly Usage Disclaimer

- Authorities Having Jurisdiction should be consulted in all cases as to the particular requirements covering the installation and use of UL Certified products, equipment, system, devices, and materials.
- Authorities Having Jurisdiction should be consulted before construction.
- Fire resistance assemblies and products are developed by the design submitter and have been investigated by UL for compliance with applicable requirements. The published information cannot always address every construction nuance encountered in the field.
- When field issues arise, it is recommended the first contact for assistance be the technical service staff provided by the product manufacturer noted for the design. Users of fire resistance assemblies are advised to consult the general Guide Information for each product category and each group of assemblies. The Guide Information includes specifics concerning alternate materials and alternate methods of construction.
- Only products which bear UL's Mark are considered Certified.

XHEZ - Through-penetration Firestop Systems

XHEZ7 - Through-penetration Firestop Systems Certified for Canada

See General Information for Through-penetration Firestop Systems

See General Information for Through-penetration Firestop Systems Certified for Canada

System No. W-L-7044

August 09, 2011

ANSI/UL1479 (ASTM E814)	CAN/ULC S115
F Ratings - 1 and 2 Hr (See Items 1, 2 and 3)	F Ratings - 1 and 2 Hr (See Items 1, 2 and 3)
T Ratings - 1 and 2 Hr (See Items 1, 2 and 3)	FT Ratings - 1 and 2 Hr (See Items 1, 2 and 3)
	FH Ratings - 1 and 2 Hr (See Items 1, 2 and 3)
	FTH Ratings - 1 and 2 Hr (See Items 1, 2 and 3)

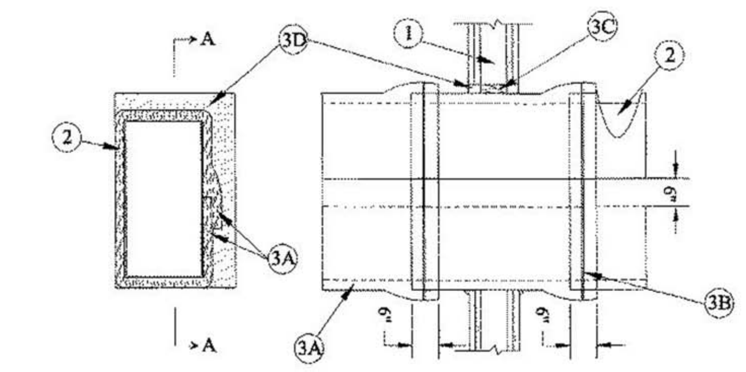

SECTION A-A

1. **Wall Assembly —** The 1 or 2 hr fire-rated gypsum board/stud wall assembly shall be constructed of the materials and in the manner specified in the individual U400, V400 or W400 Series Wall and Partition Designs in the Fire Resistance Directory and shall include the following construction features:

A. **Studs —** Wall framing shall consist 3-1/2 in. (89 mm) wide steel studs. Steel studs to be spaced max 24 in. (610 mm) OC. When the max dimension of opening exceeds the width of the stud cavity, the opening shall be framed on all sides . The framed opening shall be 5 in. (127 mm) wider and higher than the dimensions of the steel duct.

B. **Gypsum Board* —** For 1 hr assembly, one layer of min 5/8 in. (16 mm) thick gypsum board as required in the individual Wall and Partition Design. For 2 hr assembly, two layers of min 5/8 in. (16 mm) thick gypsum board as required in the individual Wall and Partition Design. Max area of opening is 7 ft2 (0.65 m^2) with a max dimension of 35 in. (889 mm).

The hourly F rating of the firestop system is equal to the hourly fire rating of the wall assembly in which it is installed.

2. **Through Penetrant —** One steel duct to be installed within annular space. Duct to be rigidly supported on both sides of wall assembly. The following types of through penetrants may be used:

A. **Steel Air Duct —** Min 24 gauge (0.023 in. or 0.58 mm) galv steel duct having a max perimeter dimension of 108 in. (2.74 m) and a max individual dimension of 30 in. (762 mm).

B. **Steel Grease Duct —** Min 16 gauge (0.059 in. or 1.5 mm) thick carbon steel duct having a max perimeter dimension of 108 in. (2.74 m) and a max individual dimension of 30 in. (889 mm). **Grease duct assemblies for use only in 2 hr rated walls.**

3. **Firestop System —** The firestop system shall consist of the following:

A. **Duct Wrap Materials* —** Nom 1-1/2 in. (38 mm) thick, 6 pcf (96 kg/m^3), ceramic blanket totally encapsulated within foil-scrim facers. The steel duct shall be wrapped with one layer of duct wrap, installed in accordance with the manufacturer's installation instructions, maintaining min 6 in. (152 mm) transverse and longitudinal overlaps. All cut edges and ends shall be sealed with 3 in. (76 mm) wide pressure sensitive aluminum foil tape. The annular space between the insulated duct and the periphery of the opening shall be min 0 in. (point contact) to max 2 in. (51 mm).

THERMAL CERAMICS INC — FireMaster FastWrap XL, Pyroscat Duct Wrap XL or FireMaster FastWrap+

B. **Steel Banding Straps —** Min 1/2 in. (13 mm) wide by 0.015 in. (0.38 mm) thick carbon steel banding straps used in conjunction with min 1 in. (25 mm) long stainless steel crimp clips. Banding straps spaced max 12 in. (305 mm) OC and 3 in. (76 mm) from transverse joints of duct wrap.

C. **Packing Material —** Min 3-1/2 in. (89 mm) thickness of unfaced scrap duct wrap material or min 4 pcf (64 kg/m^3) mineral wool batt insulation firmly packed into opening as a permanent form between the wrapped duct and the periphery of the opening. Packing material to be recessed from both surfaces of wall as required to accommodate the required thickness of fill material.

D. **Fill, Void or Cavity Material*— Sealant —** Min 5/8 in. (16 mm) and 1-1/4 in. (32 mm) thickness of fill material applied within annulus, flush with both surfaces of wall assembly for 1 or 2 hr rated walls, respectively. At the point contact location between duct and wallboard, a min 1/2 in. (13 mm) diam bead of sealant shall be applied at the wallboard/duct interface on both surfaces of wall assembly.

TREMCO INC — Fyre-Sil Sealant

*** Indicates such products shall bear the UL or cUL Certification Mark for jurisdictions employing the UL or cUL Certification (such as Canada), respectively.**

DFCM approval

SANDERS ASSOCIATES ARCHITECTS
2668 Grant Avenue
Ogden, UT 84401
P : 801.621.7303
www.sandersarch.com

Seal

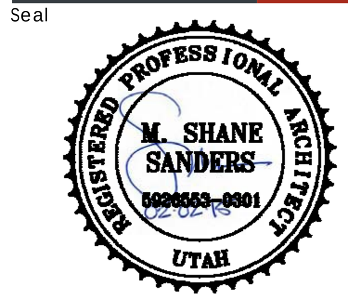

Consultant

Project Name

WSU- MILLER ADMINISTRATION
MEP Upgrades and Remodel

3848 HARRISON BLVD.
OGDEN, UTAH 84401

Issued

No.	Date	Description
1	01.16.15	DFCM PLAN REVIEW
2	02.03.15	BID DOCUMENTS

Revision #

No.	Date	Description

DFCM Project No. 14031810

SAA Project No. 214016

Drawing Title

UL FIRE-RATED PENETRATION FIRESTOP SYSTEMS

Sheet Number

AE662

ONLINE CERTIFICATIONS DIRECTORY

System No. C-AJ-1347
XHEZ.C-AJ-1347
Through-penetration Firestop Systems

Page Bottom

Design/System/Construction/Assembly Usage Disclaimer

- Authorities Having Jurisdiction should be consulted in all cases as to the particular requirements covering the installation and use of UL Listed or Classified products, equipment, system, devices, and materials.
- Authorities Having Jurisdiction should be consulted before construction.
- Fire resistance assemblies and products are developed by the design submitter and have been investigated by UL for compliance with applicable requirements. The published information cannot always address every construction nuance encountered in the field.
- When field issues arise, it is recommended the first contact for assistance be the technical service staff provided by the product manufacturer noted for the design. Users of fire resistance assemblies are advised to consult the general Guide Information for each product category and each group of assemblies. The Guide Information includes specifics concerning alternate materials and alternate methods of construction.
- Only products which bear UL's Mark are considered as Classified, Listed, or Recognized.

Through-penetration Firestop Systems

See General Information for Through-penetration Firestop Systems

System No. C-AJ-1347

October 04, 2000

F Rating — 2 Hr

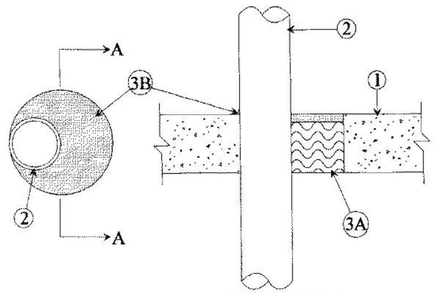

SECTION A-A

FIRESTOP CONFIGURATION A

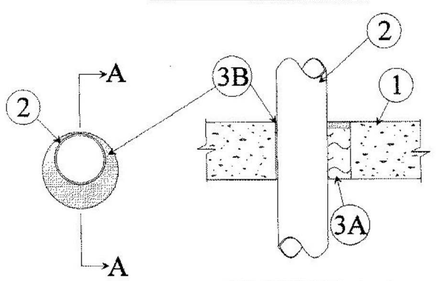

SECTION A-A

FIRESTOP CONFIGURATION B

Firestop Configuration

1. **Floor or Wall Assembly —** Min 4-1/2 in. thick reinforced lightweight or normal weight (100-150 pcf) concrete. Wall may also be constructed of any UL Classified **Concrete Blocks***. Max diam of opening is 14 in.

See **Concrete Blocks** (CAZT) category in the Fire Resistance Directory for names of manufacturers.

2. **Through Penetrants —** One metallic pipe, conduit or tubing to be installed either concentrically or eccentrically within the firestop system. Pipe, conduit or tubing to be rigidly supported on both sides of floor or wall assembly. The following types and sizes of metallic pipes, conduits or tubing may by used:

A. **Steel Pipe —** Nom 12 in. diam (or smaller) Schedule 40 (or heavier) steel pipe. The annular space shall be min 0 in. to max 7/8 in. for pipes 4 in. diam (or smaller). The annular space shall be min 1/4 in. to max 1 in. for pipes 12 in. diam (or smaller).

B. **Iron Pipe —** Nom 12 in. diam (or smaller) cast or ductile iron pipe. The annular space shall be min 0 in. to max 7/8 in. for pipes 4 in. diam (or smaller). The annular space shall be min 1/4 in. to max 1 in. for pipes 12 in. diam (or smaller).

C. **Conduit —** Nom 4 in. diam (or smaller) steel electrical metallic tubing or steel conduit. The annular space shall be min 0 in. to max 7/8 in.

D. **Copper Tubing —** Nom 4 in. diam (or smaller) Type L (or heavier) copper tubing. The annular space shall be min 0 in. to max 7/8 in.

E. **Copper Pipe —** Nom 4 in. diam (or smaller) Regular (or heavier) copper pipe. The annular space shall be min 0 in. to max 7/8 in.

3. **Firestop System —** The firestop system shall consist of the following:

A. **Packing Material —** Min 4 in. thickness of min 4.0 pcf mineral wool batt insulation firmly packed into opening as a permanent form. Packing material to be recessed from top surface of floor or from both surfaces of wall as required to accommodate the required thickness of fill material.

B. **Fill, Void or Cavity Material* — Caulk —** Min 1/2 in. thickness of fill material applied within the annulus, flush with top surface of floor or at both surfaces of wall. At the point contact location between pipe and concrete, a min 1/4 in. diam bead of fill material shall be applied at the concrete/pipe interface on the top surface of floor and on both surfaces of wall.

UNITED STATES GYPSUM CO — Type A

Configuration B

1. **Floor or Wall Assembly —** Min 3-1/2 in. thick reinforced lightweight or normal weight (100-150 pcf) concrete floor or min 4 in. thick reinforced lightweight or normal weight concrete wall. Wall may also be constructed of any UL Classified **Concrete Blocks***. Max diam of opening is 10-1/2 in.

See **Concrete Blocks** (CAZT) category in the Fire Resistance Directory for names of manufacturers.

2. **Through Penetrants —** One metallic pipe, conduit or tubing to be installed either concentrically or eccentrically within the firestop system. Pipe, conduit or tubing to be rigidly supported on both sides of floor or wall assembly. The following types and sizes of metallic pipes, conduits or tubing may be used:

A. **Steel Pipe —** Nom 8 in. diam (or smaller) Schedule 40 (or heavier) steel pipe. The annular space shall be min 1/4 in. to max 1-5/8 in.

B. **Iron Pipe —** Nom 8 in. diam (or smaller) cast or ductile iron pipe. The annular space shall be min 1/4 in. to max 1-5/8 in.

C. **Conduit —** Nom 4 in. diam (or smaller) steel electrical metallic tubing or steel conduit. The annular space shall be min 1/4 in. to max 1-5/8 in.

D. **Copper Tubing —** Nom 4 in. diam (or smaller) Type L (or heavier) copper tubing. The annular space shall be min 1/4 in. to max 1-5/8 in.

E. **Copper Pipe —** Nom 4 in. diam (or smaller) Regular (or heavier) copper pipe. the annular space shall be min 1/4 in. to max 1-5/8 in.

3. **Firestop System —** The firestop system shall consist of the following:

A. **Packing Material —** Min 3 in. thickness of min 6.0 pcf ceramic fiber blanket insulation firmly packed into opening as a permanent form. Packing material to be recessed from top surface of floor or from both surfaces of wall as required to accommodate the required thickness of fill material.

B. **Fill, Void or Cavity Material* — Caulk —** Min 1/2 in. thickness of fill material applied within the annulus, flush with top surface of floor or with both surfaces of wall.

UNITED STATES GYPSUM CO — Type A

*Bearing the UL Classification Mark

ONLINE CERTIFICATIONS DIRECTORY

System No. C-AJ-1092
XHEZ.C-AJ-1092
Through-penetration Firestop Systems

Page Bottom

Design/System/Construction/Assembly Usage Disclaimer

- Authorities Having Jurisdiction should be consulted in all cases as to the particular requirements covering the installation and use of UL Certified products, equipment, system, devices, and materials.
- Authorities Having Jurisdiction should be consulted before construction.
- Fire resistance assemblies and products are developed by the design submitter and have been investigated by UL for compliance with applicable requirements. The published information cannot always address every construction nuance encountered in the field.
- When field issues arise, it is recommended the first contact for assistance be the technical service staff provided by the product manufacturer noted for the design. Users of fire resistance assemblies are advised to consult the general Guide Information for each product category and each group of assemblies. The Guide Information includes specifics concerning alternate materials and alternate methods of construction.
- Only products which bear UL's Mark are considered Certified.

XHEZ - Through-penetration Firestop Systems

See General Information for Through-penetration Firestop Systems

System No. C-AJ-1092

September 03, 2004

F Rating — 2 Hr

T Rating — 0 Hr

L Rating At Ambient — 2 CFM/sq ft

L Rating At 400 F — less than 1 CFM/sq ft

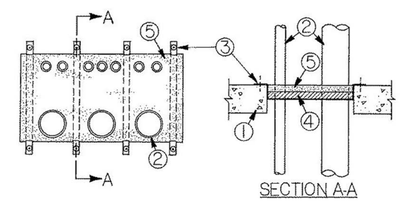

SECTION A-A

1. **Floor or Wall Assembly —** Min 2-1/2 in. thick lightweight or normal weight (100-150 pcf) concrete. When area of through opening exceeds 144 sq in., min concrete thickness is 4-1/2 in. Wall may also be constructed of any UL Classified **Concrete Blocks***. Max area of through opening not to exceed 560 sq in. with max width dimension of 14 in.

See **Concrete Blocks** (CAZT) category in the Fire Resistance Directory for names of manufacturers.

2. **Pipe or Conduit —** Nom 6 in. diam (or smaller) Schedule 10 (or heavier) steel pipe or steel conduit or nom 4 in. diam (or smaller) steel EMT or Type L (or heavier) copper tubing. Multiple pipes and/or conduits permitted in opening provided a min separation of 1/2 in. is maintained between pipes or conduits. Min annular space between pipes or conduits and edge of through opening is zero in. (point contact). Max annular space is 6 in. Pipes and conduits rigidly supported on both sides of floor or wall assembly.

3. **Support Hanger —** Min 1 in. wide strips of min 0.034 in. (20 gauge) galv steel sheet bent to form a "hat" -shape with each "brim" of the hat shape bearing 2 in. on the top surface of the floor and with the "crown" depth sufficient to accommodate the packing material (Item 4) and the required fill material (Item 5) thickness. Support hangers installed across width of opening and spaced max 8 in. O.C. When max dimension of opening is 12 in. and when max annular space is 2-3/4 in., no support hangers are required. Ends of support hangers anchored to top surface of floor with steel anchor bolts, or equivalent, in conjunction with steel fender washers. Support hangers not required in wall assemblies.

4. **Packing Material —** Min 1 in. thickness of mineral wool batt insulation firmly packed into opening as a permanent form. In floors, packing material to be installed atop support hangers (when required) with top surface recessed min 1 in. from top surface of floor. In walls, packing material to be recessed min 1 in. from both surfaces of wall.

5. **Fill, Void or Cavity Material* — Caulk, Sealant —** Applied to fill the annular space to a min depth of 1 in. on top surface of floor or on both sides of wall.

3M COMPANY — CP 25WB+, or FB-3000 WT.

*** Indicates such products shall bear the UL or cUL Certification Mark for jurisdictions employing the UL or cUL Certification (such as Canada), respectively.**

ONLINE CERTIFICATIONS DIRECTORY

System No. C-AJ-7135
XHEZ.C-AJ-7135
Through-penetration Firestop Systems

Page Bottom

Design/System/Construction/Assembly Usage Disclaimer

- Authorities Having Jurisdiction should be consulted in all cases as to the particular requirements covering the installation and use of UL Certified products, equipment, system, devices, and materials.
- Authorities Having Jurisdiction should be consulted before construction.
- Fire resistance assemblies and products are developed by the design submitter and have been investigated by UL for compliance with applicable requirements. The published information cannot always address every construction nuance encountered in the field.
- When field issues arise, it is recommended the first contact for assistance be the technical service staff provided by the product manufacturer noted for the design. Users of fire resistance assemblies are advised to consult the general Guide Information for each product category and each group of assemblies. The Guide Information includes specifics concerning alternate materials and alternate methods of construction.
- Only products which bear UL's Mark are considered Certified.

XHEZ - Through-penetration Firestop Systems

See General Information for Through-penetration Firestop Systems

System No. C-AJ-7135

July 07, 2008

F Rating — 2 Hr

T Rating — 0 Hr

L Rating at Ambient — Less than 1 CFM/sq ft

L Rating at 400° F — Less than 1 CFM/sq ft

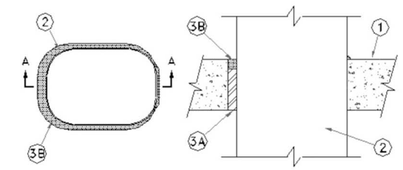

SECTION 'A-A'

1. **Floor or Wall Assembly —** Min 4-1/2 in. (114 mm) thick reinforced light weight or normal weight (100-150 pcf or 1600-2400 kg/m^3) concrete floor or min 5 in. (127 mm) thick light weight or normal weight concrete wall. Wall may also be constructed of any UL Classified **Concrete Blocks***. Max area of opening is 715 sq in. (4613 cm^2) with max dimension of 37-1/4 in. (946 mm).

See **Concrete Blocks** (CAZT) category in the Fire Resistance Directory for names of manufacturers.

2. **Steel Duct —** Nom 36 by 20 in. (915 by 508 mm) (or smaller) by No. 24 gauge (or heavier) galv steel, oval HVAC duct. One steel duct to be positioned within the firestop system. The annular space shall be min 0 in. (point of contact) to max 2 in. (51 mm). Duct to be rigidly supported along its entire perimeter 8 in. (203 mm) from both surfaces of floor or wall assembly.

3. **Firestop System —** The firestop system shall consist of the following:

A. **Packing Material —** Min 4 in. thickness of min 4 pcf (64 kg/m^3) mineral wool batt insulation firmly packed into opening as a permanent form between the bare steel duct and the periphery of the opening. Packing material to be recessed from top surface of floor or from both surfaces of wall to accommodate the required thickness of fill material.

B. **Fill, Void, or Cavity Materials* - Sealant —** Min 1/2 in. (13 mm) thickness of fill material applied within the annulus over the mineral wool insulation, flush with top surface of floor or both surfaces of wall. A 3/8 in. (10 mm) diam bead of the sealant shall be applied along the point of contact of the duct and periphery of the opening at top surface of floor or both surfaces of wall.

ACCUMETRIC L L C — Boss 816

*** Indicates such products shall bear the UL or cUL Certification Mark for jurisdictions employing the UL or cUL Certification (such as Canada), respectively.**

DFCM approval

SANDERS ASSOCIATES ARCHITECTS
2668 Grant Avenue
Ogden, UT 84401
801 621 7303
www.sandersarch.com

Seal

REGISTERED PROFESSIONAL ARCHITECT
M. SHANE SANDERS
5526503-0301
UTAH

Consultant

Project Name

WSU- MILLER ADMINISTRATION
MEP Upgrades and Remodel
3848 HARRISON BLVD.
OGDEN, UTAH 84401

Issued

No.	Date	Description
1	01.16.15	DFCM PLAN REVIEW
2	02.03.15	BID DOCUMENTS

Revision

No.	Date	Description

DFCM Project No. 14031810

SAA Project No. 214016

Drawing Title

UL FIRE-RATED PENETRATION FIRESTOP SYSTEMS

Sheet Number

AE663

SIGNAGE SCHEDULE

#	NAME	TEXT SIZE	TEXT	BRAILLE TEXT	BRAILLE SIZE	SIGN TYPE	OVERALL DIMENSIONS	TEXT & SIGN COLOR	MOUNTING	COMMENTS
101	RECEPTION	MATCH EXISTING	101, RECEPTION, AFFIRMATIVE ACTION/EQUAL OPPORTUNITY	101	MATCH EXISTING	MATCH EXISTING	MATCH EXISTING	MATCH EXISTING	WALL	
211	CORRIDOR	MATCH EXISTING	211, WEB DEVELOPMENT, INFORMATION SYSTEMS & SERVICES	211	MATCH EXISTING	MATCH EXISTING	MATCH EXISTING	MATCH EXISTING	WALL	
211K	CONFERENCE	MATCH EXISTING	211K, CONFERENCE	211K	MATCH EXISTING	MATCH EXISTING	MATCH EXISTING	MATCH EXISTING	WALL	
214	RECEPTION	MATCH EXISTING	214, RECEPTION, INTERNAL AUDIT	214	MATCH EXISTING	MATCH EXISTING	MATCH EXISTING	MATCH EXISTING	WALL	
304	RECEPTION	MATCH EXISTING	304, RECEPTION, STUDENT AFFAIRS	304	MATCH EXISTING	MATCH EXISTING	MATCH EXISTING	MATCH EXISTING	WALL	
306	RECEPTION	MATCH EXISTING	306, RECEPTION, ACADEMIC AFFAIRS	306	MATCH EXISTING	MATCH EXISTING	MATCH EXISTING	MATCH EXISTING	WALL	
307	RECEPTION	MATCH EXISTING	307, RECEPTION, UNIVERSITY LEGAL COUNSEL	307	MATCH EXISTING	MATCH EXISTING	MATCH EXISTING	MATCH EXISTING	WALL	
313	RECEPTION	MATCH EXISTING	313, RECEPTION, INFORMATION TECHNOLOGY DIVISION	313	MATCH EXISTING	MATCH EXISTING	MATCH EXISTING	MATCH EXISTING	WALL	
316	RECEPTION	MATCH EXISTING	316, RECEPTION, INFORMATION SYSTEMS & SERVICES DATA ADMINISTRATION	316	MATCH EXISTING	MATCH EXISTING	MATCH EXISTING	MATCH EXISTING	WALL	

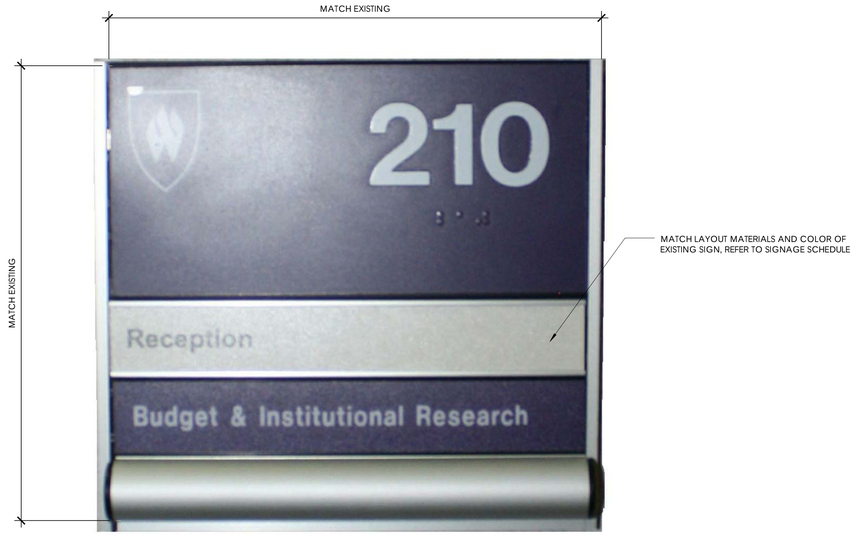

PHOTO OF EXISTING SIGN FOR MATCHING EXISTING

FIRE EXTINGUISHER

7/8" BLACK LETTERS

LEVEL 2 - FIRE CABINET DECAL 1

7/8" BLACK LETTERS

FIRE EXTINGUISHER

LEVEL 3 - FIRE CABINET DECAL 2

SANDERS ASSOCIATES ARCHITECTS
2668 Grant Avenue
Ogden, UT 84401
T 801.621.7303
www.sandersarch.com

Seal

REGISTERED PROFESSIONAL ARCHITECT
M. SHANE SANDERS
5294553-0301
UTAH

Consultant

Project Name

WSU- MILLER ADMINISTRATION
MEP Upgrades and Remodel
3848 HARRISON BLVD.
OGDEN, UTAH 84401

Issued

No.	Date	Description
1	01.16.15	DFCM PLAN REVIEW
2	02.03.15	BID DOCUMENTS

Revision

No.	Date	Description

DFCM Project No. 14031810

SAA Project No. 214016

Drawing Title

SIGNS

Sheet Number

AE700

DFCM approval

MECHANICAL LEGEND

SYMBOL	ABR,	DESCRIPTION
GENERAL TERMINOLOGY		
A		SECTION LETTER DESIGNATION
ME101		SECTION DRAWN ON THIS SHEET
A2		DETAIL NUMBER DESIGNATION CORRESPONDING WITH GRID LOCATION
AH		MECHANICAL EQUIPMENT DESIGNATION
1		EQUIPMENT ITEM DESIGNATION
D-1 / CFM		REGISTER, GRILLE OR DIFFUSER DESIGNATION WITH BALANCING CFM LISTED BELOW
R-1		GRILLE OR LOUVER DESIGNATION WHERE BALANCING NOT REQUIRED
1		REVISION DESIGNATOR AND NUMBER
1		KEY NOTE DESIGNATOR AND NUMBER
	POC	POINT OF CONNECTION
	POR	POINT OF REMOVAL
AFF		ABOVE FINISHED FLOOR
AP		ACCESS PANEL
C EL.		CENTERLINE ELEVATION
GC		GENERAL CONTRACTOR
MC		MECHANICAL CONTRACTOR
ATC		CONTROLS CONTRACTOR
EC		ELECTRICAL CONTRACTOR
FPC		FIRE PROTECTION CONTRACTOR
NIC		NOT IN CONTRACT
NTS		NOT TO SCALE
VCP		VITRIFIED CLAY PIPE
C		COMMON
NC		NORMALLY CLOSED
NO		NORMALLY OPEN

SYMBOL	ABR,	DESCRIPTION
AIR SIDE		
		EXISTING AIR DUCT TO BE REMOVED
		EXISTING AIR DUCT TO REMAIN
		NEW AIR DUCT
		RECT TO RECT AIR DUCT TAKE-OFF
		RECT TO RND AIR DUCT TAKE-OFF
		RND TO RND AIR DUCT TAKE-OFF
		MEDIUM PRESSURE TAKE-OFF
		FLEXIBLE AIR DUCT
		LINED DUCT
		RADIUS ELBOW
		ECCENTRIC DUCT TRANSITION
		CONCENTRIC DUCT TRANSITION
		VOLUME DAMPER
		SUPPLY AIR DIFFUSER
		RETURN & TRANSFER AIR GRILLE
		EXHAUST GRILLE OR CEILING EXH. FAN
		RETURN & OUTSIDE AIR DUCT UP/DN
		RETURN & OA ROUND DUCT UP/DN
		SUPPLY AIR DUCT UP/DN
		SUPPLY AIR ROUND DUCT UP/DN
		EXHAUST AIR DUCT UP/DN
		EXHAUST AIR ROUND DUCT UP/DN
	AP	ACCESS PANEL
		EXISTING EQUIPMENT TO BE REMOVED
		EXISTING EQUIPMENT TO REMAIN
		NEW EQUIPMENT
SA		SUPPLY AIR
RA		RETURN AIR
EA		EXHAUST AIR
OA		OUTSIDE AIR
MA		MIXED AIR
RF		RELIEF AIR
FO		FLAT OVAL
M	MVD	MOTORIZED VOLUME DAMPER
BD	BD	BACKDRAFT DAMPER
F	FD	FIRE DAMPER
S	SD	SMOKE DAMPER
FS	FS	FIRE & SMOKE DAMPER
T	T-STAT	WALL MOUNTED THERMOSTAT
S		WALL MOUNTED TEMP. SENSOR
H	H-STAT	WALL MOUNTED HUMIDISTAT
F	F-STAT	WALL MOUNTED FIRESTAT

SYMBOL	ABR,	DESCRIPTION
WET SIDE		
		PUMP
R		REGULATOR
		UNION
		MANUAL ACTUATOR
		PNUEMATIC DIAPHRAM ACTUATOR
M		ELECTRIC MOTOR ACTUATOR
S		SOLENOID ACTUATOR
		BUTTERFLY VALVE
		GATE VALVE
		GLOBE VALVE - STRAIGHT PATTERN
		GLOBE VALVE - ANGLE PATTERN
M		MOTORIZED 2-WAY CONTROL VALVE
M		MOTORIZED 3-WAY CONTROL VALVE
	PRV	PRESSURE REDUCING VALVE
		CHECK VALVE
		CIRCUIT BALANCING VALVE
		BALL VALVE
P		PRESSURE RELIEF VALVE
T		THERMAL RELIEF VALVE
S		SAFETY RELIEF VALVE
		PLUG VALVE
		NEEDLE VALVE
		TRIPLE DUTY VALVE
		AUTOMATIC AIR VENT
		MANUAL AIR VENT
		STRAINER
		STRAINER W/ PLUG BLOW OFF
		VENTURI
		PRESSURE GUAGE W/ COCK - WATER
		PRESSURE GUAGE W/ COCK - STEAM
		THERMOMETER & THERMOWELL
S		WATER TEMP SENSOR & THERMOWELL
F		FLOW SWITCH
PS		PRESSURE SWITCH
		THERMOWELL
		PRESSURE & TEMP TAP
T IBT		INVERTED BUCKET STEAM TRAP
TT		THERMOSTATIC STEAM TRAP
F&T		FLOAT & THERMOSTATIC STEAM TRAP
		DIRECTION OF FLOW
		BACKFLOW PREVENTING VALVE

SYMBOL	ABR,	DESCRIPTION
WET SIDE		
		PITCH DOWN
		ELBOW UP/DN
		TEE UP/DN
		EXISTING PIPING TO BE REMOVED
		EXISTING PIPING TO REMAIN
		NEW PIPING
		PIPE CAP OR PLUG
		REDUCER - CONCENTRIC / ECCENTRIC
		EXPANSION JOINT
		FLEXIBLE CONNECTION
		ANCHOR POINT
	CD	CONDENSATE DRAIN
	G	NATURAL GAS PIPING
	CF	CHEMICAL FEED LINE
	GF	GLYCOL FILL LINE
	MU	MAKE-UP WATER LINE
	CW	CULINARY COLD WATER
	HW	CULINARY HOT WATER
	HWREC	CULINARY HOT WATER RECIRC
	CWS	CONDENSER WATER SUPPLY
	CWS	CONDENSER WATER RETURN
	CHWS	CHILLED WATER SUPPLY
	CHWR	CHILLED WATER RETURN
	L	REFRIGERANT LIQUID
	S	REFRIGERANT SUCTION
	HG	REFRIGERANT HOT GAS

GENERAL NOTES

G-1 - MECHANICAL INFORMATION IS NOT LIMITED TO THE MECHANICAL DRAWINGS. CONTRACTOR SHALL BE RESPONSIBLE FOR INFORMATION OF THE EXISTING BUILDING AND SITE CONDITIONS, EXISTING PIPING, EXISTING ELECTRICAL, AND EXISTING SUPPORTS.

A - EACH DRAWING SHEET AND THE SPECIFICATIONS HAVE BEEN PREPARED TO SUPPLEMENT EACH OTHER AND THEY SHALL BE INTERPRETED AS AN INTEGRAL UNIT WITH ITEMS SHOWN AND NOTED ON ONE AND NOT THE OTHER BEING FURNISHED AND INSTALLED AS THOUGH SHOWN AND CALLED OUT IN ALL PLACES. ITEMS IN SPECIFICATIONS OR DRAWINGS LISTED WHICH ARE DIFFERING IN EFFICIENCY OR QUALITY SHALL BE HELD TO THE GREATEST OF: EFFICIENCY, QUALITY OR GOVERNING CODE.

B - THE CONTRACTOR WILL BE HELD RESPONSIBLE FOR THE INSTALLATION OF THE SYSTEMS ACCORDING TO THE TRUE INTENT AND MEANING OF THE CONTRACT DOCUMENTS.

C - THE CONTRACTOR SHALL INSTALL ALL EQUIPMENT WITH PROPER SERVICE ACCESS AND CLEARANCES ACCORDING TO MANUFACTURERS RECOMMENDATIONS. THE CONTRACTOR SHALL REVIEW SUPPLIERS BID PACKAGES FOR COMPLETENESS AND COMPLIANCE TO THE SPECIFICATIONS, SCHEDULES, AND DESIGN INTENT (ALL EQUIPMENT AND METHODS). THE CONTRACTOR SHALL REMOVE AND REINSTALL CORRECTLY AT HIS OWN EXPENSE ANY EQUIPMENT NOT IN COMPLIANCE.

D - THE CONTRACTOR SHALL CONSULT MANUFACTURERS INSTALLATION INSTRUCTIONS FOR SIZES, METHODS, ACCESSORIES, AND CLEARANCES IN SPACE AVAILABLE PRIOR TO BIDDING PROJECT.

E - ANYTHING NOT CLEAR OR IN CONFLICT WILL BE EXPLAINED BY MAKING APPLICATION TO THE ENGINEER IN WRITING.

G-2 - ANY AND ALL ALTERATIONS TO THE SYSTEM SHOWN SHALL BE SUBMITTED TO THE ENGINEER PRIOR TO CHANGES FOR APPROVAL. CONTRACTOR SHALL NOT START ANY CHANGES UNTIL NOTIFIED IN WRITING. IF CHANGES ARE MADE PRIOR TO APPROVAL CONTRACTOR SHALL TAKE ALL RESPONSIBILITY FOR THE CHANGES MADE AND ALL COSTS RELATING TO FAILURE OR REPLACEMENT OF ALTERATIONS.

G-3 - CONTRACTOR SHALL FIELD VERIFY ALL DIMENSIONS AND LOCATIONS.

G-4 - THE WORKING DRAWINGS ARE DIAGRAMMATIC. THEY DO NOT SHOW EVERY OFFSET, BEND, OR ELBOW NECESSARY FOR THE COMPLETE INSTALLATION IN THE SPACE PROVIDED. ALL LOCATIONS FOR MECHANICAL EQUIPMENT SHALL BE FIELD VERIFIED AND COORDINATED WITH ALL DRAWINGS. THE CONTRACTOR SHALL PROVIDE OR COORDINATE WITH THE GENERAL CONTRACTOR PROVISIONS FOR BLOCKOUTS OR CORE DRILLS THROUGH STRUCTURE.

G-5 - THE INSTRUCTION TO "PROVIDE" ALSO INCLUDES INSTALLATION.

G-6 - MECHANICAL CONTRACTOR SHALL PROVIDE AND INSTALL SMOKE AND FIRE DAMPERS AS REQUIRED BY LOCAL CODES AND AUTHORITIES.

G-7 - SHEET METAL DUCT SIZES SHOWN ON DRAWINGS ARE FREE AREA DIMENSIONS.

G-8 - PROVIDE AND INSTALL BALANCING DAMPERS IN ALL SUPPLY AND EXHAUST AIR BRANCH DUCTS. BALANCE TO CFM SHOWN ON PLAN.

G-9 - SEE ARCHITECTURAL REFLECTED CEILING PLAN FOR EXACT LOCATION OF DIFFUSERS AND GRILLES.

G-10 - PROVIDE TURNING VANES IN ALL ELBOWS OF RECTANGULAR DUCT.

G-11 - THE CONTRACTOR SHALL ASSUME ALL RESPONSIBILITY IN HANDLING AND DISPOSING OF REFRIGERANTS, OILS, ETC. ALL SUCH MATERIALS SHALL BE HANDLED, DISPOSED, AND USED IN ACCORDANCE WITH ALL LOCAL, STATE, AND FEDERAL LAWS.

G-12 - THE MECHANICAL CONTRACTOR SHALL VERIFY MOTOR VOLTAGES WITH THE ELECTRICAL DRAWING BEFORE ORDERING MOTORIZED EQUIPMENT AND CONTROLS.

G-13 - C.F.M. LISTED IS ACTUAL AIR.

G-14 - SUPPLIERS SHALL REVIEW ALL DRAWINGS AND THE SPECIFICATIONS PRIOR TO SUBMITTING PRICES TO THE CONTRACTOR. ALL QUESTIONS AND DISCREPANCIES SHALL BE BROUGHT TO THE ENGINEERS ATTENTION PRIOR TO BIDDING.

G-15 - CONTRACTOR SHALL THOROUGHLY REVIEW AND SIGN SUBMITTALS FOR COMPLETENESS AND COMPLIANCE TO THE SPECIFICATIONS PRIOR TO ENGINEERS REVIEW. SUPPLIERS SHALL HIGHLIGHT OR MARK ALL INFORMATION REQUIRED TO SHOW COMPLIANCE TO THE SPECIFICATIONS. ALL REQUESTED EXCEPTIONS TO THE SPECIFICATIONS, OR SCHEDULES SHALL BE CLEARLY NOTED AND EXPLAINED. SUBMITTAL REVIEW AND ACCEPTANCE IS FOR DESIGN CONCEPT ONLY, AND DOES NOT AT ANY TIME RELIEVE THE CONTRACTOR OF RESPONSIBILITY TO MEET SPECIFICATIONS, CAPACITIES, OR DESIGN INTENT.

G-16 - ALL MECHANICAL SHALL BE INSTALLED AND CONFORM TO THE 2012 EDITION OF THE IMC AND IPC WITH UTAH ANNOTATIONS AND LOCAL AUTHORITY REQUIREMENTS.

G-17 - THIS CONTRACTOR SHALL BE RESPONSIBLE FOR THE DRAINING DOWN AND RE-FILLING OF ALL SYSTEMS NECESSARY TO COMPLETE THE WORK OUTLINED BY THIS PROJECT. THIS INCLUDES PROVIDING THE REQUIRED CHEMICAL TREATMENT WHEN RE-FILLING THE SYSTEM.

G-18 - ALL PIPING, MATERIALS, ETC. SHALL BE NEW AND DOMESTIC MADE UNLESS SPECIFICALLY AUTHORIZED IN WRITING PRIOR TO BID.

DFCM approval

SANDERS ASSOCIATES ARCHITECTS
2668 Grant Avenue
Ogden, UT 84401
P : 801.621.7303
www.sandersarch.com

Seal

PROFESSIONAL ENGINEER 01.16.15 WINWARD M. PACKER No. 375080 STATE OF UTAH

Consultant

Project Name

WSU- MILLER ADMINISTRATION
MEP Upgrades and Remodel
3848 HARRISON BLVD.
OGDEN, UTAH 84401

Issued

No.	Date	Description
1	01.16.15	DFCM PLAN REVIEW
2	02.03.15	BID SET

Revision

No.	Date	Description

DFCM Project No. 14031810
SAA Project No. 214016

Drawing Title

MECHANICAL LEGEND AND GENERAL NOTES

Sheet Number

MG001

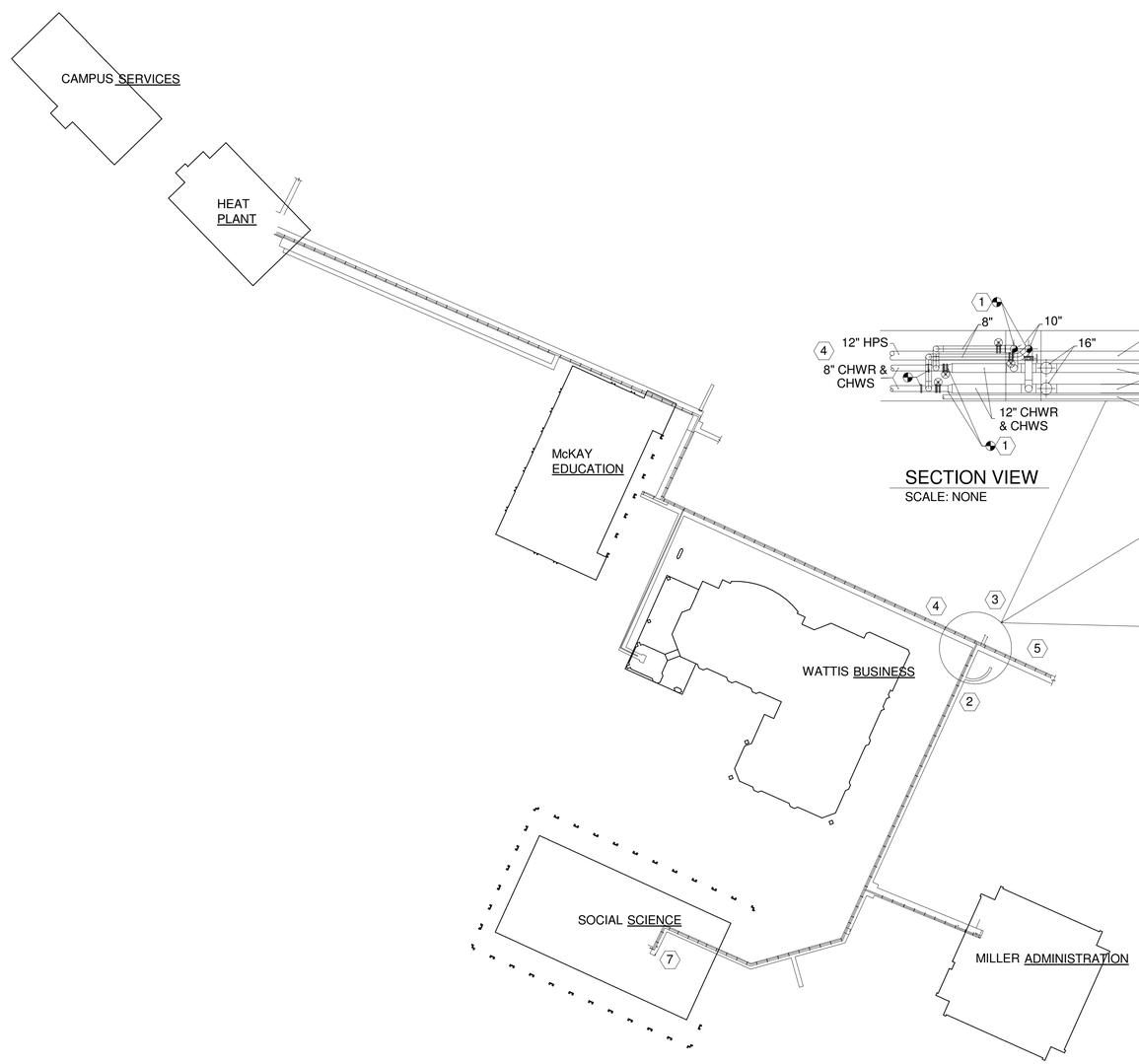

PARTIAL CAMPUS PLAN

SCALE: NONE

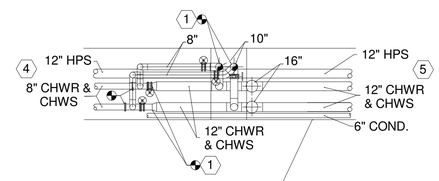

SECTION VIEW

SCALE: NONE

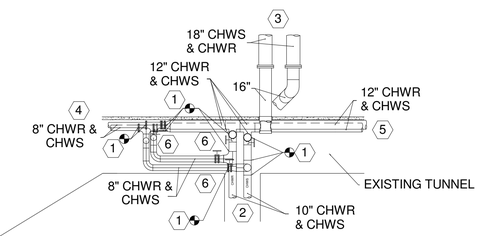

PLAN VIEW

SCALE: NONE

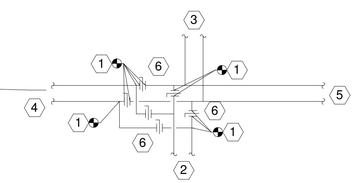

SCHEMATIC

SCALE: NONE

SHEET NOTES:

1. TIE INTO THE EXISTING CHILLED WATER SUPPLY AND RETURN IN THIS APPROXIMATE LOCATION IN THE TUNNEL. FIELD VERIFY.
2. EXISTING CHILLED WATER TO MILLER ADMIN AND SOCIAL SCIENCE SHALL REMAIN.
3. EXISTING BURIED CHILLED WATER FROM CENTRAL PLANT SHALL REMAIN.
4. EXISTING CHILLED WATER TO SOUTH WEST SIDE OF CAMPUS SHALL REMAIN.
5. EXISTING CHILLED WATER TO EAST SIDE OF CAMPUS SHALL REMAIN.
6. PROVIDE BUTTERFLY VALVE ON BOTH CHILLED WATER SUPPLY AND RETURN. FIELD VERIFY.
7. BASE BID: WSU WILL USE PUMPS IN SOCIAL SCIENCE BUILDING TO CIRCULATE LOWER SUB LOOP IF NEEDED.

GENERAL NOTES:

1. THE INTENT IS TO PROVIDE A BYPASS WITH 3 SETS OF SHUTOFF VALVES SO THE LOWER SECTION OF CAMPUS CAN BE ISOLATED FROM THE CENTRAL PLANT.

SANDERS ASSOCIATES ARCHITECTS
2668 Grant Avenue
Ogden, UT 84401
P.: 801.621.7303
www.sandersarch.com

Seal

PROFESSIONAL ENGINEER
01.16.15
WINWARD M. PACKER
No. 375080
STATE OF UTAH

Consultant

Project Name

WSU- MILLER ADMINISTRATION

MEP Upgrades and Remodel

3848 HARRISON BLVD.
OGDEN, UTAH 84401

Issued

No.	Date	Description
1	01.16.15	DFCM PLAN REVIEW
2	02.03.15	BID SET

Revision

No.	Date	Description

DFCM Project No. 14031810

SAA Project No. 214016

Drawing Title

MECHANICAL SITE PLAN

Sheet Number

MS101

DFCM approval

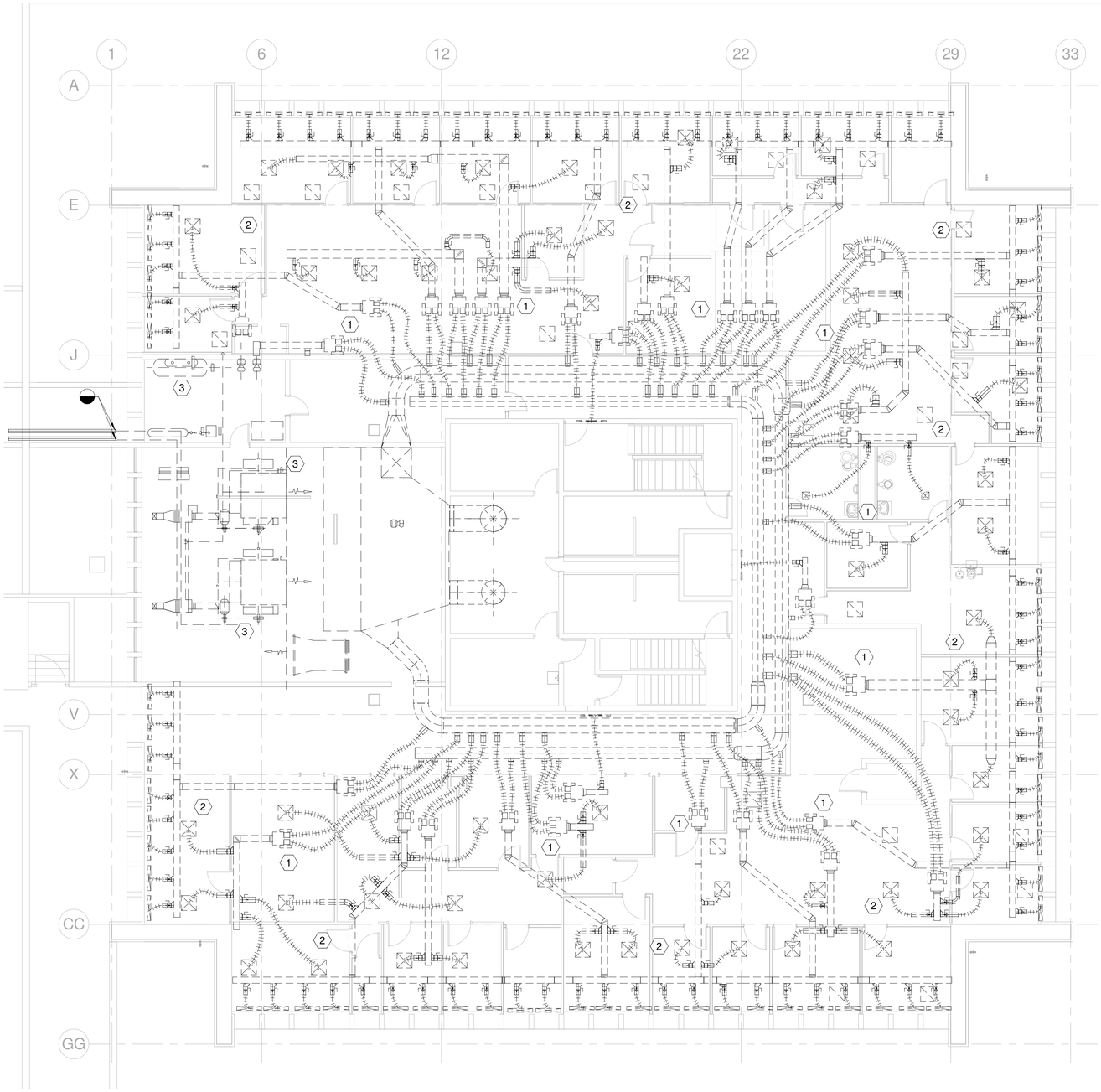

MECHANICAL LEVEL 1 DEMO PLAN

1 — 1/8" = 1'-0"

SHEET NOTES

1. REMOVE EXISTING DUAL DUCT BOXES AND ALL ASSOCIATED ITEMS IN THIS APPROXIMATE LOCATION. FIELD VERIFY.
2. REMOVE EXISTING DUCTWORK, DIFFUSERS, AND GRILLES AS SHOWN. FIELD VERIFY.
3. REMOVE EXISTING EQUIPMENT IN THE MECHANICAL ROOM. FIELD VERIFY.

GENERAL NOTES:

1. REMOVE EXISTING DUCTWORK AND EQUIPMENT AS SHOWN. THE INTENT IS TO REMOVE THE EXISTING DUAL DUCT SYSTEM AND EQUIPMENT AND REPLACE IT WITH A WATER SOURCE VRF SYSTEM.

SANDERS ASSOCIATES ARCHITECTS
2668 Grant Avenue
Ogden, UT 84401
P.: 801.621.7303
www.sandersarch.com

Seal

PROFESSIONAL ENGINEER 01.16.15 WINWARD M. PACKER No. 375080 STATE OF UTAH

Consultant

Project Name

WSU- MILLER ADMINISTRATION

MEP Upgrades and Remodel

3848 HARRISON BLVD.
OGDEN, UTAH 84401

Issued

No.	Date	Description
1	01.16.15	DFCM PLAN REVIEW
2	02.03.15	BID SET

Revision

No.	Date	Description

DFCM Project No. 14031810

SAA Project No. 214016

Drawing Title

MECHANICAL LEVEL 1 DEMO PLAN

Sheet Number

MD101

DFCM approval

SHEET NOTES

1. REMOVE EXISTING DUAL DUCT BOXES AND ALL ASSOCIATED ITEMS IN THIS APPROXIMATE LOCATION. FIELD VERIFY.
2. REMOVE EXISTING DUCTWORK, DIFFUSERS, AND GRILLES AS SHOWN. FIELD VERIFY.

GENERAL NOTES:

1. REMOVE EXISTING DUCTWORK AND EQUIPMENT AS SHOWN. THE INTENT IS TO REMOVE THE EXISTING DUAL DUCT SYSTEM AND EQUIPMENT AND REPLACE IT WITH A WATER SOURCE VRF SYSTEM.

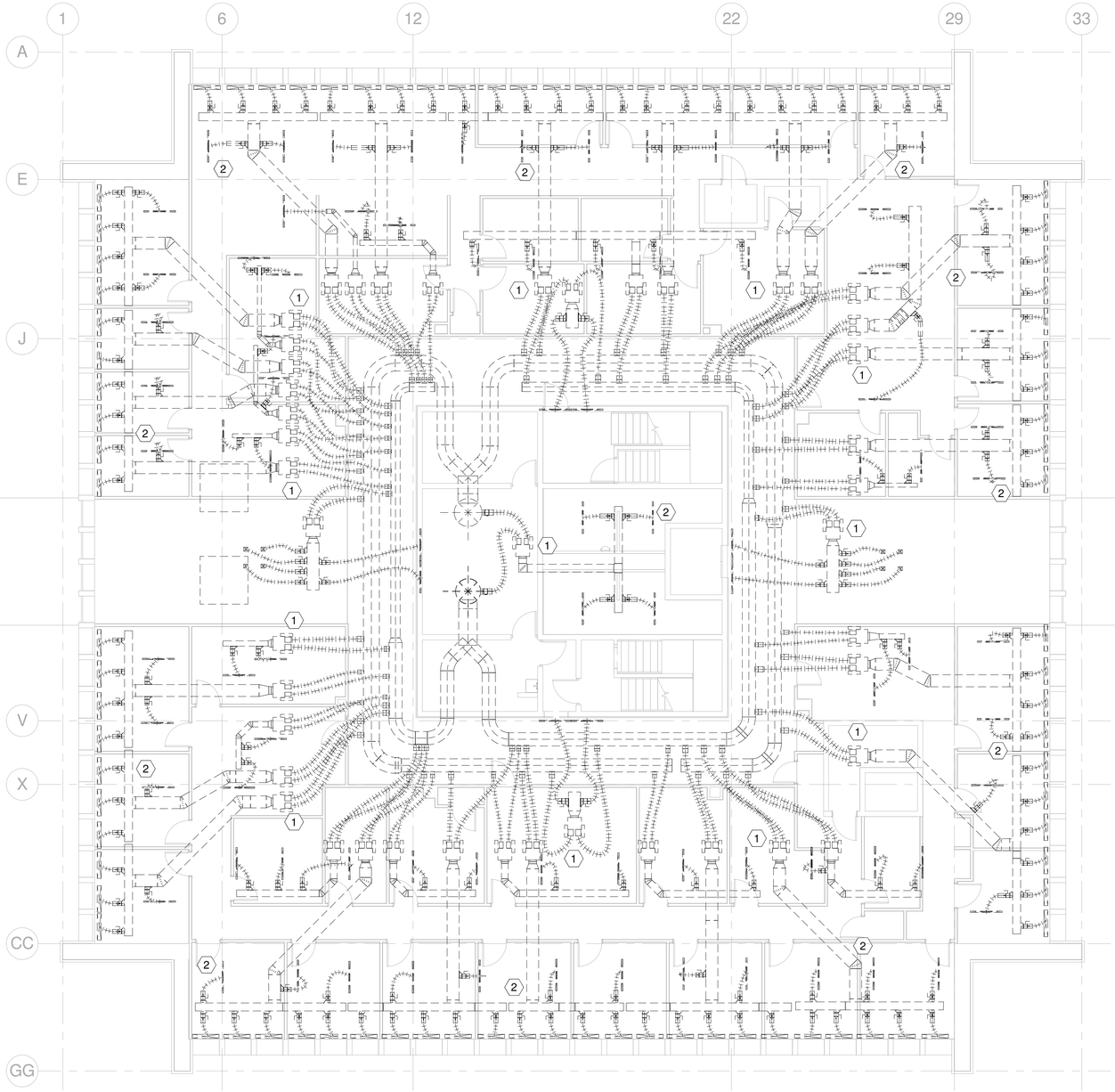

1 MECHANICAL LEVEL 2 DEMO PLAN

1/8" = 1'-0"

DFCM approval

SANDERS ASSOCIATES ARCHITECTS
2668 Grant Avenue
Ogden, UT 84401
P.: 801.621.7303
www.sandersarch.com

Seal

PROFESSIONAL ENGINEER 01.16.15 WINWARD M. PACKER No. 375080 STATE OF UTAH

Consultant

Project Name

WSU- MILLER ADMINISTRATION

MEP Upgrades and Remodel

3848 HARRISON BLVD.
OGDEN, UTAH 84401

Issued

No.	Date	Description
1	01.16.15	DFCM PLAN REVIEW
2	02.03.15	BID SET

Revision

No.	Date	Description

DFCM Project No. 14031810

SAA Project No. 214016

Drawing Title

MECHANICAL LEVEL 2 DEMO PLAN

Sheet Number

MD102

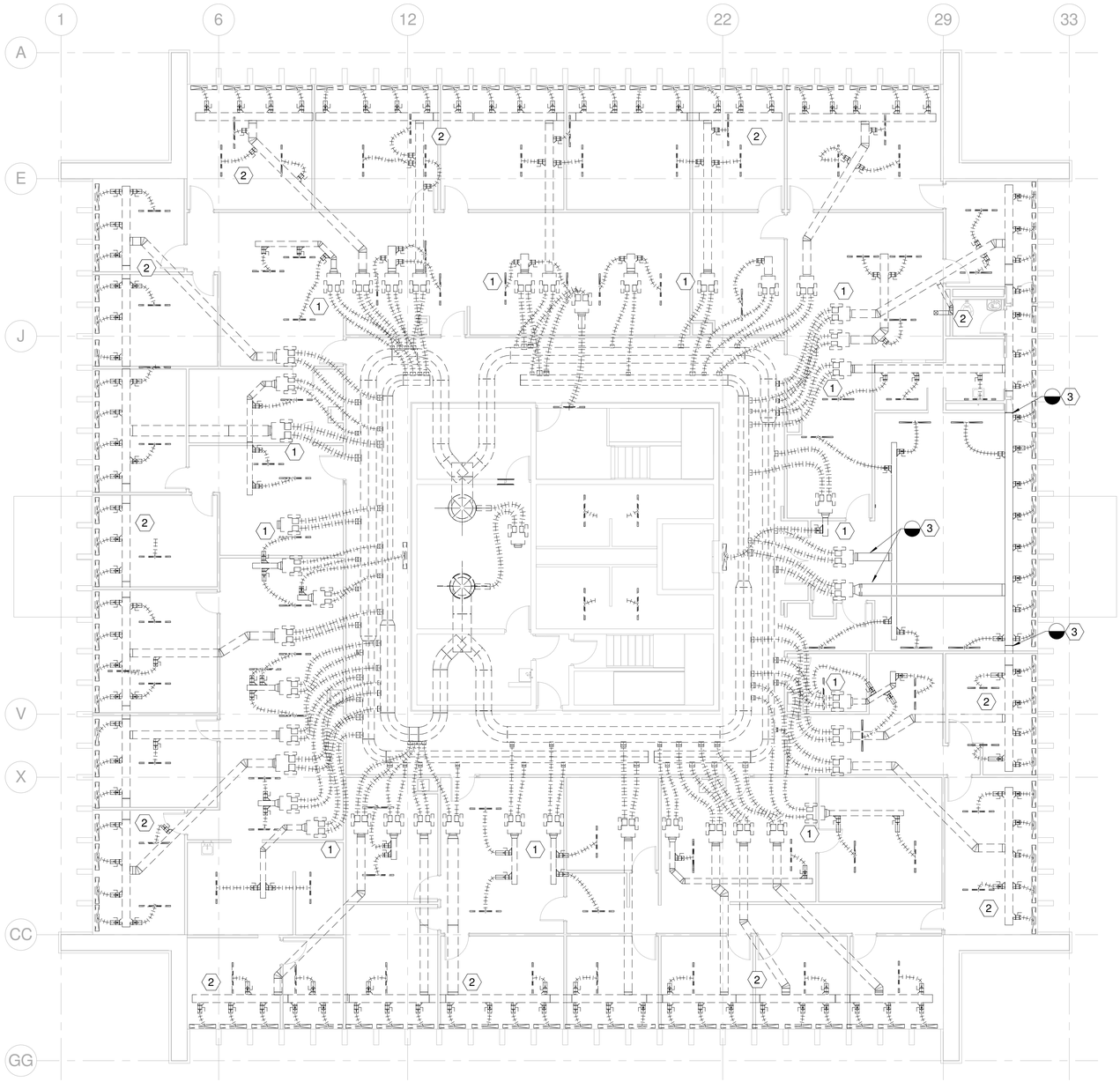

SHEET NOTES

1 REMOVE EXISTING DUAL DUCT BOXES AND ALL ASSOCIATED ITEMS IN THIS APPROXIMATE LOCATION. FIELD VERIFY.

2 REMOVE EXISTING DUCTWORK, DIFFUSERS, AND GRILLES AS SHOWN. FIELD VERIFY.

3 EXISTING DUCTWORK IN THIS CONFERENCE ROOM SHALL REMAIN AND BE REUSED. REMOVE DUCTWORK BACK TO THIS APPROXIMATE LOCATION. FIELD VERIFY.

GENERAL NOTES:

1. REMOVE EXISTING DUCTWORK AND EQUIPMENT AS SHOWN. THE INTENT IS TO REMOVE THE EXISTING DUAL DUCT SYSTEM AND EQUIPMENT AND REPLACE IT WITH A WATER SOURCE VRF SYSTEM.

1 MECHANICAL LEVEL 3 DEMO PLAN

1/8" = 1'-0"

SANDERS ASSOCIATES ARCHITECTS
2668 Grant Avenue
Ogden, UT 84401
P.: 801.621.7303
www.sandersarch.com

Seal

PROFESSIONAL ENGINEER
01.16.15
WINWARD M. PACKER
No. 375080
STATE OF UTAH

Consultant

Project Name

WSU- MILLER ADMINISTRATION
MEP Upgrades and Remodel
3848 HARRISON BLVD.
OGDEN, UTAH 84401

Issued

No.	Date	Description
1	01.16.15	DFCM PLAN REVIEW
2	02.03.15	BID SET

Revision

No.	Date	Description

DFCM Project No. 14031810

SAA Project No. 214016

Drawing Title

MECHANICAL LEVEL 3 DEMO PLAN

Sheet Number

MD103

DFCM approval

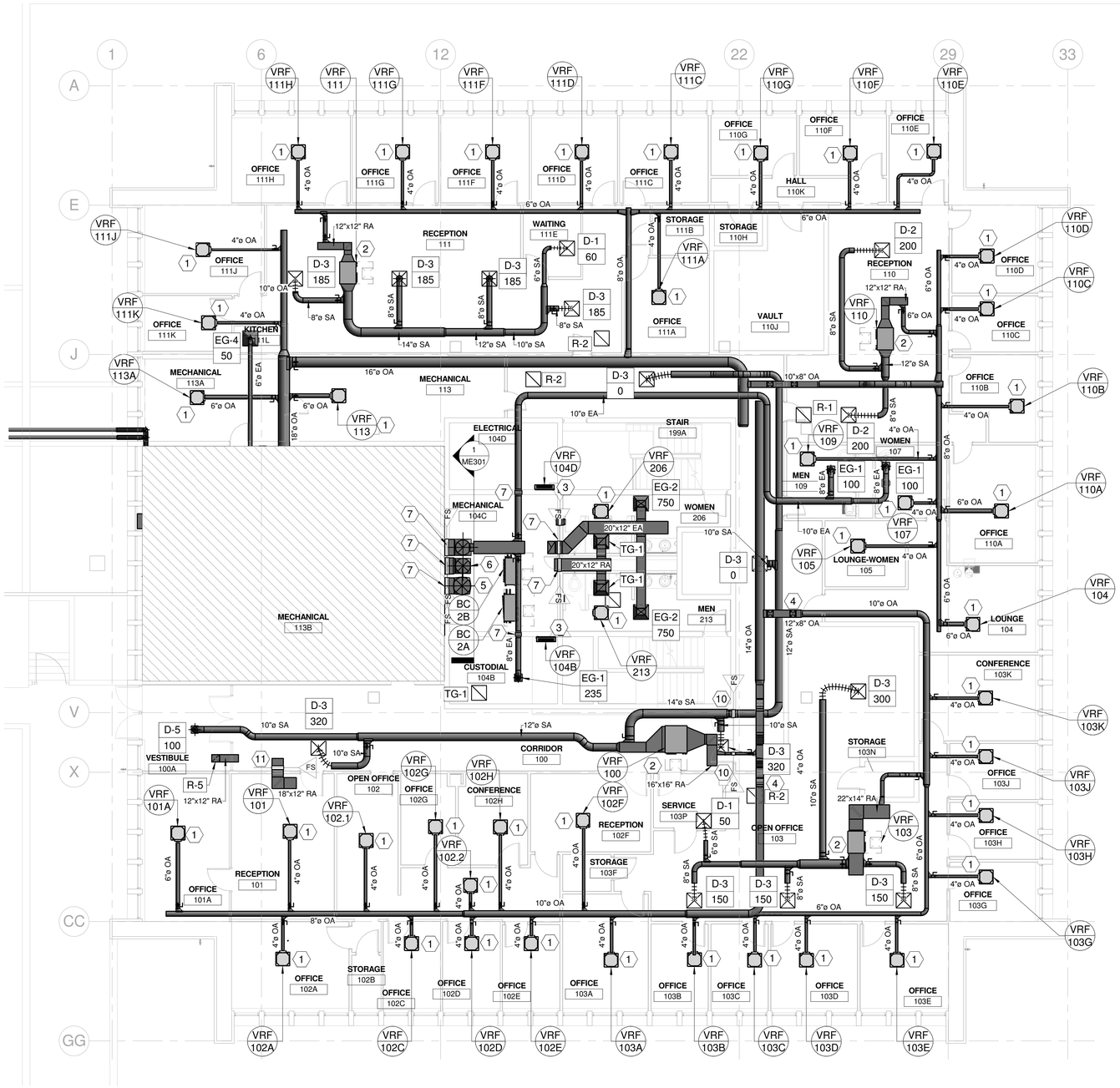

1 MECHANICAL LEVEL 1 PLAN

1/8" = 1'-0"

SHEET NOTES

1. PROVIDE NEW CEILING CASSETTE IN THIS APPROXIMATE LOCATION. ROUTE OUTSIDE AIR DUCT TO UNIT AND BALANCE TO CFM SHOWN IN SCHEDULE. PROVIDE CONDENSATE PUMP AND ROUTE CONDENSATE PIPING TO JANITORS SINK.
2. PROVIDE DUCTED VRF UNIT. PROVIDE LINED SOUND BOOT WITH OPEN END INTO PLENUM. TIE OUTSIDE AIR INTO RETURN BOOT AS FAR AWAY FROM UNIT AS POSSIBLE.
3. PROVIDE NEW WALL MOUNTED VRF UNIT IN THIS APPROXIMATE LOCATION. PROVIDE CONDENSATE PUMP AND ROUTE CONDENSATE PIPING TO JANITORS SINK.
4. COORDINATE WITH EXISTING STRUCTURE AND NEW CEILINGS TO FIT NEW DUCTWORK IN THIS LOCATION.
5. PROVIDE FRESH AIR INTAKE DUCT FROM FRESH AIR PENTHOUSE TO ERV.
6. PROVIDE FRESH AIR SUPPLY FROM ERV UNIT TO VRF UNITS.
7. PROVIDE FIRE SMOKE DAMPER ON DUCTWORK PENETRATING SHAFT WALL.
8. PROVIDE INLINE EXHAUST FAN IN THE ELEVATOR EQUIPMENT ROOM BELOW RESTROOMS. PROVIDE THERMOSTAT TO CONTROL FAN TO MAINTAIN ROOM AT OR BELOW 80 DEGREES.
9. PROVIDE TRANSFER DUCT THROUGH WALL. TERMINATE EACH SIDE WITH OPEN DUCT.
10. PROVIDE COMBINATION FIRE AND SMOKE DAMPER ON DUCTWORK PENETRATING RATED CORRIDOR WALLS.
11. PROVIDE TRANSFER DUCT THROUGH RATED WALL. PROVIDE COMBINATION FIRE AND SMOKE DAMPER.

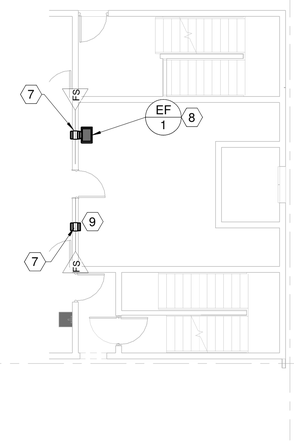

SANDERS ASSOCIATES ARCHITECTS
2668 Grant Avenue
Ogden, UT 84401
P.: 801.621.7303
www.sandersarch.com

Seal

PROFESSIONAL ENGINEER 01.16.15 WINWARD M. PACKER No. 375080 STATE OF UTAH

Consultant

Project Name

WSU- MILLER ADMINISTRATION

MEP Upgrades and Remodel

3848 HARRISON BLVD.
OGDEN, UTAH 84401

Issued

No.	Date	Description
1	01.16.15	DFCM PLAN REVIEW
2	02.03.15	BID SET

Revision

No.	Date	Description
1	02/02/15	PLAN REVIEW

DFCM Project No. 14031810

SAA Project No. 214016

Drawing Title

MECHANICAL LEVEL 1 PLAN

Sheet Number

ME101

DFCM approval

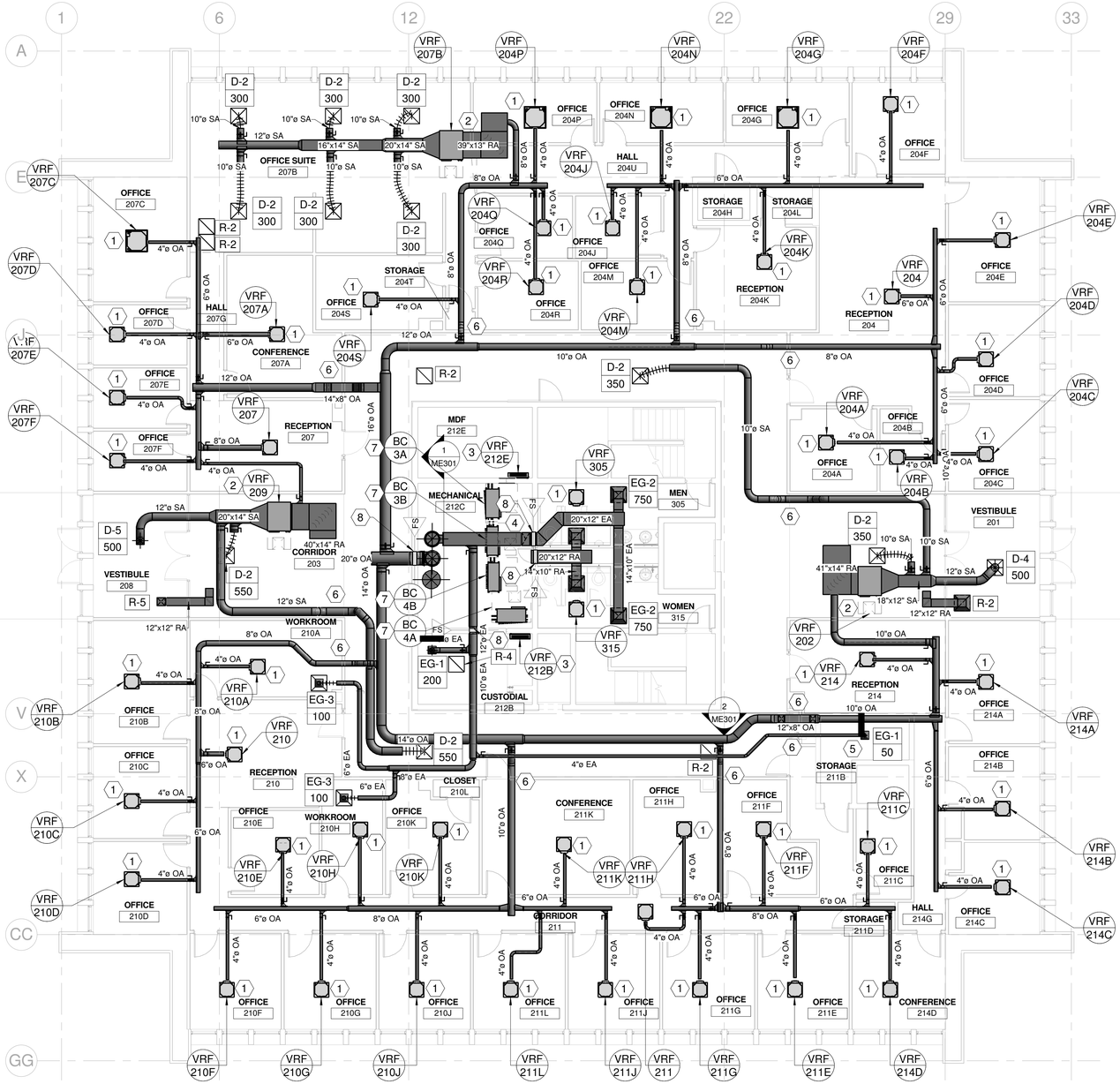

1 MECHANICAL LEVEL 2 PLAN

1/8" = 1'-0"

SHEET NOTES

1. PROVIDE NEW CEILING CASSETTE IN THIS APPROXIMATE LOCATION. ROUTE OUTSIDE AIR DUCT TO UNIT AND BALANCE TO CFM SHOWN IN SCHEDULE. PROVIDE CONDENSATE PUMP AND ROUTE CONDENSATE PIPING TO JANITORS SINK.
2. PROVIDE DUCTED VRF UNIT. PROVIDE LINED SOUND BOOT WITH OPEN END INTO PLENUM. TIE OUTSIDE AIR INTO RETURN BOOT AS FAR AWAY FROM UNIT AS POSSIBLE.
3. PROVIDE NEW WALL MOUNTED VRF UNIT IN THIS APPROXIMATE LOCATION. PROVIDE CONDENSATE PUMP AND ROUTE CONDENSATE PIPING TO JANITORS SINK.
4. ROUTE EXHAUST AIR DUCT HIGH IN THE MECHANICAL ROOM THEM DROP DOWN EXPOSED AND INTO THE CEILING SPACE OF THE RESTROOMS. FIELD VERIFY. TRANSFER AIR SHALL TERMINATE IN THE MECHANICAL ROOM WITH OPEN END THEN ROUTE TO TRANSFER GRILLES IN THE RESTROOMS AS SHOWN.
5. COORDINATE WITH G.C. TO CORE DRILL THROUGH VAULT FOR EXHAUST DUCTWORK.
6. COORDINATE WITH EXISTING STRUCTURE AND NEW CEILINGS TO FIT NEW DUCTWORK IN THIS LOCATION.
7. PROVIDE REFRIGERANT PIPING BRANCH CONTROLLERS IN THIS APPROXIMATE LOCATION. INSTALL PER MANUFACTURERS REQUIREMENTS WITH RECOMMENDED CLEARANCE.
8. PROVIDE FIRE SMOKE DAMPER ON DUCTWORK PENETRATING SHAFT WALL.

SANDERS ASSOCIATES ARCHITECTS
2668 Grant Avenue
Ogden, UT 84401
P.: 801.621.7303
www.sandersarch.com

Seal

PROFESSIONAL ENGINEER 01.16.15 WINWARD M. PACKER No. 375080 STATE OF UTAH

Consultant

Project Name

WSU- MILLER ADMINISTRATION

MEP Upgrades and Remodel

3848 HARRISON BLVD.
OGDEN, UTAH 84401

Issued

No.	Date	Description
1	01.16.15	DFCM PLAN REVIEW
2	02.03.15	BID SET

Revision

No.	Date	Description

DFCM Project No. 14031810

SAA Project No. 214016

Drawing Title

MECHANICAL LEVEL 2 PLAN

Sheet Number

ME102

DFCM approval

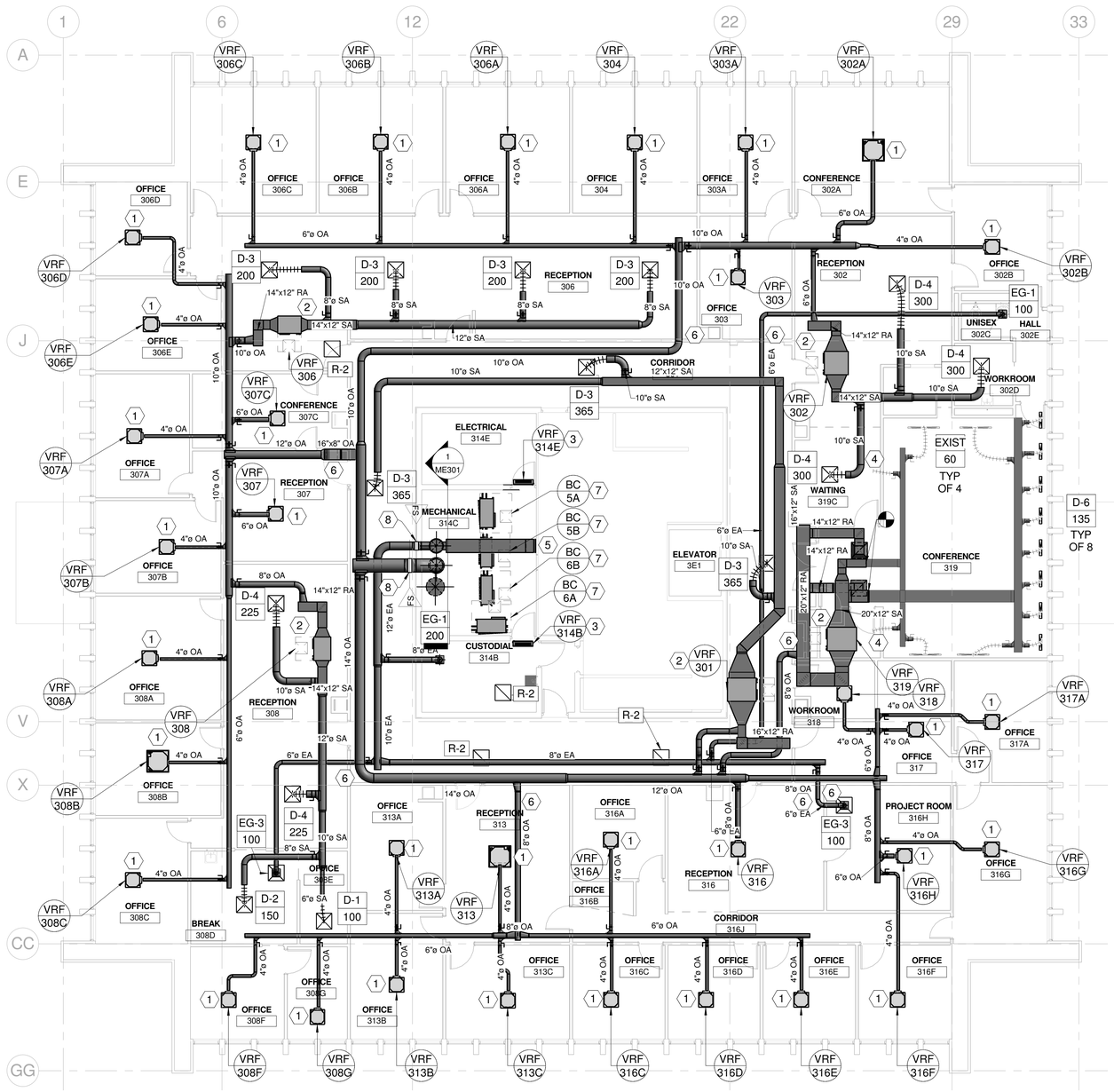

1 MECHANICAL LEVEL 3 PLAN

1/8" = 1'-0"

SHEET NOTES

1. PROVIDE NEW CEILING CASSETTE IN THIS APPROXIMATE LOCATION. ROUTE OUTSIDE AIR DUCT TO UNIT AND BALANCE TO CFM SHOWN IN SCHEDULE. PROVIDE CONDENSATE PUMP AND ROUTE CONDENSATE PIPING TO JANITORS SINK.
2. PROVIDE DUCTED VRF UNIT. PROVIDE LINED SOUND BOOT WITH OPEN END INTO PLENUM. TIE OUTSIDE AIR INTO RETURN BOOT AS FAR AWAY FROM UNIT AS POSSIBLE.
3. PROVIDE NEW WALL MOUNTED VRF UNIT IN THIS APPROXIMATE LOCATION. PROVIDE CONDENSATE PUMP AND ROUTE CONDENSATE PIPING TO JANITORS SINK.
4. CUT AND CAP EXISTING SUPPLY DUCT IN THIS APPROXIMATE LOCATION. FIELD VERIFY.
5. ROUTE EXHAUST AIR DUCT HIGH IN THE MECHANICAL ROOM THEM DROP DOWN EXPOSED AND INTO THE CEILING SPACE OF THE RESTROOMS. FIELD VERIFY. TRANSFER AIR SHALL TERMINATE IN THE MECHANICAL ROOM WITH OPEN END THEN ROUTE TO TRANSFER GRILLES IN THE RESTROOMS AS SHOWN.
6. COORDINATE WITH EXISTING STRUCTURE AND NEW CEILINGS TO FIT NEW DUCTWORK IN THIS LOCATION.
7. PROVIDE REFRIGERANT PIPING BRANCH CONTROLLERS IN THIS APPROXIMATE LOCATION. INSTALL PER MANUFACTURERS REQUIREMENTS WITH RECOMMENDED CLEARANCE.
8. PROVIDE FIRE SMOKE DAMPER ON DUCTWORK PENETRATING SHAFT WALL.

GENERAL NOTES:
1. COORDINATE WITH G.C. TO CORE DRILL THROUGH WALLS SURROUNDING THE MECHANICAL ROOM AND CUSTODIAL CLOSETS.

SANDERS ASSOCIATES ARCHITECTS
2668 Grant Avenue
Ogden, UT 84401
P.: 801.621.7303
www.sandersarch.com

Seal

PROFESSIONAL ENGINEER 01.16.15 WINWARD M. PACKER No. 375080 STATE OF UTAH

Consultant

Project Name

WSU- MILLER ADMINISTRATION

MEP Upgrades and Remodel

3848 HARRISON BLVD.
OGDEN, UTAH 84401

Issued

No.	Date	Description
1	01.16.15	DFCM PLAN REVIEW
2	02.03.15	BID SET

Revision

No.	Date	Description

DFCM Project No. 14031810

SAA Project No. 214016

Drawing Title

MECHANICAL LEVEL 3 PLAN

Sheet Number

ME103

DFCM approval

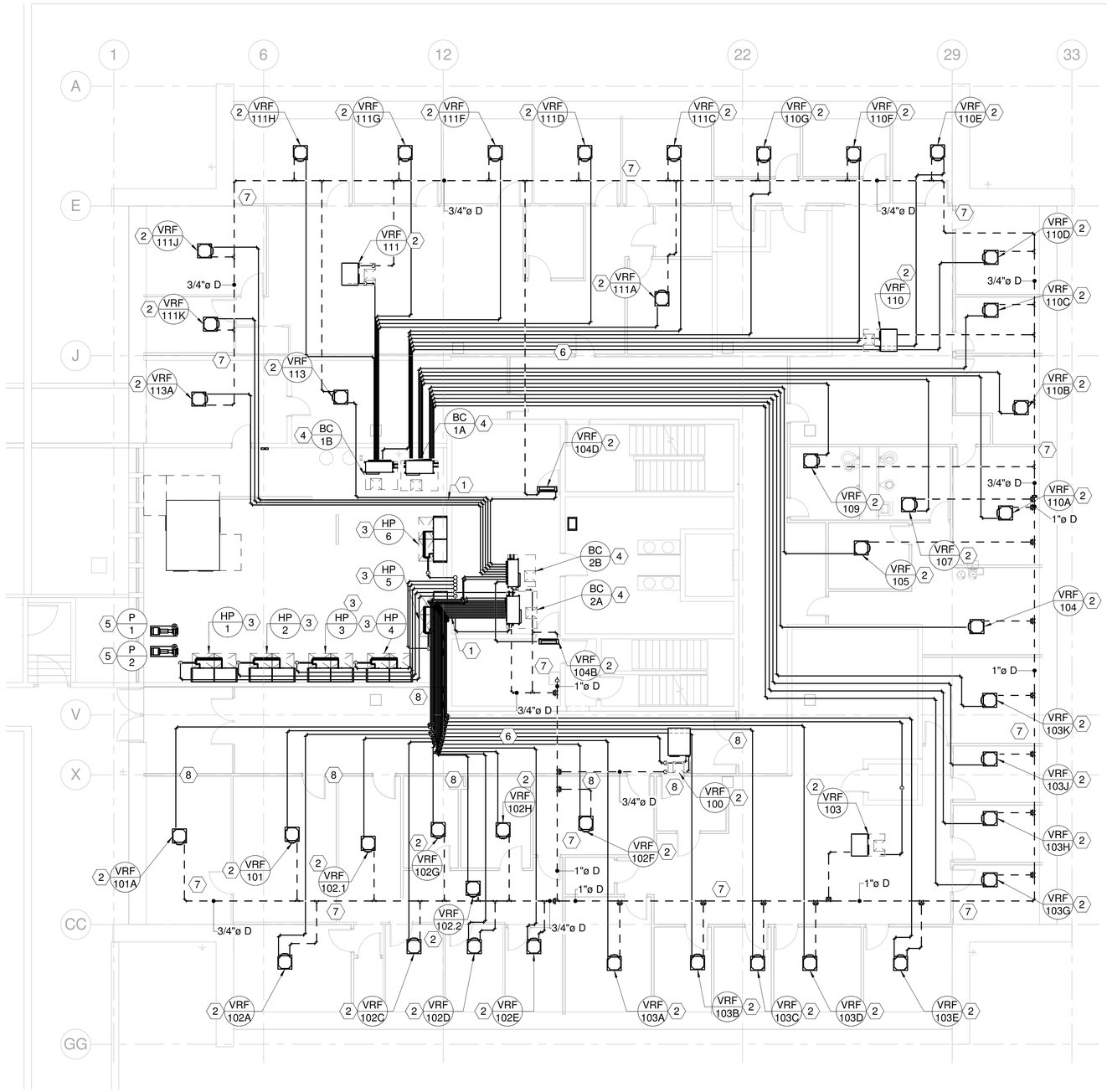

MECHANICAL PIPING LEVEL 1 PLAN

1 1/8" = 1'-0"

SHEET NOTES

1. REUSE THE EXISTING PENETRATIONS IN CONCRETE WALL FOR REFRIGERANT PIPING.
2. PROVIDE VRF EVAPORATOR UNIT. PIPE PER MANUFACTURERS RECOMMENDATIONS. PROVIDE PUMPED CONDENSATE PIPING TO MECH ROOM.
3. PROVIDE VRF WATER COOLED HEAT PUMP. INSTALL PER MANUFACTURERS RECOMMENDATIONS.
4. PROVIDE BRANCH CONTROLLERS. INSTALL PER MANUFACTURERS RECOMMENDATIONS. PROVIDE CONDENSATE PIPING FROM BRANCH CONTROLLERS TO FLOOR DRAIN IN MECH ROOM.
5. PROVIDE CONDENSER WATER PUMPS.
6. PROVIDE REFRIGERANT PIPING FROM BRANCH CONTROLLERS TO VRF EVAPORATORS. COORDINATE PIPE SIZING WITH SCHEMATICS AND MANUFACTURERS RECOMMENDATIONS.
7. PROVIDE PUMPED CONDENSATE DRAIN PIPING FROM EACH UNIT TO JANITORS SINK.
8. FIRE CAULK AROUND PIPING THAT PENETRATES FIRE RATED CORRIDOR WALLS.

SANDERS ASSOCIATES ARCHITECTS
2668 Grant Avenue
Ogden, UT 84401
P.: 801.621.7303
www.sandersarch.com

Seal

PROFESSIONAL ENGINEER 01.16.15 WINWARD M. PACKER No. 375080 STATE OF UTAH

Consultant

Project Name

WSU- MILLER ADMINISTRATION

MEP Upgrades and Remodel

3848 HARRISON BLVD.
OGDEN, UTAH 84401

Issued

No.	Date	Description
1	01.16.15	DFCM PLAN REVIEW
2	02.03.15	BID SET

Revision

No.	Date	Description
1	02/02/15	PLAN REVIEW

DFCM Project No. 14031810

SAA Project No. 214016

Drawing Title

MECHANICAL PIPING LEVEL 1 PLAN

Sheet Number

ME104

DFCM approval

SHEET NOTES

1. REUSE THE EXISTING PENETRATIONS IN CONCRETE WALL FOR REFRIGERANT PIPING.
2. COORDINATE WITH GC TO PROVIDE NEW 14" ROUND CORE DRILLED HOLES TO RUN REFRIGERANT PIPING. SEE DETAIL. SEAL AROUND PENETRATIONS WITH FIRE CAULK.
3. PROVIDE VRF EVAPORATOR UNIT. PIPE PER MANUFACTURERS RECOMMENDATIONS. PROVIDE PUMPED CONDENSATE PIPING TO MECH ROOM.
4. PROVIDE BRANCH CONTROLLERS. INSTALL PER MANUFACTURERS RECOMMENDATIONS. PROVIDE CONDENSATE PIPING FROM BRANCH CONTROLLERS TO FLOOR DRAIN IN MECH ROOM.
5. PROVIDE REFRIGERANT PIPING FROM BRANCH CONTROLLERS TO VRF EVAPORATORS. COORDINATE PIPE SIZING WITH SCHEMATICS AND MANUFACTURERS RECOMMENDATIONS.
6. PROVIDE PUMPED CONDENSATE DRAIN PIPING FROM EACH UNIT TO JANITORS SINK.

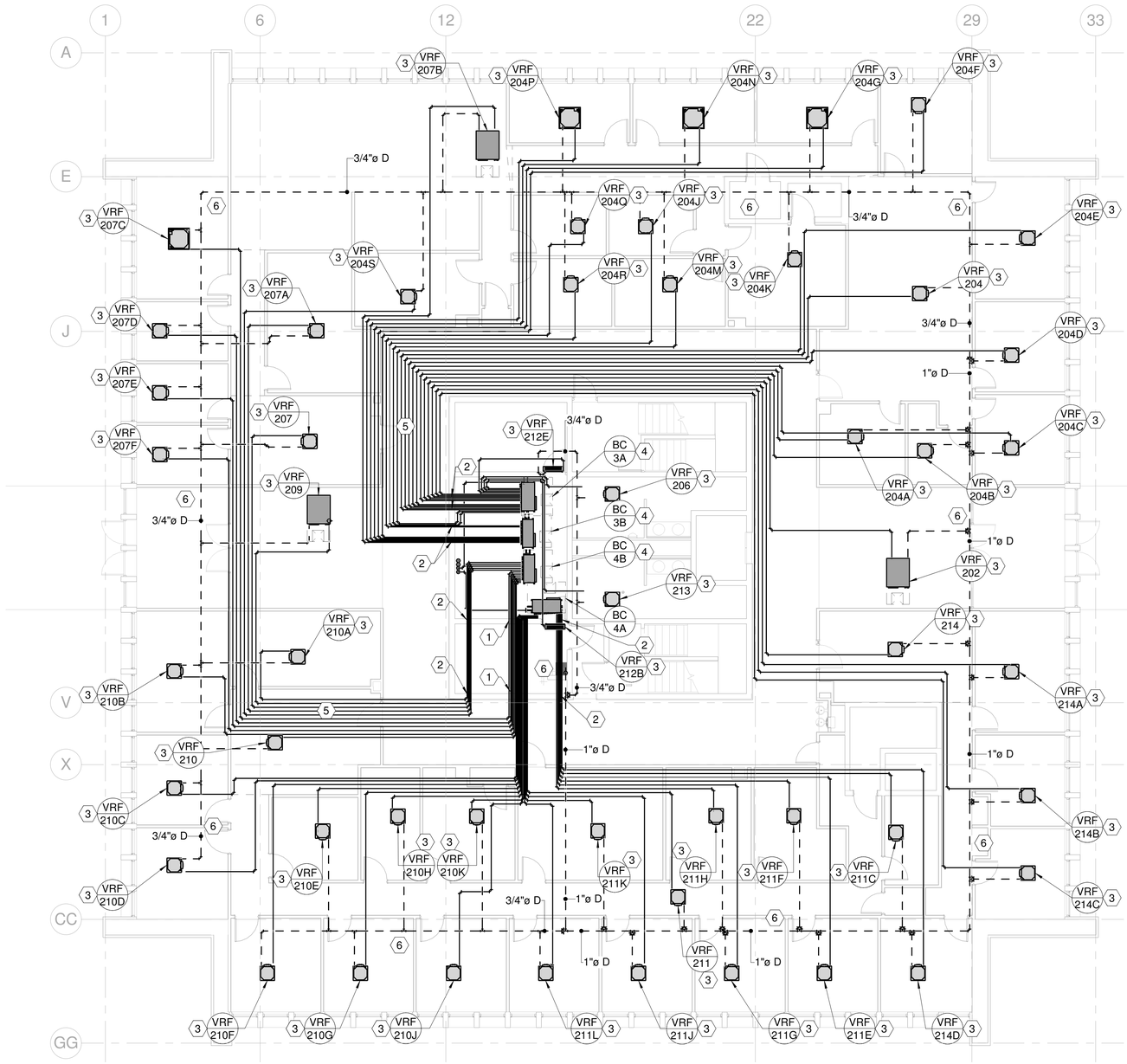

MECHANICAL PIPING LEVEL 2 PLAN

1 — 1/8" = 1'-0"

SANDERS ASSOCIATES ARCHITECTS
2668 Grant Avenue
Ogden, UT 84401
P : 801.621.7303
www.sandersarch.com

Seal

PROFESSIONAL ENGINEER
01.16.15
WINWARD M. PACKER
No. 375080
STATE OF UTAH

Consultant

Project Name

WSU- MILLER ADMINISTRATION

MEP Upgrades and Remodel

3848 HARRISON BLVD.
OGDEN, UTAH 84401

Issued

No.	Date	Description
1	01.16.15	DFCM PLAN REVIEW
2	02.03.15	BID SET

Revision

No.	Date	Description

DFCM Project No. 14031810

SAA Project No. 214016

Drawing Title

MECHANICAL PIPING LEVEL 2 PLAN

Sheet Number

ME105

DFCM approval

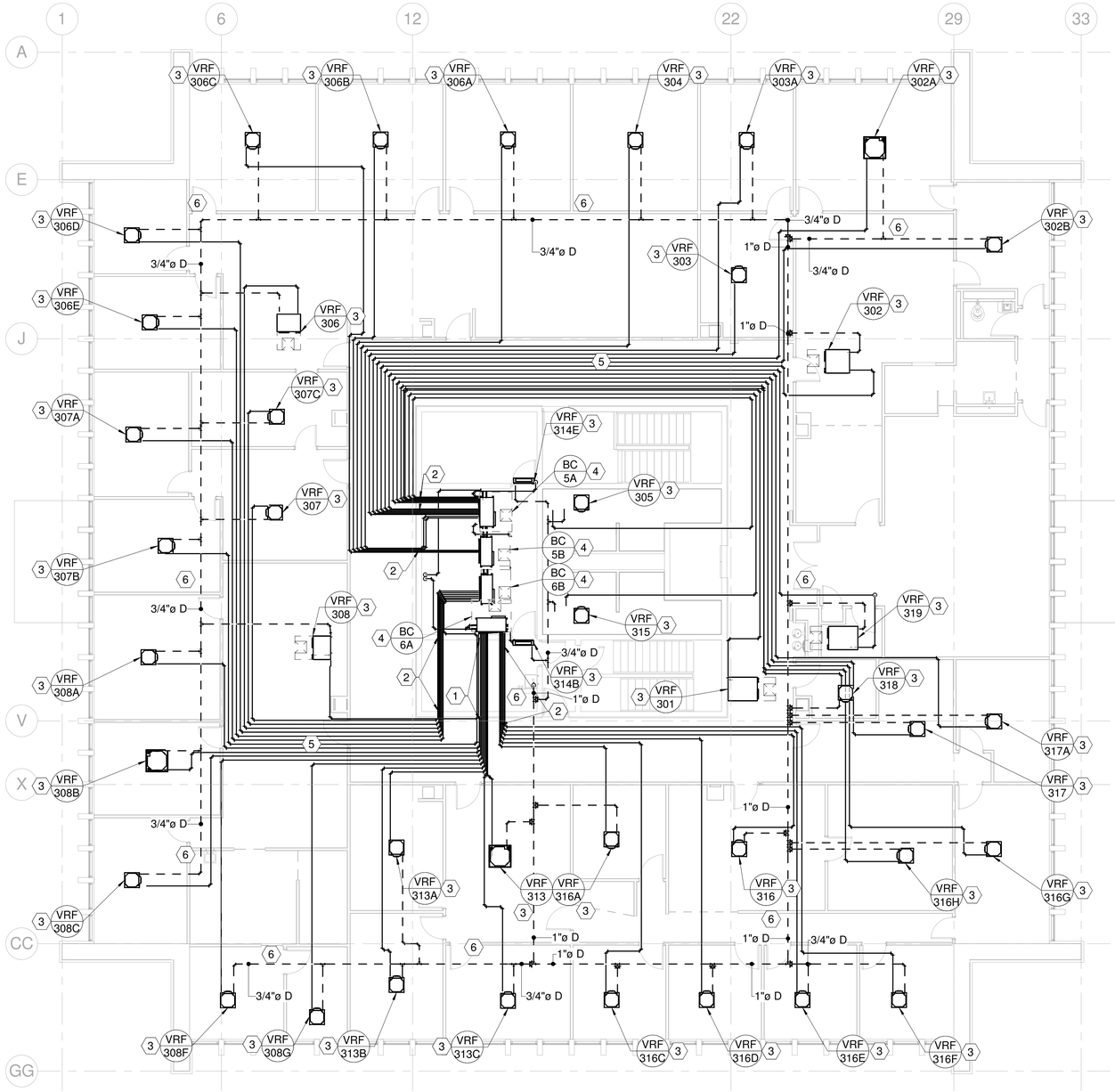

SHEET NOTES

1. REUSE THE EXISTING PENETRATIONS IN CONCRETE WALL FOR REFRIGERANT PIPING.
2. COORDINATE WITH GC TO PROVIDE NEW 14" ROUND CORE DRILLED HOLES TO RUN REFRIGERANT PIPING. SEE DETAIL. SEAL AROUND PENETRATIONS WITH FIRE CAULK.
3. PROVIDE VRF EVAPORATOR UNIT. PIPE PER MANUFACTURERS RECOMMENDATIONS. PROVIDE PUMPED CONDENSATE PIPING TO MECH ROOM.
4. PROVIDE BRANCH CONTROLLERS. INSTALL PER MANUFACTURERS RECOMMENDATIONS. PROVIDE CONDENSATE PIPING FROM BRANCH CONTROLLERS TO FLOOR DRAIN IN MECH ROOM.
5. PROVIDE REFRIGERANT PIPING FROM BRANCH CONTROLLERS TO VRF EVAPORATORS. COORDINATE PIPE SIZING WITH SCHEMATICS AND MANUFACTURERS RECOMMENDATIONS.
6. PROVIDE PUMPED CONDENSATE DRAIN PIPING FROM EACH UNIT TO JANITORS SINK.

1 MECHANICAL PIPING LEVEL 3 PLAN

1/8" = 1'-0"

SANDERS ASSOCIATES ARCHITECTS
2668 Grant Avenue
Ogden, UT 84401
P : 801.621.7303
www.sandersarch.com

Seal

PROFESSIONAL ENGINEER 01.16.15 WINWARD M. PACKER No. 375080 STATE OF UTAH

Consultant

Project Name

WSU- MILLER ADMINISTRATION

MEP Upgrades and Remodel

3848 HARRISON BLVD.
OGDEN, UTAH 84401

Issued

No.	Date	Description
1	01.16.15	DFCM PLAN REVIEW
2	02.03.15	BID SET

Revision

No.	Date	Description

DFCM Project No. 14031810

SAA Project No. 214016

Drawing Title

MECHANICAL PIPING LEVEL 3 PLAN

Sheet Number

ME106

DFCM approval

SHEET NOTES

1 PROVIDE ROOF MOUNTED FRESH AIR INTAKE PENTHOUSE. DUCT TO ERV IN MECH ROOM. COORDINATE WITH ARCH AND G.C. TO CUT, PATCH AND SEAL ROOFING.

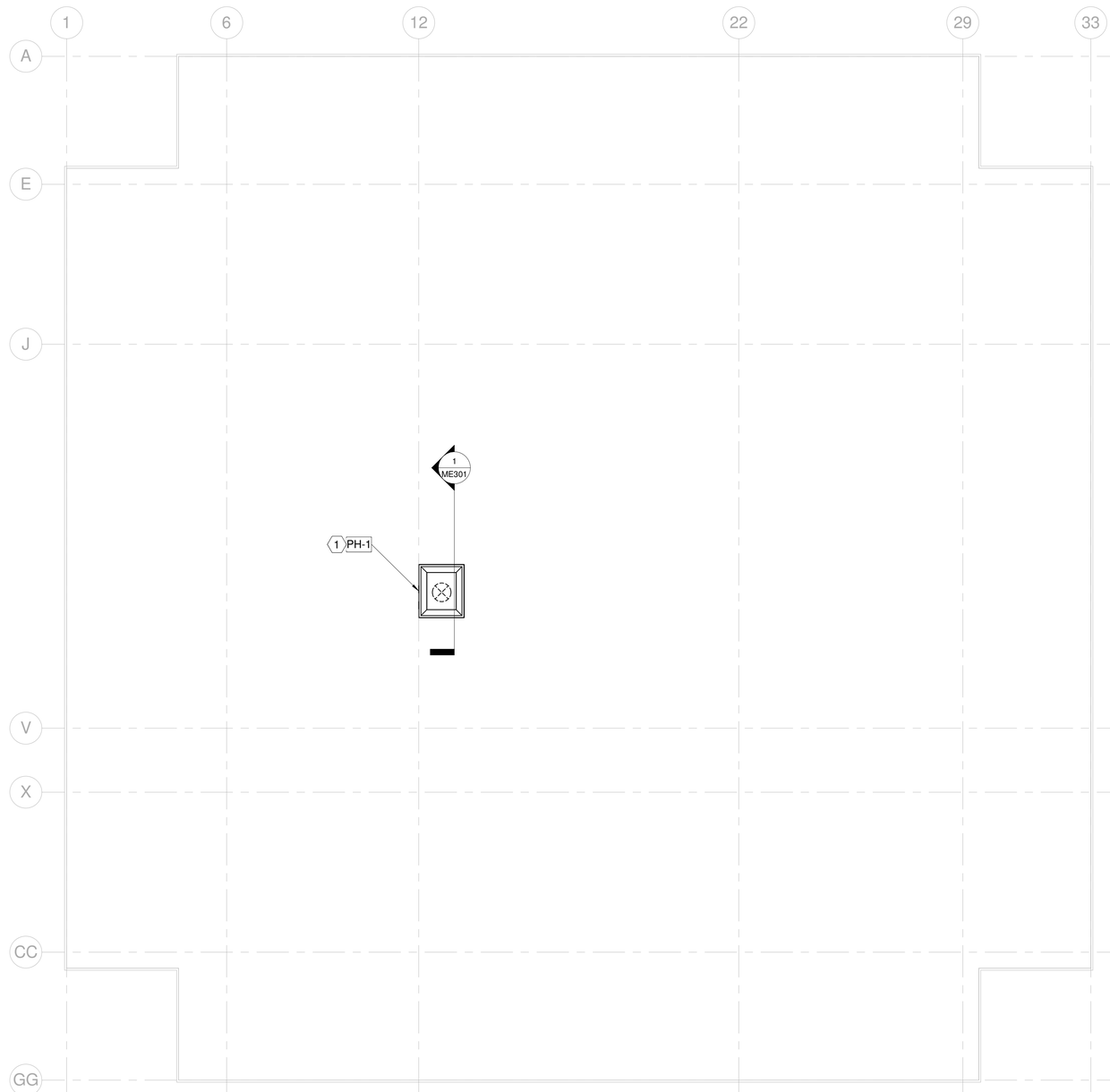

1 MECHANICAL ROOF PLAN
1/8" = 1'-0"

SANDERS ASSOCIATES ARCHITECTS
2668 Grant Avenue
Ogden, UT 84401
P : 801.621.7303
www.sandersarch.com

Seal

PROFESSIONAL ENGINEER
01.16.15
WINWARD M. PACKER
No. 375080
STATE OF UTAH

Consultant

Project Name

WSU- MILLER ADMINISTRATION

MEP Upgrades and Remodel

3848 HARRISON BLVD.
OGDEN, UTAH 84401

Issued

No.	Date	Description
1	01.16.15	DFCM PLAN REVIEW
2	02.03.15	BID SET

Revision

No.	Date	Description

DFCM Project No. 14031810

SAA Project No. 214016

Drawing Title

MECHANICAL ROOF PLAN

Sheet Number

ME107

DFCM approval

SHEET NOTES

1 ROUTE DUCTWORK BELOW EXISTING STRUCTURAL BEAM. FIELD VERIFY. COORDINATE WITH ALL OTHER DISCIPLINES AND EXISTING CONDITIONS.

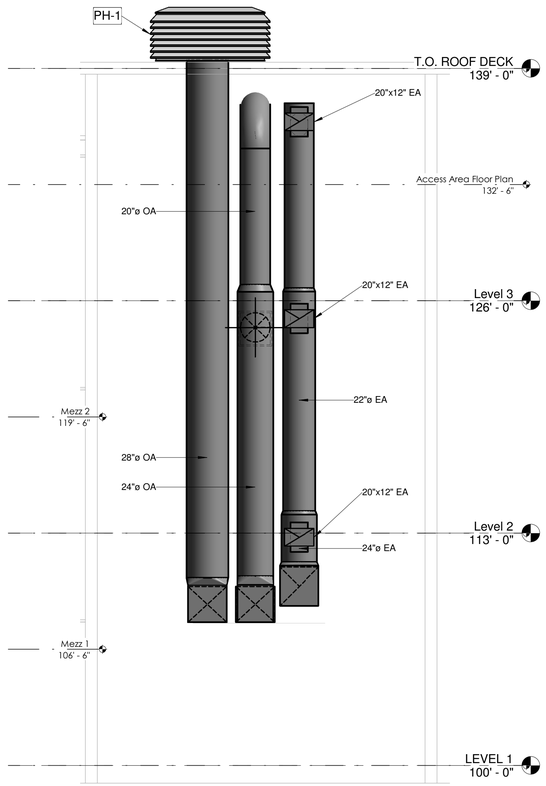

1 MECHANICAL SHAFT SECTION
1/4" = 1'-0"

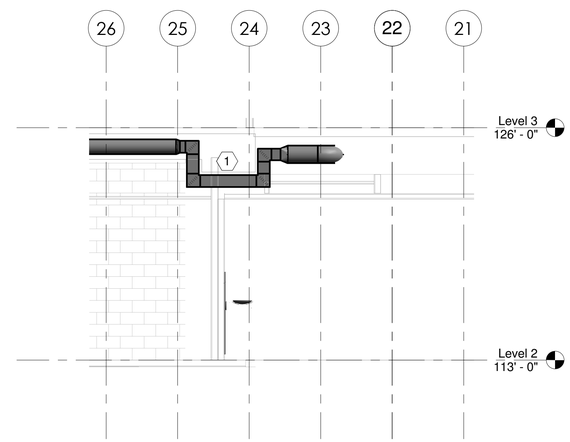

2 MECHANICAL DUCTWORK BELOW BEAM SECTION
1/4" = 1'-0"

SANDERS ASSOCIATES ARCHITECTS
2668 Grant Avenue
Ogden, UT 84401
P : 801.621.7303
www.sandersarch.com

Seal

PROFESSIONAL ENGINEER
01.16.15
WINWARD M. PACKER
No. 375080
STATE OF UTAH

Consultant

Project Name

WSU- MILLER ADMINISTRATION

MEP Upgrades and Remodel

3848 HARRISON BLVD.
OGDEN, UTAH 84401

Issued

No.	Date	Description
1	01.16.15	DFCM PLAN REVIEW
2	02.03.15	BID SET

Revision

No.	Date	Description

DFCM Project No. 14031810

SAA Project No. 214016

Drawing Title

MECHANICAL SECTIONS

Sheet Number

ME301

DFCM approval

SHEET NOTES

1. BLANK OFF EXISTING LOUVER ON THE INSIDE WITH INSULATED SHEET METAL PANEL. FIELD VERIFY EXACT SIZE. SEAL TIGHT.
2. PROVIDE INSULATED PLENUM BOX AROUND THE EXISTING LOUVER AND DUCT TO THE RELIEF AIR OUTLET ON THE ERV-1 UNIT.
3. PROVIDE FLOW BTU METER ON CONDENSER WATER SUPPLY LINE.
4. PROVIDE WATER COOLED VRF HEAT PUMP UNIT. PIPE PER DETAILS AND INSTALL PER MANUFACTURERS RECOMMENDATIONS.
5. PROVIDE INDOOR PACKAGED AND DUCTED ENERGY RECOVERY VENTILATION UNIT.
6. PROVIDE REFRIGERANT PIPING FROM BRANCH CONTROLLERS TO VRF EVAPORATORS. COORDINATE PIPE SIZING WITH SCHEMATICS AND MANUFACTURERS RECOMMENDATIONS.
7. ADD ALTERNATE #2: PROVIDE BASE MOUNTED PUMPS IN THIS APPROXIMATE LOCATION. COORDINATE WITH ELECTRICAL TO PROVIDE VFD.

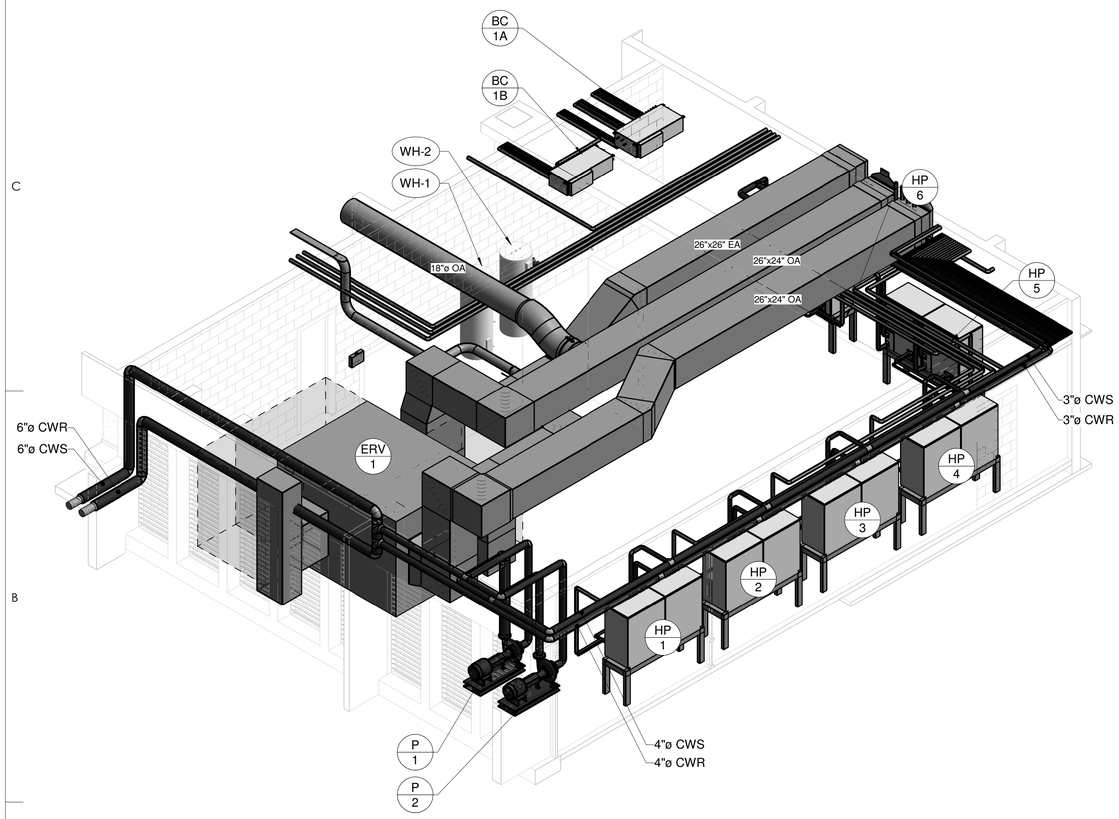

1 MECHANICAL ROOM ISOMETRIC

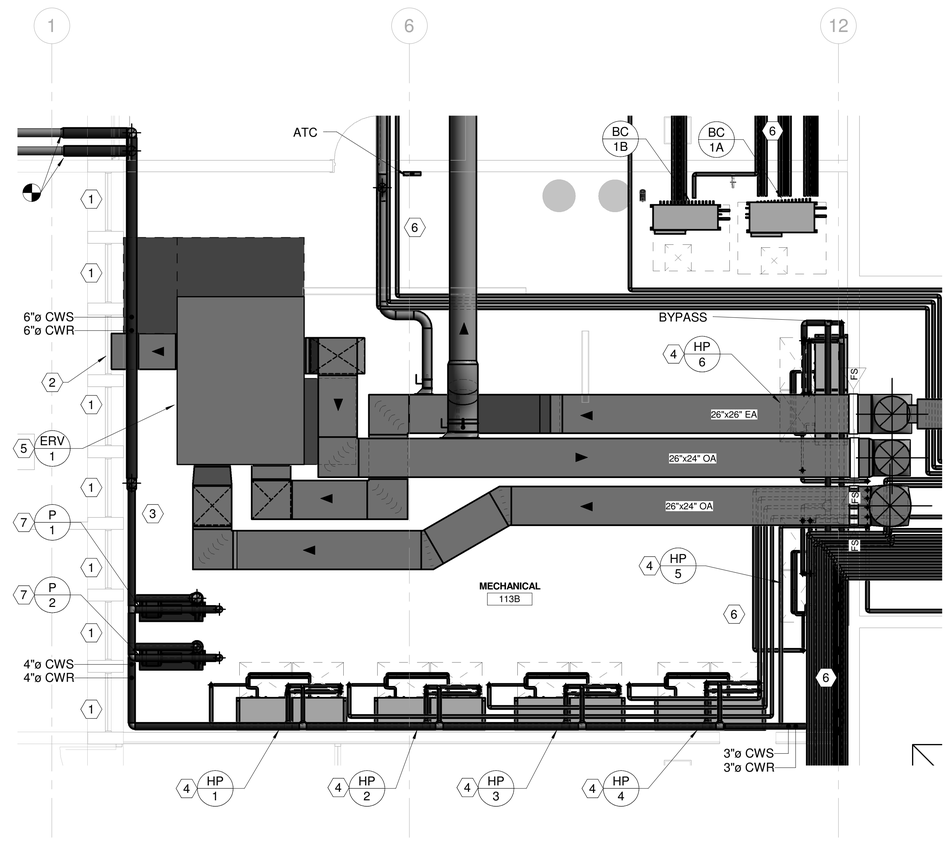

2 MECHANICAL ROOM LARGE SCALE PLAN
1/4" = 1'-0"

SANDERS ASSOCIATES ARCHITECTS
2668 Grant Avenue
Ogden, UT 84401
P : 801.621.7303
www.sandersarch.com

Seal

PROFESSIONAL ENGINEER
01.16.15
WINWARD M. PACKER
No. 375080
STATE OF UTAH

Consultant

Project Name

WSU- MILLER ADMINISTRATION

MEP Upgrades and Remodel

3848 HARRISON BLVD.
OGDEN, UTAH 84401

Issued

No.	Date	Description
1	01.16.15	DFCM PLAN REVIEW
2	02.03.15	BID SET

Revision

No.	Date	Description

DFCM Project No. 14031810
SAA Project No. 214016

Drawing Title

MECHANICAL ROOM PLANS

Sheet Number

ME401

DFCM approval

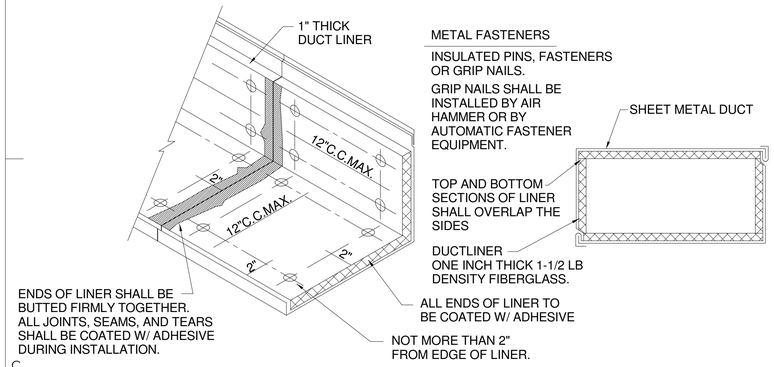

C1 DUCT LINER DETAIL
SCALE: NONE

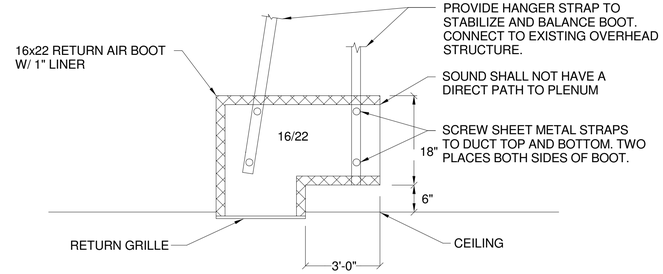

C3 RETURN AIR BOOT DETAIL
SCALE: NONE

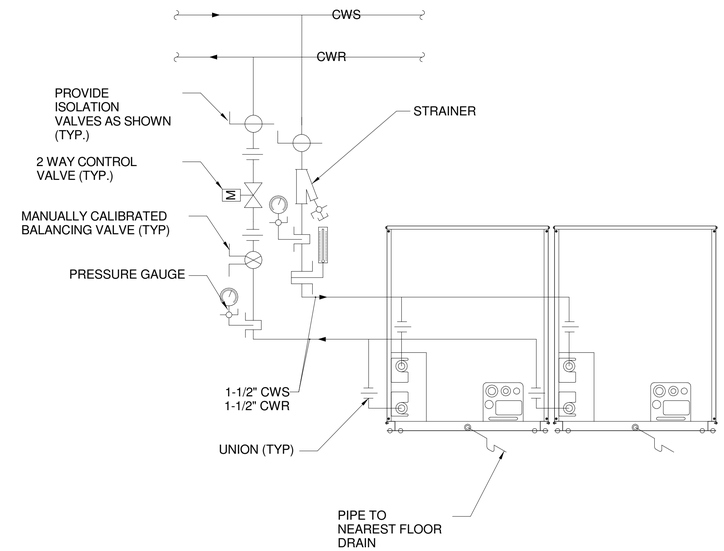

C5 HEAT PUMP HYDRONIC PIPING DETAIL
SCALE: NONE

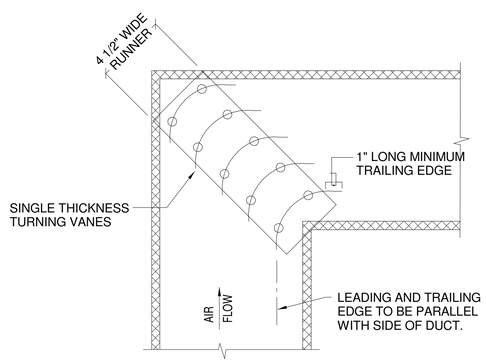

A1 SINGLE THICKNESS TURNING VANE DETAIL
SCALE: NONE

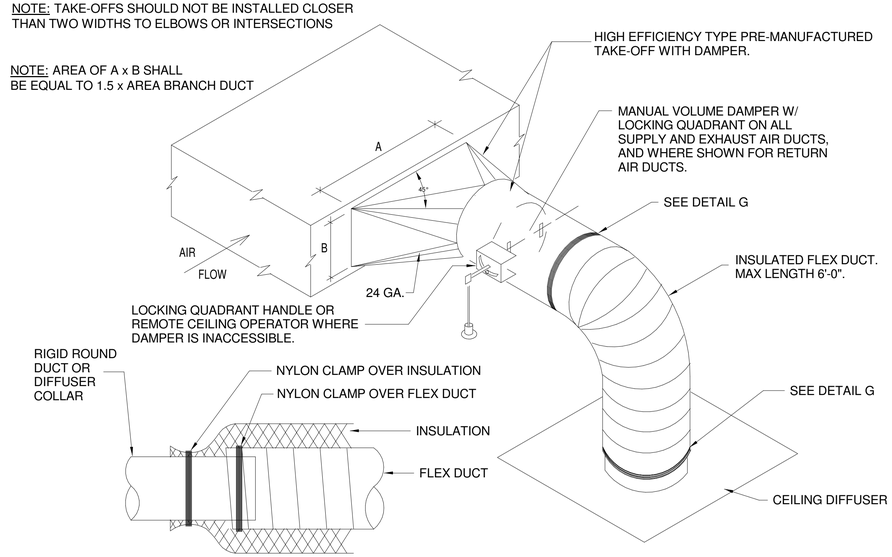

DETAIL G
SCALE: NONE

A3 SQUARE-TO-ROUND TAKE-OFF DETAIL
SCALE: NONE

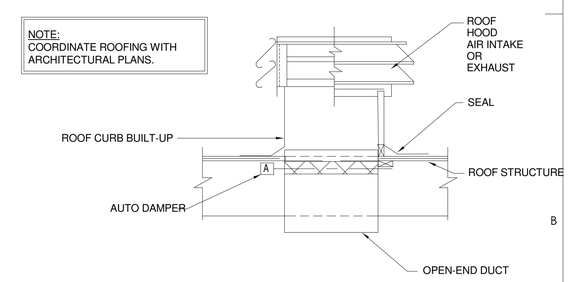

A5 ROOF HOOD DETAIL
SCALE: NONE

SANDERS ASSOCIATES ARCHITECTS
2668 Grant Avenue
Ogden, UT 84401
P.: 801.621.7303
www.sandersarch.com

Seal

PROFESSIONAL ENGINEER 01.16.15 WINWARD M. PACKER No. 375080 STATE OF UTAH

Consultant

Project Name

WSU- MILLER ADMINISTRATION
MEP Upgrades and Remodel
3848 HARRISON BLVD.
OGDEN, UTAH 84401

Issued

No.	Date	Description
1	01.16.15	DFCM PLAN REVIEW
2	02.03.15	BID SET

Revision

No.	Date	Description

DFCM Project No. 14031810
SAA Project No. 214016

Drawing Title

MECHANICAL DETAILS

Sheet Number

ME501

DFCM approval

NOTE:
RUN STEEL COVER CONTINUOUS FROM CONDENSING UNIT TO RISERS OR PENETRATIONS AT BUILDING WALL OR ROOF.

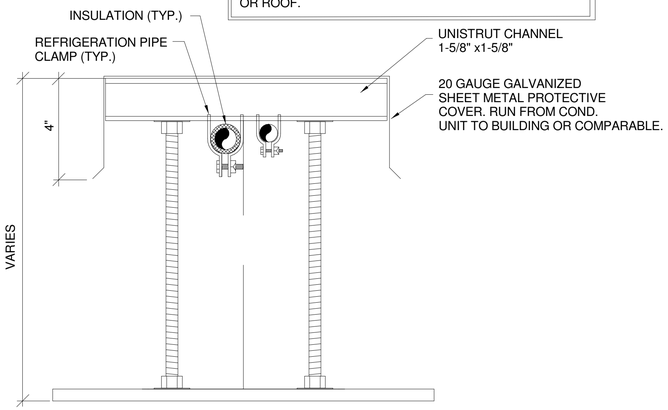

C1 EXTERIOR REFRIGERANT PIPE SUPPORT
SCALE: NONE

NOTE:
ADAPT TO SITE CONDITIONS IN A PROFESSIONAL MANNER.

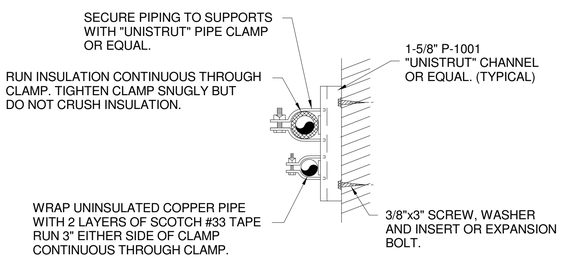

B1 SUSPENDED REFRIGERANT PIPE SUPPORT AT WALL
SCALE: NONE

NOTE:
PROVIDE ADEQUATE CLEARANCE AS REQUIRED TO MEET OSHA STANDARDS TO ALLOW ACCESS TO MOTOR PANEL AND FILTER PANEL.

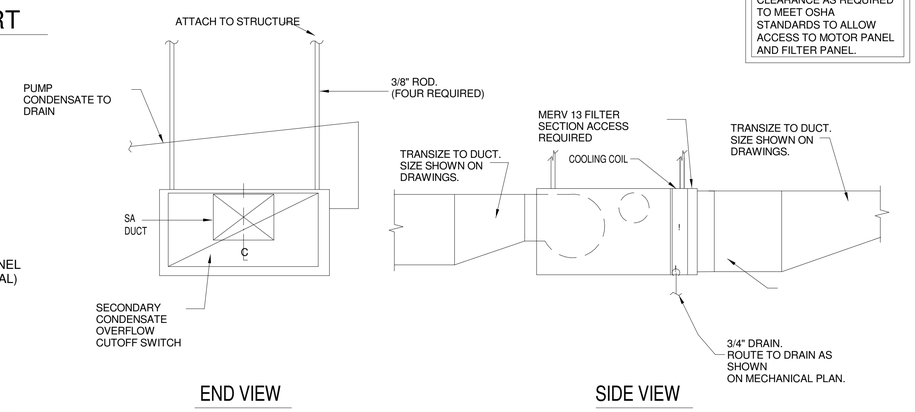

B3 VRV UNIT DETAIL
SCALE: NONE

NOTES:
1. DUCT OUTSIDE OF BUILDING ENVELOPE SHALL BE WRAPPED EXTERNALLY AS PER THE SPECIFICATIONS.

2. SEE SPECIFICATIONS FOR SEISMIC RESTRAINT REQUIREMENTS.

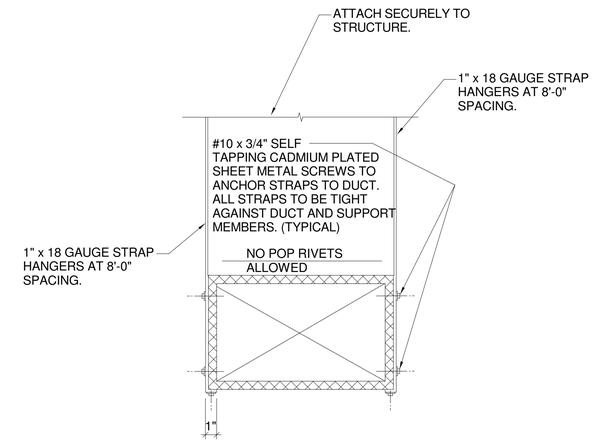

C4 DUCT STRAP HANGER DETAIL
SCALE: NONE

NOTE:
SEE SPECIFICATIONS FOR SEISMIC RESTRAINT REQUIREMENTS.

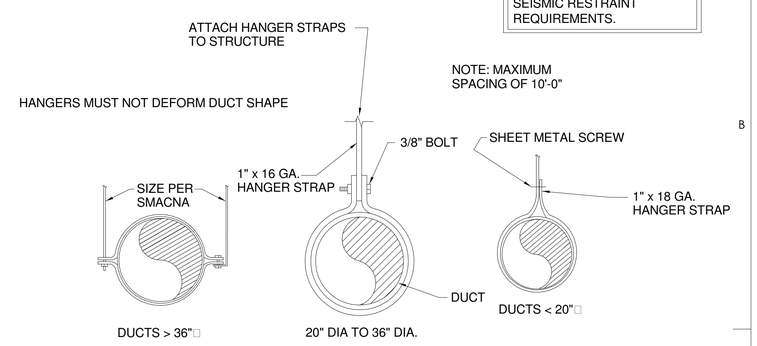

A4 ROUND DUCT SUPPORT DETAIL
SCALE: NONE

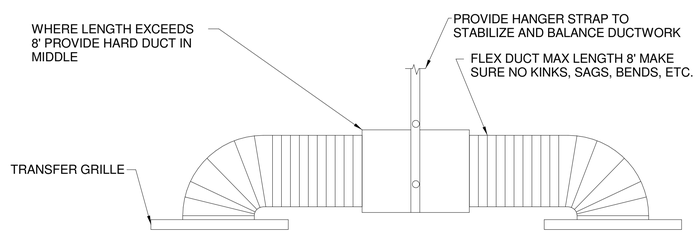

A1 TRANSFER AIR BOOT DETAIL
SCALE: NONE

SCALE: NONE

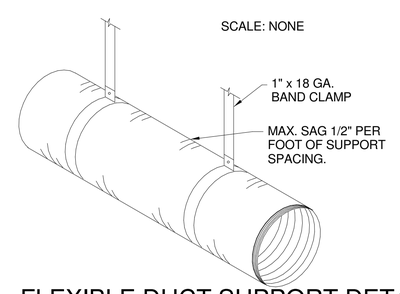

A3 FLEXIBLE DUCT SUPPORT DETAIL
SCALE: NONE

SANDERS ASSOCIATES ARCHITECTS
2668 Grant Avenue
Ogden, UT 84401
P.: 801.621.7303
www.sandersarch.com

Seal

PROFESSIONAL ENGINEER 01.16.15 WINWARD M. PACKER No. 375080 STATE OF UTAH

Consultant

Project Name

WSU- MILLER ADMINISTRATION
MEP Upgrades and Remodel
3848 HARRISON BLVD.
OGDEN, UTAH 84401

Issued

No.	Date	Description
1	01.16.15	DFCM PLAN REVIEW
2	02.03.15	BID SET

Revision

No.	Date	Description

DFCM Project No. 14031810
SAA Project No. 214016

Drawing Title

MECHANICAL DETAILS

Sheet Number

ME502

DFCM approval

CONDENSATE PIPE SIZING	
TONNAGE RANGE	PIPE SIZE
0-20	3/4"
20-40	1"
40-90	1-1/4"
90-125	1-1/2"
125-250	2"

C2 CONDENSATE PIPE SIZING SCHEDULE

SCALE: NONE

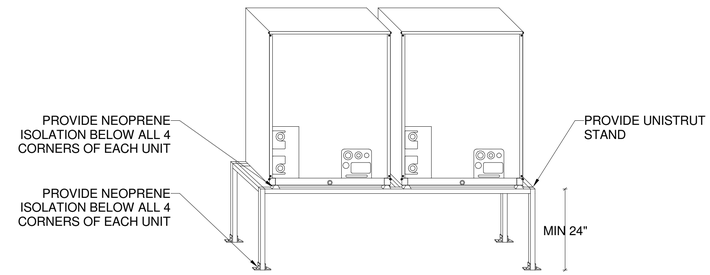

C4 VRF OUTDOOR UNIT SUPPORT DETAIL

SCALE: NONE

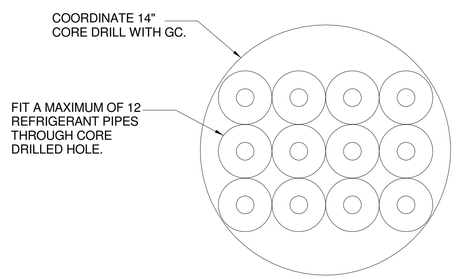

B2 REFRIGERANT PIPING THROUGH CONCRETE WALL DETAIL

SCALE: NONE

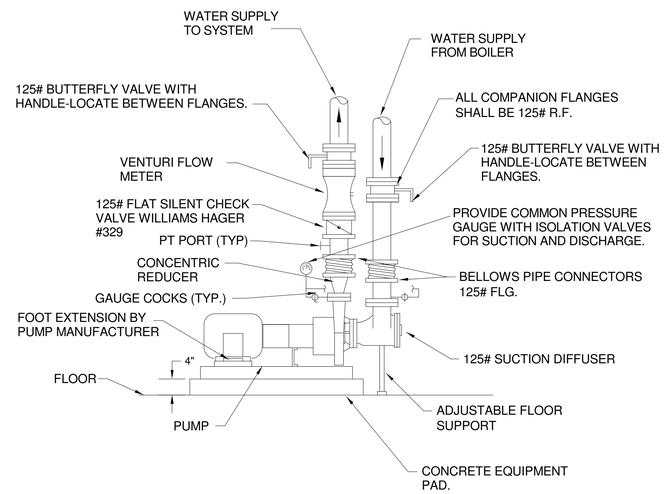

B4 BASE MTD. PUMP PIPING DETAIL

SCALE: NONE

SANDERS ASSOCIATES ARCHITECTS
2668 Grant Avenue
Ogden, UT 84401
P.: 801.621.7303
www.sandersarch.com

Seal

PROFESSIONAL ENGINEER 01.16.15 WINWARD M. PACKER No. 375080 STATE OF UTAH

Consultant

Project Name

WSU- MILLER ADMINISTRATION

MEP Upgrades and Remodel

3848 HARRISON BLVD.
OGDEN, UTAH 84401

Issued

No.	Date	Description
1	01.16.15	DFCM PLAN REVIEW
2	02.03.15	BID SET

Revision

No.	Date	Description

DFCM Project No. 14031810

SAA Project No. 214016

Drawing Title

MECHANICAL DETAILS

Sheet Number

ME503

DFCM approval

ENERGY RECOVERY VENTILATOR SCHEDULE

TAG TYPE	TAG #	AREA SERVED	EXHAUST AIR CFM	EXHAUST AIR ESP	EXHAUST AIR EAT DB	EXHAUST AIR LAT DB	OUTSIDE AIR CFM	OUTSIDE AIR ESP	OUTSIDE AIR EAT DB	OUTSIDE AIR LAT DB	ELECTRICAL VOLTAGE	ELECTRICAL PHASE	ELECTRICAL FREQUENCY	ELECTRICAL MCA	ELECTRICAL MOCP	DIMENSIONS LENGTH	DIMENSIONS WIDTH	DIMENSIONS HEIGHT	OPERATING WEIGHT	MANUF & MODEL	SCHEDULE NOTES
ERV	1	BUILDING VENTILATION	4600 CFM	1.5 in-wg	70 °F	35 °F	5100 CFM	1.5 in-wg	5 °F	35 °F	460 V	3	60 Hz	44.9 A	60 A	116"	96"	90"	2400 lb	RENEWAIRE HE6XIN	1,2,3,4,5,6

1. ALL UNITS OVER 2,000 CFM MUST BE EQUIPPED WITH SMOKE DETECTORS.
2. SEE SPECIFICATIONS FOR OTHER APPROVED MANUFACTURERS.
3. INDOOR ENERGY RECOVERY VENTILATOR WITH SOLID CORE.
4. ERV SHALL BE CONTROLLED AND INTERLOCKED WITH THE VRF SYSTEM.
5. PROVIDE MERV 8 FILTERS.
6. PROVIDE SINGLE POINT POWER CONNECTION WITH FACTORY INSTALLED FUSED DISCONNECT, MOTOR STARTERS, AND MOTORIZED DAMPERS ON OUTSIDE AIR AND EXHAUST AIR.

VRF SCHEDULE - HEAT RECOVERY CONDENSER UNIT

TAG TYPE	TAG #	AREA SERVED	COOLING (BTU/HR)	HEATING (BTU/HR)	ELECTRICAL VOLTAGE	ELECTRICAL PHASE	ELECTRICAL FREQUENCY	MODULE 1 MCA	MODULE 1 MOCP	MODULE 2 MCA	MODULE 2 MOCP	CONDENSER WATER GPM	CONDENSER WATER PRESSURE DROP (FT)	EER	OPERATING WEIGHT	MANUF & MODEL	SCHEDULE NOTES
HP	1	1ST LEVEL NW	192000 Btu/h	214000 Btu/h	460 V	3	60 Hz	11 A	15 A	11 A	15 A	50 GPM	6	10	900 lb	MITSUBISHI PQHY--P192YSHMU-A	1,2,3,4,5
HP	2	1ST LEVEL SE	192000 Btu/h	214000 Btu/h	460 V	3	60 Hz	11 A	15 A	11 A	15 A	50 GPM	6	10	900 lb	MITSUBISHI PQHY--P192YSHMU-A	1,2,3,4,5
HP	3	2ND LEVEL NW	240000 Btu/h	270000 Btu/h	460 V	3	60 Hz	14 A	20 A	14 A	20 A	50 GPM	6	10	900 lb	MITSUBISHI PQHY--P240TSHMU	1,2,3,4,5
HP	4	2ND LEVEL SE	240000 Btu/h	270000 Btu/h	460 V	3	60 Hz	14 A	20 A	14 A	20 A	50 GPM	6	10	900 lb	MITSUBISHI PQHY--P240TSHMU	1,2,3,4,5
HP	5	3RD LEVEL SE	240000 Btu/h	270000 Btu/h	460 V	3	60 Hz	14 A	20 A	14 A	20 A	50 GPM	6	10	900 lb	MITSUBISHI PQHY--P240TSHMU	1,2,3,4,5
HP	6	3RD LEVEL NW	240000 Btu/h	270000 Btu/h	460 V	3	60 Hz	14 A	20 A	14 A	20 A	50 GPM	6	10	900 lb	MITSUBISHI PQHY--P240TSHMU	1,2,3,4,5

1. REFRIGERANT R-410A.
2. SEE SPECIFICATIONS FOR OTHER APPROVED MANUFACTURERS.
3. PROVIDE WITH CONTROLS SYSTEM, INCLUDING PANEL, SENSORS, PROGRAMMING, GRAPHICS, ETC. AS REQUIRED FOR A COMPLETE AND FUNCTIONING SYSTEM. SYSTEM SHALL BE WEB ENABLED FOR MONITORING AND ADJUSTMENTS. INCLUDE ENABLE/DISABLE OR ERV UNITS.
4. PROVIDE ANY ADDITIONAL PIPING, REFRIGERANT, ETC TO ACCOMMODATE ACTUAL PIPING LENGTHS.
5. WEBER STATE UNIVERSITY'S CAMPUS STANDARD IS MITSUBISHI VRF AND JOHNSON CONTROLS. IF OTHER MANUFACTURERS BID THE VRF EQUIPMENT THE CONTRACTOR IS RESPONSIBLE TO COORDINATE THE NECESSARY ELECTRICAL AND OTHER CHANGES. NO CHANGE ORDERS WILL BE ACCEPTED FROM MODIFICATIONS CREATED FROM USING ANOTHER MANUFACTURER.

PUMP SCHEDULE

TAG TYPE	TAG #	AREA SERVED	PUMP TYPE	GPM	PUMP HEAD	PUMP SUCTION SIZE	PUMP DISCHARGE SIZE	ELECTRICAL VOLTAGE	ELECTRICAL PHASE	ELECTRICAL FREQUENCY	PUMP HP	PUMP SPEED	OPERATING WEIGHT	MANUF & MODEL	SCHEDULE NOTES
P	1	COND LOOP	BASE MOUNTED	300 GPM	45 ftH2O	4"	3"	460 V	3	60 Hz	5 hp	1150	450 lb	B&G 1510 3EB	1,2
P	2	COND LOOP	BASE MOUNTED	300 GPM	45 ftH2O	4"	3"	460 V	3	60 Hz	5 hp	1150	450 lb	B&G 1510 3EB	1,2

1. ADD ALTERNATE #2.
2. COORDINATE WITH ELECTRICAL FOR VFD.

VRF BRANCH CONTROLLER SCHEDULE

TAG TYPE	TAG #	AREA SERVED	ELECTRICAL VOLTAGE	ELECTRICAL PHASE	ELECTRICAL FREQUENCY	FULL LOAD CURRENT	MANUF & MODEL	SCHEDULE NOTES
BC	1A	HP-1 MAIN	208 V	1	60 Hz	1.3 A	MITSUBISHI CMB-P1016NU-GA	1,2
BC	1B	HP-1 SUB	208 V	1	60 Hz	1.2 A	MITSUBISHI CMB-P1016NU-HB	1,2
BC	2A	HP-2 MAIN	208 V	1	60 Hz	1.3 A	MITSUBISHI CMB-P1016NU-GA	1,2
BC	2B	HP-2 SUB	208 V	1	60 Hz	1.2 A	MITSUBISHI CMB-P1016NU-HB	1,2
BC	3A	HP-3 MAIN	208 V	1	60 Hz	1.3 A	MITSUBISHI CMB-P1016NU-GA	1,2
BC	3B	HP-3 SUB	208 V	1	60 Hz	1.2 A	MITSUBISHI CMB-P1016NU-HB	1,2
BC	4A	HP-4 MAIN	208 V	1	60 Hz	1.3 A	MITSUBISHI CMB-P1016NU-GA	1,2
BC	4B	HP-4 SUB	208 V	1	60 Hz	1.2 A	MITSUBISHI CMB-P1016NU-HB	1,2
BC	5A	HP-5 MAIN	208 V	1	60 Hz	1.3 A	MITSUBISHI CMB-P1016NU-GA	1,2
BC	5B	HP-5 SUB	208 V	1	60 Hz	1.2 A	MITSUBISHI CMB-P1016NU-HB	1,2
BC	6A	HP-6 MAIN	208 V	1	60 Hz	1.3 A	MITSUBISHI CMB-P1016NU-GA	1,2
BC	6B	HP-6 SUB	208 V	1	60 Hz	1.2 A	MITSUBISHI CMB-P1016NU-HB	1,2

1. COORDINATE BRANCH CONTROLLER LAYOUT, SIZE, QUANTITY, ETC WITH MANUFACTURER. COORDINATE POWER WITH ELECTRICAL.
2. SEE SPECIFICATIONS FOR APPROVED MANUFACTURERS.

EXHAUST FAN SCHEDULE

TAG TYPE	TAG #	AREA SERVED	CFM	ESP	ELECTRICAL VOLTAGE	ELECTRICAL PHASE	ELECTRICAL FREQUENCY	ELECTRICAL RPM	ELECTRICAL HP	SONES	OPERATING WEIGHT	MANUF & MODEL	SCHEDULE NOTES
EF	1	ELEV EQUIP ROOM	330 CFM	0.30 in-wg	120 V	1	60 Hz	1200	0.17 hp	2.9	40 lb	COOK GN-520	1

1. SHALL BE CONTROLLED OFF OF A THERMOSTAT IN THE ELEVATOR EQUIPMENT ROOM.

DIFFUSER AND GRILLE SCHEDULE

TAG	MAX FLOW	FACE SIZE LENGTH	FACE SIZE WIDTH	NECK SIZE LENGTH/ DIAMETER	NECK SIZE WIDTH	CEILING TYPE	BLOW PATTERN	THROW @ 50 FPM	MAX NC	MANUF & MODEL	SCHEDULE NOTES
D-1	200 CFM	24"	24"	6"	0"	LAY-IN	4 WAY	8'	25	PRICE SPD	
D-2	325 CFM	24"	24"	8"	0"	LAY-IN	4 WAY	10'	25	PRICE SPD	
D-3	450 CFM	24"	24"	10"	0"	LAY-IN	4 WAY	11'	25	PRICE SPD	
D-4	600 CFM	24"	24"	12"	0"	LAY-IN	4 WAY	13'	25	PRICE SPD	
D-5	450 CFM	12"	12"	10"	0"	HARD	4 WAY	11'	25	PRICE SPD	
D-6	260 CFM	24"	6"	8"	0"	LAY-IN	1 WAY	0'	20	PRICE AS	1
EG-1	375 CFM	12"	12"	12"	12"	HARD	N/A	0'	25	PRICE 535	
EG-2	1200 CFM	24"	24"	24"	24"	HARD	N/A	0'	25	PRICE 535	
EG-3	600 CFM	24"	24"	12"	12"	LAY-IN	N/A	0'	25	PRICE 535	
EG-4	1200 CFM	24"	24"	24"	24"	LAY-IN	N/A	0'	25	PRICE 535	
R-1	600 CFM	24"	12"	24"	12"	LAY-IN	N/A	0'	25	PRICE 535	
R-2	1200 CFM	24"	24"	24"	24"	LAY-IN	N/A	0'	25	PRICE 535	
R-3	600 CFM	12"	24"	12"	24"	HARD	N/A	0'	25	PRICE 535	
R-4	1200 CFM	24"	24"	24"	24"	HARD	N/A	0'	25	PRICE 535	
R-5	1200 CFM	12"	12"	12"	12"	HARD	N/A	0'	25	PRICE 535	
TG-1	1200 CFM	24"	24"	24"	24"	HARD	N/A	0'	25	PRICE 535	

1. PROVIDE (2) 1.5" SLOTS. PROVIDE PRE-ENGINEERED PLUNUM BOX. PROVIDE FRAME FOR LAY-IN GRID.

PENTHOUSE SCHEDULE

TAG	MAX FLOW	OVERALL DIMENSION LENGTH	OVERALL DIMENSION WIDTH	OVERALL DIMENSION HEIGHT	THROAT SIZE LENGTH	THROAT SIZE WIDTH	MAX NC	FREE AREA	VELOCITY	MANUF & MODEL	SCHEDULE NOTES
PH-1	5200 CFM	64"	52"	2' - 6"	48"	36"	25	12 ft²	500 ft/min	RUSKIN PH811	1

1. PROVIDE INSECT SCREEN.

SANDERS ASSOCIATES ARCHITECTS
2668 Grant Avenue
Ogden, UT 84401
P : 801.621.7303
www.sandersarch.com

Seal

PROFESSIONAL ENGINEER 01.16.15 WINWARD M. PACKER No. 375080 STATE OF UTAH

Consultant

Project Name

WSU- MILLER ADMINISTRATION
MEP Upgrades and Remodel
3848 HARRISON BLVD.
OGDEN, UTAH 84401

Issued

No.	Date	Description
1	01.16.15	DFCM PLAN REVIEW
2	02.03.15	BID SET

Revision

No.	Date	Description

DFCM Project No. 14031810
SAA Project No. 214016

Drawing Title

MECHANICAL SCHEDULES

Sheet Number

ME601

DFCM approval

VRF SCHEDULE - INDOOR UNIT

TAG TYPE	TAG #	AREA SERVED	HEAT PUMP	TYPE	CFM	CFM (OUTSIDE AIR)	ESP	COOLING (BTU/HR)	HEATING (BTU/HR)	ELECTRICAL V	ELECTRICAL PH	ELECTRICAL FREQ	ELECTRICAL FLA	OPER. WT	MANUF & MODEL	SCH NOTES
VRF	100	CORRIDIOR 100	2	DUCTED - HIGH STATIC	1300 CFM	80 CFM	0.6 in-wg	48000 Btu/h	54000 Btu/h	208 V	1	60 Hz	3.7 A	155 lb	MITSUBISHI PEFY-P48NMH	1,2,3,4, 5,6,7
VRF	101	RECEPTION 101	2	CEILING CASSETTE	350 CFM	60 CFM	0 in-wg	8000 Btu/h	9000 Btu/h	208 V	1	60 Hz	0.2 A	45 lb	MITSUBISHI PLFY-P08NCM	1,2,3,4, 5,6,7
VRF	101A	OFFICE 101A	2	CEILING CASSETTE	390 CFM	60 CFM	0 in-wg	12000 Btu/h	13500 Btu/h	208 V	1	60 Hz	0.3 A	45 lb	MITSUBISHI PLFY-P12NCM	1,2,3,4, 5,6,7
VRF	102.1	RECEPTION 102	2	CEILING CASSETTE	350 CFM	30 CFM	0 in-wg	8000 Btu/h	9000 Btu/h	208 V	1	60 Hz	0.2 A	45 lb	MITSUBISHI PLFY-P08NCM	1,2,3,4, 5,6,7
VRF	102.2	RECEPTION 102	2	CEILING CASSETTE	350 CFM	40 CFM	0 in-wg	8000 Btu/h	9000 Btu/h	208 V	1	60 Hz	0.2 A	45 lb	MITSUBISHI PLFY-P08NCM	1,2,3,4, 5,6,7
VRF	102A	OFFICE 102A	2	CEILING CASSETTE	390 CFM	20 CFM	0 in-wg	12000 Btu/h	13500 Btu/h	208 V	1	60 Hz	0.3 A	45 lb	MITSUBISHI PLFY-P12NCM	1,2,3,4, 5,6,7
VRF	102C	OFFICE 102C	2	CEILING CASSETTE	350 CFM	10 CFM	0 in-wg	8000 Btu/h	9000 Btu/h	208 V	1	60 Hz	0.2 A	45 lb	MITSUBISHI PLFY-P08NCM	1,2,3,4, 5,6,7
VRF	102D	OFFICE 102D	2	CEILING CASSETTE	350 CFM	10 CFM	0 in-wg	8000 Btu/h	9000 Btu/h	208 V	1	60 Hz	0.2 A	45 lb	MITSUBISHI PLFY-P08NCM	1,2,3,4, 5,6,7
VRF	102E	OFFICE 102E	2	CEILING CASSETTE	350 CFM	10 CFM	0 in-wg	8000 Btu/h	9000 Btu/h	208 V	1	60 Hz	0.2 A	45 lb	MITSUBISHI PLFY-P08NCM	1,2,3,4, 5,6,7
VRF	102F	WORKROOM 102F	2	CEILING CASSETTE	390 CFM	55 CFM	0 in-wg	12000 Btu/h	13500 Btu/h	208 V	1	60 Hz	0.3 A	45 lb	MITSUBISHI PLFY-P12NCM	1,2,3,4, 5,6,7
VRF	102G	OFFICE 102G	2	CEILING CASSETTE	350 CFM	10 CFM	0 in-wg	8000 Btu/h	9000 Btu/h	208 V	1	60 Hz	0.2 A	45 lb	MITSUBISHI PLFY-P08NCM	1,2,3,4, 5,6,7
VRF	102H	OFFICE 102H	2	CEILING CASSETTE	350 CFM	10 CFM	0 in-wg	8000 Btu/h	9000 Btu/h	208 V	1	60 Hz	0.2 A	45 lb	MITSUBISHI PLFY-P08NCM	1,2,3,4, 5,6,7
VRF	103	1ST LEVEL SE	2	DUCTED - HIGH STATIC	680 CFM	225 CFM	0.6 in-wg	24000 Btu/h	27000 Btu/h	208 V	1	60 Hz	1.4 A	100 lb	MITSUBISHI PEFY-P24NMH	1,2,3,4, 5,6,7
VRF	103A	OFFICE 103A	2	CEILING CASSETTE	350 CFM	15 CFM	0 in-wg	8000 Btu/h	9000 Btu/h	208 V	1	60 Hz	0.2 A	45 lb	MITSUBISHI PLFY-P08NCM	1,2,3,4, 5,6,7
VRF	103B	OFFICE 103B	2	CEILING CASSETTE	350 CFM	10 CFM	0 in-wg	8000 Btu/h	9000 Btu/h	208 V	1	60 Hz	0.2 A	45 lb	MITSUBISHI PLFY-P08NCM	1,2,3,4, 5,6,7
VRF	103C	OFFICE 103C	2	CEILING CASSETTE	350 CFM	10 CFM	0 in-wg	8000 Btu/h	9000 Btu/h	208 V	1	60 Hz	0.2 A	45 lb	MITSUBISHI PLFY-P08NCM	1,2,3,4, 5,6,7
VRF	103D	OFFICE 103D	2	CEILING CASSETTE	350 CFM	15 CFM	0 in-wg	8000 Btu/h	9000 Btu/h	208 V	1	60 Hz	0.2 A	45 lb	MITSUBISHI PLFY-P08NCM	1,2,3,4, 5,6,7
VRF	103E	OFFICE 103E	2	CEILING CASSETTE	350 CFM	15 CFM	0 in-wg	8000 Btu/h	9000 Btu/h	208 V	1	60 Hz	0.2 A	45 lb	MITSUBISHI PLFY-P08NCM	1,2,3,4, 5,6,7
VRF	103G	OFFICE 103G	1	CEILING CASSETTE	350 CFM	10 CFM	0 in-wg	8000 Btu/h	9000 Btu/h	208 V	1	60 Hz	0.2 A	45 lb	MITSUBISHI PLFY-P08NCM	1,2,3,4, 5,6,7
VRF	103H	OFFICE 103H	1	CEILING CASSETTE	350 CFM	10 CFM	0 in-wg	8000 Btu/h	9000 Btu/h	208 V	1	60 Hz	0.2 A	45 lb	MITSUBISHI PLFY-P08NCM	1,2,3,4, 5,6,7
VRF	103J	OFFICE 103J	1	CEILING CASSETTE	350 CFM	10 CFM	0 in-wg	8000 Btu/h	9000 Btu/h	208 V	1	60 Hz	0.2 A	45 lb	MITSUBISHI PLFY-P08NCM	1,2,3,4, 5,6,7
VRF	103K	CONFERENCE 103K	1	CEILING CASSETTE	390 CFM	50 CFM	0 in-wg	15000 Btu/h	17000 Btu/h	208 V	1	60 Hz	0.3 A	45 lb	MITSUBISHI PLFY-P15NCM	1,2,3,4, 5,6,7
VRF	104	LOUNGE 104	1	CEILING CASSETTE	350 CFM	60 CFM	0 in-wg	8000 Btu/h	9000 Btu/h	208 V	1	60 Hz	0.2 A	45 lb	MITSUBISHI PLFY-P08NCM	1,2,3,4, 5,6,7
VRF	104B	CUSTODIAL 104B	1	WALL MOUNTED	210 CFM	10 CFM	0 in-wg	8000 Btu/h	9000 Btu/h	208 V	1	60 Hz	0.2 A	25 lb	MITSUBISHI PKFY-P08NBM	1,2,3,4, 5,6,7
VRF	104D	ELECTRICAL 104D	1	WALL MOUNTED	210 CFM	10 CFM	0 in-wg	8000 Btu/h	9000 Btu/h	208 V	1	60 Hz	0.2 A	25 lb	MITSUBISHI PKFY-P08NBM	1,2,3,4, 5,6,7
VRF	105	LOUNGE-WOMEN 105	1	CEILING CASSETTE	350 CFM	15 CFM	0 in-wg	8000 Btu/h	9000 Btu/h	208 V	1	60 Hz	0.2 A	45 lb	MITSUBISHI PLFY-P08NCM	1,2,3,4, 5,6,7
VRF	107	WOMEN 107	1	CEILING CASSETTE	350 CFM	20 CFM	0 in-wg	8000 Btu/h	9000 Btu/h	208 V	1	60 Hz	0.2 A	45 lb	MITSUBISHI PLFY-P08NCM	1,2,3,4, 5,6,7
VRF	109	MEN 109	1	CEILING CASSETTE	350 CFM	20 CFM	0 in-wg	8000 Btu/h	9000 Btu/h	208 V	1	60 Hz	0.2 A	45 lb	MITSUBISHI PLFY-P08NCM	1,2,3,4, 5,6,7
VRF	110	RECEPTION 110	1	DUCTED - HIGH STATIC	500 CFM	145 CFM	0.6 in-wg	15000 Btu/h	17000 Btu/h	208 V	1	60 Hz	1.1 A	100 lb	MITSUBISHI PEFY-P15NMH	1,2,3,4, 5,6,7
VRF	110A	OFFICE 110A	1	CEILING CASSETTE	350 CFM	20 CFM	0 in-wg	8000 Btu/h	9000 Btu/h	208 V	1	60 Hz	0.2 A	45 lb	MITSUBISHI PLFY-P08NCM	1,2,3,4, 5,6,7
VRF	110B	OFFICE 110B	1	CEILING CASSETTE	350 CFM	10 CFM	0 in-wg	8000 Btu/h	9000 Btu/h	208 V	1	60 Hz	0.2 A	45 lb	MITSUBISHI PLFY-P08NCM	1,2,3,4, 5,6,7
VRF	110C	OFFICE 110C	1	CEILING CASSETTE	350 CFM	10 CFM	0 in-wg	8000 Btu/h	9000 Btu/h	208 V	1	60 Hz	0.2 A	45 lb	MITSUBISHI PLFY-P08NCM	1,2,3,4, 5,6,7
VRF	110D	OFFICE 110D	1	CEILING CASSETTE	350 CFM	15 CFM	0 in-wg	8000 Btu/h	9000 Btu/h	208 V	1	60 Hz	0.2 A	45 lb	MITSUBISHI PLFY-P08NCM	1,2,3,4, 5,6,7
VRF	110E	OFFICE 110E	1	CEILING CASSETTE	350 CFM	10 CFM	0 in-wg	8000 Btu/h	9000 Btu/h	208 V	1	60 Hz	0.2 A	45 lb	MITSUBISHI PLFY-P08NCM	1,2,3,4, 5,6,7
VRF	110F	OFFICE 110F	1	CEILING CASSETTE	350 CFM	10 CFM	0 in-wg	8000 Btu/h	9000 Btu/h	208 V	1	60 Hz	0.2 A	45 lb	MITSUBISHI PLFY-P08NCM	1,2,3,4, 5,6,7
VRF	110G	OFFICE 110G	1	CEILING CASSETTE	350 CFM	10 CFM	0 in-wg	8000 Btu/h	9000 Btu/h	208 V	1	60 Hz	0.2 A	45 lb	MITSUBISHI PLFY-P08NCM	1,2,3,4, 5,6,7
VRF	111	RECEPTION 111	1	DUCTED - HIGH STATIC	680 CFM	195 CFM	0.6 in-wg	24000 Btu/h	27000 Btu/h	208 V	1	60 Hz	1.4 A	100 lb	MITSUBISHI PEFY-P24NMH	1,2,3,4, 5,6,7
VRF	111A	OFFICE 111A	1	CEILING CASSETTE	350 CFM	15 CFM	0 in-wg	8000 Btu/h	9000 Btu/h	208 V	1	60 Hz	0.2 A	45 lb	MITSUBISHI PLFY-P08NCM	1,2,3,4, 5,6,7
VRF	111C	OFFICE 111C	1	CEILING CASSETTE	350 CFM	15 CFM	0 in-wg	8000 Btu/h	9000 Btu/h	208 V	1	60 Hz	0.2 A	45 lb	MITSUBISHI PLFY-P08NCM	1,2,3,4, 5,6,7
VRF	111D	OFFICE 111D	1	CEILING CASSETTE	350 CFM	15 CFM	0 in-wg	8000 Btu/h	9000 Btu/h	208 V	1	60 Hz	0.2 A	45 lb	MITSUBISHI PLFY-P08NCM	1,2,3,4, 5,6,7
VRF	111F	OFFICE 111F	1	CEILING CASSETTE	350 CFM	15 CFM	0 in-wg	8000 Btu/h	9000 Btu/h	208 V	1	60 Hz	0.2 A	45 lb	MITSUBISHI PLFY-P08NCM	1,2,3,4, 5,6,7
VRF	111G	OFFICE 111G	1	CEILING CASSETTE	350 CFM	15 CFM	0 in-wg	8000 Btu/h	9000 Btu/h	208 V	1	60 Hz	0.2 A	45 lb	MITSUBISHI PLFY-P08NCM	1,2,3,4, 5,6,7
VRF	111H	OFFICE 111H	1	CEILING CASSETTE	390 CFM	15 CFM	0 in-wg	12000 Btu/h	13500 Btu/h	208 V	1	60 Hz	0.3 A	45 lb	MITSUBISHI PLFY-P12NCM	1,2,3,4, 5,6,7
VRF	111J	OFFICE 111J	2	CEILING CASSETTE	390 CFM	15 CFM	0 in-wg	12000 Btu/h	13500 Btu/h	208 V	1	60 Hz	0.3 A	45 lb	MITSUBISHI PLFY-P12NCM	1,2,3,4, 5,6,7
VRF	111K	OFFICE 111K	2	CEILING CASSETTE	350 CFM	10 CFM	0 in-wg	8000 Btu/h	9000 Btu/h	208 V	1	60 Hz	0.2 A	45 lb	MITSUBISHI PLFY-P08NCM	1,2,3,4, 5,6,7
VRF	113	MECHANICAL 113	2	CEILING CASSETTE	350 CFM	20 CFM	0 in-wg	8000 Btu/h	9000 Btu/h	208 V	1	60 Hz	0.2 A	45 lb	MITSUBISHI PLFY-P08NCM	1,2,3,4, 5,6,7
VRF	113A	MECHANICAL 113A	2	CEILING CASSETTE	390 CFM	20 CFM	0 in-wg	12000 Btu/h	13500 Btu/h	208 V	1	60 Hz	0.3 A	45 lb	MITSUBISHI PLFY-P12NCM	1,2,3,4, 5,6,7
VRF	202	FOYER 202	3	DUCTED - HIGH STATIC	1300 CFM	225 CFM	0.6 in-wg	36000 Btu/h	40000 Btu/h	208 V	1	60 Hz	3.7 A	155 lb	MITSUBISHI PEFY-P36NMH	1,2,3,4, 5,6,7
VRF	204	RECEPTION 204	2 SOUTHEAST	CEILING CASSETTE	390 CFM	65 CFM	0 in-wg	15000 Btu/h	17000 Btu/h	208 V	1	60 Hz	0.3 A	45 lb	MITSUBISHI PLFY-P15NCM	1,2,3,4, 5,6,7

VRF SCHEDULE - INDOOR UNIT

TAG TYPE	TAG #	AREA SERVED	HEAT PUMP	TYPE	CFM	CFM (OUTSIDE AIR)	ESP	COOLING (BTU/HR)	HEATING (BTU/HR)	ELECTRICAL V	ELECTRICAL PH	ELECTRICAL FREQ	ELECTRICAL FLA	OPER. WT	MANUF & MODEL	SCH NOTES
VRF	204A	OFFICE 204A	2 SOUTHEAST	CEILING CASSETTE	350 CFM	20 CFM	0 in-wg	8000 Btu/h	9000 Btu/h	208 V	1	60 Hz	0.2 A	45 lb	MITSUBISHI PLFY-P08NCM	1,2,3,4, 5,6,7
VRF	204B	OFFICE 204B	2 SOUTHEAST	CEILING CASSETTE	350 CFM	20 CFM	0 in-wg	8000 Btu/h	9000 Btu/h	208 V	1	60 Hz	0.2 A	45 lb	MITSUBISHI PLFY-P08NCM	1,2,3,4, 5,6,7
VRF	204C	OFFICE 204C	2 SOUTHEAST	CEILING CASSETTE	350 CFM	20 CFM	0 in-wg	8000 Btu/h	9000 Btu/h	208 V	1	60 Hz	0.2 A	45 lb	MITSUBISHI PLFY-P08NCM	1,2,3,4, 5,6,7
VRF	204D	OFFICE 204D	2 SOUTHEAST	CEILING CASSETTE	350 CFM	20 CFM	0 in-wg	8000 Btu/h	9000 Btu/h	208 V	1	60 Hz	0.2 A	45 lb	MITSUBISHI PLFY-P08NCM	1,2,3,4, 5,6,7
VRF	204E	OFFICE 204E	2 SOUTHEAST	CEILING CASSETTE	350 CFM	20 CFM	0 in-wg	8000 Btu/h	9000 Btu/h	208 V	1	60 Hz	0.2 A	45 lb	MITSUBISHI PLFY-P08NCM	1,2,3,4, 5,6,7
VRF	204F	OFFICE 204F	2 SOUTHEAST	CEILING CASSETTE	390 CFM	20 CFM	0 in-wg	12000 Btu/h	13500 Btu/h	208 V	1	60 Hz	0.3 A	45 lb	MITSUBISHI PLFY-P12NCM	1,2,3,4, 5,6,7
VRF	204G	OFFICE 204G	2 SOUTHEAST	CEILING CASSETTE	565 CFM	20 CFM	0 in-wg	15000 Btu/h	17000 Btu/h	208 V	1	60 Hz	0.3 A	60 lb	MITSUBISHI PLFY-P15NBM	1,2,3,4, 5,6,7
VRF	204J	OFFICE 204J	2 SOUTHEAST	CEILING CASSETTE	350 CFM	20 CFM	0 in-wg	8000 Btu/h	9000 Btu/h	208 V	1	60 Hz	0.2 A	45 lb	MITSUBISHI PLFY-P08NCM	1,2,3,4, 5,6,7
VRF	204K	CONFERENCE 204K	2 SOUTHEAST	CEILING CASSETTE	390 CFM	65 CFM	0 in-wg	15000 Btu/h	17000 Btu/h	208 V	1	60 Hz	0.3 A	45 lb	MITSUBISHI PLFY-P15NCM	1,2,3,4, 5,6,7
VRF	204M	OFFICE 204M	2 SOUTHEAST	CEILING CASSETTE	350 CFM	20 CFM	0 in-wg	8000 Btu/h	9000 Btu/h	208 V	1	60 Hz	0.2 A	45 lb	MITSUBISHI PLFY-P08NCM	1,2,3,4, 5,6,7
VRF	204N	OFFICE 204N	2 SOUTHEAST	CEILING CASSETTE	565 CFM	20 CFM	0 in-wg	15000 Btu/h	17000 Btu/h	208 V	1	60 Hz	0.3 A	60 lb	MITSUBISHI PLFY-P15NBM	1,2,3,4, 5,6,7
VRF	204P	OFFICE 204P	2 SOUTHEAST	CEILING CASSETTE	565 CFM	20 CFM	0 in-wg	15000 Btu/h	17000 Btu/h	208 V	1	60 Hz	0.3 A	60 lb	MITSUBISHI PLFY-P15NBM	1,2,3,4, 5,6,7
VRF	204Q	OFFICE 204Q	2 SOUTHEAST	CEILING CASSETTE	350 CFM	20 CFM	0 in-wg	8000 Btu/h	9000 Btu/h	208 V	1	60 Hz	0.2 A	45 lb	MITSUBISHI PLFY-P08NCM	1,2,3,4, 5,6,7
VRF	204R	OFFICE 204R	2 SOUTHEAST	CEILING CASSETTE	350 CFM	20 CFM	0 in-wg	8000 Btu/h	9000 Btu/h	208 V	1	60 Hz	0.2 A	45 lb	MITSUBISHI PLFY-P08NCM	1,2,3,4, 5,6,7
VRF	204S	WORKROOM 204S	2 NORTHWEST	CEILING CASSETTE	350 CFM	20 CFM	0 in-wg	8000 Btu/h	9000 Btu/h	208 V	1	60 Hz	0.2 A	45 lb	MITSUBISHI PLFY-P08NCM	1,2,3,4, 5,6,7
VRF	206	WOMEN 206	2 SOUTHEAST	CEILING CASSETTE	350 CFM	0 CFM	0 in-wg	8000 Btu/h	9000 Btu/h	208 V	1	60 Hz	0.2 A	45 lb	MITSUBISHI PLFY-P08NCM	1,2,3,4, 5,6,7
VRF	207	RECEPTION 207	2 NORTHWEST	CEILING CASSETTE	350 CFM	125 CFM	0 in-wg	8000 Btu/h	9000 Btu/h	208 V	1	60 Hz	0.2 A	45 lb	MITSUBISHI PLFY-P08NCM	1,2,3,4, 5,6,7
VRF	207A	CONFERENCE 207A	2 NORTHWEST	CEILING CASSETTE	390 CFM	60 CFM	0 in-wg	15000 Btu/h	17000 Btu/h	208 V	1	60 Hz	0.3 A	45 lb	MITSUBISHI PLFY-P15NCM	1,2,3,4, 5,6,7
VRF	207B	OFFICE SUITE 207B	2 SOUTHEAST	DUCTED - HIGH STATIC	1400 CFM	115 CFM	0.6 in-wg	54000 Btu/h	60000 Btu/h	208 V	1	60 Hz	3.8 A	155 lb	MITSUBISHI PEFY-P54NMH	1,2,3,4, 5,6,7
VRF	207C	OFFICE 207C	2 NORTHWEST	CEILING CASSETTE	565 CFM	20 CFM	0 in-wg	15000 Btu/h	17000 Btu/h	208 V	1	60 Hz	0.3 A	60 lb	MITSUBISHI PLFY-P15NBM	1,2,3,4, 5,6,7
VRF	207D	OFFICE 207D	2 NORTHWEST	CEILING CASSETTE	350 CFM	20 CFM	0 in-wg	8000 Btu/h	9000 Btu/h	208 V	1	60 Hz	0.2 A	45 lb	MITSUBISHI PLFY-P08NCM	1,2,3,4, 5,6,7
VRF	207E	OFFICE 207E	2 NORTHWEST	CEILING CASSETTE	350 CFM	20 CFM	0 in-wg	8000 Btu/h	9000 Btu/h	208 V	1	60 Hz	0.2 A	45 lb	MITSUBISHI PLFY-P08NCM	1,2,3,4, 5,6,7
VRF	207F	OFFICE 207F	2 NORTHWEST	CEILING CASSETTE	350 CFM	20 CFM	0 in-wg	8000 Btu/h	9000 Btu/h	208 V	1	60 Hz	0.2 A	45 lb	MITSUBISHI PLFY-P08NCM	1,2,3,4, 5,6,7
VRF	209	FOYER 209	2 NORTHWEST	DUCTED - HIGH STATIC	1300 CFM	225 CFM	0.6 in-wg	48000 Btu/h	54000 Btu/h	208 V	1	60 Hz	3.7 A	155 lb	MITSUBISHI PEFY-P48NMH	1,2,3,4, 5,6,7
VRF	210	RECEPTION 210	1 SOUTHEAST	CEILING CASSETTE	390 CFM	60 CFM	0 in-wg	12000 Btu/h	13500 Btu/h	208 V	1	60 Hz	0.3 A	45 lb	MITSUBISHI PLFY-P12NCM	1,2,3,4, 5,6,7
VRF	210A	WORKROOM 210A	2 NORTHWEST	CEILING CASSETTE	350 CFM	60 CFM	0 in-wg	8000 Btu/h	9000 Btu/h	208 V	1	60 Hz	0.2 A	45 lb	MITSUBISHI PLFY-P08NCM	1,2,3,4, 5,6,7
VRF	210B	OFFICE 210B	2 NORTHWEST	CEILING CASSETTE	390 CFM	20 CFM	0 in-wg	15000 Btu/h	17000 Btu/h	208 V	1	60 Hz	0.3 A	45 lb	MITSUBISHI PLFY-P15NCM	1,2,3,4, 5,6,7
VRF	210C	OFFICE 210C	2 NORTHWEST	CEILING CASSETTE	390 CFM	20 CFM	0 in-wg	12000 Btu/h	13500 Btu/h	208 V	1	60 Hz	0.3 A	45 lb	MITSUBISHI PLFY-P12NCM	1,2,3,4, 5,6,7
VRF	210D	OFFICE 210D	2 NORTHWEST	CEILING CASSETTE	390 CFM	20 CFM	0 in-wg	12000 Btu/h	13500 Btu/h	208 V	1	60 Hz	0.3 A	45 lb	MITSUBISHI PLFY-P12NCM	1,2,3,4, 5,6,7
VRF	210E	OFFICE 210E	2 NORTHWEST	CEILING CASSETTE	350 CFM	20 CFM	0 in-wg	8000 Btu/h	9000 Btu/h	208 V	1	60 Hz	0.2 A	45 lb	MITSUBISHI PLFY-P08NCM	1,2,3,4, 5,6,7
VRF	210F	OFFICE 210F	2 NORTHWEST	CEILING CASSETTE	390 CFM	20 CFM	0 in-wg	12000 Btu/h	13500 Btu/h	208 V	1	60 Hz	0.3 A	45 lb	MITSUBISHI PLFY-P12NCM	1,2,3,4, 5,6,7
VRF	210G	OFFICE 210G	2 NORTHWEST	CEILING CASSETTE	390 CFM	20 CFM	0 in-wg	12000 Btu/h	13500 Btu/h	208 V	1	60 Hz	0.3 A	45 lb	MITSUBISHI PLFY-P12NCM	1,2,3,4, 5,6,7
VRF	210H	WORKROOM 210H	2 NORTHWEST	CEILING CASSETTE	350 CFM	50 CFM	0 in-wg	8000 Btu/h	9000 Btu/h	208 V	1	60 Hz	0.2 A	45 lb	MITSUBISHI PLFY-P08NCM	1,2,3,4, 5,6,7
VRF	210J	OFFICE 210J	2 NORTHWEST	CEILING CASSETTE	390 CFM	20 CFM	0 in-wg	12000 Btu/h	13500 Btu/h	208 V	1	60 Hz	0.3 A	45 lb	MITSUBISHI PLFY-P12NCM	1,2,3,4, 5,6,7
VRF	210K	OFFICE 210K	2 NORTHWEST	CEILING CASSETTE	350 CFM	20 CFM	0 in-wg	8000 Btu/h	9000 Btu/h	208 V	1	60 Hz	0.2 A	45 lb	MITSUBISHI PLFY-P08NCM	1,2,3,4, 5,6,7
VRF	211	CORRIDOR 211	2 NORTHWEST	CEILING CASSETTE	350 CFM	0 CFM	0 in-wg	8000 Btu/h	9000 Btu/h	208 V	1	60 Hz	0.2 A	45 lb	MITSUBISHI PLFY-P08NCM	1,2,3,4, 5,6,7
VRF	211C	OFFICE 211C	2 NORTHWEST	CEILING CASSETTE	350 CFM	20 CFM	0 in-wg	8000 Btu/h	9000 Btu/h	208 V	1	60 Hz	0.2 A	45 lb	MITSUBISHI PLFY-P08NCM	1,2,3,4, 5,6,7
VRF	211E	OFFICE 211E	2 NORTHWEST	CEILING CASSETTE	390 CFM	20 CFM	0 in-wg	12000 Btu/h	13500 Btu/h	208 V	1	60 Hz	0.3 A	45 lb	MITSUBISHI PLFY-P12NCM	1,2,3,4, 5,6,7
VRF	211F	OFFICE 211F	2 NORTHWEST	CEILING CASSETTE	350 CFM	20 CFM	0 in-wg	8000 Btu/h	9000 Btu/h	208 V	1	60 Hz	0.2 A	45 lb	MITSUBISHI PLFY-P08NCM	1,2,3,4, 5,6,7

1. REFRIGERANT R-410A.
2. SEE SPECIFICATIONS FOR OTHER APPROVED MANUFACTURERS.
3. PROVIDE WITH INTEGRAL PENCIL CONDENSATE PUMP. ROUTE CONDENSATE LINE TO NEAREST FLOOR DRAIN OR FUNNEL DRAIN.
4. PROVIDE WITH INDIVIDUAL ZONE THERMOSTAT.
5. EACH INDIVIDUAL UNIT IS POWERED SEPERATELY.
6. COORDINATE PIPING AND ELECTRICAL CONNECTIONS TO HAVE A MINIMUM OF 36" X 30" CLEARANCE IN FRONT OF ELECTRICAL CONNECTIONS.
7. VARIABLE REFRIGERANT SYSTEM SHALL BE INSTALLED, PIPED, AND CONTROLLED PER MANUFACTURERS RECOMMENDATIONS. SELECTED MANUFACTURER SHALL PROVIDE ALL REQUIRED TRAINING, ONSITE ASSISTANCE, PROJECT SPECIFIC SHOP DRAWINGS, ETC. AS REQUIRED FOR A COMPLETE AND OPERATING SYSTEM.

DFCM approval

SANDERS ASSOCIATES ARCHITECTS
2668 Grant Avenue
Ogden, UT 84401
P : 801.621.7303
www.sandersarch.com

Seal

PROFESSIONAL ENGINEER 01.16.15 WINWARD M. PACKER No. 375080 STATE OF UTAH

Consultant

Project Name

WSU- MILLER ADMINISTRATION
MEP Upgrades and Remodel
3848 HARRISON BLVD.
OGDEN, UTAH 84401

Issued

No.	Date	Description
1	01.16.15	DFCM PLAN REVIEW
2	02.03.15	BID SET

Revision

No.	Date	Description

DFCM Project No. 14031810
SAA Project No. 214016

Drawing Title

MECHANICAL SCHEDULES

Sheet Number

ME602

VRF SCHEDULE - INDOOR UNIT (CONT)

TAG TYPE	TAG #	AREA SERVED	EQUIPMENT SERVED	TYPE	CFM	CFM (OUTSIDE AIR)	ESP	COOLING (BTU/HR)	HEATING (BTU/HR)	ELECTRICAL V	ELECTRICAL PH	ELECTRICAL FREQ	ELECTRICAL FLA	OPER. WT	MANUF & MODEL	SCH NOTES
VRF	211G	OFFICE 211G	2 NORTHWEST	CEILING CASSETTE	390 CFM	20 CFM	0 in-wg	12000 Btu/h	13500 Btu/h	208 V	1	60 Hz	0.3 A	45 lb	MITSUBISHI PLFY-P12NCM	1,2,3,4, 5,6,7
VRF	211H	OFFICE 211H	2 NORTHWEST	CEILING CASSETTE	350 CFM	20 CFM	0 in-wg	8000 Btu/h	9000 Btu/h	208 V	1	60 Hz	0.2 A	45 lb	MITSUBISHI PLFY-P08NCM	1,2,3,4, 5,6,7
VRF	211J	OFFICE 211J	2 NORTHWEST	CEILING CASSETTE	390 CFM	20 CFM	0 in-wg	12000 Btu/h	13500 Btu/h	208 V	1	60 Hz	0.3 A	45 lb	MITSUBISHI PLFY-P12NCM	1,2,3,4, 5,6,7
VRF	211K	CONFERENCE 211K	2 NORTHWEST	CEILING CASSETTE	390 CFM	85 CFM	0 in-wg	15000 Btu/h	17000 Btu/h	208 V	1	60 Hz	0.3 A	45 lb	MITSUBISHI PLFY-P15NCM	1,2,3,4, 5,6,7
VRF	211L	OFFICE 211L	2 NORTHWEST	CEILING CASSETTE	390 CFM	15 CFM	0 in-wg	12000 Btu/h	13500 Btu/h	208 V	1	60 Hz	0.3 A	45 lb	MITSUBISHI PLFY-P12NCM	1,2,3,4, 5,6,7
VRF	212B	CUSTODIAL 212B	2 NORTHWEST	WALL MOUNTED	210 CFM	125 CFM	0 in-wg	6000 Btu/h	6700 Btu/h	208 V	1	60 Hz	0.2 A	25 lb	MITSUBISHI PKFY-P06NBM	1,2,3,4, 5,6,7
VRF	212E	ELECTRICAL 212E	2 SOUTHEAST	WALL MOUNTED	210 CFM	125 CFM	0 in-wg	6000 Btu/h	6700 Btu/h	208 V	1	60 Hz	0.2 A	25 lb	MITSUBISHI PKFY-P06NBM	1,2,3,4, 5,6,7
VRF	213	MEN 213	2 SOUTHEAST	CEILING CASSETTE	350 CFM	0 CFM	0 in-wg	8000 Btu/h	9000 Btu/h	208 V	1	60 Hz	0.2 A	45 lb	MITSUBISHI PLFY-P08NCM	1,2,3,4, 5,6,7
VRF	214	RECEPTION 214	2 SOUTHEAST	CEILING CASSETTE	350 CFM	80 CFM	0 in-wg	8000 Btu/h	9000 Btu/h	208 V	1	60 Hz	0.2 A	45 lb	MITSUBISHI PLFY-P08NCM	1,2,3,4, 5,6,7
VRF	214A	OFFICE 214A	2 SOUTHEAST	CEILING CASSETTE	350 CFM	20 CFM	0 in-wg	8000 Btu/h	9000 Btu/h	208 V	1	60 Hz	0.2 A	45 lb	MITSUBISHI PLFY-P08NCM	1,2,3,4, 5,6,7
VRF	214B	OFFICE 214B	2 SOUTHEAST	CEILING CASSETTE	350 CFM	20 CFM	0 in-wg	8000 Btu/h	9000 Btu/h	208 V	1	60 Hz	0.2 A	45 lb	MITSUBISHI PLFY-P08NCM	1,2,3,4, 5,6,7
VRF	214C	OFFICE 214C	2 SOUTHEAST	CEILING CASSETTE	350 CFM	15 CFM	0 in-wg	8000 Btu/h	9000 Btu/h	208 V	1	60 Hz	0.2 A	45 lb	MITSUBISHI PLFY-P08NCM	1,2,3,4, 5,6,7
VRF	214D	CONFERENCE 214D	2 NORTHWEST	CEILING CASSETTE	390 CFM	50 CFM	0 in-wg	12000 Btu/h	13500 Btu/h	208 V	1	60 Hz	0.3 A	45 lb	MITSUBISHI PLFY-P12NCM	1,2,3,4, 5,6,7
VRF	301	CORRIDOR 301	3 SOUTHEAST	DUCTED - HIGH STATIC	1300 CFM	55 CFM	0.6 in-wg	36000 Btu/h	40000 Btu/h	208 V	1	60 Hz	3.7 A	155 lb	MITSUBISHI PEFY-P36NMH	1,2,3,4, 5,6,7
VRF	302	RECEPTION 302	3 SOUTHEAST	DUCTED - HIGH STATIC	775 CFM	125 CFM	0.6 in-wg	27000 Btu/h	30000 Btu/h	208 V	1	60 Hz	1.5 A	115 lb	MITSUBISHI PEFY-P27NMH	1,2,3,4, 5,6,7
VRF	302A	OFFICE 302A	3 SOUTHEAST	CEILING CASSETTE	700 CFM	100 CFM	0 in-wg	24000 Btu/h	27000 Btu/h	208 V	1	60 Hz	0.4 A	65 lb	MITSUBISHI PLFY-P24NBM	1,2,3,4, 5,6,7
VRF	302B	OFFICE 302B	3 SOUTHEAST	CEILING CASSETTE	350 CFM	15 CFM	0 in-wg	8000 Btu/h	9000 Btu/h	208 V	1	60 Hz	0.2 A	45 lb	MITSUBISHI PLFY-P08NCM	1,2,3,4, 5,6,7
VRF	303	OFFICE 303	3 SOUTHEAST	CEILING CASSETTE	350 CFM	20 CFM	0 in-wg	8000 Btu/h	9000 Btu/h	208 V	1	60 Hz	0.2 A	45 lb	MITSUBISHI PLFY-P08NCM	1,2,3,4, 5,6,7
VRF	303A	OFFICE 303A	3 SOUTHEAST	CEILING CASSETTE	390 CFM	20 CFM	0 in-wg	12000 Btu/h	13500 Btu/h	208 V	1	60 Hz	0.3 A	45 lb	MITSUBISHI PLFY-P12NCM	1,2,3,4, 5,6,7
VRF	304	OFFICE 304	3 SOUTHEAST	CEILING CASSETTE	390 CFM	25 CFM	0 in-wg	15000 Btu/h	17000 Btu/h	208 V	1	60 Hz	0.3 A	45 lb	MITSUBISHI PLFY-P15NCM	1,2,3,4, 5,6,7
VRF	305	MEN 305	3 SOUTHEAST	CEILING CASSETTE	350 CFM	0 CFM	0 in-wg	8000 Btu/h	9000 Btu/h	208 V	1	60 Hz	0.2 A	45 lb	MITSUBISHI PLFY-P08NCM	1,2,3,4, 5,6,7
VRF	306	RECEPTION 306	3 NORTHWEST	DUCTED - HIGH STATIC	680 CFM	215 CFM	0.6 in-wg	24000 Btu/h	27000 Btu/h	208 V	1	60 Hz	1.4 A	100 lb	MITSUBISHI PEFY-P24NMH	1,2,3,4, 5,6,7
VRF	306A	OFFICE 306A	3 SOUTHEAST	CEILING CASSETTE	390 CFM	25 CFM	0 in-wg	15000 Btu/h	17000 Btu/h	208 V	1	60 Hz	0.3 A	45 lb	MITSUBISHI PLFY-P15NCM	1,2,3,4, 5,6,7
VRF	306B	OFFICE 306B	3 SOUTHEAST	CEILING CASSETTE	390 CFM	25 CFM	0 in-wg	15000 Btu/h	17000 Btu/h	208 V	1	60 Hz	0.3 A	45 lb	MITSUBISHI PLFY-P15NCM	1,2,3,4, 5,6,7
VRF	306C	OFFICE 306C	3 SOUTHEAST	CEILING CASSETTE	390 CFM	25 CFM	0 in-wg	15000 Btu/h	17000 Btu/h	208 V	1	60 Hz	0.3 A	45 lb	MITSUBISHI PLFY-P15NCM	1,2,3,4, 5,6,7
VRF	306D	OFFICE 306D	3 NORTHWEST	CEILING CASSETTE	390 CFM	15 CFM	0 in-wg	12000 Btu/h	13500 Btu/h	208 V	1	60 Hz	0.3 A	45 lb	MITSUBISHI PLFY-P12NCM	1,2,3,4, 5,6,7
VRF	306E	OFFICE 306E	3 NORTHWEST	CEILING CASSETTE	390 CFM	20 CFM	0 in-wg	12000 Btu/h	13500 Btu/h	208 V	1	60 Hz	0.3 A	45 lb	MITSUBISHI PLFY-P12NCM	1,2,3,4, 5,6,7
VRF	307	RECEPTION 307	3 NORTHWEST	CEILING CASSETTE	350 CFM	55 CFM	0 in-wg	8000 Btu/h	9000 Btu/h	208 V	1	60 Hz	0.2 A	45 lb	MITSUBISHI PLFY-P08NCM	1,2,3,4, 5,6,7
VRF	307A	OFFICE 307A	3 NORTHWEST	CEILING CASSETTE	390 CFM	20 CFM	0 in-wg	12000 Btu/h	13500 Btu/h	208 V	1	60 Hz	0.3 A	45 lb	MITSUBISHI PLFY-P12NCM	1,2,3,4, 5,6,7
VRF	307B	OFFICE 307B	3 NORTHWEST	CEILING CASSETTE	390 CFM	20 CFM	0 in-wg	12000 Btu/h	13500 Btu/h	208 V	1	60 Hz	0.3 A	45 lb	MITSUBISHI PLFY-P12NCM	1,2,3,4, 5,6,7
VRF	307C	CONFERENCE 307C	3 NORTHWEST	CEILING CASSETTE	390 CFM	60 CFM	0 in-wg	12000 Btu/h	13500 Btu/h	208 V	1	60 Hz	0.3 A	45 lb	MITSUBISHI PLFY-P12NCM	1,2,3,4, 5,6,7
VRF	308	RECEPTION 308	3 NORTHWEST	DUCTED - HIGH STATIC	680 CFM	125 CFM	0.6 in-wg	24000 Btu/h	27000 Btu/h	208 V	1	60 Hz	1.4 A	100 lb	MITSUBISHI PEFY-P24NMH	1,2,3,4, 5,6,7
VRF	308A	OFFICE 308A	3 NORTHWEST	CEILING CASSETTE	390 CFM	25 CFM	0 in-wg	15000 Btu/h	17000 Btu/h	208 V	1	60 Hz	0.3 A	45 lb	MITSUBISHI PLFY-P15NCM	1,2,3,4, 5,6,7
VRF	308B	CONFERENCE ROOM 308B	3 NORTHWEST	CEILING CASSETTE	636 CFM	60 CFM	0 in-wg	18000 Btu/h	20000 Btu/h	208 V	1	60 Hz	0.4 A	65 lb	MITSUBISHI PLFY-P18NBM	1,2,3,4, 5,6,7
VRF	308C	OFFICE 308C	3 NORTHWEST	CEILING CASSETTE	390 CFM	20 CFM	0 in-wg	12000 Btu/h	13500 Btu/h	208 V	1	60 Hz	0.3 A	45 lb	MITSUBISHI PLFY-P12NCM	1,2,3,4, 5,6,7
VRF	308F	OFFICE 308F	3 NORTHWEST	CEILING CASSETTE	390 CFM	20 CFM	0 in-wg	12000 Btu/h	13500 Btu/h	208 V	1	60 Hz	0.3 A	45 lb	MITSUBISHI PLFY-P12NCM	1,2,3,4, 5,6,7
VRF	308G	OFFICE 308G	3 NORTHWEST	CEILING CASSETTE	350 CFM	20 CFM	0 in-wg	8000 Btu/h	9000 Btu/h	208 V	1	60 Hz	0.2 A	45 lb	MITSUBISHI PLFY-P08NCM	1,2,3,4, 5,6,7
VRF	313	RECEPTION 313	3 NORTHWEST	CEILING CASSETTE	700 CFM	40 CFM	0 in-wg	24000 Btu/h	27000 Btu/h	208 V	1	60 Hz	0.4 A	65 lb	MITSUBISHI PLFY-P24NBM	1,2,3,4, 5,6,7
VRF	313A	OFFICE 313A	3 NORTHWEST	CEILING CASSETTE	350 CFM	20 CFM	0 in-wg	8000 Btu/h	9000 Btu/h	208 V	1	60 Hz	0.2 A	45 lb	MITSUBISHI PLFY-P08NCM	1,2,3,4, 5,6,7
VRF	313B	OFFICE 313B	3 NORTHWEST	CEILING CASSETTE	390 CFM	20 CFM	0 in-wg	12000 Btu/h	13500 Btu/h	208 V	1	60 Hz	0.3 A	45 lb	MITSUBISHI PLFY-P12NCM	1,2,3,4, 5,6,7
VRF	313C	OFFICE 313C	3 NORTHWEST	CEILING CASSETTE	390 CFM	20 CFM	0 in-wg	12000 Btu/h	13500 Btu/h	208 V	1	60 Hz	0.3 A	45 lb	MITSUBISHI PLFY-P12NCM	1,2,3,4, 5,6,7
VRF	314B	3RD LEVEL SE	3 NORTHWEST	WALL MOUNTED	210 CFM	125 CFM	0 in-wg	6000 Btu/h	6700 Btu/h	208 V	1	60 Hz	0.2 A	25 lb	MITSUBISHI PKFY-P06NBM	1,2,3,4, 5,6,7
VRF	314E	3RD LEVEL NW	3 SOUTHEAST	WALL MOUNTED	210 CFM	125 CFM	0 in-wg	6000 Btu/h	6700 Btu/h	208 V	1	60 Hz	0.2 A	25 lb	MITSUBISHI PKFY-P06NBM	1,2,3,4, 5,6,7
VRF	315	WOMEN 315	3 SOUTHEAST	CEILING CASSETTE	350 CFM	0 CFM	0 in-wg	8000 Btu/h	9000 Btu/h	208 V	1	60 Hz	0.2 A	45 lb	MITSUBISHI PLFY-P08NCM	1,2,3,4, 5,6,7
VRF	316	RECEPTION 316	3 NORTHWEST	CEILING CASSETTE	390 CFM	115 CFM	0 in-wg	15000 Btu/h	17000 Btu/h	208 V	1	60 Hz	0.3 A	45 lb	MITSUBISHI PLFY-P15NCM	1,2,3,4, 5,6,7
VRF	316A	OFFICE 316A	3 NORTHWEST	CEILING CASSETTE	350 CFM	20 CFM	0 in-wg	8000 Btu/h	9000 Btu/h	208 V	1	60 Hz	0.2 A	45 lb	MITSUBISHI PLFY-P08NCM	1,2,3,4, 5,6,7
VRF	316C	OFFICE 316C	3 NORTHWEST	CEILING CASSETTE	390 CFM	20 CFM	0 in-wg	12000 Btu/h	13500 Btu/h	208 V	1	60 Hz	0.3 A	45 lb	MITSUBISHI PLFY-P12NCM	1,2,3,4, 5,6,7

VRF SCHEDULE - INDOOR UNIT (CONT)

TAG TYPE	TAG #	AREA SERVED	EQUIPMENT SERVED	TYPE	CFM	CFM (OUTSIDE AIR)	ESP	COOLING (BTU/HR)	HEATING (BTU/HR)	ELECTRICAL V	ELECTRICAL PH	ELECTRICAL FREQ	ELECTRICAL FLA	OPER. WT	MANUF & MODEL	SCH NOTES
VRF	316D	OFFICE 316D	3 NORTHWEST	CEILING CASSETTE	390 CFM	20 CFM	0 in-wg	12000 Btu/h	13500 Btu/h	208 V	1	60 Hz	0.3 A	45 lb	MITSUBISHI PLFY-P12NCM	1,2,3,4, 5,6,7
VRF	316E	OFFICE 316E	3 NORTHWEST	CEILING CASSETTE	390 CFM	20 CFM	0 in-wg	12000 Btu/h	13500 Btu/h	208 V	1	60 Hz	0.3 A	45 lb	MITSUBISHI PLFY-P12NCM	1,2,3,4, 5,6,7
VRF	316F	OFFICE 316F	3 NORTHWEST	CEILING CASSETTE	390 CFM	20 CFM	0 in-wg	12000 Btu/h	13500 Btu/h	208 V	1	60 Hz	0.3 A	45 lb	MITSUBISHI PLFY-P12NCM	1,2,3,4, 5,6,7
VRF	316G	OFFICE 316G	3 SOUTHEAST	CEILING CASSETTE	390 CFM	20 CFM	0 in-wg	12000 Btu/h	13500 Btu/h	208 V	1	60 Hz	0.3 A	45 lb	MITSUBISHI PLFY-P12NCM	1,2,3,4, 5,6,7
VRF	316H	PROJECT ROOM 316H	3 SOUTHEAST	CEILING CASSETTE	350 CFM	80 CFM	0 in-wg	8000 Btu/h	9000 Btu/h	208 V	1	60 Hz	0.2 A	45 lb	MITSUBISHI PLFY-P08NCM	1,2,3,4, 5,6,7
VRF	317	OFFICE 317	3 SOUTHEAST	CEILING CASSETTE	350 CFM	20 CFM	0 in-wg	8000 Btu/h	9000 Btu/h	208 V	1	60 Hz	0.2 A	45 lb	MITSUBISHI PLFY-P08NCM	1,2,3,4, 5,6,7
VRF	317A	OFFICE 317A	3 SOUTHEAST	CEILING CASSETTE	350 CFM	20 CFM	0 in-wg	8000 Btu/h	9000 Btu/h	208 V	1	60 Hz	0.2 A	45 lb	MITSUBISHI PLFY-P08NCM	1,2,3,4, 5,6,7
VRF	318	OFFICE 317	3 SOUTHEAST	CEILING CASSETTE	350 CFM	20 CFM	0 in-wg	8000 Btu/h	9000 Btu/h	208 V	1	60 Hz	0.2 A	45 lb	MITSUBISHI PLFY-P08NCM	1,2,3,4, 5,6,7
VRF	319	CONFERENCE-LAMPROS 319	3 SOUTHEAST	DUCTED - HIGH STATIC	1300 CFM	130 CFM	0.6 in-wg	36000 Btu/h	40000 Btu/h	208 V	1	60 Hz	3.7 A	155 lb	MITSUBISHI PEFY-P36NMH	1,2,3,4, 5,6,7

1. REFRIGERANT R-410A.
2. SEE SPECIFICATIONS FOR OTHER APPROVED MANUFACTURERS.
3. PROVIDE WITH INTEGRAL PENCIL CONDENSATE PUMP. ROUTE CONDENSATE LINE TO NEAREST FLOOR DRAIN OR FUNNEL DRAIN.
4. PROVIDE WITH INDIVIDUAL ZONE THERMOSTAT.
5. EACH INDIVIDUAL UNIT IS POWERED SEPERATELY.
6. COORDINATE PIPING AND ELECTRICAL CONNECTIONS TO HAVE A MINIMUM OF 36" X 30" CLEARANCE IN FRONT OF ELECTRICAL CONNECTIONS.
7. VARIABLE REFRIGERANT SYSTEM SHALL BE INSTALLED, PIPED, AND CONTROLLED PER MANUFACTURERS RECOMMENDATIONS. SELECTED MANUFACTURER SHALL PROVIDE ALL REQUIRED TRAINING, ONSITE ASSISTANCE, PROJECT SPECIFIC SHOP DRAWINGS, ETC. AS REQUIRED FOR A COMPLETE AND OPERATING SYSTEM.

DFCM approval

SANDERS ASSOCIATES ARCHITECTS
2668 Grant Avenue
Ogden, UT 84401
P : 801.621.7303
www.sandersarch.com

Seal

PROFESSIONAL ENGINEER 01.16.15 WINWARD M. PACKER No. 375080 STATE OF UTAH

Consultant

Project Name

WSU- MILLER ADMINISTRATION
MEP Upgrades and Remodel
3848 HARRISON BLVD.
OGDEN, UTAH 84401

Issued

No.	Date	Description
1	01.16.15	DFCM PLAN REVIEW
2	02.03.15	BID SET

Revision

No.	Date	Description

DFCM Project No. 14031810
SAA Project No. 214016

Drawing Title

MECHANICAL SCHEDULES

Sheet Number

ME603

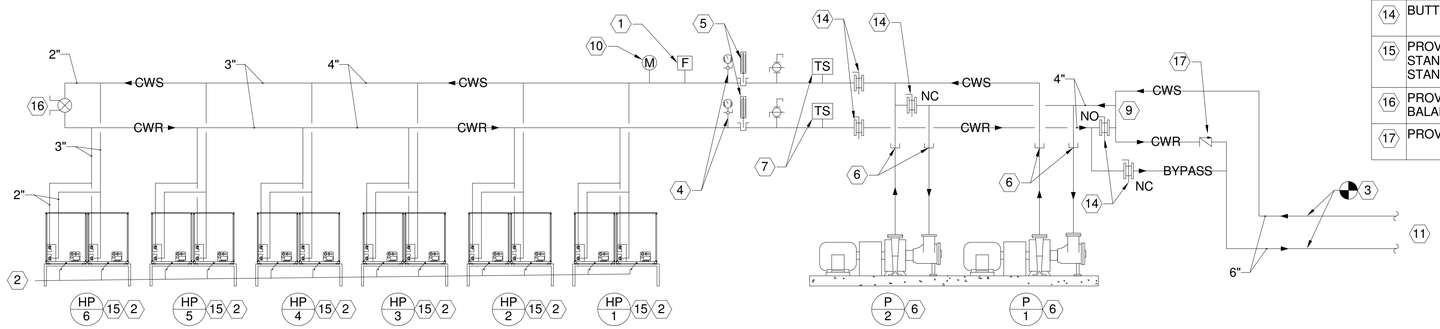

B1 HYDRONIC PIPING SCHEMATIC

SCALE: NONE

	SCHEMATIC NOTES:
1	PROVIDE FLOW SWITCH.
2	PROVIDE TRAP FOR EACH UNIT. ROUTE CONDENSATE TO NEAREST FLOOR DRAIN. COORDINATE SIZE WITH CONDENSATE PIPE SIZING DETAIL. TYPICAL.
3	TIE INTO THE CHILLED WATER PIPING IN THE TUNNEL. FIELD VERIFY.
4	PRESSURE GAUGE W/GAUGE COCK. 0 TO 150 PSIG.
5	THERMOMETER WITH WELL.
6	BASE BID: PROVIDE PIPING DOWN FOR FUTURE PUMPS AND CAP 6'-0" AFF AND CAP. ADD ALT #2: PROVIDE BASE MOUNTED PUMP. SEE PUMP DETAIL FOR REQUIRED FITTINGS AND VALVES.
7	WATER TEMPERATURE SENSOR AND TRANSMITTER SUPPLIED BY ATC CONTRACTOR, INSTALLED BY MECHANICAL CONTRACTOR.
8	CONNECT TO THE EXISTING PIPING.
9	PROVIDE PRIMARY/SECONDARY CHANGE OVER PIPE.
10	PROVIDE BTU METER.
11	EXISTING PIPING IN TUNNEL SHALL REMAIN.
13	PROVIDE BRAIDED STEEL FLEXIBLE PIPE CONNECTORS AT CHILLER.
14	BUTTERFLY VALVE.
15	PROVIDE WATER SOURCE VRF HEAT PUMP UNIT ON STANDS. SEE DETAILS FOR REQUIRED VALVES AND STAND CONSTRUCTION.
16	PROVIDE BYPASS AT THE END OF THE LINE WITH BALANCING CIRCUIT SETTER. BALANCE TO 60 GPM.
17	PROVIDE CHECK VALVE.

SANDERS ASSOCIATES ARCHITECTS
2668 Grant Avenue
Ogden, UT 84401
P.: 801.621.7303
www.sandersarch.com

Seal

PROFESSIONAL ENGINEER
01.16.15
WINWARD M. PACKER
No. 375080
STATE OF UTAH

Consultant

Project Name

WSU- MILLER ADMINISTRATION

MEP Upgrades and Remodel

3848 HARRISON BLVD.
OGDEN, UTAH 84401

Issued

No.	Date	Description
1	01.16.15	DFCM PLAN REVIEW
2	02.03.15	BID SET

Revision

No.	Date	Description

DFCM Project No. 14031810

SAA Project No. 214016

Drawing Title

MECHANICAL
HYDRONIC
SCHEMATIC

Sheet Number

ME901

DFCM approval

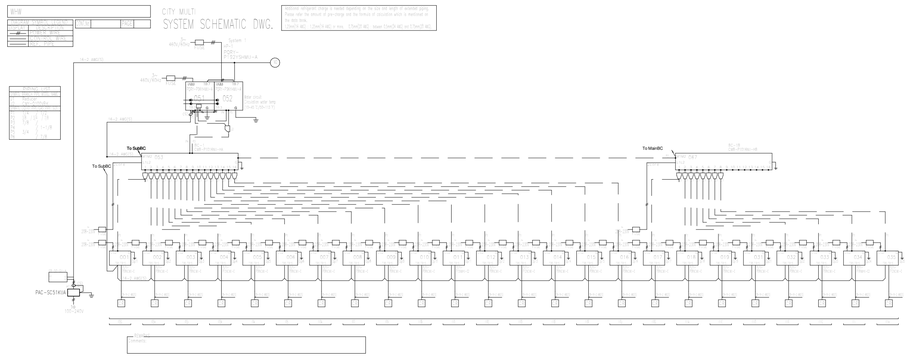

C1 HP-1 DIAGRAM
SCALE: NONE

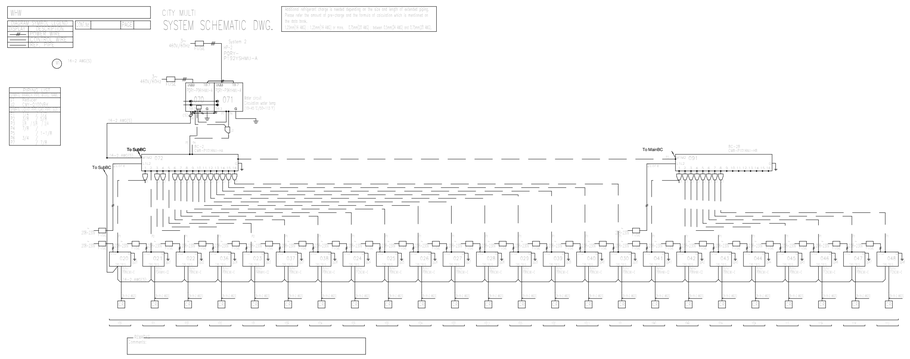

B1 HP-2 DIAGRAM
SCALE: NONE

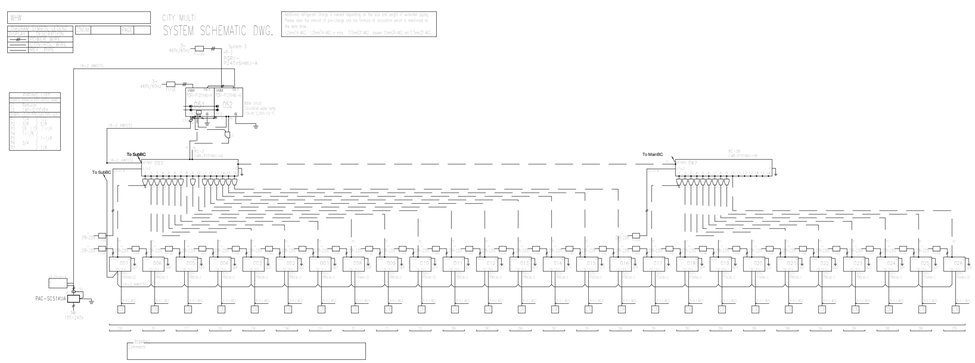

A1 HP-3 DIAGRAM
SCALE: NONE

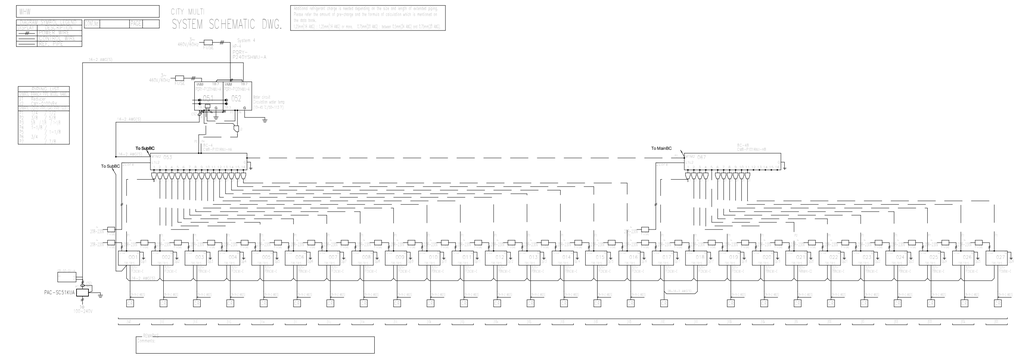

C4 HP-4 DIAGRAM
SCALE: NONE

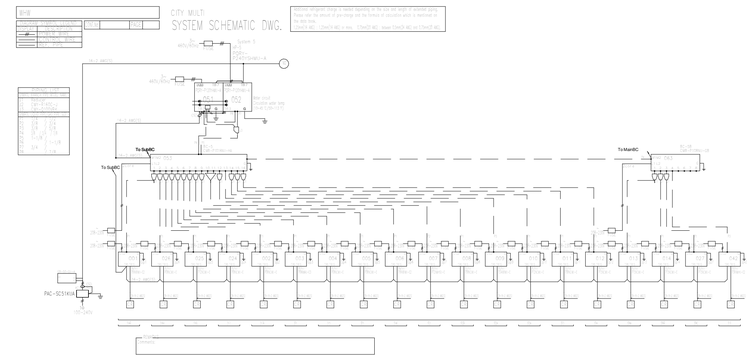

B4 HP-5 DIAGRAM
SCALE: NONE

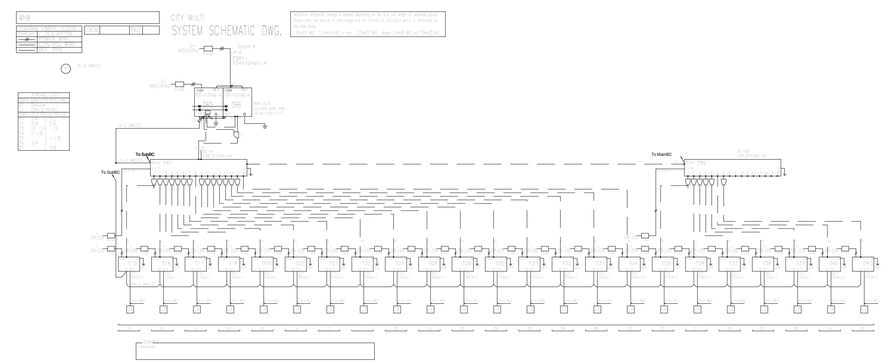

A4 HP-6 DIAGRAM
SCALE: NONE

DFCM approval

SANDERS ASSOCIATES ARCHITECTS
2668 Grant Avenue
Ogden, UT 84401
P.: 801.621.7303
www.sandersarch.com

Seal

PROFESSIONAL ENGINEER
01.16.15
WINWARD M. PACKER
No. 375080
STATE OF UTAH

Consultant

Project Name

WSU- MILLER ADMINISTRATION
MEP Upgrades and Remodel
3848 HARRISON BLVD.
OGDEN, UTAH 84401

Issued

No.	Date	Description
1	01.16.15	DFCM PLAN REVIEW
2	02.03.15	BID SET

Revision

No.	Date	Description

DFCM Project No. 14031810
SAA Project No. 214016

Drawing Title

MECHANICAL VRF SCHEMATICS

Sheet Number

ME902

PLUMBING LEGEND

MEANING	SYMBOL OR ABBREVIATION	MEANING	SYMBOL OR ABBREVIATION
HOT WATER LINE	HW	WALL CLEANOUT	WCO
COLD WATER LINE	CW	CLEANOUT	CO
HOT WATER RECIRCULATING LINE	HWREC	CLEANOUT TO GRADE	COTG
VENT LINE	V	FLOOR CLEANOUT	FCO
WASTE LINE	SS	BALL VALVE	ϕ
GAS LINE	G	UNION	
VENT THRU ROOF	VTR	CONNECTION TO EXISTING PIPING	
UNDER FLOOR	UF	REGULATOR	Ⓡ
SANITARY SEWER	SS	POINT OF REMOVAL FROM EXISTING PIPING	
PRIMARY ROOF DRAIN	PRD	SECONDARY ROOF DRAIN	SRD
CONDENSATE DRAIN	D		

PLUMBING GENERAL NOTES

G-1 - ALL PLUMBING SHALL BE INSTALLED AND CONFORM TO THE 2012 EDITION OF THE INTERNATIONAL PLUMBING CODE (IPC) WITH UTAH ANNOTATIONS AND LOCAL AUTHORITY REQUIREMENTS.

G-2 - ALL PIPING MATERIALS SHALL MEET ALL REQUIREMENTS OF IPC AND LOCAL AUTHORITY. PLASTIC PIPING SHALL BE ALLOWED ONLY WHERE ALLOWED BY CODE. PLASTIC PIPING SHALL NOT BE ROUTED THROUGH RETURN AIR PLENUMS OR OTHER AREAS PROHIBITED BY THE IMC, IPC, OR NFPA CODES OR BY LOCAL AUTHORITY.

G-3 - GAS PIPING INSTALLATION SHALL BE IN STRICT ACCORDANCE WITH GAS COMPANY REGULATIONS, NFPA CODE REQUIREMENTS, AND LOCAL AUTHORITY.

G-4 - ALL MATERIALS SHALL BE NEW AND SHALL BE DOMESTIC MADE UNLESS SPECIFICALLY APPROVED OTHERWISE IN WRITING BY ARCHITECT OR OWNER.

G-5 - PROVIDE VACUUM BREAKERS AND BACK FLOW PREVENTERS WHERE REQUIRED BY CODE OR WHERE THERE MAY BE ANY POSSIBLE CHANCE FOR CROSS CONTAMINATION. PREVENTERS SHALL BE INSTALLED IN ACCORDANCE WITH UTAH CODE.

G-6 - ALL PLUMBING INFORMATION IS NOT LIMITED TO THE PLUMBING DRAWINGS. CONTRACTOR SHALL BE RESPONSIBLE FOR INFORMATION ON ALL OTHER CONSTRUCTION DOCUMENTS INCLUDING SPECIFICATIONS, ARCHITECTURAL DRAWING, STRUCTURAL DRAWINGS, MECHANICAL DRAWINGS, AND ELECTRICAL DRAWINGS.

G-7 - THE WORKING DRAWINGS ARE DIAGRAMMATIC. BECAUSE OF THE SMALL SCALE OF THE DRAWING, THEY DO NOT SHOW EVERY OFFSET, BEND OR ELBOW NECESSARY FOR THE COMPLETE INSTALLATION IN THE SPACE PROVIDED. ALL PIPING SHALL BE CHECKED AND COORDINATED WITH THE SPECIFICATIONS, ARCHITECTURAL, STRUCTURAL, MECHANICAL, AND ELECTRICAL DRAWINGS.

G-8 - COORDINATE ALL PIPING AND PLUMBING EQUIPMENT WITH ALL OTHER TRADES AND/OR CONTRACTORS PRIOR TO INSTALLATION.

G-9 - ANY AND ALL ALTERATIONS TO THE SYSTEM SHOWN SHALL BE THE RESPONSIBILITY OF THIS CONTRACTOR AND ARCHITECT/ENGINEER SHALL BE NOTIFIED IN WRITING PRIOR TO CHANGES.

G-10 - GAS LINE FITTINGS SHALL BE STANDARD WELD FITTINGS WITH TEPERED REDUCERS. DO NOT USE VALVES, UNIONS, OR AUTO CONTROLS IN GAS LINES ROUTED IN INACCESSIBLE CONCEALED SPACES.

G-11 - ALL WATER SYSTEMS SHALL MEET THE REQUIREMENTS OF ANSI/NSF STANDARD 61 SECTION 9 (1998), CONCERNING METAL CONTAMINATS IN THE WATER SYSTEM.

G-12 - WATER PIPING SHALL NOT BE ROUTED IN OUTSIDE WALLS OR ON EXTERIOR SIDE OF BUILDING INSULATION ENVELOPE.

G-13 - WATER HAMMER ARRESTORS SHALL BE INSTALLED IN ALL WATER LINES WITH QUICK OPEN OR QUICK CLOSE VALVES.

WATER HAMMER ARRESTOR SCHEDULE:

TYPE A	1-11 FIXTURE UNITS
TYPE B	12-32 FIXTURE UNITS
TYPE C	33-60 FIXTURE UNITS
TYPE D	61-113 FIXTURE UNITS

DFCM approval

SANDERS ASSOCIATES ARCHITECTS
2668 Grant Avenue
Ogden, UT 84401
P : 801.621.7303
www.sandersarch.com

Seal

PROFESSIONAL ENGINEER
01.16.15
WINWARD M. PACKER
No. 375080
STATE OF UTAH

Consultant

Project Name

WSU- MILLER ADMINISTRATION
MEP Upgrades and Remodel
3848 HARRISON BLVD.
OGDEN, UTAH 84401

Issued

No.	Date	Description
1	01.16.15	DFCM PLAN REVIEW
2	02.03.15	BID SET

Revision

No.	Date	Description

DFCM Project No. 14031810
SAA Project No. 214016

Drawing Title

PLUMBING LEGEND AND GENERAL NOTES

Sheet Number

PG001

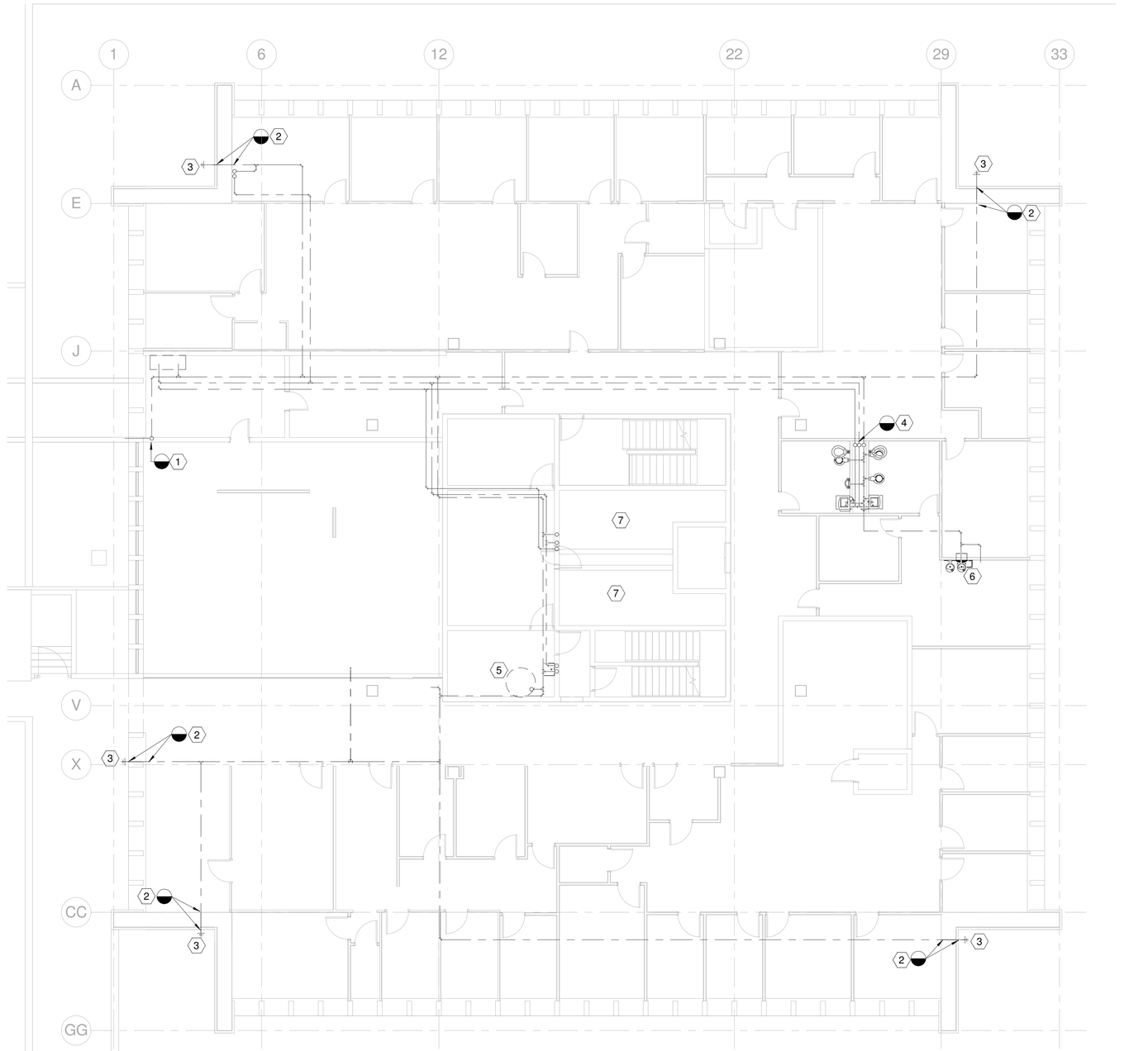

1 PLUMBING LEVEL 1 DEMO PLAN
1/8" = 1'-0"

SHEET NOTES

1. REMOVE ALL EXISTING GALVANISED PIPING BACK TO THIS APPROXIMATE LOCATION. FIELD VERIFY.
2. EXISTING PIPING IN THE WALL SHALL REMAIN. DEMO OTHER PIPING. FIELD VERIFY.
3. REMOVE AND REPLACE THE EXISTING WALL HYDRANT.
4. EXISTING COPPER PIPING IN RESTROOM SHALL REMAIN. REMOVE OTHER PIPING. FIELD VERIFY.
5. REMOVE EXISTING WATER STORAGE TANK AND ASSOCIATED ITEMS IN THIS APPROXIMATE LOCATION. FIELD VERIFY.
6. REMOVE AND REPLACE EXISTING DRINKING FOUNTAIN. REMOVE AND REPLACE WATER PIPING. RECONNECT TO WASTE AND VENT.
7. MOVE EXISTING FIXTURES AND WATER PIPING IN RESTROOMS. WASTE AND VENT SHALL REMAIN AND BE REUSED.

GENERAL NOTES:

1. THE INTENT IS TO REMOVE AND REPLACE THE EXISTING GALVANIZED PIPING WITH COPPER ON THE DOMESTIC WATER. REMOVE AND REPLACE FIXTURES IN LARGE RESTROOMS, EXTERIOR WALL HYDRANTS, AND DRINKING FOUNTAINS AS SHOWN.
2. SEE PD101 FOR 1ST LEVEL, PD102 FOR 2ND LEVEL, AND PD103 FOR 3RD LEVEL.

SANDERS ASSOCIATES ARCHITECTS
2668 Grant Avenue
Ogden, UT 84401
P : 801.621.7303
www.sandersarch.com

Seal

PROFESSIONAL ENGINEER
01.16.15
WINWARD M. PACKER
No. 375080
STATE OF UTAH

Consultant

Project Name

WSU- MILLER ADMINISTRATION

MEP Upgrades and Remodel

3848 HARRISON BLVD.
OGDEN, UTAH 84401

Issued

No.	Date	Description
1	01.16.15	DFCM PLAN REVIEW
2	02.03.15	BID SET

Revision

No.	Date	Description

DFCM Project No. 14031810
SAA Project No. 214016

Drawing Title

PLUMBING LEVEL 1
DEMO PLAN

Sheet Number

PD101

DFCM approval

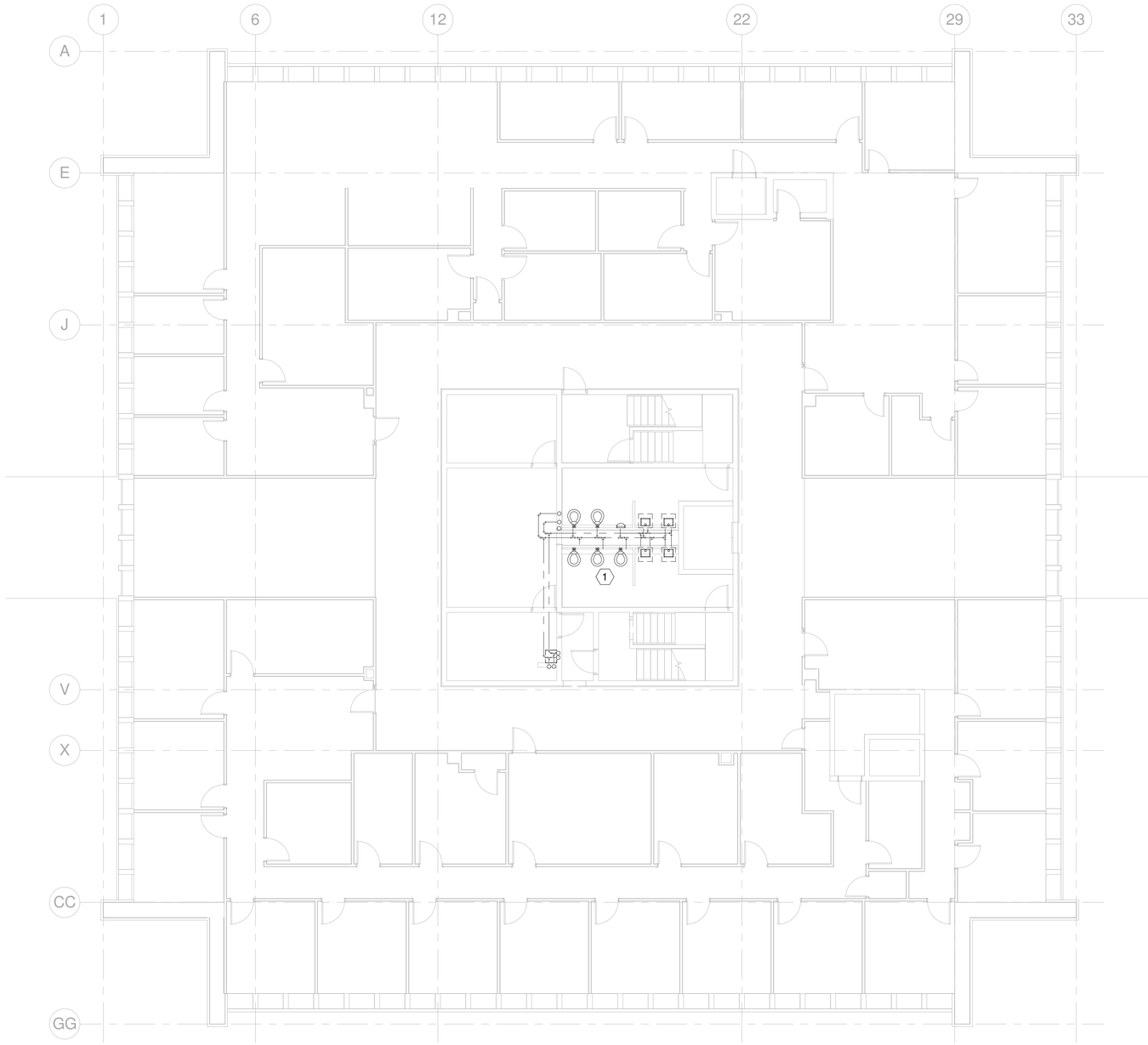

1 PLUMBING LEVEL 2 DEMO PLAN
1/8" = 1'-0"

SHEET NOTES

1 REMOVE AND REPLACE EXISTING FIXTURES AND DOMESTIC WATER PIPING, WASTE AND VENT SHALL REMAIN. FIELD VERIFY.

GENERAL NOTES:

1. THE INTENT IS TO REMOVE AND REPLACE THE EXISTING GALVANIZED PIPING WITH COPPER ON THE DOMESTIC WATER. REMOVE AND REPLACE FIXTURES IN LARGE RESTROOMS, EXTERIOR WALL HYDRANTS, AND DRINKING FOUNTAINS AS SHOWN.
2. SEE PD101 FOR 1ST LEVEL, PD102 FOR 2ND LEVEL, AND PD103 FOR 3RD LEVEL.

SANDERS ASSOCIATES ARCHITECTS
2668 Grant Avenue
Ogden, UT 84401
P.: 801.621.7303
www.sandersarch.com

Seal

PROFESSIONAL ENGINEER
01.16.15
WINWARD M. PACKER
No. 375080
STATE OF UTAH

Consultant

Project Name

WSU- MILLER ADMINISTRATION

MEP Upgrades and Remodel

3848 HARRISON BLVD.
OGDEN, UTAH 84401

Issued

No.	Date	Description
1	01.16.15	DFCM PLAN REVIEW
2	02.03.15	BID SET

Revision

No.	Date	Description

DFCM Project No. 14031810
SAA Project No. 214016

Drawing Title

PLUMBING LEVEL 2
DEMO PLAN

Sheet Number

PD102

DFCM approval

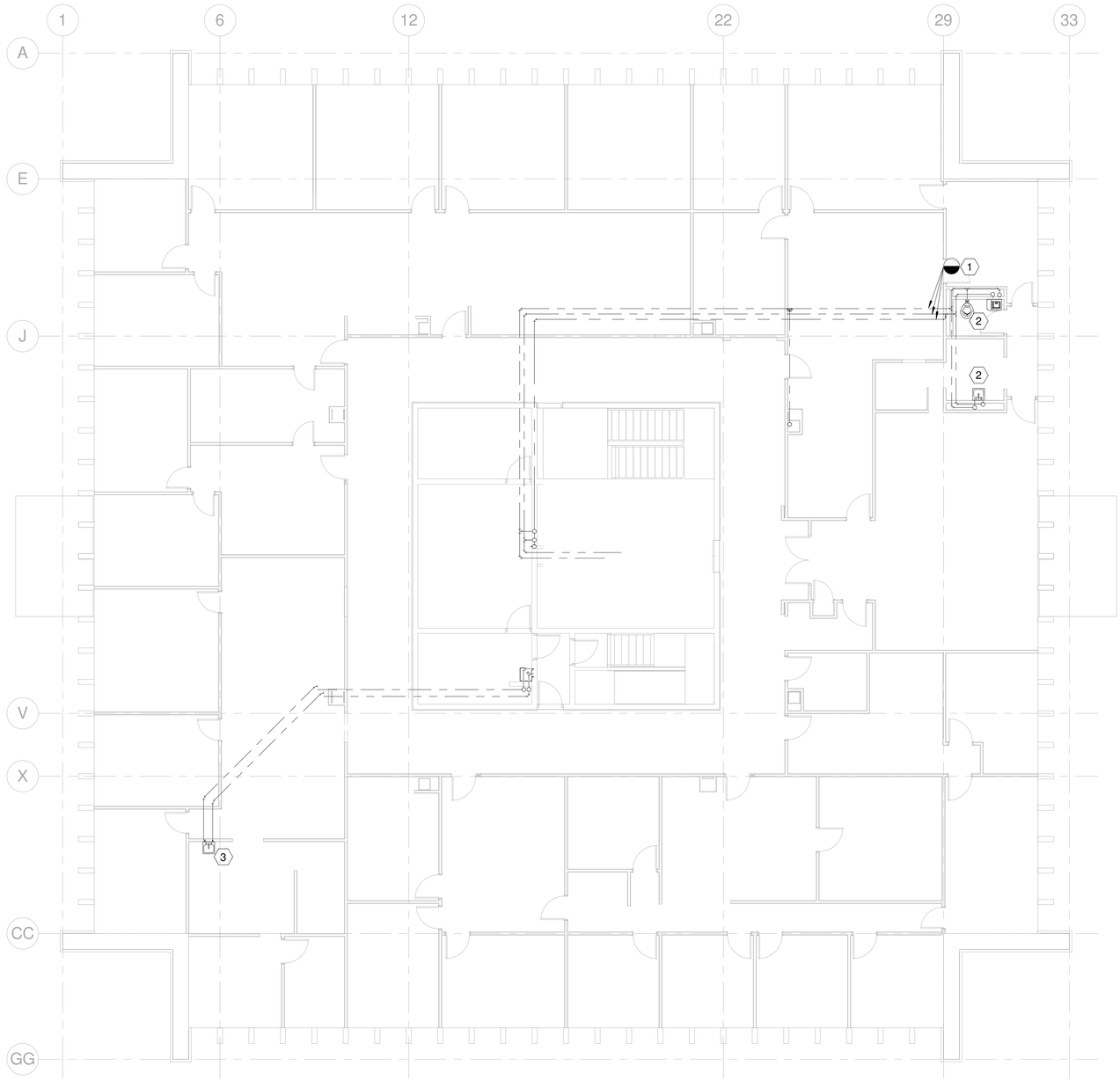

1 PLUMBING LEVEL 3 DEMO PLAN
1/8" = 1'-0"

SHEET NOTES

1. REMOVE EXISTING DOMESTIC WATER TO THIS POINT. WATER PIPING TO FIXTURES WAS RECENTLY REPLACED WITH COPPER.
2. EXISTING FIXTURES SHALL REMAIN.
3. EXISTNG SINK, WASTE, AND VENT PIPING SHALL REMAIN. REMOVE AND REPLACE WATER PIPING.

GENERAL NOTES:

1. THE INTENT IS TO REMOVE AND REPLACE THE EXISTING GALVANIZED PIPING WITH COPPER ON THE DOMESTIC WATER. REMOVE AND REPLACE FIXTURES IN LARGE RESTROOMS, EXTERIOR WALL HYDRANTS, AND DRINKING FOUNTAINS AS SHOWN.
2. SEE PD101 FOR 1ST LEVEL, PD102 FOR 2ND LEVEL, AND PD103 FOR 3RD LEVEL.

SANDERS ASSOCIATES ARCHITECTS
2668 Grant Avenue
Ogden, UT 84401
P : 801.621.7303
www.sandersarch.com

Seal

PROFESSIONAL ENGINEER
01.16.15
WINWARD M. PACKER
No. 375080
STATE OF UTAH

Consultant

Project Name

WSU- MILLER ADMINISTRATION

MEP Upgrades and Remodel

3848 HARRISON BLVD.
OGDEN, UTAH 84401

Issued

No.	Date	Description
1	01.16.15	DFCM PLAN REVIEW
2	02.03.15	BID SET

Revision

No.	Date	Description

DFCM Project No. 14031810
SAA Project No. 214016

Drawing Title

PLUMBING LEVEL 3
DEMO PLAN

Sheet Number

PD103

DFCM approval

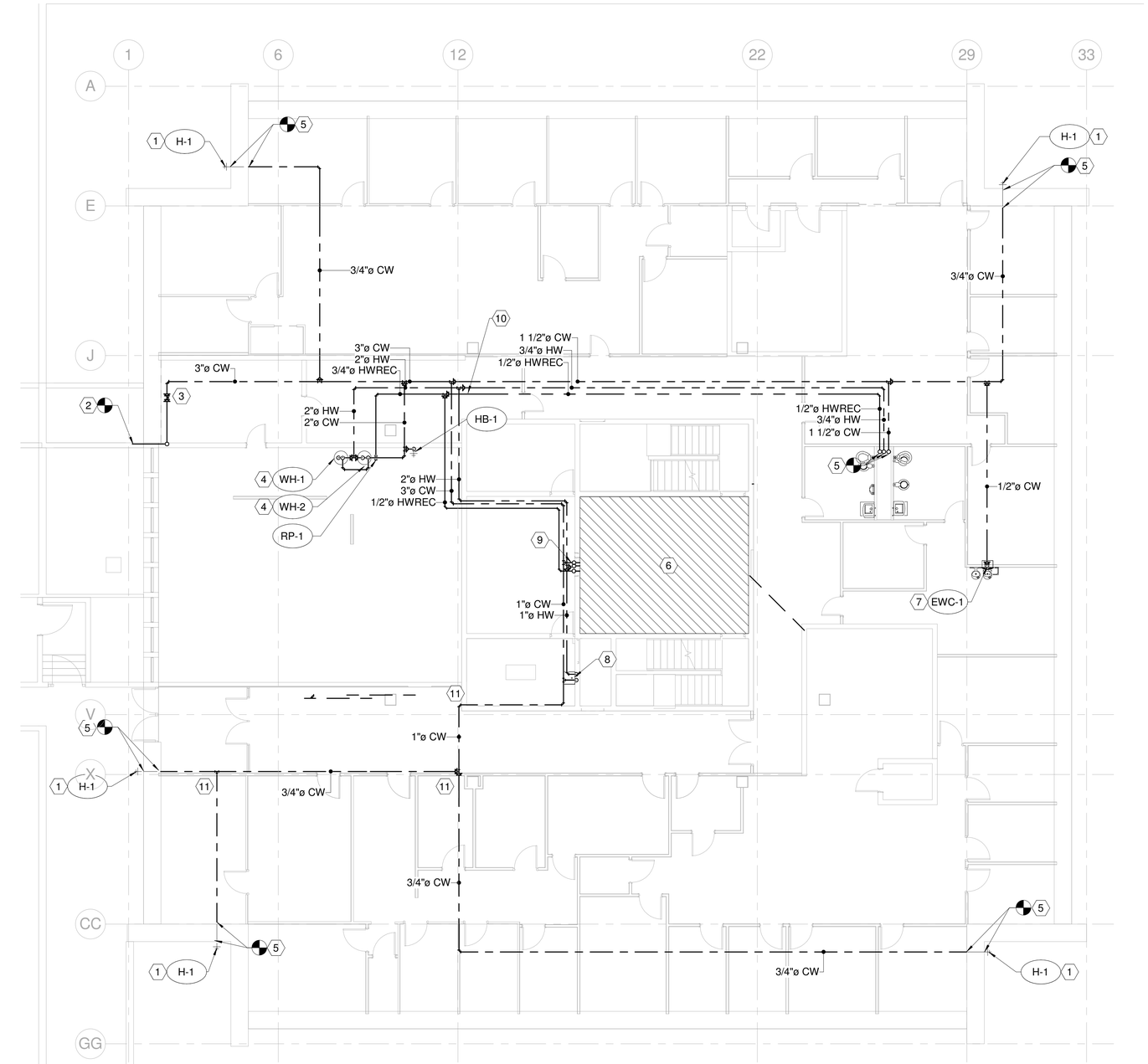

1 PLUMBING LEVEL 1 PLAN
1/8" = 1'-0"

SHEET NOTES

1. PROVIDE NEW FREEZE PROOF WALL HYDRANT. TIE INTO THE EXISTING WATER LINE IN THE WALL. FIELD VERIFY.
2. TIE INTO THE EXISTING WATER SERVICE IN THE TUNNEL IN THIS APPROXIMATE LOCATION. FIELD VERIFY.
3. PROVIDE NEW PRV STATION PER DETAIL.
4. PROVIDE NEW HYBRID WATER HEATERS. SEE DETAIL FOR REQUIRED PIPING AND VALVES.
5. TIE INTO THE EXISTING PIPING IN THIS APPROXIMATE LOCATION. FIELD VERIFY.
6. SEE PE401 FOR LARGE SCALE PLAN OF RESTROOMS.
7. PROVIDE NEW DRINKING FOUNTAIN. PROVIDE NEW WATER CONNECTIONS. TIE INTO THE EXISTING WASTE & VENT.
8. 1" CW, 1" HW DOWN.
9. 3" CW, 2" HW, AND 1/2" HWRECIRC UP.
10. PROVIDE CIRCUIT SETTER ON HOT WATER RECIRC LINE IN THIS APPROXIMATE LOCATION. BALANCE TO 0.5 GPM.
11. FIRE CAULK AROUND PIPING PENETRATING RATED CORRIDOR WALLS.

GENERAL NOTES:

1. THE INTENT IS TO REMOVE AND REPLACE THE EXISTING GALVANIZED PIPING WITH COPPER ON THE DOMESTIC WATER. REMOVE AND REPLACE FIXTURES IN LARGE RESTROOMS, EXTERIOR WALL HYDRANTS, AND DRINKING FOUNTAINS AS SHOWN.
2. SEE PE101 FOR 1ST LEVEL, PE102 FOR 2ND LEVEL, PE103 FOR 3RD LEVEL, PE401 FOR LARGE SCALE RESTROOM PLANS.
3. PROVIDE SHUT OFF VALVES ON HOT WATER, COLD WATER, AND HOT WATER RECIRC LINE ENTERING EACH RESTROOM

SANDERS ASSOCIATES ARCHITECTS
2668 Grant Avenue
Ogden, UT 84401
P.: 801.621.7303
www.sandersarch.com

Seal

PROFESSIONAL ENGINEER
01.16.15
WINWARD M. PACKER
No. 375080
STATE OF UTAH

Consultant

Project Name

WSU- MILLER ADMINISTRATION

MEP Upgrades and Remodel

3848 HARRISON BLVD.
OGDEN, UTAH 84401

Issued

No.	Date	Description
1	01.16.15	DFCM PLAN REVIEW
2	02.03.15	BID SET

Revision

No.	Date	Description
1	02/02/15	PLAN REVIEW

DFCM Project No. 14031810
SAA Project No. 214016

Drawing Title

PLUMBING LEVEL1 PLAN

Sheet Number

PE101

DFCM approval

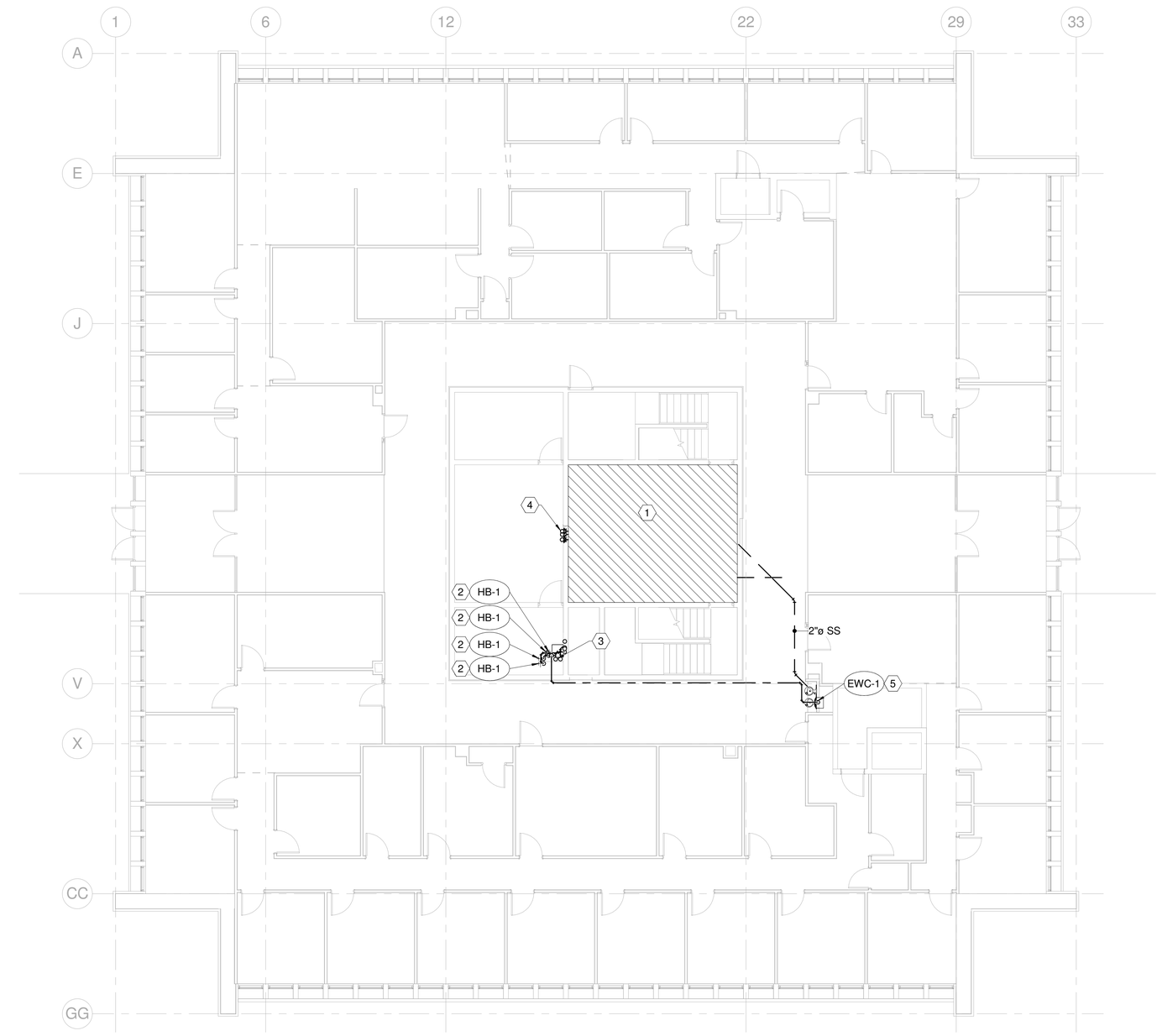

1 PLUMBING LEVEL 2 PLAN
1/8" = 1'-0"

SHEET NOTES

1 SEE PE401 FOR LARGE SCALE PLAN OF RESTROOMS.
2 PROVIDE HOT AND COLD HOSE BIBS IN JANITORS ROOM FOR 2 WASHING MACHINES. PROVIDE 2 SETS TO MATCH EXISTING.
3 1" CW, 1" HW DOWN.
4 2-1/2" CW, 1-1/2" HW, AND 1/2" HWRECIRC UP. 3" CW, 2" HW, AND 1/2" HWRECIRC DOWN.
5 PROVIDE NEW DRINKING FOUNTAIN IN THIS APPROXIMATE LOCATION. ROUTE VENT UP AND TIE INTO VENT FROM DRINKING FOUNDTAIN ABOVE THEN THROUGH THE ROOF AND TIE SANITARY SEWER INTO RESTROOM DRAIN. FIELD VERIFY.

GENERAL NOTES:

1. THE INTENT IS TO REMOVE AND REPLACE THE EXISTING GALVANIZED PIPING WITH COPPER ON THE DOMESTIC WATER. REMOVE AND REPLACE FIXTURES IN LARGE RESTROOMS, EXTERIOR WALL HYDRANTS, AND DRINKING FOUNTAINS AS SHOWN.
2. SEE PE101 FOR 1ST LEVEL, PE102 FOR 2ND LEVEL, PE103 FOR 3RD LEVEL, PE401 FOR LARGE SCALE RESTROOM PLANS.
3. PROVIDE SHUT OFF VALVES ON HOT WATER, COLD WATER, AND HOT WATER RECIRC LINE ENTERING EACH RESTROOM

SANDERS ASSOCIATES ARCHITECTS
2668 Grant Avenue
Ogden, UT 84401
P : 801.621.7303
www.sandersarch.com

Seal

PROFESSIONAL ENGINEER
01.16.15
WINWARD M. PACKER
No. 375080
STATE OF UTAH

Consultant

Project Name

WSU- MILLER ADMINISTRATION

MEP Upgrades and Remodel

3848 HARRISON BLVD.
OGDEN, UTAH 84401

Issued

No.	Date	Description
1	01.16.15	DFCM PLAN REVIEW
2	02.03.15	BID SET

Revision

No.	Date	Description

DFCM Project No. 14031810
SAA Project No. 214016

Drawing Title

PLUMBING LEVEL 2 PLAN

Sheet Number

PE102

DFCM approval

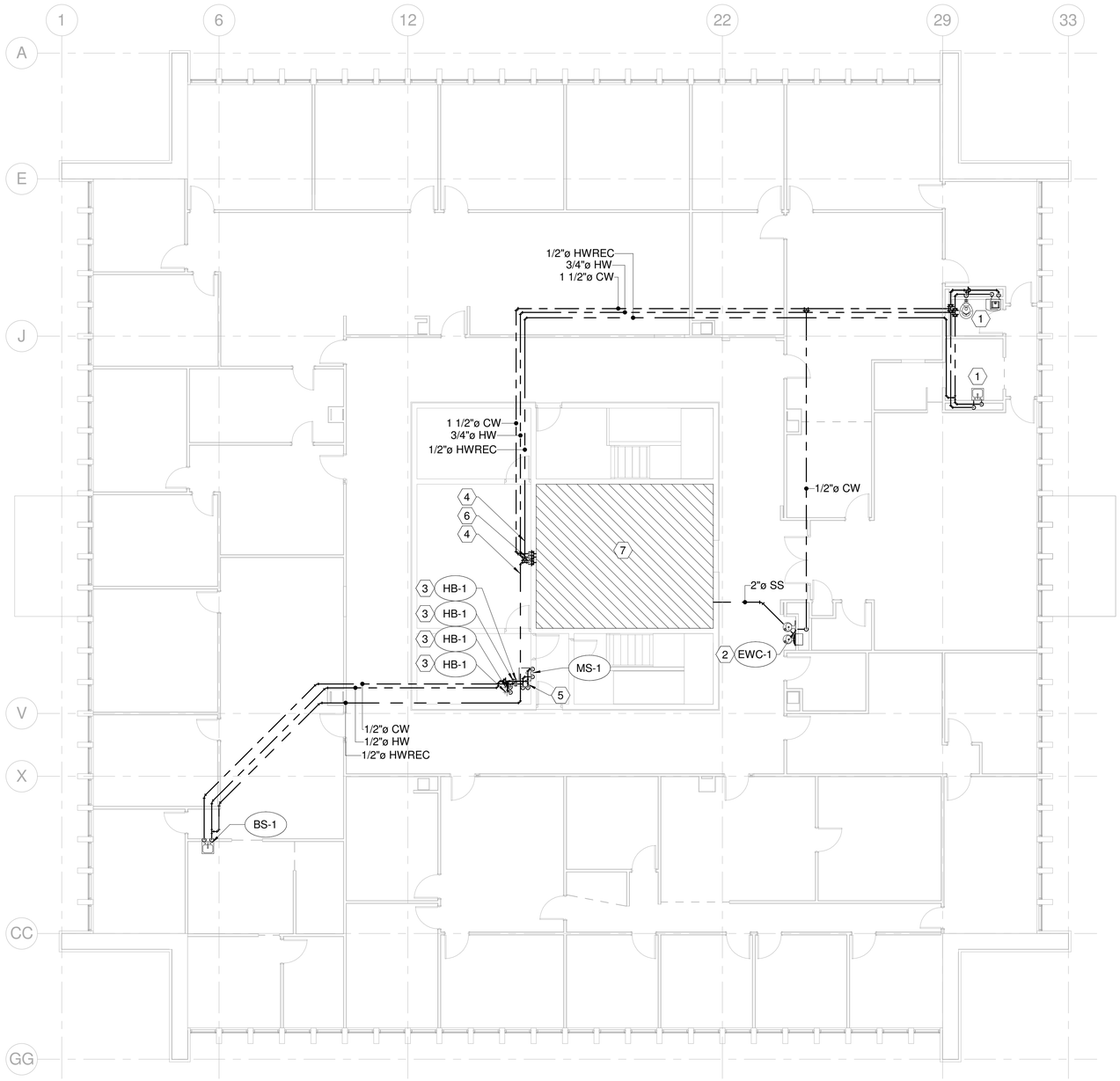

1 PLUMBING LEVEL 3 PLAN
1/8" = 1'-0"

SHEET NOTES

1. EXISTING FIXTURES, WASTE, AND VENT PIPING SHALL REMAIN.
2. PROVIDE NEW DRINKING FOUNTAIN IN THIS APPROXIMATE LOCATION. ROUTE VENT UP THROUGH ROOF AND TIE SANITARY SEWER INTO RESTROOM DRAIN. FIELD VERIFY.
3. PROVIDE HOT AND COLD HOSE BIBS IN JANITORS ROOM FOR WASHING MACHINES. PROVIDE 2 SETS TO MATCH EXISTING.
4. PROVIDE CIRCUIT SETTER ON HOT WATER RECIRC LINE IN THIS APPROXIMATE LOCATION. BALANCE TO 0.5 GPM.
5. 1" CW, 1" HW DOWN.
6. 2-1/2" CW, 1-1/2" HW, AND 1/2" HWRECIRC DOWN.
7. SEE PE401 FOR LARGE SCALE PLAN OF RESTROOMS.

GENERAL NOTES:

1. THE INTENT IS TO REMOVE AND REPLACE THE EXISTING GALVANIZED PIPING WITH COPPER ON THE DOMESTIC WATER. REMOVE AND REPLACE FIXTURES IN LARGE RESTROOMS, EXTERIOR WALL HYDRANTS, AND DRINKING FOUNTAINS AS SHOWN.
2. SEE PE101 FOR 1ST LEVEL, PE102 FOR 2ND LEVEL, PE103 FOR 3RD LEVEL, PE401 FOR LARGE SCALE RESTROOM PLANS.
3. PROVIDE SHUT OFF VALVES ON HOT WATER, COLD WATER, AND HOT WATER RECIRC LINE ENTERING EACH RESTROOM

SANDERS ASSOCIATES ARCHITECTS
2668 Grant Avenue
Ogden, UT 84401
P.: 801.621.7303
www.sandersarch.com

Seal

PROFESSIONAL ENGINEER
01.16.15
WINWARD M. PACKER
No. 375080
STATE OF UTAH

Consultant

Project Name

WSU- MILLER ADMINISTRATION

MEP Upgrades and Remodel

3848 HARRISON BLVD.
OGDEN, UTAH 84401

Issued

No.	Date	Description
1	01.16.15	DFCM PLAN REVIEW
2	02.03.15	BID SET

Revision

No.	Date	Description

DFCM Project No. 14031810
SAA Project No. 214016

Drawing Title

PLUMBING LEVEL 3 PLAN

Sheet Number

PE103

DFCM approval

SHEET NOTES

1. PROVIDE NEW FLOOR DRAIN AND TIE INTO THE EXISTING SANITARY SEWER PIPING BELOW THE FLOOR. FIELD VERIFY.
2. PROVIDE NEW WATER CLOSET. PROVIDE NEW DOMESTIC WATER PIPING AND CARRIER. TIE INTO THE EXISTING SANITARY SEWER IN PLUMBING CHASE. FIELD VERIFY.
3. PROVIDE NEW COUNTER MOUNTED LAV. PROVIDE NEW DOMESTIC WATER PIPING. TIE INTO THE EXISTING SANITARY SEWER IN THE PLUMBING CHASE. FIELD VERIFY.
4. SEE PE101 THROUGH PE103 FOR CONTINUATION OF PIPING DOWN TO MECHANICAL ROOM.
5. PROVIDE CIRCUIT SETTER ON HOT WATER RECIRC LINE IN THIS APPROXIMATE LOCATION. BALANCE TO 0.5 GPM.
6. PROVIDE NEW URINAL. PROVIDE NEW DOMESTIC WATER PIPING AND CARRIER. TIE INTO THE EXISTING SANITARY SEWER IN PLUMBING CHASE. FIELD VERIFY.
7. PROVIDE KEYED HOSE BIB BELOW ONE LAV. REMOVE KEY AND GIVE IT TO THE OWNER.

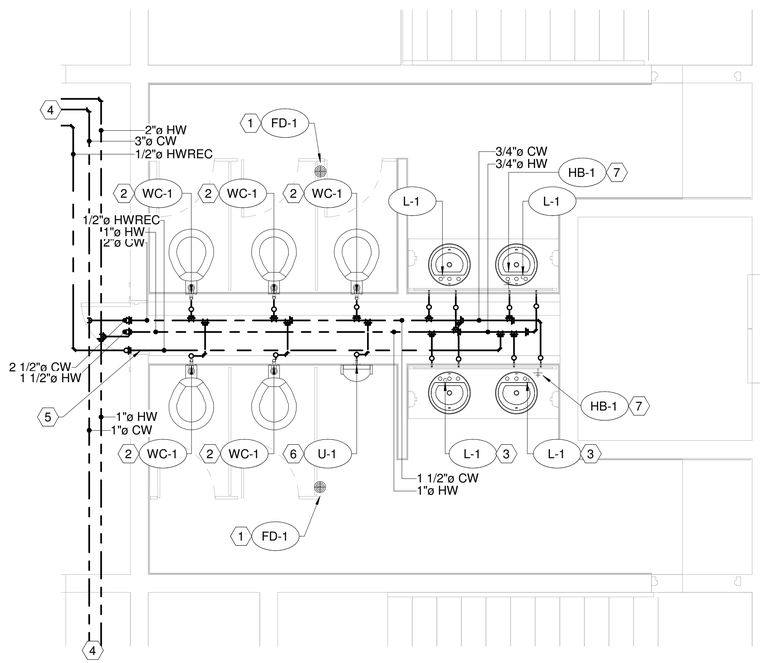

1 ENLARGED PLUMBING LEVEL 1 RESTROOM PLAN
3/8" = 1'-0"

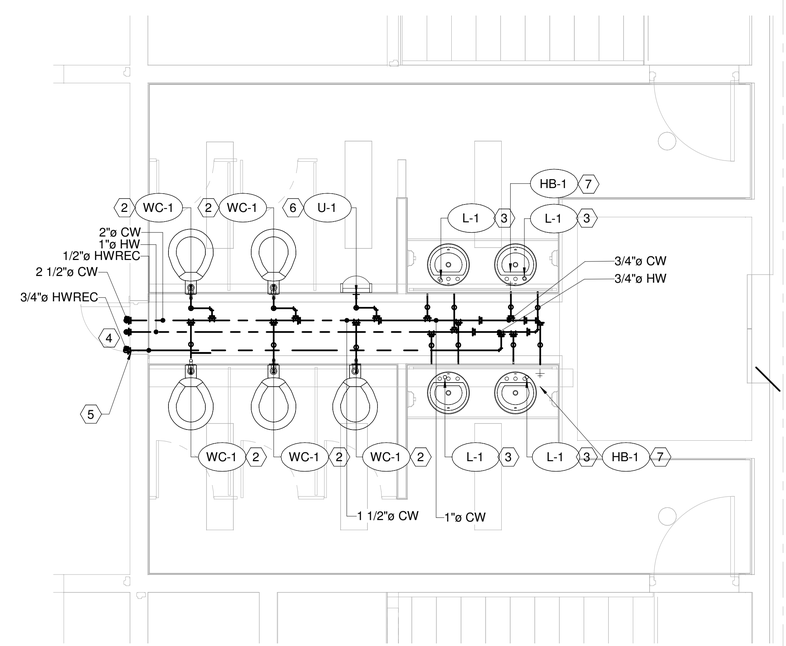

2 ENLARGED PLUMBING LEVEL 2 RESTROOMS
3/8" = 1'-0"

SANDERS ASSOCIATES ARCHITECTS
2668 Grant Avenue
Ogden, UT 84401
P.: 801.621.7303
www.sandersarch.com

Seal

PROFESSIONAL ENGINEER
01.16.15
WINWARD M. PACKER
No. 375080
STATE OF UTAH

Consultant

Project Name

WSU- MILLER ADMINISTRATION

MEP Upgrades and Remodel

3848 HARRISON BLVD.
OGDEN, UTAH 84401

Issued

No.	Date	Description
1	01.16.15	DFCM PLAN REVIEW
2	02.03.15	BID SET

Revision

No.	Date	Description

DFCM Project No. 14031810
SAA Project No. 214016

Drawing Title

PLUMBING LARGE SCALE RESTROOM PLANS

Sheet Number

PE401

DFCM approval

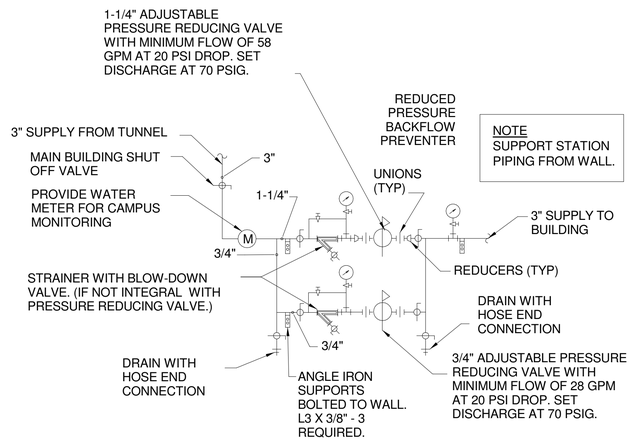

C3 HORIZONTAL WATER PRESSURE REDUCING STATION DETAIL

SCALE: NONE

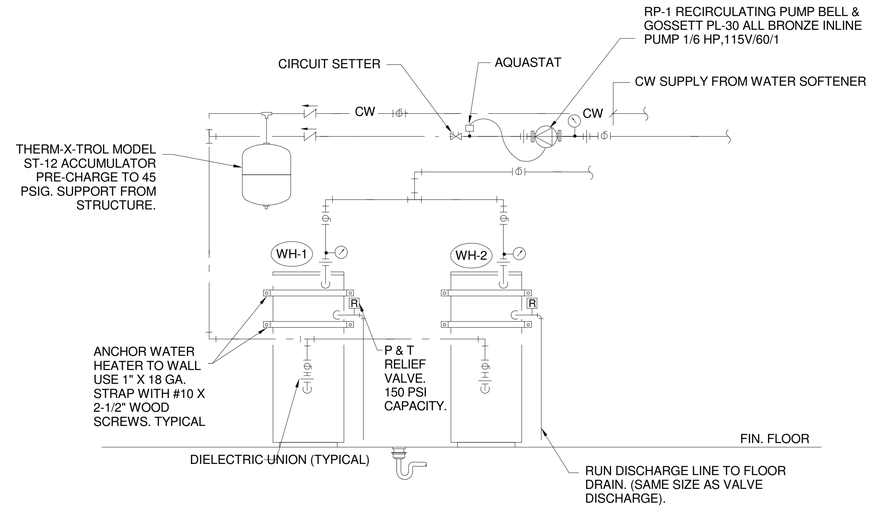

C4 ELECTRIC HYBRID WATER HEATER PIPING DETAIL

SCANE = NONE

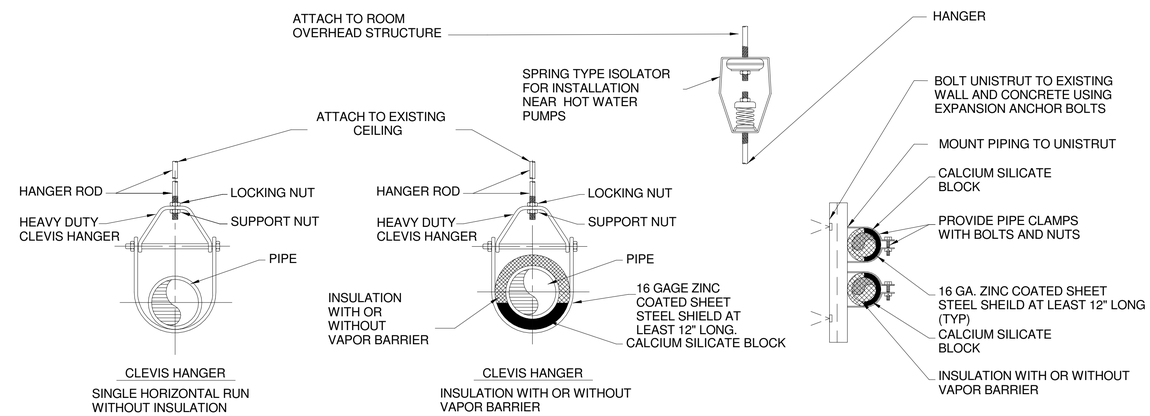

B4 PIPE HANGER DETAIL

DFCM approval

SANDERS ASSOCIATES ARCHITECTS
2668 Grant Avenue
Ogden, UT 84401
P.: 801.621.7303
www.sandersarch.com

Seal

PROFESSIONAL ENGINEER 01.16.15 WINWARD M. PACKER No. 375080 STATE OF UTAH

Consultant

Project Name

WSU- MILLER ADMINISTRATION

MEP Upgrades and Remodel

3848 HARRISON BLVD.
OGDEN, UTAH 84401

Issued

No.	Date	Description
1	01.16.15	DFCM PLAN REVIEW
2	02.03.15	BID SET

Revision

No.	Date	Description

DFCM Project No. 14031810

SAA Project No. 214016

Drawing Title

PLUMBING DETAILS

Sheet Number

PE501

PLUMBING FIXTURE SCHEDULE

TAG

EQUIPMENT NUMBER	FIXTURE	PF TRAP	PF WASTE	PF VENT	PF COLD WATER	PF HOT WATER	REMARKS
EWC-1	ELECTRIC WATER COOLER	1 1/2"	1 1/2"	1 1/2"	1/2"	0"	ELECTRIC BI-LEVEL FOUNTAIN. ELKAY EZSTL8C OR EQUAL.
FD-1	FLOOR DRAIN	2"	2"	1 1/2"	0"	0"	PROVIDE WITH TRAP GUARD. WATTS FD-100-A OR EQUAL.
H-1	FREEZE PROOF WALL HYDRANT	0"	0"	0"	1/2"	0"	PROVIDE FREEZE PROOF WALL HYDRANT.
HB-1	FREEZE PROOF WALL HYDRANT	0"	0"	0"	1/2"	0"	PROVIDE FREEZE PROOF WALL HYDRANT.
L-1	LAVATORY	1 1/2"	1 1/2"	1 1/2"	1/2"	1/2"	COUNTER MOUNTED DROP IN SINK. PROVIDE WITH THERMOSTATIC AND PRESSURE MIXING VALVE. KOHLER K-2196 WITH MOEN 8211 OR EQUAL.
RP-1	RECIRC PUMP	0"	0"	0"	0"	3/4"	PROVIDE RECIRC PUMP. BRONZE IMPELLER. B&G PL-30 WITH 3 GPM AT 15 FT HEAD. 120 VOLT SINGLE PHASE PLUG IN.
U-1	URINAL	3"	3"	2"	3/4"	0"	WALL MOUNTED FLUSH VALVE. AMERICAN STANDARD 6590.125 WITH ZURN PINT FLUSH VALVE OR EQUAL.
WC-1	WATER CLOSET	0"	4"	2"	1 1/4"	0"	WALL MOUNTED FLUSH VALVE WATER CLOSET WITH MAP SCORE OF 1000. DUAL FLUSH WITH BATTERY OPERATED SENSOR. 1.6 GPF HIGH AND 1.0 GPF LOW.

WATER HEATER (HEAT PUMP) SCHEDULE

TAG

EQUIPMENT NUMBER	ELECTRICAL						GPH RECOVERY @ 100 F	STORAGE CAPACITY	RELIEF VALVE BTU / PRESSURE RATING	OPERATING WEIGHT	MANUF & MODEL	SCHEDULE NOTES
	VOLTAGE	PHASE	FREQUENCY	MCA	MOCP	WATTAGE						
WH-1	208 V	1	60 Hz	24 A	30 A	5 kW	57	50 gal	PER MANUFACTURERS RECOMMENDATIONS	600 lb	RHEEM HB50RH	1,2
WH-2	208 V	1	60 Hz	24 A	30 A	5 kW	57	50 gal	PER MANUFACTURERS RECOMMENDATIONS	600 lb	RHEEM HB50RH	1,2

1. SEE SPECIFICATIONS FOR OTHER APPROVED MANUFACTURERS.
2. 208-230 VOLT SINGLE PHASE POWER.

DFCM approval

SANDERS ASSOCIATES ARCHITECTS
2668 Grant Avenue
Ogden, UT 84401
P : 801.621.7303
www.sandersarch.com

Seal

PROFESSIONAL ENGINEER
01.16.15
WINWARD M. PACKER
No. 375080
STATE OF UTAH

Consultant

Project Name

WSU- MILLER ADMINISTRATION
MEP Upgrades and Remodel
3848 HARRISON BLVD.
OGDEN, UTAH 84401

Issued

No.	Date	Description
1	01.16.15	DFCM PLAN REVIEW
2	02.03.15	BID SET

Revision

No.	Date	Description

DFCM Project No. 14031810
SAA Project No. 214016

Drawing Title

PLUMBING SCHEDULES

Sheet Number

PE601

COMMUNICATION SYSTEMS SYMBOL LIST

SYMBOL	DESCRIPTION
	TELEPHONE TERMINAL BOARD
	GROUND BUS BAR
	FLUSH FLOOR OUTLET WITH TELE/DATA. TO BE HUBBELL OR WIREMOLD RFB4-SS/S38PTXXX WITH 2 DUPLEX OUTLETS AND 2 DATA OUTLETS AND COVERPLATES
	FLUSH TELE/DATA OUTLET BY TELECOMMUNICATIONS CONTRACTOR
WL	WIRELESS DEVICE IN THE CEILING
S	SPEAKER
TV	FLUSH TELEVISION OUTLET BY TELECOMMUNICATIONS CONTRACTOR
M	MICROPHONE JACK
B	BELL
P	O.H.P. - OVER HEAD PROJECTOR

SWITCHES SYMBOL LIST

SYMBOL	DESCRIPTION
$	SINGLE POLE TOGGLE SWITCH - 20 AMP
$a,b	SINGLE POLE TOGGLE SWITCH - 20 AMP, LETTERS INDICATE SWITCH ASSIGNMENT
$3	THREE WAY TOGGLE SWITCH - 20 AMP
$4	FOUR WAY TOGGLE SWITCH - 20 AMP
$P	PILOT LIGHT TOGGLE SWITCH
$k	KEYED LIGHT SWITCH
PC	PHOTO CELL SENSOR - LIGHTING CONTROL SYSTEM
$T	MANUAL DISCONNECT WITH THERMAL OVERLOAD PROTECTION
	PUSH BUTTON SWITCH

CALLOUT SYMBOL LIST

SYMBOL	DESCRIPTION
T-X	LIGHTING FIXTURE CALLOUT
XX-X	MECHANICAL EQUIPMENT CALLOUT
X E-XXX	DEVICE REFERENCE CALLOUT
X X	REFERENCE NOTE CALLOUT

FIRE ALARM SYSTEM SYMBOL LIST

SYMBOL	DESCRIPTION
XXX	WATERFLOOD (XXX - ADDRESS)
	SMOKE DETECTOR
FSD	FIRE SMOKE DAMPER
	SPEAKER/STROBE
	STROBE ONLY
F	HAND PULL
	DOOR HOLDER
RM	REMOTE MODULE
	HEAT DETECTOR
TS	TAMPER SWITCH
FS	FLOW SWITCH

LIGHTING SYSTEMS SYMBOL LIST

SYMBOL	DESCRIPTION
	ELECTRICAL PANEL LOCATION
	LAY-IN MOUNTED FLUORESCENT FIXTURE
E	EMERGENCY LIGHTING
	STRIP LIGHT FIXTURE
	RECESSED FIXTURE
	WALL MOUNTED FIXTURE
	PENDANT MOUNTED LIGHT FIXTURE - LENGTH AS SHOWN
	EXIT LIGHT. ARROWS SHOW EXIT DIRECTION
	PENDANT MOUNTED FIXTURE
	RECESSED WALL WASHER FIXTURE
	METAL HALIDE PROJECTOR LIGHT FIXTURE
	CEILING MOUNTED MIRRORS
	WALL MOUNTED LIGHT FIXTURE
	TRACK LIGHTING FIXTURE
	POST MOUNTED PARKING OR WALKWAY LIGHTING

ABBREVIATIONS SYMBOL LIST

SYMBOL	DESCRIPTION
W.P.	INDICATES WEATHER PROOF EQUIPMENT
A	INDICATES DEVICE IS ABOVE COUNTER TOP
CLG.	INDICATES CEILING MOUNTED DEVICE
C.O.	CONVIENCE OUTLET
CU	COPPER
E	INDICATES DEVICE IS ON EMERGENCY CIRCUIT
F.A.C.P.	FIRE ALARM CONTROL PANEL
F.A.R.A.P.	FIRE ALARM REMOTE ANNUNCIATOR PANEL
F.A.N.E.P.	FIRE ALARM NETWORK EXPANDER PANEL
F.L.A.	FULL LOAD AMPERAGE
M.C.A.	MINIMUM CIRCUIT AMPERAGE
M.C.B.	MAIN CIRCUIT BREAKER
M.M.C.	MULTIMEDIA CABINET
M.L.O.	MAIN LUG ONLY
O.H.P.	OVERHEAD PROJECTOR
O.I.T.	OFFICE OF INFORMATION TECHNOLOGY
S	INDICATES DEVICE IS SURFACE MOUNTED
T.V.S.S.	TRANSIENT VOLTAGE SURGE SUPPRESSOR
TYP	TYPICAL
U.P.S.	UNINTERRUPTIBLE POWER SUPPLY
VFD	VARIABLE FREQUENCY DRIVE
XFMR	TRANSFORMER

DISCONNECTS/CIRCUIT BREAKER SYMBOL LIST

SYMBOL	DESCRIPTION
	NON FUSED DISCONNECT SWITCH - SIZE AS REQUIRED
	FUSED DISCONNECT SWITCH - SIZE AS REQUIRED
S	COMBINATION STARTER/FUSED DISCONNECT SWITCH - SIZE AS REQUIRED
	CIRCUIT BREAKER DISCONNECT - SIZE AS REQUIRED
	FUSE - SIZE AS REQUIRED
	MOTOR LOCATION
	ELECTRICAL PANEL LOCATION
	ELECTRICAL METER LOCATION

CONDUITS SYMBOL LIST

SYMBOL	DESCRIPTION
	CONDUITS CONCEALED IN FLOOR OR BELOW GRADE
	CONDUITS CONCEALED IN CEILING AND WALLS
	ARROWS INDICATE HOME RUNS

RECEPTACLES SYMBOL LIST

SYMBOL	DESCRIPTION
	SINGLE OUTLET
	DUPLEX CONVENIENCE OUTLET - 20 AMP
	DUPLEX CONVENIENCE OUTLET - 20 AMP GROUND FAULT INTERRUPTER
	4-PLEX CONVENIENCE OUTLET - 20 AMP
EWC	DUPLEX CONVENIENCE OUTLET - 20 AMP ELECTRIC WATER COOLER
	SPECIAL PURPOSE SINGLE PHASE OUTLET. PROVIDE CONDUCTORS TO MEET OR EXCEED THE AMPACITY OF THE OUTLET PER NEC 310-16, USE 75 DEGREE C COLUMN.
	SPECIAL PURPOSE THREE PHASE OUTLET. PROVIDE CONDUCTORS TO MEET OR EXCEED THE AMPACITY OF THE OUTLET PER NEC 310-16, USE 75 DEGREE C COLUMN.
	FLUSH FLOOR OUTLET BOX
J	JUNCTION BOX - SIZE AND FUNCTION AS REQUIRED
	DUAL CHANNEL SURFACE MOUNTED RACEWAY - POWER AND DATA
	SURFACE MOUNTED RACEWAY WITH 20 AMP MONO OUTLET AT SPACING SHOWN
	SURFACE MOUNTED RACEWAY WITH 20 AMP DUPLEX OUTLET AT SPACING SHOWN

SECURITY SYMBOLS LIST

SYMBOL	DESCRIPTION
	CARD READER (PERSONA)
	DOOR CONTACT
C	CAMERA

GENERAL NOTES:

30. LIGHT SWITCHES INSTALLED ADJACENT TO EACH OTHER, SHALL BE GANGED TOGETHER WITH ONE PIECE COVERPLATE.
31. INSTALL LIGHT SWITCHES 10" TO THE DOOR. COORDINATE EXACT LOCATION OF LIGHT SWITCHES WITH ARCHITECT.
32. SUPPORT THE LAY-IN TYPE FIXTURES INCLUDING DOWN LIGHT FIXTURE FROM THE CEILING DECK INDEPENDENT OF THE CEILING GRID, AS SHOWN ON THE TYPICAL RECESSED FIXTURE MOUNTING DETAIL.
33. INSTALL EXIT SIGNS ON THE WALL IF POSSIBLE.
34. ALL PANELBOARDS SHALL HAVE FULL SIZE NEUTRAL AND GROUND COPPER BUS BARS.
35. ALL PANELS SHALL HAVE COPPER BUSSES AND SHALL BE BRACED FOR A MINIMUM OF 10,000 AIC OR AS SPECIFIED.
36. A SIGN SHALL BE PLACED AT THE SERVICE ENTRANCE EQUIPMENT, INDICATING TYPE AND LOCATION OF ONSITE EMERGENCY POWER SOURCES.
37. WHERE THE GROUNDED CIRCUIT CONDUCTOR CONNECTED TO THE EMERGENCY SOURCE IS CONNECTED TO A GROUNDING ELECTRODE CONDUCTOR AT A LOCATION REMOTE FROM THE EMERGENCY SOURCE, THERE SHALL BE A SIGN AT THE GROUNDING LOCATION THAT SHALL IDENTIFY ALL EMERGENCY AND NORMAL SOURCES CONNECTED AT THAT LOCATION.
38. PROVIDE UPDATED, TYPED WRITTEN, PANEL SCHEDULES FOR NEW. PANELBOARDS SHOWING CIRCUIT CHANGES MADE DURING THIS PROJECT.
39. ALL DISCONNECTS, J-BOXES AND CONDUITS EXPOSED TO THE OUTSIDE WEATHER SHALL BE NON-CORROSIVE, WEATHER PROOF TYPE.
40. ALL DISCONNECTS SHALL BE HEAVY DUTY TYPE.
41. PAINT ALL THE J-BOXES FOR FIRE ALARM SYSTEM WITH RED PAINT. PAINT THE CONDUIT COUPLINGS FOR FIRE ALARM SYSTEM RACEWAY WITH RED PAINT. REFER TO THE SECTION 260553 FOR MORE INFORMATION. ALL FIRE ALARM CONDUIT ARE TO BE RED.
42. ANY CIRCUIT BREAKER FEEDING FIRE ALARM SYSTEMS SHALL CONTAIN RED MARKING AND SHALL BE LABELED "FOR FIRE ALARM SYSTEM".
43. ALL NEW WORK MUST MEET THE CURRENT ADOPTED NATIONAL ELECTRICAL CODE.
44. ALL MATERIALS USED IN THIS INSTALLATION SHALL BE U.L. APPROVED AND NEW.
45. TEMPORARY ELECTRICAL SERVICE IS TO BE PROVIDED BY THE ELECTRICAL CONTRACTOR AND REMOVED BY THE ELECTRICAL CONTRACTOR.
46. DETAILS ARE SHOWN ON DIFFERENT SHEETS. THE CONTRACTOR SHALL REFER TO THOSE DETAILS WHETHER OR NOT CALLED IN REFERENCE NOTES.
47. CONTRACT DOCUMENTS SHALL TAKE PRECEDENCE OVER SHOP DRAWINGS UNLESS SPECIFICALLY NOTED OTHERWISE.
48. ELECTRICAL CONTRACTOR SHALL HAVE A PRE-CONSTRUCTION MEETING WITH ELECTRICAL SHOP SUPERVISOR.
49. ALL J-BOX FEEDING RECESSED LIGHT FIXTURES IN THE GYP. BOARD CEILING SHALL BE LOCATED WITHIN 8" FROM LIGHT FIXTURE OPENING.
50. THERE SHOULD BE NO MORE THAN TWO (2) 90 DEGREE BENDS FOR COMMUNICATION CONDUIT. IF MORE THAN (2) 90 DEGREE BENDS ARE REQUIRED, THEN USE AN ACCESSIBLE PULL BOX.

GENERAL DEMOLITION NOTES:

1. UNDER DEMOLITION THE INTENT OF ELECTRICAL WORK IS TO REMOVE ALL ELECTRICAL DEVICES, LIGHT FIXTURES, CONDUIT, CONDUCTORS, J-BOXES, FIRE ALARM DEVICES, CAMERAS, BELLS, SPEAKERS, PANELBOARD, VOICE/DATA CABLING, VOICE/DATA OUTLETS, ETC. UNLESS INDICATED OTHERWISE. CONDUITS AND J-BOXES IN CONCRETE, MASONRY, AND BLOCK WALLS CAN BE LEFT IN THE WALLS AND REUSED FOR NEW DEVICES AS POSSIBLE. ALL ELECTRICAL EQUIPMENT INCLUDING LIGHT FIXTURES, PANELBOARDS, ETC., WILL BE NEW. BUILDING SHALL BE STRIPPED OF ALL MATERIALS.
2. ALL MATERIAL MUST BE REMOVED AND DISPOSED OF BY DEMOLITION CONTRACTOR, UNLESS INDICATED OTHERWISE ON DEMOLITION PLANS.
3. EXISTING DEMOLITION MATERIALS CAN NOT BE REUSED UNLESS INDICATED OTHERWISE.
4. ELECTRICAL CONTRACTOR IS TO PROVIDE TEMPORARY LIGHTING AND POWER FOR OTHER TRADES DURING DEMOLITION WORK. COORDINATE THIS WORK WITH THE GENERAL CONTRACTOR.
5. DEMOLITION CONTRACTOR IS TO REMOVE ALL ELECTRICAL CONNECTIONS AND CONTROL WIRING TO ALL THE EXISTING MECHANICAL EQUIPMENT IN THE REMODEL AREA, ETC. AS INDICATED. REMOVE ALL CONDUIT AND CONDUCTORS ALL THE WAY BACK TO PANELBOARDS. COORDINATE THIS WORK WITH MECHANICAL CONTRACTOR.
6. ALL MATERIALS TO BE REMOVED FROM THE PREMISES BY THE DEMOLITION CONTRACTOR.
7. PRIOR TO SUBMITTING A BID THE DEMOLITION CONTRACTOR SHALL INSPECT THE SITE AND INCLUDED IN HIS BID PACKAGE ALL CHARGES DUE TO EXISTING CONDITIONS.
8. ANY DAMAGE DONE TO EXISTING EQUIPMENT WHICH IS TO REMAIN WILL BE DEMOLITION CONTRACTOR RESPONSIBILITY TO REPLACE THEM WITH NEW ONES.

SPECIAL NOTES:

1. CONTRACTOR MUST REFER TO MECHANICAL DEMOLITION WORK FOR ADDITIONAL ELECTRICAL WORK REQUIRED FOR MECHANICAL EQUIPMENT.

GENERAL NOTES:

1. ALL MATERIALS TO BE REMOVED AND RETURNED TO THE OWNER. MATERIALS WHICH THE OWNER DECIDES NOT TO KEEP SHALL BE SALVAGED AND REMOVED FROM THE SITE BY THE CONTRACTOR.
2. ALL CONCEALED CONDUIT THAT CANNOT BE REMOVED SHALL BE CUT FLUSH WITH THE FINISH SURFACES AND CAPPED OFF AFTER THE WIRING HAS BEEN DISCONNECTED AT THE PANEL AND REMOVED FROM THE CONDUIT.
3. IN AREAS WHERE CIRCUIT CONTINUITY IS INTERRUPTED, BUT MUST BE MAINTAINED TO THE DEVICES WHICH ARE TO REMAIN, MAKE ALL THE NECESSARY MODIFICATIONS TO THE CIRCUITS IN ORDER TO MAINTAIN THE CIRCUIT INTEGRITY.
4. REFER TO THE ARCHITECTURAL REFLECTED CEILING PLANS FOR THE EXACT LOCATION OF ALL LIGHTING FIXTURES.
5. COORDINATE WITH THE OWNER AND ARCHITECT FOR THE EXACT LOCATION OF THE OUTLETS.
6. PRIOR TO SUBMITTING A BID THE ELECTRICAL CONTRACTOR SHALL INSPECT THE SITE AND INCLUDE IN HIS BID PACKAGE ALL CHARGES DUE TO EXISTING CONDITIONS. SHOP DRAWINGS ARE REQUIRED. ALL LABOR, MATERIAL AND WORKMANSHIP SHALL BE GUARANTEED FOR A PERIOD OF 1 YEAR FROM THE DATE OF ACCEPTANCE BY THE TENANT. REPLACE OR REPAIR ALL DEFECTS DURING THE GUARANTEED PERIOD.
7. THE CONTRACTOR SHALL INFORM THE ARCHITECT/ENGINEER IN WRITING OF ANY DISCREPANCIES FOUND BETWEEN THE INTENDED FUNCTION OF EQUIPMENT AND EQUIPMENT SPECIFIED IN THE CONTRACT DOCUMENTS A MINIMUM OF FIVE (5) WORKING DAYS PRIOR TO ISSUANCE OF THE FINAL BID. FAILURE TO REPORT ANY DISCREPANCY (CATALOG NUMBERS, DISCONTINUED ITEMS, ETC.) DOES NOT RELIEVE THE CONTRACTOR FROM PROVIDING EQUIPMENT WHICH SHALL CONFORM TO AND FULFILL THE INTENT OF THE CONTRACT DOCUMENTS, NOR SHALL IT BE USED AS A CONDITION TO OBTAIN ADDITIONAL FUNDS FROM THE OWNER AFTER THE CONTRACT IS AWARDED. THE CONTRACTOR SHALL REQUEST ALL CLARIFICATIONS OF CONTRACT DOCUMENT REQUIREMENTS IN WRITING TO THE ARCHITECT/ENGINEER A MINIMUM OF FIVE (5) WORKING DAYS PRIOR TO ISSUANCE OF THE FINAL BID.
8. REFER TO THE MECHANICAL SHEETS FOR THE EXACT LOCATION OF THE MECHANICAL EQUIPMENT.
9. THE ELECTRICAL CONTRACTOR SHALL NOTIFY AND COORDINATE WITH THE MECHANICAL CONTRACTOR SO THAT NO PIPING, DUCTS, OR OTHER EQUIPMENT SHALL BE INSTALLED IN ENTRY OR PASS THROUGH ELECTRICAL ROOM OR SPACES ABOVE OR BELOW ELECTRICAL PANELS.
10. ELECTRICAL CONTRACTOR SHALL VERIFY ALL ELECTRICAL LOADS (VOLTAGE, PHASE, CONNECTION REQUIREMENT, ETC.) OF EQUIPMENT FURNISHED UNDER OTHER DIVISIONS WITH APPROVED SHOP DRAWINGS PRIOR TO BEGINNING ROUGH-IN.
11. MINIMUM SIZE OF CONDUIT TO BE 3/4". ALUMINUM CONDUITS SHALL NOT BE USED.
12. USE RIGID STEEL SET SCREW TYPE FITTINGS ONLY. DIE CAST FITTINGS SHALL NOT BE USED.
13. RUN A NEUTRAL CONDUCTOR FOR EACH PHASE CONDUCTOR (EACH CIRCUIT) IN A CONDUIT. NOT MORE THAN THREE (3) CIRCUITS IN A CONDUIT. THREE (3) PHASE CONDUCTORS, THREE (3) NEUTRAL CONDUCTORS (ONE FOR EACH PHASE) AND ONE (1) GROUND CONDUCTOR FOR A TOTAL OF SEVEN (7) CONDUCTORS COMPLY WITH NEC ARTICLE 210.4.
14. PROVIDE PULL WIRES IN EMPTY CONDUITS. REFER TO SPECIFICATION SECTION 260533 FOR MORE INFORMATION.
15. THE MINIMUM SIZE OF THE CONDUCTORS SHALL BE #12 AWG THHN STRANDED COPPER, UNLESS INDICATED OTHERWISE ON THE DRAWINGS.
16. ALL J-BOXES SHALL HAVE MINIMUM DEPTH OF 3" UNLESS OTHERWISE SPECIFIED. SECURE ALL J-BOXES AS SHOWN IN THE DETAILS. FURNISH AND INSTALL PROPER MUD RINGS.
17. ALL NEW EXPOSED CONDUIT SHALL RUN AGAINST THE WALLS OR CEILINGS. DO NOT PENDANT MOUNT ANY CONDUIT FROM THE CEILINGS. KEEP CONDUITS AT ROOF DECK 1-1/2" BELOW THE ROOF DECK PER NEC.
18. AT THE END OF THE JOB, PROVIDE BLANK COVER PLATES TO MATCH THE OTHER COVER PLATES FOR ALL J-BOXES WHERE DEVICES HAVE NOT YET BEEN INSTALLED.
19. SEAL AROUND ALL CONDUIT PENETRATIONS THROUGH FIRE RATED WALLS AND CEILINGS WITH FIRE RATED MATERIAL. 3M IS AN APPROVED MANUFACTURER.
20. ALL ELECTRICAL WIRING MUST BE IN CONDUIT (ROMEX AND MC CABLE ARE NOT PERMITTED).
21. FLEXIBLE CONDUITS CAN ONLY BE USED FOR SHORT RUNS (6' MAXIMUM). REFER TO SPECIFICATION SECTION #260533 FOR MORE INFORMATION.
22. NO CONDUITS SHALL RUN IN DUCT WORK.
23. USE NO. 10 THHN CONDUCTORS FOR CONDUCTOR LENGTH OVER 100 FEET, NO. 8 THHN OVER 200 FEET, NO. 6 THHN OVER 300 FEET AND NO. 4 THHN OVER 400 FEET LENGTH.
24. ALL CONDUITS EXPOSED TO THE WEATHER SHALL BE GALVANIZED RIGID STEEL, UNLESS OTHERWISE NOTED.
25. THE FIRST 10' LENGTH OF ALL BURIED CONDUIT SHALL BE RIGID GALVANIZED STEEL WHERE THEY ARE LEAVING OR ENTERING THE BUILDING, MANHOLE, VAULT, ETC.
26. ALL METALLIC CONDUITS, JOINTS, FITTINGS, ETC., IN CONTACT WITH THE GROUND SHALL BE SPIRALLY WRAPPED WITH 3M SCOTCHRAP-51, 20 MIL TAPE (OR APPROVED EQUAL). 50% OVERLAP IS REQUIRED.
27. ALL UNDERGROUND CONDUIT SHALL BE BURIED 24" MINIMUM BELOW FINAL FINISHED SURFACES OR AS SPECIFIED.
28. PROVIDE TYPED LABEL FOR ALL DUPLEX OUTLETS AND LIGHT SWITCHES TO INDICATE WHICH CIRCUIT THEY ARE TIED TO. REFER TO SPECIFICATION #260533 FOR MORE INFORMATION.
29. ALL DUPLEX OUTLETS AND SWITCHES SHALL BE 20 AMP., 120 VOLT SPEC GRADE. DECOR TYPE HUBBELL AND PASS & SEYMOUR AND LEVITON ARE APPROVED MANUFACTURERS. REFER TO SPECIFICATION #262726 FOR MORE INFORMATION.

SANDERS ASSOCIATES ARCHITECTS
2668 Grant Avenue
Ogden, UT 84401
P : 801.621.7303
www.sandersarch.com

Seal

Consultant
E.C.E. LLC
Electrical Consulting Engineers
939 So. West Temple
Salt Lake City, Utah 84101
Telephone (801) 521-8007
Email: Admin@eceonline.com

Project Name

WSU- MILLER ADMINISTRATION

MEP Upgrades and Remodel

3848 HARRISON BLVD.
OGDEN, UTAH 84401

Issued

No.	Date	Description
1	01.16.15	DFCM PLAN REVIEW
1	02.03.15	BID DOCUMENTS

Revision

No.	Date	Description

DFCM Project No. 14031810
ECE Project No. 4703

Drawing Title

GENERAL NOTES AND SCHEDULES

Sheet Number

EE001

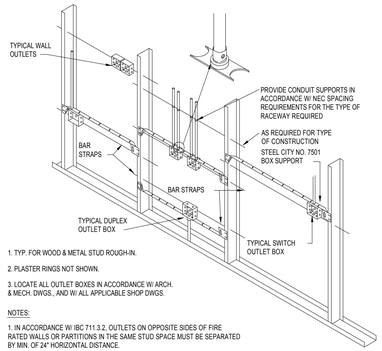

1. TYP. FOR WOOD & METAL STUD ROUGH-IN.

2. PLASTER RINGS NOT SHOWN.

3. LOCATE ALL OUTLET BOXES IN ACCORDANCE W/ ARCH. & MECH. DWGS., AND W/ ALL APPLICABLE SHOP DWGS.

NOTES:

1. IN ACCORDANCE W/ IBC 711.3.2, OUTLETS ON OPPOSITE SIDES OF FIRE RATED WALLS OR PARTITIONS IN THE SAME STUD SPACE MUST BE SEPARATED BY MIN. OF 24" HORIZONTAL DISTANCE.

SCALE: N.T.S.

TYPICAL ROUGH-IN REQUIREMENTS DETAIL

SYSTEM VOLTAGE	A
480	42"
208	36"

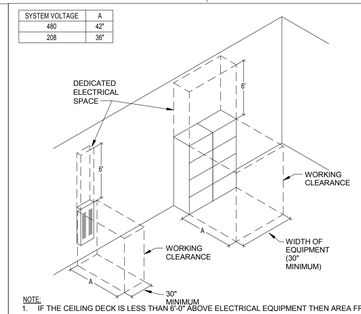

NOTE:

1. IF THE CEILING DECK IS LESS THAN 6'-0" ABOVE ELECTRICAL EQUIPMENT THEN AREA FROM EQUIPMENT TO CEILING DECK SHALL BE DEDICATED ELECTRICAL SPACE (LAY-IN DROP CEILING ARE NOT CONSIDERED AS CEILING DECK.)

2. IF THERE ARE EXPOSED LIVE PARTS ON BOTH SIDES OF WORKING SPACE, THE MINIMUM CLEAR DISTANCES FOR 151-600V TO GROUND SHALL INCREASE FROM 42" TO 48".

SCALE: N.T.S.

TYPICAL PANELBOARD CLEARANCE REQUIREMENTS

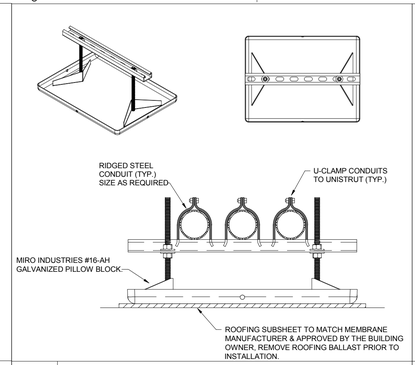

SCALE: N.T.S.

ROOFTOP CONDUIT MOUNTING DETAIL

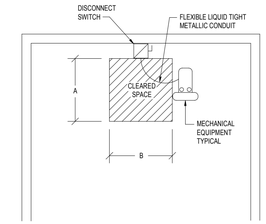

NOTE:

1. THE CONTRACTOR MUST COORDINATE EXACT LOCATION OF THE DISCONNECT WITH THE MECHANICAL CONTRACTOR TO ELIMINATE ANY OBSTACLE (PIPE, CONCRETE PAD, ETC.) IN FRONT OF THE DISCONNECT. IF THERE ARE ANY OBSTACLES, PROVIDE UNISTRUT AND INSTALL THE DISCONNECT NEXT TO MECHANICAL EQUIPMENT IN ORDER TO PROVIDE THE REQUIRED CLEARANCE.

2. PROVIDE MINIMUM CLEARANCE AS FOLLOWS:

SYSTEM VOLTAGE	A	B
480	42"	30"
208	36"	30"

SCALE: N.T.S.

TYPICAL DISCONNECT CLEARANCE REQUIREMENTS

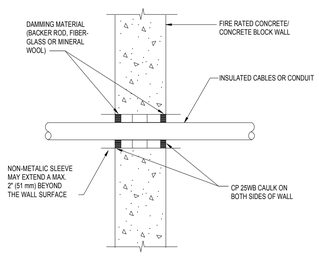

NOTE:
TYPICAL DETAILS SHOWING GENERAL FIRE STOPPING PROCEDURE. ACTUAL PROCEDURE DEPENDS UPON ANNULAR SPACE BETWEEN PIPE AND/OR INSULATION AND OPENING. FOLLOW MANUFACTURER'S INSTRUCTIONS.

UL SYSTEM #49

SCALE: N.T.S.

TYPICAL FIRESTOP FOR CABLES/ CONDUIT THROUGH CONCRETE WALLS

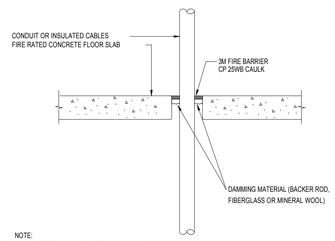

NOTE:
TYPICAL DETAILS SHOWING GENERAL FIRE STOPPING PROCEDURE. ACTUAL PROCEDURE DEPENDS UPON ANNULAR SPACE BETWEEN PIPE AND/OR INSULATION AND OPENING. FOLLOW MANUFACTURER'S INSTRUCTIONS.

UL SYSTEM #49

SCALE: N.T.S.

TYPICAL FIRESTOP FOR CABLES/ CONDUIT THROUGH CONCRETE FLOORING

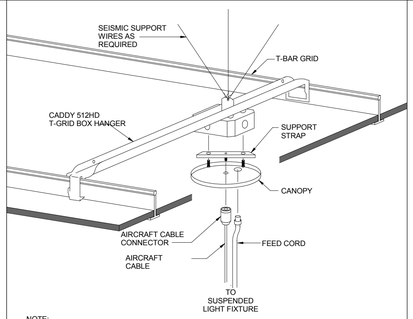

NOTE:
UTILIZE SIMMILAR CONSTRUCTION FOR NON-POWER FEED.

SCALE: N.T.S.

INDIRECT LIGHT FIXTURE MOUNTING DETAIL

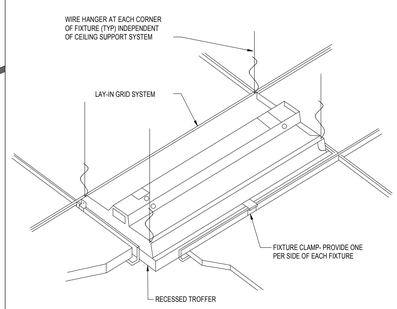

SCALE: N.T.S.

TYPICAL RECESSED FIXTURE MOUNTING DETAIL

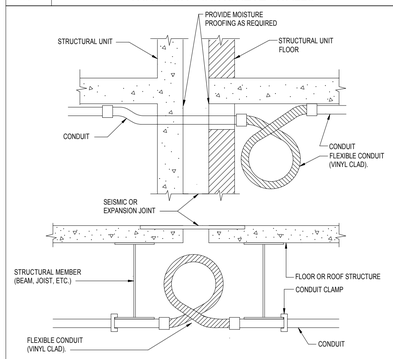

SCALE: N.T.S.

CONDUIT CROSSING SEISMIC OR EXPANSION JOINT DETAIL

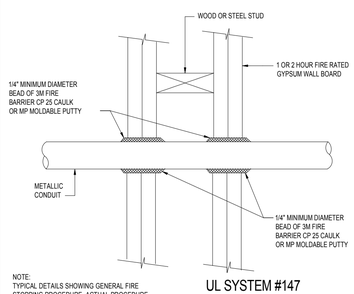

NOTE:
TYPICAL DETAILS SHOWING GENERAL FIRE STOPPING PROCEDURE. ACTUAL PROCEDURE DEPENDS UPON ANNULAR SPACE BETWEEN PIPE AND/OR INSULATION AND OPENING. FOLLOW MANUFACTURER'S INSTRUCTIONS.

UL SYSTEM #147

SCALE: N.T.S.

FIRESTOP FOR METAL CONDUIT THROUGH GYPSUM WALL BOARD

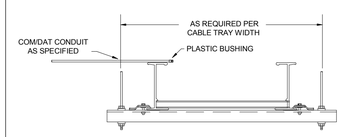

COM/DATA CONDUIT TO BE ON THE TOP

PLASTIC BUSHING FOR ALL CONDUIT

SCALE: N.T.S.

COM/DATA RACEWAY AND CABLE TRAY DETAIL

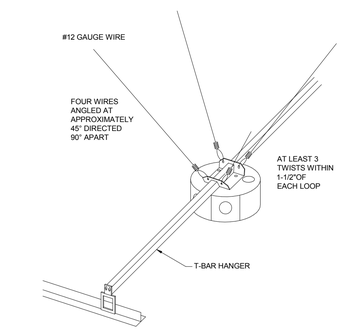

SCALE: N.T.S.

SUSPENDED CEILING J-BOX SUPPORT DETAIL

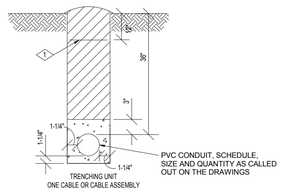

WHEEL COMPACTED BACKFILL UNLESS OTHERWISE SPECIFIED

CONCRETE ENCASEMENT

UNDISTURBED EARTH

NOTES:
1. DEPTHS SPECIFIED ARE TO FINISHED GRADE.
2. OVER-EXCAVATE TRENCHES AS NECESSARY TO ALLOW FOR (a) SAND BEDDING OR (b) LOOSE AND SANDY SOIL OR (c) WHERE MORE THAN ONE CABLE WILL BE INSTALLED IN TRENCH AND LAYING OF FIRST CABLE MAY CAUSE TRENCH DAMAGE AND REDUCTION IN DEPTH.
3. BACKFILL IS PART OF ALL TRENCHING UNITS INCLUDING JOINT-USE TRENCHES.

1 PROVIDE DETECTABLE WARNING TAPE FOR ALL UNDERGROUND UTILITIES. TAPE SHALL BE ACID AND ALKALI RESISTANT POLYETHYLENE FILM (6") WIDE AND (4 MILS) THICK, MINIMUM, WITH METALLIC CORE PROTECTED FROM CORROSION AND DETECTABLE BY METAL DETECTOR UP TO 30" DEEP.

SCALE: N.T.S.

TYPICAL TRENCH DETAIL

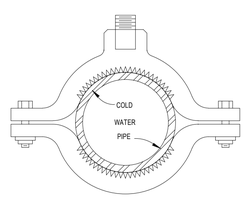

SCALE: N.T.S.

TWO PIECE COPPER PIPE CLAMP DETAIL

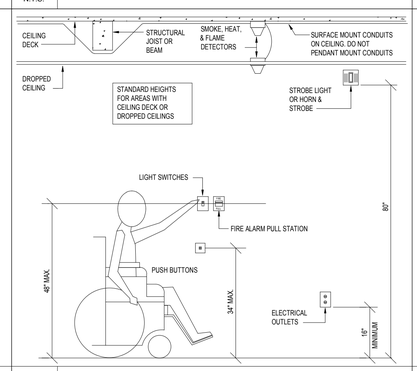

SCALE: N.T.S.

STANDARD HEIGHTS FOR HANDICAPPED ACCESS

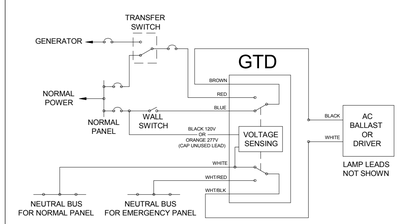

SCALE: N.T.S.

EMERGENCY BODINE TRANSFER SWITCH "GTD" WIRING DETAIL

SANDERS ASSOCIATES ARCHITECTS
2668 Grant Avenue
Ogden, UT 84401
P : 801.621.7303
www.sandersarch.com

Seal

Consultant
E.C.E. LLC
Electrical Consulting Engineers
939 So. West Temple
Salt Lake City, Utah 84101
Telephone (801) 521-8007
Email: Admin@eceonline.com

Project Name

WSU- MILLER ADMINISTRATION

MEP Upgrades and Remodel

3848 HARRISON BLVD.
OGDEN, UTAH 84401

Issued

No.	Date	Description
1	01.16.15	DFCM PLAN REVIEW
1	02.03.15	BID DOCUMENTS

Revision

No.	Date	Description

DFCM Project No. 14031810

ECE Project No. 4703

Drawing Title

DETAILS

Sheet Number

EE002

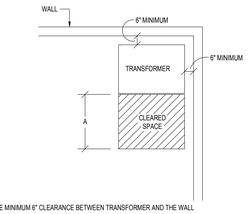

NOTE:
1. PROVIDE MINIMUM 6" CLEARANCE BETWEEN TRANSFORMER AND THE WALL
2. PROVIDE MINIMUM CLEARANCE IN FRONT OF THE TRANSFORMER AS FOLLOWS:

SYSTEM VOLTAGE	A
480	42"
208	36"

3. IF THERE ARE EXPOSED LIVE PARTS ON BOTH SIDES OF WORKING SPACE, THE MINIMUM CLEAR DISTANCES FOR 151-600V TO GROUND SHALL INCREASE FROM 42" TO 48".

SCALE: N.T.S.

TYPICAL DRY TYPE TRANSFORMER CLEARANCE DETAIL

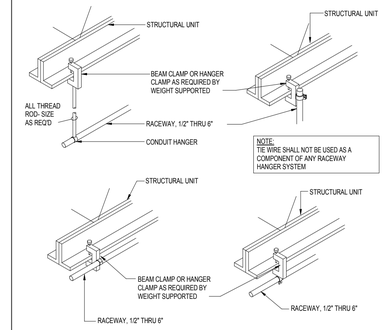

SCALE: N.T.S.

TYPICAL RACEWAY SUPPORT METHODS DETAIL

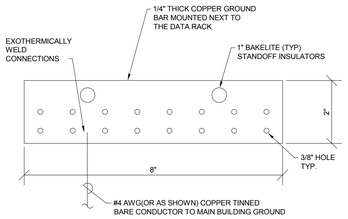

SCALE: N.T.S.

T.T.B. COPPER GROUND BUS BAR

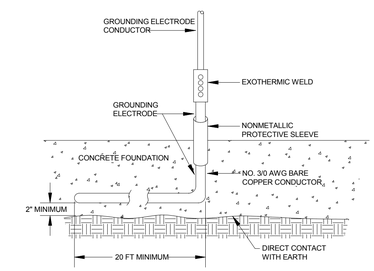

SCALE: N.T.S.

TYPICAL UFER GROUNDING DETAIL

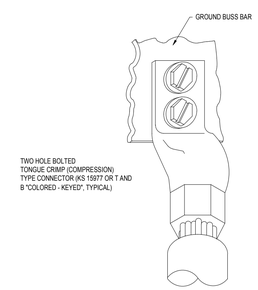

SCALE: N.T.S.

CRIMP TYPE CONNECTORS DETAIL

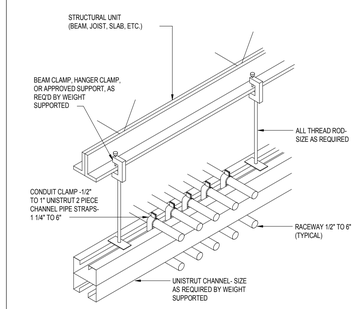

SCALE: N.T.S.

TYPICAL CONDUIT RACK DETAIL

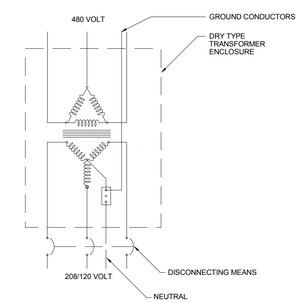

SCALE: N.T.S.

DRY TYPE TRANSFORMER GROUNDING

SANDERS ASSOCIATES ARCHITECTS
2668 Grant Avenue
Ogden, UT 84401
P : 801.621.7303
www.sandersarch.com

Seal

Consultant

E.C.E. LLC
Electrical Consulting Engineers
939 So. West Temple
Salt Lake City, Utah 84101
Telephone (801) 521-8007
Email: Admin@eceonline.com

Project Name

WSU- MILLER ADMINISTRATION

MEP Upgrades and Remodel

3848 HARRISON BLVD.
OGDEN, UTAH 84401

Issued

No.	Date	Description
1	01.16.15	DFCM PLAN REVIEW
1	02.03.15	BID DOCUMENTS

Revision

No.	Date	Description

DFCM Project No. 14031810
ECE Project No. 4703

Drawing Title

DETAILS

Sheet Number

EE003

LIGHTING CONTROL SYMBOLS SCHEDULE

SYMBOL	DESCRIPTION	APPROVED MANUFACTURERS	CATALOG NUMBER
DT	CEILING MOUNTED DUAL TECHNOLOGY DIGITAL MOTION SENSOR.	WATTSTOPPER	LMDC-100
DTL	CEILING MOUNTED DUAL TECHNOLOGY LINE VOLTAGE MOTION SENSOR	WATTSTOPPER	DT-355
UT	CEILING MOUNTED ULTRASONIC LINE VOLTAGE MOTION SENSOR	WATTSTOPPER	UT-355-2
DSWL	WALL MOUNTED DUAL TECHNOLOGY LINE VOLTAGE MOTION SENSOR WITH ONE BUTTON.	WATTSTOPPER	DSW-100
DSW	WALL MOUNTED DUAL TECHNOLOGY DIGITAL MOTION SENSOR WITH ONE BUTTON.	WATTSTOPPER	LMDW-101
PC	SWITCHING AND DIMMING OPEN LOOP DIGITAL PHOTOCELL	WATTSTOPPER	LMLS-500
LV	LOW VOLTAGE DIGITAL ON/OFF OVERRIDE LIGHTING SWITCH.	WATTSTOPPER	LMSW-100
RC	DIGITAL LIGHTING MANAGEMENT ROOM CONTROLLER. NUMBER OF RELAYS AS SHOWN ON THE DRAWINGS.	WATTSTOPPER	LMRC-100
RC D	DIGITAL LIGHTING MANAGEMENT 0-10V DIMMING ROOM CONTROLLER. NUMBER OF RELAYS AS SHOWN ON THE DRAWINGS.	WATTSTOPPER	LMRC-210
RI	RELAY INTERFACE	WATTSTOPPER	LMRL-100

LIGHTING CONTROL NOTES:

1. CONTRACTOR TO SEND PLANS TO MOTION SENSOR SUPPLIER SO THAT THE MANUFACTURER CAN REVIEW AND LOCATE THE SENSORS. DRAWINGS SHALL BE SUBMITTED TO THE ENGINEER FOR REVIEW PRIOR TO ORDERING SENSORS.
2. ULTRASONIC CEILING MOUNT SENSORS SHALL BE LOCATED NO CLOSER THAN 6'-0" TO AIR SUPPLY/RETURN REGISTERS.
3. CONTRACTOR IS RESPONSIBLE FOR PROPER SENSITIVITY AND TIME DELAY SETTINGS, VERIFICATION OF MANUFACTURER'S RECOMMENDED PLACEMENT, AND FIELD VERIFICATION OF CIRCUIT WITH RESPECT TO POWER PACK PLACEMENT.
4. CONTRACTOR IS RESPONSIBLE FOR FIELD VERIFICATION OF REQUIRED NUMBER OF POWER PACKS.
5. MAXIMUM NUMBER OF SENSORS THAT CAN BE WIRED IN PARALLEL TO A SINGLE POWER PACK IS DEPENDENT ON SENSOR MODEL REFER TO INDIVIDUAL DATA SHEETS FOR AMPERAGE CONSUMPTION.
6. ALL SENSOR LOCATIONS ARE APPROXIMATE. REFER TO MANUFACTURERS INSTALLATION INSTRUCTIONS PRIOR TO INSTALLATION

LIGHTING FIXTURE SCHEDULE

SYMBOL	DESCRIPTION	LAMP/FIXTURE INFORMATION		APPROVED MANUFACTURERS	CATALOG NUMBER	PICTURE
T-1	2'x4' DECORATIVE LAY-IN LED LIGHT FIXTURE DIMMABLE	LAMP		FURNISHED BY WSU		
		VOLTAGE	277			
		MOUNT				
		COLOR				
		LUMENS	3800			
T-2	2'X2' DECORATIVE LAY-IN LED LIGHT FIXTURE TO MATCH TYPE T-1, DIMMABLE	LAMP		FURNISHED BY WSU		
		VOLTAGE	277			
		MOUNT				
		COLOR				
		LUMENS	1700			
T-3	4' LED STRIP LIGHT FIXTURE WITH WRAP AROUND LENS, AND CHAIN HUNG	LAMP		LITHONIA	WL4 40L EZ1 LP850 HC36	
		VOLTAGE	277	DAYBRITE	LFR4FLSLD3740ULAG	
		MOUNT				
		COLOR				
		LUMENS	3800			
T-4	6" RECESSED LED LIGHT FIXTURE WITH DROPPED OPAL GLASS	LAMP	INCLUDED	LOUIS POULSEN	BAL-17W LED/5000K/120-277V/WHT	
		VOLTAGE				
		MOUNT				
		COLOR				
		LUMENS	1200			
T-5	4' WIDE TRIMLESS LED RECESSED LINEAR LIGHT FIXTURE. LENGTH AS SHOWN	LAMP	INCLUDED	ARCHITECTURAL LIGHTING WORKS	LPLR35 DRY 4 1 HP10 5000K S LLED UNV DEXT WH	
		VOLTAGE	277	PINNACLE	E4A-35HO-XX-NFN-UNV-1D-W	
		MOUNT				
		COLOR				
		LUMENS	600 / FT			
T-6	LED TAPE COVE LIGHT FIXTURE WITH 120 DEGREE BEAM PATTERN AND REMOTE DRIVER.	LAMP	INCLUDED	JESCO	DL-FLEX-UP-HO-XXXX	
		VOLTAGE				
		MOUNT				
		COLOR				
		LUMENS	600 / FT			
T-7	RECESSED 277 VOLT TRIM LESS TRACK WITH PAR 30 GIMBLE HEAD LAMP HOLDER	LAMP	PAR 30 LED WIDE FLOOD	INTENSE	MB 650 50 W FL50 PS-27	
		VOLTAGE	277	INTENSE	IPS8W-27	
		MOUNT		INTENSE	IPS8RJW	
		COLOR				
		LUMENS				
T-8	1'X4' DECORATIVE FLANGED LED LIGHT FIXTURE.	LAMP	INCLUDED	INTENSE	ALL4 64L D75 LP850 NX	
		VOLTAGE	277	INTENSE	DGA14	
		MOUNT		PINNACLE	LU14A-3540-FL-UNV-1D-W	
		COLOR				
		LUMENS	3800			
T-9	2' WALL MOUNTED SQUARE LED LIGHT FIXTURE WITH WRAP AROUND OPAL LENS	LAMP	INCLUDED	ARCHITECTURAL LIGHTING WORKS	TRPSMB 2' HP900-40K LED-DIM UNV SCBA	
		VOLTAGE				
		MOUNT				
		COLOR				
		LUMENS	1500			
T-10	6" LED CAN LIGHT FIXTURE. COLOR OF CONE BY ARCHITECT	LAMP	INCLUDED	GOTHAM	EVO 50/10 6WR MVOLT EZB RFD173205	
		VOLTAGE				
		MOUNT				
		COLOR				
		LUMENS				
T-11	4' WALL MOUNTED SQUARE LED LIGHT FIXTURE WITH WRAP AROUND OPAL LENS	LAMP	INCLUDED	ARCHITECTURAL LIGHTING WORKS	TRPSMB 4' HP900-40K LED-DIM UNV SCBA	
		VOLTAGE				
		MOUNT				
		COLOR				
		LUMENS	2700			
EX-1	LED EDGE LIT EXIT SIGN WITH NICAD BATTERY AND RECESSED HARDWARE	LAMP	INCLUDED	LITHONIA	EDG 1 G EL M6	
		VOLTAGE	277	CHLORIDE	CN6GW72IC	
		MOUNT				
		COLOR				
		LUMENS				

NOTES:

1. THE WRITTEN CRITERIA OF THE FIXTURE DESCRIPTION TAKES PRECEDENCE OVER THE CATALOG NUMBER.
2. COLOR OF ALL LED LIGHT FIXTURES TO BE 5000K
3. ALL LED LIGHT FIXTURE SHALL HAVE 5 YEARS WARRANTY INCLUDING THE LED LAMPS.

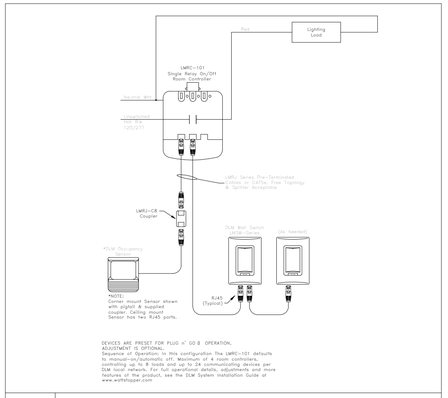

SCALE: N.T.S.

TYPICAL NON-DIMMING

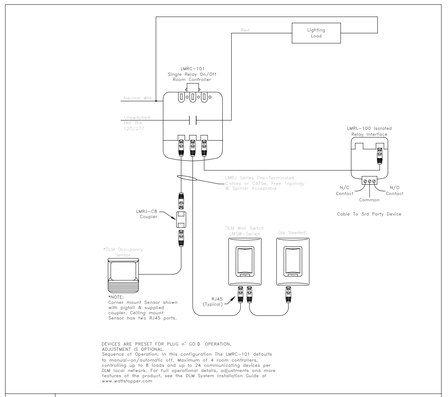

SCALE: N.T.S.

TYPICAL NON-DIMMING WITH ISOLATED RELAY

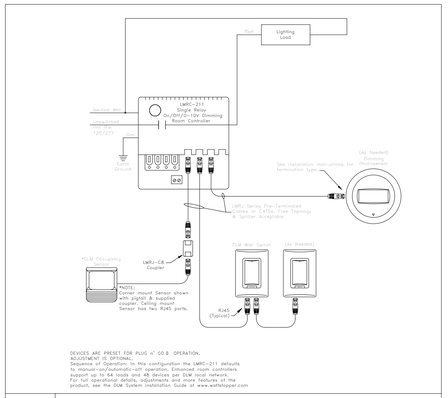

SCALE: N.T.S.

TYPICAL DIMMING

SANDERS ASSOCIATES ARCHITECTS
2668 Grant Avenue
Ogden, UT 84401
P : 801.621.7303
www.sandersarch.com

Seal

Consultant

E.C.E. LLC
Electrical Consulting Engineers
939 So. West Temple
Salt Lake City, Utah 84101
Telephone (801) 521-8007
Email: Admin@eceonline.com

Project Name

WSU- MILLER ADMINISTRATION
MEP Upgrades and Remodel
3848 HARRISON BLVD.
OGDEN, UTAH 84401

Issued

No.	Date	Description
1	01.16.15	DFCM PLAN REVIEW
1	02.03.15	BID DOCUMENTS

Revision

No.	Date	Description

DFCM Project No. 14031810
ECE Project No. 4703

Drawing Title

LIGHTING DETAILS

Sheet Number

EE004

Branch Panel: M1

Location: MECHANICAL 113 **Volts:** 480/277 Wye **A.I.C. Rating:** 35 K
Supply From: MDP **Phases:** 3 **Mains Type:**
Mounting: SURFACE **Wires:** 4 **Mains Rating:** 225 A
Enclosure: Type 1 **MCB Rating:**

CKT	Circuit Description	Trip	Poles	A		B		C		Poles	Trip	Circuit Description	CKT
1	HP-1	20 A	3	3048	3048					3	20 A	HP-2	2
3	--	--	--			3048	3048			--	--	--	4
5	--	--	--					3048	3048	--	--	--	6
7	HP-1	20 A	3	3048	3048					3	20 A	HP-2	8
9	--	--	--			3048	3048			--	--	--	10
11	--	--	--					3048	3048	--	--	--	12
13	HP-3	20 A	3	3880	3880					3	20 A	HP-4	14
15	--	--	--			3880	3880			--	--	--	16
17	--	--	--					3880	3880	--	--	--	18
19	HP-3	20 A	3	3880	3880					3	20 A	HP-4	20
21	--	--	--			3880	3880			--	--	--	22
23	--	--	--					3880	3880	--	--	--	24
25	HP-5	20 A	3	3880	3880					3	20 A	HP-6	26
27	--	--	--			3880	3880			--	--	--	28
29	--	--	--					3880	3880	--	--	--	30
31	HP-5	20 A	3	3880	3880					3	20 A	HP-6	32
33	--	--	--			3880	3880			--	--	--	34
35	--	--	--					3880	3880	--	--	--	36
37	Spare	20 A	3	0	0					3	20 A	Spare	38
39	--	--	--			0	0			--	--	--	40
41	--	--	--					0	0	--	--	--	42
			Total Load:	43233 VA		43233 VA		43233 VA					
			Total Amps:	156 A		156 A		156 A					

Legend:

Load Classification	Connected Load	Demand Factor	Estimated Demand	Panel Totals	
HVAC	129700 VA	100.00%	129700 VA		
				Total Conn. Load:	129700 VA
				Total Est. Demand:	129700 VA
				Total Conn.:	156 A
				Total Est. Demand:	156 A

Notes:
1. PROVIDE SUBFEED LUGS

Branch Panel: 1P1

Location: ELECTRICAL 104D **Volts:** 120/208 Wye **A.I.C. Rating:** 10 K
Supply From: DP **Phases:** 3 **Mains Type:**
Mounting: SURFACE **Wires:** 4 **Mains Rating:** 225 A
Enclosure: Type 1 **MCB Rating:**

CKT	Circuit Description	Trip	Poles	A		B		C		Poles	Trip	Circuit Description	CKT
1	Outlet RECEPTION 111/WAITING 111E	20 A	1	1260	1260					1	20 A	Outlet Space 16	2
3	Outlet OFFICE 111J/111K	20 A	1			1440	1080			1	20 A	Outlet OFFICE-2 103J-2	4
5	Outlet OFFICE 111G/111H	20 A	1					1080	1620	1	20 A	Outlet Space 16	6
7	Outlet OFFICE 111D/111F	20 A	1	1440	1440					1	20 A	Outlet OFFICE-2 103G-2	8
9	Outlet OFFICE-2 111C-2	20 A	1			1440	900			1	20 A	Outlet OFFICE-2 103D-2	10
11	Outlet OFFICE-2 110G-2	20 A	1					1260	1440	1	20 A	Outlet OFFICE-2 103B-2	12
13	Outlet OFFICE-2 110E-2	20 A	1	1260	720					1	20 A	Outlet CORRIDOR-2 100-2	14
15	Outlet OFFICE-2 110C-2	20 A	1			1080	1440			1	20 A	Outlet RECEPTION-2 102F-2	16
17	Outlet STORAGE-2 110H-2	20 A	1					900	1620	1	20 A	Outlet CONFERENCE-2 102H-2	18
19	Outlet RECEPTION-2 110-2	20 A	1	900	1080					1	20 A	Outlet OFFICE-2 102E-2	20
21	Outlet OFFICE-2 110A-2	20 A	1			540	900			1	20 A	Outlet OFFICE-2 102C-2	22
23	Outlet LOUNGE-WOMEN-2 105-2	20 A	1					1260	1080	1	20 A	Outlet OFFICE-2 102A-2	24
25	Outlet CORRIDOR-2 100-2	20 A	1	1260	720					1	20 A	Outlet OPEN OFFICE-2 102-2	26
27	VENDING OUTLET	20 A	1			360	900			1	20 A	Outlet RECEPTION-2 101-2	28
29	VENDING OUTLET	20 A	1					360	1080	1	20 A	Outlet OFFICE-2 101A-2	30
31	VENDING OUTLET	20 A	1	360	360					1	20 A	Outlet CUSTODIAL-2 104B-2	32
33	Outlet CONFERENCE-2 103K-2	20 A	1			720	360			1	20 A	Outlet CUSTODIAL-2 104B-2	34
35	Outlet CUSTODIAL-2 104B-2	20 A	1					360	720	1	20 A	Outlet MECHANICAL-2 104C-2	36
37	Outlet MECHANICAL 113B	20 A	1	720	0					3	60 A	SPD	38
39	Outlet ELECTRICAL 104D	20 A	1			540	0			--	--	--	40
41	Spare	0 A	1					0	0	--	--	--	42
			Total Load:	12780 VA		11700 VA		12780 VA					
			Total Amps:	108 A		98 A		108 A					

Legend:

Load Classification	Connected Load	Demand Factor	Estimated Demand	Panel Totals	
Outlet	37260 VA	63.42%	23630 VA		
				Total Conn. Load:	37260 VA
				Total Est. Demand:	23630 VA
				Total Conn.:	103 A
				Total Est. Demand:	66 A

Notes:
1. PROVIDE SUBFEED LUGS

Branch Panel: M2

Location: MECHANICAL 113 **Volts:** 480/277 Wye **A.I.C. Rating:** 35 K
Supply From: MDP **Phases:** 3 **Mains Type:**
Mounting: SURFACE **Wires:** 4 **Mains Rating:** 225 A
Enclosure: Type 1 **MCB Rating:**

CKT	Circuit Description	Trip	Poles	A		B		C		Poles	Trip	Circuit Description	CKT
1	ERV-1	30 A	3	6512	2015					3	20 A	P-1	2
3	--	--	--			6512	2015			--	--	--	4
5	--	--	--					6512	2015	--	--	--	6
7	Spare	20 A	3	0	2015					3	20 A	P-2	8
9	--	--	--			0	2015			--	--	--	10
11	--	--	--					0	2015	--	--	--	12
13	Spare	30 A	3	0	0					3	20 A	Spare	14
15	--	--	--			0	0			--	--	--	16
17	--	--	--					0	0	--	--	--	18
19	Space	--	--	0	0					--	--	Space	20
21	Space	--	--			0	0			--	--	Space	22
23	Space	--	--					0	0	--	--	Space	24
25	Space	--	--	0	0					--	--	Space	26
27	Space	--	--			0	0			--	--	Space	28
29	Space	--	--					0	0	--	--	Space	30
31	Space	--	--	0	0					--	--	Space	32
33	Space	--	--			0	0			--	--	Space	34
35	Space	--	--					0	0	--	--	Space	36
37	Space	--	--	0	0					--	--	Space	38
39	Space	--	--			0	0			--	--	Space	40
41	Space	--	--					0	0	--	--	Space	42
			Total Load:	10542 VA		10542 VA		10542 VA					
			Total Amps:	38 A		38 A		38 A					

Legend:

Load Classification	Connected Load	Demand Factor	Estimated Demand	Panel Totals	
Other	12090 VA	100.00%	12090 VA		
Power	19537 VA	100.00%	19537 VA	**Total Conn. Load:**	31627 VA
				Total Est. Demand:	31627 VA
				Total Conn.:	38 A
				Total Est. Demand:	38 A

Notes:

Branch Panel: 1P2

Location: ELECTRICAL 104D **Volts:** 120/208 Wye **A.I.C. Rating:** 10 K
Supply From: DP **Phases:** 3 **Mains Type:**
Mounting: SURFACE **Wires:** 4 **Mains Rating:** 225 A
Enclosure: Type 1 **MCB Rating:**

CKT	Circuit Description	Trip	Poles	A		B		C		Poles	Trip	Circuit Description	CKT
1	WH-1	30 A	2	2500	751					2	20 A	VRF 101-103G	2
3	--	--	--			2500	751			--	--	--	4
5	WH-2	30 A	2					2500	583	2	20 A	VRF, BC-1A, BC-1B	6
7	--	--	--	2500	583					--	--	--	8
9	EF-1	20 A	1			180	971			2	20 A	VRF, BC-2A, BC-2B	10
11	POWER POLE RECEPTION 111	20 A	1					0	971	--	--	--	12
13	POWER POLE RECEPTION 110	20 A	1	0	0					2	20 A	Spare	14
15	POWER POLES Space 16	20 A	1			0	0			--	--	--	16
17	Level 1 Cove Lights	20 A	1					144	0	2	30 A	Spare	18
19	Spare	20 A	1	0	0					--	--	--	20
21	Spare	20 A	1			0	0			1	20 A	Spare	22
23	Spare	20 A	1					0	0	1	20 A	Spare	24
25	Spare	20 A	1	0	0					1	20 A	Spare	26
27	Spare	20 A	1			0	0			1	20 A	Spare	28
29	Spare	20 A	1					0	0	1	20 A	Spare	30
31	Spare	20 A	1	0	0					1	20 A	Spare	32
33	Spare	20 A	1			0	0			1	20 A	Spare	34
35	Spare	20 A	1					0	0	1	20 A	Spare	36
37	Spare	20 A	1	0	0					1	20 A	Spare	38
39	Spare	20 A	1			0	0			1	20 A	Spare	40
41	Spare	20 A	1					0	0	1	20 A	Spare	42
			Total Load:	6334 VA		4402 VA		4198 VA					
			Total Amps:	53 A		37 A		35 A					

Legend:

Load Classification	Connected Load	Demand Factor	Estimated Demand	Panel Totals	
HVAC	4789 VA	100.00%	4789 VA		
Lighting	0 VA	0.00%	0 VA	**Total Conn. Load:**	14933 VA
Other	144 VA	100.00%	144 VA	**Total Est. Demand:**	14933 VA
Power	10000 VA	100.00%	10000 VA	**Total Conn.:**	41 A
				Total Est. Demand:	41 A

Notes:

SANDERS ASSOCIATES ARCHITECTS
2668 Grant Avenue
Ogden, UT 84401
P : 801.621.7303
www.sandersarch.com

Seal

Consultant

E.C.E. LLC
Electrical Consulting Engineers
939 So. West Temple
Salt Lake City, Utah 84101
Telephone (801) 521-8007
Email: Admin@eceonline.com

Project Name

WSU- MILLER ADMINISTRATION
MEP Upgrades and Remodel
3848 HARRISON BLVD.
OGDEN, UTAH 84401

Issued

No.	Date	Description
1	01.16.15	DFCM PLAN REVIEW
1	02.03.15	BID DOCUMENTS

Revision

No.	Date	Description

DFCM Project No. 14031810
ECE Project No. 4703

Drawing Title

PANEL SCHEDULES

Sheet Number

EE005

Branch Panel: 2H

Location: MECHANICAL 212C
Supply From: MDP
Mounting: SURFACE
Enclosure: Type 1
Volts: 480/277 Wye
Phases: 3
Wires: 4
A.I.C. Rating: 22 K
Mains Type:
Mains Rating: 400 A
MCB Rating: 400 A

CKT	Circuit Description	Trip	Poles	A		B		C		Poles	Trip	Circuit Description	CKT
1	Lighting Corridor 203-2	20 A	1	4179	3290					1	20 A	Lighting	2
3	Lighting	20 A	1			3330	2810			1	20 A	Lighting Corridor 301-2	4
5	Lighting	20 A	1					3073	3493	1	20 A	Lighting	6
7	Lighting	20 A	1	2689	2968					1	20 A	Lighting	8
9	Lighting Room 100	20 A	1			2048	0			1	20 A	Spare	10
11	Spare	20 A	1					0	0	1	20 A	Spare	12
13	Spare	20 A	1	0	0					1	20 A	Spare	14
15	Spare	20 A	1			0	0			--	--	Space	16
17	Spare	20 A	1					0	0	--	--	Space	18
19	Spare	20 A	1	0	0					--	--	Space	20
21	Spare	20 A	1			0	0			--	--	Space	22
23	Spare	20 A	1					0	0	--	--	Space	24
25	Spare	20 A	1	0	0					--	--	Space	26
27	Spare	20 A	1			0	0			--	--	Space	28
29	Spare	20 A	1					0	0	--	--	Space	30
31	Spare	20 A	1	0	0					--	--	Space	32
33	Spare	20 A	1			0	0			--	--	Space	34
35	Spare	20 A	1					0	0	--	--	Space	36
37	Spare	20 A	1	0	0					--	--	Space	38
39	Spare	20 A	1			0	0			--	--	Space	40
41	Spare	20 A	1					0	0	--	--	Space	42
			Total Load:	13126 VA		8188 VA		6566 VA					
			Total Amps:	48 A		30 A		24 A					

Legend:

Load Classification	Connected Load	Demand Factor	Estimated Demand	Panel Totals	
Lighting	27909 VA	100.00%	27909 VA		
Other	0 VA	0.00%	0 VA	**Total Conn. Load:**	27909 VA
				Total Est. Demand:	27909 VA
				Total Conn.:	34 A
				Total Est. Demand:	34 A

Notes:

MAIN DISTRIBUTION PANELBOARD

SEC.	CCT BRKR SIZE	POLE	EQUIPMENT OR AREA SERVED	REMARKS
1	800	3	MAIN	
2	70	3	GUARD SHED	
3	200	3	FOUNTAIN PUMP STATION	
4	150	3	AUTOMATIC TRANSFER SWITCH	
5	100	3	PANEL "2H"	
6	225	3	PANEL "M1" & "M2"	
7	175	3	PANEL "DP"	
8	100	3	ELEVATOR	
9	100	3	SPARE	
10	60	3	SURGE PROTECTIVE DEVICE	
11	100	3	SPARE	
12	100	3	SPARE	
13	175	3	SPARE	
14	150	3	SPARE	
15		3	SPACE	
16		3	SPACE	
17		3	SPACE	
18		3	SPACE	
19		3	SPACE	
20		3	SPACE	

MAIN DISTRIBUTION PANELBOARD TO BE 800 AMP., 3 PHASE, 277/480 VOLTS WITH FULL NEUTRAL AND HALF SIZE GROUND BUS. PANELBOARD SHALL BE BRACED FOR MINIMUM OF 35,000 AIC.

Branch Panel: 3P1

Location: ELECTRICAL 314E
Supply From: DP
Mounting: SURFACE
Enclosure: Type 1
Volts: 120/208 Wye
Phases: 3
Wires: 4
A.I.C. Rating: 10 K
Mains Type:
Mains Rating: 225 A
MCB Rating:

CKT	Circuit Description	Trip	Poles	A		B		C		Poles	Trip	Circuit Description	CKT
1	Outlet	20 A	1	180	1080					1	20 A	Outlet CORRIDOR-2 301-2	2
3	Outlet RECEPTION-2 306-2	20 A	1			720	900			1	20 A	Outlet RECEPTION-2 306-2	4
5	Outlet CONFERENCE-2 307C-2	20 A	1					1080	1080	1	20 A	Outlet OFFICE-2 307B-2	6
7	Outlet OFFICE-2 306E-2	20 A	1	720	1080					1	20 A	Outlet OFFICE-2 306C-2	8
9	Outlet OFFICE-2 306A-2	20 A	1			1260	1260			1	20 A	Outlet OFFICE-2 303A-2	10
11	Outlet CONFERENCE-2 302A-2	20 A	1					1080	1800	1	20 A	Outlet RECEPTION-2 302-2	12
13	Outlet UNISEX-2 302C-2	20 A	1	180	720					1	20 A	Outlet WORKROOM-2 302D-2	14
15	Outlet CONFERENCE-2 319-2	20 A	1			720	720			1	20 A	Outlet CONFERENCE-2 319-2	16
17	Outlet WORKROOM-2 318-2	20 A	1					540	1260	1	20 A	Outlet OFFICE-2 317-2	18
19	Outlet OFFICE-2 316G-2	20 A	1	1080	720					1	20 A	Outlet PROJECT ROOM-2 316H-2	20
21	Outlet PROJECT ROOM-2 316H-2	20 A	1			1980	900			1	20 A	Outlet	22
23	Outlet OFFICE-2 316E-2	20 A	1					1080	1440	1	20 A	Outlet OFFICE-2 316A-2	24
25	Outlet OFFICE-2 316C-2	20 A	1	900	1080					1	20 A	Outlet OFFICE-2 313B-2	26
27	Outlet OFFICE-2 308G-2	20 A	1			1620	1260			1	20 A	Outlet OFFICE-2 308E-2	28
29	Outlet OFFICE-2 308C-2	20 A	1					1080	540	1	20 A	Outlet OFFICE-2 308A-2	30
31	Outlet RECEPTION-2 308-2	20 A	1	1080	540					1	20 A	Outlet FLOOR CONFERENCE 319	32
33	Spare	20 A	1			0	180			1	20 A	Outlet CORR. 301 Drinking Fountain	34
35	Spare	20 A	1					0	0	1	20 A	Spare	36
37	SPD	60 A	3	0	0					1	20 A	Spare	38
39	--	--	--			0	0			1	20 A	Spare	40
41	--	--	--					0	0	1	20 A	Spare	42
			Total Load:	9360 VA		11520 VA		10980 VA					
			Total Amps:	78 A		98 A		94 A					

Legend:

Load Classification	Connected Load	Demand Factor	Estimated Demand	Panel Totals	
Power	1080 VA	100.00%	1080 VA		
Outlet	30780 VA	66.24%	20390 VA	**Total Conn. Load:**	31860 VA
				Total Est. Demand:	21470 VA
				Total Conn.:	88 A
				Total Est. Demand:	60 A

Notes:
1. PROVIDE SUBFEED LUGS

Branch Panel: 2P1

Location: MECHANICAL 212C
Supply From: DP
Mounting: SURFACE
Enclosure: Type 1
Volts: 120/208 Wye
Phases: 3
Wires: 4
A.I.C. Rating: 10 K
Mains Type:
Mains Rating: 225 A
MCB Rating:

CKT	Circuit Description	Trip	Poles	A		B		C		Poles	Trip	Circuit Description	CKT
1	IT Rack 20A. Outlet	20 A	2	1250	1440					1	20 A	Outlet OFFICE-2 204R-2	2
3	--	--	--			1250	1080			1	20 A	Outlet RECEPTION-2 204K-2	4
5	IT Rack 20A. Outlet	20 A	2					1250	1620	1	20 A	Outlet OFFICE-2 204P-2	6
7	--	--	--	1250	1440					1	20 A	Outlet OFFICE-2 204G-2	8
9	Outlet ELECTRICAL-2 212E-2	20 A	1			540	1620			1	20 A	Outlet HALL-2 204U-2	10
11	Spare	20 A	1					0	900	1	20 A	Outlet OFFICE-2 204E-2	12
13	Outlet CORRIDOR-2 203-2	20 A	1	1080	1080					1	20 A	Outlet OFFICE-2 204C-2	14
15	Outlet WOMEN-2 206-2	20 A	1			1620	720			1	20 A	Outlet OFFICE-2 204A-2	16
17	Outlet	20 A	1					900	1620	1	20 A	Power OFFICE SUITE 207B	18
19	Outlet OFFICE-2 207F-2	20 A	1	900	0					1	20 A	Spare	20
21	Outlet OFFICE-2 207D-2	20 A	1			1080	0			1	20 A	Spare	22
23	Outlet CONFERENCE-2 207A-2	20 A	1					540	0	1	20 A	Spare	24
25	Outlet	20 A	1	1080	0					1	20 A	Spare	26
27	Outlet OFFICE-2 204S-2	20 A	1			720	0			1	20 A	Spare	28
29	Outlet OFFICE-2 204S-2	20 A	1					1080	0	1	20 A	Spare	30
31	Outlet	20 A	1	900	0					1	20 A	Spare	32
33	Outlet	20 A	1			360	0			1	20 A	Spare	34
35	Outlet OFFICE-2 204Q-2	20 A	1					1440	0	1	20 A	Spare	36
37	Spare	60 A	3	0	0					1	20 A	Spare	38
39	--	--	--			0	0			1	20 A	Spare	40
41	--	--	--					0	0	1	20 A	Spare	42
			Total Load:	10420 VA		8990 VA		9350 VA					
			Total Amps:	87 A		75 A		78 A					

Legend:

Load Classification	Connected Load	Demand Factor	Estimated Demand	Panel Totals	
Power	6620 VA	100.00%	6620 VA		
Outlet	22140 VA	72.58%	16070 VA	**Total Conn. Load:**	28760 VA
				Total Est. Demand:	22690 VA
				Total Conn.:	80 A
				Total Est. Demand:	63 A

Notes:
1. PROVIDE SUBFEED LUGS

Branch Panel: 3P2

Location: ELECTRICAL 314E
Supply From: DP
Mounting: SURFACE
Enclosure: Type 1
Volts: 120/208 Wye
Phases: 3
Wires: 4
A.I.C. Rating: 10 K
Mains Type:
Mains Rating: 225 A
MCB Rating:

CKT	Circuit Description	Trip	Poles	A		B		C		Poles	Trip	Circuit Description	CKT
1	HVAC MECHANICAL 314C	20 A	2	520	0					2	20 A	Spare	2
3	--	--	--			520	0			--	--	--	4
5	Spare	20 A	2					0	0	2	20 A	Spare	6
7	--	--	--	0	0					--	--	--	8
9	HVAC OFFICE-2 306C-2	20 A	2			655	1466			2	20 A	HVAC CORRIDOR-2 301-2	10
11	--	--	--					655	1466	--	--	--	12
13	Spare	20 A	1	0	192					1	20 A	Level 3 Cove Lights	14
15	Spare	20 A	1			0	0			1	20 A	Spare	16
17	Spare	20 A	1					0	0	1	20 A	Spare	18
19	Spare	20 A	1	0	0					1	20 A	Spare	20
21	Spare	20 A	1			0	0			1	20 A	Spare	22
23	Spare	20 A	1					0	0	1	20 A	Spare	24
25	Spare	20 A	1	0	0					1	20 A	Spare	26
27	Spare	20 A	1			0	0			1	20 A	Spare	28
29	Spare	20 A	1					0	0	1	20 A	Spare	30
31	Spare	20 A	1	0	0					1	20 A	Spare	32
33	Spare	20 A	1			0	0			1	20 A	Spare	34
35	Spare	20 A	1					0	0	1	20 A	Spare	36
37	Spare	20 A	1	0	0					1	20 A	Spare	38
39	Spare	20 A	1			0	0			1	20 A	Spare	40
41	Spare	20 A	1					0	0	1	20 A	Spare	42
			Total Load:	712 VA		2640 VA		2120 VA					
			Total Amps:	6 A		24 A		19 A					

Legend:

Load Classification	Connected Load	Demand Factor	Estimated Demand	Panel Totals	
HVAC	5280 VA	100.00%	5280 VA		
Lighting	0 VA	0.00%	0 VA	**Total Conn. Load:**	5472 VA
Other	192 VA	100.00%	192 VA	**Total Est. Demand:**	5472 VA
				Total Conn.:	15 A
				Total Est. Demand:	15 A

Notes:

Branch Panel: 2P2

Location: MECHANICAL 212C
Supply From: DP
Mounting: SURFACE
Enclosure: Type 1
Volts: 120/208 Wye
Phases: 3
Wires: 4
A.I.C. Rating: 10 K
Mains Type:
Mains Rating: 225 A
MCB Rating:

CKT	Circuit Description	Trip	Poles	A		B		C		Poles	Trip	Circuit Description	CKT
1	Outlet OFFICE-2 214A-2	20 A	1	1260	720					1	20 A	Outlet Space 315-3	2
3	Outlet OFFICE-2 214C-2	20 A	1			1260	900			1	20 A	Outlet CORRIDOR-2 211-2	4
5	Outlet OFFICE-2 211C-2	20 A	1					720	1800	1	20 A	Outlet OFFICE-2 211F-2	6
7	Outlet OFFICE-2 211E-2	20 A	1	1800	1080					1	20 A	Outlet CONFERENCE-2 211K-2	8
9	Outlet OFFICE-2 211J-2	20 A	1			1800	1260			1	20 A	Outlet OFFICE-2 210K-2	10
11	Outlet OFFICE-2 210J-2	20 A	1					900	1620	1	20 A	Outlet WORKROOM-2 210H-2	12
13	Outlet OFFICE-2 210G-2	20 A	1	1440	720					1	20 A	Outlet OFFICE-2 210D-2	14
15	Outlet	20 A	1			1260	540			1	20 A	Outlet WORKROOM-2 210A-2	16
17	Outlet WORKROOM-2 210A-2	20 A	1					900	720	1	20 A	Outlet OFFICE-2 210B-2	18
19	HVAC MECHANICAL 212C	20 A	2	520	500					2	20 A	Power CUSTODIAL 212B	20
21	--	--	--			520	500			--	--	--	22
23	Spare	20 A	2					0	500	2	30 A	Power CUSTODIAL 212B Dryer	24
25	--	--	--	0	500					--	--	--	26
27	HVAC	20 A	2			1396	1040			2	30 A	HVAC CORRIDOR-2 203-2 Dryer	28
29	--	--	--					1396	1040	--	--	--	30
31	Spare	20 A	1	0	360					1	20 A	Outlet CUSTODIAL 212B	32
33	Spare	20 A	1			0	180			1	20 A	Outlet CORR. 203 - Drinking Fountain	34
35	Spare	20 A	1					0	192	1	20 A	Level 2 Cove Lights	36
37	Spare	20 A	1	0	0					1	20 A	Spare	38
39	Spare	20 A	1			0	0			1	20 A	Spare	40
41	Spare	20 A	1					0	0	1	20 A	Spare	42
			Total Load:	8900 VA		10656 VA		9788 VA					
			Total Amps:	74 A		90 A		83 A					

Legend:

Load Classification	Connected Load	Demand Factor	Estimated Demand	Panel Totals	
HVAC	5912 VA	100.00%	5912 VA		
Lighting	0 VA	0.00%	0 VA	**Total Conn. Load:**	29344 VA
Other	192 VA	100.00%	192 VA	**Total Est. Demand:**	23724 VA
Power	2000 VA	100.00%	2000 VA	**Total Conn.:**	81 A
Outlet	21240 VA	73.54%	15620 VA	**Total Est. Demand:**	66 A

Notes:

SANDERS ASSOCIATES ARCHITECTS
2668 Grant Avenue
Ogden, UT 84401
P : 801.621.7303
www.sandersarch.com

Seal

Consultant
E.C.E. LLC
Electrical Consulting Engineers
939 So. West Temple
Salt Lake City, Utah 84101
Telephone (801) 521-8007
Email: Admin@eceonline.com

Project Name

WSU- MILLER ADMINISTRATION

MEP Upgrades and Remodel

3848 HARRISON BLVD.
OGDEN, UTAH 84401

Issued

No.	Date	Description
1	01.16.15	DFCM PLAN REVIEW
1	02.03.15	BID DOCUMENTS

Revision

No.	Date	Description

DFCM Project No. 14031810
ECE Project No. 4703

Drawing Title

PANEL SCHEDULES

Sheet Number

EE006

Branch Panel: DP

Location: ELECTRICAL 104D
Supply From:
Mounting: SURFACE
Enclosure: Type 1

Volts: 120/208 Wye
Phases: 3
Wires: 4

A.I.C. Rating: 10 K
Mains Type:
Mains Rating: 400 A
MCB Rating:

CKT	Circuit Description	Trip	Poles	A		B		C		Poles	Trip	Circuit Description	CKT
1	PANEL "1P1"	150 A	3	19114	0					3	150 A	Spare	2
3	--	--	--			16102	0			--	--	--	4
5	--	--	--					16978	0	--	--	--	6
7	PANEL "2P1"	150 A	3	19320	0					3	150 A	Spare	8
9	--	--	--			19646	0			--	--	--	10
11	--	--	--					19138	0	--	--	--	12
13	PANEL "3P1"	150 A	3	10072	0					3	20 A	Spare	14
15	--	--	--			14160	0			--	--	--	16
17	--	--	--					13100	0	--	--	--	18
19	Spare	30 A	3	0	0					--	--	Space	20
21	--	--	--			0	0			--	--	Space	22
23	--	--	--					0	0	--	--	Space	24
25	Space	--	--	0	0					--	--	Space	26
27	Space	--	--			0	0			--	--	Space	28
29	Space	--	--					0	0	--	--	Space	30
31	Space	--	--	0	0					--	--	Space	32
33	Space	--	--			0	0			--	--	Space	34
35	Space	--	--					0	0	--	--	Space	36
37	SPD	60 A	3	0	0					--	--	Space	38
39	--	--	--			0	0			--	--	Space	40
41	--	--	--					0	0	--	--	Space	42
		Total Load:		48506 VA		49908 VA		49216 VA					
		Total Amps:		404 A		417 A		411 A					

Legend:

Load Classification	Connected Load	Demand Factor	Estimated Demand	Panel Totals	
HVAC	15981 VA	100.00%	15981 VA		
Lighting	0 VA	0.00%	0 VA	**Total Conn. Load:**	147629 VA
Other	528 VA	100.00%	528 VA	**Total Est. Demand:**	96919 VA
Power	19700 VA	100.00%	19700 VA	**Total Conn.:**	410 A
Outlet	111420 VA	54.49%	60710 VA	**Total Est. Demand:**	269 A

Notes:

Branch Panel: EH

Location: ELECTRICAL 104D
Supply From: MDP
Mounting: SURFACE
Enclosure: Type 1

Volts: 480/277 Wye
Phases: 3
Wires: 4

A.I.C. Rating: 22 K
Mains Type:
Mains Rating: 150 A
MCB Rating:

CKT	Circuit Description	Trip	Poles	A		B		C		Poles	Trip	Circuit Description	CKT
1	PANEL "EP" (T2)	50 A	3	3940	2257					1	20 A	1st Level Emergency Lights	2
3	--	--	--			4310	2329			1	20 A	2nd Level Emergency Lights	4
5	--	--	--					1641	1620	1	20 A	3rd Level Emergency Lights	6
7	Elevator CAB Lights	20 A	3	1667	949					1	20 A	Stairs & Restrrom Emergency Lights	8
9	--	--	--			1667	0			1	20 A	Spare	10
11	--	--	--					1667	0	1	20 A	Spare	12
13	ELEVATOR LIGHTS	20 A	1	192	0					1	20 A	Spare	14
15	Spare	20 A	1			0	0			1	20 A	Spare	16
17	Spare	20 A	1					0	0	1	20 A	Spare	18
19	Spare	20 A	1	0	0					1	20 A	Spare	20
21	Spare	20 A	1			0	0			1	20 A	Spare	22
23	Spare	20 A	1					0	0	1	20 A	Spare	24
25	SPD	60 A	3	0	0					1	20 A	Spare	26
27	--	--	--			0	0			1	20 A	Spare	28
29	--	--	--					0	0	1	20 A	Spare	30
		Total Load:		9205 VA		8306 VA		4928 VA					
		Total...		35 A		32 A		18 A					

Legend:

Load Classification	Connected Load	Demand Factor	Estimated Demand	Panel Totals	
HVAC	5000 VA	100.00%	5000 VA		
Lighting	7567 VA	100.00%	7567 VA	**Total Conn. Load:**	22458 VA
Other	31 VA	100.00%	31 VA	**Total Est. Demand:**	22458 VA
Power	5900 VA	100.00%	5900 VA	**Total Conn.:**	27 A
Outlet	1440 VA	100.00%	1440 VA	**Total Est. Demand:**	27 A
Fire Alarm	2520 VA	100.00%	2520 VA		

Notes:

MECHANICAL EQUIPMENT SCHEDULE

NAME OF MECHANICAL EQUIPMENT	ENERGY RECOVERY VENTILATOR	EXHAUST FAN	VRF OUTDOOR UNIT		VRF OUTDOOR UNIT		WATER HEATER	VRF BRANCH CONTROLLER	VRF BRANCH CONTROLLER	VRF INDOOR UNIT	VRF INDOOR UNIT	VRF INDOOR UNING	VRF INDOOR UNIT	VRF INDOOR UNIT	VRF INDOOR UNIT	VRF INDOOR UNIT	VRF INDOOR UNIT	VRF INDOOR UNIT	PUMP
EQUIPMENT NO.	ERV-1	EF-1	HP-1,2		HP-3,4,5,6		WH-1,2	BC-1A, 2A, 3A, 4A, 5A, 6A	BC-1B, 2B, 3B, 4B, 5B, 6B	VRF-101, 102.1, 102.2, 102C, 102D, 102E, 102G, 102H, 103A, 103B, 103C, 103D, 103E, 103G, 103H, 103J, 104, 104B, 104D, 105, 107, 109, 110A, 110B, 110C, 110D, 110E, 110F, 110G, 110J, 111A, 111C, 111D, 111F, 111G, 111K, 113, 204A, 204B, 204C, 204D, 204E, 204J, 204M, 204P, 204Q, 204R, 204S, 206, 207, 207D, 207E, 207F, 210A, 210E, 210H, 210K, 211, 211C, 211F, 211H, 212B, 212E, 213, 214, 214A, 214B, 214C, 302B, 303, 305, 307, 308G, 313A, 314B, 314E, 315, 316A, 316H, 317, 317A, 318	VRF-101A, 102A, 102F, 103K, 111H, 111J, 113A, 204, 204F, 204G, 204K, 204N, 207A, 207C, 210, 210B, 210C, 210D, 210F, 210G, 210J, 211E, 211G, 211J, 211K, 211L, 214D, 303A, 304, 306A, 306B, 306C, 306D, 306E, 307A, 307B, 307C, 308A, 308C, 308F, 313B, 313C, 316, 316C, 316D, 316E, 316F, 316G	VRF-302A, 308B, 313	VRF-110	VRF-103, 111, 306, 308	VRF-302	VRF-100, 202, 209, 301, 319	VRF-207B	P-1,2
MOTOR DATA																			
RATING/WATTS	--	.17 HP	--	--	--	--	5 KW	--	--	--	--	--	--	--	--	--	--	--	5 HP
VOLTAGE	480	120	480	480	480	480	208	208	208	208	208	208	208	208	208	208	208	208	480
PHASE	3	1	3	3	3	3	1	1	1	1	1	1	1	1	1	1	1	1	3
AMPS	23.5	--	11	11	14	14	24	1.3	1.2	0.2	0.3	0.4	1.1	1.4	1.5	3.7	3.8	--	
WIRE SIZE	3#10	2#12	3#12	3#12	3#12	3#12	2#10	2#12	2#12	2#12	2#12	2#12	2#12	2#12	2#12	2#12	2#12	3#12	
GROUND WIRE	1#10	1#12	1#12	1#12	1#12	1#12	1#10	1#12	1#12	1#12	1#12	1#12	1#12	1#12	1#12	1#12	1#12	1#12	
CONDUIT SIZE	3/4"	3/4"	3/4"	3/4"	3/4"	3/4"	3/4"	3/4"	3/4"	3/4"	3/4"	3/4"	3/4"	3/4"	3/4"	3/4"	3/4"	3/4"	
FUSE DISC. SW.	30	--	30	30	30	30	--	--	--	--	--	--	--	--	--	--	--	30	
TYPE RKI FUSES	30	--	15	15	20	20	--	--	--	--	--	--	--	--	--	--	--	12	
NON-FUSE SW.	--	--	--	--	--	--	30	--	--	--	--	--	--	--	--	--	--	--	
NOTES	3,5	2	1	1	1	1	1	2	2	2	2	2	2	2	2	2	2	4	

NOTES:

1. STARTER IS FURNISHED WITH THE UNIT . PROVIDE SITE DISCONNECT.
2. PROVIDE 2-POLE THERMAL OVERLOAD SWITCH.
3. STARTER AND DISCONNECT IS PROVIDED WITH THE UNIT.
4. PROVIDE VFD.
5. TIE-INTO FIRE ALARM SYSTEM FOR AUTOMATIC OPERATION.

Branch Panel: EP

Location: ELECTRICAL 104D
Supply From: 30 kVA, 277 V/480 V, Thre...
Mounting: SURFACE
Enclosure: Type 1

Volts: 120/208 Wye
Phases: 3
Wires: 4

A.I.C. Rating: 10 K
Mains Type:
Mains Rating: 150 A
MCB Rating: 100 A

CKT	Circuit Description	Trip	Poles	A		B		C		Poles	Trip	Circuit Description	CKT
1	IT Equipment	30 A	2	1250	360					1	20 A	Outlet F.A.C.P.	2
3	--	--	--			1250	180			1	20 A	Outlet SECURITY PANEL	4
5	IT Equipment	30 A	2					1250	31	1	20 A	DOOR HOLDERS	6
7	--	--	--	1250	720					1	20 A	ADA Door Operators	8
9	Mechanical Room Elevator Outlet	20 A	1			180	1080			1	20 A	Fire Smoke Dampers	10
11	Elevator Pit Outlet	20 A	1					180	0	1	20 A	Spare	12
13	ATC PANEL	20 A	1	180	0					1	20 A	Spare	14
15	Fire Smoke Dampers	20 A	1			1440	0			1	20 A	Spare	16
17	Outlet ELECTRICAL 314E	20 A	1					180	0	1	20 A	Spare	18
19	Outlet ELECTRICAL 314E	20 A	1	180	0					1	20 A	Spare	20
21	Outlet ELECTRICAL 314E	20 A	1			180	0			1	20 A	Spare	22
23	Spare	30 A	2					0	0	1	20 A	Spare	24
25	--	--	--	0	0					1	20 A	Spare	26
27	Spare	20 A	2			0	0			1	20 A	Spare	28
29	--	--	--					0	0	1	20 A	Spare	30
31	Spare	30 A	2	0	0					1	20 A	Spare	32
33	--	--	--			0	0			1	20 A	Spare	34
35	Spare	20 A	1					0	0	1	20 A	Spare	36
37	SPD	60 A	3	0	0					1	20 A	Spare	38
39	--	--	--			0	0			1	20 A	Spare	40
41	--	--	--					0	0	1	20 A	Spare	42
		Total Load:		3940 VA		4310 VA		1641 VA					
		Total Amps:		36 A		39 A		14 A					

Legend:

Load Classification	Connected Load	Demand Factor	Estimated Demand	Panel Totals	
Other	31 VA	100.00%	31 VA		
Power	5900 VA	100.00%	5900 VA	**Total Conn. Load:**	9891 VA
Outlet	1440 VA	100.00%	1440 VA	**Total Est. Demand:**	9891 VA
Fire Alarm	2520 VA	100.00%	2520 VA	**Total Conn.:**	27 A
				Total Est. Demand:	27 A

Notes:

SANDERS ASSOCIATES ARCHITECTS
2668 Grant Avenue
Ogden, UT 84401
P : 801.621.7303
www.sandersarch.com

Seal

Consultant

E.C.E. LLC
Electrical Consulting Engineers
939 So. West Temple
Salt Lake City, Utah 84101
Telephone (801) 521-8007
Email: Admin@eceonline.com

Project Name

WSU- MILLER ADMINISTRATION

MEP Upgrades and Remodel

3848 HARRISON BLVD.
OGDEN, UTAH 84401

Issued

No.	Date	Description
1	01.16.15	DFCM PLAN REVIEW
1	02.03.15	BID DOCUMENTS

Revision

No.	Date	Description

DFCM Project No. 14031810
ECE Project No. 4703

Drawing Title

PANEL SCHEDULES

Sheet Number

EE007

FAULT CURRENT CALCULATIONS

FROM	TO	XFMR KVA	VOLTAGE	FLA	PF	Z	ISCA	LENGTH	# OF COND. /PHASE	PHASE SIZE	NEUTRAL SIZE	MULTIPLYER	M x ISCA	CONDUCTOR RESISTANCE	CONDUCTOR IMPEDANCE
EXISTING POWER TXFMR	MDP	500	277/480	800	--	--	31,037	100	3	500	500	0.827	25,657	0.089	0.141
MDP	M-1	--	277/480	225	--	--	25,657	8	3	4/0	4/0	0.953	24,456	0.207	0.262
M-1	M-2	--	277/480	225	--	--	24,456	8	3	4/0	4/0	0.955	23,363	0.207	0.262
MDP	TXFMR (PRIMARY)	112-1/2	277/480	N/A	--	--	25,657	30	3	2/0	2/0	0.795	20,391	0.33	0.36
TXFMR (PRIMARY)	TXFMR (SECONDARY)	112-1/2	120/208	N/A	97%	5.1%	20,391	N/A	N/A	N/A	N/A	0.310	6,312	N/A	N/A
TXFMR	DP	--	120/208	400	--	--	6,312	8	3	500	500	0.917	5,787	0.095	0.157
DP	1P1	--	120/208	150	--	--	5,787	8	3	2	2	0.959	5,547	0.66	0.66
1P1	1P2	--	120/208	150	--	--	5,547	8	3	2	2	0.960	5,326	0.66	0.66
DP	2P1	--	120/208	150	--	--	5,787	38	3	2	2	0.830	4,802	0.66	0.66
2P1	2P2	--	120/208	150	--	--	4,802	8	3	2	2	0.965	4,636	0.66	0.66
DP	3P1	--	120/208	150	--	--	5,787	26	3	2	2	0.877	5,074	0.66	0.66
3P1	3P2	--	120/208	150	--	--	5,074	8	3	2	2	0.964	4,889	0.66	0.66
MDP	2H	--	277/480	100	--	--	25,657	40	3	3	3	0.556	14,260	0.82	0.79
MDP	ATC	--	277/480	N/A	--	--	25,657	40	3	1/0	1/0	0.707	18,133	0.39	0.43
ATC	EH	--	277/480	150	--	--	18,133	30	3	1/0	1/0	0.820	14,864	0.39	0.43
EH	TXFMR (PRIMARY)	30	277/480	N/A	--	--	14,864	8	3	8	8	0.784	11,656	2.56	2.30
TXFMR (PRIMARY)	TXFMR (SECONDARY)	30	120/208	N/A	96.8%	5.2%	11,656	N/A	N/A	N/A	N/A	0.137	1,598	N/A	N/A
TXFMR	EP	--	120/208	100	--	--	1,598	8	3	3	3	0.977	1,562	0.82	0.79

REFERENCE NOTES :

1. FURNISH AND INSTALL A SURGE PROTECTION DEVICE. TIE TO A 60A., 3-POLE CIRCUIT BREAKER FOR A COMPLETE INSTALLATION.
2. TIE UFER GROUND CONDUCTOR TO GROUND CONDUCTOR BY THE TRANSFORMER PAD. EXOTHERMICALLY WELD THE CONNECTION. FIELD VERIFY EXACT LOCATION.
3. UFER AND GROUND RODS ARE INSTALLED UNDER A SEPARATE PROJECT AND CABLES ARE EXTENDED TO THE UTILITY TUNNEL. CONTRACTOR IS TO EXTEND THESE GROUND CONDUCTOR TO THE GROUND BUS BAR IN MAIN DISTRIBUTION PANEL. EXOTHERMICALLY WELD THE CONNECTION BETWEEN THE CABLES.
4. EXTEND EXISTING CONDUIT AND CONDUCTORS FOR THE GUARD STATION AND THE PUMP HOUSE TO NEW MAIN DISTRIBUTION PANELBOARD. PROVIDE CONDUIT AND CONDUCTORS FOR A COMPLETE INSTALLATION. FIELD VERIFY WORK INVOLVED PRIOR TO BID.
5. USE ONE OF THE EXISTING 30KVA TRANSFORMER.
6. PROVIDE DEMAND METERING (HAWKEYE #8100 OR APPROVED EQUAL) FOR PANEL "MDP" AND PANEL "M1". RUN A 1" CONDUIT TO CABLE TRAY. INSERT PULL STRING AND LABEL CONDUIT AS POWER LOGIC METERING. REFER TO SPECIFICATION FOR MORE INFORMATION.
7. INSTALL SALVAGED SPD NEXT TO THE PANEL AS CLOSE AS POSSIBLE. TIE THE SPD TO A 60 AMP. 3-POLE CIRCUIT BREAKER FOR A COMPLETE INSTALLATION.
8. CONDUIT WILL BE INSTALLED BETWEEN THE SECONDARY SIDE OF THE PAD MOUNTED TRANSFORMER AND UTILITY TUNNEL. CONTRACTOR IS TO EXTEND THESE CONDUITS TO THE NEW MAIN DISTRIBUTION PANEL AND INSTALL CONDUCTORS.

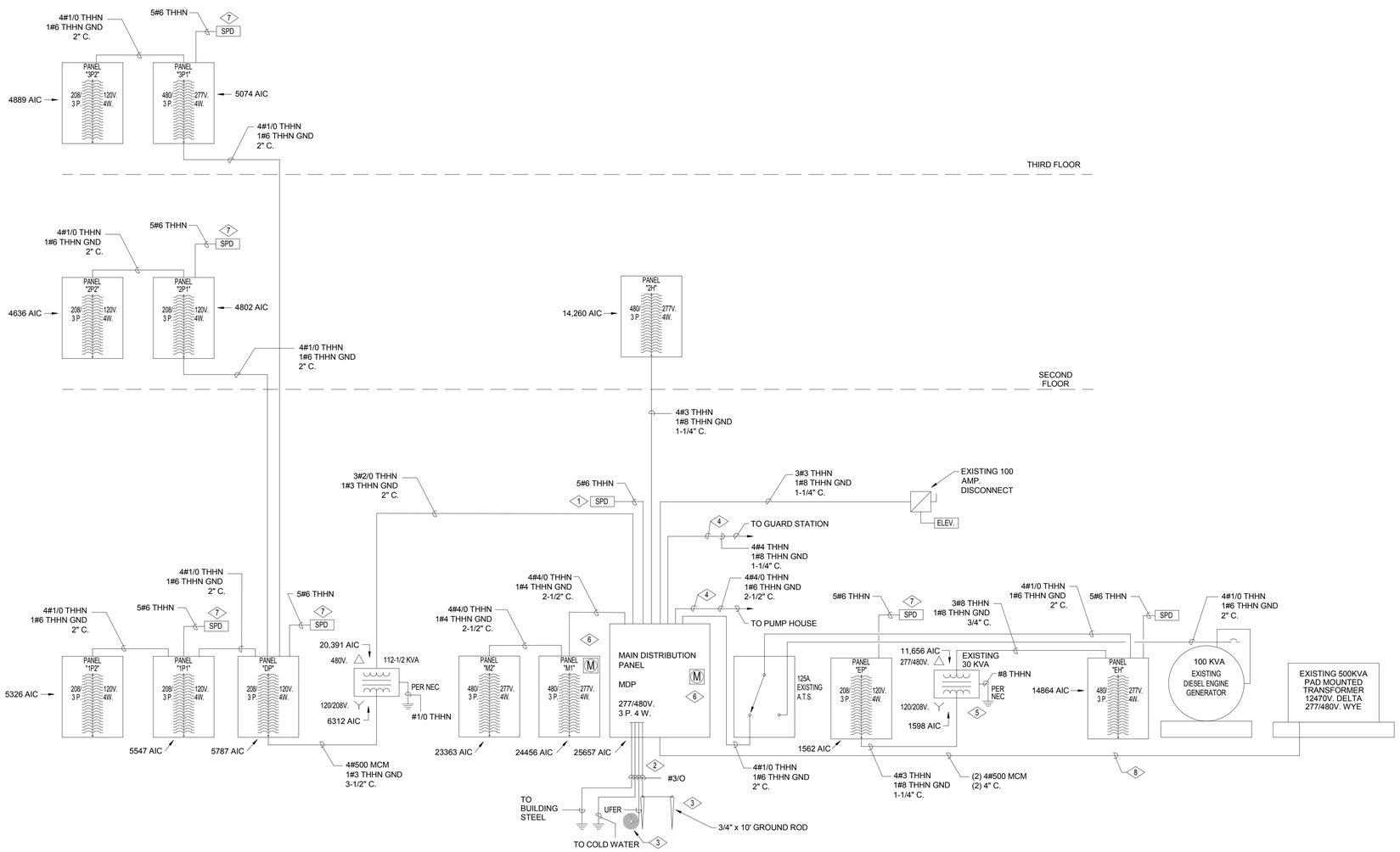

POWER SINGLE LINE DIAGRAM

SCALE: N.T.S.

SANDERS ASSOCIATES ARCHITECTS
2668 Grant Avenue
Ogden, UT 84401
P : 801.621.7303
www.sandersarch.com

Seal

Consultant

E.C.E. LLC
Electrical Consulting Engineers
939 So. West Temple
Salt Lake City, Utah 84101
Telephone (801) 521-8007
Email: Admin@eceonline.com

Project Name

WSU- MILLER ADMINISTRATION

MEP Upgrades and Remodel

3848 HARRISON BLVD.
OGDEN, UTAH 84401

Issued

No.	Date	Description
1	01.16.15	DFCM PLAN REVIEW
1	02.03.15	BID DOCUMENTS

Revision

No.	Date	Description

DFCM Project No. 14031810

ECE Project No. 4703

Drawing Title

POWER SINGLE LINE DIAGRAM

Sheet Number

EE008

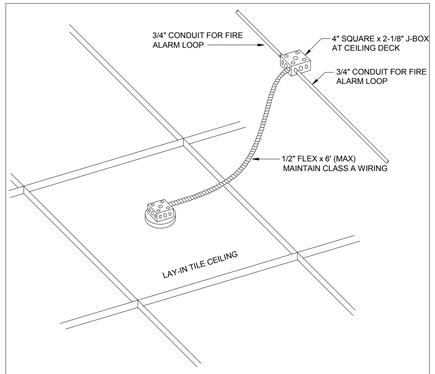

SCALE: N.T.S.

CONNECTIONS FOR SMOKE/HEAT DETECTORS IN LAY-IN CEILINGS

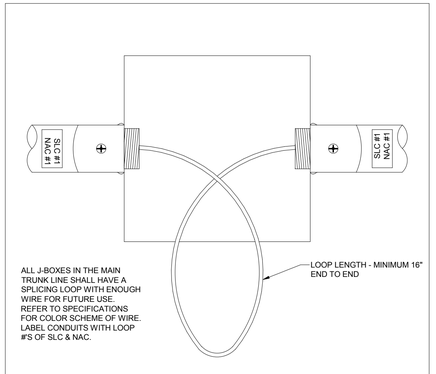

SCALE: N.T.S.

SPLICING LOOP DETAIL

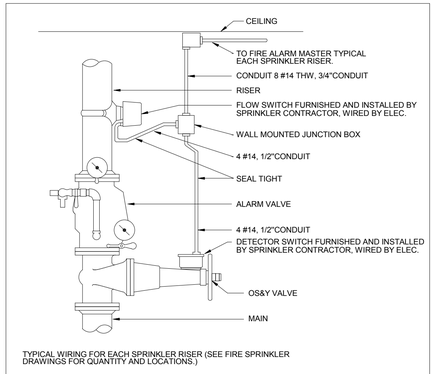

SCALE: N.T.S.

FIRE SPRINKLER CONNECTION DETAIL

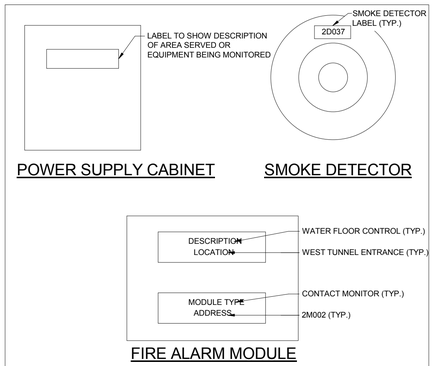

SCALE: N.T.S.

FIRE ALARM DEVICE LABEL DETAIL

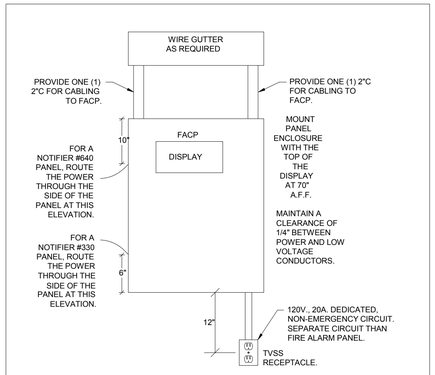

SCALE: N.T.S.

FIRE ALARM CONTROL PANEL ELEVATION DETAIL

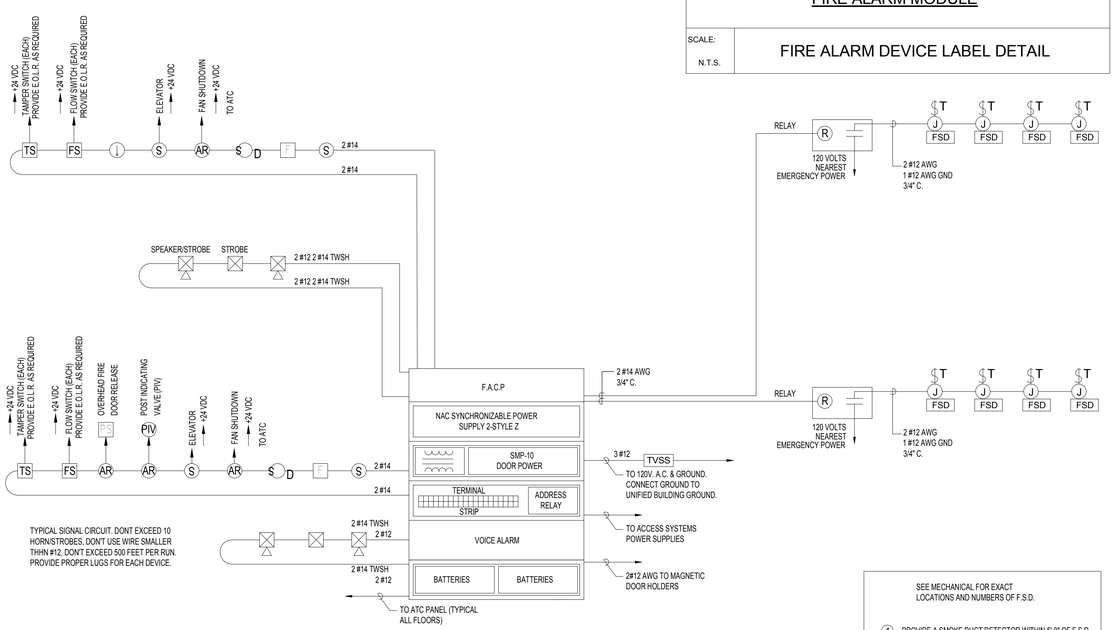

SEE MECHANICAL FOR EXACT LOCATIONS AND NUMBERS OF F.S.D.

1. PROVIDE A SMOKE DUCT DETECTOR WITHIN 5'-0" OF F.S.D.
2. TIE EACH F.S.D. TO A SINGLE 20A., 120V., CIRCUIT.

FIRE ALARM SINGLE LINE DIAGRAM

SCALE: N.T.S.

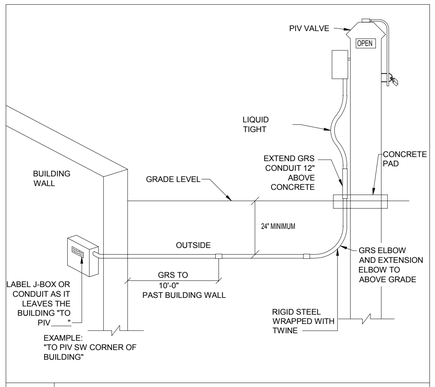

SCALE: N.T.S.

PIV CONNECTION DETAIL

FIRE ALARM SPECIAL NOTES:

1. DO NOT EXCEED 40 SPEAKERS BUT NOT TO EXCEED 60% OF THE CIRCUIT.
2. DO NOT EXCEED 500 FEET TOTAL WIRE LENGTH WITH #14.
3. DO NOT EXCEED 1000 FEET TOTAL WIRE LENGTH WITH #12.
4. FURNISH AND INSTALL BOOSTER POWER IN THE LOCATIONS WHERE TEMPER AND FLOW SWITCHES ARE LOCATED 20 FEET OR MORE FROM ADDRESSABLE TRANSMITTER.
5. ALL STROBES SHALL BE HIGH INTENSITY TO MEET ADA CODE REQUIREMENTS.
6. ALL FIRE ALARM J-BOXES SHALL BE PAINTED RED.
7. ALL FIRE ALARM CONDUIT SHALL HAVE THE COUPLINGS AND CONNECTORS PAINTED RED.
8. ALL NEW AIR HANDLING SYSTEMS IN THE ENTIRE BUILDING SHALL BE TIED TO NEW FIRE ALARM CONTROL PANEL FOR FAN SHUT DOWN DURING FIRE ALARM IN THE BUILDING. PROVIDE ADDRESSABLE RELAYS, MODULES, ETC. FOR A COMPLETE INSTALLATION.
9. ALL FIRE ALARM SYSTEM CONDUCTORS SHALL BE COLOR CODED.
10. DOOR HOLDER SHALL BE INSTALLED AT THE MOST RIGHT END OF THE DOOR.
11. FIRE ALARM SMOKE DETECTORS TO BE MOUNTED IN THE CENTER OF CEILING TILES.
12. NO SMOKE DETECTORS SHALL BE INSTALLED WITHIN 3 FEET OF AN AIR CONDITIONING OUTLET.
13. PROVIDE ONE ADDITIONAL 120 VOLT, 20 AMP. INDIVIDUAL CIRCUIT TO EACH S.D.C.P. IN EACH ELECTRICAL ROOM IN EACH WING ON EVERY LEVEL TO, CONTROL FSD UNITS. REFER TO THE MECHANICAL DRAWINGS FOR EXACT LOCATION AND NUMBER OF UNITS.
14. SMOKE DAMPER CONTROL PANELS SHALL BE TIED TO A NORMALLY CLOSED RELAY CONTACT IN THE F.A.C.P. TO OPERATE 120 VOLT, AC RELAYS IN THE S.D.C.P.
15. TERMINATION TO DEVICES AND CONTROL PANELS SHALL BE MADE USING SPACE FORK TERMINALS.
16. STORE FIRE ALARM EQUIPMENT IN A CLEAN, DRY PLACE AND PROTECT FROM PHYSICAL DAMAGE.
17. ALL CIRCUIT BREAKERS FEEDING FIRE ALARM CONTROL PANELS, DATA GATHERING PANELS, FIRE ALARM ANNUNCIATOR PANELS, FIRE ALARM DEVICES, ETC. SHALL BE COLORED RED.

PROVIDE:

a- 80% OF SMOKE DETECTORS PER CIRCUIT

b- 80% OF ALL OTHER ADDRESSABLE DEVICES PER CIRCUIT

c- 64% OF ALL NOTIFICATION DEVICES

d- ALL DGP'S SHALL BE INSTALLED IN THE ELECTRICAL ROOMS

e- ALL RELAYS FOR FIRE SMOKE DAMPER, ETC., SHALL CONSIST OF TWO RELAYS. ONE SLAVE AND ONE 20 AMPS RATED TO RUN REQUIRED TO REQUIRED DEVICES.

f- PROVIDE 120 VOLTS EMERGENCY POWER TO ALL PANELS PER MANUFACTURER REQUIREMENT.

g- THE RISER IS FOR INFORMATION PURPOSES ONLY. FIRE ALARM SUPPLIER TO PROVIDE ACCURATE DRAWING FOR APPROVAL.

h- FURNISH AND INSTALL INDIVIDUAL POWER SUPPLIES FOR DOOR HOLDERS ON EVERY LEVEL ON EACH EAST AND WEST SIDES.

NOTE:

1. IN AND OUT CABLES TO THE DEVICES MUST RUN IN A SEPARATE CONDUIT. 3/4" CONDUIT SHALL BE THE MINIMUM SIZE.
EXCEPTION:
A SINGLE 1/2" STEEL FLEXIBLE CONDUIT LESS THAN 6' LONG TO A SINGLE SMOKE DETECTOR, OR OTHER SINGLE ADDRESSABLE INITIATING DEVICE. THE ADDRESSABLE LOOP MAY FEED AND RETURN IN THE SAME 1/2" FLEXIBLE CONDUIT.

2. ALL FIRE ALARM DEVICES, CONTROL PANELS, REMOTE ANNUNCIATOR PANEL AND DATA GATHERING PANELS SHALL BE FURNISHED BY CONTRACTOR AND INSTALLED BY CONTRACTOR.

3. ALL PROGRAMMING SHALL BE DONE BY CONTRACTOR.

4. ALL LABELING TO BE DONE BY CONTRACTOR.

5. ALL WIRING TO BE DONE BY CONTRACTOR.

6. PROVIDE A MONITOR MODULE FOR EACH POWER SUPPLY.

7. FIRE ALARM SYSTEMS ARE DESIGNED BASED ON NOTIFIER SYSTEMS. CONTRACTOR SHALL HAVE PROVISIONS FOR ANY ADDITIONAL REQUIREMENTS BASED ON FCI SYSTEM.

8. FIRE ALARM DEVICES ARE TO BE WHITE IN COLOR.

SANDERS ASSOCIATES ARCHITECTS
2668 Grant Avenue
Ogden, UT 84401
P : 801.621.7303
www.sandersarch.com

Seal

Consultant

E.C.E. LLC
Electrical Consulting Engineers
939 So. West Temple
Salt Lake City, Utah 84101
Telephone (801) 521-8007
Email: Admin@eceonline.com

Project Name

WSU- MILLER ADMINISTRATION

MEP Upgrades and Remodel

3848 HARRISON BLVD.
OGDEN, UTAH 84401

Issued

No.	Date	Description
1	01.16.15	DFCM PLAN REVIEW
1	02.03.15	BID DOCUMENTS

Revision

No.	Date	Description

DFCM Project No. 14031810
ECE Project No. 4703

Drawing Title

FIRE ALARM RISER DIAGRAM

Sheet Number

EE009

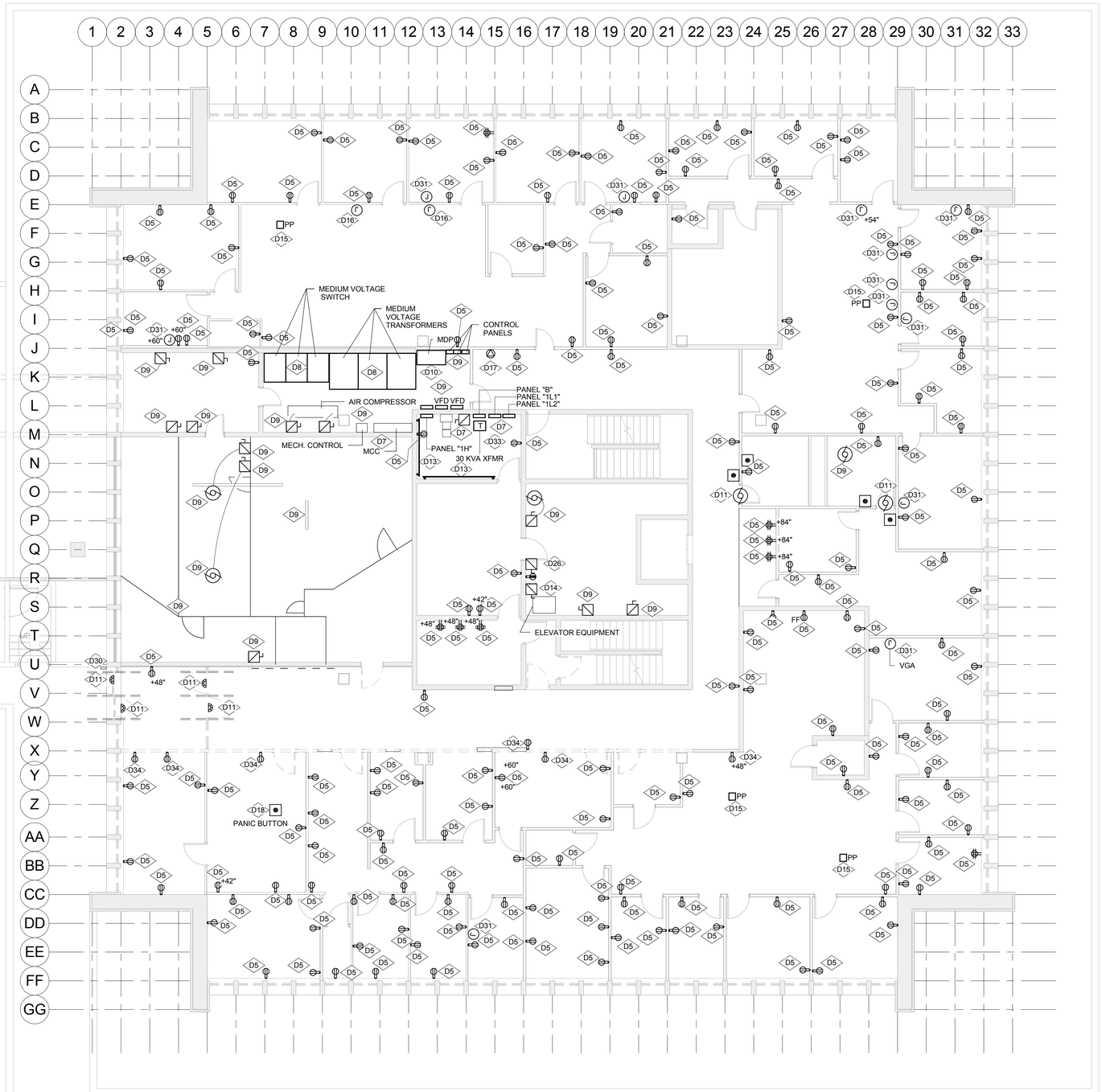

1 LEVEL 1 - DEMOLITION - POWER
1/8" = 1'-0"

REFERENCE NOTES:

D5	REPLACE ALL EXISTING DUPLEX OUTLETS WITH NEW DÉCOR TYPE, SPEC GRADE 20 AMP OUTLETS. REMOVE ALL WIRING AND TIE THE NEW OUTLETS TO THE NEW PANELBOARD AS CALLED OUT. UTILIZE EXISTING CONDUIT AND BOXES AS POSSIBLE. REMOVE ALL UNUSED CONDUIT. REFER TO POWER SHEETS FOR NEW CIRCUITRY.
D7	REMOVE EXISTING PANELBOARD, TRANSFORMERS, MOTOR CONTROL CENTER, CONDUIT, CONDUCTORS, BOXES, ETC. ALL THE WAY TO THEIR ORIGINATION POINTS.
D8	REMOVE EXISTING MEDIUM VOLTAGE SWITCHES, MEDIUM VOLTAGE TRANSFORMER, METER, CONDUIT, BOXES, ETC. POWER TO THE EQUIPMENT WILL BE SHUT DOWN BY OTHERS. MEDIUM VOLTAGE CABLES WILL BE REMOVED AND REROUTED TO NEW MEDIUM VOLTAGE SWITCHES OUTSIDE OF THE BUILDING BY OTHERS.
D9	ALL MECHANICAL EQUIPMENT IN THE ENTIRE BUILDING ARE BEING REMOVED BY MECHANICAL CONTRACTOR. REMOVE ALL DISCONNECTS, VFDS, MCC, STARTERS, CONDUIT, CONDUCTORS, ETC., WHETHER OR NOT SHOWN ON THE DRAWINGS. COORDINATE THIS WORK WITH MECHANICAL CONTRACTOR. REFER TO MECHANICAL DRAWINGS FOR MORE INFORMATION.
D10	REMOVE EXISTING MAIN DISTRIBUTION-PANELBOARD AND INSTALL THE NEW ONE IN THE SAME LOCATION. KEEP THE POWER OUTAGE TO MINIMUM AMOUNT OF TIME. PROVIDE TEMPORARY POWER TO PUMP HOUSE AND GUARD STATION (APPROXIMATELY 175 KW OF LOAD) DURING ANY POWER OUTAGE. FIELD VERIFY WORK INVOLVED.
D11	TIE EXISTING DOOR OPERATION TO A 20 AMP. 1 POLE CIRCUIT BREAKER IN PANEL EP. PROVIDE CONDUCT AND CONDUCTORS FOR A COMPLETE INSTALLATION. REMOVE EXISTING CONDUCT AND CONDUCTORS.
D13	REMOVE EXISTING T.T.B., CONDUIT, CONDUCTORS, ETC. FIELD VERIFY WORK INVOLVED.
D14	TIE THE ELEVATOR CAB LAB DISCONNECT TO 20 AMP., 1 POLE CIRCUIT BREAKER IN PANEL "EP".
D15	REMOVE, PROTECT AND CLEAN EXISTING POWER POLES AND REINSTALL THEM IN THE APPROXIMATE LOCATION. COORDINATE WITH WSU FOR EXACT LOCATION.
D16	DISCONNECT POWER TO EXISTING FURNITURE AND RECONNECT AFTER REMODELING IS DONE. REMOVE EXISTING CONDUCTORS ALL THE WAY BACK TO PANELBOARD.
D17	REMOVE EXISTING SPECIAL OUTLET ASSOCIATED CONDUIT, CONDUCTORS, J-BOXES, ETC. ALL THE WAY BACK TO THE PANELBOARD.
D18	REMOVE, PROTECT, AND REINSTALL EXISTING EMERGENCY PANIC BUTTON AFTER REMODELING IS DONE.
D26	TIE THE EXISTING ELEVATOR DISCONNECT TO A 100 AMP, 3-POLE CIRCUIT BREAKER IN NEW MAIN DISTRIBUTION PANEL. REFER TO POWER SINGLE LINE DIAGRAM FOR MORE INFORMATION.
D30	REMOVE EXISTING INDICATING LIGHTS, WEATHERPROOF BOX, ASSOCIATED CONDUIT AND CONDUCTORS ALL THE WAY BACK TO THEIR ORIGINATION POINTS.
D31	EXISTING J-BOXES ARE TO REMAIN. PROVIDE NEW COVER PLATE.
D33	CONTRACTOR IS TO SALVAGE ALL THE SURGE PROTECTIVE DEVICES AND INSTALL THEM FOR THE NEW PANELBOARDS. REFER TO POWER SINGLE LINE DIAGRAM FOR MORE INFORMATION. PROTECT DURING CONSTRUCTION, CLEAN AND INSTALL.
D34	EXISTING WALL IS BEING DEMOLISHED BY GENERAL CONTRACTOR. REMOVE EXISTING DEVICES, ASSOCIATED CONDUITS AND CONDUCTORS.

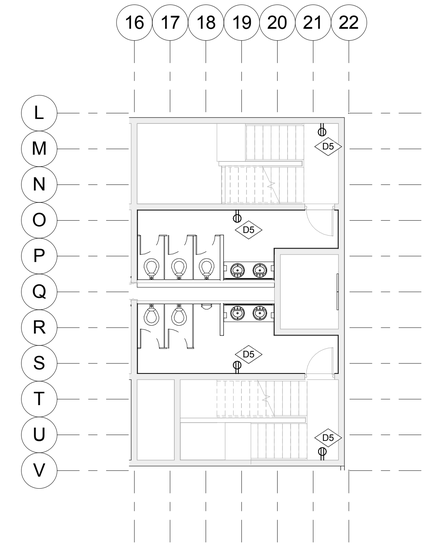

2 Level 1 MEZZANINE - POWER DEMO
1/8" = 1'-0"

SANDERS ASSOCIATES ARCHITECTS
2668 Grant Avenue
Ogden, UT 84401
P : 801.621.7303
www.sandersarch.com

Seal

Consultant

E.C.E. LLC
Electrical Consulting Engineers
939 So. West Temple
Salt Lake City, Utah 84101
Telephone (801) 521-8007
Email: Admin@eceonline.com

Project Name

WSU- MILLER ADMINISTRATION

MEP Upgrades and Remodel

3848 HARRISON BLVD.
OGDEN, UTAH 84401

Issued

No.	Date	Description
1	01.16.15	DFCM PLAN REVIEW
1	02.03.15	BID DOCUMENTS

Revision

No.	Date	Description

DFCM Project No. 14031810

ECE Project No. 4703

Drawing Title

LEVEL 1 DEMOLITION FLOOR PLAN - POWER

Sheet Number

ED101

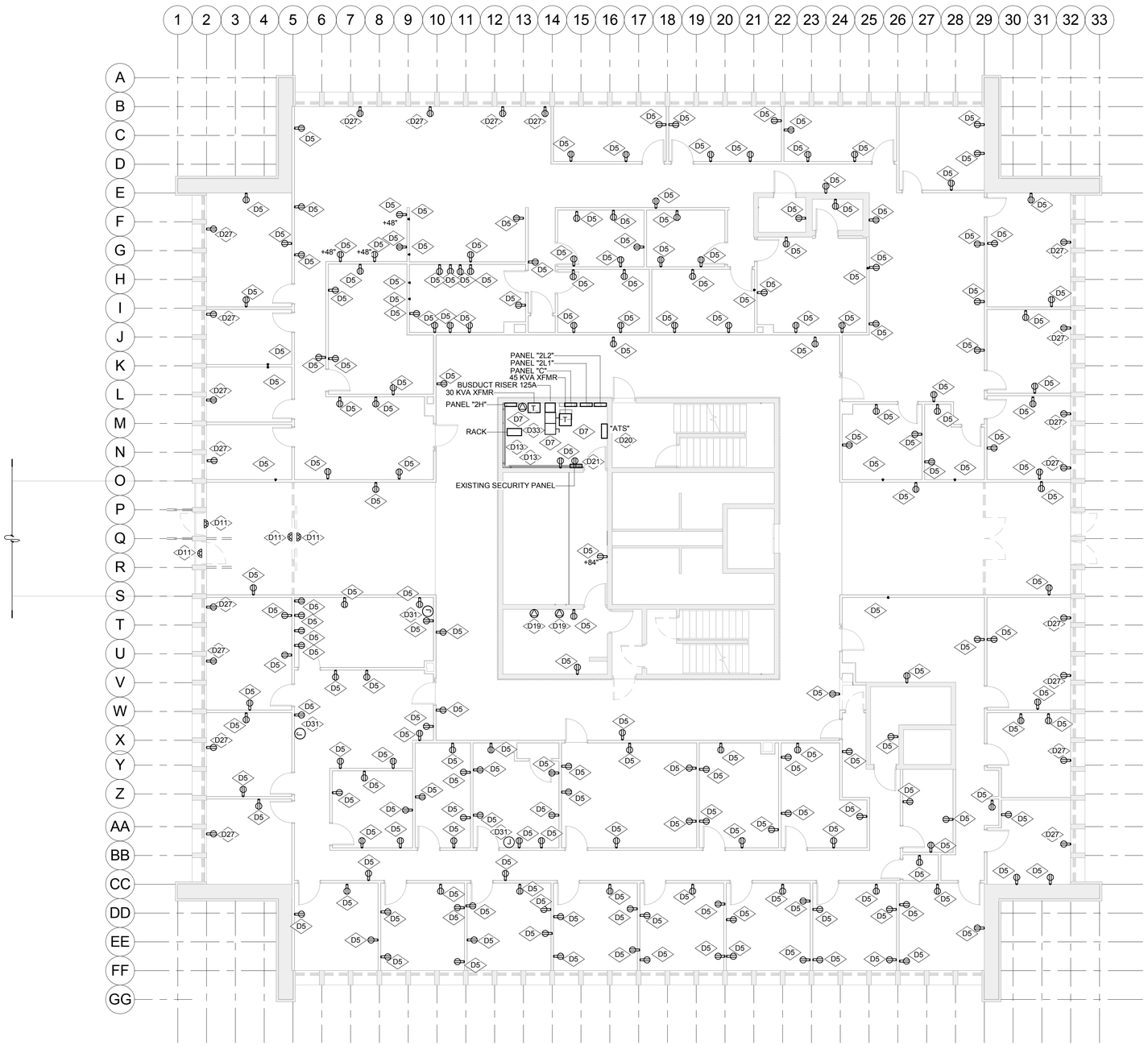

1 LEVEL 2 - DEMOLITION - POWER
1/8" = 1'-0"

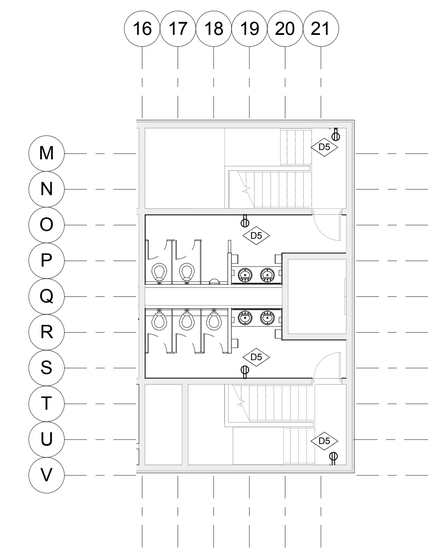

2 Level 2 MEZZANINE - POWER DEMO
1/8" = 1'-0"

REFERENCE NOTES:

D5	REPLACE ALL EXISTING DUPLEX OUTLETS WITH NEW DÉCOR TYPE, SPEC GRADE 20 AMP OUTLETS. REMOVE ALL WIRING AND TIE THE NEW OUTLETS TO THE NEW PANELBOARD AS CALLED OUT. UTILIZE EXISTING CONDUIT AND BOXES AS POSSIBLE. REMOVE ALL UNUSED CONDUIT. REFER TO POWER SHEETS FOR NEW CIRCUITRY.
D7	REMOVE EXISTING PANELBOARD, TRANSFORMERS, MOTOR CONTROL CENTER, CONDUIT, CONDUCTORS, BOXES, ETC. ALL THE WAY TO THEIR ORIGINATION POINTS.
D11	TIE EXISTING DOOR OPERATION TO A 20 AMP. 1 POLE CIRCUIT BREAKER IN PANEL EP. PROVIDE CONDUCT AND CONDUCTORS FOR A COMPLETE INSTALLATION. REMOVE EXISTING CONDUCT AND CONDUCTORS.
D13	REMOVE EXISTING T.T.B., CONDUIT, CONDUCTORS, ETC. FIELD VERIFY WORK INVOLVED.
D19	TIE THE DRYER 30 AMP OUTLET TO A 30 AMP 2 POLE CIRCUIT BREAKER IN PANEL "2P2". PROVIDE CONDUIT AND CONDUCTORS FOR A COMPLETE INSTALLATION (2 # 10 THHN, 1 # 10 THHN GND).
D20	RELOCATE EXISTING AUTOMATIC TRANSFER SWITCH TO 1ST FLOOR ELECTRICAL ROOM. EXTEND EXISTING CONDUIT AND CONDUCTORS TO NEW LOCATION FOR A COMPLETE INSTALLATION. REFER TO POWER SINGLE LINE DIAGRAM FOR MORE INFORMATION.
D21	EXISTING SECURITY PANEL IS TO REMAIN. PROTECT DURING CONSTRUCTION AND CLEAN AFTER CONSTRUCTION IS COMPLETE. MAIN CIRCUIT INTEGRITY TO SECURITY DEVICES.
D27	REMOVE EXISTING DEVICES, ASSOCIATED CONDUIT, CONDUCTORS, BOXES, ETC. FROM THE EXTERIOR WALLS. WINDOWS ARE BEING REPLACED WITH FLOOR TO CEILING WINDOWS. COORDINATE THIS WORK WITH GENERAL CONTRACTOR.
D31	EXISTING J-BOXES ARE TO REMAIN. PROVIDE NEW COVER PLATE.
D33	CONTRACTOR IS TO SALVAGE ALL THE SURGE PROTECTIVE DEVICES AND INSTALL THEM FOR THE NEW PANELBOARDS. REFER TO POWER SINGLE LINE DIAGRAM FOR MORE INFORMATION. PROTECT DURING CONSTRUCTION, CLEAN AND INSTALL.

SANDERS ASSOCIATES ARCHITECTS
2668 Grant Avenue
Ogden, UT 84401
P : 801.621.7303
www.sandersarch.com

Seal

Consultant

E.C.E. LLC
Electrical Consulting Engineers
939 So. West Temple
Salt Lake City, Utah 84101
Telephone (801) 521-8007
Email: Admin@eceonline.com

Project Name

WSU- MILLER ADMINISTRATION

MEP Upgrades and Remodel

3848 HARRISON BLVD.
OGDEN, UTAH 84401

Issued

No.	Date	Description
1	01.16.15	DFCM PLAN REVIEW
1	02.03.15	BID DOCUMENTS

Revision

No.	Date	Description

DFCM Project No. 14031810
ECE Project No. 4703

Drawing Title

LEVEL 2 DEMOLITION FLOOR PLAN - POWER

Sheet Number

ED102

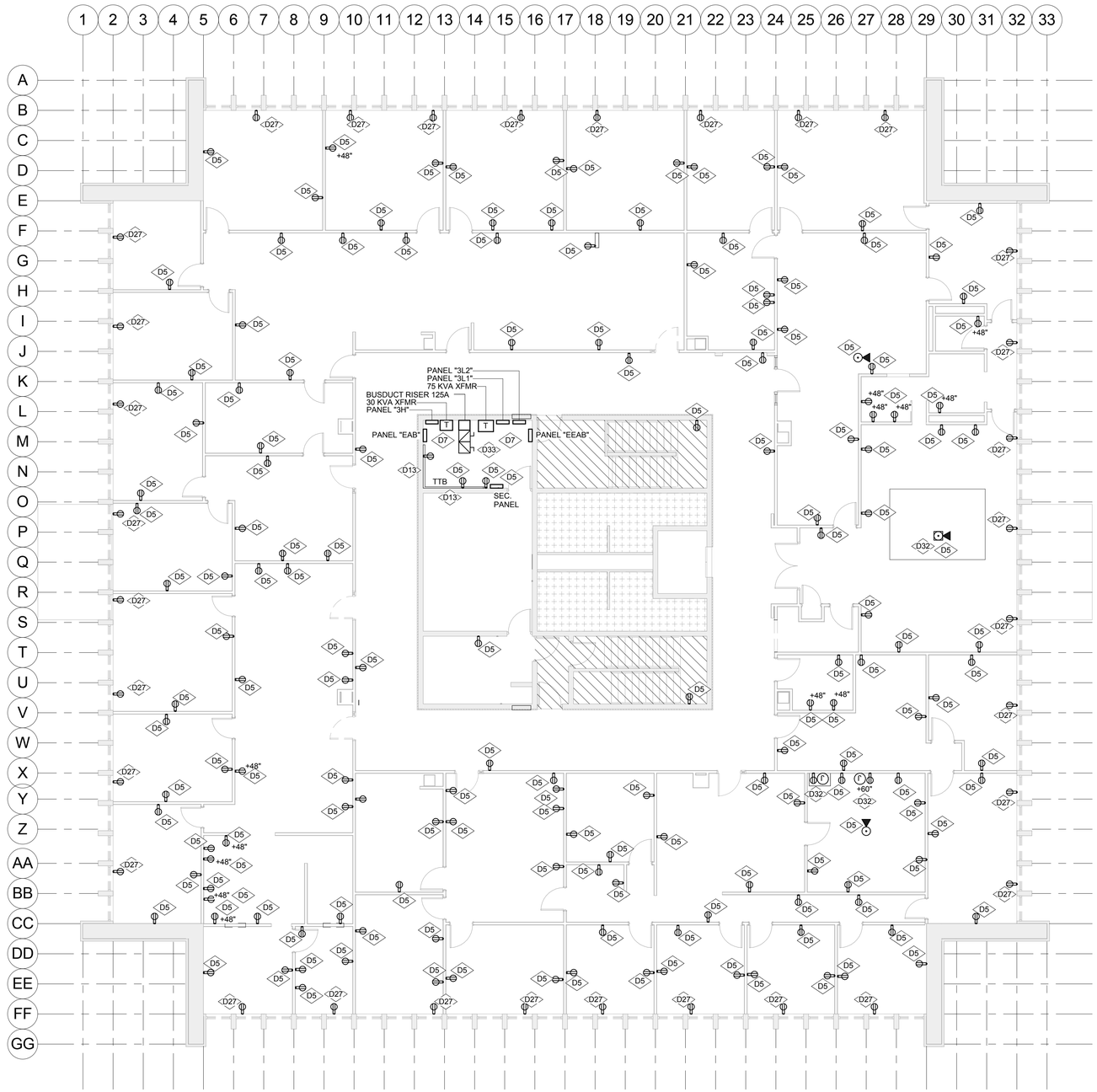

1 LEVEL 3 - DEMOLITION - POWER
1/8" = 1'-0"

REFERENCE NOTES:

D5	REPLACE ALL EXISTING DUPLEX OUTLETS WITH NEW DÉCOR TYPE, SPEC GRADE 20 AMP OUTLETS. REMOVE ALL WIRING AND TIE THE NEW OUTLETS TO THE NEW PANELBOARD AS CALLED OUT. UTILIZE EXISTING CONDUIT AND BOXES AS POSSIBLE. REMOVE ALL UNUSED CONDUIT. REFER TO POWER SHEETS FOR NEW CIRCUITRY.
D7	REMOVE EXISTING PANELBOARD, TRANSFORMERS, MOTOR CONTROL CENTER, CONDUIT, CONDUCTORS, BOXES, ETC. ALL THE WAY TO THEIR ORIGINATION POINTS.
D13	REMOVE EXISTING T.T.B., CONDUIT, CONDUCTORS, ETC. FIELD VERIFY WORK INVOLVED.
D27	REMOVE EXISTING DEVICES, ASSOCIATED CONDUIT, CONDUCTORS, BOXES, ETC. FROM THE EXTERIOR WALLS. WINDOWS ARE BEING REPLACED WITH FLOOR TO CEILING WINDOWS. COORDINATE THIS WORK WITH GENERAL CONTRACTOR.
D32	EXISTING A/V WIRING, CONNECTORS, ETC. ARE TO REMAIN FOR TV AND A/V EQUIPMENT. PROTECT THESE EQUIPMENT, CONNECTORS, ETC. DURING CONSTRUCTION. CLEAN AFTER CONSTRUCTION IS COMPLETE. FIELD VERIFY WORK INVOLVED.
D33	CONTRACTOR IS TO SALVAGE ALL THE SURGE PROTECTIVE DEVICES AND INSTALL THEM FOR THE NEW PANELBOARDS. REFER TO POWER SINGLE LINE DIAGRAM FOR MORE INFORMATION. PROTECT DURING CONSTRUCTION, CLEAN AND INSTALL.

SANDERS ASSOCIATES ARCHITECTS
2668 Grant Avenue
Ogden, UT 84401
P : 801.621.7303
www.sandersarch.com

Seal

Consultant

E.C.E. LLC
Electrical Consulting Engineers
939 So. West Temple
Salt Lake City, Utah 84101
Telephone (801) 521-8007
Email: Admin@eceonline.com

Project Name

WSU- MILLER ADMINISTRATION

MEP Upgrades and Remodel

3848 HARRISON BLVD.
OGDEN, UTAH 84401

Issued

No.	Date	Description
1	01.16.15	DFCM PLAN REVIEW
1	02.03.15	BID DOCUMENTS

Revision

No.	Date	Description

DFCM Project No. 14031810
ECE Project No. 4703

Drawing Title

LEVEL 3 DEMOLITION FLOOR PLAN - POWER

Sheet Number

ED103

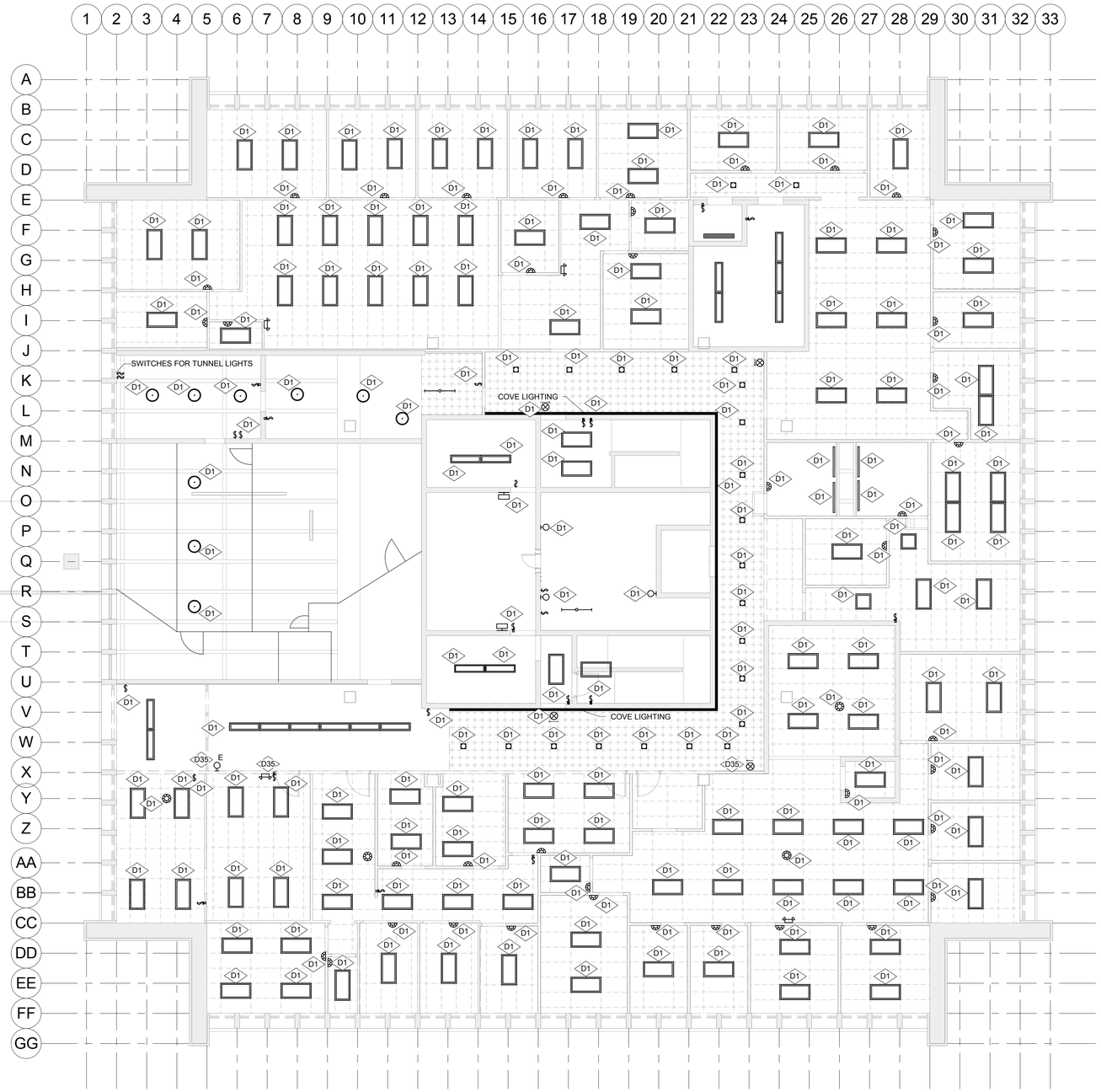

1 LEVEL 1 - DEMOLITION - LIGHTING
1/8" = 1'-0"

REFERENCE NOTES:

D1 REMOVE ALL LIGHT FIXTURES, EXIT SIGNS, LIGHT SWITCHES, MOTION SENSORS, SUPPORT HANGERS, CONDUCTORS, ETC. ALL THE WAY TO PANELBOARDS. UTILIZE EXISTING 3/4" CONDUIT AS POSSIBLE FOR NEW LIGHT FIXTURES. ALL MC CABLES, CONDUIT SMALLER THAN 3/4", ROMEX, ETC. MUST BE REMOVED. ALL UNUSED MATERIALS MUST BE REMOVED. CONDUITS THAT ARE NOT BENT CAN BE REUSED. CLEAN INSIDE OF THE CONDUIT OF ANY DEBRIS. UTILIZE EXISTING IN THE WALL BOXES FOR NEW MOTION SENSORS.

D35 EXISTING WALL IS BEING DEMOLISHED BY GENERAL CONTRACTOR. REMOVE ALL LIGHT SWITCHES, EXIT SIGNS, ETC. WHETHER OR NOT SHOWN ON DRAWINGS. REMOVE ASSOCIATED CONDUITS AND CONDUCTORS ALL THE WAY TO PANELBOARD.

SPECIAL NOTE:

1. UNDER THIS PROJECT ALL LIGHT FIXTURES IN THE ENTIRE BUILDING WILL BE REPLACED. DEMOLITION CONTRACTOR IS TO REMOVE ALL CONDUIT, CONDUCTORS, HANGERS, BOXES, ETC. ALL THE WAY BACK TO PANELBOARDS. FIELD VERIFY WORK INVOLVED PRIOR TO BID.

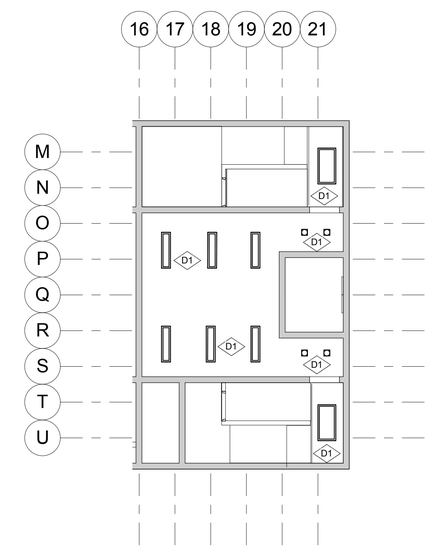

2 LEVEL 1 MEZZANINE - LIGHTING DEMO
1/8" = 1'-0"

SANDERS ASSOCIATES ARCHITECTS
2668 Grant Avenue
Ogden, UT 84401
P : 801.621.7303
www.sandersarch.com

Seal

Consultant

E.C.E. LLC
Electrical Consulting Engineers
939 So. West Temple
Salt Lake City, Utah 84101
Telephone (801) 521-8007
Email: Admin@eceonline.com

Project Name

WSU- MILLER ADMINISTRATION

MEP Upgrades and Remodel

3848 HARRISON BLVD.
OGDEN, UTAH 84401

Issued

No.	Date	Description
1	01.16.15	DFCM PLAN REVIEW
1	02.03.15	BID DOCUMENTS

Revision

No.	Date	Description

DFCM Project No. 14031810
ECE Project No. 4703

Drawing Title

LEVEL 1 DEMOLITION FLOOR PLAN - LIGHTING

Sheet Number

ED201

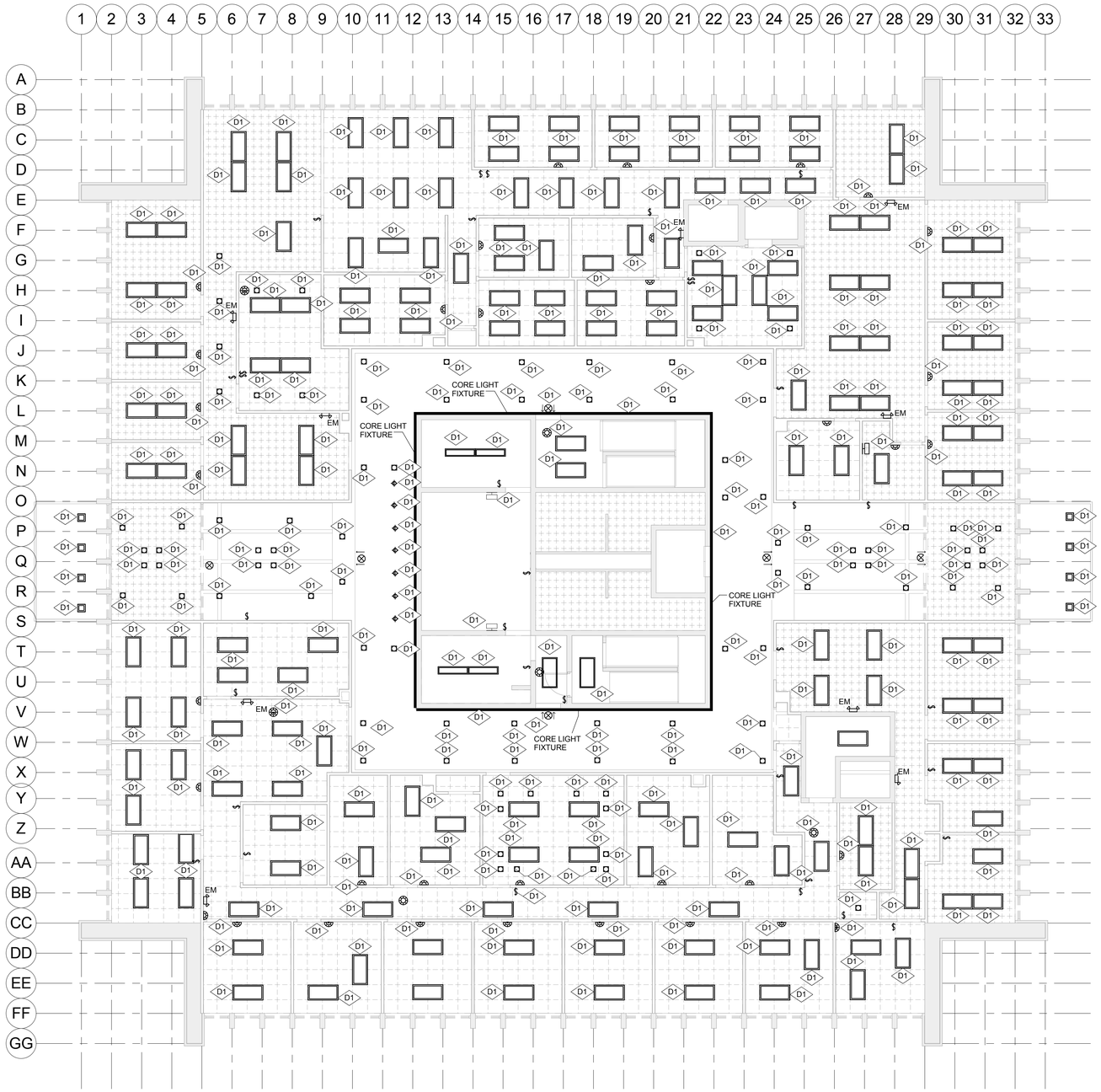

1 LEVEL 2 - DEMOLITION - LIGHTING
1/8" = 1'-0"

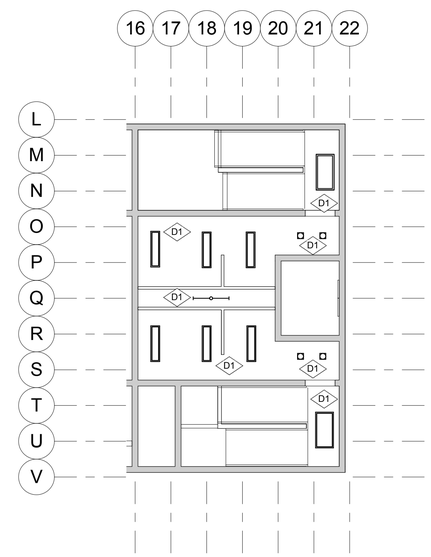

2 LEVEL 2 MEZZANINE - LIGHTING DEMO
1/8" = 1'-0"

REFERENCE NOTES:

D1 REMOVE ALL LIGHT FIXTURES, EXIT SIGNS, LIGHT SWITCHES, MOTION SENSORS, SUPPORT HANGERS, CONDUCTORS, ETC. ALL THE WAY TO PANELBOARDS. UTILIZE EXISTING 3/4" CONDUIT AS POSSIBLE FOR NEW LIGHT FIXTURES. ALL MC CABLES, CONDUIT SMALLER THAN 3/4", ROMEX, ETC. MUST BE REMOVED. ALL UNUSED MATERIALS MUST BE REMOVED. CONDUITS THAT ARE NOT BENT CAN BE REUSED. CLEAN INSIDE OF THE CONDUIT OF ANY DEBRIS. UTILIZE EXISTING IN THE WALL BOXES FOR NEW MOTION SENSORS.

SPECIAL NOTE:

1. UNDER THIS PROJECT ALL LIGHT FIXTURES IN THE ENTIRE BUILDING WILL BE REPLACED. DEMOLITION CONTRACTOR IS TO REMOVE ALL CONDUIT, CONDUCTORS, HANGERS, BOXES, ETC. ALL THE WAY BACK TO PANELBOARDS. FIELD VERIFY WORK INVOLVED PRIOR TO BID.

SANDERS ASSOCIATES ARCHITECTS
2668 Grant Avenue
Ogden, UT 84401
P : 801.621.7303
www.sandersarch.com

Seal

Consultant

E.C.E. LLC
Electrical Consulting Engineers
939 So. West Temple
Salt Lake City, Utah 84101
Telephone (801) 521-8007
Email: Admin@eceonline.com

Project Name

WSU- MILLER ADMINISTRATION

MEP Upgrades and Remodel

3848 HARRISON BLVD.
OGDEN, UTAH 84401

Issued

No.	Date	Description
1	01.16.15	DFCM PLAN REVIEW
1	02.03.15	BID DOCUMENTS

Revision

No.	Date	Description

DFCM Project No. 14031810
ECE Project No. 4703

Drawing Title

LEVEL 2 DEMOLITION FLOOR PLAN - LIGHTING

Sheet Number

ED202

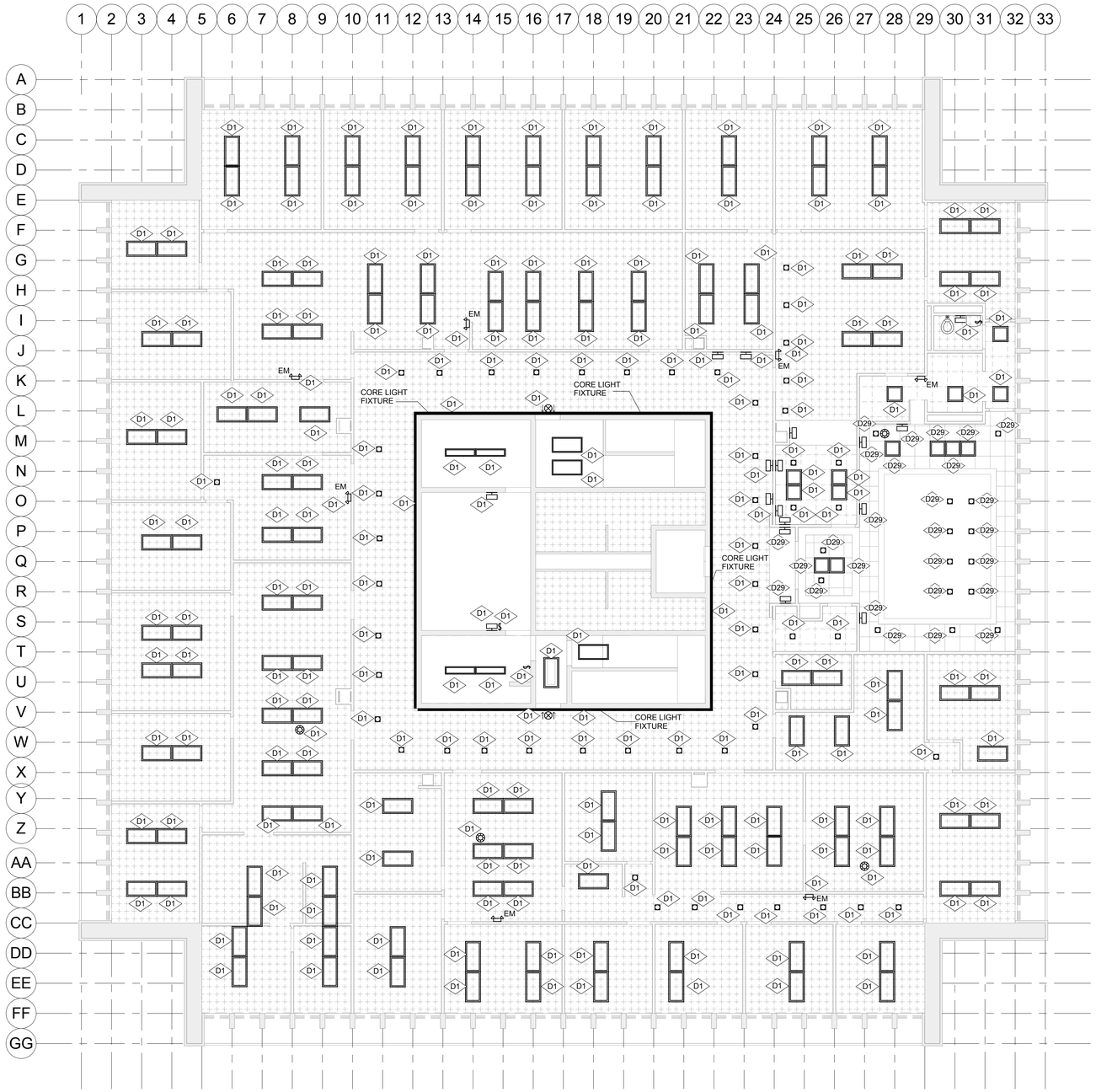

1 LEVEL 3 - DEMOLITION - LIGHTING
1/8" = 1'-0"

REFERENCE NOTES:

D1 REMOVE ALL LIGHT FIXTURES, EXIT SIGNS, LIGHT SWITCHES, MOTION SENSORS, SUPPORT HANGERS, CONDUCTORS, ETC. ALL THE WAY TO PANELBOARDS. UTILIZE EXISTING 3/4" CONDUIT AS POSSIBLE FOR NEW LIGHT FIXTURES. ALL MC CABLES, CONDUIT SMALLER THAN 3/4", ROMEX, ETC. MUST BE REMOVED. ALL UNUSED MATERIALS MUST BE REMOVED. CONDUITS THAT ARE NOT BENT CAN BE REUSED. CLEAN INSIDE OF THE CONDUIT OF ANY DEBRIS. UTILIZE EXISTING IN THE WALL BOXES FOR NEW MOTION SENSORS.

D29 EXISTING LIGHT FIXTURES, ASSOCIATED CONDUIT, BOXES, CONDUCTORS, ETC. ARE TO REMAIN. TIE THE CIRCUITS TO NEW ELECTRICAL PANELS FOR A COMPLETE INSTALLATION. TIE EMERGENCY LIGHTING CIRCUIT TO NEW EMERGENCY PANEL. PROVIDE CONDUIT AND CONDUCTORS FOR A COMPLETE INSTALLATION.

SPECIAL NOTE:

1. UNDER THIS PROJECT ALL LIGHT FIXTURES IN THE ENTIRE BUILDING WILL BE REPLACED. DEMOLITION CONTRACTOR IS TO REMOVE ALL CONDUIT, CONDUCTORS, HANGERS, BOXES, ETC. ALL THE WAY BACK TO PANELBOARDS. FIELD VERIFY WORK INVOLVED PRIOR TO BID.

SANDERS ASSOCIATES ARCHITECTS
2668 Grant Avenue
Ogden, UT 84401
P : 801.621.7303
www.sandersarch.com

Seal

Consultant

E.C.E. LLC
Electrical Consulting Engineers
939 So. West Temple
Salt Lake City, Utah 84101
Telephone (801) 521-8007
Email: Admin@eceonline.com

Project Name

WSU- MILLER ADMINISTRATION

MEP Upgrades and Remodel

3848 HARRISON BLVD.
OGDEN, UTAH 84401

Issued

No.	Date	Description
1	01.16.15	DFCM PLAN REVIEW
1	02.03.15	BID DOCUMENTS

Revision

No.	Date	Description

DFCM Project No. 14031810
ECE Project No. 4703

Drawing Title

LEVEL 3 DEMOLITION FLOOR PLAN - LIGHTING

Sheet Number

ED203

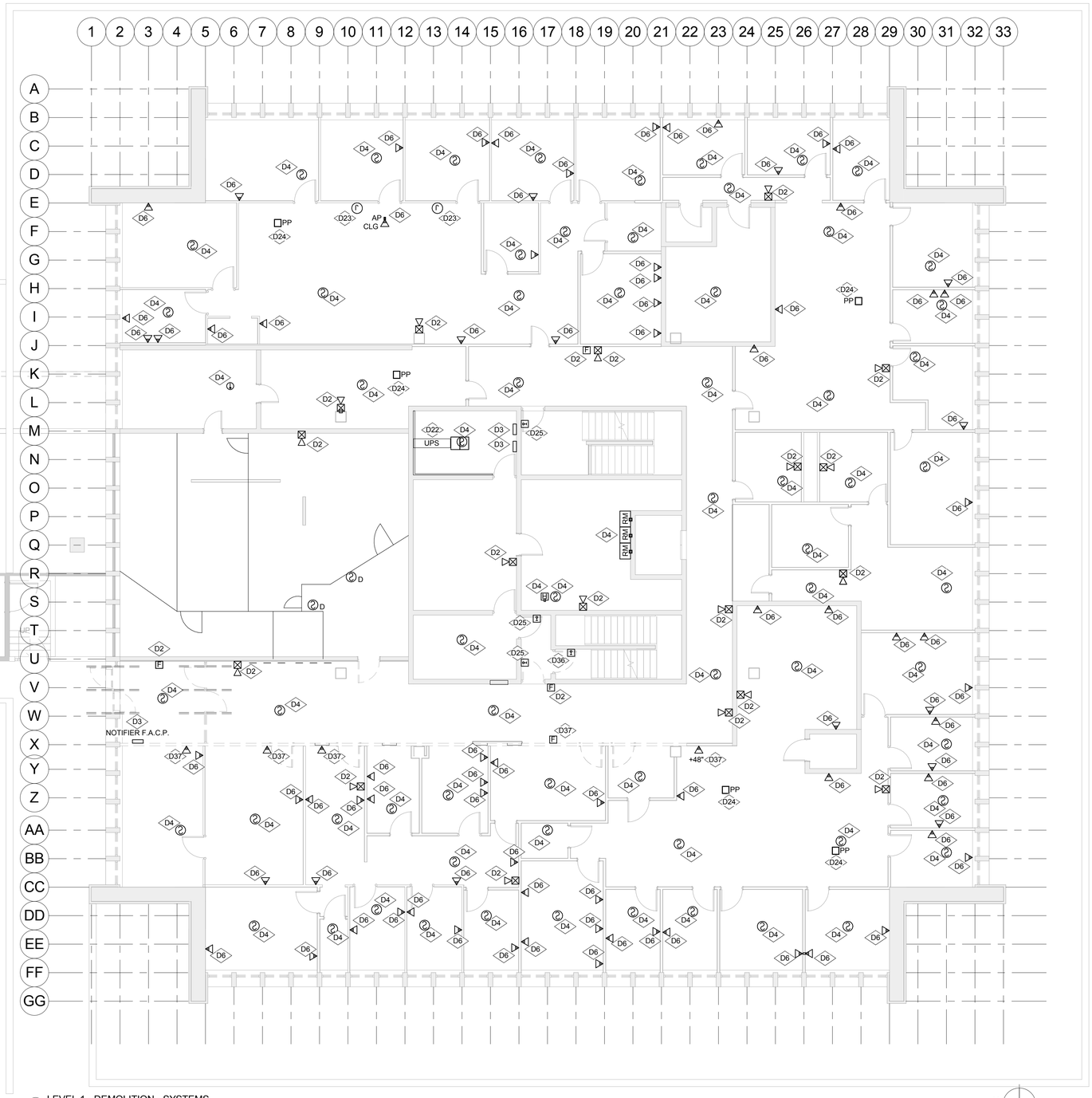

1 LEVEL 1 - DEMOLITION - SYSTEMS
1/8" = 1'-0"

REFERENCE NOTES:

D2	REMOVE EXISTING FIRE ALARM DEVICES, CONDUITS, CONDUCTORS, ETC. UTILIZE EXISTING J-BOXES AS POSSIBLE FOR NEW DEVICES.
D3	REMOVE EXISTING FIRE ALARM CONTROL PANEL, ASSOCIATED CONDUIT AND CONDUCTORS. THE ENTIRE FIRE ALARM SYSTEM IS BEING REPLACED WITH A NEW ONE.
D4	REMOVE ALL EXISTING FIRE ALARM DEVICES, ASSOCIATED CONDUIT, CONDUCTORS, J-BOXES, ETC. WHETHER OR NOT SHOWN ON THE DRAWINGS.
D6	REMOVE EXISTING VOICE/DATA JACKS, ASSOCIATED CABLES, CONDUIT ALL THE WAY BACK TO NEW ORIGINATION POINTS. UTILIZE EXISTING BOXES AND CONDUIT FOR NEW DEVICES AS POSSIBLE. ALL CABLES WILL BE NEW.
D22	REMOVE EXISTING UPS, BATTERIES, CABINET, ETC. REMOVE ASSOCIATED CONDUIT, CONDUCTORS, BOXES, ETC. ALL THE WAY BACK TO THEIR ORIGINATION POINTS.
D23	DISCONNECT VOICE/DATA CONNECTIONS TO PORTABLE FURNITURE. REMOVE ALL CABLING BACK TO THEIR ORIGINATION POINTS.
D24	REMOVE EXISTING VOICE/DATA CABLES ALL THE WAY BACK TO THEIR ORIGINATION POINTS. POWER POLES ARE BEING REMOVED AND REINSTALLED AT THE END OF THE PROJECT. COORDINATE WITH GENERAL CONTRACTOR.
D25	DISCONNECT THE EXISTING DOOR HOLDERS AND TIE THEM TO PANEL EP-6 THROUGH NEW FIRE ALARM CONTROL PANEL FOR AUTOMATIC RELEASE. PROVIDE CONDUIT, CONDUCTORS, RELAY MODULES, ETC. FOR A COMPLETE INSTALLATION.
D36	REMOVE EXISTING DOOR HOLDER. REMOVE ASSOCIATED CONDUIT AND CONDUCTORS.
D37	EXISTING WALL IS BEING DEMOLISHED BY GENERAL CONTRACTOR. REMOVE ALL DEVICES, ASSOCIATED CONDUITS AND CONDUCTORS, ETC.

SPECIAL NOTES:

1. ALL A/V EQUIPMENT IN THE ENTIRE BUILDING IS TO REMAIN. CONTRACTOR IS TO PROTECT ALL CABLES, CONNECTORS, EQUIPMENT, ETC. DURING CONSTRUCTION AND CLEAN THEM AT THE END OF THE PROJECT. ANY DAMAGE DONE TO THE A/V EQUIPMENT WILL BE CONTRACTORS RESPONSIBILITY.

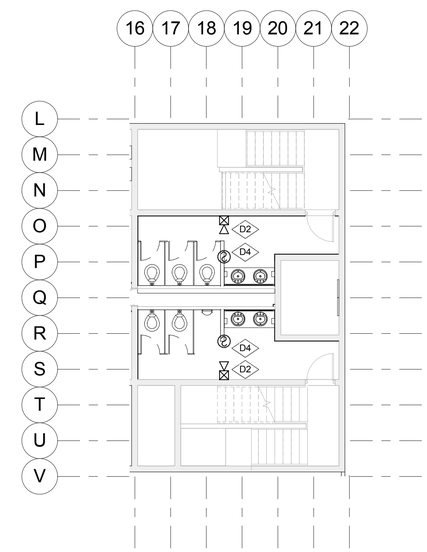

2 Level 1 MEZZANINE - SYSTEMS DEMO
1/8" = 1'-0"

SANDERS ASSOCIATES ARCHITECTS
2668 Grant Avenue
Ogden, UT 84401
P : 801.621.7303
www.sandersarch.com

Seal

Consultant

E.C.E. LLC
Electrical Consulting Engineers
939 So. West Temple
Salt Lake City, Utah 84101
Telephone (801) 521-8007
Email: Admin@eceonline.com

Project Name

WSU- MILLER ADMINISTRATION

MEP Upgrades and Remodel

3848 HARRISON BLVD.
OGDEN, UTAH 84401

Issued

No.	Date	Description
1	01.16.15	DFCM PLAN REVIEW
1	02.03.15	BID DOCUMENTS

Revision

No.	Date	Description

DFCM Project No. 14031810
ECE Project No. 4703

Drawing Title

LEVEL 1 DEMOLITION FLOOR PLAN - SYSTEMS

Sheet Number

ED301

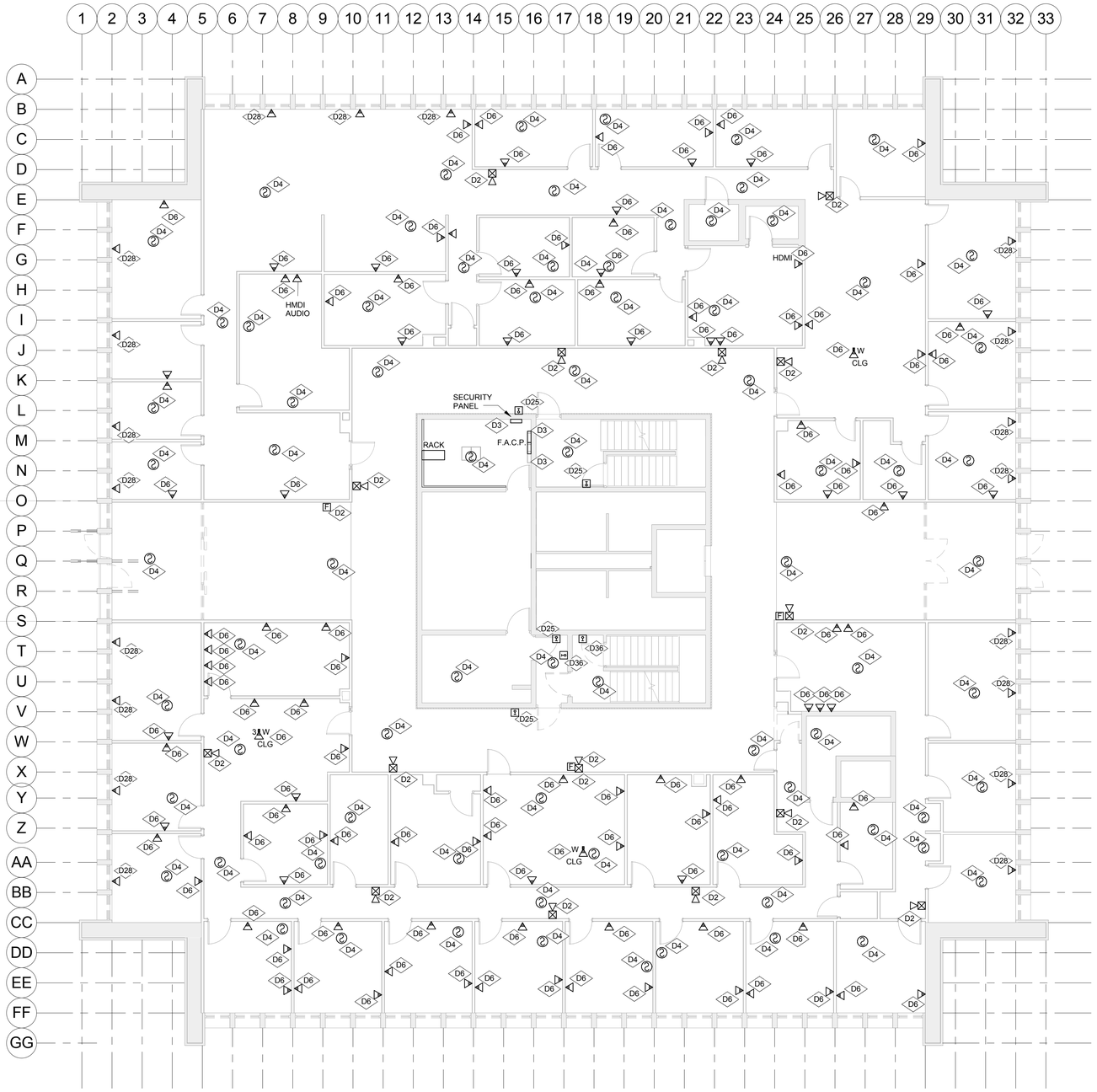

1 LEVEL 2 - DEMOLITION - SYSTEMS
1/8" = 1'-0"

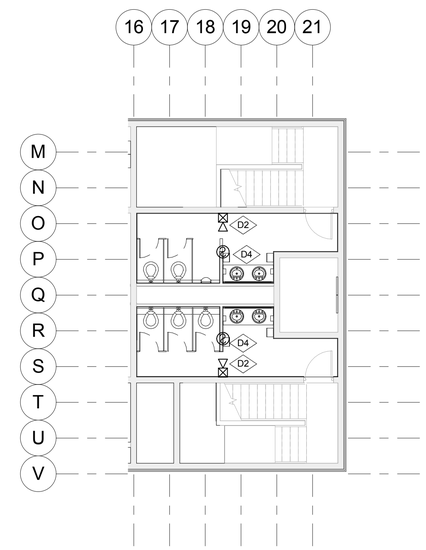

2 Level 2 MEZZANINE - SYSTEMS DEMO
1/8" = 1'-0"

REFERENCE NOTES:

D2	REMOVE EXISTING FIRE ALARM DEVICES, CONDUITS, CONDUCTORS, ETC. UTILIZE EXISTING J-BOXES AS POSSIBLE FOR NEW DEVICES.
D3	REMOVE EXISTING FIRE ALARM CONTROL PANEL, ASSOCIATED CONDUIT AND CONDUCTORS. THE ENTIRE FIRE ALARM SYSTEM IS BEING REPLACED WITH A NEW ONE.
D4	REMOVE ALL EXISTING FIRE ALARM DEVICES, ASSOCIATED CONDUIT, CONDUCTORS, J-BOXES, ETC. WHETHER OR NOT SHOWN ON THE DRAWINGS.
D6	REMOVE EXISTING VOICE/DATA JACKS, ASSOCIATED CABLES, CONDUIT ALL THE WAY BACK TO NEW ORIGINATION POINTS. UTILIZE EXISTING BOXES AND CONDUIT FOR NEW DEVICES AS POSSIBLE. ALL CABLES WILL BE NEW.
D25	DISCONNECT THE EXISTING DOOR HOLDERS AND TIE THEM TO PANEL EP-6 THROUGH NEW FIRE ALARM CONTROL PANEL FOR AUTOMATIC RELEASE. PROVIDE CONDUIT, CONDUCTORS, RELAY MODULES, ETC. FOR A COMPLETE INSTALLATION.
D28	REMOVE EXISTING VOICE/DATA BOXES, ASSOCIATED CONDUIT, CABLES, ETC. FROM EXTERIOR WALLS WHETHER OR NOT SHOWN ON THE PLANS. COORDINATE WITH GENERAL CONTRACTOR.
D36	REMOVE EXISTING DOOR HOLDER. REMOVE ASSOCIATED CONDUIT AND CONDUCTORS.

SPECIAL NOTES:

1. ALL A/V EQUIPMENT IN THE ENTIRE BUILDING IS TO REMAIN. CONTRACTOR IS TO PROTECT ALL CABLES, CONNECTORS, EQUIPMENT, ETC. DURING CONSTRUCTION AND CLEAN THEM AT THE END OF THE PROJECT. ANY DAMAGE DONE TO THE A/V EQUIPMENT WILL BE CONTRACTORS RESPONSIBILITY.

SANDERS ASSOCIATES ARCHITECTS
2668 Grant Avenue
Ogden, UT 84401
P : 801.621.7303
www.sandersarch.com

Seal

Consultant
E.C.E. LLC
Electrical Consulting Engineers
939 So. West Temple
Salt Lake City, Utah 84101
Telephone (801) 521-8007
Email: Admin@eceonline.com

Project Name

WSU- MILLER ADMINISTRATION

MEP Upgrades and Remodel

3848 HARRISON BLVD.
OGDEN, UTAH 84401

Issued

No.	Date	Description
1	01.16.15	DFCM PLAN REVIEW
1	02.03.15	BID DOCUMENTS

Revision #

No.	Date	Description

DFCM Project No. 14031810
ECE Project No. 4703

Drawing Title

LEVEL 2 DEMOLITION FLOOR PLAN - SYSTEMS

Sheet Number

ED302

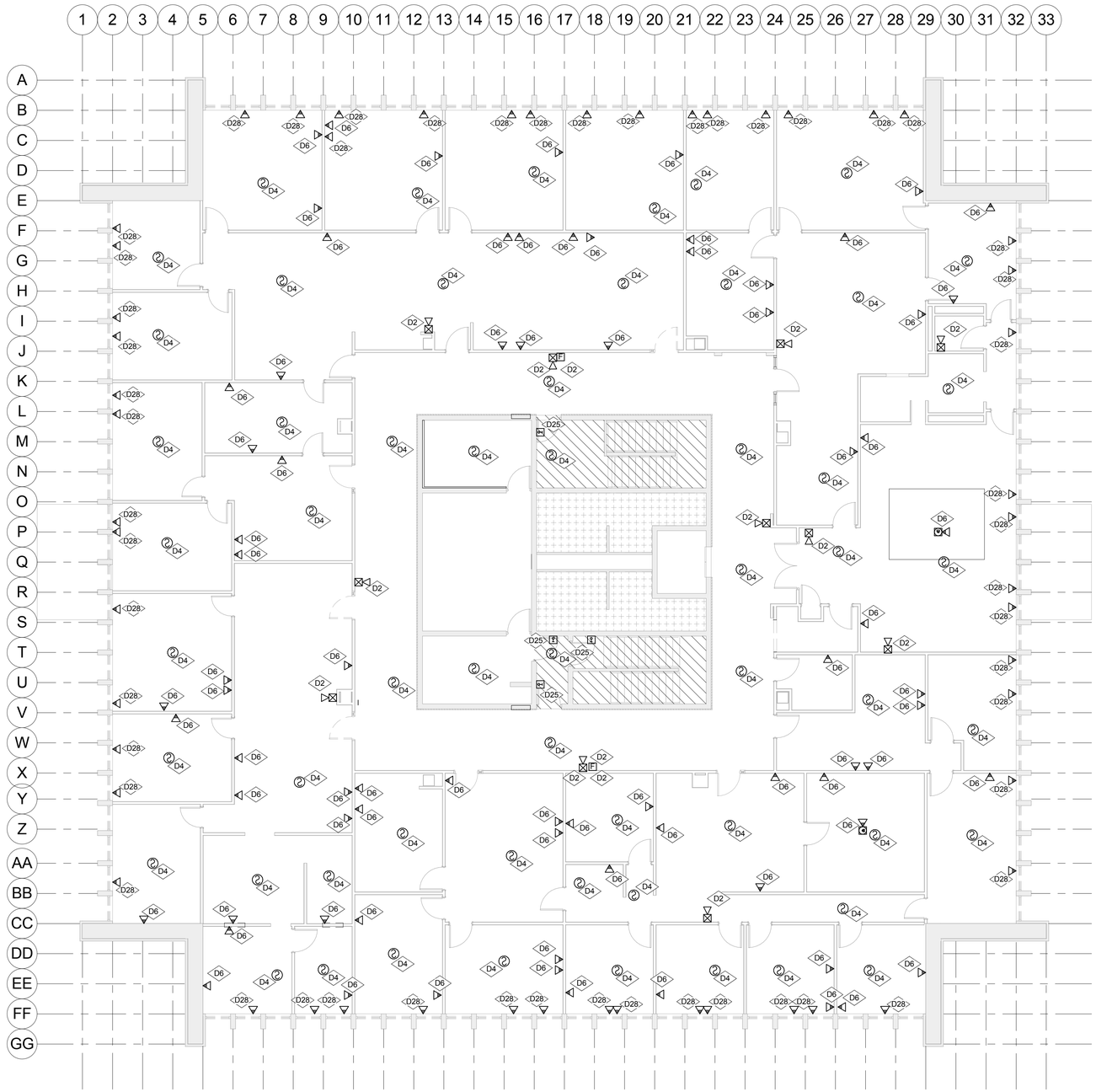

1 LEVEL 3 - DEMOLITION - SYSTEMS
1/8" = 1'-0"

REFERENCE NOTES:

D2	REMOVE EXISTING FIRE ALARM DEVICES, CONDUITS, CONDUCTORS, ETC. UTILIZE EXISTING J-BOXES AS POSSIBLE FOR NEW DEVICES.
D4	REMOVE ALL EXISTING FIRE ALARM DEVICES, ASSOCIATED CONDUIT, CONDUCTORS, J-BOXES, ETC. WHETHER OR NOT SHOWN ON THE DRAWINGS.
D6	REMOVE EXISTING VOICE/DATA JACKS, ASSOCIATED CABLES, CONDUIT ALL THE WAY BACK TO NEW ORIGINATION POINTS. UTILIZE EXISTING BOXES AND CONDUIT FOR NEW DEVICES AS POSSIBLE. ALL CABLES WILL BE NEW.
D25	DISCONNECT THE EXISTING DOOR HOLDERS AND TIE THEM TO PANEL EP-6 THROUGH NEW FIRE ALARM CONTROL PANEL FOR AUTOMATIC RELEASE. PROVIDE CONDUIT, CONDUCTORS, RELAY MODULES, ETC. FOR A COMPLETE INSTALLATION.
D28	REMOVE EXISTING VOICE/DATA BOXES, ASSOCIATED CONDUIT, CABLES, ETC. FROM EXTERIOR WALLS WHETHER OR NOT SHOWN ON THE PLANS. COORDINATE WITH GENERAL CONTRACTOR.

SPECIAL NOTES:

1. ALL A/V EQUIPMENT IN THE ENTIRE BUILDING IS TO REMAIN. CONTRACTOR IS TO PROTECT ALL CABLES, CONNECTORS, EQUIPMENT, ETC. DURING CONSTRUCTION AND CLEAN THEM AT THE END OF THE PROJECT. ANY DAMAGE DONE TO THE A/V EQUIPMENT WILL BE CONTRACTORS RESPONSIBILITY.

SANDERS ASSOCIATES ARCHITECTS
2668 Grant Avenue
Ogden, UT 84401
P : 801.621.7303
www.sandersarch.com

Seal

Consultant

E.C.E. LLC
Electrical Consulting Engineers
939 So. West Temple
Salt Lake City, Utah 84101
Telephone (801) 521-8007
Email: Admin@eceonline.com

Project Name

WSU- MILLER ADMINISTRATION

MEP Upgrades and Remodel

3848 HARRISON BLVD.
OGDEN, UTAH 84401

Issued

No.	Date	Description
1	01.16.15	DFCM PLAN REVIEW
1	02.03.15	BID DOCUMENTS

Revision

No.	Date	Description

DFCM Project No. 14031810
ECE Project No. 4703

Drawing Title

LEVEL 3 DEMOLITION FLOOR PLAN - SYSTEMS

Sheet Number

ED303

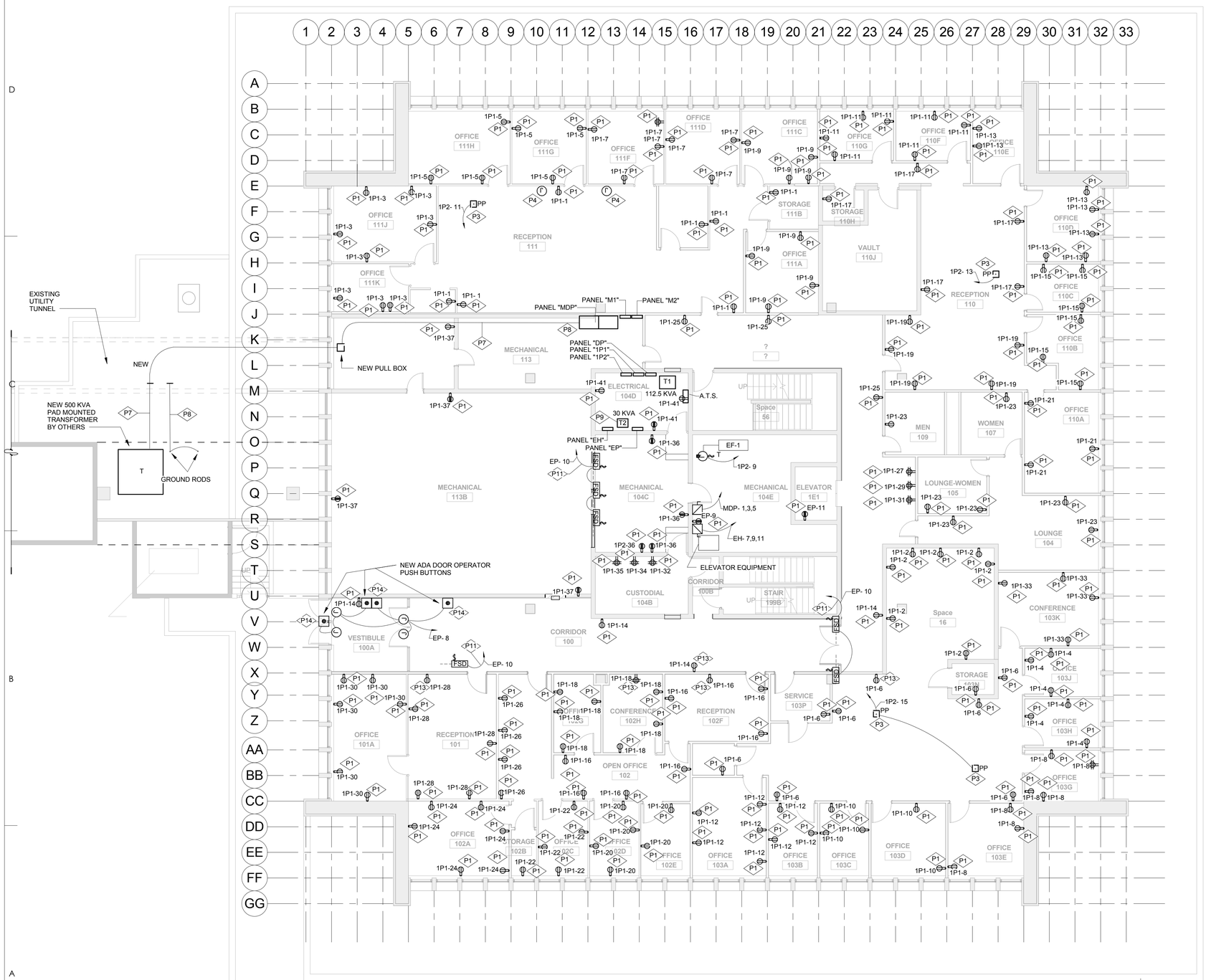

1 LEVEL 1 - POWER
1/8" = 1'-0"

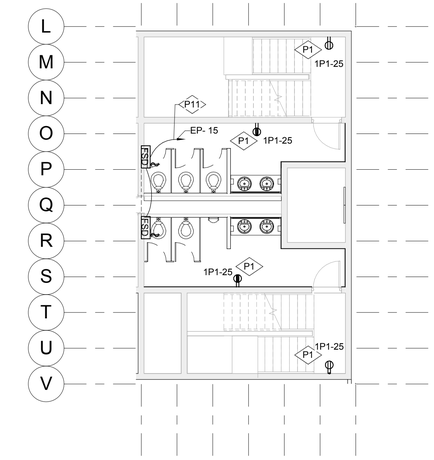

2 Level 1 MEZZANINE - POWER
1/8" = 1'-0"

REFERENCE NOTES:

P1	FURNISH AND INSTALL NEW DÉCOR TYPE 20 A. OUTLETS IN THE APPROXIMATE LOCATION SHOWN. TIE TO THE INDICATED 20A, 1-POLE CIRCUIT BREAKERS PROVIDE CONDUIT, CONDUCTORS, J-BOXES, ETC., FOR A COMPLETE INSTALLATION.
P3	CLEAN AND REINSTALL EXISTING POWER POLES IN THE APPROXIMATE LOCATION SHOWN. COORDINATE WITH WSU AND GENERAL CONTRACTOR FOR EXACT LOCATION.
P4	TIE THE FURNITURE WHIP TO CIRCUIT SHOWN. PROVIDE CONDUIT AND CONDUCTORS FOR A COMPLETE INSTALLATION.
P7	UNDER A SEPARATE PROJECT A NEW PAD MOUNTED TRANSFORMER WILL BE INSTALLED IN THE APPROXIMATE LOCATION SHOWN. FOUR (4) 4" CONDUITS WILL BE RUN FROM THE SECONDARY SIDE OF THE TRANSFORMER TO EXISTING UTILITY TUNNEL. A UFER GROUND WILL BE INSTALLED IN A NEW CONCRETE PAD UNDER A SEPARATE PROJECT. TIE THE SECONDARY SIDE OF THE TRANSFORMER TO THE NEW MAIN DISTRIBUTION PANEL. RUN CONDUIT INSIDE THE EXISTING TUNNEL. REFER TO POWER SINGLE LINE DIAGRAM FOR MORE INFORMATION. EXTEND EXISTING UFER GROUND TO GROUND BUS BAR IN MAIN DISTRIBUTION PANEL. EXOTHERMICALLY WELD THE CABLES TOGETHER.
P8	INSTALL MAIN DISTRIBUTION PANEL IN APPROXIMATE LOCATION SHOWN. COORDINATE WITH ENGINEER FOR EXACT LOCATION. BRACE ALL FOUR CORNERS TO CONCRETE FLOOR. REFER TO POWER SINGLE LINE DIAGRAM FOR MORE INFORMATION.
P9	INSTALL ONE OF THE EXISTING 30 KVA TRANSFORMER IN THE APPROXIMATE LOCATION. BRACE THE TRANSFORMER TO CONCRETE FLOOR.
P11	TIE THE FIRE SMOKE DAMPERS TO THE CIRCUIT SHOWN THROUGH FIRE ALARM CONTROL PANEL. DAMPERS ARE TO CLOSE WHEN FIRE ALARM SYSTEM IS ON ALARM. COORDINATE WITH MECHANICAL CONTRACTOR FOR EXACT LOCATION.
P13	INSTALL NEW DEVICES IN THE NEW WALL. PROVIDE CONDUIT AND CONDUCTORS FOR A COMPLETE INSTALLATION.
P14	FURNISH AND INSTALL THE PUSH BUTTONS FOR ADA DOOR OPERATORS IN THE APPROXIMATE LOCATION SHOWN. COORDINATE WITH GENERAL CONTRACTOR FOR EXACT LOCATION. TIE THE DOOR OPERATORS TO CIRCUIT SHOWN. PROVIDE CONDUIT AND CONDUCTORS FOR A COMPLETE INSTALLATION.

SPECIAL NOTES:

1. DESIRED CIRCUITRY HAS BEEN SHOWN ON THE FLOOR PLANS FOR DUPLEX OUTLET HOW EVER CONTRACTOR IS ALLOWED TO MODIFIED CIRCUIT IN ORDER TO UTILIZE EXISTING CONDUIT AS MUCH AS POSSIBLE AS LONG AS FOLLOWING REQUIREMENTS ARE MET:

   a. NO MORE THAN TWO OFFICES CAN BE TIED TO A 20 AMP. CIRCUIT BREAKER.

   b. DEVICES IN CORRIDOR, MECHANICAL ROOM, JANITOR, AND PUBLIC SPACES CANNOT BE TIED TO THE SAME CIRCUIT AS OFFICES, RECEPTION DESK, ETC. WHERE DUPLEX OUTLETS ARE TIED TO COMPUTERS.

   c. DRAWINGS MUST BE MARKED ON DAILY BASIS TO SHOW ANY CHANGES.

SANDERS ASSOCIATES ARCHITECTS
2668 Grant Avenue
Ogden, UT 84401
P : 801.621.7303
www.sandersarch.com

Seal

Consultant

E.C.E. LLC
Electrical Consulting Engineers
939 So. West Temple
Salt Lake City, Utah 84101
Telephone (801) 521-8007
Email: Admin@eceonline.com

Project Name

WSU- MILLER ADMINISTRATION

MEP Upgrades and Remodel

3848 HARRISON BLVD.
OGDEN, UTAH 84401

Issued

No.	Date	Description
1	01.16.15	DFCM PLAN REVIEW
1	02.03.15	BID DOCUMENTS

Revision

No.	Date	Description

DFCM Project No. 14031810
ECE Project No. 4703

Drawing Title

LEVEL 1 FLOOR PLAN - POWER

Sheet Number

EE101

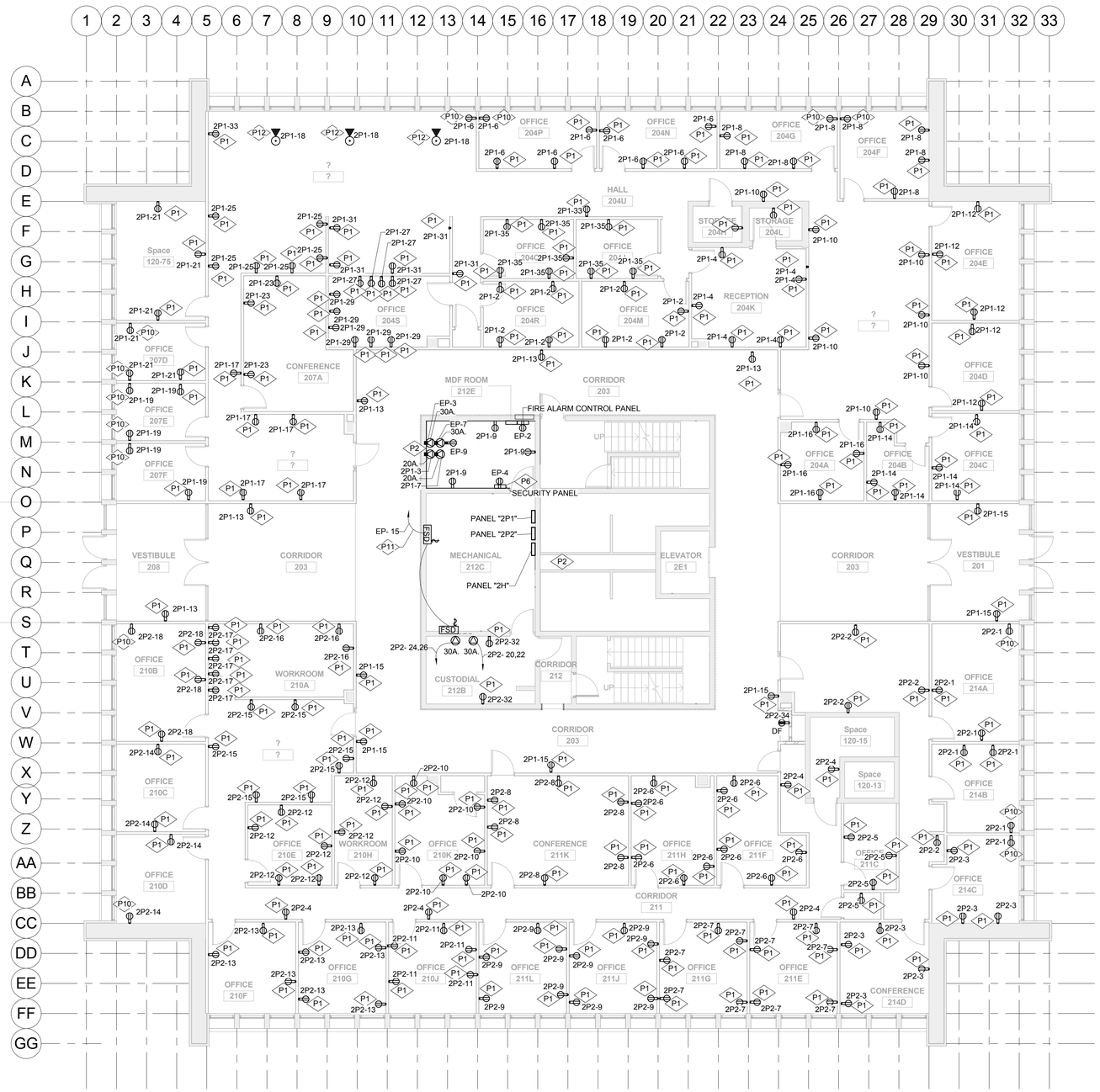

1 LEVEL 2 - POWER
1/8" = 1'-0"

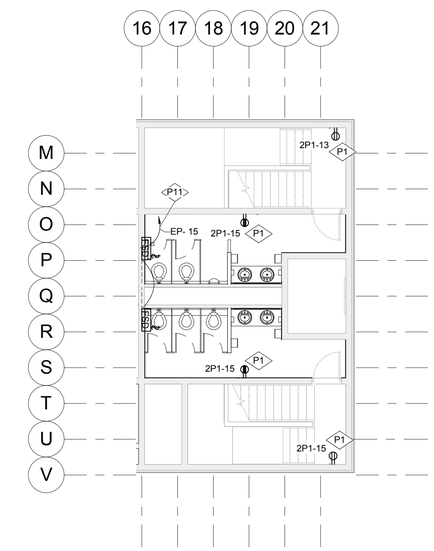

2 Level 2 MEZZANINE - POWER
1/8" = 1'-0"

REFERENCE NOTES:

P1	FURNISH AND INSTALL NEW DÉCOR TYPE 20 A. OUTLETS IN THE APPROXIMATE LOCATION SHOWN. TIE TO THE INDICATED 20A, 1-POLE CIRCUIT BREAKERS PROVIDE CONDUIT, CONDUCTORS, J-BOXES, ETC., FOR A COMPLETE INSTALLATION.
P2	FURNISH AND INSTALL TWO (2) L6-20 AND TWO (2) L6-30 PLUGS AND ONE DUPLEX OUTLET IN THE APPROXIMATE LOCATION SHOWN. STACK THE OUTLETS ON TOP OF EACH OTHER ABOVE THE RACK. COORDINATE EXACT LOCATION WITH WSU IT GROUP. UTILIZE 3#10 THHN CONDUCTORS FOR 30 AMP PLUGS.
P6	CLEAN AND TIE THE EXISTING SECURITY PANELS TO A 20 AMP, 1-POLE CIRCUIT BREAKER (EP-8) IN EMERGENCY PANEL.
P10	FURNISH AND INSTALL A NEW DUPLEX OUTLET IN THE EXISTING WALL. PATCH AND PAINT THE WALLS. COORDINATE WITH GENERAL CONTRACTOR. MC CABLES ARE ALLOWED IN ENCLOSED WALLS FOR THESE DEVICES.
P11	TIE THE FIRE SMOKE DAMPERS TO THE CIRCUIT SHOWN THROUGH FIRE ALARM CONTROL PANEL. DAMPERS ARE TO CLOSE WHEN FIRE ALARM SYSTEM IS ON ALARM. COORDINATE WITH MECHANICAL CONTRACTOR FOR EXACT LOCATION.
P12	FURNISH AND INSTALL A NEW POKE-THRU, WIREMOLD CAT # EVOLUTION 6AT SERIES WITH TWO (2) DUPLEX OUTLET AND SINGLE GANG OUTLET FOR DATA. COLOR OF COVER PLATE BY ARCHITECT. COORDINATE EXACT LOCATION OF CORE DRILL WITH ARCHITECT AND WSU. RUN A 1-1/2" CONDUIT TO CEILING PLENUM FOR DATA.

SPECIAL NOTES:

1. DESIRED CIRCUITRY HAS BEEN SHOWN ON THE FLOOR PLANS FOR DUPLEX OUTLET HOW EVER CONTRACTOR IS ALLOWED TO MODIFIED CIRCUIT IN ORDER TO UTILIZE EXISTING CONDUIT AS MUCH AS POSSIBLE AS LONG AS FOLLOWING REQUIREMENTS ARE MET:

   a. NO MORE THAN TWO OFFICES CAN BE TIED TO A 20 AMP. CIRCUIT BREAKER.

   b. DEVICES IN CORRIDOR, MECHANICAL ROOM, JANITOR, AND PUBLIC SPACES CANNOT BE TIED TO THE SAME CIRCUIT AS OFFICES, RECEPTION DESK, ETC. WHERE DUPLEX OUTLETS ARE TIED TO COMPUTERS.

   c. DRAWINGS MUST BE MARKED ON DAILY BASIS TO SHOW ANY CHANGES.

SANDERS ASSOCIATES ARCHITECTS
2668 Grant Avenue
Ogden, UT 84401
P : 801.621.7303
www.sandersarch.com

Seal

Consultant

E.C.E. LLC
Electrical Consulting Engineers
939 So. West Temple
Salt Lake City, Utah 84101
Telephone (801) 521-8007
Email: Admin@eceonline.com

Project Name

WSU- MILLER ADMINISTRATION

MEP Upgrades and Remodel

3848 HARRISON BLVD.
OGDEN, UTAH 84401

Issued

No.	Date	Description
1	01.16.15	DFCM PLAN REVIEW
1	02.03.15	BID DOCUMENTS

Revision

No.	Date	Description

DFCM Project No. 14031810
ECE Project No. 4703

Drawing Title

LEVEL 2 FLOOR PLAN - POWER

Sheet Number

EE102

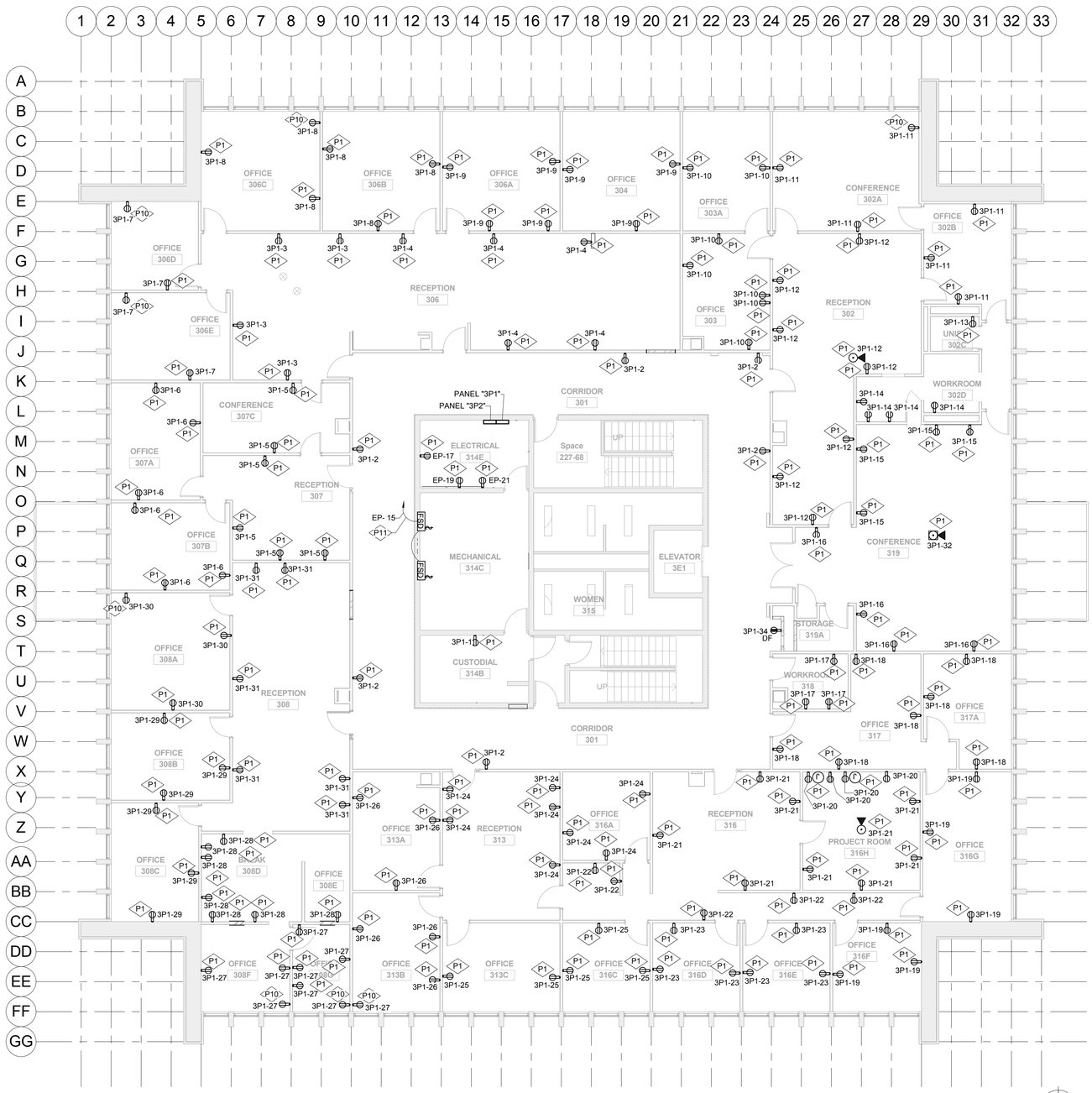

1 LEVEL 3 - POWER
1/8" = 1'-0"

REFERENCE NOTES:

P1	FURNISH AND INSTALL NEW DÉCOR TYPE 20 A. OUTLETS IN THE APPROXIMATE LOCATION SHOWN. TIE TO THE INDICATED 20A, 1-POLE CIRCUIT BREAKERS PROVIDE CONDUIT, CONDUCTORS, J-BOXES, ETC., FOR A COMPLETE INSTALLATION.
P10	FURNISH AND INSTALL A NEW DUPLEX OUTLET IN THE EXISTING WALL. PATCH AND PAINT THE WALLS. COORDINATE WITH GENERAL CONTRACTOR. MC CABLES ARE ALLOWED IN ENCLOSED WALLS FOR THESE DEVICES.
P11	TIE THE FIRE SMOKE DAMPERS TO THE CIRCUIT SHOWN THROUGH FIRE ALARM CONTROL PANEL. DAMPERS ARE TO CLOSE WHEN FIRE ALARM SYSTEM IS ON ALARM. COORDINATE WITH MECHANICAL CONTRACTOR FOR EXACT LOCATION.

SPECIAL NOTES:

1. DESIRED CIRCUITRY HAS BEEN SHOWN ON THE FLOOR PLANS FOR DUPLEX OUTLET HOW EVER CONTRACTOR IS ALLOWED TO MODIFIED CIRCUIT IN ORDER TO UTILIZE EXISTING CONDUIT AS MUCH AS POSSIBLE AS LONG AS FOLLOWING REQUIREMENTS ARE MET:

a. NO MORE THAN TWO OFFICES CAN BE TIED TO A 20 AMP. CIRCUIT BREAKER.

b. DEVICES IN CORRIDOR, MECHANICAL ROOM, JANITOR, AND PUBLIC SPACES CANNOT BE TIED TO THE SAME CIRCUIT AS OFFICES, RECEPTION DESK, ETC. WHERE DUPLEX OUTLETS ARE TIED TO COMPUTERS.

c. DRAWINGS MUST BE MARKED ON DAILY BASIS TO SHOW ANY CHANGES.

SANDERS ASSOCIATES ARCHITECTS
2668 Grant Avenue
Ogden, UT 84401
P : 801.621.7303
www.sandersarch.com

Seal

Consultant

E.C.E. LLC
Electrical Consulting Engineers
939 So. West Temple
Salt Lake City, Utah 84101
Telephone (801) 521-8007
Email: Admin@eceonline.com

Project Name

WSU- MILLER ADMINISTRATION

MEP Upgrades and Remodel

3848 HARRISON BLVD.
OGDEN, UTAH 84401

Issued

No.	Date	Description
1	01.16.15	DFCM PLAN REVIEW
1	02.03.15	BID DOCUMENTS

Revision

No.	Date	Description

DFCM Project No. 14031810
ECE Project No. 4703

Drawing Title

LEVEL 3 FLOOR PLAN - POWER

Sheet Number

EE103

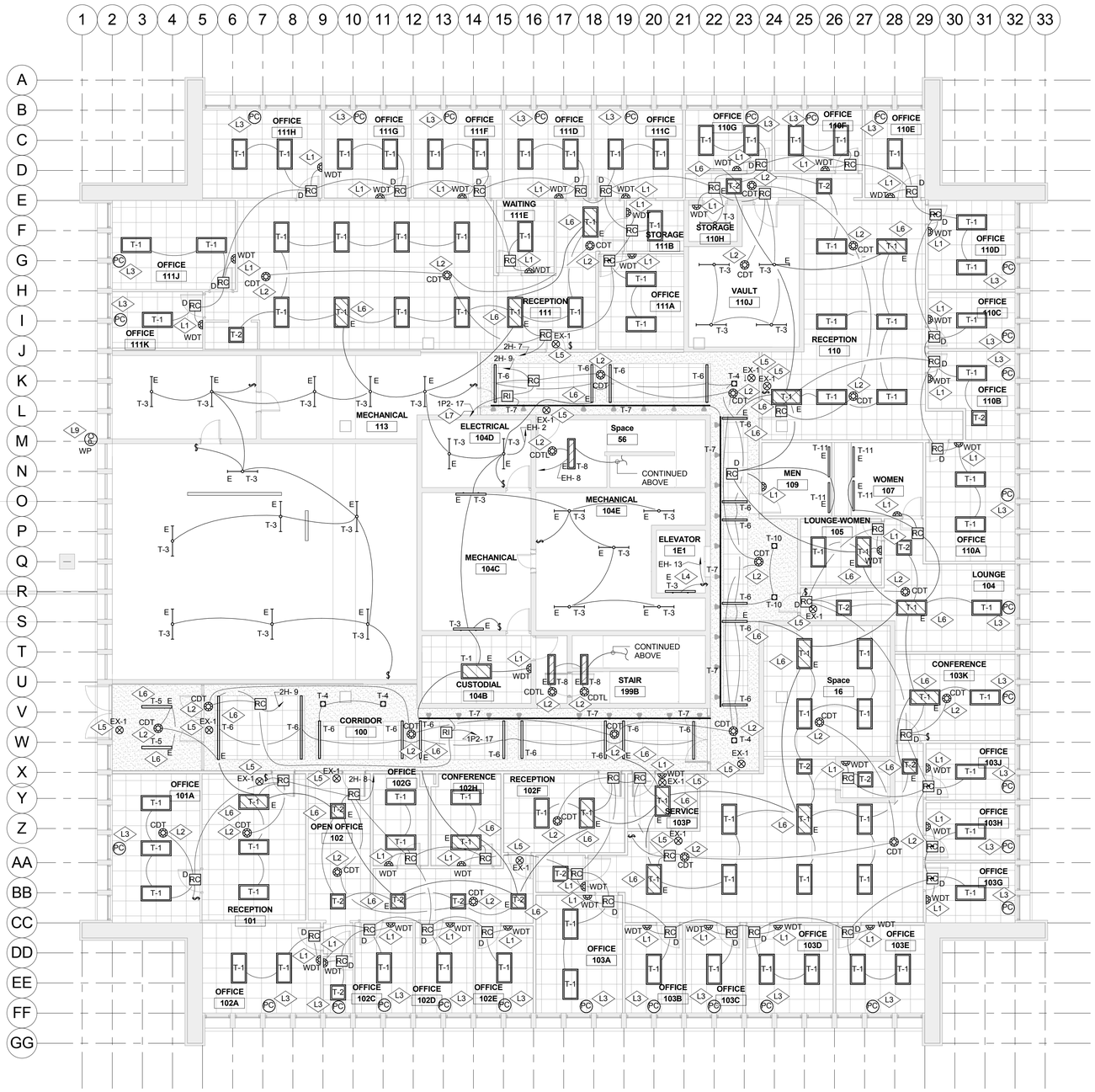

1 LEVEL 1 - LIGHTING
1/8" = 1'-0"

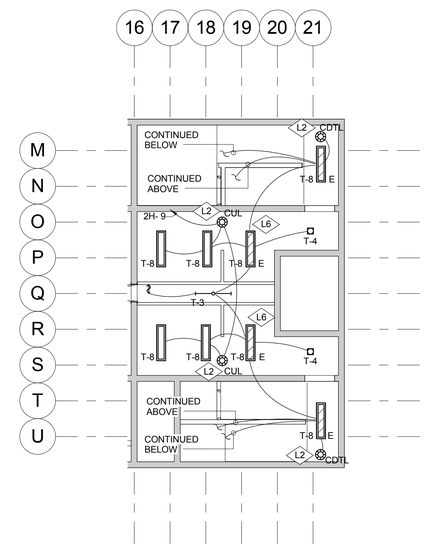

2 LEVEL 1 MEZZANINE - LIGHTING
1/8" = 1'-0"

REFERENCE NOTES:

L1 FURNISH AND INSTALL A DIGITAL WALL MOUNTED MOTION SENSOR AND ROOM CONTROLLER IN THE APPROXIMATE LOCATION SHOWN. TIE MOTION SENSOR TO ROOM CONTROLLER WITH CAT-5 CABLE. TIE ROOM CONTROLLER TO LIGHTS. SEE MANUFACTURER WIRING DIAGRAM FOR MORE INFORMATION. SEE LIGHTING CONTROL SYMBOLS SCHEDULE FOR MORE INFORMATION.

L2 FURNISH AND INSTALL A DIGITAL CEILING MOUNTED MOTION SENSOR AND ROOM CONTROLLER IN THE APPROXIMATE LOCATION SHOWN. TIE MOTION SENSOR TO ROOM CONTROLLER WITH CAT-5 CABLE. TIE ROOM CONTROLLER TO LIGHTS. SEE MANUFACTURER WIRING DIAGRAM FOR MORE INFORMATION. SEE LIGHTING CONTROL SYMBOLS SCHEDULE FOR MORE INFORMATION.

L3 FURNISH AND INSTALL A DIGITAL CEILING MOUNTED PHOTOCELL IN THE APPROXIMATE LOCATION SHOWN. TIE PHOTOCELL TO THE ROOM CONTROLLER WITH CAT5 CABLE. SEE MANUFACTURER WIRING DIAGRAM FOR MORE INFORMATION. SEE LIGHTING CONTROL SYMBOLS SCHEDULE FOR MORE INFORMATION.

L4 REMOVE AND INSTALL A NEW LIGHT FIXTURE IN THE ELEVATOR PIT. TIE TO NEW CIRCUIT SHOWN.

L5 TIE THE EXIT SIGN TO THE NEAREST UNSWITCHED EMERGENCY LIGHTING CIRCUIT.

L6 TIE EMERGENCY LIGHT TO A BODINE TRANSFER SWITCH (CAT. #GTD OR APPROVED EQUAL) SUCH THAT WHEN COMMERCIAL POWER FAILS THE EMERGENCY LIGHTS COME ON AUTOMATICALLY REGARDLESS OF POSITION OF LIGHT SWITCHES. PROVIDE UNSWITCHED POWER TO TRANSFER SWITCH. REFER TO MANUFACTURER WIRING DIAGRAM FOR MORE INFORMATION. NORMALLY THESE LIGHT FIXTURES ARE CONTROLLED BY LIGHT SWITCHES.

L7 FURNISH AND INSTALL A DIGITAL RELAY INTERFACE WITH 120 VOLT OUTPUT IN THE APPROXIMATE LOCATION SHOWN. TIE RELAY INTERFACE TO ROOM CONTROLLER WITH CAT-5 CABLE. TIE RELAY INTERFACE TO TRACK LIGHTS. TRACK LIGHTS ARE TO BE CONTROLLED BY THE MOTION SENSORS IN THE CORRIDOR. SEE MANUFACTURER WIRING DIAGRAM FOR MORE INFORMATION. SEE LIGHTING CONTROL SYMBOLS SCHEDULE FOR MORE INFORMATION.

L9 FURNISH AND INSTALL A PHOTOCELL ON THE EXTERIOR WALL IN THE APPROXIMATE LOCATION SHOWN TO CONTROL THE EXTERIOR LIGHTS. TIE PHOTOCELL TO LIGHTING CONTRACTOR. SEE MANUFACTURER WIRING DIAGRAM FOR MORE INFORMATION.

SPECIAL NOTE:

1. INSTALL EXIT SIGNS ABOVE THE EXIT DOORS. WHERE THE DOOR IS CLOSE TO THE DROPPED CEILING, INSTALL THE EXIT SIGN NEXT TO DOOR ON LATCH SIDE.

SANDERS ASSOCIATES ARCHITECTS
2668 Grant Avenue
Ogden, UT 84401
P : 801.621.7303
www.sandersarch.com

Seal

LICENSED PROFESSIONAL ENGINEER #172577 02-03-15 STATE OF UTAH

Consultant

E.C.E. LLC
Electrical Consulting Engineers
939 So. West Temple
Salt Lake City, Utah 84101
Telephone (801) 521-8007
Email: Admin@eceonline.com

Project Name

WSU- MILLER ADMINISTRATION

MEP Upgrades and Remodel

3848 HARRISON BLVD.
OGDEN, UTAH 84401

Issued

No.	Date	Description
1	01.16.15	DFCM PLAN REVIEW
1	02.03.15	BID DOCUMENTS

Revision

No.	Date	Description

DFCM Project No. 14031810
ECE Project No. 4703

Drawing Title

LEVEL 1 FLOOR PLAN - LIGHTING

Sheet Number

EE201

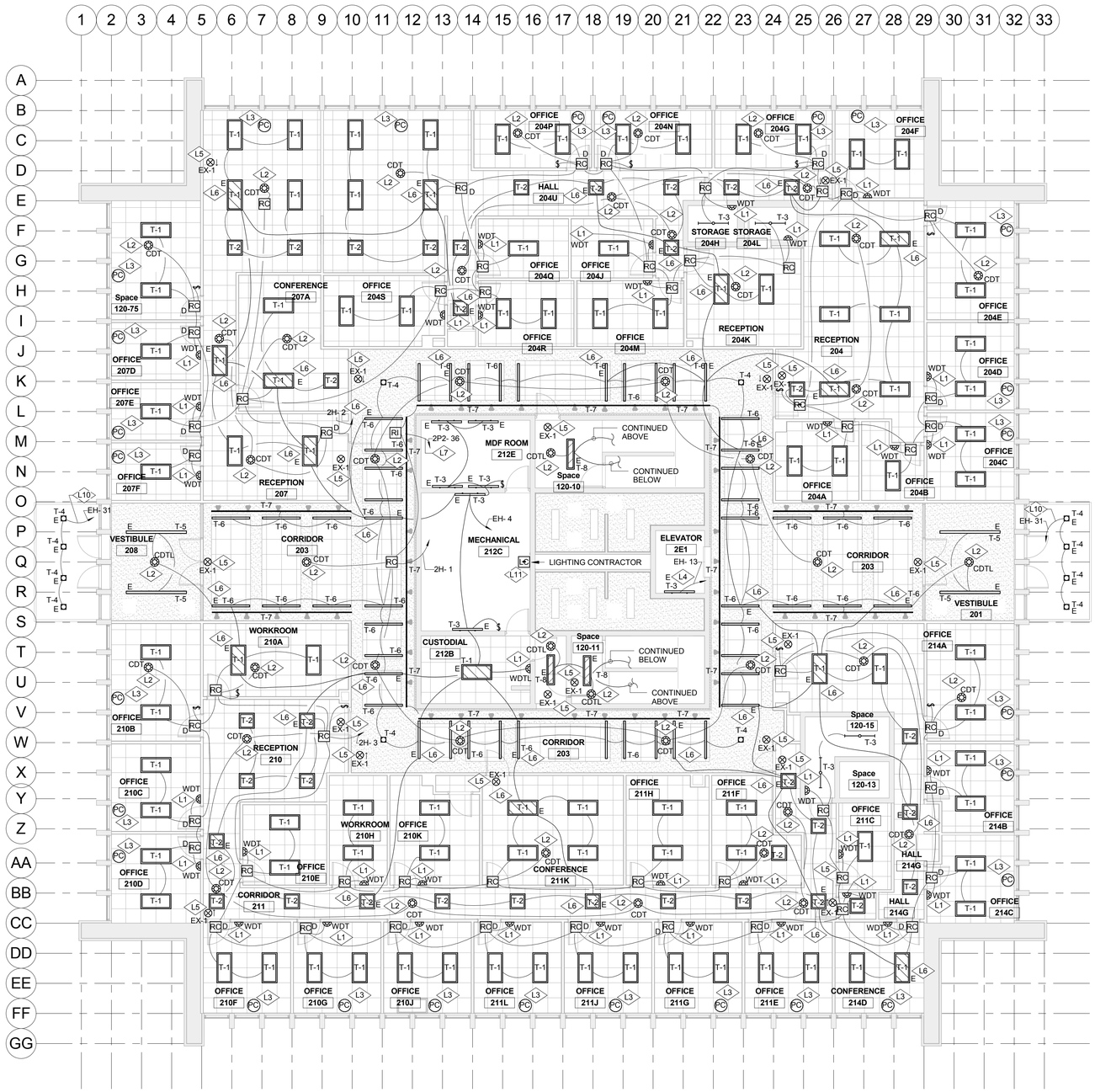

1 LEVEL 2 - LIGHTING
1/8" = 1'-0"

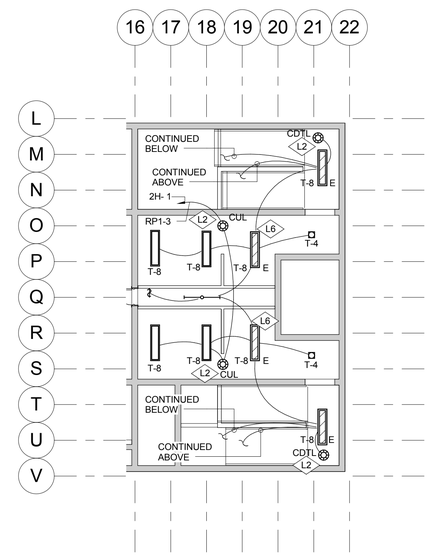

2 LEVEL 2 MEZZANINE - LIGHTING
1/8" = 1'-0"

REFERENCE NOTES:

L1 FURNISH AND INSTALL A DIGITAL WALL MOUNTED MOTION SENSOR AND ROOM CONTROLLER IN THE APPROXIMATE LOCATION SHOWN. TIE MOTION SENSOR TO ROOM CONTROLLER WITH CAT-5 CABLE. TIE ROOM CONTROLLER TO LIGHTS. SEE MANUFACTURER WIRING DIAGRAM FOR MORE INFORMATION. SEE LIGHTING CONTROL SYMBOLS SCHEDULE FOR MORE INFORMATION.

L2 FURNISH AND INSTALL A DIGITAL CEILING MOUNTED MOTION SENSOR AND ROOM CONTROLLER IN THE APPROXIMATE LOCATION SHOWN. TIE MOTION SENSOR TO ROOM CONTROLLER WITH CAT-5 CABLE. TIE ROOM CONTROLLER TO LIGHTS. SEE MANUFACTURER WIRING DIAGRAM FOR MORE INFORMATION. SEE LIGHTING CONTROL SYMBOLS SCHEDULE FOR MORE INFORMATION.

L3 FURNISH AND INSTALL A DIGITAL CEILING MOUNTED PHOTOCELL IN THE APPROXIMATE LOCATION SHOWN. TIE PHOTOCELL TO THE ROOM CONTROLLER WITH CAT5 CABLE. SEE MANUFACTURER WIRING DIAGRAM FOR MORE INFORMATION. SEE LIGHTING CONTROL SYMBOLS SCHEDULE FOR MORE INFORMATION.

L4 REMOVE AND INSTALL A NEW LIGHT FIXTURE IN THE ELEVATOR PIT. TIE TO NEW CIRCUIT SHOWN.

L5 TIE THE EXIT SIGN TO THE NEAREST UNSWITCHED EMERGENCY LIGHTING CIRCUIT.

L6 TIE EMERGENCY LIGHT TO A BODINE TRANSFER SWITCH (CAT. #GTD OR APPROVED EQUAL) SUCH THAT WHEN COMMERCIAL POWER FAILS THE EMERGENCY LIGHTS COME ON AUTOMATICALLY REGARDLESS OF POSITION OF LIGHT SWITCHES. PROVIDE UNSWITCHED POWER TO TRANSFER SWITCH. REFER TO MANUFACTURER WIRING DIAGRAM FOR MORE INFORMATION. NORMALLY THESE LIGHT FIXTURES ARE CONTROLLED BY LIGHT SWITCHES.

L7 FURNISH AND INSTALL A DIGITAL RELAY INTERFACE WITH 120 VOLT OUTPUT IN THE APPROXIMATE LOCATION SHOWN. TIE RELAY INTERFACE TO ROOM CONTROLLER WITH CAT-5 CABLE. TIE RELAY INTERFACE TO TRACK LIGHTS. TRACK LIGHTS ARE TO BE CONTROLLED BY THE MOTION SENSORS IN THE CORRIDOR. SEE MANUFACTURER WIRING DIAGRAM FOR MORE INFORMATION. SEE LIGHTING CONTROL SYMBOLS SCHEDULE FOR MORE INFORMATION.

L10 TIE EXTERIOR UNDER CANOPY LIGHTS TO THE CIRCUIT SHOWN THROUGH THE 6-POLE LIGHTING CONTRACTOR. THESE LIGHTS ARE TO BE CONTROLLED BY THE EXTERIOR PHOTOCELL.

L11 FURNISH AND INSTALL A 6-POLE LIGHTING CONTRACTOR IN THE APPROXIMATE LOCATION SHOWN TO CONTROL THE EXTERIOR LIGHTS. TIE LIGHTING CONTRACTOR TO THE CAMPUS BMS SYSTEM. TIE THE EXISTING EXTERIOR LIGHTING CIRCUITS THROUGH THIS LIGHTING CONTRACTOR.

SPECIAL NOTE:

1. INSTALL EXIT SIGNS ABOVE THE EXIT DOORS. WHERE THE DOOR IS CLOSE TO THE DROPPED CEILING, INSTALL THE EXIT SIGN NEXT TO DOOR ON LATCH SIDE.

SANDERS ASSOCIATES ARCHITECTS
2668 Grant Avenue
Ogden, UT 84401
P : 801.621.7303
www.sandersarch.com

Seal

Consultant

E.C.E. LLC
Electrical Consulting Engineers
939 So. West Temple
Salt Lake City, Utah 84101
Telephone (801) 521-8007
Email: Admin@eceonline.com

Project Name

WSU- MILLER ADMINISTRATION

MEP Upgrades and Remodel

3848 HARRISON BLVD.
OGDEN, UTAH 84401

Issued

No.	Date	Description
1	01.16.15	DFCM PLAN REVIEW
1	02.03.15	BID DOCUMENTS

Revision

No.	Date	Description

DFCM Project No. 14031810

ECE Project No. 4703

Drawing Title

LEVEL 2 FLOOR PLAN - LIGHTING

Sheet Number

EE202

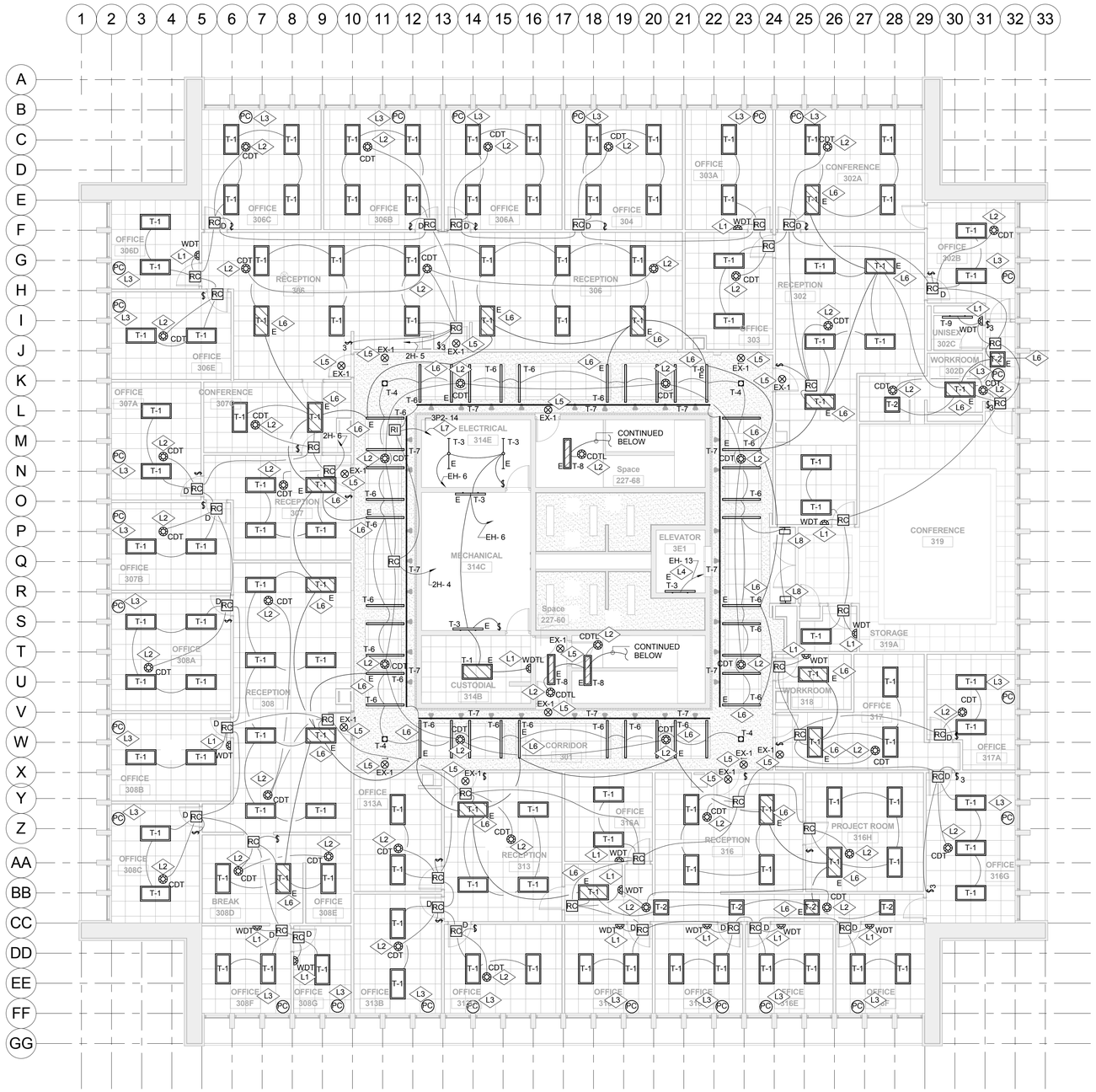

1 LEVEL 3 - LIGHTING
1/8" = 1'-0"

REFERENCE NOTES:

L1	FURNISH AND INSTALL A DIGITAL WALL MOUNTED MOTION SENSOR AND ROOM CONTROLLER IN THE APPROXIMATE LOCATION SHOWN. TIE MOTION SENSOR TO ROOM CONTROLLER WITH CAT-5 CABLE. TIE ROOM CONTROLLER TO LIGHTS. SEE MANUFACTURER WIRING DIAGRAM FOR MORE INFORMATION. SEE LIGHTING CONTROL SYMBOLS SCHEDULE FOR MORE INFORMATION.
L2	FURNISH AND INSTALL A DIGITAL CEILING MOUNTED MOTION SENSOR AND ROOM CONTROLLER IN THE APPROXIMATE LOCATION SHOWN. TIE MOTION SENSOR TO ROOM CONTROLLER WITH CAT-5 CABLE. TIE ROOM CONTROLLER TO LIGHTS. SEE MANUFACTURER WIRING DIAGRAM FOR MORE INFORMATION. SEE LIGHTING CONTROL SYMBOLS SCHEDULE FOR MORE INFORMATION.
L3	FURNISH AND INSTALL A DIGITAL CEILING MOUNTED PHOTOCELL IN THE APPROXIMATE LOCATION SHOWN. TIE PHOTOCELL TO THE ROOM CONTROLLER WITH CAT5 CABLE. SEE MANUFACTURER WIRING DIAGRAM FOR MORE INFORMATION. SEE LIGHTING CONTROL SYMBOLS SCHEDULE FOR MORE INFORMATION.
L4	REMOVE AND INSTALL A NEW LIGHT FIXTURE IN THE ELEVATOR PIT. TIE TO NEW CIRCUIT SHOWN.
L5	TIE THE EXIT SIGN TO THE NEAREST UNSWITCHED EMERGENCY LIGHTING CIRCUIT.
L6	TIE EMERGENCY LIGHT TO A BODINE TRANSFER SWITCH (CAT. #GTD OR APPROVED EQUAL) SUCH THAT WHEN COMMERCIAL POWER FAILS THE EMERGENCY LIGHTS COME ON AUTOMATICALLY REGARDLESS OF POSITION OF LIGHT SWITCHES. PROVIDE UNSWITCHED POWER TO TRANSFER SWITCH. REFER TO MANUFACTURER WIRING DIAGRAM FOR MORE INFORMATION. NORMALLY THESE LIGHT FIXTURES ARE CONTROLLED BY LIGHT SWITCHES.
L7	FURNISH AND INSTALL A DIGITAL RELAY INTERFACE WITH 120 VOLT OUTPUT IN THE APPROXIMATE LOCATION SHOWN. TIE RELAY INTERFACE TO ROOM CONTROLLER WITH CAT-5 CABLE. TIE RELAY INTERFACE TO TRACK LIGHTS. TRACK LIGHTS ARE TO BE CONTROLLED BY THE MOTION SENSORS IN THE CORRIDOR. SEE MANUFACTURER WIRING DIAGRAM FOR MORE INFORMATION. SEE LIGHTING CONTROL SYMBOLS SCHEDULE FOR MORE INFORMATION.
L8	TIE EXISTING LIGHT FIXTURE TO CORRIDOR LIGHTS.

SPECIAL NOTE:

1. INSTALL EXIT SIGNS ABOVE THE EXIT DOORS. WHERE THE DOOR IS CLOSE TO THE DROPPED CEILING, INSTALL THE EXIT SIGN NEXT TO DOOR ON LATCH SIDE.

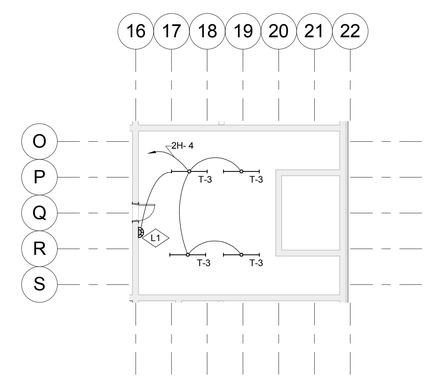

2 Level 3 MEZZANINE - LIGHTING
1/8" = 1'-0"

SANDERS ASSOCIATES ARCHITECTS
2668 Grant Avenue
Ogden, UT 84401
P : 801.621.7303
www.sandersarch.com

Seal

Consultant

E.C.E. LLC
Electrical Consulting Engineers
939 So. West Temple
Salt Lake City, Utah 84101
Telephone (801) 521-8007
Email: Admin@eceonline.com

Project Name

WSU- MILLER ADMINISTRATION

MEP Upgrades and Remodel

3848 HARRISON BLVD.
OGDEN, UTAH 84401

Issued

No.	Date	Description
1	01.16.15	DFCM PLAN REVIEW
1	02.03.15	BID DOCUMENTS

Revision

No.	Date	Description

DFCM Project No. 14031810
ECE Project No. 4703

Drawing Title

LEVEL 3 FLOOR PLAN - LIGHTING

Sheet Number

EE203

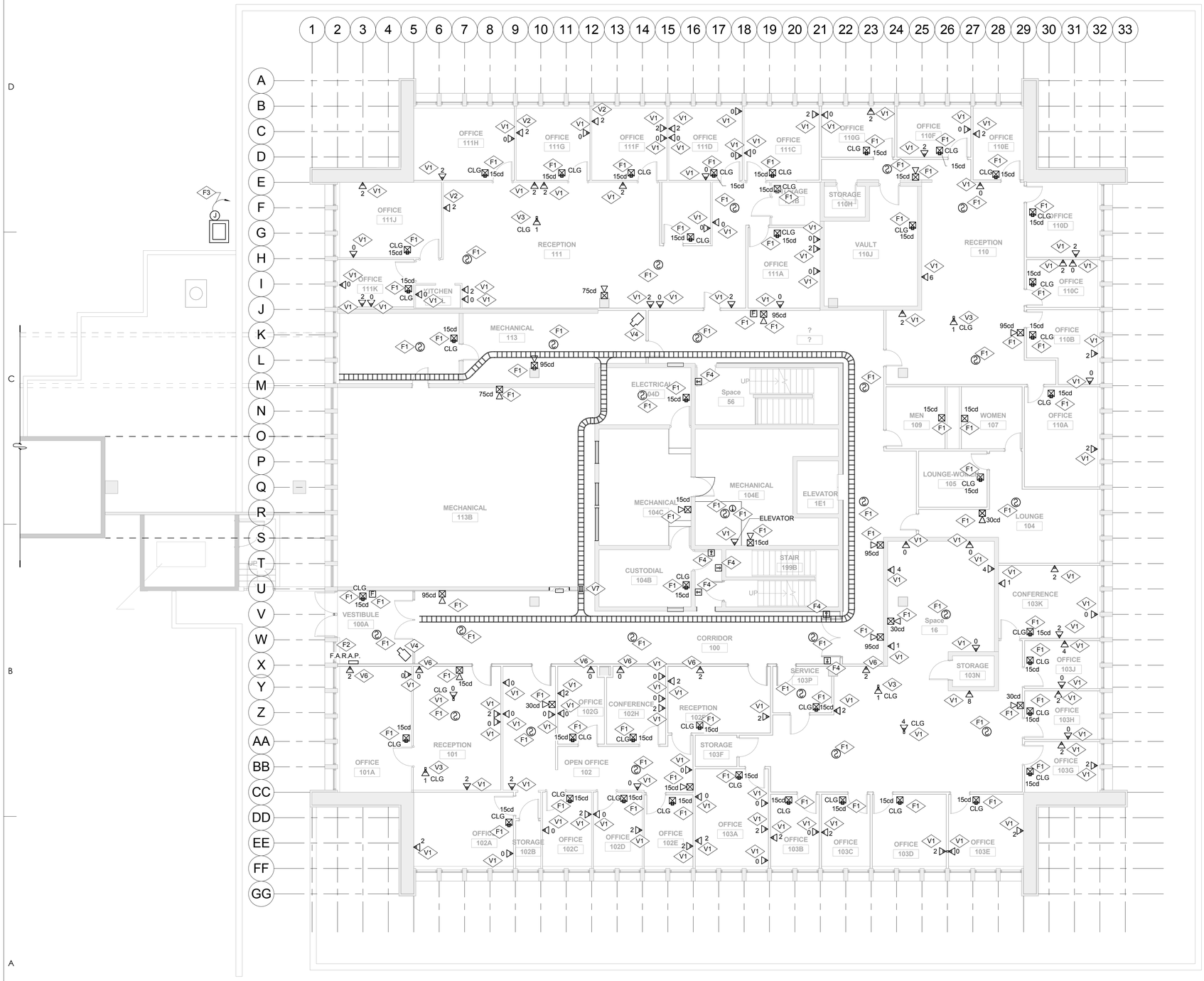

1 LEVEL 1 - SYSTEMS
1/8" = 1'-0"

REFERENCE NOTES:

F1	FURNISH AND INSTALL ADDRESSABLE FIRE ALARM DEVICES IN THE APPROXIMATE LOCATION SHOWN. TIE TO THE FIRE ALARM CONTROL PANEL IN CLASS "A" LOOP. IN AND OUT CABLES TO DEVICES SHALL RUN IN SEPARATE CONDUITS.
F2	FURNISH AND INSTALL FIRE ALARM REMOTE ANNUNCIATION PANEL IN THE APPROXIMATE LOCATION SHOWN. TIE TO FIRE ALARM CONTROL PANEL FOR A COMPLETE INSTALLATION. REFER TO RISER DIAGRAM FOR MORE INFORMATION.
F3	TIE POST INDICATING VALVE TO FIRE ALARM SYSTEM. PROVIDE CONDUIT AND CONDUCTORS FOR A COMPLETE INSTALLATION. COORDINATE WITH GENERAL CONTRACTOR FOR EXACT LOCATION.
F4	TIE THE NEW DOOR HOLDERS AND EXISTING DOOR HOLDERS TO A 20 AMP, 1-POLE CIRCUIT BREAKER IN PANEL EP-6 THROUGH FIRE ALARM CONTROL PANEL FOR AUTOMATIC RELEASE. PROVIDE CONDUIT AND CONDUCTORS FOR A COMPLETE INSTALLATION.
V1	EXISTING DATA OUTLETS WILL BE UTILIZED BY OTHERS TO RUN NEW DATA CABLES AND INSTALL NEW JACKS. PROVIDE BLANK COVER PLATE FOR ALL EMPTY J-BOXES WHICH SHOW A NUMBER "0" NEXT TO THE THEM.
V2	NEW LOCATION OF DATA OUTLET. THIS WORK WILL BE DONE BY OTHERS. IT IS SHOWN ONLY FOR INFORMATION.
V3	FURNISH AND INSTALL A 4"X4"X2-1/8" DEEP J-BOX ON THE CEILING TILE FOR A WIRELESS ANTENNA. SUPPORT THE J-BOX FROM THE CEILING DECK.
V4	FURNISH AND INSTALL A 4"X4"X2-1/8" DEEP J-BOX IN APPROXIMATE LOCATION SHOWN FOR SECURITY CAMERA. RUN A 3/4" CONDUIT FROM THE J-BOX TO THE NEAREST CABLE TRAY ON THE SAME FLOOR. COORDINATE WITH THE WSU IT GROUP FOR EXACT LOCATION.
V6	FURNISH AND INSTALL A NEW 4"X4"X2-1/8" DEEP J-BOX WITH SINGLE GANG MUD RING FOR DATA OUTLET. RUN A 1" CONDUIT TO CEILING PLENUM. TURN THE CONDUIT 90 DEGREES TOWARD THE CABLE TRAY AND PROVIDE PVC BUSHING AND PULL STRING.
V7	STOP THE CABLE TRAY BY THE EDGE OF ALL FIRE WALLS AND PROVIDE (3) 3" CONDUIT PVC SLEEVE IN THE FIRE WALLS. FIRE SEAL AROUND THE CONDUIT. COORDINATE WITH GENERAL CONTRACTOR.

SPECIAL NOTES:

1. COLOR OF ALL FIRE ALARM DEVICES TO BE WHITE.

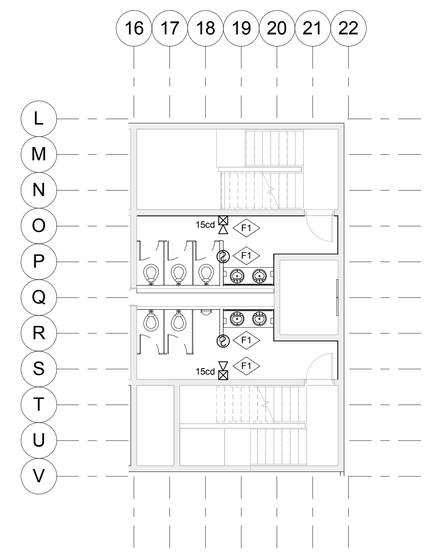

2 Level 1 MEZZANINE - SYSTEMS
1/8" = 1'-0"

SANDERS ASSOCIATES ARCHITECTS
2668 Grant Avenue
Ogden, UT 84401
P : 801.621.7303
www.sandersarch.com

Seal

Consultant

E.C.E. LLC
Electrical Consulting Engineers
939 So. West Temple
Salt Lake City, Utah 84101
Telephone (801) 521-8007
Email: Admin@eceonline.com

Project Name

WSU- MILLER ADMINISTRATION

MEP Upgrades and Remodel

3848 HARRISON BLVD.
OGDEN, UTAH 84401

Issued

No.	Date	Description
1	01.16.15	DFCM PLAN REVIEW
1	02.03.15	BID DOCUMENTS

Revision

No.	Date	Description

DFCM Project No. 14031810
ECE Project No. 4703

Drawing Title

LEVEL 1 FLOOR PLAN - SYSTEMS

Sheet Number

EE301

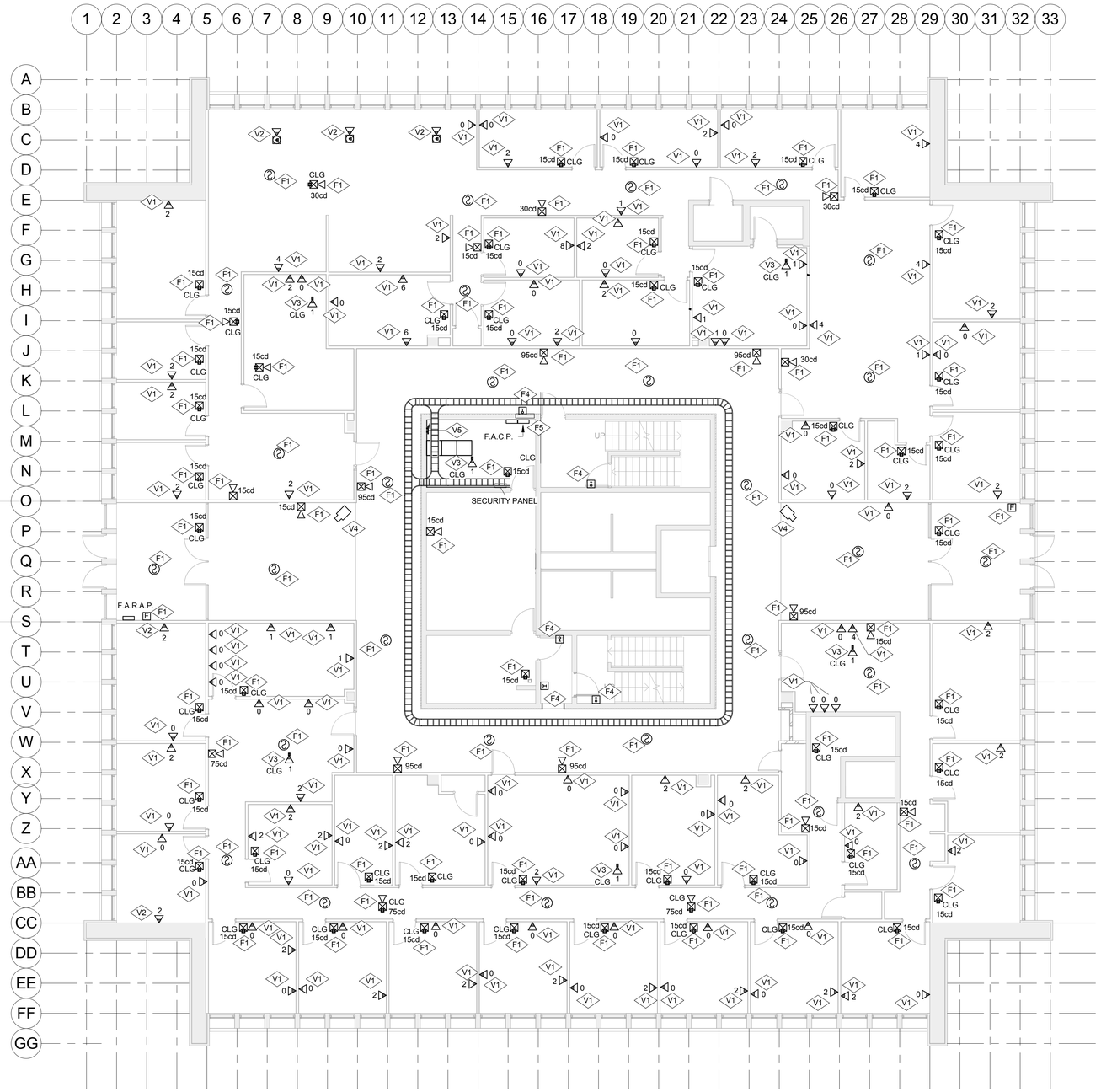

1 LEVEL 2 - SYSTEMS
1/8" = 1'-0"

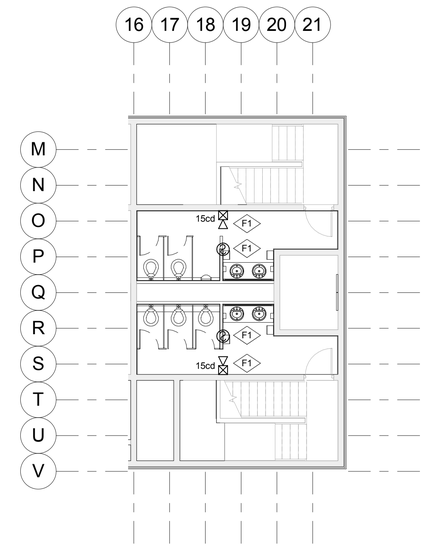

2 Level 2 MEZZANINE - SYSTEMS
1/8" = 1'-0"

REFERENCE NOTES:

F1	FURNISH AND INSTALL ADDRESSABLE FIRE ALARM DEVICES IN THE APPROXIMATE LOCATION SHOWN. TIE TO THE FIRE ALARM CONTROL PANEL IN CLASS "A" LOOP. IN AND OUT CABLES TO DEVICES SHALL RUN IN SEPARATE CONDUITS.
F4	TIE THE NEW DOOR HOLDERS AND EXISTING DOOR HOLDERS TO A 20 AMP, 1-POLE CIRCUIT BREAKER IN PANEL EP-6 THROUGH FIRE ALARM CONTROL PANEL FOR AUTOMATIC RELEASE. PROVIDE CONDUIT AND CONDUCTORS FOR A COMPLETE INSTALLATION.
F5	FURNISH AND INSTALL A NEW FIRE ALARM CONTROL PANEL IN THE APPROXIMATE LOCATION SHOWN. REFER TO FIRE ALARM RISER DIAGRAM FOR MORE INFORMATION.
V1	EXISTING DATA OUTLETS WILL BE UTILIZED BY OTHERS TO RUN NEW DATA CABLES AND INSTALL NEW JACKS. PROVIDE BLANK COVER PLATE FOR ALL EMPTY J-BOXES WHICH SHOW A NUMBER "0" NEXT TO THE THEM.
V2	NEW LOCATION OF DATA OUTLET. THIS WORK WILL BE DONE BY OTHERS. IT IS SHOWN ONLY FOR INFORMATION.
V3	FURNISH AND INSTALL A 4"X4"X2-1/8" DEEP J-BOX ON THE CEILING TILE FOR A WIRELESS ANTENNA. SUPPORT THE J-BOX FROM THE CEILING DECK.
V4	FURNISH AND INSTALL A 4"X4"X2-1/8" DEEP J-BOX IN APPROXIMATE LOCATION SHOWN FOR SECURITY CAMERA. RUN A 3/4" CONDUIT FROM THE J-BOX TO THE NEAREST CABLE TRAY ON THE SAME FLOOR. COORDINATE WITH THE WSU IT GROUP FOR EXACT LOCATION.
V5	FURNISH AND INSTALL AN ISOLATED COPPER GROUND BUS BAR IN THE APPROXIMATE LOCATION SHOWN. REFER TO GROUND BUS BAR DETAIL FOR MORE INFORMATION. COORDINATE WITH WSU IT GROUP FOR EXACT LOCATION AND HEIGHT. RUN #1/0 THHN COPPER TO THE GROUND BUS BAR IN MAIN DISTRIBUTION PANEL. USE TWO HOLE CRIMP TYPE CONNECTOR AT BOTH ENDS.

SPECIAL NOTES:

1. COLOR OF ALL FIRE ALARM DEVICES TO BE WHITE.

SANDERS ASSOCIATES ARCHITECTS
2668 Grant Avenue
Ogden, UT 84401
P : 801.621.7303
www.sandersarch.com

Seal

Consultant

E.C.E. LLC
Electrical Consulting Engineers
939 So. West Temple
Salt Lake City, Utah 84101
Telephone (801) 521-8007
Email: Admin@eceonline.com

Project Name

WSU- MILLER ADMINISTRATION

MEP Upgrades and Remodel

3848 HARRISON BLVD.
OGDEN, UTAH 84401

Issued

No.	Date	Description
1	01.16.15	DFCM PLAN REVIEW
1	02.03.15	BID DOCUMENTS

Revision

No.	Date	Description

DFCM Project No. 14031810

ECE Project No. 4703

Drawing Title

LEVEL 2 FLOOR PLAN - SYSTEMS

Sheet Number

EE302

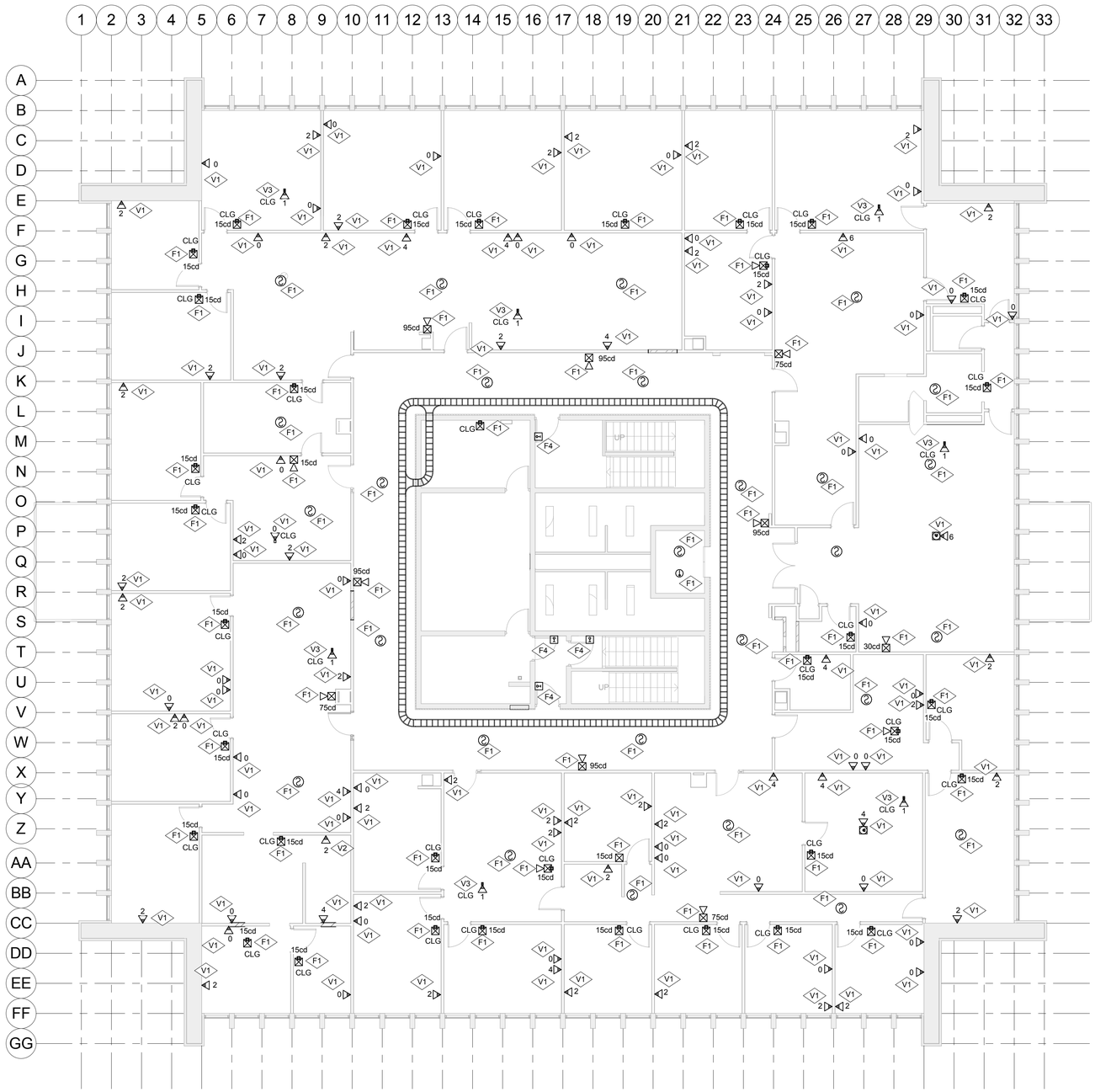

1 LEVEL 3 - SYSTEMS
1/8" = 1'-0"

REFERENCE NOTES:

F1	FURNISH AND INSTALL ADDRESSABLE FIRE ALARM DEVICES IN THE APPROXIMATE LOCATION SHOWN. TIE TO THE FIRE ALARM CONTROL PANEL IN CLASS "A" LOOP. IN AND OUT CABLES TO DEVICES SHALL RUN IN SEPARATE CONDUITS.
F4	TIE THE NEW DOOR HOLDERS AND EXISTING DOOR HOLDERS TO A 20 AMP, 1-POLE CIRCUIT BREAKER IN PANEL EP-6 THROUGH FIRE ALARM CONTROL PANEL FOR AUTOMATIC RELEASE. PROVIDE CONDUIT AND CONDUCTORS FOR A COMPLETE INSTALLATION.
V1	EXISTING DATA OUTLETS WILL BE UTILIZED BY OTHERS TO RUN NEW DATA CABLES AND INSTALL NEW JACKS. PROVIDE BLANK COVER PLATE FOR ALL EMPTY J-BOXES WHICH SHOW A NUMBER "0" NEXT TO THE THEM.
V2	NEW LOCATION OF DATA OUTLET. THIS WORK WILL BE DONE BY OTHERS. IT IS SHOWN ONLY FOR INFORMATION.
V3	FURNISH AND INSTALL A 4"X4"X2-1/8" DEEP J-BOX ON THE CEILING TILE FOR A WIRELESS ANTENNA. SUPPORT THE J-BOX FROM THE CEILING DECK.

SPECIAL NOTES:

1. COLOR OF ALL FIRE ALARM DEVICES TO BE WHITE.

SANDERS ASSOCIATES ARCHITECTS
2668 Grant Avenue
Ogden, UT 84401
P : 801.621.7303
www.sandersarch.com

Seal

Consultant

E.C.E. LLC
Electrical Consulting Engineers
939 So. West Temple
Salt Lake City, Utah 84101
Telephone (801) 521-8007
Email: Admin@eceonline.com

Project Name

WSU- MILLER ADMINISTRATION

MEP Upgrades and Remodel

3848 HARRISON BLVD.
OGDEN, UTAH 84401

Issued

No.	Date	Description
1	01.16.15	DFCM PLAN REVIEW
1	02.03.15	BID DOCUMENTS

Revision

No.	Date	Description

DFCM Project No. 14031810
ECE Project No. 4703

Drawing Title

LEVEL 3 FLOOR PLAN - SYSTEMS

Sheet Number

EE303

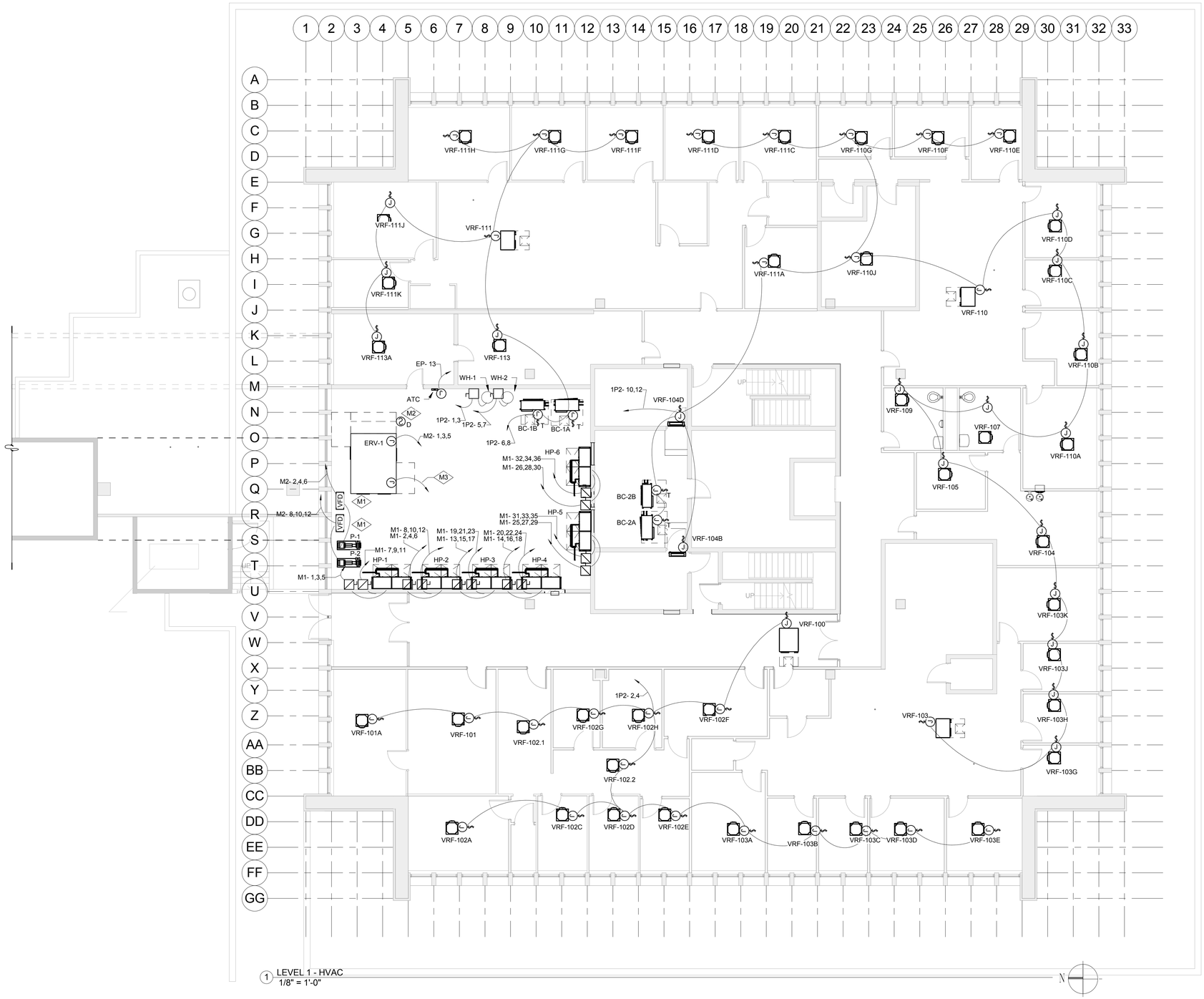

1 LEVEL 1 - HVAC
1/8" = 1'-0"

REFERENCE NOTES:

M1 FURNISH AND INSTALL VFD IN APPROXIMATE LOCATION SHOWN. COORDINATE WITH MECHANICAL CONTRACTOR FOR EXACT LOCATION.

M2 FURNISH AND INSTALL A DUCT DETECTOR WITH SAMPLING TUBE IN THE RETURN AIRDUCT. TIE THE DUCT DETECTOR TO FIRE ALARM CONTROL PANEL IN CLASS "A" LOOP. IN AND OUT CABLES TO DEVICES MUST RUN IN A SEPARATE CONDUIT.

M3 TIE THE ERV UNIT TO FIRE ALARM CONTROL PANEL FOR AUTOMATIC FAN SHUTDOWN.

SPECIAL NOTE:

1. COORDINATE WITH MECHANICAL CONTRACTOR FOR EXACT LOCATION OF MECHANICAL EQUIPMENT AND THEIR CONNECTION POINTS.

ALTERNATE #2:

1. PUMPS (P-1 & P-2) ARE BEING INSTALLED UNDER ALTERNATE #2. ALL ASSOCIATED WIRING, CONDUIT, AND VARIABLE FREQUENCY CONTROLLER SHALL BE UNDER THIS ALTERNATIVE. COORDINATE WITH GENERAL CONTRACTOR.

SANDERS ASSOCIATES ARCHITECTS
2668 Grant Avenue
Ogden, UT 84401
P : 801.621.7303
www.sandersarch.com

Seal

Consultant

E.C.E. LLC
Electrical Consulting Engineers
939 So. West Temple
Salt Lake City, Utah 84101
Telephone (801) 521-8007
Email: Admin@eceonline.com

Project Name

WSU- MILLER ADMINISTRATION

MEP Upgrades and Remodel

3848 HARRISON BLVD.
OGDEN, UTAH 84401

Issued

No.	Date	Description
1	01.16.15	DFCM PLAN REVIEW
1	02.03.15	BID DOCUMENTS

Revision

No.	Date	Description

DFCM Project No. 14031810

ECE Project No. 4703

Drawing Title

LEVEL 1 FLOOR PLAN
HVAC - ELECTRICAL

Sheet Number

EM101

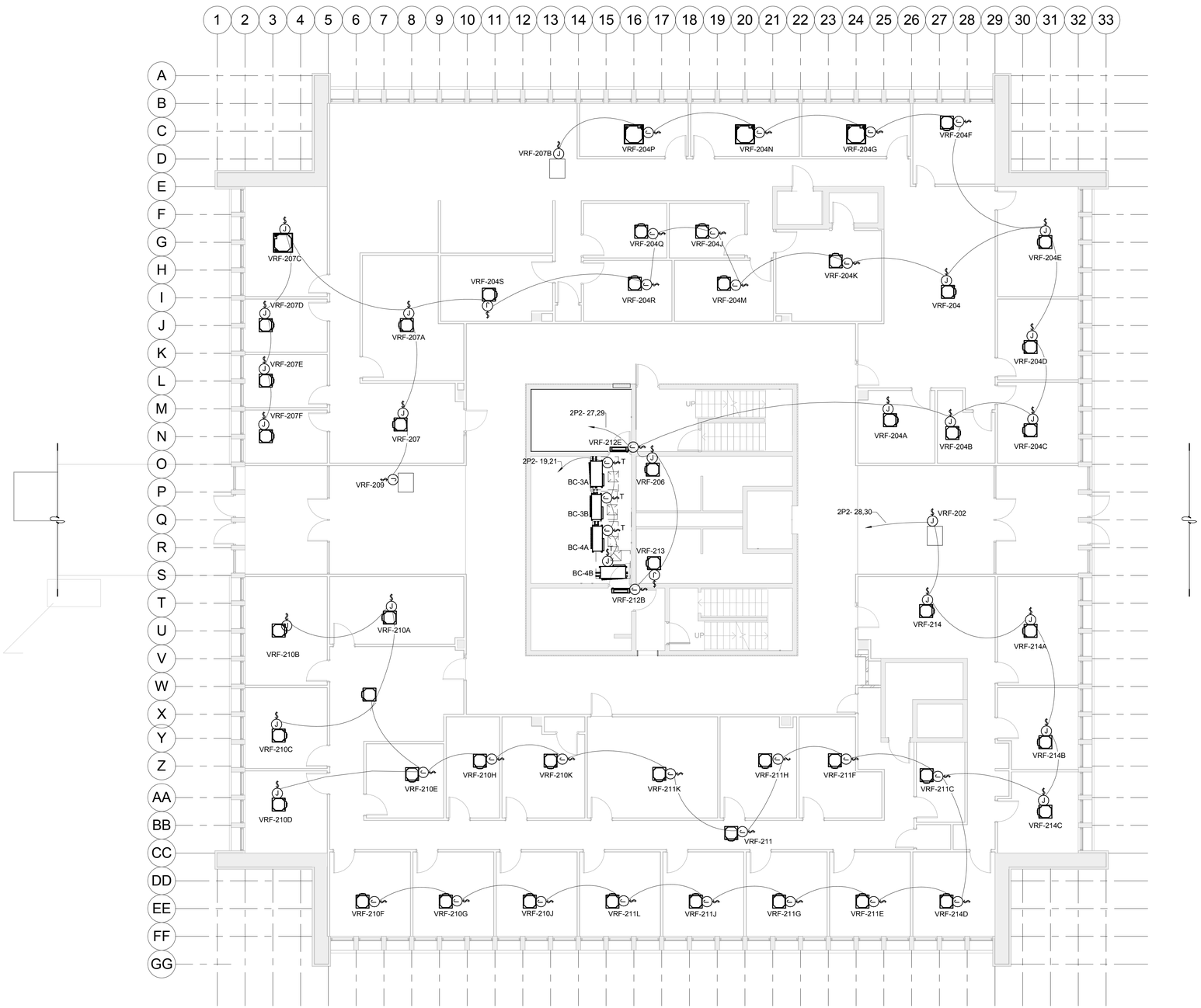

1 LEVEL 2 - HVAC
1/8" = 1'-0"

REFERENCE NOTES:

SPECIAL NOTE:

1. COORDINATE WITH MECHANICAL CONTRACTOR FOR EXACT LOCATION OF MECHANICAL EQUIPMENT AND THEIR CONNECTION POINTS.

SANDERS ASSOCIATES ARCHITECTS
2668 Grant Avenue
Ogden, UT 84401
P : 801.621.7303
www.sandersarch.com

Seal

Consultant

E.C.E. LLC
Electrical Consulting Engineers
939 So. West Temple
Salt Lake City, Utah 84101
Telephone (801) 521-8007
Email: Admin@eceonline.com

Project Name

WSU- MILLER ADMINISTRATION

MEP Upgrades and Remodel

3848 HARRISON BLVD.
OGDEN, UTAH 84401

Issued

No.	Date	Description
1	01.16.15	DFCM PLAN REVIEW
1	02.03.15	BID DOCUMENTS

Revision

No.	Date	Description

DFCM Project No. 14031810

ECE Project No. 4703

Drawing Title

LEVEL 2 FLOOR PLAN
HVAC - ELECTRICAL

Sheet Number

EM102

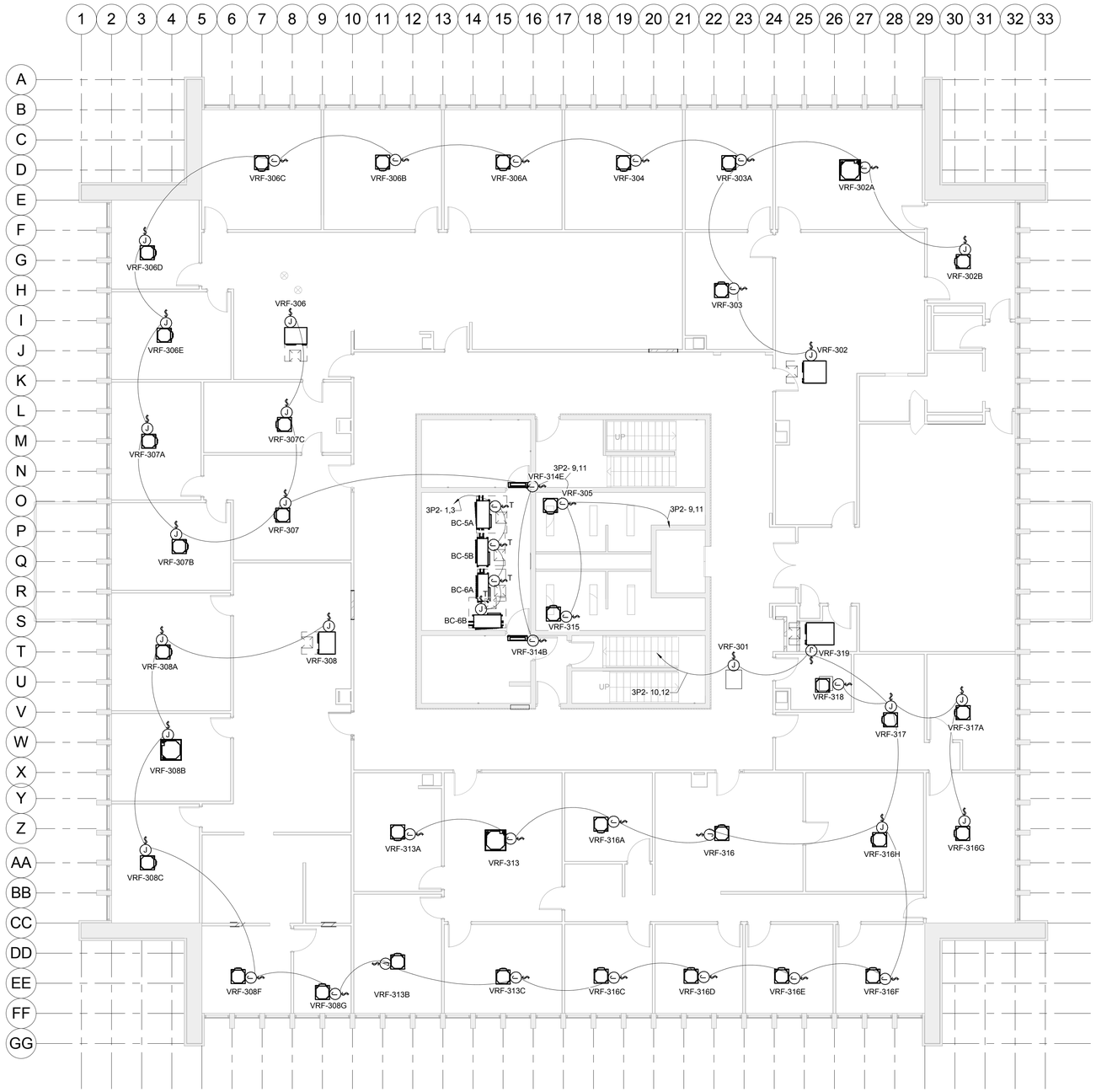

1 LEVEL 3 - HVAC
1/8" = 1'-0"

N

REFERENCE NOTES:

SPECIAL NOTE:

1. COORDINATE WITH MECHANICAL CONTRACTOR FOR EXACT LOCATION OF MECHANICAL EQUIPMENT AND THEIR CONNECTION POINTS.

SANDERS ASSOCIATES ARCHITECTS
2668 Grant Avenue
Ogden, UT 84401
P : 801.621.7303
www.sandersarch.com

Seal

Consultant

E.C.E. LLC
Electrical Consulting Engineers
939 So. West Temple
Salt Lake City, Utah 84101
Telephone (801) 521-8007
Email: Admin@eceonline.com

Project Name

WSU- MILLER ADMINISTRATION

MEP Upgrades and Remodel

3848 HARRISON BLVD.
OGDEN, UTAH 84401

Issued

No.	Date	Description
1	01.16.15	DFCM PLAN REVIEW
1	02.03.15	BID DOCUMENTS

Revision

No.	Date	Description

DFCM Project No. 14031810
ECE Project No. 4703

Drawing Title

LEVEL 3 FLOOR PLAN
HVAC - ELECTRICAL

Sheet Number

EM103

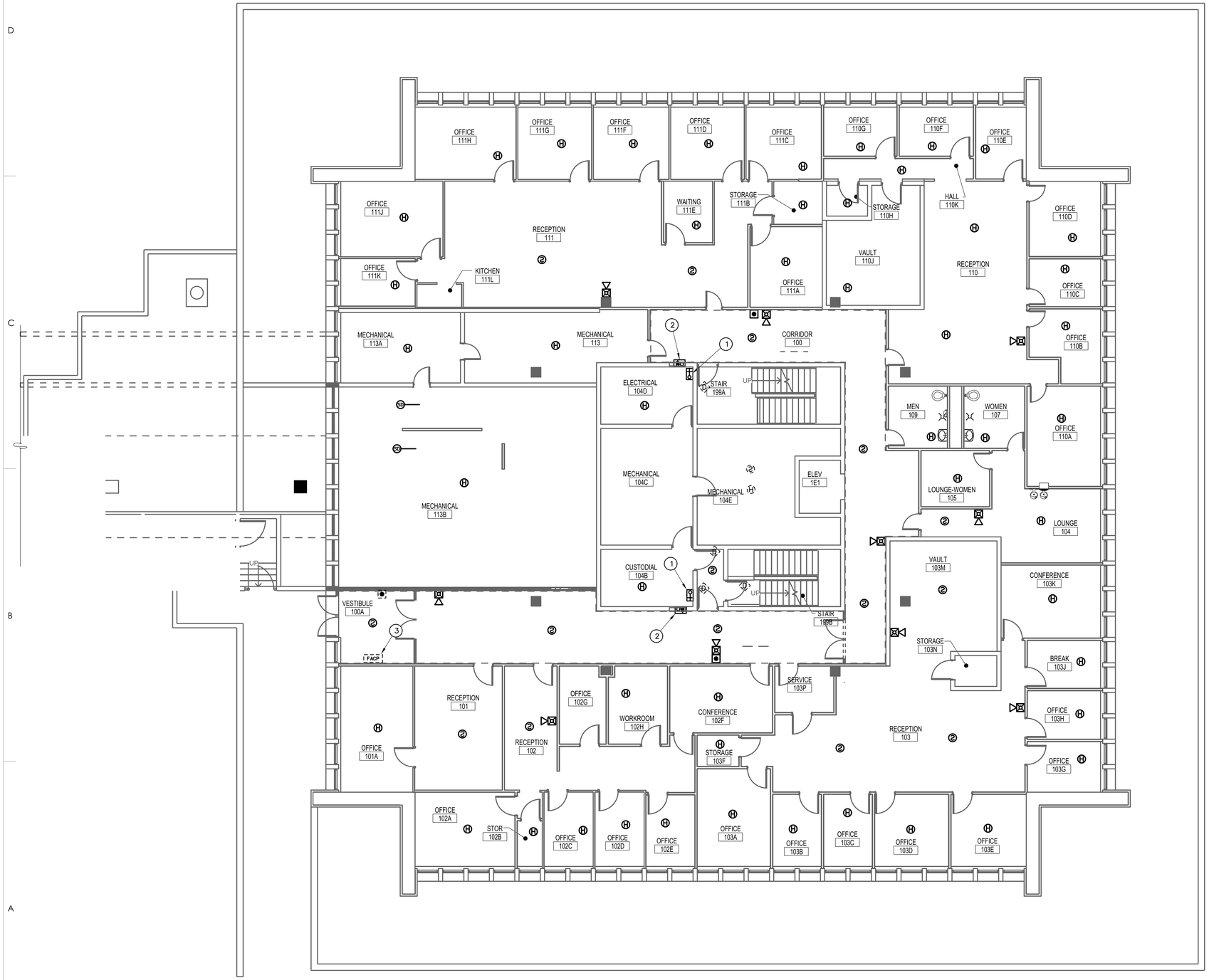

1 FIRE PROTECTION DEMO - 1ST FLOOR
1/8" = 1'-0"

NORTH

FIRE PROTECTION DEMO KEY NOTES

RE: SHEETS FD100, FD101 & FD102

01 EXISTING FIRE PROTECTION STANDPIPE WITH 2-1/2" HOSE VALVE INSTALLED IN RECESSED CABINET ON FLOOR LEVEL LANDING OF EACH EXIT STAIR TO BE DEMOLISHED. REMOVE HOSE VALVE, PIPING, PIPING SUPPORTS AND BRACES. REMOVE PIPING BACK TO POINT OF CONNECTION TO DOMESTIC WATER SYSTEM IN BUILDING AND CAP. EXISTING RECESSED CABINET IN STAIR MAY REMAIN BUT REMOVE ALL SIGNAGE INDICATING PRESENCE OF HOSE VALVE.

02 EXISTING 1-1/2" HOSE VALVE INSTALLED IN RECESSED CABINET TO BE DEMOLISHED. REMOVE HOSE VALVE, PIPING, PIPING SUPPORTS AND BRACES. REMOVE PIPING BACK TO POINT OF CONNECTION TO DOMESTIC WATER SYSTEM IN BUILDING AND CAP. EXISTING RECESSED CABINET SHALL BE REMOVED AND REPLACED WITH NEW RECESSED CABINET SIZED TO FIT EXISTING FIRE EXTINGUISHER, PATCH REMAINING WALL SURFACE TO MATCH SURROUNDINGS.

03 EXISTING CONTROL PANEL FOR FIRE ALARM SYSTEM TO REMAIN. FIRE ALARM SYSTEM TO BE MODIFIED AS REQUIRED TO FACILITATE BUILDING REMODEL. DEMOLISH ALL EXISTING FIRE ALARM INITIATING DEVICES (SMOKE/HEAT DETECTORS, PULL STATIONS, ETC.) AND NOTIFICATION APPLIANCES THROUGHOUT BUILDING UNLESS OTHERWISE NOTED. REMOVE EXISTING CIRCUITS (INCLUDING CONDUIT, WIRING AND JUNCTION BOXES) FOR ALL FIRE ALARM COMPONENTS DEMOLISHED.

FIRE PROTECTION DEMO LEGEND

DEVICE	DESCRIPTION
	NOTIFIER FIRE ALARM CONTROL PANEL TO REMAIN
	SMOKE DETECTOR TO REMAIN. PROTECT IN PLACE DURING BUILDING REMODEL
②	SMOKE DETECTOR TO BE DEMOLISHED. REMOVE DEVICE, BASE, WIRING, CONDUIT AND J–BOXES. DETECTORS ARE NO LONGER REQUIRED THROUGHOUT BUILDING DUE TO INSTALLATION OF FIRE SPRINKLER SYSTEM.
	HEAT DETECTOR TO REMAIN. PROTECT IN PLACE DURING BUILDING REMODEL
Ⓗ	HEAT DETECTOR TO BE DEMOLISHED. REMOVE DEVICE, BASE, WIRING, CONDUIT AND J–BOXES. DETECTORS ARE NO LONGER REQUIRED THROUGHOUT BUILDING DUE TO INSTALLATION OF FIRE SPRINKLER SYSTEM.
	MANUAL FIRE ALARM PULL STATION TO REMAIN. PROTECT IN PLACE DURING BUILDING REMODEL
	MANUAL FIRE ALARM PULL STATION TO BE DEMOLISHED. REMOVE DEVICE, BASE, WIRING, CONDUIT AND J–BOXES.
SD	DUCT MOUNTED SMOKE DETECTOR TO BE DEMOLISHED TO FACILITATE MECHANICAL SYSTEMS REPLACEMENT/UPGRADE. REMOVE DEVICE, HOUSING, SAMPLING TUBES, WIRING, CONDUIT AND J–BOXES.
	MAGNETIC DOOR HOLD–OPEN DEVICE TO REMAIN. PROTECT IN PLACE DURING BUILDING REMODEL
	FIRE ALARM NOTIFICATION APPLICANCE (WALL MOUNT HORN/STROBE) TO REMAIN. PROTECT IN PLACE DURING BUILDING REMODEL
	FIRE ALARM NOTIFICATION APPLIANCE (WALL MOUNT HORN/STROBE) TO BE DEMOLISHED. REMOVE DEVICE AND WIRING. INSTALL COVER PLATE (COLOR TO MATCH WALL) ON REMAINING J–BOX.
	FIRE ALARM NOTIFICATION APPLICANCE (STROBE) TO REMAIN. PROTECT IN PLACE DURING BUILDING REMODEL
	FIRE ALARM NOTIFICATION APPLIANCE (STROBE) TO BE DEMOLISHED. REMOVE DEVICE AND WIRING. INSTALL COVER PLATE (COLOR TO MATCH WALL) ON REMAINING J–BOX.

SANDERS ASSOCIATES ARCHITECTS
2668 Grant Avenue
Ogden, UT 84401
Phone: 801.621.7303
www.sandersarch.com

Seal

LICENSED PROFESSIONAL ENGINEER
No. 191330
GREGORY J. JONES
STATE OF UTAH

02/03/15

Consultant

PROTECTION CONSULTANTS, INC.
Fire Protection Engineers
-Since 1983-
1199 South Main Street, Suite #101
Centerville, UT 84014
Phone: 801-295-6070
Fax: 801-677-0000

Project Name

WSU- MILLER ADMINISTRATION
MEP Upgrades and Remodel
3848 HARRISON BLVD.
OGDEN, UTAH 84401

Issued

No.	Date	Description
1	01/16/15	DFCM PLAN REVIEW
2	02/03/15	BID DOCUMENTS

Revision #

No.	Date	Description

DFCM Project No.	14031810
SAA Project No.	214016
Drawn By	BAJ
Checked By	GTJ

Drawing Title

FIRE PROTECTION DEMO - 1ST FLOOR

Sheet Number

FD100

DFCM approval

FIRE PROTECTION DEMO KEY NOTES

RE: SHEETS FD100, FD101 & FD102

01 EXISTING FIRE PROTECTION STANDPIPE WITH 2-1/2" HOSE VALVE INSTALLED IN RECESSED CABINET ON FLOOR LEVEL LANDING OF EACH EXIT STAIR TO BE DEMOLISHED. REMOVE HOSE VALVE, PIPING, PIPING SUPPORTS AND BRACES. REMOVE PIPING BACK TO POINT OF CONNECTION TO DOMESTIC WATER SYSTEM IN BUILDING AND CAP. EXISTING RECESSED CABINET IN STAIR MAY REMAIN BUT REMOVE ALL SIGNAGE INDICATING PRESENCE OF HOSE VALVE.

02 EXISTING 1-1/2" HOSE VALVE INSTALLED IN RECESSED CABINET TO BE DEMOLISHED. REMOVE HOSE VALVE, PIPING, PIPING SUPPORTS AND BRACES. REMOVE PIPING BACK TO POINT OF CONNECTION TO DOMESTIC WATER SYSTEM IN BUILDING AND CAP. EXISTING RECESSED CABINET SHALL BE REMOVED AND REPLACED WITH NEW RECESSED CABINET SIZED TO FIT EXISTING FIRE EXTINGUISHER, PATCH REMAINING WALL SURFACE TO MATCH SURROUNDINGS.

03 EXISTING CONTROL PANEL FOR FIRE ALARM SYSTEM TO REMAIN. FIRE ALARM SYSTEM TO BE MODIFIED AS REQUIRED TO FACILITATE BUILDING REMODEL. DEMOLISH ALL EXISTING FIRE ALARM INITIATING DEVICES (SMOKE/HEAT DETECTORS, PULL STATIONS, ETC.) AND NOTIFICATION APPLIANCES THROUGHOUT BUILDING UNLESS OTHERWISE NOTED. REMOVE EXISTING CIRCUITS (INCLUDING CONDUIT, WIRING AND JUNCTION BOXES) FOR ALL FIRE ALARM COMPONENTS DEMOLISHED.

FIRE PROTECTION DEMO LEGEND

DEVICE	DESCRIPTION
FACP	NOTIFIER FIRE ALARM CONTROL PANEL TO REMAIN
	SMOKE DETECTOR TO REMAIN. PROTECT IN PLACE DURING BUILDING REMODEL
	SMOKE DETECTOR TO BE DEMOLISHED. REMOVE DEVICE, BASE, WIRING, CONDUIT AND J-BOXES. DETECTORS ARE NO LONGER REQUIRED THROUGHOUT BUILDING DUE TO INSTALLATION OF FIRE SPRINKLER SYSTEM.
	HEAT DETECTOR TO REMAIN. PROTECT IN PLACE DURING BUILDING REMODEL
	HEAT DETECTOR TO BE DEMOLISHED. REMOVE DEVICE, BASE, WIRING, CONDUIT AND J-BOXES. DETECTORS ARE NO LONGER REQUIRED THROUGHOUT BUILDING DUE TO INSTALLATION OF FIRE SPRINKLER SYSTEM.
	MANUAL FIRE ALARM PULL STATION TO REMAIN. PROTECT IN PLACE DURING BUILDING REMODEL
	MANUAL FIRE ALARM PULL STATION TO BE DEMOLISHED. REMOVE DEVICE, BASE, WIRING, CONDUIT AND J-BOXES.
SD	DUCT MOUNTED SMOKE DETECTOR TO BE DEMOLISHED TO FACILITATE MECHANICAL SYSTEMS REPLACEMENT/UPGRADE. REMOVE DEVICE, HOUSING, SAMPLING TUBES, WIRING, CONDUIT AND J-BOXES.
D	MAGNETIC DOOR HOLD-OPEN DEVICE TO REMAIN. PROTECT IN PLACE DURING BUILDING REMODEL
	FIRE ALARM NOTIFICATION APPLICANCE (WALL MOUNT HORN/STROBE) TO REMAIN. PROTECT IN PLACE DURING BUILDING REMODEL
	FIRE ALARM NOTIFICATION APPLIANCE (WALL MOUNT HORN/STROBE) TO BE DEMOLISHED. REMOVE DEVICE AND WIRING. INSTALL COVER PLATE (COLOR TO MATCH WALL) ON REMAINING J-BOX.
	FIRE ALARM NOTIFICATION APPLICANCE (STROBE) TO REMAIN. PROTECT IN PLACE DURING BUILDING REMODEL
	FIRE ALARM NOTIFICATION APPLIANCE (STROBE) TO BE DEMOLISHED. REMOVE DEVICE AND WIRING. INSTALL COVER PLATE (COLOR TO MATCH WALL) ON REMAINING J-BOX.

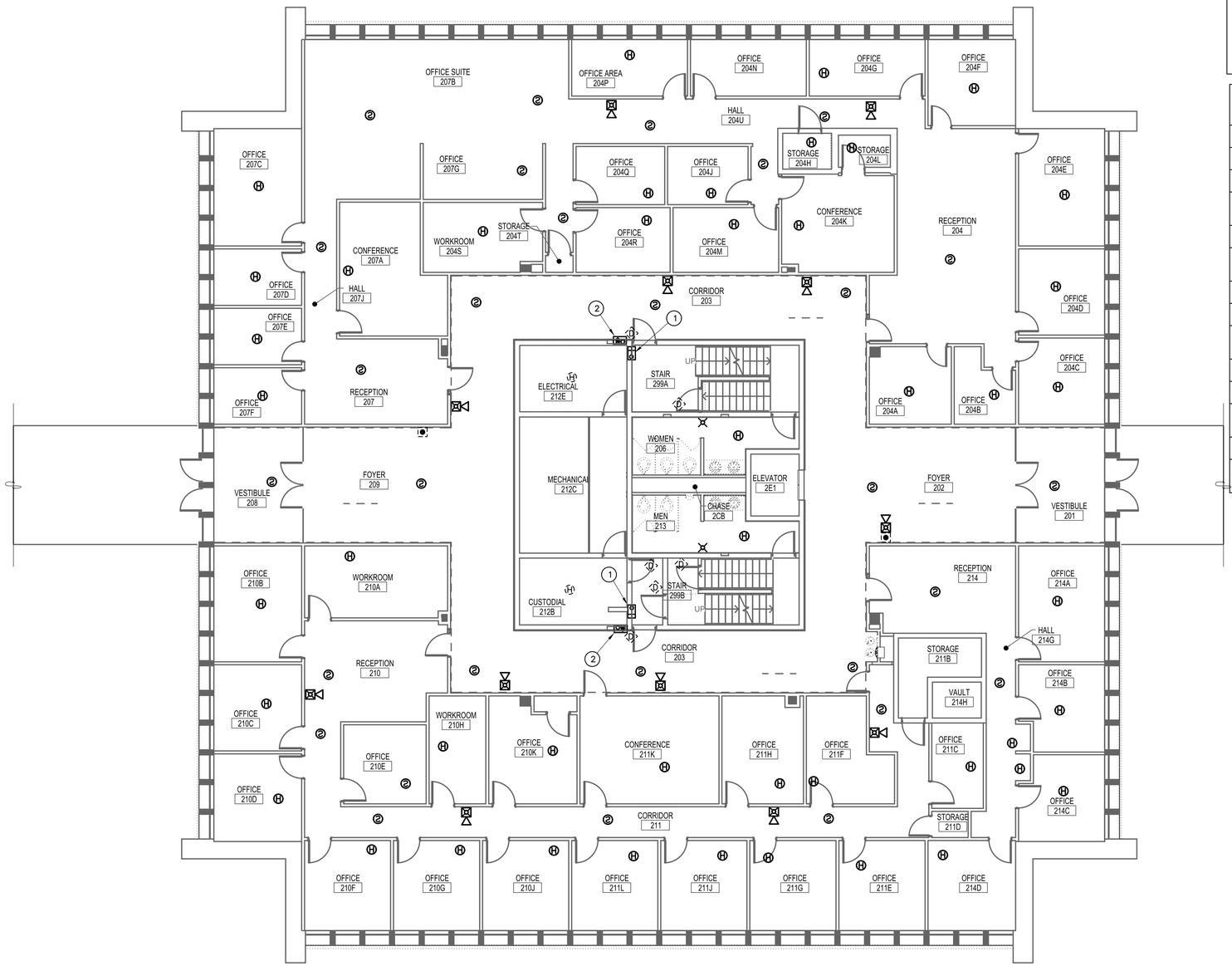

1 FIRE PROTECTION DEMO - 2ND FLOOR

1/8" = 1'-0"

NORTH

DFCM approval

SANDERS ASSOCIATES ARCHITECTS

2668 Grant Avenue
Ogden, UT 84401
Phone: 801.621.7303
www.sandersarch.com

Seal

LICENSED PROFESSIONAL ENGINEER No. 191330 GREGORY J. JONES STATE OF UTAH

02/03/15

Consultant

PROTECTION CONSULTANTS, INC.

Fire Protection Engineers
-Since 1983-

1199 South Main Street, Suite #101
Centerville, UT 84014

Phone: 801-295-6070
Fax: 801-677-0000

Project Name

WSU- MILLER ADMINISTRATION

MEP Upgrades and Remodel

3848 HARRISON BLVD.
OGDEN, UTAH 84401

Issued

No.	Date	Description
1	01/16/15	DFCM PLAN REVIEW
2	02/03/15	BID DOCUMENTS

Revision

No.	Date	Description

DFCM Project No.	14031810
SAA Project No.	214016
Drawn By	BAJ
Checked By	GTJ

Drawing Title

FIRE PROTECTION DEMO - 2ND FLOOR

Sheet Number

FD101

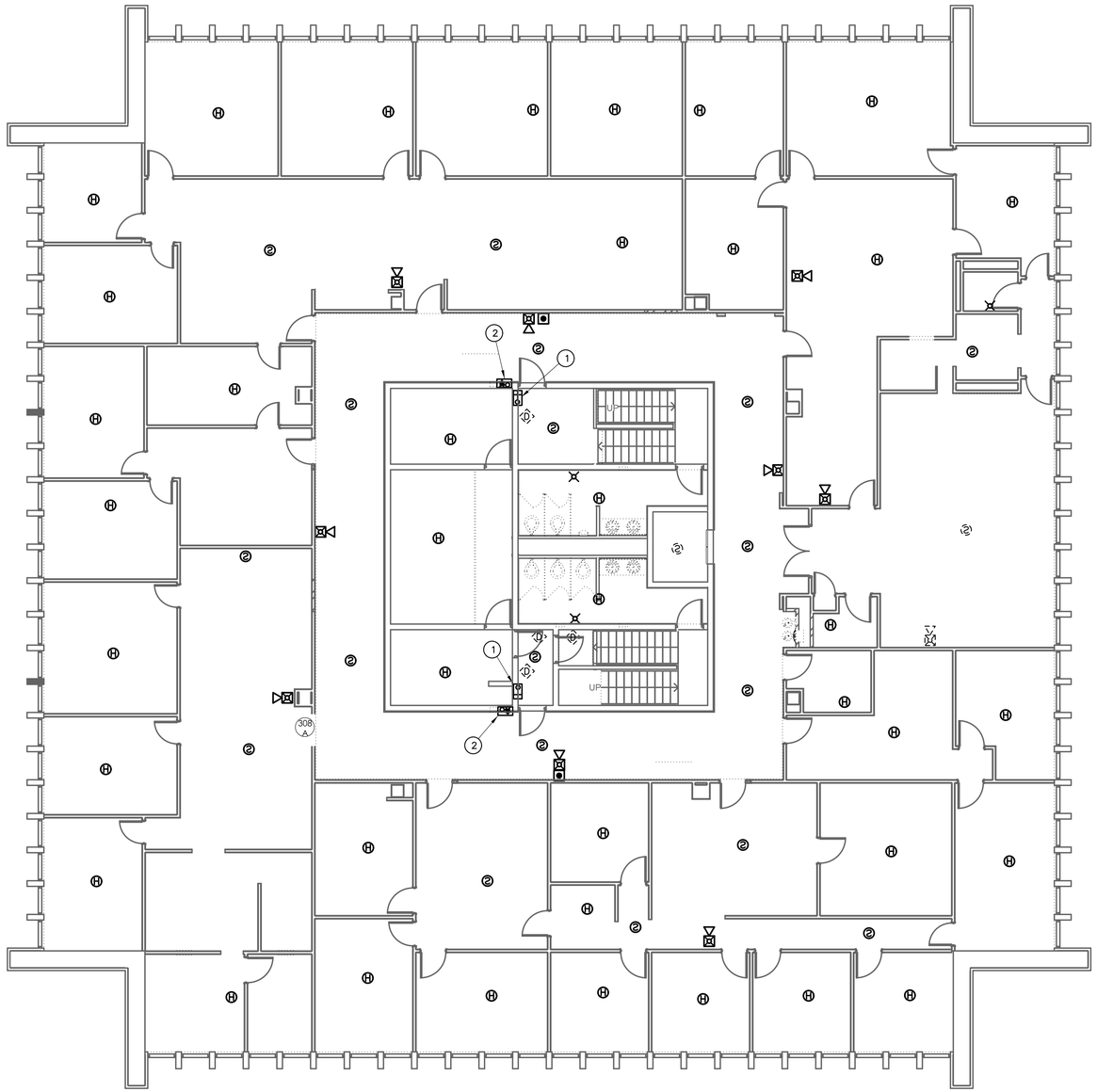

1 FIRE PROTECTION DEMO - 3RD FLOOR
1/8" = 1'-0"

NORTH

FIRE PROTECTION DEMO KEY NOTES

RE: SHEETS FD100, FD101 & FD102

01 EXISTING FIRE PROTECTION STANDPIPE WITH 2-1/2" HOSE VALVE INSTALLED IN RECESSED CABINET ON FLOOR LEVEL LANDING OF EACH EXIT STAIR TO BE DEMOLISHED. REMOVE HOSE VALVE, PIPING, PIPING SUPPORTS AND BRACES. REMOVE PIPING BACK TO POINT OF CONNECTION TO DOMESTIC WATER SYSTEM IN BUILDING AND CAP. EXISTING RECESSED CABINET IN STAIR MAY REMAIN BUT REMOVE ALL SIGNAGE INDICATING PRESENCE OF HOSE VALVE.

02 EXISTING 1-1/2" HOSE VALVE INSTALLED IN RECESSED CABINET TO BE DEMOLISHED. REMOVE HOSE VALVE, PIPING, PIPING SUPPORTS AND BRACES. REMOVE PIPING BACK TO POINT OF CONNECTION TO DOMESTIC WATER SYSTEM IN BUILDING AND CAP. EXISTING RECESSED CABINET SHALL BE REMOVED AND REPLACED WITH NEW RECESSED CABINET SIZED TO FIT EXISTING FIRE EXTINGUISHER, PATCH REMAINING WALL SURFACE TO MATCH SURROUNDINGS.

03 EXISTING CONTROL PANEL FOR FIRE ALARM SYSTEM TO REMAIN. FIRE ALARM SYSTEM TO BE MODIFIED AS REQUIRED TO FACILITATE BUILDING REMODEL. DEMOLISH ALL EXISTING FIRE ALARM INITIATING DEVICES (SMOKE/HEAT DETECTORS, PULL STATIONS, ETC.) AND NOTIFICATION APPLIANCES THROUGHOUT BUILDING UNLESS OTHERWISE NOTED. REMOVE EXISTING CIRCUITS (INCLUDING CONDUIT, WIRING AND JUNCTION BOXES) FOR ALL FIRE ALARM COMPONENTS DEMOLISHED.

FIRE PROTECTION DEMO LEGEND

DEVICE	DESCRIPTION
FACP	NOTIFIER FIRE ALARM CONTROL PANEL TO REMAIN
	SMOKE DETECTOR TO REMAIN. PROTECT IN PLACE DURING BUILDING REMODEL
	SMOKE DETECTOR TO BE DEMOLISHED. REMOVE DEVICE, BASE, WIRING, CONDUIT AND J–BOXES. DETECTORS ARE NO LONGER REQUIRED THROUGHOUT BUILDING DUE TO INSTALLATION OF FIRE SPRINKLER SYSTEM.
H	HEAT DETECTOR TO REMAIN. PROTECT IN PLACE DURING BUILDING REMODEL
H	HEAT DETECTOR TO BE DEMOLISHED. REMOVE DEVICE, BASE, WIRING, CONDUIT AND J–BOXES. DETECTORS ARE NO LONGER REQUIRED THROUGHOUT BUILDING DUE TO INSTALLATION OF FIRE SPRINKLER SYSTEM.
	MANUAL FIRE ALARM PULL STATION TO REMAIN. PROTECT IN PLACE DURING BUILDING REMODEL
	MANUAL FIRE ALARM PULL STATION TO BE DEMOLISHED. REMOVE DEVICE, BASE, WIRING, CONDUIT AND J–BOXES.
S	DUCT MOUNTED SMOKE DETECTOR TO BE DEMOLISHED TO FACILITATE MECHANICAL SYSTEMS REPLACEMENT/UPGRADE. REMOVE DEVICE, HOUSING, SAMPLING TUBES, WIRING, CONDUIT AND J–BOXES.
	MAGNETIC DOOR HOLD–OPEN DEVICE TO REMAIN. PROTECT IN PLACE DURING BUILDING REMODEL
	FIRE ALARM NOTIFICATION APPLICANCE (WALL MOUNT HORN/STROBE) TO REMAIN. PROTECT IN PLACE DURING BUILDING REMODEL
	FIRE ALARM NOTIFICATION APPLIANCE (WALL MOUNT HORN/STROBE) TO BE DEMOLISHED. REMOVE DEVICE AND WIRING. INSTALL COVER PLATE (COLOR TO MATCH WALL) ON REMAINING J–BOX.
	FIRE ALARM NOTIFICATION APPLICANCE (STROBE) TO REMAIN. PROTECT IN PLACE DURING BUILDING REMODEL
	FIRE ALARM NOTIFICATION APPLIANCE (STROBE) TO BE DEMOLISHED. REMOVE DEVICE AND WIRING. INSTALL COVER PLATE (COLOR TO MATCH WALL) ON REMAINING J–BOX.

DFCM approval

SANDERS ASSOCIATES ARCHITECTS
2668 Grant Avenue
Ogden, UT 84401
Phone: 801.621.7303
www.sandersarch.com

Seal

LICENSED PROFESSIONAL ENGINEER
No. 191330
GREGORY J. JONES
STATE OF UTAH

02/03/15

Consultant

PROTECTION CONSULTANTS, INC.
Fire Protection Engineers
-Since 1983-
1199 South Main Street, Suite #101
Centerville, UT 84014
Phone: 801-295-6070
Fax: 801-677-0000

Project Name

WSU- MILLER ADMINISTRATION
MEP Upgrades and Remodel
3848 HARRISON BLVD.
OGDEN, UTAH 84401

Issued

No.	Date	Description
1	01/16/15	DFCM PLAN REVIEW
2	02/03/15	BID DOCUMENTS

Revision #

No.	Date	Description

DFCM Project No.	14031810
SAA Project No.	214016
Drawn By	BAJ
Checked By	GTJ

Drawing Title

FIRE PROTECTION
DEMO - 3RD FLOOR

Sheet Number

FD102

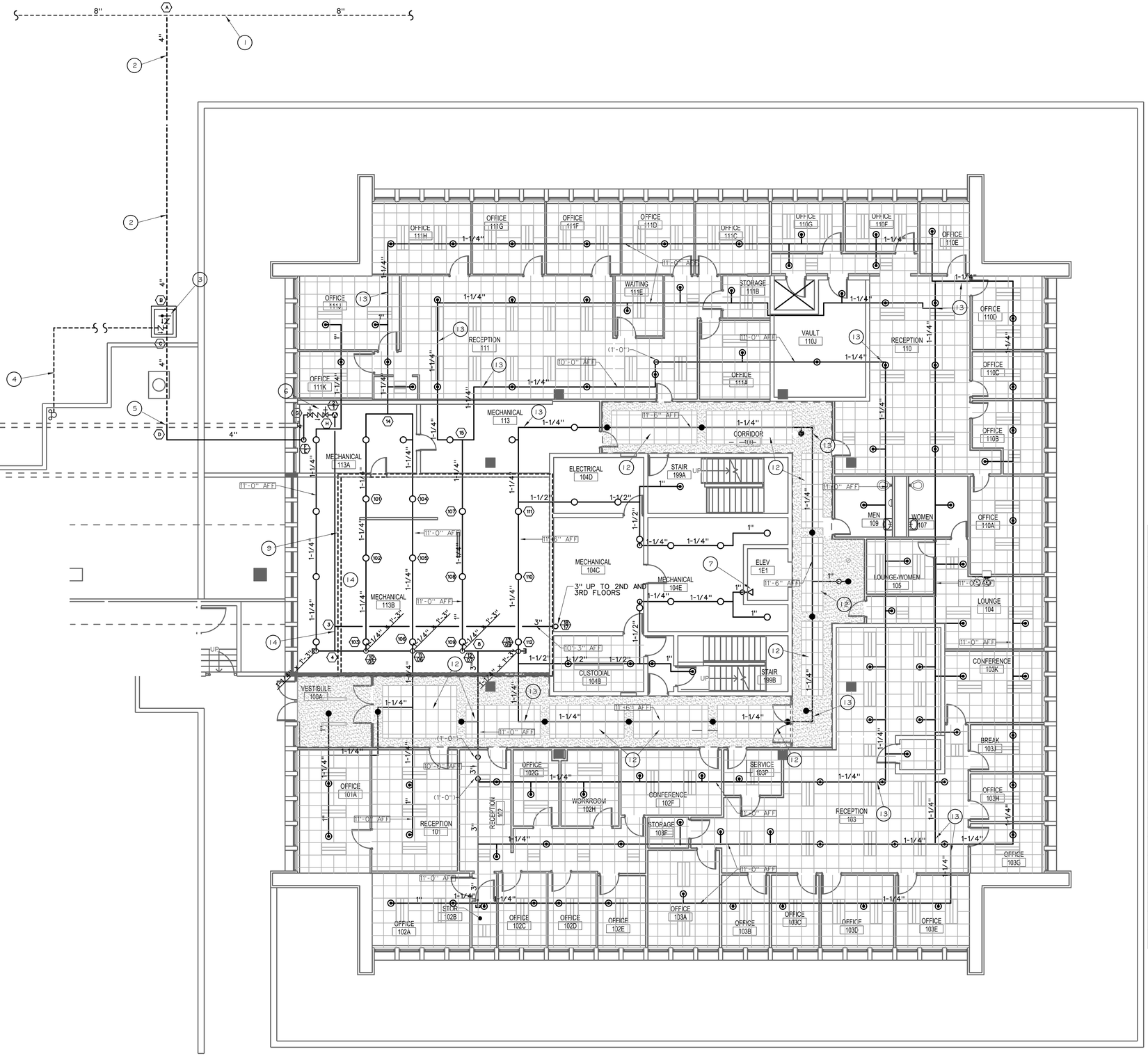

1 FIRE SPRINKLER PLAN - 1ST FLOOR

1/8" = 1'-0"

N

FIRE SPRINKLER KEY NOTES

RE: SHEETS FP100, FP101 & FP102

01. CONNECT TO EXISTING 8" WATER LINE EAST OF BUILDING TO SUPPLY NEW FIRE SPRINKLER SYSTEM IN BUILDING. WATER SUPPLY AVAILABLE FROM EXISTING 8" WATER LINE WAS DETERMINED BY FIRE HYDRANT FLOW TEST CONDUCTED AUGUST 26, 2014 AND WAS MEASURED TO BE:
STATIC PRESSURE: 134 PSI
RESIDUAL PRESSURE: 72 PSI
FLOW: 4,687 PSI

02. INSTALL NEW 4" FIRE PROTECTION WATER SUPPLY (CEMENT LINED DUCTILE IRON) TO BUILDING. CONNECT TO EXISTING 8" WATER LINE EAST OF BUILDING. LOCATE PIPING AS SHOWN ON PLAN AND PROVIDE A MINIMUM 66" DEPTH OF BURY TO PROTECT PIPING AGAINST FREEZING. COORDINATE WITH ALL OTHER BURIED UTILITIES AND MAKE MINOR ADJUSTMENTS TO LOCATION OF WATER SUPPLY AS REQUIRED. OBTAIN ALL REQUIRED APPROVALS/PERMITS FROM UTILITY PROVIDER. INSTALL, RESTRAIN, FLUSH AND PRESSURE TEST PIPING IN ACCORDANCE WITH ALL APPLICABLE REQUIREMENTS OF NFPA 13.

03. INSTALL CONCRETE VAULT IN EXISTING LANDSCAPED AREA FOR FIRE PROTECTION CONTROL/CHECK VALVES. SIZE AND LOCATION OF VAULT TO BE DETERMINED BY INSTALLING CONTRACTOR. SEE DETAIL 1 ON SHEET FP500.

04. 2-WAY, FREE STANDING FIRE DEPARTMENT CONNECTION (FDC). INSTALL IN LANDSCAPE PLANTER ON NORTH SIDE OF BUILDING ADJACENT TO FIRE LANE (SIDEWALK). PROVIDE SIGN TO INDICATE BUILDING SERVED BY FDC. CONNECT TO FIRE PROTECTION WATER SUPPLY IN CONCRETE VAULT. SEE DETAIL 1 ON SHEET FP500.

05. INSTALL 4" SUPPLY TO FIRE SPRINKLER RISER THROUGH EXISTING UTILITY TUNNEL. TRANSITION FROM UNDERGROUND TO ABOVEGROUND PIPING AT TUNNEL WALL. PROVIDE CLEARANCE AROUND PIPING PENETRATION OF WALL PER NFPA 13 AND FILL VOID SPACE WITH WATER-PROOF, FLEXIBLE FILL MATERIAL.

06. FIRE SPRINKLER RISER WITH DOUBLE CHECK ASSEMBLY BACKFLOW PREVENTER. SEE DETAIL 2 ON SHEET FP500.

07. INSTALL FIRE SPRINKLER TO PROTECT BOTTOM OF ELEVATOR SHAFT IN ACCORDANCE WITH NFPA 13 8.15.5.1. NO FIRE SPRINKLER PROTECTION IS REQUIRED AT THE TOP OF THE NON-COMBUSTIBLE ELEVATOR SHAFT IN ACCORDANCE WITH NFPA 13 8.15.5.5.

08. EXISTING ORNAMENTAL WALLS AND CEILING IN CONFERENCE 317 WILL NOT BE REPLACED AS PART OF BUILDING RENOVATION. USE EXTENDED COVERAGE SIDE DISCHARGE SPRINKLERS FIRE SPRINKLERS TO PROTECT ROOM TO MINIMIZE NEW PIPING REQUIRED AND SUBSEQUENT DISRUPTION TO EXISTING CEILING. CARTEFULLY PENETRATE EXISTING ACOUSTICAL PANEL WALL AS REQUIRED FOR INSTALLATION OF SIDEWALL SPRINKLER. PROTECT EXISTING FABRTIC SURFACE TREATMENT TO PREVENT DAMAGE.

09. HYDRAULIC DESIGN AREA #1 - 1ST FLOOR MECHANICAL ROOM: ORDINARY HAZARD GROUP 2 - 0.20 GPM/SQ FT OVER 970 SQ FT (AREA REDUCED PER NFPA 13 11.2.3.2.3) WITH 250 GPM HOSE ALLOWANCE.

10. HYDRAULIC DESIGN AREA #2 - 3RD FLOOR OFFICE SPACES: LIGHT HAZARD - 0.10 GPM/SQ FT OVER 900 SQ FT (AREA REDUCED PER NFPA 13 11.2.3.2.3) WITH 100 GPM HOSE ALLOWANCE.

11. HYDRAULIC DESIGN AREA #3 - 3RD FLOOR CORRIDOR: LIGHT HAZARD - 0.10 GPM/SQ FT OVER HYDRAULICALLY MOST REMOTE 7 SPRINKLERS (NFPA 13 11.2.3.3.7) WITH 100 GPM HOSE ALLOWANCE.

12. NO FIRE SPRINKLERS REQUIRED IN CEILING POCKET IN ACCORDANCE WITH NFPA 13 8.6.7

13. OFFSET BRANCH LINES AS REQURIED BELOW EXISTING DEEPER CONCRETE BEAMS AT BUILDING CORNERS

14. INSTALL REMOVABLE MECHANICAL COUPLING IN ACCORDANCE WITH NFPA 13 8.15.21 AT POINT OF CONNECTION BETWEEN FEED MAIN AND FIRE SPRINKLER SYSTEM ON EACH FLOOR. MECHANICAL COUPLING TO ALLOW FOR TEMPORARY ISOLATION OF FIRE SPRINKLER ON EACH FLOOR THROUGH REMOVAL OF COUPLING AND INSERTION OF CAP.

FIRE SPRINKLER SYMBOL LEGEND

SYMBOL	DESCRIPTION
○	QUICK RESPONSE, STANDARD ORIFICE (K-5.6), ORDINARY TEMPERATURE, BRASS, UPRIGHT FIRE SPRINKLER INSTALLED ON EXPOSED BRANCH LINE
⊙	QUICK RESPONSE, STANDARD ORIFICE (K-5.6), ORDINARY TEMPERATURE, WHITE PAINTED, PENDENT FIRE SPRINKLER INSTALLED ON 1" DROP WITH WHITE RECESSED ESCUTCHEON.
●	QUICK RESPONSE, EXTENDED COVERAGE (K-8.0), ORDINARY TEMPERATURE, CONCEALED TYPE PENDENT FIRE SPRINKLER WITH WHITE COVER PLATE.
◁	QUICK RESPONSE, STANDARD ORIFICE (K-5.6), INTERMEDIATE TEMPERATURE, BRASS, SIDEWALL FIRE SPRINKLER INSTALLED ON EXPOSED BRANCH LINE
◀	QUICK RESPONSE, EXTENDED COVERAGE, ORDINARY TEMPERATURE, CONCEALED TYPE SIDEWALL FIRE SPRINKLER. SPRINKLER IS SUPPLIED BY OWNER.
	FIRE SPRINKLER RISER
	DOUBLE CHECK ASSEMBLY BACKFLOW PREVENTER
	CONTROL VAVLE WITH FREE STANDING POST INDICATOR
	CHECK VALVE
	2-WAY, FREE STANDING FIRE DEPARTMENT CONNECTION
	VERTICAL RISE FROM PIPE
	VERTICAL DROP FROM PIPE
	VERTICAL TRANSITION IN PIPING
	PIPE CAP/FLUSHING CONNECITON
X'-X" AFF	PIPING ELEVATION (CENTERLINE ABOVE FINISHED FLOOR)
X	HYDRAULIC CALCULAITON NODE POINT

DFCM approval

SANDERS ASSOCIATES ARCHITECTS
2668 Grant Avenue
Ogden, UT 84401
Phone: 801.621.7303
www.sandersarch.com

Seal

LICENSED PROFESSIONAL ENGINEER No. 191330 GREGORY T. JONES STATE OF UTAH

02/03/15

Consultant

PROTECTION CONSULTANTS, INC.
Fire Protection Engineers
-Since 1983-
1199 South Main Street, Suite #101 Centerville, UT 84014
Phone: 801-295-6070 Fax: 801-677-0000

Project Name

WSU- MILLER ADMINISTRATION
MEP Upgrades and Remodel
3848 HARRISON BLVD.
OGDEN, UTAH 84401

Issued

No.	Date	Description
1	01/16/15	DFCM PLAN REVIEW
2	02/03/15	BID DOCUMENTS

Revision #

No.	Date	Description

DFCM Project No.	14031810
SAA Project No.	214016
Drawn By	BAJ
Checked By	GTJ

Drawing Title

FIRE SPRINKLER PLAN - 1ST FLOOR

Sheet Number

FP100

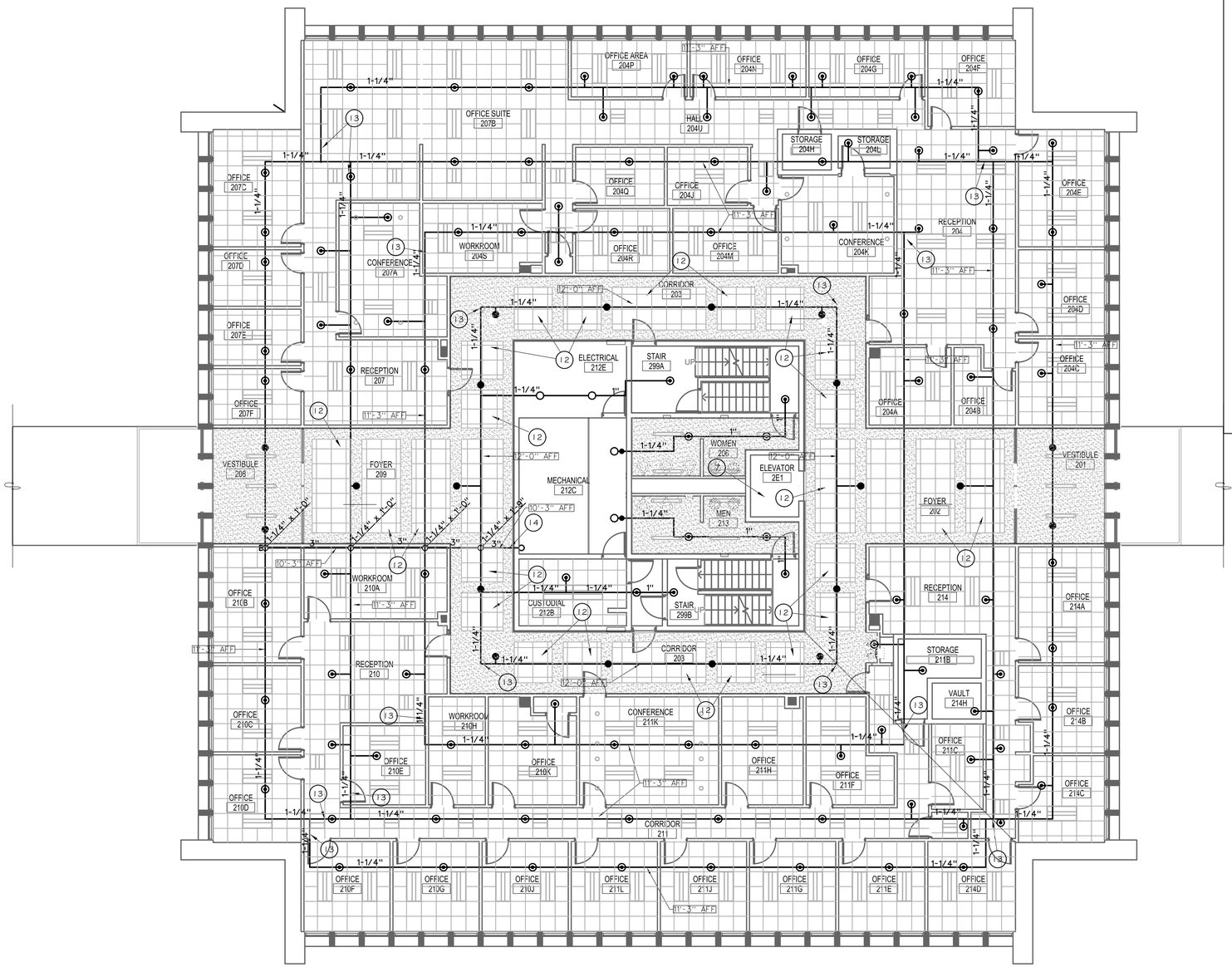

1 FIRE SPRINKLER PLAN - 2ND FLOOR

1/8" = 1'-0"

N

FIRE SPRINKLER KEY NOTES

RE: SHEETS FP100, FP101 & FP102

01. CONNECT TO EXISTING 8" WATER LINE EAST OF BUILDING TO SUPPLY NEW FIRE SPRINKLER SYSTEM IN BUILDING. WATER SUPPLY AVAILABLE FROM EXISTING 8" WATER LINE WAS DETERMINED BY FIRE HYDRANT FLOW TEST CONDUCTED AUGUST 26, 2014 AND WAS MEASURED TO BE:
STATIC PRESSURE: 134 PSI
RESIDUAL PRESSURE: 72 PSI
FLOW: 4,687 PSI

02. INSTALL NEW 4" FIRE PROTECTION WATER SUPPLY (CEMENT LINED DUCTILE IRON) TO BUILDING. CONNECT TO EXISTING 8" WATER LINE EAST OF BUILDING. LOCATE PIPING AS SHOWN ON PLAN AND PROVIDE A MINIMUM 66" DEPTH OF BURY TO PROTECT PIPING AGAINST FREEZING. COORDINATE WITH ALL OTHER BURIED UTILITIES AND MAKE MINOR ADJUSTMENTS TO LOCATION OF WATER SUPPLY AS REQUIRED. OBTAIN ALL REQUIRED APPROVALS/PERMITS FROM UTILITY PROVIDER. INSTALL, RESTRAIN, FLUSH AND PRESSURE TEST PIPING IN ACCORDANCE WITH ALL APPLICABLE REQUIREMENTS OF NFPA 13.

03. INSTALL CONCRETE VAULT IN EXISTING LANDSCAPED AREA FOR FIRE PROTECTION CONTROL/CHECK VALVES. SIZE AND LOCATION OF VAULT TO BE DETERMINED BY INSTALLING CONTRACTOR. SEE DETAIL 1 ON SHEET FP500.

04. 2-WAY, FREE STANDING FIRE DEPARTMENT CONNECTION (FDC). INSTALL IN LANDSCAPE PLANTER ON NORTH SIDE OF BUILDING ADJACENT TO FIRE LANE (SIDEWALK). PROVIDE SIGN TO INDICATE BUILDING SERVED BY FDC. CONNECT TO FIRE PROTECTION WATER SUPPLY IN CONCRETE VAULT. SEE DETAIL 1 ON SHEET FP500.

05. INSTALL 4" SUPPLY TO FIRE SPRINKLER RISER THROUGH EXISTING UTILITY TUNNEL. TRANSITION FROM UNDERGROUND TO ABOVEGROUND PIPING AT TUNNEL WALL. PROVIDE CLEARANCE AROUND PIPING PENETRATION OF WALL PER NFPA 13 AND FILL VOID SPACE WITH WATER-PROOF, FLEXIBLE FILL MATERIAL.

06. FIRE SPRINKLER RISER WITH DOUBLE CHECK ASSEMBLY BACKFLOW PREVENTER. SEE DETAIL 2 ON SHEET FP500.

07. INSTALL FIRE SPRINKLER TO PROTECT BOTTOM OF ELEVATOR SHAFT IN ACCORDANCE WITH NFPA 13 8.15.5.1. NO FIRE SPRINKLER PROTECTION IS REQUIRED AT THE TOP OF THE NON-COMBUSTIBLE ELEVATOR SHAFT IN ACCORDANCE WITH NFPA 13 8.15.5.5.

08. EXISTING ORNAMENTAL WALLS AND CEILING IN CONFERENCE 317 WILL NOT BE REPLACED AS PART OF BUILDING RENOVATION. USE EXTENDED COVERAGE SIDE DISCHARGE SPRINKLERS FIRE SPRINKLERS TO PROTECT ROOM TO MINIMIZE NEW PIPING REQUIRED AND SUBSEQUENT DISRUPTION TO EXISTING CEILING. CARTEFULLY PENETRATE EXISTING ACOUSTICAL PANEL WALL AS REQUIRED FOR INSTALLATION OF SIDEWALL SPRINKLER. PROTECT EXISTING FABRTIC SURFACE TREATMENT TO PREVENT DAMAGE.

09. HYDRAULIC DESIGN AREA #1 - 1ST FLOOR MECHANICAL ROOM: ORDINARY HAZARD GROUP 2 - 0.20 GPM/SQ FT OVER 970 SQ FT (AREA REDUCED PER NFPA 13 11.2.3.2.3) WITH 250 GPM HOSE ALLOWANCE.

10. HYDRAULIC DESIGN AREA #2 - 3RD FLOOR OFFICE SPACES: LIGHT HAZARD - 0.10 GPM/SQ FT OVER 900 SQ FT (AREA REDUCED PER NFPA 13 11.2.3.2.3) WITH 100 GPM HOSE ALLOWANCE.

11. HYDRAULIC DESIGN AREA #3 - 3RD FLOOR CORRIDOR: LIGHT HAZARD - 0.10 GPM/SQ FT OVER HYDRAULICALLY MOST REMOTE 7 SPRINKLERS (NFPA 13 11.2.3.3.7) WITH 100 GPM HOSE ALLOWANCE.

12. NO FIRE SPRINKLERS REQUIRED IN CEILING POCKET IN ACCORDANCE WITH NFPA 13 8.6.7

13. OFFSET BRANCH LINES AS REQURIED BELOW EXISTING DEEPER CONCRETE BEAMS AT BUILDING CORNERS

14. INSTALL REMOVABLE MECHANICAL COUPLING IN ACCORDANCE WITH NFPA 13 8.15.21 AT POINT OF CONNECTION BETWEEN FEED MAIN AND FIRE SPRINKLER SYSTEM ON EACH FLOOR. MECHANICAL COUPLING TO ALLOW FOR TEMPORARY ISOLATION OF FIRE SPRINKLER ON EACH FLOOR THROUGH REMOVAL OF COUPLING AND INSERTION OF CAP.

FIRE SPRINKLER SYMBOL LEGEND

SYMBOL	DESCRIPTION
	QUICK RESPONSE, STANDARD ORIFICE (K-5.6), ORDINARY TEMPERATURE, BRASS, UPRIGHT FIRE SPRINKLER INSTALLED ON EXPOSED BRANCH LINE
	QUICK RESPONSE, STANDARD ORIFICE (K-5.6), ORDINARY TEMPERATURE, WHITE PAINTED, PENDENT FIRE SPRINKLER INSTALLED ON 1" DROP WITH WHITE RECESSED ESCUTCHEON.
	QUICK RESPONSE, EXTENDED COVERAGE (K-8.0), ORDINARY TEMPERATURE, CONCEALED TYPE PENDENT FIRE SPRINKLER WITH WHITE COVER PLATE.
	QUICK RESPONSE, STANDARD ORIFICE (K-5.6), INTERMEDIATE TEMPERATURE, BRASS, SIDEWALL FIRE SPRINKLER INSTALLED ON EXPOSED BRANCH LINE
	QUICK RESPONSE, EXTENDED COVERAGE, ORDINARY TEMPERATURE, CONCEALED TYPE SIDEWALL FIRE SPRINKLER. SPRINKLER IS SUPPLIED BY OWNER.
	FIRE SPRINKLER RISER
	DOUBLE CHECK ASSEMBLY BACKFLOW PREVENTER
	CONTROL VAVLE WITH FREE STANDING POST INDICATOR
	CHECK VALVE
	2-WAY, FREE STANDING FIRE DEPARTMENT CONNECTION
	VERTICAL RISE FROM PIPE
	VERTICAL DROP FROM PIPE
	VERTICAL TRANSITION IN PIPING
	PIPE CAP/FLUSHING CONNECITON
X'-X" AFF	PIPING ELEVATION (CENTERLINE ABOVE FINISHED FLOOR)
X	HYDRAULIC CALCULAITON NODE POINT

SANDERS ASSOCIATES ARCHITECTS
2668 Grant Avenue
Ogden, UT 84401
Phone: 801.621.7303
www.sandersarch.com

Seal

LICENSED PROFESSIONAL ENGINEER No. 191330 GREGORY T. JONES STATE OF UTAH

02/03/15

Consultant

PROTECTION CONSULTANTS, INC.
Fire Protection Engineers
-Since 1983-
1199 South Main Street, Suite #101 Centerville, UT 84014
Phone: 801-295-6070
Fax: 801-677-0000

Project Name

WSU- MILLER ADMINISTRATION
MEP Upgrades and Remodel
3848 HARRISON BLVD.
OGDEN, UTAH 84401

Issued

No.	Date	Description
1	01/16/15	DFCM PLAN REVIEW
2	02/03/15	BID DOCUMENTS

Revision

No.	Date	Description

DFCM Project No.	14031810
SAA Project No.	214016
Drawn By	BAJ
Checked By	GTJ

Drawing Title

FIRE SPRINKLER PLAN - 2ND FLOOR

Sheet Number

FP101

DFCM approval

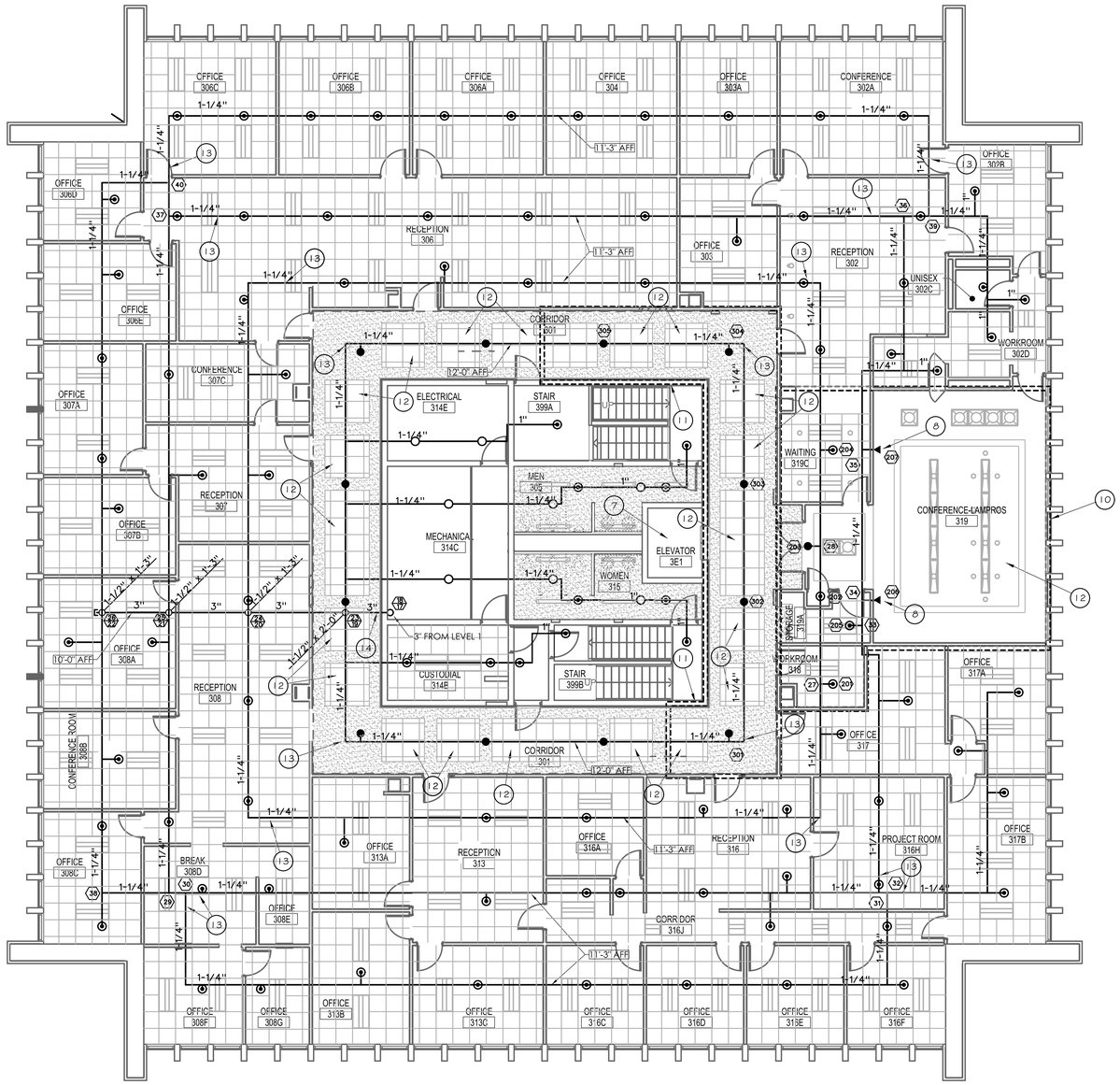

1 FIRE SPRINKLER PLAN - 3RD FLOOR

1/8" = 1'-0"

N

FIRE SPRINKLER KEY NOTES

RE: SHEETS FP100, FP101 & FP102

01. CONNECT TO EXISTING 8" WATER LINE EAST OF BUILDING TO SUPPLY NEW FIRE SPRINKLER SYSTEM IN BUILDING. WATER SUPPLY AVAILABLE FROM EXISTING 8" WATER LINE WAS DETERMINED BY FIRE HYDRANT FLOW TEST CONDUCTED AUGUST 26, 2014 AND WAS MEASURED TO BE:
STATIC PRESSURE: 134 PSI
RESIDUAL PRESSURE: 72 PSI
FLOW: 4,687 PSI

02. INSTALL NEW 4" FIRE PROTECTION WATER SUPPLY (CEMENT LINED DUCTILE IRON) TO BUILDING. CONNECT TO EXISTING 8" WATER LINE EAST OF BUILDING. LOCATE PIPING AS SHOWN ON PLAN AND PROVIDE A MINIMUM 66" DEPTH OF BURY TO PROTECT PIPING AGAINST FREEZING. COORDINATE WITH ALL OTHER BURIED UTILITIES AND MAKE MINOR ADJUSTMENTS TO LOCATION OF WATER SUPPLY AS REQUIRED. OBTAIN ALL REQUIRED APPROVALS/PERMITS FROM UTILITY PROVIDER. INSTALL, RESTRAIN, FLUSH AND PRESSURE TEST PIPING IN ACCORDANCE WITH ALL APPLICABLE REQUIREMENTS OF NFPA 13.

03. INSTALL CONCRETE VAULT IN EXISTING LANDSCAPED AREA FOR FIRE PROTECTION CONTROL/CHECK VALVES. SIZE AND LOCATION OF VAULT TO BE DETERMINED BY INSTALLING CONTRACTOR. SEE DETAIL 1 ON SHEET FP500.

04. 2-WAY, FREE STANDING FIRE DEPARTMENT CONNECTION (FDC). INSTALL IN LANDSCAPE PLANTER ON NORTH SIDE OF BUILDING ADJACENT TO FIRE LANE (SIDEWALK). PROVIDE SIGN TO INDICATE BUILDING SERVED BY FDC. CONNECT TO FIRE PROTECTION WATER SUPPLY IN CONCRETE VAULT. SEE DETAIL 1 ON SHEET FP500.

05. INSTALL 4" SUPPLY TO FIRE SPRINKLER RISER THROUGH EXISTING UTILITY TUNNEL. TRANSITION FROM UNDERGROUND TO ABOVEGROUND PIPING AT TUNNEL WALL. PROVIDE CLEARANCE AROUND PIPING PENETRATION OF WALL PER NFPA 13 AND FILL VOID SPACE WITH WATER-PROOF, FLEXIBLE FILL MATERIAL.

06. FIRE SPRINKLER RISER WITH DOUBLE CHECK ASSEMBLY BACKFLOW PREVENTER. SEE DETAIL 2 ON SHEET FP500.

07. INSTALL FIRE SPRINKLER TO PROTECT BOTTOM OF ELEVATOR SHAFT IN ACCORDANCE WITH NFPA 13 8.15.5.1. NO FIRE SPRINKLER PROTECTION IS REQUIRED AT THE TOP OF THE NON-COMBUSTIBLE ELEVATOR SHAFT IN ACCORDANCE WITH NFPA 13 8.15.5.5.

08. EXISTING ORNAMENTAL WALLS AND CEILING IN CONFERENCE 317 WILL NOT BE REPLACED AS PART OF BUILDING RENOVATION. USE EXTENDED COVERAGE SIDE DISCHARGE SPRINKLERS FIRE SPRINKLERS TO PROTECT ROOM TO MINIMIZE NEW PIPING REQUIRED AND SUBSEQUENT DISRUPTION TO EXISTING CEILING. CARTEFULLY PENETRATE EXISTING ACOUSTICAL PANEL WALL AS REQUIRED FOR INSTALLATION OF SIDEWALL SPRINKLER. PROTECT EXISTING FABRTIC SURFACE TREATMENT TO PREVENT DAMAGE.

09. HYDRAULIC DESIGN AREA #1 - 1ST FLOOR MECHANICAL ROOM: ORDINARY HAZARD GROUP 2 - 0.20 GPM/SQ FT OVER 970 SQ FT (AREA REDUCED PER NFPA 13 11.2.3.2.3) WITH 250 GPM HOSE ALLOWANCE.

10. HYDRAULIC DESIGN AREA #2 - 3RD FLOOR OFFICE SPACES: LIGHT HAZARD - 0.10 GPM/SQ FT OVER 900 SQ FT (AREA REDUCED PER NFPA 13 11.2.3.2.3) WITH 100 GPM HOSE ALLOWANCE.

11. HYDRAULIC DESIGN AREA #3 - 3RD FLOOR CORRIDOR: LIGHT HAZARD - 0.10 GPM/SQ FT OVER HYDRAULICALLY MOST REMOTE 7 SPRINKLERS (NFPA 13 11.2.3.3.7) WITH 100 GPM HOSE ALLOWANCE.

12. NO FIRE SPRINKLERS REQUIRED IN CEILING POCKET IN ACCORDANCE WITH NFPA 13 8.6.7

13. OFFSET BRANCH LINES AS REQURIED BELOW EXISTING DEEPER CONCRETE BEAMS AT BUILDING CORNERS

14. INSTALL REMOVABLE MECHANICAL COUPLING IN ACCORDANCE WITH NFPA 13 8.15.21 AT POINT OF CONNECTION BETWEEN FEED MAIN AND FIRE SPRINKLER SYSTEM ON EACH FLOOR. MECHANICAL COUPLING TO ALLOW FOR TEMPORARY ISOLATION OF FIRE SPRINKLER ON EACH FLOOR THROUGH REMOVAL OF COUPLING AND INSERTION OF CAP.

FIRE SPRINKLER SYMBOL LEGEND

SYMBOL	DESCRIPTION
○	QUICK RESPONSE, STANDARD ORIFICE (K-5.6), ORDINARY TEMPERATURE, BRASS, UPRIGHT FIRE SPRINKLER INSTALLED ON EXPOSED BRANCH LINE
⊙	QUICK RESPONSE, STANDARD ORIFICE (K-5.6), ORDINARY TEMPERATURE, WHITE PAINTED, PENDENT FIRE SPRINKLER INSTALLED ON 1" DROP WITH WHITE RECESSED ESCUTCHEON.
●	QUICK RESPONSE, EXTENDED COVERAGE (K-8.0), ORDINARY TEMPERATURE, CONCEALED TYPE PENDENT FIRE SPRINKLER WITH WHITE COVER PLATE.
◁	QUICK RESPONSE, STANDARD ORIFICE (K-5.6), INTERMEDIATE TEMPERATURE, BRASS, SIDEWALL FIRE SPRINKLER INSTALLED ON EXPOSED BRANCH LINE
◀	QUICK RESPONSE, EXTENDED COVERAGE, ORDINARY TEMPERATURE, CONCEALED TYPE SIDEWALL FIRE SPRINKLER. SPRINKLER IS SUPPLIED BY OWNER.
△	FIRE SPRINKLER RISER
	DOUBLE CHECK ASSEMBLY BACKFLOW PREVENTER
	CONTROL VAVLE WITH FREE STANDING POST INDICATOR
N	CHECK VALVE
	2-WAY, FREE STANDING FIRE DEPARTMENT CONNECTION
	VERTICAL RISE FROM PIPE
	VERTICAL DROP FROM PIPE
	VERTICAL TRANSITION IN PIPING
	PIPE CAP/FLUSHING CONNECITON
X'-X" AFF	PIPING ELEVATION (CENTERLINE ABOVE FINISHED FLOOR)
(X)	HYDRAULIC CALCULAITON NODE POINT

DFCM approval

SANDERS ASSOCIATES ARCHITECTS
2668 Grant Avenue
Ogden, UT 84401
Phone: 801.621.7303
www.sandersarch.com

Seal

LICENSED PROFESSIONAL ENGINEER No. 191330 GREGORY T. JONES STATE OF UTAH

02/03/15

Consultant

PROTECTION CONSULTANTS, INC.
Fire Protection Engineers
-Since 1983-
1199 South Main Street, Suite #101 Centerville, UT 84014
Phone: 801-295-6070
Fax: 801-677-0000

Project Name

WSU- MILLER ADMINISTRATION
MEP Upgrades and Remodel
3848 HARRISON BLVD.
OGDEN, UTAH 84401

Issued

No.	Date	Description
1	01/16/15	DFCM PLAN REVIEW
2	02/03/15	BID DOCUMENTS

Revision #

No.	Date	Description

DFCM Project No.	14031810
SAA Project No.	214016
Drawn By	BAJ
Checked By	GTJ

Drawing Title

FIRE SPRINKLER PLAN - 3RD FLOOR

Sheet Number

FP102

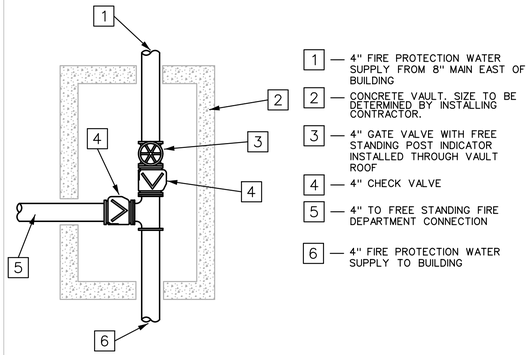

1 FIRE PROTECTION VAULT SCHEMATIC
NO SCALE

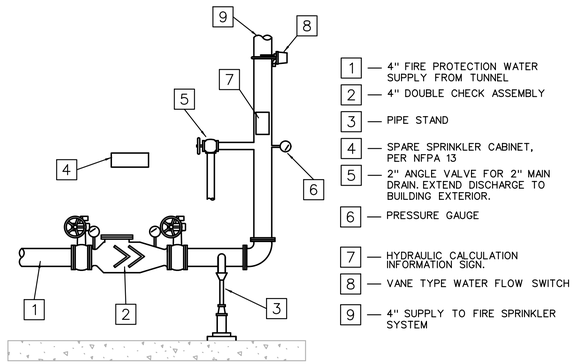

2 FIRE SPRINKLER RISER SCHEMATIC
NO SCALE

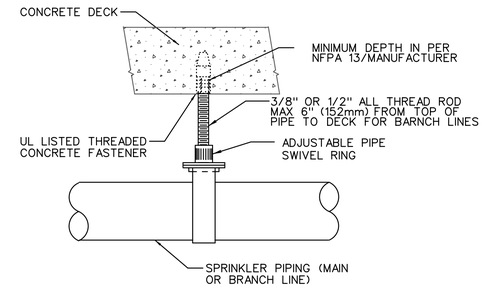

3 PIPE SUPPPORT DETAIL
NO SCALE

SWAY BRACE PIPE SIZING SCHEDULE	
MAXIMUM LENGTHS FOR BRACING SHOWN ARE BASED ON SCHEDULE 40 PIPE BRACES AND 45° ANGLE ATTACHMENT BRACING ON TYPICAL GRIDDED SPRINKLER SYSTEMS HAVING 4" CROSS-MAINS AND 2" BRANCH-LINES.	
BRACE DIA.	MAX. LENGTH
1"	7'-0"
1-1/4"	9'-0"
1-1/2"	15'-6"
2"	19'-6"

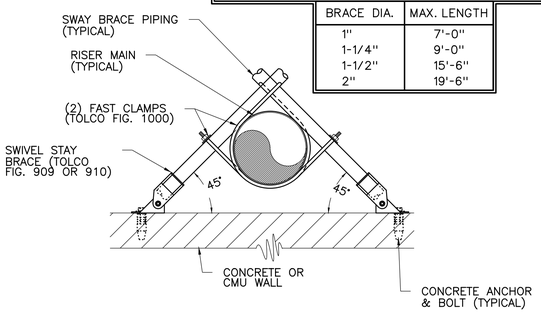

4 4-WAY SWAY BRACE DETAIL
NO SCALE

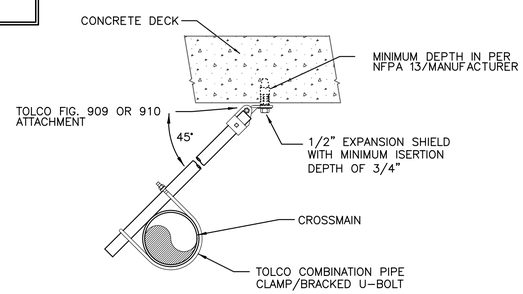

5 LATERAL SWAY BRACE DETAIL
NO SCALE

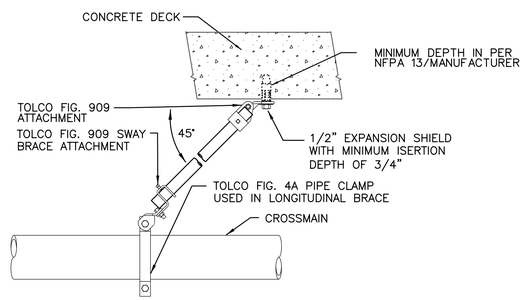

6 LONGITUDINAL SWAY BRACE DETAIL
NO SCALE

SYSTEM NUMBER: 1	REMOTE AREA NUMBER: 1
OCCUPANCY CLASSIFICATION: ORDINARY HAZARD GROUP 2	
DENSITY: 0.20 GPM/SQ.FT.	AREA OF APPLICATION: 970 SQ.FT.
NUMBER OF HEADS CALCULATED: 12	
SQ.FT. PER HEAD: 130 (MAX.)	ORIFICE SIZE: 1/2"
SPRINKLER SYSTEM DEMAND: 367.9 GPM AT 51.5 PSI AT B.O.R.	
HOSE STREAM REQUIRED: 0 GPM (INSIDE) 250 GPM (OUTSIDE)	
TOTAL WATER REQUIRED: 617.9 GPM AT 61.7 PSI AT P.O.C.	
TOTAL WATER AVAILABLE: 617.9 GPM AT 132.5 PSI AT P.O.C.	
SYSTEM NUMBER: 1	REMOTE AREA NUMBER: 2
OCCUPANCY CLASSIFICATION: LIGHT HAZARD	
DENSITY: 0.10 GPM/SQ.FT.	AREA OF APPLICATION: 900 SQ.FT.
NUMBER OF HEADS CALCULATED: 7	
SQ.FT. PER HEAD: 225 (MAX.)	ORIFICE SIZE: 1/2"
SPRINKLER SYSTEM DEMAND: 200.8 GPM AT 66.5 PSI AT B.O.R.	
HOSE STREAM REQUIRED: 0 GPM (INSIDE) 100 GPM (OUTSIDE)	
TOTAL WATER REQUIRED: 300.8 GPM AT 73.1 PSI AT P.O.C.	
TOTAL WATER AVAILABLE: 300.8 GPM AT 133.6 PSI AT P.O.C.	
SYSTEM NUMBER: 1	REMOTE AREA NUMBER: 3
OCCUPANCY CLASSIFICATION: LIGHT HAZARD	
DENSITY: 0.10 GPM/SQ.FT.	AREA OF APPLICATION: 900 SQ.FT.
NUMBER OF HEADS CALCULATED: 5	
SQ.FT. PER HEAD: 225 (MAX.)	ORIFICE SIZE: 17/32"
SPRINKLER SYSTEM DEMAND: 135.1 GPM AT 61.0 PSI AT B.O.R.	
HOSE STREAM REQUIRED: 0 GPM (INSIDE) 100 GPM (OUTSIDE)	
TOTAL WATER REQUIRED: 235.1 GPM AT 68.8 PSI AT P.O.C.	
TOTAL WATER AVAILABLE: 235.1 GPM AT 133.8 PSI AT P.O.C.	

7 HYDRAULIC DESIGN INFORMATION
NO SCALE

8 NOT USED
NO SCALE

9 NOT USED
NO SCALE

FIRE SPRINKLER GENERAL NOTES

RE: SHEETS FP100, FP101 & FP102

1. GENERAL SCOPE OF WORK:
FURNISH ALL MATERIALS, EQUIPMENT AND SUPPLIES AND PERFORM ALL WORK AND OPERATIONS TO DESIGN, CONSTRUCT AND MAKE FUNCTIONAL A NEW FIRE SPRINKLER SYSTEM TO PROVIDE FIRE PROTECTION OF ALL AREAS OF THE EXISTING WSU MILLER ADMINISTRATION BUILDING. THE SYSTEM DESIGN SHALL MEET THE REQUIREMENTS OF NFPA 13 2010 EDITION AND BE IN ACCORDANCE WITH THE DRAWINGS AND SPECIFICATIONS. WORK INCLUDES BUT IS NOT LIMITED TO:
A. UNDERGROUND FIRE SERVICE
B. FIRE SPRINKLERS, PIPING, SUPPORTS AND BRACES
C. FIRE ALARM SYSTEM INTERFACE

2. THE DESIGN OF THE FIRE SPRINKLER SYSTEM CONTAINED ON THESE DRAWINGS IS CONCEPTUAL IN NATURE. THE LOCATIONS SHOWN ON THESE DRAWINGS FOR SPRINKLERS, PIPING AND OTHER FIRE PROTECTION EQUIPMENT ARE APPROXIMATE AND MUST BE ADJUSTED WHERE REQUIRED TO MATCH ACTUAL BUILDING CONDITIONS. THE FIRE SPRINKLER CONTRACTOR SHALL BE RESPONSIBLE TO DEVELOP THE FINAL DESIGN FOR THE FIRE SPRINKLER SYSTEM, PREPARE SHOP DRAWINGS, HYDRAULIC CALCULATIONS AND OBTAIN APPROVAL FROM AUTHORITY HAVING JURISDICTION.

3. THE FIRE SPRINKLER SYSTEM SHALL BE DESIGNED AND INSTALLED IN ACCORDANCE WITH THE APPLICABLE PROVISIONS OF THE FOLLOWING CODES AND STANDARDS:
A. INTERNATIONAL BUILDING CODE (IBC) - 2012 EDITION
B. INTERNATIONAL FIRE CODE (IFC) - 2012 EDITION
C. INTERNATIONAL PLUMBING CODE (IPC) - 2012 EDITION
D. NFPA 13 INSTALLATION OF FIRE SPRINKLER SYSTEMS (2010)
E. NFPA 24 INSTALLATION OF PRIVATE FIRE SERVICE MAINS (2010)
F. NFPA 72 NATIONAL FIRE ALARM CODE (2010)
G. STATE OF UTAH FIRE MARSHAL REQUIREMENTS
H. STATE OF UTAH DFCM REQUIREMENTS

4. QUALITY ASSURANCE: ALL EQUIPMENT, MATERIAL AND DEVICES USED FOR THE FIRE SPRINKLER SYSTEM INSTALLATION SHALL BE UL LISTED AND/OR FM APPROVED FOR USE IN FIRE PROTECTION SYSTEMS.

5. SUBMITTALS: CONTRACTOR SHALL PREPARE AND SUBMIT SHOP DRAWINGS, MATERIAL DATA SHEETS AND CALCULATIONS FOR FIRE SPRINKLER SYSTEM TO ALL AUTHORITIES HAVING JURISDICTION FOR REVIEW/APPROVAL PRIOR TO ORDERING OR INSTALLING ANY EQUIPMENT. SUBMITTALS SHALL CONFORM TO ALL APPLICABLE REQUIREMENTS OF REFERENCED CODES AND STANDARDS.

6. WATER SUPPLY AVAILABLE FOR FIRE SPRINKLER SYSTEM ACCORDING TO WATER FLOW TEST CONDUCTED AT PROJECT SITE BY PCI AUGUST 26, 2014. PROVIDE A MINIMUM 10% PRESSURE MARGIN IN HYDRAULIC CALCULATIONS:
STATIC PRESSURE: 134 PSI
RESIDUAL PRESSURE: 72 PSI
FLOW: 4,687 GPM

7. FIRE SPRINKLER DESIGN DENSITIES:
A. MECHANICAL, ELECTRICAL, STORAGE ROOMS AND SIMILAR AREAS ORDINARY HAZARD GROUP 2 0.20 GPM/SQ FT OVER 1,500 SQ FT (OR LARGEST AREA WITH 250 GPM HOSE ALLOWANCE.
B. ALL OTHER AREAS - LIGHT HAZARD 0.10 GPM/SQ FT OVER 1,500 SQ FT WITH 100 GPM HOSE ALLOWANCE.
C. SIZE OF REMOTE AREAS MAY BE REDUCED PER NFPA 13 WHERE QUICK RESPONSE SPRINKLERS ARE INSTALLED.

8. SPRINKLER SPACING:
A. ORDINARY HAZARD: 130 SQ FT MAXIMUM. 15' MAXIMUM AND 6' MINIMUM BETWEEN SPRINKLERS
B. LIGHT HAZARD: 225 SQ FT MAXIMUM. 15' MAXIMUM AND 6' MINIMUM BETWEEN SPRINKLERS.

9. OFF-PREMISE SUPERVISION SHALL BE PROVIDED FOR ALL FIRE SPRINKLER SYSTEM CONTROL VALVES AND FLOW SWITCHES. CONNECT TO EXISTING FIRE ALARM SYSTEM IN BUILDING.

10. INSTALL PIPING CONCEALED ABOVE CEILINGS WHERE CEILINGS ARE PROVIDED. WHERE NO CEILING IS PROVIDED PIPING MAY BE EXPOSED. INSTALL PIPING TIGHT TO BOTTOM OF STRUCTURE. OFFSET PIPING AS REQUIRED TO AVOID CONFLICTS WITH EXISTING BUILDING ELEMENTS.

11. FIRE SPRINKLER PIPING SHALL BE STEEL PIPE CONFORMING TO ANSI/ASTM A53, ASTM A135 OR A795. 2-1/2" AND LARGER (NOMINAL) PIPING SHALL BE SCHEDULE 10. 2" AND SMALLER (NOMINAL) SHALL BE ALLIED DYNATHREAD PIPING OR APPROVED EQUAL. ALL PIPING SHALL HAVE A CRR (U.L. CORROSION RESISTANCE RATIO) EQUAL TO OR GREATER THAN 1.0.

12. FITTINGS: PROVIDE CAST IRON FITTINGS FOR THREADED PIPE. PROVIDE RUBBER GASKETED FITTINGS FOR ROLL GROOVED SCHEDULE 10 MAINS. PROVIDE WELDED OUTLETS FOR BRANCH LINE ATTACHMENTS TO MAINS. PLAIN END FITTINGS ARE NOT ACCEPTABLE.

13. HANGERS: 1-1/4" AND SMALLER PIPE: MINIMUM ONE HANGER PER LENGTH OF PIPE AND MAXIMUM 12'-0" BETWEEN HANGERS. 1-1/2" AND LARGER: MINIMUM ONE HANGER PER LENGTH OF PIPE AND MAXIMUM 15'-0" BETWEEN HANGERS.

14. SEISMIC BRACING: BRACING SHALL BE PROVIDED FOR ALL NEW CROSS MAIN PIPING AS REQUIRED BY NFPA #13. RIGID COUPLINGS SHALL BE USED ON ALL CROSS MAINS.

15. PIPING SHALL BE INSTALLED IN AREAS WHERE TEMPERATURE IS RELIABLY MAINTAINED ABOVE 40F. IN AREAS WHERE PIPING IS NOT RELIABLY MAINTAINED ABOVE 40F, FILL PIPING WITH AN ANTI-FREEZE SOLUTION AND ISOLATE FROM WATER FILLED PIPING.

DFCM approval

SANDERS ASSOCIATES ARCHITECTS
2668 Grant Avenue
Ogden, UT 84401
Phone: 801.621.7303
www.sandersarch.com

Seal

LICENSED PROFESSIONAL ENGINEER No. 191330 GREGORY T. JONES STATE OF UTAH

02/03/15

Consultant

PROTECTION CONSULTANTS, INC.
Fire Protection Engineers
-Since 1983-
1199 South Main Street, Suite #101 Centerville, UT 84014
Phone: 801-295-6070 Fax: 801-677-0000

Project Name

WSU- MILLER ADMINISTRATION
MEP Upgrades and Remodel
3848 HARRISON BLVD.
OGDEN, UTAH 84401

Issued

No.	Date	Description
1	01/16/15	DFCM PLAN REVIEW
2	02/03/15	BID DOCUMENTS

Revision

No.	Date	Description

DFCM Project No.	14031810
SAA Project No.	214016
Drawn By	BAJ
Checked By	GTJ

Drawing Title

FIRE SPRINKLER NOTES, DETAILS & SCHEDULES

Sheet Number

FP500