UTAH STATE DEVELOPMENTAL CENTER

CAMPUS TUNNEL AND INFRASTRUCTURE STUDY

DIVISION OF FACILITIES CONSTRUCTION MANAGEMENT

DFCM PROJECT No. 12245410

UTAH STATE DEVELOPMENTAL CENTER
FACILITIES MANAGEMENT
2013

WHW Engineering, Inc.
8619 South Sandy Parkway #101
Sandy, Utah 84070
p 801.466.4021 – f 801.466.8536
excellence@whw-engineering.com

TABLE OF CONTENTS

Section 1 - Executive Summary

1.1 History
1.2 Executive Summary

Section 2 – Description of Campus Heating, Cooling, Electrical and Domestic Water Infrastructure

2.1 Introduction
2.2 Description of Tunnel and Tunnel Utilities
2.3 Description of Electrical and Domestic Water Infrastructure
2.4 Tunnel Key Plan

Section 3 - Existing Steam and Condensate Distribution System Evaluation

3.1 Introduction
3.2 Evaluation of Overall System Integrity, Design and Performance
3.3 Evaluation of Steam and Condensate System Specialties
3.4 Evaluation of Steam and Condensate Piping Condition
3.5 Evaluation of Isolation Valve Locations and Capabilities
3.6 Evaluation of Piping Insulation and Jackets
3.7 Identification of Crucial Steam System Inadequacies and Potential Failures
3.8 Summary

Section 4 – Existing Chilled Water Distribution System Evaluation

4.1 Introduction
4.2 Evaluation of Overall System Integrity, Design and Performance
4.3 Evaluation of Chilled Water Piping Condition
4.4 Evaluation of Chilled Water Isolation Valve Locations, System Specialties and Capabilities
4.5 Evaluation of Chilled Water Piping Insulation and Jackets
4.6 Identification of Crucial Chilled Water System Inadequacies and Potential Failures
4.7 Summary

Section 5 – Tunnel Structural Evaluation – ARW Engineers Evaluation and Report

5.1 Evaluation and Recommendations of the Tunnel Concrete Structural System

Section 6 – Existing Tunnel Electrical Distribution Infrastructure – Thomas and Kolkman Engineering Evaluation and Report

6.1 Evaluation of Tunnel Electrical Systems
6.2 Evaluation of Campus Electrical Distribution System
6.3 Recommendations

Section 7 – Existing Civil Site Evaluation for Campus Domestic Water Distribution System - McNeil Engineering Evaluation and Report

7.1 Evaluation and Recommendations of Campus Domestic Water Distribution System

Section 8 – Recommendations and Master Plan

8.1 Introduction
8.2 Mechanical System Recommendations
8.3 Structural Recommendations
8.4 Electrical Recommendations
8.5 Domestic Water Distribution Recommendations
8.6 Recommendations Summary

Section 9 – Statement of Probable Costs

9.1 Introduction
9.2 Probable Cost

Appendix

A.1 References
- Acknowledgements
- References

A.2 Campus Tunnel and Infrastructure Reference Drawings
- Mechanical Drawings
- Electrical Drawings
- Civil Water Distribution Drawing

A.3 Mechanical Cost Calculations

A.4 Mechanical Systems Auxiliary Data
- Steam Trap Selection Guide
- Typical Steam System Details
- Typical Steam Expansion Equipment Data
- Typical Isolation Valve Equipment Data

A.5 Mechanical Photographs

A.6 Structural Photographs

A.7 Electrical Systems Auxiliary Data

A.8 Civil Water Systems Auxiliary Data

SECTION 1 – EXECUTIVE SUMMARY

1.1 History

A. The Utah State Development Center (USDC), located in American Fork, Utah was established in 1929 to accommodate and institutionalize the mentally and physically challenged. The center was called the American Fork Training School and could accommodate patients for short or long term stay.

   The center has grown from its humble 1929 beginnings to a center of over 36 multi-use buildings and is now named the "Utah State Development Center". Over the years the Center's philosophy has been diverted from institutionalizing, to short stay with the patients learning to integrate into the general population and society utilizing more directed care.

   Many of the services that were provided on campus are now being outsourced i.e. - Central Kitchen and Laundry. The new living spaces are equipped with kitchen and laundry facilities so the patients can learn to cook and take care of their laundry.

B. The campus infrastructure system has been constructed in phases over time as the campus facilities have grown. Many of the original infrastructure components are still in use. The aging campus infrastructure system has become a major cause of concern for the USDC facility personnel and the project managers of the Utah DFCM.

C. WHW Engineering, Inc. was contracted to perform an overall infrastructure study and evaluation. The study and evaluation team consists of the following disciplines:

   1. WHW Engineering, Inc. – Prime Consultant / Mechanical Engineers
   2. ARW Engineers – Structural Engineering Consultant
   3. Thomas & Kolkman Engineering – Electrical Engineering Consultant
   4. McNeil Engineering – Civil Engineering Consultant

1.2 Executive Summary

A. This Study Focuses on the following campus infrastructure systems:

   1. Existing utility tunnel distribution system.
   2. Campus steam and condensate distribution system.
   3. Campus chilled water distribution system.
   4. Existing tunnel structural systems.
   5. Campus electrical distribution system and tunnel electrical systems.
   6. Campus domestic water distribution system.

B. This study identifies all the above systems and evaluates age, condition, and provides upgrade recommendations for each.

C. Ultimately, the existing tunnel system and utilities located within the tunnels are aging, in generally severe condition, and should be replaced.

D. The existing steam and condensate piping and components are between four (4) and eighty (80) years old. The piping ranges from fair to severe condition depending on location. See Section 3 for a detailed evaluation of the steam and condensate piping, and associated components.

E. Much of the steam and condensate piping is direct buried, or in trenches that are not accessible. We can only assume the condition of this piping by referencing the date of installation, and comparing the outward appearance and condition of the exposed piping within the tunnel system.

F. The existing chilled water distribution system is in severe condition. See Section 4 for a detailed evaluation of the campus chilled water distribution systems.

G. The structural system supporting the tunnel is in severe condition and needs to be replaced. See Section 5 for the detailed evaluation of the tunnel structural system performed by ARW Structural Engineers.

H. The tunnel electrical systems are in fair to severe condition. See Section 6.1 for the detailed evaluation of the tunnel electrical systems.

I. It is the recommendation that a new modern, structurally engineered tunnel system be installed and connected to all existing buildings. The new tunnel should include knockouts to accommodate growth consistent to the overall campus master plan. The new tunnel system should be outfitted with new steam and condensate piping, new steam and condensate components, new chilled water piping and components, and new tunnel electrical systems.

J. The existing campus electrical service distribution system is in fair to severe condition. See Section 6.2 for the detailed evaluation of the campus electrical service distribution systems.

K. With replacing the campus distribution transformers with the same capacity transformers, the electric distribution system appears to be adequately sized for the demand load for the existing and any additional buildings in the future.

L. The campus domestic water service distribution system serving the campus in mostly direct buried. Parts of the domestic water distribution system are in need of replacement and service size upgrades. See Section 7 for the detailed evaluation of the campus domestic water distribution system.

M. The far North 6 inch domestic water service to the campus from 900 East Street is too small for the fire hydrants and as a back-up system to the main

10 inch service. Piping needs to be removed and replaced with a new 10 inch service.

N. All galvanized domestic water piping and any pre 1960's domestic water piping should be removed and replaced.

SECTION 2 – DESCRIPTION OF CAMPUS HEATING, COOLING, ELECTRICAL, AND DOMESTIC WATER INFRASTRUCTURE

2.1 Introduction

A. This section describes the overall USDC infrastructure distribution in regards to the heating media, cooling media, electrical distribution, domestic water for fire, and domestic water.

B. Each discipline is detailed and evaluated in separate sections throughout the report.

2.2 Description of Tunnel and Tunnel Utilities

A. For the sake of clarity and correct locations, a Tunnel Key Plan has been created and made part of this report. This Tunnel Key Plan is located in Section 2.4. The Key Plan will assist the reader in determining locations throughout the report.

B. Campus Tunnel Systems:

1. The campus distribution tunnels consist of cast in place concrete with concrete or metal decking roofs.
2. Tunnel sections A, B, C (west of administration building) and F were installed around 1932.
3. Tunnel sections C (east of administration building) D and E were installed between 1979 and 1980.

Cast In Place Concrete Tunnel with Concrete Roof

Cast In Place Concrete Tunnel with Metal Pan Roof

4. The physical size of the existing tunnels are much too small and do not meet the standards of other tunnels constructed in other institutions throughout the state. The small tunnels are detrimental in providing maintenance, safety procedures, general up-keep, and system additions within the tunnels.

5. Tunnels should be a minimum of 6'-0"wide x 7'-0" high. This size of tunnel allows for piping on one side of the tunnel and electrical distribution and cable trays on the opposite wall. The larger size also provides adequate space for maintenance, general up-keep of the tunnels, system additions, and safe evacuation routes.

C. Campus Tunnel Utilities:

1. The campus main tunnel system serves the following buildings:

    a. Heating Plant
    b. Chiller Plant
    c. Recreation Building
    d. Vocational Shop
    e. Administration Building
    f. Cottonwood
    g. Pleasant View
    h. Aspen
    i. Rain Tree
    j. Willow Creek
    k. Quail Run
    l. Sunset
    m. Oakridge

2. Tunnel section F serving the Auditorium is served by direct buried piping and not connected to the main tunnel system.
3. The utilities located within the tunnels include steam, condensate return, chilled water supply and return, some well and domestic water, and electrical.
4. Chilled water is only found in tunnel sections D and E. Steam and condensate piping is found in all tunnel sections.
5. Steam and condensate piping is also distributed by means of trenches and direct burial.
6. Direct buried steam and condensate piping serves the following buildings:

    a. Laundry- Physical Facilities
    b. Green House
    c. Maintenance Shops
    d. Laurel Wood
    e. Tulip
    f. Pineridge
    g. Comp Therapy
    h. Evergreen

7. Trench steam and condensate piping serves the following buildings:

    a. Heather
    b. Woodland
    c. Rose
    d. Warehouse

e. Central Kitchen
f. TLC
g. Family Services

8. The electrical in the tunnel consists of lighting and switches, fire alarm system network wiring, communications, and the medium-voltage feeders for the 12,470 / 7,200 volt primary distribution system. See Section 6 for evaluation.

Electrical Distribution in Tunnel Section B

Electrical Distribution From Central Chiller Plant Tunnel Section D

9. The domestic water piping in the tunnel is minimal, and the main water valves are closed. Water piping that served the old boiler plant has been terminated within tunnel section A. The main water valves are located at the cross in tunnel section B. See Section 7 for evaluation.

2.3 Description of Electrical and Domestic Water Infrastructure Distribution

A. Electrical Service Infrastructure:

1. The campus electrical distribution system starts at the Rocky Mountain Power primary metering cabinet located on 900 East Street with a service voltage of 12,720 / 7,200 volt, 3 phase, 4 wire feed. See the electrical distribution drawing in Appendix A.2.
2. The electrical service is routed throughout the campus by a combination of direct buried, overhead lines, and within the utility tunnels.
3. Electrical distribution begins at 900 East Street on the East end of campus and is routed West throughout the entire campus to the central boiler plant.
4. Electrical distribution from the 900 East Street is routed underground to a switch at the chiller plant located in the northeast side of campus. The power source from this switch is routed west in the tunnels and direct buried to serve the campus in a radial feed configuration.

B. Domestic Water Infrastructure:

1. The domestic water source for the campus fire and water requirements, originates at two locations on 900 East Street. There is also a well system within the campus that may also be used as a water source. See water distribution drawing in Appendix.
2. The far north connection source is a 6 inch service main from 900 East Street.
3. The domestic water and fire water service throughout campus is distributed underground from the two sources. The 10 inch service from 900 East Street is direct buried. This service is routed west where it splits to a 10 inch routed north and a 6 inch routed west. The 10 inch split off turns west at the north end of campus. The 6 inch split off feeds the south end of campus.
4. The second source from 900 East Street is a 6 inch feed that runs west and north of the campus. This service turns southwest of 800 East Street and connects into the primary water source forming a looped system.

6" Water Main from Branch Tunnel B
Recreation Building

Main Water Line in Branch Tunnel
to Vocational Shop

TUNNEL "E"
TUNNEL "D"
TR-1
TR-1
DB-2
DB-2
TR-2
TUNNEL "C"
DB-1
TUNNEL "B"
DB-4
DB-4
DB-4
TR-3
DB-3
TUNNEL "F"
TUNNEL "A"
DB-5
A USDC TUNNEL KEY PLAN
N

SECTION 3 – EXISTING STEAM AND CONDENSATE DISTRIBUTION SYSTEM EVALUATION

3.1 Introduction

A. The campus wide heating source for both building heat and the domestic hot water is steam produced in a central boiler plant located on the south west corner of the campus. The new central boiler plant was constructed in 2010.

B. The Central boiler plant consists of three (3) scotch marine type steam boilers with a space for a future fourth boiler if ever required. The boiler capacities are as follows:

Boiler #1- 12,075 #/HR
Boiler #2- 12,075 #/HR
Boiler #3- 8,625 #/HR

C. The capacity of the boilers is large enough to handle the required load for the existing buildings and the noted master plan building additions. A large steam load has been eliminated with the laundry and central kitchen equipment being taken off line.

D. A 12 inch steam header exits the central plant into the tunnel system where it reduces to a 10 inch supply to campus. The condensate piping returning from the buildings is either pumped or gravity fed in four (4) separate pipes and then collected into one 6” return in the branch tunnel entering into the central plant.

Branch Tunnel from Boiler Plant to Tunnel
Section A

E. The condition of the piping will be ranked in terms of severity and impact on the long term sustainability of the piping, expansion joints, hangers, traps, valves, anchors and guides. Ranking is as follows:

Good- No corrosion or damage observed.

Fair- Small corrosion, deterioration, or damaged observed on piping, expansion joints, hangers, traps, valves, anchors, and guides. Condition could result in a lower than original condition, but still usable.

Poor- Significant corrosion, deterioration, damage, and age observed on piping, expansion joints, hangers, traps, valves, anchors, and guides. Condition is compromising the integrity and capability of continued functionality.

Severe- Critical corrosion, deterioration, damage and age observed on piping, expansion joints, hangers, traps, valves, anchors, and guides. The items observed appear to be in or near failure and the ability of these items to continue in operation is not safe.

F. This section evaluates the existing steam and condensate return system as a whole to the campus as well as individual tunnel, trench, and direct burial sections.

3.2 Evaluation of Overall Steam System Integrity, Design and Performance:

A. Integrity:

1. The integrity of the overall steam and condensate piping and specialties has been compromised due to age, leaks, deterioration and recurring failures in the piping and specialties. The corrosive atmosphere within the tunnels is also contributing to the failures in the system.
2. The steam and condensate return system and specialties are generally in severe condition and in many locations failing.
3. The facilities personnel have managed and done a remarkable job in keeping steam supplied to the individual buildings; however as time passes, major failures are likely to occur which could shut all or significant portions of the heating system down.

B. Design:

1. The design of the steam and condensate system was industry standard at the time of construction. Steam piping from the new central boiler plant is routed in the tunnels, trenches, and direct buried to campus buildings. Steam pressures can vary from 70 to 100 psig.
2. The steam pressure within the equipment rooms of each campus building is reduced through a pressure reducing valve station to 30 psig or lower, depending on the requirements and usage of the building.
3. Condensate is returned back to the central boiler plant from the individual campus buildings by use of packaged receiver pump sets, or gravity fed. Four (4) separate condensate return lines are routed

either in the tunnels or direct buried and are combined at the central plant into one 6 inch main that is connected to two (2) pump traps. One of the condensate return lines is made of FRP and should have not been used in this type of application.

C. Performance:

1. The steam and condensate system still performs in providing heat for building comfort and heat media for heating the domestic hot water.
2. The overall performance of the existing steam and condensate system has been compromised. Piping leaks, equipment failures, and specialty component failures have rendered the system much less reliable, efficient, and safe.
3. The current system state is much more expensive to operate due to leaks, blown traps, severe insulation, and system inefficiencies.
4. Maintenance cost will steadily increase as the piping and specialties further age and begin to fail.

3.3 Evaluation of Steam and Condensate System Specialties

A. The steam and condensate system specialties evaluated in this section include the following:

1. Steam traps
2. Expansion joints
3. Anchors
4. Pipe guides
5. Hangers and supports
6. Condensate receivers and pump sets

B. Tunnel Section A:

1. Steam traps:

a. There is only one steam trap within tunnel section A, and is a bucket type trap.
b. The steam trap is past ASHRAE's recommended service life, not piped correctly, in severe condition, and requires replacement.

Bucket Steam Trap Tunnel Section A

2. Expansion joints:

    a. The expansion joints in tunnel section A are past ASHRAE's recommended service life, leaking, and in severe condition.
    b. Expansion joints require replacement and relocation depending on the results of a recommended new piping analysis study.

3. Anchors:

    a. The anchors in tunnel section A are part of the expansion joints. Anchors are in severe condition and require replacement.

Expansion Joint Tunnel Section A

Typical Anchor Tunnel Section A

4. Pipe guides:

    a. There are no pipe guides in tunnel section A.

5. Hangers and supports:

    a. Approximately 90 percent of the existing hangers and supports are in severe condition.
    b. Wall supports, clevis hangers, and single rollers are damaged, rusted and deteriorated to the point that they require replacement. The existing wall hangers are no longer manufactured.

6. Condensate receiver pump sets:

    a. There are no condensate receivers pump sets in tunnel section A.

C. Tunnel Section B:

1. Steam traps:

    a. The steam traps in tunnel section B are in severe condition. Traps are bucket type, past ASHRAE's recommended service life, not piped correctly, and require replacement. In two locations the traps have been removed and the piping capped.
    b. Trap stations are not piped as recommended by the manufacturer. Piping upstream of trap should contain a ball valve, strainer, and union in that order. Piping downstream of trap should contain union, check valve, and ball valve in that order. See Appendix for correct Trap Piping Detail.

2. Expansion joints:

    a. The expansion joints in tunnel section B are in severe condition. Expansion joints are leaking and are past ASHRAE's recommended service life.
    b. Expansion joints require replacement and relocation depending on the results of a recommended new piping analysis study.

3. Anchors:

    a. The anchors in tunnel section B are in severe condition. A number of anchors are pulling out of the tunnel wall. Some anchors are part of the expansion joint.

4. Pipe guides:

    a. There are no pipe guides in tunnel section B.

5. Hangers and supports:

    a. Approximately 90 percent of the existing hangers and supports are in severe condition.
    b. Wall supports, clevis hangers, and single rollers are damaged, rusted and deteriorated to the point that they require replacement. The existing wall hangers are no longer manufactured.

6. Condensate receiver pump sets:

    a. One condenser receiver pump set is located in tunnel section B. Packaged pump set is in severe condition.
    b. Receiver is rusted, pumps are leaking, and have been covered. Pump set is not functioning and needs to be removed. The need for replacement should be evaluated with a new piping system analysis.

Capped Steam Trap
Tunnel Section B

Anchor Tunnel Section B
Concrete Deterioration

Support and Rollers Corrosion
Tunnel Section B

Condensate Receiver Pump
Tunnel Section B

D. Tunnel Section C - West of Administration Building:

1. Steam traps:

   a. This section of tunnel is inaccessible. Due to access complications, no traps could be found or verified in tunnel section C west of the Administration Building.
   b. This tunnel is consistent in age to tunnel sections A and B so in comparison, if any original traps are in this section they will be past ASHRAE's recommended service life and in severe condition. Furthermore, due to access complications for maintenance, they are likely not performing well which increases energy costs and adversely affects performance.

2. Expansion joints:

   a. Due to access complications, no expansion joints could be found or verified in tunnel section C west of the Administration Building.

b. This tunnel is consistent in age to tunnel sections A and B so in comparison, if any original expansion joints are in this section they will be past ASHRAE's recommended service life and in severe condition. Expansion joints will require replacement and relocation depending on the results of a recommended new piping analysis study.

3. Anchors:

   a. Anchors were provided in tunnel section C west during the 1979-1980 new tunnel section C east addition. Due to access complications, no anchors could be verified in tunnel section C west.
   b. In comparison to tunnel section C east, anchors are rusted, in poor condition, and are 32 years old. New anchors should be provided and located per a recommended new pipe analysis study.

4. Pipe guides:

   a. Due to access complications, no pipe guides could be verified. Pipe guides should be located per a recommended new pipe analysis study.

5. Hangers and supports:

   a. Due to access complications, no hangers and supports could be verified.
   b. In comparison hangers and supports are old, rusted, deteriorating and in severe condition. Supports need to be replaced.

6. Condensate receiver pump set:

   a. There are no condensate receiver pump sets with-in tunnel section C west, however the condensate piping within this section of tunnel is fed from condensate receiver pump sets located in the Chiller Plant, the Administration Building, and Evergreen.

E. Tunnel Section C - East of Administration Building:

1. Steam traps:

   a. There is an end of main steam trap at the beginning of tunnel C east.
   b. Trap is a bucket type, past ASHRAE's recommended service life, in severe condition, not piped correctly and needs to be replaced.

2. Expansion joints:

a. There are two expansion joints (steam and condensate) in tunnel C east of the Administration Building.
b. Expansion joints are 32 years, past ASHRAE's recommended service life, in severe condition.
c. Expansion joints will require replacement and relocation depending on the results of a recommended new piping analysis study.

3. Anchors:

a. There are anchors located in tunnel section C east of the Administration Building.
b. Anchors are 32 years old, rusted, in poor condition, and in the wrong locations according to today's standards.
c. Anchors should be removed and replaced with new anchors in new locations approved by a new recommended piping analysis study.

4. Pipe guides:

a. There are two (2) pipe guides located upstream and two pipe guides located downstream of each expansion joint.
b. Due to the corrosive atmosphere in the tunnel, the guides have rusted and corroded and are in severe condition. Pipe guides are 32 years old and past ASHRAE's recommended service life.
c. Pipe guides need to be replaced and relocated as required by a new recommended piping analysis study.

5. Hangers and supports:

a. Pipe supports and hangers are steel unistrut, attached to the walls of the tunnel. Pipe hangers are made up of threaded rod attached to the roof of the tunnel and clevis type hangers located at the bottom end of the rods.
b. Approximately 10 percent of supports and hangers, due to the corrosive atmosphere in the tunnel, have rusted and corroded to the point that they are in poor to severe condition.
c. Hangers and supports in poor to severe condition need to be removed and replaced.

6. Condensate receiver pump set:

a. There are no condensate receiver pump sets with-in tunnel section C east of the Administration Building.

F. Tunnel Section D:

1. Steam traps:

a. The steam traps with-in this section of tunnel are bucket type, 32 years old, past ASHRAE's recommended service life and in poor to severe condition.
b. Steam traps are not piped correctly and need to be removed and replaced. See Appendix for correct Trap Piping Detail.

2. Expansion joints:

   a. Expansion joints are located on the steam and condensate piping.
   b. Expansion joints are 32 years old, past ASHRAE's recommended service life, and are in severe condition.
   c. Expansion joints will require replacement and relocation depending on the results of a recommended new piping analysis study.

3. Anchors:

   a. There are six (6) anchors locations in tunnel section D.
   b. Anchors are 32 years old, rusted, in poor condition and in the wrong locations according to today's standards.
   c. Anchors should be removed and replaced in new locations approved by a new recommended piping analysis study.

4. Pipe guides:

   a. There are two (2) pipe guides located upstream and two (2) located downstream of each expansion joint.
   b. Due to the corrosive atmosphere in the tunnel, the guides have rusted and corroded. Pipe guides are 32 years old, in poor condition, and are past ASHRAE's recommended service life.
   c. Pipe guides need to be replaced and relocated as required by a new recommended piping analysis study.

Pipe Guide Tunnel Section D

Pipe Support Corrosion
Tunnel Section D

5. Hangers and supports:

    a. Pipe supports are made up of steel unistrut, attached to the walls of the tunnel. Pipe hangers are made up of all threaded rod attached to the roof of the tunnel and clevis type hangers located at the bottom end of the rods.
    b. Approximately 50 percent of supports and hangers, due to the corrosive atmosphere in the tunnel, have rusted and corroded to the point that they are in severe condition and can no longer be trusted to support the loads.
    c. Hangers and supports in poor to severe condition need to be removed and replaced.

6. Condensate receiver pump set:

    a. There are no condensate receiver pump sets within tunnel section D. There is a condensate receiver and pump set with-in the chiller plant that feeds condensate return with-in this section of tunnel.

G. Tunnel Section E:

1. Steam traps:

    a. The steam traps with-in this section of tunnel are bucket type, 32 years old, past ASHRAE's recommended service life, and in poor to severe condition.
    b. Steam traps are not piped correctly. Traps need to be removed and replaced. See Appendix for correct Trap Piping Detail.

2. Expansion joints:

    a. Expansion joints are located for both steam and condensate piping in only one location on the west side. In lieu of expansion joints on the east side of tunnel section E there are ball joints.
    b. The expansion joints and ball joints are 32 years old, past ASHRAE's recommended service life, are rusted and corroded due to the tunnel atmosphere, and in poor to severe condition.
    c. Expansion joints need to be replaced. Ball joints need to be replaced with expansion joints. Expansion joints will require replacement and relocation depending on the results of a recommended new piping analysis study.

3. Anchors:

    a. There are five (5) anchor locations in tunnel section E.
    b. Anchors are 32 years old, rusted and in wrong locations according to today's standards.

c. Anchors should be removed and replaced in new locations approved by a new recommended piping analysis study.

4. Pipe guides:

   a. There are two (2) pipe guides located upstream and two (2) located downstream of each expansion joint.
   b. Due to the corrosive atmosphere in the tunnel, the guides have rusted and corroded and are in poor to severe condition. Pipe guides are 32 years old and past ASHRAE's recommended service life.
   c. Pipe guides need to be replaced as required by a new recommended piping analysis.

5. Pipe hangers and supports:

   a. Pipe supports are made up of steel unistrut, and attached to the walls of the tunnel. Pipe hangers are made up of all threaded rod attached to the roof of the tunnel and a clevis type hanger located at the bottom end of the rod.
   b. Approximately 60 percent of supports and hangers, due to the corrosive atmosphere in the tunnel, have rusted and corroded to the point that they are in severe condition and can no longer be trusted to support the loads.
   c. Hangers and supports in poor to severe condition need to be removed and replaced.

Hangers and Supports Tunnel Section E

Tunnel E Corrosive Atmosphere

6. Condensate receiver pump set:

   a. There are no condensate receiver pump sets within tunnel section E.

H. Tunnel Section F:

1. Steam traps:

a. There are no steam traps in tunnel section F.
b. There is a trap assembly located in the Auditorium building. Steam and condensate piping is routed to the Auditorium building via tunnel section F. Trap is a bucket type and in poor condition.

2. Expansion joints:

   a. Steam and condensate piping enters tunnel section F from the section of direct buried piping DB-4. Condensate only piping exits tunnel section F and into the section of direct buried DB-3.
   b. There are no expansion joints in tunnel section F.
   c. Expansion is provided in the direct buried piping sections DB-4 and DB-3, by using expansion loops.

3. Anchors:

   a. There are no anchors in tunnel section F.

4. Pipe guides:

   a. There are no pipe guides in tunnel section F.

5. Pipe hangers and supports:

   a. 100% of pipe hangers and supports are rusted, corroded, and in severe condition.
   b. All hangers and supports need to be removed and replaced.

Tunnel Section F Corrosive Environment

Condensate Receiver Pump Set And PRV Station Auditorium

6. Condensate receiver pump set:

    a. There are no condensate receiver pump sets in tunnel section F.
    b. The receiver pump set located in the Auditorium is in severe condition, not working, and requires replacing.

I. Direct Buried Section DB-1:

This Section of direct buried piping could be nearly 80 years old and would be way beyond ASHRAE's recommended service life. Field verification was not possible as the piping is direct buried. Record drawing research and facility personnel interviews were conducted to complete the analysis of direct buried piping sections.

1. Steam traps:

    a. Existing record drawings do not indicate any traps except within the laundry / facilities building.

2. Expansion joints or loops:

    a. Existing record drawings indicate two (2) expansion loops. Could not verify.

3. Anchors:

    a. Could not verify location or condition of any anchors. Due to the age of this section however, if there are anchors, they would be past ASHRAE's recommended service life and would need to be replaced.

4. Pipe guides:

    a. Could not verify location or existence of any pipe guides. If pipe guides are in this piping, they would be past ASHRAE's recommended service life and would need to be replaced.

5. Condensate receiver pump set:

    a. The condensate receiver pump set is located in the laundry/ facilities buildings.
    b. Condensate receiver pump set is in poor condition and should be replaced.

J. Direct Buried Section DB-2:

This Section of direct buried piping could be nearly 80 years old and would be way beyond ASHRAE's recommended service life. One age exception is the branch piping section from the main north south DB-2 run

to the Maintenance building, was removed and replaced in 2012. Field verification was not possible as the piping is direct buried. Record drawing research and facility personnel interviews were conducted to complete the analysis of direct buried piping sections.

1. Steam traps:

    a. Could not verify the existence of any steam traps in this section of direct buried piping.
    b. There are traps in the maintenance shops. Traps are not as old as the system, but are still beyond ASHRAE's recommended service life.

2. Expansion joints or loops:

    a. In a section of direct buried piping there should be expansion joints or loops but could not verify location or condition.
    b. If buried expansion joints are in this piping they would be, due the age of the piping, in very severe condition and past ASHRAE's recommended service life.
    c. They would need to be located and replaced.

3. Anchors:

    a. Could not verify location or condition of any anchors. Due to age of this section however, if there are anchors, they would be past ASHRAE's recommended service life and would need to be replaced.

4. Pipe guides:

    a. Could not verify location, condition or existence of any pipe guides. If pipe guides are in this piping, they would be past Asharae's recommended service life and would need to be replaced.

5. Condensate receiver pump set:

    a. There are no condensate receiver pump sets in this section of direct buried piping.

K. Direct Buried Section DB-3:

This section of direct buried piping is 15 years old. Field verification was not possible as the piping is direct buried. Record drawing research and facility personnel interviews were conducted to complete the analysis of direct buried piping sections. Only condensate piping is routed in section DB-3.

1. Expansion joints or loops:

    a. Existing record drawings do not indicate any expansion joints or loops.

2. Anchors:

    a. Could not verify location or condition of any anchors.

3. Condensate receiver pump set:

    a. There are no condensate receiver pump sets located in section DB3.

L. Direct Buried Section DB-4:

This section of direct buried piping could be as much as 40 years old for the steam piping and any steam piping and specialties would be way beyond ASHRAE's recommended service life. The condensate piping was replaced in 2000. Field verification was not possible as the piping is direct buried. Record drawing research and facility personnel interviews were conducted to complete the analysis of direct buried piping sections.

1. Steam traps:

    a. There are no steam traps unless there is one located in the man hole. Could not verify because of steam leak.
    b. There are steam traps in Comp Therapy and Laurelwood. The trap in Comp Therapy is in good condition. The trap assembly in Laurelwood is leaking and in severe condition.

2. Expansion joints or loops:

    a. Could not verify number of expansion joints.
    b. The one expansion joint that was verified is located in the man hole south of the take-off to Comp Therapy building.
    c. This expansion joint is in severe condition, leaking, and past ASHRAE's recommended service life.
    d. Expansion joint will require replacement and relocation depending on the results of a recommended new piping analysis study.
    e. If there are other expansion joints in this section DB-4 they also need to be replaced.

3. Anchors:

    a. Could not verify location or condition of any anchors.
    b. Due to the age of this section however, if there are anchors, they would be past ASHRAE's recommended service life and would need to be replaced.

4. Condensate receiver pump set:

    a. There are no condensate receiver pump sets located in section DB-4.
    b. The condensate receiver pump set that feeds into this section of direct buried piping is located in the mechanical room of Comp Therapy and is in good condition.

M. Direct Buried Section DB-5:

This section of direct buried piping from Pineridge to across the 900 North Street is 51 years old. The piping just south of 900 North Street all the way to the new boiler plant was installed in 2010.

1. Expansion joints or loops:

    a. Could not verify if any expansion joints are located in the old section of piping.
    b. If any are installed they should be removed and replaced. They would be past ASHRAE's recommended service life.
    c. The expansion loop in the new section of piping should be in good condition since it is only two (2) years old.

2. Anchors:

    a. Could not verify location or condition of any anchors in the older piping.
    b. Due to the age of this section however, if any anchors exist, they would be past ASHRAE's recommended service life and would need to be replaced.
    c. Anchors located in the new section of piping are two (2) years old and should be in good condition.

3. Pipe guides:

    a. Could not verify location or condition of any pipe guides in the older piping.
    b. Due to the age of the piping any pipe guides would be past ASHRAE's recommended service life and would need to be replaced.
    c. The pipe guides in the new section of piping are two (2) years old and should be in good condition.

4. Condensate receiver pump set:

    a. There are no condensate receiver pump sets located in section DB-5 however, the condensate receiver pump set supplying this section of direct buried piping is located in the under floor mechanical room of Pineridge.
    b. The receiver pump set is past ASHRAE's recommended service life, in severe condition, and needs to be replaced.

N. Trench Section TR-1:

Trench section TR-1 services the Woodland, Warehouse, Rose and Heather Buildings. In 2011 the steam and condensate piping was replaced and should be in good condition. Trench was outfitted with a metal roof and covered with asphalt during the 2011 piping replacement project. Field verification was not possible as the piping is in trenches with no removable access. Record drawing research and facility personnel interviews were conducted to complete the analysis of Trench piping sections.

1. Steam traps:

    a. Could not verify if traps are installed in trench section TR-1.

2. Expansion joints or loops:

    a. Could not verify if expansion joints or loops are installed in trench TR-1.

3. Anchors:

    a. Could not verify if anchors are installed in trench section TR1.

4. Pipe guides:

    a. Could not verify if pipe guides are installed in trench section TR-1.

5. Piping Supports:

    a. Could not verify the locations or condition of pipe supports in trench section TR-1.
    b. Due to the fact that this section of piping was replaced in 2011, it is assumed that the pipe supports are in good condition.

6. Condensate receiver pump set:

    a. There are no condensate receiver pump sets in trench TR-1.
    b. Trench section TR-1 services the Woodland, Warehouse, Rose and Heather Buildings. These buildings have condensate receiver pump sets that are all in severe condition and require replacing.
    c. The receiver tank in Rose has completely flooded the basement floor and the exterior concrete landing at the bottom of the stairs.

Leaking and Flooded Condensate Receiver Pump Set Rose Building

Leaking Condensate Receiver Pump Set Heather Building

O. Trench Section TR-2:

Trench section TR-2 services the Central Kitchen Building and Mountain View or TLC Building. TR-2 serving the Central Kitchen is 48 years old, and is 28 years old serving the TLC Building. Field verification was not possible as the piping is in trenches with no removable access. Record drawing research and facility personnel interviews were conducted to complete the analysis of Trench piping sections.

1. Steam traps:

    a. Could not verify if traps are installed in trench section TR-2.
    b. If traps are installed they would be past ASHRAE's recommended service life.
    c. Traps would be in poor to severe condition along with the supporting piping, strainers and valves. Steam traps would require replacing.

2. Expansion joints:

    a. Could not verify if expansion joints or loops are installed in trench TR-2.
    b. If expansion joints are installed they would be past ASHRAE's recommended service life.
    c. Expansion joints would be in poor condition and would need replacing.

3. Anchors:

    a. Could not verify if anchors are installed in trench section TR2.
    b. If anchors are installed, they would be in poor to severe condition due to age and deterioration.
    c. Anchors would need replacing.

4. Pipe guides:

    a. Could not verify if pipe guides are installed in trench section TR-2.
    b. If pipe guides are installed in section TR-2 they would be past ASHRAE's recommended service life.
    c. Pipe guides would be in poor to severe condition due to age and deterioration of the guides and would require replacing.

5. Piping supports:

    a. Could not verify the locations or condition of pipe supports in trench section TR-2.
    b. Piping supports would be in poor to severe condition due to age, rust and deterioration of the supports and would require replacing.

6. Condensate receiver pump set:

    a. There are no condensate receiver pump sets in trench TR-2.
    b. Trench section TR-2 services the Central Kitchen Building and Mountain View on TLC Building.
    c. These buildings have condensate receiver pump sets that are all in poor to severe condition, leaking, and require replacing.

P. Trench Section TR-3:

Trench section TR-3 services the Family Services Building is approximately 46 years old. Field verification was not possible as the piping is in trenches with no removable access. Record drawing research and facility personnel interviews were conducted to complete the analysis of Trench piping sections.

1. Steam traps:

    a. Could not verify if traps are installed in trench section TR-3.
    b. If traps are installed they would be past ASHRAE's recommended service life.
    c. Traps would be in poor to severe condition along with the supporting piping, strainers and valves. Steam traps would require replacing.

2. Expansion joints or loops:

    a. Could not verify if expansion joints or loops are installed in trench TR-3.
    b. If expansion joints are installed they would be past ASHRAE's recommended service life.

c. Expansion joints would be in poor condition and would need replacing.

3. Anchors:

   a. Could not verify if anchors are installed in trench section TR-3. If anchors are installed, they would be in poor to severe condition due to age and deterioration.
   b. Anchors would need replacing.

4. Pipe guides:

   a. Could not verify if pipe guides are installed in trench section TR-3. If pipe guides are installed in section TR-3 they would be past ASHRAE's recommended service life.
   b. Pipe guides would be in poor to severe condition due to age and deterioration of the guides and would require replacing.

5. Pipe supports:

   a. Could not verify the locations or condition of pipe supports in trench section TR-3.
   b. Piping supports would be in poor to severe condition due to age, rust and deterioration of the supports and would require replacing.

6. Condensate receiver pump set:

   a. There are no condensate receiver pump sets in trench TR-3.
   b. Trench section TR-3 services the Family Services Building. There is a condensate receiver pump set in this building. That is in severe condition and requires replacing.

3.4 Evaluation of Condition of Steam and Condensate Piping

A. Tunnel Section A:

1. The main 12 inch steam main from the boiler room floor east to the main north and south tunnel is two (2) years old and in good condition.
2. The main 6 inch condensate return piping from the boiler room floor east to where four condensate return lines are combined into the main 6 inch piping is two (2) years old and in good condition.
3. The 10 inch steam main from the 12"x10" reducing 90 deg. elbow northward to the end of tunnel section A is 79 years old, past ASHRAE's recommended service life and in poor to severe condition.
4. The steam piping in tunnel section A is in spot failure and requires replacing.
5. The condensate return piping in tunnel A consists of four (4) individual gravity or pumped lines. This piping is beyond ASHRAE's recommended service life and is in spot failures. One of the

condensate returns is made from FRP piping which is normally not used in this situation. This return piping needs to be replaced using a new one pipe condensate return design, with a possible dedicated trap discharge line depending on a new piping system analysis.

Condensate Return Piping
Tunnel Section A

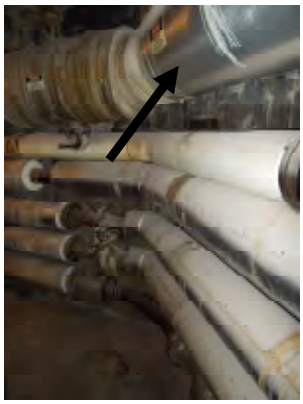

10" Steam Piping Tunnel
Section A

B. Tunnel Section B:

1. The steam piping in tunnel section B is the same age and condition as the old piping in tunnel section A (79 years) and requires replacing.
2. Spot failures are already occurring creating a very dangerous condition in this section of tunnel.
3. The condensate return piping is in four (4) individual return lines and is the same age and condition (poor to severe) as return piping in tunnel section A and requires replacing.
4. Spot failures are already occurring creating a dangerous condition in this section of tunnel.

Condensate Return Piping
Tunnel Section B

10" Steam Piping
Tunnel Section B

C. Tunnel Section C - West of Administration Building:

1. Steam piping located in tunnel section C west of the administration building is 56 years old and past ASHRAE's recommended service.
2. Steam piping is in poor condition and requires replacing.
3. Condensate return piping consists of one pumped and one gravity line. Piping is past ASHRAE's recommended service life, in poor to severe condtion, and requires replacing.

D. Tunnel Section C - East of Administration Building:

1. Steam piping located in tunnel section C east of the administration is 32 years old and in poor condition. Steam piping requires replacing.
2. Condensate return piping consists of one pumped line. Condensate piping is 32 years old, past ASHRAE's recommended service life, in poor to severe condition, and requires replacing.

E. Tunnel Section D:

1. Steam piping located in tunnel section D ranges from 10" to 6" and all steam piping is 32 years old and the same condition as tunnel section C.

2. Steam piping, due to the corrosive atmosphere within the tunnel, is deterioration, in poor to severe condition, and requires replacing.
3. Condensate return piping within this section of tunnel consists of both pumped and gravity fed. The gravity return flows to a common condensate receiver pump set located in the central chiller plant. From the condensate receiver and pump set the condensate is pumped back to the central boiler plant.
4. Condensate piping is 32 years old, past ASHRAE's recommended service life, in poor to severe condition, and requires replacing.

F. Tunnel Section E:

1. The steam piping located in tunnel section E is the same condition as steam piping found in tunnel section D.
2. Steam piping, due to the corrosive atmosphere within the tunnel, is deterioration, in poor to severe condition, and requires replacing.
3. Condensate return piping within this section of tunnel consists of both pumped and gravity fed. The gravity return flows to a common condensate receiver pump set located in the central chiller plant. From the condensate receiver and pump set the condensate is pumped back to the central boiler plant.
4. Condensate piping is 32 years old, past ASHRAE's recommended service life, in poor to severe condition, and requires replacing.

G. Tunnel Section F:

1. The steam piping located in tunnel section F is 40 years old, and in severe condition.

2. Steam piping, due to the corrosive atmosphere within the tunnel, is deterioration, in poor to severe condition, and requires replacing.
3. Condensate return piping within this section is 15 years old but is deteriorating due to leaks and atmospheric condition of the tunnel. Even though the piping is only 15 years old, it should be replaced due to severe condition.

H. Direct Buried Section DB-1:

1. Steam piping in this section of tunnel is 29 years old. Due to age, being direct buried, and being past ASHRAE's recommended service life the steam piping requires replacing.
2. The condensate return piping in section DB-1 is in the same time period as the steam piping and past ASHRAE's recommended service life. Due to age and being buried, this section of condensate return piping requires replacing.

I. Direct Buried Section DB-2:

1. This section of direct buried steam pipe services the Maintenance shop and the Green House. DB-2 then continues and connects into trench section TR-1 that serves Woodland, Warehouse, Rose and Heather. The steam piping is between 43 and 75 years old depending on the location.
2. The branch section to the maintenance shops, across the road to the main DB-2 north south run, was replaced during the fall of 2012.
3. The steam piping in section DB-2 is past ASHRAE's recommended service life, in severe condition (assumption due to age and being buried) and requires replacing. Spot failures could occur at any time.
4. The condensate return piping in this section DB-2 is pumped back to the Central Boiler Plant and is the same age as the steam piping.
5. Condensate piping is past ASHRAE's recommended service life, in severe condition (assumption due to age and being buried) and requires replacing. Spot failures could occur at any time.

J. Direct Buried Section DB-3:

1. There is no direct buried steam piping in direct buried section DB-3.
2. One direct buried 3 inch condensate return line is routed from the corner of tunnel F across the grass field to tunnel section A.
3. Condensate return piping in this section services Laurelwood, Tulip, Family Services and Auditorium.
4. In comparison to the severe condition of the piping within tunnel section F, we can only assume that the direct buried pipe is also in severe condition. The piping is past ASHRAE's recommended service life and requires replacing.

K. Direct Buried Section DB-4:

1. The steam piping in DB-4 services Comp. Therapy, Laurelwood, Tulip, Family Services and the Auditorium. The piping is between 30

and 40 years old, leaking, and in severe condition. Piping is past ASHRAE's recommended service life and requires replacing.

2. The condensate return piping in DB-4 also services the buildings noted for steam. Piping is between 30 and 60 years old, leaking, and in severe condition. Piping is past ASHRAE's recommended service life and requires replacing.

L. Direct Buried Section DB-5:

1. The steam piping located south of 900 North Street serving Pine Ridge was installed in 2010 and should be in good condition.
2. The steam piping located from the new tie-in south of the 900 North Street northward under the roadway to Pine Ridge is 51 years old and past ASHRAE's recommended service life and assumed to be in severe condition due to age and being direct buried. Steam piping requires replacing.
3. The condensate return piping located south of the 900 North Street serving Pine ridge was installed in 2010 and should be in good condition.
4. The condensate piping located from the new tie-in northward under 900 North Street and to Pine Ridge is 51 years old, past ASHRAE's recommended service life and assumed to be in severe condition due to age and being direct buried. This piping requires replacing.
5. Condensate return piping is a pumped system.

M. Trench Section TR-1:

1. Steam piping in trench section TR-1 services Heather, Rose, Warehouse and Woodland. Steam piping was replaced in 2011 and is assumed to be in good condition.

2. The condensate piping in trench section TR-1 is pumped from the buildings noted in steam piping above. Condensate piping is a pumped system, was replaced in 2011, and assumed to be in good condition.

N. Trench Section TR-2:

1. The steam piping in trench section TR-2 services the TLC/ Mountain View and Central Kitchen Buildings. The steam piping is between 45 and 48 years old, past ASHRAE's recommended service life and assumed to be in severe condition due to age and conditions within the trench and requires replacing.
2. The condensate return piping in trench section TR-2 serves the TLC/ Mountain View and Central Kitchen Buildings. The condensate return piping is a pumped system and past ASHRAE's recommended service life and assumed to be in severe condition due to age and condition within the trench and requires replacing.

O. Trench Section TR-3:

1. The steam piping in trench section TR-3 services the Family Services Building. The system piping is 46 years old, past ASHRAE's recommended service life and assumed to be in severe condition due to age and conditions within the trench and requires replacing.
2. The condensate return piping in trench section TR-3 serves the Family Service Building. The condensate return piping is a pumped system and past ASHRAE's recommended service life and assumed to be in severe condition due to age and conditions within the trench and requires replacing.

3.5 Evaluation of Isolation Valve Locations and Conditions

A. Tunnel Section A:

1. A 12 inch gate valve is provided in the steam piping in the branch tunnel between the central boiler room floor and the north, south tunnel section A. Valve was installed in 2010 and should be in good condition. This is the only isolation valve on the main steam line located in tunnel section A.
2. Where direct buried steam piping in section DB-1 connects into the tunnel section A inside the tunnel, an isolation gate valve is provided to isolate section DB-1 steam piping to Laundry/ Physical Facilities building. Gate valve is old, past ASHRAE's recommended service life and may not provide a tight seal on shut-off. This would allow steam to flow through the valve causing a dangerous condition downstream of the valve. Gate valve requires replacing.
3. All four of the condensate return pipes are equipped with 300# flanged gate valves located in the branch tunnel between the Central Boiler room floor and the main north south tunnel. All valves were installed in 2010 and are in good condition.

4. An isolation gate valve is provided for the condensate return piping from Pine Ridge. This valve is located in the tunnel section A north south tunnel, on the south end. Valve was installed in 2010 and is in good condition.

B. Tunnel Section B:

1. There are isolation gate valves located in the steam piping at the tunnel cross serving Vocational Shops and Recreation Buildings. These valves are past ASHRAE's recommended service life, and may not provide a tight seal on shut-off. This would allow steam to flow through the valve, causing a dangerous condition downstream of the valve. Gate valves require replacing.
2. At the end of tunnel section B, an isolation gate valve is installed on the steam line to trench section TR-2. This valve shuts-off steam services to the central kitchen and the TLC or Mountain View Building. This valve is past ASHRAE's recommended service life, and may not provide a tight seal on shut-off. This would allow steam to flow

through the valve creating a dangerous condition downstream of the valve. Valve requires replacing.

3. The condensate return valves are gate valves and in the same location as the steam valves noted in 1 and 2 above. These valves also require replacing due to age and potential danger of not providing a tight seal during shut-off.

C. Tunnel Section C - West of Administration Building:

1. Due to access complications, could not verify any steam isolation valves in this section of tunnel.
2. Due to access complications, could not verify any condensate return valves in this section of tunnel.
3. Accessible steam and condensate valves should be provided for maintenance and safety.

D. Tunnel section C - East of Administration Building:

1. Verified one steam isolation gate valve in the branch line to the Administration Building. This valve is 32 years old and may not have a tight seal on shut-off. This valve requires replacing due to age and potential danger downstream of valve if valve cannot provide a tight seal.
2. Could not verify any condensate isolation valves except for the new pump valves located in the mechanical room of the Administration Building. These valves were installed during the 2012 mechanical room renovation and are in good condition.

E. Tunnel Section D:

1. Could not verify any steam isolation valves within tunnel section D. Accessible steam and condensate valves should be provided for maintenance and safety.
2. There are however, isolation valves located at the entrances to Cottonwood, Pleasant View, Aspen Hills, Chiller Plant and Rain Tree. These valves are gate valves and on average 30 years old.
3. At this age the valves are past ASHRAE's recommended service life, in poor condition and may not have a tight seal allowing steam to flow through the valves causing a dangerous hazard downstream of the valves. Valves require replacing.
4. Could not verify within tunnel section D isolation valves for the condensate return piping. There are valves within the mechanical equipment rooms but are not located at the branch tunnel connections to the buildings.
5. Condensate valves are past ASHRAE's recommended service life, in poor condition and require replacing. Valves may no longer provide a tight seal when shut-off.

F. Tunnel Section E:

1. Could not verify any steam isolation valves in tunnel section E. Accessible steam and condensate valves should be provided for maintenance and safety.
2. There are however, isolation gate valves located in the mechanical rooms entrances of Willow Creek, Oak Ridge, Quail Run and Sunset. These valves are gate valves and on average 32 year old.
3. At this age, these valves are past ASHRAE's recommended service life, in poor condition, and may no longer provide a tight seal when shut-off. These valves require replacing.
4. Could not verify any condensate return isolation valves in tunnel section E. There are however, condensate valves within the mechanical rooms of Willow Creek, Oak Ridge, Quail Run and Sunset. These valves are gate valves and are on average 32 years old.
5. Valves are past ASHRAE's recommended service life, in poor to severe condition and may no longer provide a tight seal when shut-off. These valves require replacing.

G. Tunnel Section F:

1. Could not verify any steam isolation valves in the tunnel section F. There is however, an isolation gate valve in the mechanical room at the end of the branch tunnel serving the Auditorium. Valve is 40 years old, in poor to severe condition and past ASHRAE's recommended service life. Valve may no longer provide a tight seal when shut-off causing steam to flow through the valve. This creates a dangerous hazard downstream of the valve. Valve requires replacing.
2. Could not verify any condensate return isolation valves in tunnel section F. There is however an isolation gate valve in the mechanical room at the end of the branch tunnel serving the Auditorium. Valve is 40 years old, in poor condition and past ASHRAE's recommended service life. Valve may no longer provide a tight seal when shut-off. This valve requires replacing.

H. Direct Buried Section DB-1:

1. There is a steam isolation gate valve inside the maintenance/ laundry building equipment room but no valve is installed in the tunnel section A take-off. The gate valve is 32 years old, Past ASHRAE's recommended service life, in poor condition and may no longer provide a tight seal when valve is closed. This situation would allow steam to flow through the valve creating a dangerous situation downstream of the valve. This valve requires replacing.
2. There is no condensate isolation valve in section DB-1 or at tunnel section A take-off. A condensate isolation gate valve is found at the entrance to the equipment room of the maintenance/ laundry building. Condensate valve is 32 years old, in poor condition and past ASHRAE's recommended service life. The valve may no longer

provide a tight seal when valve is closed. The valve requires replacing.

I. Direct Buried Section DB-2:

1. There is a steam isolation gate valve inside the maintenance/ shops building, but no valve is installed at the tunnel section B take-off. The gate valve is 59 years old, Past ASHRAE's recommended service life, in poor condition and may no longer provide a tight seal when valve is closed. This situation would allow steam to flow through the valve creating a dangerous situation downstream of the valve. This valve requires replacing.
2. There is no condensate isolation valve in section DB-2 or at the tunnel section B take-off. A condensate isolation gate valve is found at the entrance to the maintenance/ shops building. Condensate valve is 59 years old, in poor condition and past ASHRAE's recommended service life. The valve may no longer provide a tight seal when valve is closed. The valve requires replacing.

J. Direct Buried Section DB-3:

1. There is no steam piping in section DB-3.
2. There is no condensate isolation valve in section DB-4 or in tunnel section F take-off. Accessible condensate valves should be provided for maintenance and safety.

K. Direct Buried Section DB-4:

1. Could not verify if there were any steam isolation valves in section BD-4. If there are any isolation valves in the direct burial section they would be between 51 and 75 years old, Past ASHRAE's recommended service life, in poor condition and may no longer provide a tight seal when valve is closed. This situation would allow steam to flow through the valve creating a dangerous situation downstream of the valve. There is an isolation gate valve in both Tulip (75 years old) and Laural Wood (51 years old) located within the mechanical equipment rooms. These valves require replacing.
2. Could not verify if there were any condensate isolation valves in section DB-4. If there are any condensate isolation valves in the direct buried section, they would be between 51 and 57 years old, in poor condition and past ASHRAE's recommended service life. The valve may no longer provide a tight seal when valve is closed. The valves would require replacing if present.

L. Direct Buried Section DB-5:

1. There is a steam isolation gate valve inside the Pine Ridge building equipment room and one isolation valve is installed within tunnel section A at the central boiler plant. The gate valve at Pine Ridge is 45 years old, past ASHRAE's recommended service life, in poor condition and may no longer provide a tight seal when valve is closed.

This situation would allow steam to flow through the valve creating a dangerous situation downstream of the valve. This valve requires replacing. The steam isolation gate valve located in tunnel section A was installed in 2010 and is in good condition.

2. A condensate isolation gate valve is found at the entrance to the equipment room at the Pine Ridge building. Condensate valve is 51 years old, in poor condition and past ASHRAE's recommended service life. The valve may no longer provide a tight seal when valve is closed. The valve requires replacing. The other condensate isolation valve is located in tunnel section A at the central boiler plant. Isolation gate valve was installed in 2010 and is in good condition.

M. Trench Section TR-1:

1. There are no steam isolation gate valves within trench section TR-1. There are isolation gate valves in each steam supply entrance into buildings Woodland, Warehouse, Rose, and Heather.
2. The steam gate valves serving Woodland, Warehouse, and Heather are 45 years old. The gate valve serving rose is 75 years old. The steam gate valves are past ASHRAE's recommended service life, in poor condition and may no longer provide a tight seal when valve is closed. This situation would allow steam to flow through the valve creating a dangerous situation downstream of the valve. These valves require replacing.
3. There are no condensate isolation valves within trench section TR-1. Condensate isolation gate valves are found at each of the entrances to buildings Woodland, Warehouse, Rose, and Heather.
4. The condensate gate valves serving Woodland, Warehouse, and Heather are 45 years old. The gate valve serving rose is 75 years old. The condensate gate valves and are in poor condition, and past ASHRAE's recommended service life. The valves may no longer provide a tight seal when valves are closed. The valves require replacing.

Woodland Gate Valve

Central Kitchen
Gate Valve

N. Trench Section TR-2:

1. There are no steam isolation gate valves within trench section TR-2. There are isolation gate valves located at the steam entrances to buildings Mountain View (TLC) and the Central Kitchen. The gate valves are 45 years old serving Mt. View and 48 years old serving the Central Kitchen, past ASHRAE's recommended service life, in poor condition and may no longer provide a tight seal when valves are closed. This situation would allow steam to flow through the valves creating a dangerous situation downstream of the valve. These valves require replacing.
2. There are no condensate isolation valves within trench section TR-2. Condensate isolation gate valve are found at the entrance to the equipment rooms of the Mountain View (TLC)and the Central Kitchen Buildings. Condensate valves are between 45 years old serving Mr. View and 48 years old serving the Central Kitchen, in poor condition and past ASHRAE's recommended service life. The valves may no longer provide a tight seal when valves are closed. The valves require replacing.

O. Trench Section TR-3:

1. There are no steam isolation gate valves within trench section TR-3. There is an isolation gate valve located at the steam entrance to the Family Services Building. The gate valve is 46 years old, past ASHRAE's recommended service life, in poor condition and may no longer provide a tight seal when valve is closed. This situation would allow steam to flow through the valve creating a dangerous situation downstream of the valve. This valve requires replacing.
2. There is no condensate isolation valve within trench section TR-3 or in tunnel section A take-off. A condensate isolation gate valve is found at the entrance to the equipment room of the Family Services Building. Condensate valve is 46 years old, in poor condition and past ASHRAE's recommended service life. The valve may no longer provide a tight seal when valve is closed. The valve requires replacing.

3.6 Evaluation of Piping Insulation and Equipment Jackets

A. Tunnel Piping Insulation:

1. The current general state of piping insulation condition throughout the tunnel system is in severe condition and should be replaced after tunnel and tunnel piping upgrades.
2. Poor atmospheric conditions, tunnel leaks, and age of insulation within the tunnel system have severely deteriorated the piping insulation.
3. Many locations are absent of any piping insulation.
4. Poor conditioned insulation, or no insulation, is causing the system to lose large amounts of heating and cooling energy equaling a very inefficient system. This inefficiency is causing the boilers and chillers

to work harder in order to make up for the energy lost at the piping surface. This creates a much higher cost to operate the equipment.

5. In tunnel sections A and B, some of the piping is marked to contain asbestos. Asbestos could also possibly be found in the inaccessible trenches. Locations should be verified and identified by a qualified asbestos inspector, and abated by a qualified asbestos contractor. Asbestos identification was not in the scope of this report. Please see the separate hazardous materials report previously performed.
6. Upon completion of mitigating piping replacements and tunnel atmospheric conditions, new fiberglass insulation complete with jacketing should be provided for all tunnel steam, condensate, and chilled water piping.
7. The thickness of the piping insulation should meet the latest edition requirements of the energy code.

Tunnel Piping Insulation Deterioration
Typical

Tunnel Piping Insulation Deterioration
Typical

B. Direct Buried Piping Insulation:

1. Due to the inaccessible nature of the direct buried portions of piping, insulation condition could not be visibly verified.
2. In comparison to the age of installation and comparison to adjacent tunnel sections, most of the direct buried piping insulation will be in severe condition. The exception would be the sections of direct buried piping replaced in recent years, however it is unknown what insulation technique was used during the renovation.
3. Poor insulating conditions were observed from the surface as the snow was visibly melting on direct buried paths.
4. Direct buried insulation practices on the older sections of piping have become obsolete and inferior to today's modern more efficient techniques.
5. If direct buried piping is removed and replaced, piping should be insulated by encasing the piping in Gilsulate 500 insulation.

C. Trench Piping Insulation:

1. Due to the inaccessible nature of the trench portions of piping, insulation condition could not be visibly verified. Where trench piping enters buildings, small visibility of the insulation was possible and was found to be in severe condition.
2. In comparison to the age of installation and comparison to adjacent tunnel sections, most of the trench piping insulation will be in severe condition. The exception would be the trench section TR-1 piping insulation replaced in recent years, however it is unknown what insulation technique was used during the renovation.
3. Poor insulating conditions were observed from the surface as the snow was visibly melting on trench paths.
4. If the top of the trench is removed and new piping installed, the new insulation should be fiberglass with a metal jacket.
5. Insulation thickness should meet current energy code.

D. Equipment Insulation Jacketing:

1. Isolation valves located within the tunnel system or inside building mechanical rooms where found to be absent of correct removable insulation jackets.
2. Expansion joints within the tunnel system where found to be absent of correct removable insulation jackets.
3. This is causing the system to lose large amounts of heating and cooling energy equaling a very inefficient system.

3.7 Identification of Crucial Steam System Inadequacies and Potential Failures

A. Steam Traps:

1. Steam traps throughout the campus steam distribution system are past ASHRAE's recommended service life, in severe condition and some have been taken out of service, piping capped and not replaced.
2. Steam traps have failed due to age and condition, and will continue to fail in the future.
3. Failed or inadequate traps can result in higher energy costs, failures in steam and condensate piping systems, and steam blowing through the trap pressurizing the condensate piping.
4. Steam traps need to be replaced but only after a total campus piping analysis is performed.
5. New thermodynamic traps should be used in piping located in the tunnels. They are the recommended traps for steam distribution systems.

B. System Expansion:

1. Expansion Joints:

a. The expansion joints throughout the campus steam distribution system are all past ASHRAE's recommended service life, in severe condition, and need to be replaced.

b. Expansion joints may not be providing adequate system expansion. This condition could cause major forces to be applied to all system components, resulting in potential domino failures.
c. Expansion joints need to be replaced; however a total campus piping analysis, in-line with modern standards, should be performed before any replacements. If direct buried, expansion loops should be used to accommodate thermal stresses and expansion.

2. Pipe Guides:

a. The only pipe guides in the tunnel and direct buried system are found in tunnel sections D and E and in sections DB-4 and DB-5. The pipe guides in tunnel sections D and E are 32 years old, past ASHRAE's recommended service life, located in a corrosive atmosphere, and are in severe condition.
b. The DB-4 steam guides are 48 years old, past ASHRAE's recommended service life, and due to inaccessibility, assumed to be in severe condition. The condensate guides should be in fair condition due to their replacement in 2000, but could not verify.
c. The DB-5 guides are only two (2) years old and should be in good condition.
d. All expansion joints should include pipe guides, as expansion joints will not function properly in their absence.
e. Failure of pipe guides could cause improper pipe alignment to expansion joint and place extreme pressure and stress on pipes and components, resulting in potential domino failures.
f. Pipe guides need to be replaced; however a total campus piping analysis, in-line with modern standards, should be performed before any replacements.

3. Pipe Anchors:

a. The existing piping anchors in tunnel sections A, B and C west are old, corroded, and in severe condition. The anchors are pulling out of the tunnel wall where concrete is deteriorating.
b. The pipe anchors in tunnel sections D and E are 32 years old and located in a corrosive atmosphere, resulting of corrosion and deterioration of the steel.
c. Failure of pipe anchors could cause pipe to contort with improper alignment to expansion joint and place extreme pressure and stress on pipes and components, resulting in potential domino failures.
d. Pipe anchors need to be replaced; however a total campus piping analysis, in-line with modern standards, should be performed before any replacements.
e. Tunnel structure and concrete failures would also need to be addressed to adequately support anchor systems. An anchor is only as good as the object it is attached to.

C. Piping hangers and supports:

1. A large majority of tunnel system pipe hangers and wall supports are in poor to severe condition and need to be replaced. They are rusted and corroded, due to the corrosive atmosphere of the tunnel, to the point that they can no longer be trusted to support the weight of the piping.
2. Integrity of tunnel structural systems could also cause supports to break free from deteriorating concrete walls and roofs.
3. Pipe supports are not currently providing any seismic measures.
4. Failure of pipe hangers could cause loss of piping support causing pipes to break and sheer from system.
5. Pipe supports need to be replaced; however a total campus piping analysis, in-line with modern seismic standards, should be performed before any replacements.
6. Tunnel structure and concrete failures would also need to be addressed to adequately support pipe hanger systems.

D. Condensate Receiver Pump Sets

1. The existing condensate receiver pump sets located in buildings throughout the campus, excluding the pumps located in the Administration and Comp Therapy buildings, are old, past ASHRAE's recommended service life, leaking, rusting and in poor to severe condition and need to be replaced. The receiver and pump set located in Rose needs immediate replacement.
2. Failure of condensate receiver pumps causes improper condensate return; this results in condensate being wasted, system inefficiencies, system flashing, and more make-up water required equaling money wasted.
3. If new tunnels are approved, the design of the new steam and condensate distribution system would change. Electric or steam driven pumps would be located in every building and condensate would be pumped back to the central boiler plant.

3.8 Summary

1. The existing steam and condensate system and all specialties are between 32 and 79 years old, in poor to severe condition, and need to be replaced.
2. The system is still operating; however, it's subject to failure at any location and at any time.
3. Failures could result in significant periods of time without heat, and could cause safety concerns to maintenance personnel.
4. Major repairs to the existing steam and condensate return piping would be severely difficult due to the condition and size of the existing tunnels.

SECTION 4 – EXISTING CHILLED WATER DISTRIBUTION SYSTEM EVALUATION

4.1 Introduction

A. The central chilled water plant is located on the north east side of the campus between the Cottonwood and Rain Tree buildings. Chiller plant was installed in 1980 with a total chiller room replacement and upgrade in 2003.

B. The central chilled water plant consists of two (2) chillers each with a capacity of 252 tons.

C. The central chilled water plant distributes chilled water via tunnel sections D and E to the following buildings:

1. Aspen
2. Pleasant View
3. Cottonwood
4. Raintree
5. Willow Creek
6. Oakridge
7. Sunset
8. Quail Run

D. This section will evaluate the existing chilled water system as a whole as well as in the individual tunnel sections.

4.2 Evaluation of the Overall System Integrity, Design and Performance

A. Integrity:

1. The chilled water production plant consisting of two (2) York chillers has been renovated in the last 10 years and is in good condition.
2. The integrity of the overall system has been compromised due to the age of the piping and specialties within the tunnel. The piping distribution system is approximately thirty two (32) years old.
3. Chilled water piping and specialties have also been damaged by the humid and corrosive atmosphere within the tunnel.
4. The chilled water supply and return piping to the eight (8) buildings noted is still providing cooling to the buildings; however the distribution piping and specialties are in bad condition and in danger for potential failures.

B. Design:

1. The design and sizing of the chilled water system is adequate and meets standard design practices. The chilled water piping is a two pipe, direct return system.

C. Performance:

1. The chilled water distribution system is still performing as designed, however taking into the account the age of the piping, condition of the piping and specialties, and other unknown factors would dictate providing a new chilled water distribution system from the chilled water plant branch tunnel to all buildings served.

4.3 Evaluation of Chilled Water Piping Condition

A. Tunnel Section A:

1. No chilled water piping in this section of tunnel.

B. Tunnel Section B:

1. No chilled water piping in this section of tunnel.

C. Tunnel Section C:

1. No chilled water piping in this section of tunnel.

D. Tunnel section D:

1. The main chilled water piping from the central chilled water plant enters into tunnel section D. The piping then splits in two directions with chilled water supply and return piping routed from the tees south to serve Cottonwood, Pleasant View and Aspen. Chilled water supply and return piping is also routed north from the tees where it serves Rain Tree and connects into tunnel section E.
2. The chilled water supply and return piping in tunnel section “D” is 32 years old and past ASHRAE’s recommended service life of 25 years. Since we cannot take samples of the piping, it is assumed the piping is in bad condition by the surface condition of the piping and is in spot location failure. The corrosive and humid atmosphere of the tunnel also plays a role in the deterioration of the piping.
3. The chilled water supply and return piping installed in 2003 is in fair to good condition within the central chiller room.

E. Tunnel section E:

1. The chilled water supply and return piping located in tunnel section E is routed northeast from the end of tunnel section D and serves Willow Creek. Chilled water is also routed northwest where it serves Quail Run, Oak Ridge and Sunset.

2. The Chilled water supply and return piping in tunnel section E is 32 years old and past ASHRAE’s recommended service life of 25 years.

It is assumed by the outward appearance of the piping that the piping is in bad condition and in spot location failure. This section of tunnel structure is leaking, and combined with the high humidity, creates a corrosive atmosphere that accelerates the deterioration of the piping.

4.4 Evaluation of Chilled Water Isolation Valve Locations, System Specialties and Capabilities

A. Tunnel section A:

1. No. Chilled water piping in this section of tunnel.

B. Tunnel section B:

1. No. Chilled water piping in this section of tunnel.

C. Tunnel section C:

1. No. Chilled water piping in this section of tunnel.

D. Tunnel section D:

1. Isolation Valves are located within the main chiller plant room and at the entrance to the main mechanical equipment room serving, Cottonwood, Pleasant View, and Aspen. These valves are both butterfly an gate type valves and are past ASHRAE's recommended service life.
2. Isolation valves are located in the mechanical equipment room serving Rain Tree. These valves are butterfly type valves and are past ASHRAE's recommended service life. The valves cannot be trusted to provide tight shut-off
3. The pipe supports, hangers, expansion joints, pipe guides and anchors located in tunnel section D are all 32 years old, deteriorating, and in bad condition. It is estimated that over 85 percent of the supports, guides and hangers are in bad condition and would need to be replaced. 100 percent of the expansion joints would require replacement.

E. Tunnel section E:

1. Isolation valves are located in the mechanical equipment rooms serving Willow Creek, Oak Ridge, Quail Run and Sunset. These valves are both butterfly and gate type valves and past ASHRAE's recommended service life. The valves cannot be trusted to provide tight shut off.

2. The pipe supports, hangers, expansion joints, pipe guides and anchors located in tunnel section E are all 32 years old, deteriorating and in bad condition. It is estimated that over 85 percent of the supports, guides and hangers are in bad condition and would need to

be replaced. 100 percent of the expansion joints would require replacement.

Branch Tunnel D From Central Chiller Plant – Chilled Water Split

Chilled Water Pipe Condition Tunnel Section E

4.5 Evaluation of Chilled Water Piping Insulation and Jackets

A. Tunnel section A:

1. No chilled water piping in this section of tunnel.

B. Tunnel section B:

1. No chilled water piping in this section of tunnel.

C. Tunnel section C:

1. No chilled water piping in this section of tunnel.

D. Tunnel section D:

1. The insulation and PVC jacketing in the main chiller plant was installed during the 2003 renovation. The condition of this insulation is only fair due to usage, repairs, leaks, etc.
2. The insulation on the piping within tunnel section D is in bad condition due to age, leaks, tunnel condition, and piping repairs. This insulation does not have a field applied jacket. The insulation is in need of replacement.

E. Tunnel section E:

1. The insulation on the piping within tunnel section E is in bad condition due to age, leaks, tunnel condition and piping repairs. This insulation does not have a field applied jacket. The insulation is in need of replacement.

4.6 Identification of Crucial Chilled Water System Inadequacies and Potential Failures

A. Tunnel section A:

1. No chilled water piping in this section of tunnel.

B. Tunnel section B:

1. No chilled water piping in this section of tunnel.

C. Tunnel section C:

1. No chilled water piping in this section of tunnel.

D. Tunnel section D:

1. Due to the age of the piping, (32 years), and due to the tunnel corrosive atmosphere, there could be more piping spot failures occurring in both piping and joints in the near future.
2. Pipe hangers and supports in some areas of this section of tunnel are so badly corroded and rusted that piping support failure could occur at any time.
3. Due to the tunnel ceiling leaks and the humid corrosive atmosphere within this tunnel section, the metal components i.e. hangers, supports, and anchors are all rusting and deteriorating rapidly.

E. Tunnel section E:

1. Due to the age of the piping, (32 years), and due to the tunnel corrosive atmosphere, there could be more piping spot failures occurring in both piping and joints in the near future.
2. Pipe hangers and supports in some areas of this section of tunnel are so badly corroded and rusted that piping support failure could occur at any time.
3. Due to the tunnel ceiling leaks and the humid corrosive atmosphere within this tunnel section, the metal components i.e. hangers, supports, and anchors are all rusting and deteriorating rapidly.

Chilled Water Gate Valve
Service to Cottonwood

Chilled Water Service to Raintree

4.7 Summary

A. Tunnel section D:

1. Chilled water supply and return piping in this section of tunnel is 32 years old, past ASHRAE's recommended service life, and located in a corrosive atmosphere. Piping should be replaced after tunnel atmosphere conditions have been corrected.
2. The chilled water piping specialties i.e. valves, expansion joints, pipe guides, anchors, hangers and supports are 32 years old and past ASHRAE's recommended service life. They are rusting and corroding and should be replaced after tunnel atmosphere conditions have been corrected.
3. Additional shut-off butterfly valves should be added for zone control. Valves should be provided in the chilled water supply and return piping serving the south zone form the main chiller plant junction. Valves should be provided on the chilled water supply and return piping at the main chiller junctions serving the north zone.
4. All new piping insulation with PVC field applied jackets needs to be installed on all new piping after tunnel atmosphere conditions have been corrected.
5. The building butterfly and gate valves serving Cottonwood, Pleasant View, Aspen, and Rain Tree need to be removed and replaced with butterfly valves. Flanged ball valves could be used up to 4".

B. Tunnel section E:

1. Chilled water supply and return piping in this section of tunnel is 32 years old, past ASHRAE's recommended service life and located in a corrosive atmosphere. Piping should be replaced after tunnel atmosphere conditions have been corrected.
2. The chilled water piping specialties i.e. valves, expansion joints, pipe guides, anchors, hangers and supports are 32 years old and past ASHRAE's recommended service life. They are rusting and corroding

rapidly and should be replaced after tunnel atmosphere conditions have been corrected.

3. Additional shut-off butterfly valves should be added for zone control. Valves should be provided in the chilled water supply and return piping serving the west zone and the east zone.
4. All new piping insulation with PVC field applied jackets need to be installed on all new piping after tunnel atmosphere conditions have been corrected.
5. The building butterfly and gate valves serving Willow Creek, Quail Run, Oakridge, and Sunset need to be removed and replaced with new butterfly valves. Flanged ball valves can be used up to 4 inch.

ARW ENGINEERS
structural consultants

December 31, 2012

Mr. Steve Wadsworth
WHW Engineering, Inc.
8619 Sandy Parkway Suite 101
Sandy, Utah 84070

Reference: Utah State Developmental Center Utility Tunnel Structural Assessment
ARW Project # 12192

Dear Mr. Wadsworth:

At your request, ARW Engineers has completed the walk-through and structural review of the utility tunnel complex on the Utah Developmental Center campus. The campus is located at 895 N. 900 E., American Fork, Utah. There is one main branch tunnel that extends from the heat plant. This tunnel serves several buildings throughout the campus. Several small branch tunnels extend off the main tunnel to access individual buildings. Some of these tunnels are clearly abandoned. Near the northern end of the campus the tunnel divides into two separate tunnels to access more buildings. See the key plan in appendix A for a map of the tunnels:

On October 18, 2012, a team of two engineers from our office performed a walk/crawl-through of the tunnel system. The purpose of our visit was to assess the general structural condition of the concrete tunnels as well as the integrity of any embedded items, typically Unistrut channels used to support mechanical pipe racks and electrical conduit. In this report we rank any observed structural deficiencies in terms of severity and impact on the long-term sustainability of the tunnels. Ranking is indicated as follows:

Slight – minimal or no corrosion observed - The condition or embedded item does not appear to have changed or been altered since installation.
Moderate – Slight deterioration/corrosion resulting in structural integrity lower than the original condition, but not severe.
Severe – Corrosion/deterioration such that the structural integrity of the item is in question and the long-term safe load carrying capability is compromised.
Critical – Corrosion/deterioration has reached the critical state. The element is at or appears to be near failure and the ability of the element to safely carry structural loads is not expected.

Nearly all structural issues observed are a result of water infiltration and subsequent corrosion. The term spalling is used in this report. Spalling is the condition where the concrete is cracked and has “popped out” or separated from the concrete structure it was should be integral with. Several pictures in appendix B show examples of spalling. In each tunnel description, the term “down” or “up” the tunnel may be used. The term “down” the tunnel is the direction away from the heat plant, while “up” the tunnel is the direction towards the heat plant. The site observation, and this report, began at the heat plant at the south-west corner of the campus and followed the tunnels from that that location.

The findings of our observations are summarized below. Reference Section 2.4 for a key plan of the tunnels and Appendix A.4 contains all of the pictures noted in the text.

TUNNELS A AND B-

This tunnel is a cast-in-place concrete tunnel, measuring approximately 3’-4” wide and 6’-6” tall. The tunnel is straight for approximately 363 feet before a 45 degree angle occurs. Mechanical piping runs along the side of the tunnel. The piping is supported on pipe racks or is supported from the roof of the tunnel.

Conditions-

1- The general structural condition of the first 363 feet of tunnel is ranked as *slight*.

2- There are three localized spots in this tunnel where the condition is considered severe.

   a. At approximately the middle of the tunnel, an abandoned tunnel extends to the right. This side tunnel dead ends at about 50 feet. At the intersection of the two tunnels, the roof structure has experienced severe deterioration and should be replaced.
   Cost estimate for lid replacement - $10,000-$15,000

   b. Approximately 50 feet up the tunnel from the 45 degree turn, the ceiling has experienced severe spalling as a result of rebar corrosion and should be replaced.
   Cost estimate for lid replacement - $10,000-$15,000

   c. At the end of this straight tunnel portion, where the 45 degree occurs, the tunnel lid(approximately 10 square feet) has experienced severe deterioration and is spalling and should be replaced.
   Cost estimate for lid replacement - $10,000-$15,000

3- After the tunnel continues past the 45 degree turn, there are three structural conditions that should be addressed.

   a. This portion of the tunnel is approximately 617 feet long to the end. Near the end of the tunnel it turns right and is no longer accessible. The first 161 feet is categorized as *slight*. At 161 feet the lid of the tunnel is no longer a cast in place concrete slab, but is a concrete slab on a vented steel deck. This lid occurs for the next 91 feet, changes back to cast in place concrete for 72 feet, back to vented deck for 97 feet, back to concrete for the remainder of the tunnel for a length of 197 feet. All locations where the vented steel deck occurs, it has experienced *severe* and/or *critical* corrosion and should be replaced.
   Cost estimate for lid replacement - $300-$500 per linear foot.

   b. The entire lid of the tunnel for approximately the last 200 feet of this segment is cast in place and has experienced *severe* and *critical* deterioration. Some rebar has completely corroded and large pieces of concrete have spalled and in some locations large chunks of concrete have fallen from the lid.
   Cost estimate for lid replacement - $300-$500 per linear foot

   c. At approximately 520 feet from the beginning of this segment, a 4-way intersection occurs. There is a tunnel heading to the left that is not shown on the piping plan. It is approximately 115 feet long and appears to be abandoned. The lid of this tunnel segment is in *severe* condition. At this 4-way intersection, we exited the tunnels though an unoccupied building to the right.
   Cost estimate for lid replacement - $300-$500 per linear foot

TUNNELS C, D, AND E-

Beginning at the east side of the administration building and heading east, the tunnels are constructed the same way and all exhibit the same structural issues. The tunnel consists of a concrete slab on 1-1/2" metal deck spanning approximately 3-4 feet to concrete walls. The tunnel crosses the roadway near the roundabout and heads north-west. For the remainder of tunnels D and E, the tunnel lid is the sidewalk.

Conditions-

1- The concrete walls are all in good shape with no structural issues observed during our walk through.

2- The metal deck lid of the tunnel has experienced *critical* deterioration in several locations and some areas are in the process of being replaced with new deck. The existing metal deck is a 1-1/2" Formlok deck and is a mixture of prime painted and galvanized. For this sort of application, the use of metal deck will provide a structure with a relatively short life span. Water infiltration will corrode the galvanized as well as the painted deck. The preferred option would be to install a concrete slab reinforced with epoxy coated rebar. Cracks and expansion joints in the side walk have reflected through the slab and have allowed water infiltration that has resulted in *critical* deck corrosion. In most of the locations where this has occurred, the deck is completely corroded and unsuitable to support structural loads. As expected, in many cases, the cracks in the side walk can be matched with a deteriorated flute(s) in the deck below.

   During our walk-through, we noticed that some construction was currently on-going to replace the deck in various areas. As long as the slab on metal deck forms the side walk and they are exposed to weather with little or no attempt to keep water from sitting on or infiltrating the tunnel, replacing sections of deck will be a regular and routine maintenance project on campus.

   Estimated cost of lid replacement for tunnels C, D, and E - $300-$500 per linear foot

TUNNEL F-

This is a short tunnel segment on the south side of the auditorium building. The tunnel consists of cast in place concrete tunnel walls with a cast in place concrete lid that forms the sidewalk above.

Conditions-

1- The concrete walls are categorized as *slight* with no structural issues observed during the walk through.

2- The lid of the tunnel was wet and dripping with condensation and has experienced some flaking and spalling. Rebar corrosion from water and chemical infiltration is likely the cause of the spalling. Sections of the lid where spalling has occurred should be replaced.

   Estimated cost of lid replacement for tunnel F - $300-$500 per linear foot

CONSTRUCTION ALTERNATIVE-

As requested by the owner, in lieu of the tunnel repair projects described in this report, the estimated cost to abandon the existing tunnel and construct a new tunnel system using 8" cast in place concrete walls with a clear height of 7 feet and a clear width of 6 feet would be approximately **$1,200-$2,000** per linear foot of tunnel**.** This estimate includes excavation costs but does not include demolition of the existing tunnel. This estimate does not include any mechanical or electrical costs as those have been provided by others.

This assessment is based on a visit to the site and observations, along with a review of any available structural drawings. No testing of existing elements was conducted as part of this project. Therefore, there may be structural issues that were not detectable or did not appear as severe as they are. Our suggestions are based on our professional opinion and experience with similar structures. The items listed herein are based solely on our observations and on comparisons with similar structures. There are some locations where *critical* structural deterioration has been observed and we recommend these areas be addressed immediately. These areas have been noted in the report. In the future, we strongly recommend that a maintenance schedule be implemented to help ensure a long useful life for these utility tunnels.

If you have any questions regarding this report please do not hesitate to contact us.

Respectfully,

Jeremy L. Achter SE LEEDap
Project Structural Engineer

Reviewed By,

Brent L. White SE SECB
Principal

12192_Utah Developmental Center Utility Tunnel Assessment_121712.doc

Thomas & Kolkman Engineering Company Inc.
64 West 1700 South
Salt Lake City, Utah 84115

Section 6 - Existing Electrical Systems

6.1 Evaluation of Existing Tunnel Electrical Systems

A. Existing Tunnel Lighting Systems

1. Tunnels A, B and C have bare lamp incandescent porcelain socket light fixtures. Some incandescent fixtures have been retrofitted with self-ballasted compact fluorescent lamps. Fixture spacing appears to be adequate, but illumination could be greatly improved with the use of fluorescent fixtures.

2. Tunnels D and E have fluorescent striplight fixtures with wire guard. Fixture spacing and location of fixtures above piping does not provide adequate illumination in the tunnels.

3. All fixtures are switched, usually only at the at the tunnel entrance from the building, which does not allow the lights to be turned on or off when entering or leaving an adjacent tunnel section. This results in lights being left on for extended periods of time wasting energy and increasing maintenance for lamp replacement.

4. Some fixtures, outlet boxes, and switch boxes show signs of corrosion. The corrosion is most apparent near the tunnel entrances to the residential buildings at the north end of the campus.

B. Existing Tunnel Receptacles

1. There does not appear to be any receptacles in the existing tunnels to use for power tools or other equipment for maintenance of other tunnel utility systems.

C. Existing Tunnel Conduit Systems

1. There are several conduit systems utilized throughout the tunnels for lighting, fire alarm system network wiring, and communications.

2. Most conduits are Electrical Metallic Tubing (EMT) installed directly to the wall or ceiling. The galvanized EMT conduit and supports appear to be in fair to good condition. Sheet steel pullboxes and outlet boxes, both painted and galvanized which are intended for indoor dry locations, show signs of corrosion. The corrosion is most apparent near the tunnel entrances to the residential buildings at the north end of the campus.

3. Type ‘MC’ (Metal Clad) Cable has been also been used for lighting circuits in Tunnels A, B, and C. In general, the MC Cable has not been properly supported as required by NEC 300.11. The cable has been supported from other conduit systems and is not supported with 12" of outlet boxes.

   a. The use of Type ‘MC’ Cable may not be appropriate in the tunnels. NEC 330.12 does not allow the use of MC Cable where subject to physical damage. The cable could easily be damaged by failure of tunnel piping systems or by work activities in the tunnels. Also, DFCM Design

Requirements allows MC Cable only when concealed in ceilings and walls.

4. Most conduit and cable has been installed with adequate separation from steam and condensate piping. Some conduit has been installed too close to steam and condensate piping, usually in congested areas of smaller tunnels where there is not enough physical space to provide adequate separation between the conduit and piping.

5. Some conduit systems appear to be abandoned as indicated by empty junction boxes, or cut wiring in outlet and junction boxes.

D. Existing Tunnel Communication Cables

1. Communication cables are installed in conduit and exposed throughout the tunnels. Exposed communication cables are subject to damage.

2. The cables are typically supported from the ceiling, walls, or pipe support racks, but some cables are supported from electrical conduit or piping systems which is not allowed by the national electrical code. Some communication cables were noted as being installed exposed on the floor of the tunnel or draped across piping systems and are not supported or secured in place.

3. There are also some abandoned communication cables which have been cut at some point but have not been completely removed.

E. Existing Tunnel Medium Voltage Cables

1. Medium voltage feeders for the campus 12,470/7,200 Volt primary distribution system are installed in most of the existing tunnels from the Chiller Building to the Heating Plant.

2. Galvanized rigid steel conduit is used for the most of the medium voltage feeders. The conduit is typically supported by pipe hangers on the tunnel walls and ceilings. There are several pullboxes to assist in pulling conductors. Some pullboxes may have conductor splices which are the most likely location for cable failure, along with the cable terminations.

3. Type ‘MV-90' Metal Clad Cable with a PVC outer jacket has been used in Tunnel A to serve the Heating Plant Transformer. There is one cable splice in the metal clad cable feeder.

4. In general, the medium voltage feeder conduit and cable systems in the existing tunnels appears to be in good condition with the following exceptions:

   a. Some pullboxes show signs of corrosion, but the corrosion is not significant and does not appear to affect the integrity of the pullbox, yet.

   b. A portion the metal clad cable Tunnel A is not properly supported. The medium voltage cable, the light circuit cables, and abandoned communication cables all appear to supported from an abandoned light circuit conduit.

6.2 Evaluation of Existing Campus Electrical Distribution System

A. Overview of the Campus Electrical Distribution System

1. The campus electrical distribution system begins at the Rocky Mountain Power primary metering cabinet located on 900 East Street at a service voltage of 12,720/7,200 Volt, 3 Phase, 4 Wire. An air insulated fusible switch is located adjacent the metering cabinet.

2. Power from the fusible switch is distributed to a small single phase transformer serving three Twin Homes and to a switch at the Chiller Building. The switch at the Chiller Building serves the remainder of the campus in a radial feed configuration.

3. The distribution system shows signs of incremental planning and design such as conductor taps to serve some buildings rather than connecting through a switch to allow isolation of the building electrical system with minimum disruption to the overall campus.

4. A brief description of each building electrical system follows and includes existing equipment information and potential risks that were observed. The information is generally limited to the primary electrical service, the primary transformer, and the secondary service disconnect. Additional information for secondary electrical distribution equipment is included only where a significant potential risk was observed. Each building description is intended to:

    a. Identify equipment which may be obsolete, defective, or which should be replaced to improve the overall reliability and function of the electrical distribution system.

    b. Identify installations which do not meet current National Electrical Code, National Electrical Safety Code, or International Building Code requirements, or which may otherwise be a potential risk to life safety and property.

5. Installation dates are generally determined by the manufacture dates of the equipment and should be considered approximate only.

6. The sequence of the building electrical service descriptions is by the highest potential risk and need for improvements and upgrades.

B. Evergreen, Medical Services, Therapy, and Administration Buildings

1. The Evergreen Building was originally constructed in 1956. The Medical Services Building addition in 1968 included an electrical upgrade with the installation of Loop Feed Oil Switch ‘S10', Fused Oil Switch ‘S11' and oil filled Transformer ‘T09' in the Evergreen Transformer Vault to replace the existing electrical equipment.

    a. The loop feed oil switch is served from Fused Oil Switch ‘S07' in the Recreation Building and continues to Fused Oil Switch ‘S13' in the Division of Child and Family Services building.

2. About 1976, Fused Oil Switch ‘S12', dry type Transformer ‘T10', and a new secondary service disconnect switch were added in the Evergreen transformer vault to serve a chiller and associated equipment to provide air conditioning for

the building. A tap was made from the loop feed oil switch to the new fused oil switch.

3. Some time later, an automatic transfer switch was installed in the Evergreen transformer vault with a 100 KW generator above the vault. An 800 Ampere main breaker was also installed in the transformer vault with connections to existing Transformer 'T09' and through the automatic transfer switch to the existing building electrical panels.

4. The Therapy Building was constructed in 1972 which included pad mount Transformer 'T12' and separate electrical service.

    a. Transformer 'T12' is served from Fused Oil Cut Out 'S08' in the Recreation Building through a load break junction.

5. The Administration Building was constructed in 1976 and included pad mounted Transformer 'T13' and another separate electrical service. The building construction joined the Evergreen, Medical Services, and Therapy buildings.

    a. Transformer 'T13' is also served from Fused Oil Cut Out 'S08' in the Recreation Building through the same load break junction as the Therapy Building Transformer 'T12'.

<u>Evergreen Equipment Information:</u>

Loop Feed Oil Switch 'S10':

Manufacturer:	G & W Electric
Catalog Number:	VGRAL–S
Serial Number:	A 14507
Ratings:	400 Ampere, 15,000 Volt
Installed Date:	1968

Fused Oil Switch 'S11':

Manufacturer:	G & W Electric
Catalog Number:	FC-61
Serial Number:	9-68
Switch Ratings:	100 Ampere, 15,500 Volt
Fuse Ratings:	G& W Type FL, ??? Amps
Installed Date:	1968

Fused Oil Switch 'S12':

Manufacturer:	G & W Electric
Catalog Number:	FC-61
Serial Number:	9-76
Switch Ratings:	100 Ampere, 15,500 Volt
Fuse Ratings:	G& W Type FL, ??? Amps
Installed Date:	1976

Transformer 'T09':

Manufacturer:	Westinghouse
Style	A6513A51AA1
Serial Number:	68L5424
KVA Rating:	225 KVA, 65^0 C Rise
Primary Ratings:	12,470 Volt, T, 18.0 Amps
Secondary Ratings:	120/208 Volt, 3 Phase, T, 625 Amps
Impedance:	1.8%

Insulating Fluid: Mineral Oil
Primary Protection: Switch 'S11', Fuse ratings not field verified.
Secondary Protection: Main: 800 Amp Circuit Breaker, manufacturer and type not verified. (Main breaker in transformer vault)
Largest Branch: Westinghouse 600A, type not verified (Building Panel #1 Main Breaker)

Transformer 'T10':
Manufacturer: Square D
Type: SHT (Dry Type)
Style: 129059
Serial Number: P506651TNE
KVA Rating: 225 KVA, 150^0 C Rise, 220^0 C Insulation System
Primary Ratings: 12,470 Volt, Delta, 10.4 Amps
Secondary Ratings: 120/208 Volt, 3 Phase, Wye, 625 Amps
Impedance: 5.1%
Primary Protection: Switch 'S12', Fuse ratings not field verified.
Secondary Protection: Main: 3P-800A Fusible Switch, Fuse type not field verified.
Largest Branch: 3P-600A Fusible Switch, Fuse type not field verified.

Therapy Equipment Information:

Transformer 'T12':
Manufacturer: General Electric
Serial Number: L188302T73A
KVA Rating: 150 KVA, 65^0 C Rise
Primary Ratings: 12,470 Volt, Delta, 6.9 Amps
Secondary Ratings: 120/208 Volt, 3 Phase, Wye, 416 Amps
Impedance: 1.5%
Insulating Fluid: Mineral Oil
Primary Protection: Fused Oil Cutout 'S08', Fuse ratings not field verified.
Secondary Protection: Main: G.E. Type QMR-3R6 3P-800A Fusible Switch, Fuse type not field verified.
Largest Branch: G.E. Type TFK 3P-400A Breaker

Administration Equipment Information:

Transformer 'T13':
Manufacturer: Westinghouse
Style: A64A5306ZC
Serial Number: 76D215006
KVA Rating: 300 KVA
Primary Ratings: 12,470 Volt, Delta, 13.9 Amps
Secondary Ratings: 120/208 Volt, 3 Phase, Wye, 833 Amps
Impedance: 3.8%
Insulating Fluid: Mineral Oil
Primary Protection: Fused Oil Cutout 'S08', Fuse ratings not field verified. Under oil fuses in primary, fuse ratings not verified.
Secondary Protection: Multiple Mains:
Westinghouse 3P-800A Type 'MC' Breaker.
Instantaneous trip set at 8X.
Westinghouse

3P-400A, breaker type not indicated.

6. Observations and Potential Risks for Evergreen, Therapy, and Administration Buildings:

   a. The Evergreen oil insulated Loop Feed Switch ‘S10' and fused oil switches should be replaced with new design switches to improve safety and meet current electrical code requirements. See the Distribution Equipment Summary for additional information.

   b. Addition of Dry Type Transformer ‘T10', Fused Oil Switch ‘S12', and the secondary fused safety switch severely restricted equipment access and working clearances in the Evergreen Transformer Vault as required by NEC 110.26, 110.32, 110.33 and 110.34 (A).

   c. The secondary fused safety switch, enclosed circuit breaker, and automatic transfer switch in the Evergreen Transformer Vault should be separated from the medium voltage equipment and transformers as required by NEC 110.34 (B).

   d. The feeder from the Evergreen generator to the automatic transfer switch was installed through existing circuit breakers which were serving Laurelwood and Tulip residential buildings. The circuit breakers are connected in parallel in violation of NEC 240.8.

   e. Existing Transformer ‘T10' and ‘T11' are approximately 44 and 36 years old respectively and may be near the end of their useful life. See Distribution Transformer Summary for additional information.

   f. Primary overcurrent protection for both the Therapy and Administration Transformers ‘T12' and ‘T13' is provided by Fused Oil Cutout ‘S08' in the Recreation Building. A fuse rating cannot be selected to adequately protect both the 300 KVA and 150 KVA transformers, and still allow full utilization of the transformer capacity.

   g. Addition of the Administration Building physically attached the Evergreen and Therapy Buildings. Each building has a separate electrical service in violation of NEC 230.2 which allows only one electrical service for a building or structure.

C. Recreation Electrical Vault

1. The Recreation Building was originally constructed in 1933. The space below the loading dock was converted for use as an Electrical Vault about 1969. Equipment includes Loop Feed Oil Switch ‘S05', Fused Oil Switches ‘S06', ‘S07', ‘S08', and ‘S09', and a load break junction.

2. Loop Feed Oil Switch ‘S05' is served from Electrical Building Interrupter Switch ‘S03'. Power is distributed to the south campus buildings through the fused oil switches. The vault is a major node of the radial feed distribution system.

3. There are not any transformers installed in the Recreation Electrical Vault. The Recreation Building secondary power is served from the distribution panelboard in the Electrical Building.

<u>Recreation Equipment Information:</u>

Loop Feed Oil Switch ‘S05':

Manufacturer:	G & W Electric
Catalog Number:	RAM55-376M-40M
Serial Number:	611-73-0063
Ratings:	600 Ampere, 15,000 Volt
Installed Date:	1973?

Fused Oil Switch ‘S06':

Manufacturer:	G & W Electric
Catalog Number:	FC-61
Serial Number:	6-69
Switch Ratings:	100 Ampere, 15,500 Volt
Fuse Ratings:	G& W Type FL, 20 Amps
Installed Date:	1969

Fused Oil Switch ‘S07':

Manufacturer:	G & W Electric
Catalog Number:	FC-61
Serial Number:	6-69
Switch Ratings:	100 Ampere, 15,500 Volt
Fuse Ratings:	G& W Type FL, ??? Amps
Installed Date:	1969

Fused Oil Switch ‘S08':

Manufacturer:	G & W Electric
Catalog Number:	FC-61
Serial Number:	11-72
Switch Ratings:	100 Ampere, 15,500 Volt
Fuse Ratings:	G& W Type FL, ??? Amps
Installed Date:	1972

Fused Oil Switch ‘S09':

Manufacturer:	G & W Electric
Catalog Number:	FC-61
Serial Number:	11-76
Switch Ratings:	100 Ampere, 15,500 Volt
Fuse Ratings:	G& W Type FL, ??? Amps
Installed Date:	1976

4. Observations and Potential Risks for Recreation Electrical Vault:

   a. The oil insulated loop feed switch and fused oil switches should be replaced with new design switches to improve safety and meet current electrical code requirements. See the Distribution Equipment Summary for additional information.

   b. The oil insulated switched should be installed in fire rated vault to comply with NEC 490.3.

   c. Equipment access and working clearances are not provided in the electrical vault as required by NEC 110.31, 110.32 and 110.34 (A).

D. Division of Child and Family Services

1. The Division of Child and Family Services was originally constructed in 1966 and

included a Transformer Vault on the lower level. Equipment includes Fused Oil Switch ‘S13', and Transformer ‘T11' which is a bank of 3 single phase oil filled transformers.

2. Fused Oil Switch ‘S13' is served from Evergreen Building Loop Feed Switch ‘S10' and is the end of a radial feed distribution branch.

3. The secondary service disconnect is installed outside the building and connected through a 100 KW Generator with an Automatic Transfer Switch.

4. The secondary service also serves an air cooled chiller and the Service Station through separate fused safety switches in the transformer vault.

<u>Equipment Information:</u>

Fused Oil Switch ‘S13':

Manufacturer:	G & W Electric
Catalog Number:	FC-61
Serial Number:	3-66 and 5-66
Switch Ratings:	100 Ampere, 15,500 Volt
Fuse Ratings:	G& W Type FL, ?? Amps
Installed Date:	1966

Transformer ‘T11': 3 Single Phase Units

Manufacturer:	Westinghouse
Style:	N121N50CD2
Serial No.	66A7108
KVA Rating:	50 KVA Each, 150 KVA Total
Primary Ratings:	12,000 Volt (Delta Connected) 6.9 Amps at 12,470 Volt, 3 Phase
Secondary Ratings:	120/240 Volt (Wye Connected) 417 Amps at 120/208 Volt, 3 Phase
Impedance:	1.5%
Insulating Fluid:	Mineral Oil
Primary Protection:	Switch ‘S13', Fuse ratings not field verified.
Secondary Protection:	Main: Square D Type '???’ 500 Amp Circuit Breaker, Adjustable Instantaneous Trip Setting not verified Largest Branch: Building Panel Main Breaker, 400 Amp

5. Observations and Potential Risks for Division of Child and Family Services:

   a. The fused oil switch should be replaced with new design switches to improve safety and meet current electrical code requirements. See the Distribution Equipment Summary for additional information.

   b. The oil filled transformers are approximately 45 years old and may be near the end their useful life.

   c. The secondary electrical service entrance conductors are installed from the transformers to a cable tray in the transformer vault and then in conduit to a main breaker and through the automatic transfer switch outside the building. The conductors return from the automatic transfer switch to the cable tray in the transformer vault and are spliced to original building electrical service conductors and to the separate fused safety switches for the air cooled chiller and the Service Station.

(1) Installing the secondary service entrance conductors in the cable tray with feeder conductors from the load side of the main breaker may be considered a violation NEC 230.7.

E. Electrical Building:

1. The Electrical Building Transformer Vault was originally constructed in 1964? to provide electrical service for a new Central Kitchen building, existing buildings at the time, and 3 future Residential Buildings (Mountain View, Heather, and Woodland). The original installation included oil insulated switches, Transformer 'T05' and a 2,000 Secondary Panelboard with feeders to the buildings.

   a. Transformer 'T06' and another oil insulated were added in 1970 to provide 480 Volt, 3 Phase electrical service to the Well Pump building.

   b. Interrupter Switches 'S03' and 'S04' were installed in 1995 to replace the existing oil insulated switches.

2. Interrupter Switch 'S03' is served from Chiller Building Interrupter Switch 'S02' and is a radial feed node which serves the Electrical Building Transformers Interrupter Switch 'S04', the overhead power line, the Laundry Building Transformer 'T07', and Recreation Building Switch 'S05'. There is one spare switched way on Interrupter Switch 'S03'.

3. Transformer 'T06' serves a 2000 Amp Distribution Panel in the Electrical Building at 120/208 Volt, 3 Phase which provides electrical service to several buildings in the area.

4. A 175 KW Generator is also installed at the Electrical Building with an Automatic Transfer Switch for the Kitchen electrical service and a Manual Transfer Switch for the TLC Building electrical service.

<u>Equipment Information:</u>

Vacuum Interrupter Switch 'S03':

Manufacturer:	G & W Electric
Catalog Number:	PVI63-376-12-SP
Serial Number:	629-95-0255
Voltage Rating:	15,000 Volt
Continuous Current:	600 Amp Main / 200 Amp Tap
Interrupting Current:	600 Amp Main / 12,000 Amp Tap
Momentary Current:	19,200 Amperes, Asymmetrical
Manufactured Date:	November, 1995

Vacuum Interrupter Switch 'S03':

Manufacturer:	G & W Electric
Catalog Number:	VPVI31-376-12-7F
Serial Number:	630-95-0044
Voltage Rating:	15,000 Volt
Continuous Current:	600 Amp Main / 200 Amp Tap
Interrupting Current:	600 Amp Main / 12,000 Amp Tap
Momentary Current:	19,200 Amperes, Asymmetrical
Manufactured Date:	October, 1995

Transformer 'T05': 3 Single Phase Units

Manufacturer:	General Electric

Type:	HS
Serial No.	F947288-64K
KVA Rating:	250 KVA Each, 750 KVA Total
Primary Ratings:	12,470 Volt, Delta Connected, 34.7 Amps
Secondary Ratings:	120/240 Volt, (Wye Connected) 2,083 Amps at 120/208 Volt, 3 Phase
Impedance:	2.3%
Insulating Fluid:	Mineral Oil
Primary Protection:	Switch 'S04', Trip Setting 50 Amps, E Slow Speed.
Secondary Protection:	Main: Distribution Panel, 2000 Amp Main Lugs only. Largest Branch: 800 Amp, General Electric (Type not indicated on circuit breaker)

Transformer 'T06': 3 Single Phase Units

Manufacturer:	Pennsylvania Pole Star
Spec:	U-3633B
Serial No.	28937-12
KVA Rating:	37.5 KVA Each, 112.5 KVA Total, 55^0 C Rise
Primary Ratings:	7,200/12,470 Volt WYE, 5.2 Amps
Secondary Ratings:	240/480 Volt, Delta, 135 Amps
Impedance:	2.5%
Insulating Fluid:	Inhibited Oil (Mineral Oil ?)
Primary Protection:	Switch 'S04', Trip Setting 6.5 Amps, E Slow Speed.
Secondary Protection:	Main: Enclosed Circuit Breaker, Rating not field verified. Largest Branch: Combination starter in Well Pump Building, rating not field verified.

5. Observations and Potential Risks for Electrical Building:

a. The G & W Electric SF_6 insulated Interrupter Switches 'S03' and 'S04' appear to be current design and should remain in place. See the Distribution Equipment Summary for additional information.

b. T-Tap elbow inserts with 12 KV elbow type surge arresters are installed on the incoming feeder from the Chiller Building. 9 KV surge arresters are generally recommended for use on 7,200/12,470 Volt, Wye connected distribution systems and will provide better protection of the cables from voltage surges.

c. Transformers 'T05' and 'T06' are approximately 48 and 42 years old respectively and may be near the end their useful life. See Distribution Transformer Summary for additional information.

d. The Electrical Building, considered as a detached building, may not be required to be a transformer vault as allowed by NEC 450.26, Exception No. 5. However, upgrade of the transformer room may be required to comply with access requirements of NEC 110.33 and working clearance requirements of NEC 110.34. The doors should be changed to swing out and equipped with panic hardware as a minimum.

e. The 2,000 Ampere secondary distribution panel appears to be original installation. The circuit breakers are not marked with the manufacturer's type or interrupting ratings. The available short circuit current from the existing 750 KVA transformer bank at 2.3% impedance could be as high

as 90,000 amperes. The existing circuit breakers probably do not have a short circuit current interrupting rating in excess of 10,000 amperes, if any rating at all, and do not comply with NEC 110.9 and/or 110.10.

f. The high short circuit current rating also presents a high arc-flash hazard which should be considered as required by NEC 110.16.

F. Overhead Power Line:

1. An existing overhead power line served as the original power feed to the campus and has been reconnected to a new underground electrical distribution system. The overhead power line is constructed for 3 phase service but is currently connected for single phase operation.

   a. The overhead power line is served from Switch 'S03' at the Electrical Building and is protected by fused cutouts and lightning arresters on the feed pole at the Electrical Building.

   b. The overhead power line serves Pole Mount Transformer 'TP1' and Twin Home #4 Transformer 'TH2'. Both transformers are single phase.

<u>Overhead Power Line Equipment Information:</u>

Transformer 'TP1': Irrigation Sprinkler Controllers

KVA Rating:	20? KVA
Type:	Pole Mount
Primary Ratings:	7,200 Volt, Single Phase
Secondary Ratings:	120/240 Volt, Single Phase
Nameplate is not available for additional information.	
Primary Protection:	Fused Cutout, fuse rating not verified.
Secondary Protection:	Load Center with (4) 1P-20A breakers.

Transformer 'TH2': Twin Home #4

Manufacturer:	Betz Transformers
Serial No.	C00217091
Type:	Pad Mount
KVA Rating:	75 KVA
Primary Ratings:	7,200 Volt, 10.4 Amps
Secondary Ratings:	120/240 Volt, 1 Phase, 208 Amps
Impedance:	2.7%
Insulating Fluid:	Mineral Oil
Primary Protection:	Fused Cutout, fuse rating not verified. Bayonet Fusing in Primary, fuse rating not verified.
Secondary Protection:	Two Fusible Safety Switches with Ferrez Shawmut 200 Amp 'Trionic' dual element, time delay fuses. Largest Branch: Panel circuit breakers not verified.

2. Observations and Potential Risks for Overhead Power Line:

   a. The overhead power line is probably as old as the campus and is in poor condition. A pole near the Electrical Building recently caught fire, probably due to dirt build up on the insulators allowing the voltage to "track" to grounded metal parts on the pole, and damaged the cross arms.

b. The overhead power line has very limited use to serve only two transformers although some communication lines are also installed on the poles.

G. Chiller Building

1. The Chiller Building was constructed about 1980 and included pad mounted Transformer 'T01' and oil insulated switches for primary distribution. In 1996 the oil insulated switches were replaced with a new SF_6 insulated Vacuum Interrupter Switch 'S02'.

   a. Switch 'S02' is served from the main campus fused interrupter Switch 'S01' and is a radial feed node which serves the Electrical Building Switch 'S03', Chiller Building Transformer 'T01', and transformers for Phases I, II, & III Residential Buildings. There are not any spare switched ways on Interrupter Switch 'S02'.

<u>Chiller Equipment Information:</u>

Vacuum Interrupter Switch 'S02':

Manufacturer:	G & W Electric
Catalog Number:	PVI63-376-12-SP
Serial Number:	629-95-0226
Voltage Rating:	15,000 Volt
Continuous Current:	600 Amp Main / 200 Amp Tap
Interrupting Current:	600 Amp Main / 12,000 Amp Tap
Momentary Current:	19,200 Amperes, Asymmetrical
Manufactured Date:	November, 1995

Transformer 'T01':

Manufacturer:	Square D
Catalog Number:	27CV12K36R
Serial Number:	806003452
KVA Rating:	750 KVA
Primary Ratings:	12,470 Volt, Delta, 34.7 Amps
Secondary Ratings:	277/480 Volt, 3 Phase, Wye, 902 Amps
Impedance:	5.2%
Insulating Fluid:	Mineral Oil
Primary Protection:	McGraw Edison 'NX' 40 Amp Current Limiting Fuses
Secondary Protection:	Main: Square D 'P' Frame Breaker, 3P-1200A with Ground Fault Protection (in transformer secondary compartment)
	Largest Branch: Square D Type QMB Fusible Switch, 3P-600A, in main panel, 200 KA fuses, type not visible.

2. Observations and Potential Risks for Chiller Building:

   a. The G & W Electric SF_6 insulated Interrupter Switch 'S02' appears to be of current design and should remain in place. See the Distribution Equipment Summary for additional information.

   b. Transformer 'T07' has a live front primary with exposure to live parts required for maintenance and should be replaced to improve safety for maintenance personnel.

(1) The transformer is approximately 32 years old and may be nearing the end of it's useful life. See Distribution Transformers Summary for additional information.

c. T-Tap elbow inserts with 12 KV elbow type surge arresters are installed on the incoming feeder from the main campus Switch 'S01'. 9 KV surge arresters are generally recommended for use on 7,200/12,470 Volt, Wye connected distribution systems and will provide better protection of the cables from voltage surges.

H. Phase I (Quailrun, Sunset, and Oakridge)

1. Phase I Buildings were constructed in 1980 and included pad mounted Transformer 'T02' with a secondary distribution panel for connection to each building.

a. Transformer 'T02' is served from Interrupter Switch 'S02' at the Chiller Building.

<u>Phase I Equipment Information:</u>

Transformer 'T02':

Manufacturer:	Square D
Catalog Number:	27CV12K35R
Serial Number:	806003451
KVA Rating:	750 KVA
Primary Ratings:	12,470 Volt, Delta, 34.7 Amps
Secondary Ratings:	277/480 Volt, 3 Phase, Wye, 902 Amps
Impedance:	5.2%
Insulating Fluid:	Mineral Oil
Primary Protection:	McGraw Edison 'NX' 40 Amp Current Limiting Fuses
Secondary Protection:	Main: Square D 'P' Frame Breaker, 3P-1200A with Ground Fault Protection (in transformer secondary compartment)
	Largest Branch: Square D Type LA 3P-400A

2. Observations and Potential Risks for Phase I Buildings:

a. Transformer 'T02' has a live front primary with exposure to live parts required for maintenance and should be replaced to improve safety for maintenance personnel.

(1) The transformer is approximately 32 years old and may be nearing the end of it's useful life. See Distribution Transformers Summary for additional information.

b. The secondary feeder conductors from the transformer distribution panel are installed through the tunnel to each building and terminate in a fusible switchboard located in the upper level mechanical room. Access to the mechanical room is by a fixed ladder from a storage room on the main floor.

(1) NEC 225, Part II defines the requirements for Building or

Structures supplied by outside feeders. The requirements are basically the same as for main service conductors established in NEC 230. Specifically NEC 225.32 requires "The disconnecting means shall be at a readily accessible location nearest the point of entrance of the conductors."

(2) The disconnecting means in the upper level mechanical room does not meet the requirements NEC 225.32 but may qualify under Exception No. 1 if all USDC maintenance personnel are trained to shut down power to the buildings at the transformer distribution panel rather than at the building main panel, and have key access to the fenced electrical area and the padlocked distribution panel.

(3) Feeders from the generators near the transformer to each building are installed in a similar manner and the requirements of NEC 225, Part II apply to these conductors as well. The generator disconnect breakers will need to be clearly labeled and accessible to qualify under NEC 225.32, Exception No. 1.

I. Phase II (Willow Creek and Raintree)

1. Phase II Buildings were constructed in 1980 and included pad mounted Transformer 'T03' with a secondary distribution panel for connection to each building.

   a. Transformer 'T02' is served from Interrupter Switch 'S02' at the Chiller Building.

2. A generator was added in 2000 for the buildings and the distribution panel was replaced with a new distribution panel which included an automatic transfer switch for the generator.

<u>Phase II Equipment Information:</u>

Transformer 'T03':

Manufacturer:	Square D
Catalog Number:	28BV12K7LR
Serial Number:	806001484
KVA Rating:	750 KVA
Primary Ratings:	12,470 Volt, Delta, 34.7 Amps
Secondary Ratings:	120/208 Volt, 3 Phase, Wye, 2081 Amps
Impedance:	5.8%
Insulating Fluid:	Mineral Oil
Primary Protection:	McGraw Edison 'NX' 40 Amp Current Limiting Fuses
Secondary Protection:	Main: Cutler Hammer 3P-1600A Bolt Loc Switch, Fuse Rating not field verified. Largest Branch: Cutler Hammer Type 'MDL' 3P-400A Breaker, Instantaneous Trip set at 8 (Maximum)

3. Observations and Potential Risks for Phase II Buildings:

   a. Transformer 'T03' has a live front primary with exposure to live parts required for maintenance and should be replaced to improve safety for maintenance personnel.

(1) The transformer is approximately 32 years old and may be nearing the end of it's useful life. See Distribution Transformers Summary for additional information.

b. The secondary feeder conductors from the transformer distribution panel terminate in fusible switchboard in each building. The switchboard not have a main switch to serve as a disconnecting means.

(1) NEC 225 Part II, as described above for Phase I, also applies to the feeder conductors installed from the outside distribution panel to the building main panels including the requirement for a disconnecting means at each building.

(2) The feeder conductors installed underground (outside of the building) terminate in the main panel and are acceptable.

(3) The omission of the building disconnecting means may be acceptable under NEC 225.32, Exception No. 1.

J. Phase III (Pleasant View, Cottonwood, and Aspen)

1. Phase III Buildings Pleasant View and Cottonwood were constructed in 1981 and included pad mounted Transformer 'T04' and one secondary electrical service for both buildings. The Aspen building was constructed in 1984 and included a separate secondary electrical service from Transformer 'T04' to the new building.

a. Transformer 'T04' is served from Interrupter Switch 'S02' at the Chiller Building.

<u>Phase III Equipment Information:</u>

Transformer 'T04':

Manufacturer:	Westinghouse
Style:	AY2A560TRH
Serial Number:	84JA097158
KVA Rating:	500 KVA
Primary Ratings:	12,470 Volt, Delta, 23.1 Amps
Secondary Ratings:	120/208 Volt, 3 Phase, Wye, 1,388 Amps
Impedance:	5.0%
Insulating Fluid:	Mineral Oil
Primary Protection:	McGraw Edison 'NX' 40 Amp Current Limiting Fuses
Secondary Protection:	Main: Westinghouse 3P-800A Bolt Loc Switch
(Aspen)	Largest Branch: Westinghouse Type 'HKB' 3P-150A Breaker
Secondary Protection:	Main: Square D 3P-800A Bolt Loc Switch
(Pleasant View)	Largest Branch: Square D Type 'KA' 3P-225A Breaker

2. Observations and Potential Risks for Phase III Buildings:

a. Transformer 'T04' has a live front primary with exposure to live parts required for maintenance and should be replaced to improve safety for maintenance personnel.

(1) The transformer is approximately 31 years old and may be nearing the end of it's useful life. See Distribution Transformers Summary for additional information.

K. Maintenance (Laundry)

1. The Maintenance Building was constructed in1983 as a laundry facility and included pad mounted Transformer 'T07'. Some laundry equipment remains, but is not used at this time and the building is used primarily for facilities maintenance.

    a. Transformer 'T07' is served from Interrupter Switch 'S03' at the Electrical Building.

Laundry Equipment Information:

Transformer 'T07':

Manufacturer:	General Electric
Serial Number:	N235693TAUA
KVA Rating:	500 KVA
Primary Ratings:	12,470 Volt, Delta, 23.1 Amps
Secondary Ratings:	277/480 Volt, 3 Phase, Wye, 601 Amps
Impedance:	4.89%
Primary Protection:	Interrupter Switch 'S3', 50 Amp, E Slow trip setting.
Secondary Protection:	Main: G.E. Type TKM 3P-800A Main Breaker Largest Branch: G.E. Type TFK 3P-350A Breaker

2. Observations and Potential Risks for Laundry Building:

    a. Transformer 'T07' has a live front primary with exposure to live parts required for maintenance and should be replaced to improve safety for maintenance personnel.

    b. The transformer is approximately 30 years old and may be nearing the end of it's useful life. See Distribution Transformers Summary for additional information.

L. Auditorium

1. A new electrical service was installed for the Auditorium in 1999 which included a new pad mount distribution Transformer 'T14' and new secondary service switchboard outside the building.

    a. Transformer 'T14' is served from Fused Oil Switch 'S09' in the Recreation Building.

Auditorium Equipment Information:

Transformer 'T14':

Manufacturer:	Cooper Power Systems
Catalog Number:	0045WP12K35A
Serial Number:	9837004119
KVA Rating:	750 KVA
Primary Ratings:	12,000 Volt, Delta, 34.7 Amps at 12,470 Volt
Secondary Ratings:	120/208 Volt, 3 Phase, Wye, 2,082 Amps
Impedance:	6.4%
Insulating Fluid:	Mineral Oil
Primary Protection:	Switch 'S09', G&W 'FL' Fuse, rating not verified.

Secondary Protection: Siemens ‘SB2' Switchboard with Multiple Mains:
3P-800A, Type ‘
3P-600A, Type ‘
3P-200A, Type ‘FXD’
Provisions for 3 future main breakers.
Manufactured Date: December 1998

2. Observations and Potential Risks for Auditorium:

a. Transformer ‘T14' has feed-through bushing inserts with 15 KV elbow type surge arresters connected to one side. 9 KV surge arresters are generally recommended for use on 7,200/12,470 Volt, Wye connected distribution systems and will provide better protection of the transformer from voltage surges.

M. Heating Plant

1. The Heating Plant is a new building constructed in 2010. The electrical service included new pad mounted Transformer ‘T08'

a. Transformer ‘T08' is served from Fused Oil Switch ‘S06' in the Recreation Building.

<u>Heating Plant Equipment Information:</u>

Transformer ‘T08':
Manufacturer: Cooper Power Systems
Catalog Number: 0000HP11XRPA
Serial Number: 10500001400
KVA Rating: 500 KVA
Primary Ratings: 12,470 Volt, Delta, 23.1 Amps
Secondary Ratings: 277/40 Volt, 3 Phase, Wye, 601 Amps
Impedance: 3.6%
Insulating Fluid: Cooper Envirotemp FR3 biodegradable insulating fluid
Primary Protection: Switch ‘S06', G&W ‘FL’ Fuse, rating not verified.
Transformer Bayonet Fusing:
50 Amp Current Sensing, Cooper 4038108C12
100 Amp Partial Range Current Limiting, Cooper 3544100M71M
Secondary Protection: Siemens ‘SB2' 2,500 Amp Switchboard with Multiple Mains: 3P-800A, Type ‘
3P-600A, Type ‘
3P-200A, Type ‘FXD’
Provisions for 3 future main breakers.
Manufactured Date: February 2010

2. Observations and Potential Risks for Auditorium:

a. Transformer ‘T08' has loop feed primary with 18 KV elbow type surge arresters connected to one side. 9 KV surge arresters are generally recommended for use on 7,200/12,470 Volt, Wye connected distribution systems and will provide better protection of the transformer from voltage surges.

N. USDC Campus Main

1. The main campus electrical service was upgraded in 2012 as part of a Rocky Mountain Power project to relocate existing overhead lines to underground along 900 East Street. The upgrade included removal of the existing primary service power pole and installation of a new primary metering cabinet by Rocky Mountain Power and new air insulated interrupter Switching Station 'S01'.

<u>USDC Campus Main Equipment Information:</u>

Metering Cabinet is owned by Rocky Mountain Power. Specific information is not available.

Switching Station 'S01':

Manufacturer:	S&C Electric Company
Catalog Number:	55172R4-M2M3
Type:	PMH-12
Serial Number:	077418

2. Observations and Potential Risks USDC Campus Main:

   a. No safety issues or code violations were noted at the USDC Campus Main Service Switching Station.

O. Primary Distribution Medium Voltage Feeders

1. Most medium voltage feeder conductors for the campus 12,470/7,200 Volt primary distribution system are installed as single conductors in underground concrete encased electrical duct banks.

2. Medium voltage feeders are also installed in Tunnel A as a 3 conductor Type MV Metal Clad Cable with ground and overall PVC jacket and in Tunnels C, D, and E as single conductors in rigid steel conduit.

3. See electrical drawings included in Electrical Appendix E-5 for approximate locations and additional details for the primary distribution medium voltage feeders.

4. Observations and Potential Risks for Medium Voltage Feeders:

   a. Most medium voltage conductors appear to be original installation with the equipment and transformers they serve and are estimated to be between 30 and 40 years old, or older.

   b. Some newer conductors are existing at the G&W SF_6 Insulated Vacuum Interrupter Switches installed to replace the original oil insulated switches at the Chiller and Electrical Buildings, but the new cable has been spliced to the existing conductors at the locations of the original oil insulated switches. There is an additional conductor splice in Manhole 'MH6' to transition from 3 single conductors in conduit to the metal clad cable used to serve the Heating Plant Transformer 'T08'.

      (1) The conductor splices create another possible failure point for the conductors since most medium voltage cable failures occur at the terminations and splices where the electrical stresses are highest.

P. Distribution Transformers Summary

1. The campus distribution transformers appear to be adequately sized for the demand load at the buildings. This is primarily due to the practice of sizing the transformer for the connected electrical loads at the time of construction rather than the expected electrical demand for the building.

    a. The advantage of this practice is that the transformer can easily accommodate future electrical loads or building additions.

    b. The disadvantage is that the larger transformers have higher losses which increases the electrical utility costs. Although this cost may be minor for individual transformers, it can have an impact on a distribution system with a large quantity of transformers.

    c. The utility cost savings would not justify the cost of replacing a transformer solely for the utility cost savings, but consideration should be given to more closely matching the transformer size to the expected demand, with allowance for future electrical loads, when replacing transformers or sizing transformers for new installations.

2. The oldest transformers on campus appear to Transformers 'T05' in the Electrical Building, installed with the original building construction in 1964. The transformer are approximately 48 years old.

    a. IEEE C57-1995, Guide for Loading Mineral-Oil-Immersed Transformers suggests that the nominal life of a transformer is 180,000 hours or about 22.5 years. This is based on a standard 65^0 C rise transformer operating continuously at full load in a 30^0 C (86^0 F) ambient temperature and the hot spot rise on the windings not exceeding 110^0 C (230^0 F). Transformers operated at less than full load, resulting in a lower temperature for the hot spot rise on windings, will have a significant increase in transformer life, up to 40 or 50 years.

    b. Since transformers on the campus are typically not operated continuously at full load as described above, the life expectancy of the campus distribution transformers, with proper maintenance, can be significantly longer than the nominal 22.5 years.

    c. Consideration should be given to replacing any transformers more than 30 years old as part of major building remodels or additions, or if there is a significant increase in the electrical load on the transformer.

3. Pad mounted transformers located outdoors are generally live front design with exposed conductor termination and fuses in the primary compartment. National Electrical Safety Code (NESC) Rule 381G requires that there be two separate conscious acts to gain access to live parts over 600 volts in pad mounted and other above ground equipment: 1) open a locked enclosure, and 2) opening a door or removal of a barrier.

    a. The existing live front transformers technically meet the NESC Rule requiring the low voltage door to be opened prior to accessing the primary compartment with the medium voltage conductor terminations and fuses. However, the exposed live conductors still present a serious risk for severe electrical shock to maintenance personnel working on the transformer.

b. Considering the risks and age of the live transformers, they are all recommended for replacement.

c. New transformers should be of dead front design with a less flammable, biodegradable insulating liquid such as Cooper Envirotemp FR3. This insulating liquid does not deteriorate the insulating paper to the same degree as standard mineral oil and can significantly extend the transformer life.

Q. Distribution Equipment Summary

1. There are several different types of switches and overcurrent protective devices used in the campus medium voltage distribution system including air insulated fused interrupter switches, SF_6 insulated vacuum interrupter switches, oil insulated loop feed switches, and oil insulated fused switches.

2. One air insulated fused interrupter switches is used for the Main Campus Switch 'S01'. The switch appears to be properly installed and is of current design and replacement parts and fuses should be readily available. Replacement of this switch is not recommended.

3. The SF_6 vacuum interrupter switches at the Chiller Building and Electrical Building are all manufactured by G & W Electric and all appear to be current design. Replacement parts, service, and support are available and replacement of these switches has not been recommended.

4. Vault style oil insulated switches are located in Recreation Electrical Vault, Evergreen Transformer Vault, and Office of Family Services Transformer Vault. All of these switches were manufactured by G & W Electric.

   a. G & W Electric discontinued manufacture of oil insulated switches in 1991 in favor of SF_6 insulated switches and no longer provides parts, service, or support for any oil insulated switches. See Electrical Appendix E.1, Copy of Letters from G & W Electric regarding their oil insulated switches.

   b. The oil insulated switches are required by the National Electric Code to be installed in vaults with a 3 hour fire rating, and any oil leaks which can possibly cause environmental problems may need to be reported to local and/or federal authorities.

   c. All vault style switches have been given the highest priority for replacement considering that any failure of a switch will not be able to be easily repaired and due to the environmental hazards associated with the oil.

5. Replacement distribution system switches will need to be of a compact design in order physically fit in space of the existing oil insulated switches. This will require the use of vacuum interrupter switches in which the make and break arcing currents are extinguished in a sealed vacuum bottle, or similar method. The best options currently available for insulation medium in vacuum interrupter switches are SF_6, and Solid Dielectric.

   a. SF_6 (Sulfur Hexafluoride) has excellent insulating characteristics. It is

non-flammable, non-toxic, and inert. SF_6 is a greenhouse gas with a global warming potential 23,900 times that of carbon dioxide and an atmospheric life 3,200 years. Because SF_6 only comprises a very small percentage of greenhouse gases it is not a major contributor to global warming and switchgear manufacturers have generally accepted it has the preferred insulation medium. In 1999 the Environmental Protection Agency established The SF_6 Emission Reduction Partnership for Electric Power Systems and is actively working with electric manufacturers and utilities, including PacifCorp, to reduce the emissions of SF_6 gas into the atmosphere. Emissions have been reduced by 73% from 1999 to 2010 as indicated the EPA 2010 Annual Report on SF_6 Emissions Reduction included in Electrical Appendix E.2.

(1) SF_6 insulation should be considered as the primary choice for new switches as the current industry standard.

b. Some switchgear manufacturers now offer solid dielectric insulated switches. The solid insulation does not have any environmental, health, fire, or similar hazards. The cost of solid dielectric insulation however can double the cost of switchgear. Some cost saving is realized in installation costs since the switchgear is not as heavy as oil or SF_6 insulated switches, but the overall cost is significantly more.

(1) Solid dielectric switches should be considered as an alternative to SF_6 insulated switches where the budget will allow.

R. USDC Campus Electrical Load Evaluation

1. The existing radial feed backbone conductors from the Main Campus Switching Station ‘S01' to the Chiller Building Switch ‘S02', and to Electrical Building Switch ‘S03' are #1/0 AWG, 15 KV conductors rated for 195 Amperes or approximately 4,200 KVA.

2. Radial feed tap conductors from the backbone feeder switches to other switches and to individual transformers are #2 15 KV conductors rated for 150 Amperes or approximately 3,240 KVA.

   a. The above conductor ampere ratings are based on three single conductors in conduit, isolated in air. The ampere rating will vary depending on installation method such as underground, in cable, etc, and ambient temperature. Refer NEC 310.60 for additional information.

3. It is not expected that the electrical demand for the USDC Campus will exceed the capacity of the existing primary distribution conductors in the foreseeable future.

S. Electrical Distribution System Summary

1. In general, the existing primary electrical distribution system is adequate to meet the present needs of the Utah State Developmental Center Campus. However, there are some existing portions of the system that need to be upgraded to provide better system reliability, reduce the risk of failure, and improve safety for maintenance personnel. These recommended improvements, in order of priority, include:

a. Replace existing Oil Insulated switches and transformers in Evergreen (with Therapy and Administration transformers), Recreation, and Office of Family Services.

b. Replace existing transformers and secondary distribution panel at the Electrical Buildings.

c. Remove existing overhead power line and reconnect Twin Home #4 to the underground distribution system.

d. Replace existing Live Front Pad Mount Transformers at Laundry, Chiller Building, and Phase I, II, & III Buildings.

e. Replace existing medium voltage feeder conductors associated with all equipment and transformers which are replaced.

f. Additional miscellaneous improvements determined during design and/or construction of the electrical improvements, such as replacing surge arresters with properly rated surge arresters.

6.3 Recommendations for Electrical Systems

A. Tunnel Lighting System:

1. Replace all existing tunnel lighting with new linear fluorescent light fixtures with electronic ballasts and T8 lamps. Fixtures should be of an enclosed and gasketed type with Fiberglass Reinforced Polyester (FRP) housing and Polycarbonate lens to resist corrosion and damage.

2. Fixture spacing should not exceed 20 feet on center to provide adequate illumination for safety and maintenance or work activities. Fixture spacing may need to be increased in order to meet International Energy Conservation Code requirements for allowed watts per square foot.

3. Provide new 3 and 4 way switching as required to ensure that switching is available at each tunnel entrance and intersection. Pilot light switches are recommended to assist in locating switches.

4. All new lighting should be connected to generator backup emergency or standby panelboards in adjacent buildings so that lighting will be available during power outages.

B. Tunnel Receptacles:

1. Add new receptacles throughout the existing tunnels for use in maintenance of the tunnel utility systems. Receptacles should be spaced between 40 and 60 feet on center.

2. New receptacles should be listed weather-resistant type and provided with ground fault circuit interrupters considering the damp and sometimes wet location nature of the tunnels.

C. Tunnel Conduit Systems:

1. Identify and remove all abandoned conduit systems.

2. Identify and replace existing conduit which has been damaged by corrosion or excessive

heat and replace wiring to adjacent termination points.

3. Install new conduit on “Minerallac” type support clamps which will provide a space between the conduit and the wall or ceiling to avoid further corrosion. An isolation material such as Unistrut “Unicushion” can be added to the conduit clamps to further prevent corrosion of the conduit.

4. Replace corroded sheet metal outlet and junction boxes with cast metal boxes and fitted with gasketed coverplates.

5. Replace existing Type ‘MC’ (Metal Clad) Cable used for branch circuits with new single conductor wiring in approved raceway systems.

D. Tunnel Communication Cables:

1. Identify and remove all abandoned communication cables.

2. Relocate and re-support existing communication cables which are not supported or are supported from existing conduit or piping systems.

3. Provide cable tray system for communication cables where physical space allows in existing tunnels and in all new tunnels.

E. Medium Voltage Feeder Conduits:

1. Clean and paint corroded medium voltage pullboxes with a high quality corrosion inhibiting paint and replace the pullbox covers.

2. Properly support the medium voltage cable in Tunnel A.

3. Conduct an infrared scan of all medium voltage cable splices to determine if the splices have an elevated temperature which could indicate an immanent cable failure. The infrared scan could be expanded to include all medium voltage conductor terminations at switches and transformers.

4. Replace existing medium voltage conductors where existing pullboxes, conduit, or cable tray is replaced. Some of the conductors are original installation and may be up to 40 years old, near the end of their useful life.

   a. Consideration should be given to using Type MC, Metal Clad cable in the tunnels, such as used for the Heating Plant feeder, rather than using conventional single conductors in conduit. The metal clad cable can be installed continuous without splice between termination points, is easily routed around obstructions, and can be installed while leaving the existing conductors in place which significantly reduces the amount of time required for power outages.

F. New Tunnel Electrical Construction:

1. New tunnel electrical construction should include lighting and receptacles as indicated above for upgrade of existing tunnels.

2. The following electrical systems will need to be installed in new tunnels and removed from the existing tunnels where existing tunnels are replaced:

   a. Fire Alarm System Campus Network wiring and conduit.

b. Communication cables. New cable tray to be installed for communication cables.

c. Medium Voltage Feeders from Chiller Plant Switch ‘S02' to:
   (1) Electrical Building Switch ‘S03'
   (2) Phase I Transformer ‘T02'
   (3) Phase III Transformer ‘T04'

d. Medium Voltage Feeder from Recreation Electrical Vault Switch ‘S06' to Heating Plant Transformer ‘T08'.

e. Secondary Feeders from Transformer “T02' to Phase I Buildings Oakridge, Sunset, and Quailrun and generator backup feeders to the same buildings.

   (1) New disconnecting means may be required at each building. See Electrical Distribution System Phase I Building Evaluation.

f. Secondary Feeder from Electrical Building Switchboard to Pineridge, portion of which is run in Tunnel B.

G. Evergreen, Medical Services, Therapy, and Administration:

1. Replace existing oil insulated switches ‘S10', ‘S11', and ‘S12' with a new vacuum interrupter switch. The number of switched ways should include at least one spare switch for future growth. See the Distribution Equipment Summary for additional information.

2. The new vacuum interrupter switch could be installed to replace existing Switches ‘S10' and ‘S11' but equipment access and working clearances in the transformer vault would not be provided. A new pad mounted vacuum interrupter switch located outside the building would provide the best equipment access.

3. Replace Transformers ‘T10' and ‘T11' with a new pad mount distribution transformer outside the building. A new secondary service distribution panel would also be required along with new feeder conductors to the existing automatic transfer switch and the chiller distribution panel.

   a. Removing the existing transformers from the existing transformer vault should allow installation of the new vacuum interrupter switch in the transformer vault, but installing the vacuum interrupter switch outside will still provide better access for the new switch.

4. Increase the transformer and secondary service size to allow removal the Administration and Therapy Transformers ‘T12' and ‘T13' and connect the Administration and Therapy Building Electrical secondary electrical services to provide a single electrical service for the single building structure.

H. Recreation Electrical Vault:

1. Replace existing oil insulated switches ‘S05', ‘S06', ‘S07', ‘S08', and ‘S09' with a new vacuum interrupter switch. The number of switched ways should include additional switched ways to replace the existing load break junction and provide at least one spare switch for future growth. See the Distribution Equipment Summary for additional information.

2. Space is very limited in the existing electrical vault. Recommend that a new pad mount style switch be installed outside near the existing well pump building. This will also allow

demolition of the building as recommended by the campus master planning.

a. Existing feeders can be reconnected through existing Manhole ‘MH4' except feeder to Auditorium Transformer ‘T14' which will require a new concrete encased underground ductbank. Spare conduits should be included from the new switch to the existing manhole to allow future growth.

b. The new outside switch could also support a new pad mount transformer to serve the existing Well Pump currently served from Electrical Building Transformer ‘T06'. See Electrical Building recommendations below for additional information.

I. Division of Child and Family Services (DCFS):

1. Replace Fused Oil Switch ‘S13' with a new vacuum interrupter switch. The number of switched ways should include at least one spare switch for future growth.

a. Space in very limited in the existing transformer vault. The new switch should include motorized switch operators to minimize potential risks associated with closing the switches into an electrical fault, or a new pad mounted switch could be installed outside the building.

b. Upgrade of the transformer vault may also be required to comply with access requirements of NEC 110.33. The door should be changed to swing out and equipped with panic hardware as a minimum.

2. Replace existing transformers with new transformers of the same ratings.

a. Consideration should be given to installing a new pad mount transformer outside the building to provide better access for maintenance.

3. Reroute existing secondary feeder conductors out of the cable tray with the unprotected service entrance conductors. This could be accomplished by adding a new cable tray system above or below the existing cable tray system.

4. Consider installing underground medium voltage conduit ductbank from new DCFS Switch ‘S13' to new Evergreen Switch ‘S10' along 900 East Street with manhole for future extension back to the Main Campus Switch ‘S01' in order to create a distribution loop around the campus. A distribution loop will allow sections of the main distribution system to be isolated for maintenance or repairs while keeping power available to the remainder of the campus.

J. Electrical Building:

1. Replace existing Transformer ‘T05' with new transformer due to the age of the existing transformers.

a. Consideration should be given to providing a new pad mount distribution transformer outside the building. Removal of the existing transformers from the building will provide better access and clearance for existing Well Pump Transformer ‘T06' which can remain in the building.

2. Replace the existing distribution panel with new distribution panel also located outside the building. The interior should be removed from the existing distribution panel and the enclosure used to make splices to existing feeder conductors.

a. This item should be included to improve electrical safety for short circuit interrupting

ratings and reduce arc-flash hazards.

3. Replace existing Transformer ‘T06' with new transformers of the same ratings due to the age of the existing transformers.

    a. Consideration should be given to providing a new pad mount distribution transformer outside the Well Pump building and connecting to the exterior new pad mounted vacuum interrupter switch recommended for the Recreation Building.

4. Replace 12 KV surge arresters on Switch ‘S03' with 9 KV Surge Arresters to improve protection of the cable and switch from voltage surges.

K. Overhead Power Line:

1. Remove pole mount Transformer ‘TP1' and reconnect existing irrigation sprinkler controllers to a branch circuit from Mountainview/TLC, or the sprinkler controllers can be relocated to the nearest available building and reconnected.

2. Provide new underground feeder to reconnect Twin Home #4 Transformer ‘TH2' to the loop feed primary of Twin Homes Transformer ‘TH1' or to spare fusible switch at Main Campus Switch ‘S01'.

    a. Consider installation of new 3 phase underground primary from Switch ‘S03' at Electrical Building, or Main Campus Switch ‘S01' with provisions for future campus growth.

3. Remove overhead power line due to age, poor condition, and limited use. Existing poles could remain where necessary for existing communication cables.

L. Chiller Building

1. Replace existing live front transformer ‘T01' with a new dead front transformer with primary bayonet fusing. A main circuit breaker will also be required in the secondary compartment so that unprotected secondary service conductors do not enter the Chiller Building.

2. Replace 12 KV surge arresters on Switch ‘S03' with 9 KV Surge Arresters to improve protection of the cable and switch from voltage surges.

M. Phase I (Quailrun, Sunset, and Oakridge)

1. Replace existing live front transformer ‘T02' with a new dead front transformer with primary bayonet fusing. Feeder overcurrent protection should be provided by existing Interrupter Switch ‘S02' at the Chiller Building and coordinated with the transformer primary fusing.

    a. It is recommended that the existing medium voltage conductors be replaced from the interrupter switch to the transformer. The conductors may have been spliced at the Chiller Building. Also existing stress cone terminations at the transformer will need to be replaced with load break elbow terminations and the conductors may not be long enough for this connection without splicing on additional conductor creating another point for possible cable failure.

2. Add disconnecting means for each building at the nearest point of the outside feeder conductors entrance into the building.

    a. This item may not be required if the feeder conductors are not disturbed as part of the Utility Tunnel improvements or if the AHJ will accept the existing disconnecting means

under NEC 225.32, Exception No. 1.

N. Phase II (Willow Creek and Raintree)

1. Replace existing live front transformer ‘T03' with a new dead front transformer with primary bayonet fusing. Feeder overcurrent protection should be provided by existing Interrupter Switch ‘S02' at the Chiller Building and coordinated with the transformer primary fusing.

    a. It is recommended that the existing medium voltage conductors be replaced from the interrupter switch to the transformer. The conductors may have been spliced at the Chiller Building. Also existing stress cone terminations at the transformer will need to be replaced with load break elbow terminations and the conductors may not be long enough for this connection without splicing on additional conductor creating another point for possible cable failure.

O. Phase III (Pleasant View, Cottonwood, and Aspen)

1. Replace existing live front transformer ‘T04' with a new dead front transformer with primary bayonet fusing. Feeder overcurrent protection should be provided by existing Interrupter Switch ‘S02' at the Chiller Building and coordinated with the transformer primary fusing.

    a. It is recommended that the existing medium voltage conductors be replaced from the interrupter switch to the transformer. The conductors may have been spliced at the Chiller Building. Also existing stress cone terminations at the transformer will need to be replaced with load break elbow terminations and the conductors may not be long enough for this connection without splicing on additional conductor creating another point for possible cable failure.

P. Maintenance (Laundry) Building

1. Replace existing live front transformer ‘T07' with a new dead front transformer with primary bayonet fusing. Feeder overcurrent protection should be provided by existing Interrupter Switch ‘S03' at the Electrical Building and coordinated with the transformer primary fusing.

    a. It is recommended that the existing medium voltage conductors be replaced from the interrupter switch to the transformer. The conductors may have been spliced at the Electrical Building. Also existing stress cone terminations at the transformer will need to be replaced with load break elbow terminations and the conductors may not be long enough for this connection without splicing on additional conductor creating another point for possible cable failure.

Q. Auditorium:

1. Replace 15 KV surge arresters on Transformer ‘T14' with 9 KV Surge Arresters to improve protection of the transformer from voltage surges.

R. Heat Plant:

1. Replace 18 KV surge arresters on Transformer ‘T08' with 9 KV Surge Arresters to improve protection of the transformer from voltage surges.

S. USDC Campus Main

1. There are not any improvements or upgrades recommended for the USDC Campus Main.

T. Primary Distribution Medium Voltage Feeders

1. Replace existing medium voltage feeder conductors along with associated equipment and transformers served by the conductors.

    a. New conductors are recommended rather than splices where necessary to proper length of conductor for new terminations. Splices create a weak point in the conductors which are subject to failure.

U. Maintenance and Training Recommendations

1. Regular inspection and maintenance of electrical equipment should be performed on a regular basis as is usually performed on other utility systems. Unfortunately, this inspection and maintenance for electrical equipment is often overlooked since there are not any moving parts for most electrical equipment. Failure of electrical equipment is inconvenient at the least, and can be serious when a campus wide power outage occurs or if the failure results in personal injury.

2. Annual inspection of medium voltage equipment should include the following as a minimum, with maintenance repairs made as required:

    a. Visual inspection of the exterior of equipment enclosures for integrity, corrosion, scratches, damaged safety and warning labels, etc..

    b. Equipment interiors should be inspected for dirt accumulation especially on insulators, bushings and terminations, insect infiltration such as spider webs or bee nests, etc..

    c. Conductor terminations, including grounding conductors, should be checked for tightness and properly torqued when required. Conductor terminations and spices should be checked for excessive temperature with infrared camera or remote reading thermometer.

    d. Gas or liquid insulated equipment and transformer gauges should be checked for abnormal readings. This may include liquid level gauges, temperature gauges, vacuum/pressure gauges, etc., as furnished with the equipment. All gauge readings should be kept in a maintenance log to track trends which may indicate possible equipment failure. Any “drag hands” on the gauges should be reset after entering the reading into the maintenance log.

    e. Insulating liquid should be checked annually for dielectric strength as a minimum. Optional tests may include dissolved gas analysis, and moisture content. Flash and fire points test may also be included for less-flammable liquid insulated transformers and equipment.

3. Maintenance on medium voltage equipment should be performed only by personnel specifically trained for work on medium voltage systems. Safety precautions and working methods can significantly differ from system below 600 volts.

    a. Many medium voltage equipment manufacturers and associations offer training courses which may be specific to the manufacturer’s equipment or of a generic nature. Two samples of electrical safety training courses from IEEE and S & C Electrical Company are included in Electrical Appendix E.3.

    b. Formal education is also offered by Salt Lake Community College in their Electric Power Technology program course. Although the program is designed for electric utility lineworkers, the Workplace Safety/OSHA 3095 course could be very beneficial

for USDC electricians who are required to work in areas with medium voltage equipment. See Electrical Appendix E.4.

McNeil Group
8610 South Sandy Parkway, Suite 200
Sandy, Utah 84070

SECTION 7

EVALUATION OF CAMPUS DOMESTIC WATER DISTRIBUTION SYSTEM.

A water distribution system is a complex engineering and ecological system wherein multiple factors should be considered when determining when to replace a particular section of pipe. One of the key components of infrastructure assessment is the estimate of the useful life of the asset. When is it time to replace the pipe? The decision to replace a pipe should not be limited to its age alone. Other factors to consider are the type of pipe material, types of joints, inner and outer coatings (20% of ductile iron pipes nationwide have asbestos linings), pipe velocities, whether it is buried in corrosive soils or in a humid tunnel, whether or not the pipe has an electrical charge on it. Premature deterioration of any pipe type may result if subjected to any one or combination of these environmental conditions.

The issues considered for prioritization of pipe replacement stem directly from nine white papers created during a series of expert and stakeholder workshops convened by the EPA, AWWA and others from 2000 to 2003. The nine white papers focused on the following events or conditions that can bring about water quality degradation in public water supply distribution systems:

1. Cross-Connections and Backflow
2. Intrusion of Contaminants from Pressure Transients
3. Nitrification
4. Permeation and Leaching
5. Microbial Growth and Biofilms
6. New or Repaired Water Mains
7. Finished Water Storage Facilities
8. Water Age
9. Deteriorating Buried Infrastructure

Of the issues presented in the nine white papers, cross connections and backflow, new or repaired water mains, and finished water storage facilities were judged by the committee to be of the highest importance based on their associated potential health risks. Finished water storage facilities are outside the subject property and are not a focus of this report. In addition, there are two other issues that should also be accorded high priority: premise plumbing and distribution system operator training, each are discussed below. Deteriorating infrastructure, although not included on the high priority list is also a major concern because it is the ultimate cause of many of the other events that are listed above.

This evaluation and recommendation focuses primarily on areas directly under the control of the on-site DFCM staff. 1) Cross connection and backflow, 6) New or repaired water mains and 9) Deterioration of buried infrastructure. Additionally, Fire Supply is also discussed below as it relates to the campus water system. This report will briefly explain the role each topic plays in planning for future infrastructure upgrades in order to maintain a safe water system for the campus .

The remaining topics, although important to safe water quality are controllable to a lesser extent by on-site staff and are only discussed briefly as they pertain to maintaining and operating the campus water infrastructure over the life of the project.

A color coded record map of the campus water system has been assembled based on documents provided by the state and can be found in the appendix. The referenced documents include: construction documents for waterline replacement projects over several decades: a master plan document with the age of all buildings; and a partial record water and fire line document from 1995. Waterlines shown in red are generally the highest priority, with orange being next. Detailed recommendations along with estimated cost are shown in section 8.5.

Cross Connection and Backflow

Points in a plumbing system where non-potable water comes into contact with the potable water supply are called cross connections. A backflow event occurs when non-potable water flows into the drinking water supply through a cross connection, either because of faulty or no back flow prevention devices, low distribution system pressure (termed backsiphonage) or because of pressure on the non-potable water caused by pumpage or other factors (termed backpressure). Backflow incidents have long been recognized as significant contributors to waterborne disease. Although most state and primacy agencies require that utilities have a cross connection control program, the elements of such programs, their implementation, and oversight vary widely leaving the possibility for contamination to occur. Periodic changes to the operation of the distribution system, such as valving the local water system to shut down mains for work and then reloading the mains before their return to use, can allow for contamination of the drinking water supply from backflow through unprotected domestic and fire connection services

Proven technologies and procedures are available to mitigate the impact of cross connections on potable water quality. State plumbing codes define the type of plumbing materials that are approved for use, including cross connection control devices. A copy of the "Cross Connection Control Program of Utah" is included in the Appendix that covers all applicable laws, regulations, codes approved devices and assembly testing frequency.

Deterioration of Buried Infrastructure - New Waterline Replacement

This section focuses on deterioration of underground infrastructure and contamination arising from the exposure of distribution system water and pipe interior, appurtenances, and related materials to microbial and chemical contaminants in the external environment (1) during water main failures and breaks and (2) due to human activities to install new, rehabilitate old, or repair broken mains and appurtenances.

Ensuring safe distribution of treated water to users requires, among other measures, protection from intrusion of contaminants into the distribution system during low pressure transients. Intrusion refers to the flow of non-potable water into drinking water mains through leaks, cracks, submerged air valves, faulty seals, and other openings resulting from low or negative pressures. Transient pressure regimes are inevitable; all systems will, at some time, be started up, switched off, or undergo rapid flow changes such as those caused by hydrant flushing, and they will likely experience the effects of human errors, equipment breakdowns, earthquakes, or other risky disturbances. Transient events can have significant water quality and health implications. These events can generate high intensities of fluid shear and may cause re-suspension of settled particles as well as biofilm detachment. Moreover, a low-pressure transient event, arising for example from a power failure or intermittent/interrupted supply, has the potential to cause the intrusion of contaminated groundwater into pipes with leaky joints or cracks. When a pipe break or failure occurs, there is immediate potential for external contamination from soil, groundwater, or surface runoff to enter the distribution system or come into contact with the pipe interior.

Although soil sampling was not in the scope of this report, where there are toxic chemicals (waste oil, diesel/gas fuel tanks, cleaning chemicals, paints and solvents) stored onsite care should be taken to ensure their containment. Any areas suspected to be contaminated should be evaluated and remediated if necessary to prevent further contamination of the soil and possibly the water system. Permeation in water distribution systems occurs when contaminants external to the pipe materials and non-metallic joints pass through these materials into the drinking water. Permeation is generally associated with plastic non-metallic pipes. The contaminants that are most commonly found to permeate plastic pipes are organic chemicals that are lipophilic and non-polar such as highly volatile hydrocarbons and organic solvents found in substances listed above. These chemicals can readily diffuse through the plastic pipe matrix, alter the plastic material, and migrate into the water within the pipe.

The chemical and microbial contamination of distribution system materials and drinking water during mains breaks and during the installation, rehabilitation, and repair of water mains and appurtenances is a high priority issue. There have been many documented instances of significant health impacts from drinking water contamination

associated with pipe failures and maintenance activities. The improved application of best practices, and operator training and certification, can reduce this risk. Training and certification of one or more of the property maintenance staff would provide a great benefit. A knowledgeable staff can reduce the risk of contamination from a wide variety of sources as well as saving the facility money in the long run by averting costly problems.

Thus, when a new main is installed or a valve is repaired, it is advisable to act as if some level of contamination has occurred to both the water and the materials. In both cases testing is required, and care should betaken to address potential contamination before the affected portion of the water system is returned to use. Flushing of the main line adjacent to a repair or new section of pipe is highly recommended to removed any contamination that may have entered the system while the pressure was low or from particulate matter that may have broken loose from pipe walls when the system was recharged. AWWA and ANSI provide standards to protect the heath and safety of the community ANSI/AWWA standards, particularly C600-99 for the installation of ductile iron mains and C605-05 for pvc mains should be strictly adhered to, and AWWA C651-99 for the disinfection of mains should always be employed to prevent microbial contamination during main rehabilitation and replacement.

The complex nature of a water system makes it prudent choice to have one or more staff members trained in water system operation. Properly trained personnel will be able to oversee construction and maintenance projects and be on the lookout for possible contamination sources, ultimately providing a cost savings as well as improving water quality. A copy of the Utah Water Operator Certification Program can be found in the appendix which gives exam dates and key information to become certified. This program is managed by the Department of Environmental Quality-Drinking Water.

SECTION 7

RECOMMENDATIONS AND MASTER PLAN

Cross Connections and Backflow

Short Term Planning 1-5 Years (2013-2018)

Cross connection and improper backflow devices are a leading cause of water born illness, for that reason it should be prioritized when considering upgrading infrastructure. New policy should be considered that requires building inspections for all structures and irrigation connections on campus . A study performed By USC in Southern California of 180 homes found almost all had a code violation and approximately 10% of the violations constituted a health hazard. This problem is widespread nationwide and is frequently over looked

Detailed internal inspection of all plumbing within structures should be performed by qualified personnel to identify any sources of cross connection and contamination. A report should be obtained documenting any cross connection occurrences. this report should also contain a listing of the material type and approximated age of the pipe. Any cross connections that are a health hazard should be removed immediately. The report should also include a detailed analysis of water samples taken from each structure. This will help to identify any areas of concern and will also serve as a baseline for future testing to be compared against. Any building with a water sample that has components exceeding the EPA recommended MCL's (Maximum Contaminant Levels) should be investigated thoroughly to determine the source of contamination. Several companies providing water quality testing are shown below.

Water Testing Utah
877 E 1200 S
Orem, Utah 84097
801-872-9778

Water Environmental Testing
235 W 400 S
American Fork, Utah 84003
801-763-0660

Ellis Environmental
410 East State Street
Lehi, Utah 84043
801-768-0675

Inspection, cleaning and testing of all irrigation cross connection control devices (back flow preventers) should be performed as soon as reasonably possible to ensure all applicable state plumbing codes are being complied with. A record book should be kept which contains the following: all known irrigation connection points along with a map, each unit should be assigned a number; a log book should be kept which includes the unit number, dates of last inspection and service and install date of the new device if applicable.

In the short term, inspections, cleaning and device testing can be accomplished by hiring an outside contractor to provide these services for all irrigation system connections. Several companies providing backflow testing and cleaning services are shown below. Any irrigation connection that does not meeting state code or is visibly damaged should be brought into compliance with code and be replaced promptly. Each existing device to remain should be tested and cleaned to ensure it is functioning properly. Consideration should be made to replace any cross connection control device installed before 1990. Accumulation of hard water and corrosion on internal components can cause devices to loose effectiveness over time even if the exterior appears to be in good condition..

Wilder Backflow Testing
West Jordan Utah
Jess Wilder
801-230-1681

Action Plumbing
1440 W 8120 S
West Jordan, Utah 84088
866-688-9774

Dun-rite Backflow Service
Brian 801-815-5893
brian@dunritebackflow.com

Estimated Cost for Cross Connection Inspection Testing and Maintenance
The estimated cost of testing all structures and irrigation backflow devices for cross connection, including the servicing and maintenance of the backflow preventers over the next 5 years is $100,000.

Long Term Planning 5-20 years (2018-2033)

Cross connection is a serious issue, over the life of the facility there would be a large benefit to have one or more DFCM staff members trained and certified in backflow prevention and cross connection. This would allow staff to oversee and review any new construction projects on campus for cross connection issues. It would also provide a way to implement a program for regular testing, cleaning and inspection of existing cross connection control devices.

Training programs and certification classes are available through the Utah Department of Environmental Quality to train and certify backflow device installers and testers. Below is a list of available courses in our area. Contact Mike Moss 801-536-0089 with DEQ for more information on the courses.

BACKFLOW TECHNICIAN CERTIFICATION / RECERTIFICATION COURSE
Utah Schedule 2013

Rural Water Association of Utah
76 East Red Pine
Alpine, Utah 84004
Call: (801) 756-5123
Register Online: www.rwau.net/training.html

Class I Certification
Oct 15-18, 2013 Lehi, UT

Class II Tester Certification Class:
Sep 16-20, 2013 Lehi, UT
Oct 28 to Nov 1, 2013 St George, UT
Dec 9-13, 2013 Ogden, UT

Class II Tester Re-certification Class:
Sep 9-11, 2013 Lehi, UT
Oct 28 to Nov 1, 2013 St George, UT
Dec 3-5, 2013 Ogden, UT
Dec 11-13, 2013 Ogden, UT

Class I Re-Certification
Oct 7-9, 2013 Lehi, UT

Backflow Training Services
2071 West Byron Circle
West Valley City UT 84119
Call to Register:
(801) 554-6052
Pay Online:
www.backflowtrainingservices.com
Location:

Salt Lake Community College
Miller Campus
9750 South 300 West
Sandy UT

Class II Tester Certification Class:
Mar 18-22, 2013
May 13-17, 2013
Aug 12-16, 2013
Dec 16-20, 2013

Class I Certification
Mar 19-22, 2013
May 14-17, 2013
Aug 13-16, 2013
Dec 17-20, 2013

Class II Tester Re-certification Class:

Mar 20-22, 2013
May 15-17, 2013
Aug 14-16, 2013
Dec 18-20, 2013

Class I Re-Certification
Mar 20-22, 2013
May 15-17, 2013
Aug 14-16, 2013
Dec 18-20, 2013

Given the availability of proper training and effective technologies for preventing cross connections, opportunity exists for substantial reductions in public health risk through the implementation of more effective cross connection control by properly trained DFCM employees. A continuous program implemented by a properly trained staff will reduce the cost of controlling contamination over the life of the campus and will provide a safer environment for all. Consideration should be given to have at least one staff member join an organization like UTABPA (Utah American Backflow Prevention Association) Membership is open to anyone with an interest in cross-connection control and maintaining water quality standards. ABPA is for the professional who seeks continuing knowledge and up-to-date information in this constantly changing field.

Estimated Cost for Backflow Maintenance and Training
The long term cost of properly training staff and implementing a continual maintenance schedule of backflow prevention inspection, cleaning and replacement is $10,000 per year or $150,000 for the 15 year span.

Deteriorating Water Infrastructure

Short Term Planning 1-5 Years (2013-2018)

The immediate plans for the future should first include replacement of any section of pipe known or suspected to contain contamination within the products themselves. This would be any galvanized pipes or pre 1960's cast iron pipe with lead joints(color coded red). Although galvanized (zinc-coated) pipe is still considered to be a safe transport material for drinking water, there are some potential health concerns if the water supply is corrosive due to its acidic condition (low pH). The concern is not for zinc or iron that may be leaching from the pipe, but for lead and especially cadmium, two other heavy metals that may be present as impurities in the zinc used for the galvanizing process. The primary drinking water standards for lead and cadmium are 0.015 and 0.005 mg/L, respectively. Water testing in the area should be examined for the presence of lead and cadmium. If detected the pipe should be removed from service immediately. The only known galvanized water main is a 4" section of pipe located in the south west corner of the developed site between the Pineridge building and the portable classrooms. This section of pipe has exceeded the typical life spans for galvanized pipe which is about 50 years. Galvanized pipe is more often replaced due to interior deterioration and corrosion (rust colored water) rather than failure.

Structures containing galvanized waterlines should have the water sample closely analyzed for lead and cadmium as well as zinc. A high presence of these contaminants should indicate water line replacement as soon as possible.

There are a several sections of 6" cast iron pipes on the south and west side of the campus installed between 1930 and 1969 (color coded red on the supplied map). Although the exact years of installation are unknown, the newest of these pipes are nearing 50 years old and repair of failures is not a long term cost effective option. The concern in the water industry revolves around the three older vintages of cast iron pipe (pit cast, spun cast, and spun cast with leadite joints) that were primarily installed prior to the 1960's. Lead was used along with rope to seal joints between sections of pipe. Leaching of lead into the water is the primary concern. As technology was thought to be improving the performance of the pipe during this period, it would ultimately be found that the failure rate would increase. The result is that the three vintages of pipe, installed in different time periods, have reached the end of their respective service lives and should be replaced. All replacement pipes should be 8" minimum, PVC C-900 SDR 18 for increased fire flow.

There are (3) sections of 3" and 4" cast iron pipe south and east of Pineridge that should not be replace as they are not servicing Utah Development Center properties. They are labeled on the map as "DO NOT REPLACE DOES NOT SERVICE UDC PROPERTY"

Estimated Cost for Replacement of the Oldest Pipes

There is approximately 900 linear feet of the above mentioned pipe (color coded red) that needs replacing along with mechanical joint fittings, tee's and valves and hydrants. The estimated cost to replace the existing cast iron pipe with new 8" pvc pipe (including the reconnection of the Service Station to the 6" pvc pipe) over the next 5 years is $20,000 per year or $100,000 total over the 5 year span. If the tunnels are re-reconstructed in the next 5 years an additional amount of $50,000 should be budgeted to cover waterlines in the tunnels that will be replaced new and direct buried along side the tunnel including all connections to existing laterals and mains.

Inspections of water pipes within the tunnel systems should occur periodically prior to complete tunnel replacement to monitor pipes and valves until the time when the tunnel is replaced. Valves should be tested yearly minimum to ensure they are functioning. Increased air supply along with heat, moisture and acidic conditions hastens the external corrosion of these pipes, valves and the their hangers. Consideration should be given to replacing these pipes immediately if significant externally corrosion is observed. Any sagging of pipes observed should prioritize the decision to replace that section of pipe. Any new pipes installed should be removed from the tunnels and direct buried. The estimated cost of replacement has been included in the short range planning for pre-1970's pipes and in medium range planning for pipes from the 1970's.

The next area of focus should be any section of cast iron pipe that was installed prior to 1980 known to have had failures. The typical life span for cast iron pipes is 50-75 years which means these pipes are at the end of the their expected life range and failures will be begin to occur more frequently which can be a source of potential contamination. The average cost for a failure is around $4000 and the risk of water contamination grows as the pipe deteriorates due to leaching from the pipe and intrusion from outside contaminants. Specific locations of failures have not been identified in this report rather this is an ongoing practice of replacement that should always occur once a cast iron or pvc pipe is over 50 years old and has had one or more failures. When replacing any water main that has one or more hydrants on it, consideration should be given to upsizing the pipe to 8" minimum diameter for increased fire flow.

Adequate supply of water for fire suppression is a key function of the campus water system. The required amount of water for fighting fires is usually what controls the sizing of pipes for distribution. Careful planning must be utilized to provide the water needed without exceeding recommended velocities in the pipe. To be able to properly evaluate the water distribution system supply capabilities, a computerized water model needs to be developed. This should be a short term goal because it may show glaring deficiencies which would want to be remedied in medium and long range planning. The industry standard for a fire hydrant is 1000 gpm's minimum.

Estimated Cost for a Computer Model

The estimated cost of surveying and flow testing of all available fire hydrants and utilizing the data to create a water model is $20,000.

Fire hydrants are the sentinels of the water system. When cared for properly, they stand ready to provide fire protection year round and throughout all weather conditions. A well serviced hydrant can last 50-100 years. Fire hydrants are also the one aspect of the water system that is viewed by the public each and every day. The condition of the hydrants can reflect strongly upon the overall image of the water system. Initiating a regular hydrant maintenance program will ensure that your hydrants deliver the maximum performance possible.

A hydrant maintenance program should be implemented which includes bi-annual inspections. As part of the first inspection each hydrant should be numbered and flow tested to ensure it is functioning properly and to measure the amount of water it is capable of providing and at what pressure. This flow information will be used in the development of a water model. A fire hydrant dry barrel inspection checklist has been included in the Appendix.

Generally, hydrant maintenance is performed in the spring and fall of the year and often in conjunction with water system flushing. Additionally, during cold weather, hydrants should also be inspected after each use. When possible, using the lateral valve of the hydrant to control flow while flushing or inspecting not only saves wear on the hydrant valve, but also ensures proper operation of the lateral valve. Operation and inspection of each hydrant should include exposing and exercising the lateral valve. Buried valve boxes should be raised to ground level to facilitate the ease of valve operation. Inspection should also include checking for proper drainage. The hydrant can be opened fully (allowing air to escape through a partially opened hose valve) with all caps securely tightened. A partially open hydrant valve will allow water to escape through the drain holes. This technique can be used to clean drain holes but care must be taken not to erode the support around the hydrant base. Inspect the hydrant for leaks around the operating stem and nozzles, at the flanges, and at any seals or packing.

Next, close the hydrant, open the hose valve or cap and allow the hydrant to drain. A properly draining hydrant should drain five feet in approximately twelve minutes. Replace any deteriorated or missing gaskets or O-rings if necessary. Also, clean nozzles with a wire brush and tighten just slightly greater than hand tight. Use food grade oil or grease to lubricate the hydrant stem and nozzle threads.

The positioning and location of hydrant is also of great importance. The distance from the center of the pumper nozzle to the ground should be eighteen inches, allowing for circumferential use of a hydrant wrench. Similarly, the distance from the center of the breakable flange to the ground should be about three inches to ensure the hydrant will break at designed weak points if struck, and to allow the ground to heave in winter without placing stress on the hydrant by pushing the flange. Also, there should be thirty-six inches from the center of the operating nut around the hydrant that is clear of obstruction and allows for ease of operation. The area around your hydrants should be kept free of snow in the winter and vegetation should be trimmed in the summer.

The fire hydrants should also be painted on a regular basis to protect them from the damaging effects of weather, age, and road salt. Also, the bonnets or caps of

your hydrants can be color-coded to reflect the fire flow capability of each hydrant. During fall inspections, all hydrants should again be checked to make sure they are draining properly. Hydrants that won't drain, that are plugged, or that are leaking internally will tend to freeze during the winter months and will be left inoperable. Plugged hydrants or those that do not drain well should have any residual water pumped out of them.

Any fire hydrants found to be inoperable or difficult to operate should be bagged and/or tagged immediately, repair or replacement of the hydrant should then be planned as soon as possible.

In addition to regular inspection and maintenance of the fire hydrants, there are a few items that ought to be kept in stock. For each make of fire hydrant in your system, your water department should keep traffic repair kits. Other items you should consider having on hand include a supply of seats, O-rings, gaskets, bolts and food grade grease or oil. Simple and regular maintenance combined with a little TLC will keep the hydrants in great operating condition throughout the year and will extend their life expectancy significantly. Instituting a hydrant maintenance program will also save your water system money in hydrant replacement costs and will improve the way the community sees your water system.

Estimated Cost

The estimated cost to test, maintain and repair fire hydrants is approximately $7,500 per year or $37,500 total over the 5 year span.

The LDS chapel on-site is connected to the campus water system via 4" cast iron pipes that are near 50 years old. These pipes may not be capable of supplying adequate water supply to any of the hydrants on-site. It is not the responsibility of the UDC campus to upgrade infrastructure associated with this connection. Consideration should be given to having the chapel connect directly to the city's water supply system and terminate their connection with the UDC water system. This would provide the chapel much better fire protection. It would also remove any responsibility the campus has in case there is a fire at the chapel and there is insufficient water supply to fight the fire.

Estimated Cost

The estimated cost to disconnect the LDS Chapel from the UDC water system is approximately $2,000 to cap and block the 4" cast iron pipe. This does not include the cost to install anew water meter and re-connect the Chapel to the city system.

Medium Range Planning 6-10 Years (2019-2023)

The campus water system is connected to the city water supply at 2 locations. The first connection is a 10" PVC pipe that connects to a city supply main in 900 East Street due east of Aspen Hills. The new meter and 10" pvc pipe can supply up to 2500 gpm for culinary supply and fire flows within acceptable velocities (10 ft/s). This connection will be adequate for many years to come. It was installed in 1995 and has a 50-75 year life span. Replacement of this main line shouldn't be considered until 2045 unless an unusual number of failures occur.

The second connection to the city water system is a 6" cast iron pipe (color coded lavender) that supplies the north end of the campus water system west of Oakridge and connects to the city supply in 9600 N and ultimately 900 E Street which is more than 2000 feet to the north and east. Due to the limited size and long length, this pipe has limited effectiveness in supplying water to the campus for fire flows. By 2020 the pipe will be approximately 50 years old and will be past typical minimum life expectancy. Repairs will not be a cost effective solution to any failures that occur. Also future development of the campus to the north would be limited by the capacity of this main. Consideration should be given to upsizing this pipe to a 10" PVC pipe minimum. Review of a water model may provide information that a larger size is recommended based on master planned projected build out densities.

Replacement of this line would also necessitate upsizing of the water meter. Future development would depend on being able to supply any new structures with adequate fire flow protection as required by the IFC. The connection from the existing meter to 900 East Street has also been reported to be a 6" cast iron water line. This section of water line would also need upsizing to fully develop remaining area on the UDC campus. Completion of this north leg of the looped water system would also provide security in case the southern 10" pvc connection had to be removed from service for unforeseen reasons. The system as it currently exists could not supply adequate fire flows if the 10" connection were temporarily out of service. This has life safety implications and therefore should be considered an important upgrade.

Estimated Cost to Replace 6" Cast Iron Pipe with 10" PVC Pipe

The estimated cost to replace approximately 3000 lf 6" Cast Iron Pipe the supplies the north end of the campus with a 10" PVC Pipe and a new 10" water meter is $350,000.

Long Range Planning 10-20 Years (2024-2034)

The area of focus for long range planning should be the cast and ductile iron pipes that were installed in the 1970's on the north and west end of the campus ranging in size from 6" to 8" and are color coded orange on the provided map. These pipes will be approaching 50 years old, the low end of their life expectancy (50 -75 years). Selection of which pipes to be replaced first should be based on fire flow requirements. Primarily, 6" cast iron pipes that are part of the main looping water system used for fire supply lines should be replaced first. A fire hydrant is expected to flow 1000 gpm at minimum, a 6"

water main at this flow has a velocity over 10 feet per second which is considered to be on the high side and will have significant pressure loss, approximately 5 psi for every 100 feet of pipe. Upsizing these 6" pipes to 8" will increase flows to the fire hydrants and individual building fire lines while reducing velocities and pressure loss.

Results of a water model should be evaluated to determine which pipes should be upsized first to provide the greatest benefit to system fire flow capacity as a whole. Fire lines supplying hydrants with low flow rates, less than 1000 gpm's should be prioritized and consideration should be given to adding their replacement to short or medium range planning. Waterlines that are part of a looped system and are critical to fire flow should be replaced with 8" PVC C-900 SDR 18 waterline minimum. The water model will help in selecting the most cost efficient size compared with benefit. Dead end lines should be evaluated individually for required sizing. Fire hydrants on 6" dead end lines should be limited to less than 100 feet or the supply line should be upsized to 8".

Estimated Cost of Replacing Pipes installed in the 1970's

The estimated cost of replacing 1780 lf of the 6" waterlines installed in the 1970's (color coded orange) including reconnecting existing laterals and mains; fittings, thrust blocking, valves and hydrants is $200,000.

Summary

A combination of training, inspections and continual infrastructure replacement is the key maintaining a safe healthy water system. It should be noted that the rate of degradation of distribution system materials will vary from system wide depending on water quality and system operation and maintenance practices, such that the relationship between the age of a given system, its state of deterioration, and risk cannot be easily predicted. Confronting deteriorating infrastructure requires good asset management, including procedures to monitor and assess the condition of the distribution system and water quality changes that occur during distribution. This is where properly trained personnel can be of great benefit. Good record keeping of inspections and testing will help guide future decisions as to prioritization. Furthermore, appropriate maintenance and inspection by certified maintenance staff will help reduce long term replacement costs. Continual replacement should be carried out in a prioritized fashion based on educated decisions and available operating and capital budgets to finance this work.

SECTION 8 – RECOMMENDATIONS AND MASTERPLAN

8.1 Introduction

A. The overall condition of the USDC campus heating, cooling, utility tunnels, electrical utilities, and domestic water is severe. Almost all sections have exceeded their recommended life, and are at serious risk of major failures. Failures in these systems could result in lack of heating, cooling, power, or water at the different buildings for extended periods of time. The majority of these systems are installed in locations that do not allow preventative maintenance to protect against these failures. Many systems are directly buried, and cannot be serviced without major site disruption. Where systems are located in tunnels, the tunnels are inadequate, too small for any type of maintenance, and in some areas structurally dangerous. All of these systems are in desperate need of major renovations and upgrades.

B. The recommendations and cost estimates included are based on 2 different available strategies. The first strategy is to upgrade, repair, and replace these systems in place. The second strategy is to provide new utility tunnels to create a more maintainable long term solution for the campus heating, cooling, electrical, communications, domestic water, and other essential infrastructure systems.

8.2 Mechanical System Recommendations

A. The steam and condensate piping, and the associated piping specialties, including: valves, expansion joints, guides, anchors, supports, and insulation are in severe condition with very few exceptions. The branch tunnel from the boiler plant to tunnel section A that was recently installed is in the best condition. The piping in Trench TR-1, and a portion of the direct buried section DB-5 were also recently replaced. They still have the inherent problems with buried and inaccessible piping, and may or may not have issues with insulation fill material, thermal expansion, etc., but the piping is at least fairly new and should have significant life remaining. Outside of these few locations, the steam and condensate piping is in immediate need of replacement. The steam heating system as a whole should undergo a complete system piping analysis to bring the system up to current design practices.

1. The current condensate return system is a mix of gravity, pumped, and trapped returns, resulting in multiple condensate mains returning to the plant. When replacing the condensate piping, we recommend consolidating all the returns from each building into a single pumped return from each building, as well as a separate trap discharge return line.
2. The replacement steam piping should include a full piping analysis, and should include the expansion joints, guides, and anchors required to accommodate and reduce the stresses associated with thermal expansion.
3. Steam piping should be equipped with adequate traps to ensure the best quality of steam, and protect the piping systems from

condensate hammer. The traps should be accessible for regular inspections and maintenance, in order to maintain the efficiency and functionality of the system.

4. Both the steam and condensate piping should be equipped with strategically located isolation valves. This would allow preventative maintenance, service, and repairs by piping section, without having to take down the entire system for each occurrence.
5. Both steam and condensate piping should be properly insulated in order to maximize effectiveness and efficiency of the system. Direct buried piping should be insulated with Gilsulate 500 or equal to insulate and protect from corrosion. Piping in tunnels should be well insulated, and protected with metal jackets. Valves, expansion joints, etc. should be provided with removable insulation jackets that provide insulation while still allowing access for service.

B. The chilled water piping is in overall poor condition, and needs to be replaced. Unlike the steam piping, not all of the buildings are served by the chilled water system; however, there are 8 buildings that depend on the central chilled water system for their cooling. The corrosion and deterioration of the piping will result in failures, downtime, and loss of cooling if not replaced as soon as possible.

C. The less expensive option to replace the steam, condensate, and chilled water piping would be to replace it in place. Although this would be the lowest first cost, many of the problems with the piping will continue to persist if the location remains the same.

1. The direct buried piping is more difficult to maintain, and subject to more corrosion and deterioration.
2. The current tunnels are in such poor condition, that the piping will continue to corrode without major upgrades to the tunnel structural, ventilation, and drainage systems. Many of these areas currently cannot be accessed or maintained.
3. The biggest drawback with replacing the piping in place is the associated campus downtime. Removing the piping and replacing it in place will take a significant amount of time. During this time, the buildings will not only lose the ability to heat, but they will also lose the ability to produce domestic hot water as this is also reliant on central steam.
4. The cost estimates included in Section 9 include only the cost of replacing the piping, but they do not include the costs associated with providing temporary heating and hot water, or the costs associated with temporary relocation of building tenants and residents.

D. The optimal long term and best solution for the USDC would be to provide new piping within new tunnels. Piping in tunnels is more effective for many reasons.

1. Piping lifespan is significantly increased due to maintainability in controlled environments.

2. Piping systems are more efficient as the insulation can be protected and maintained.
3. Traps can be maintained so that they operate efficient.
4. Components can be repaired or replaced much more efficiently and safely.
5. If new tunnels are provided, they could be provided adjacent to the existing tunnels and buried piping. This would allow the existing systems to continue in operation while the new systems are being installed, resulting in minimal campus system disruption and tenant displacement as the new systems are tied in.

8.3 Structural Recommendations

A. The existing tunnels are in poor condition. The poor condition of the tunnels has a direct effect on the condition and life span of the utilities located within the tunnel. It also creates potential unsafe maintenance conditions, and should be addressed as soon as possible.

B. See Section 5 for the ARW Engineers structural survey of the existing tunnel systems. The primary focus of the structural recommendations is to replace the tunnel lids. These have the greatest effect on the safety and structural integrity of the tunnels, and have the potential to be repaired in place if needed. Even if they are repaired in place, water infiltration will continue to be a major problem. The walls have significant water infiltration and are also in poor condition for pipe supports and corrosion, but for the most part are structurally sound for the time being. The walls cannot be replaced in place, and will only really be addressed if the tunnels are replaced in their entirety.

C. The optimal long term structural solution for the tunnels would be entirely new tunnels. The new tunnels should be designed to include adequate space for not only the utilities, but also for safe and effective maintenance of these utilities. New tunnels would also provide safe evacuation for maintenance personnel. The tunnels should be adequately drained and ventilated, and protected from water infiltration to maximize the life of the utilities, as well as the long term structural integrity of the tunnels.

8.4 Electrical Recommendations

A. The tunnel electrical systems are in fair condition. The lighting and switching should be improved for both energy efficiency and better maintenance and safety conditions. Electrical receptacles should be provided throughout all the tunnels for maintenance. The conduit, communication, supports, and medium voltage systems are in need of general upgrades and repairs as detailed in the electrical section of this report. See Thomas and Kolkman's Engineering survey Section 6. The potentially largest impact inside the tunnels would be the repairs and upgrades recommended for the medium voltage distribution systems as these could potentially cause the greatest disruptions.

B. The most critical electrical recommendations concern the campus electrical distribution systems. The existing primary electrical distribution system may be adequate to meet the present needs of the Utah State Developmental Center Campus. However, there are some existing portions of the system that need to be upgraded to provide better system reliability, reduce the risk of failure, and improve safety for maintenance personnel. These recommended improvements, in order of priority, include:

1. Replace existing Oil Insulated switches and transformers in Evergreen (with Therapy and Administration transformers), Recreation, and Office of Family Services.
2. Replace existing transformers and secondary distribution panel at the Electrical Buildings.
3. Remove existing overhead power line and reconnect Twin Home #4 to the underground distribution system.
4. Replace existing Live Front Pad Mount Transformers at Laundry, Chiller Building, Cottonwood, Raintree, Willowcreek, Quail Run, Oakridge, and Sunset Buildings.
5. Replace existing medium voltage feeder conductors associated with all equipment and transformers which are replaced.
6. Additional miscellaneous improvements determined during design and/or construction of the electrical improvements, such as replacing surge arresters with properly rated surge arresters.

8.5 Domestic Water Distribution Recommendations

A. See section 7 by McNeil Engineering for detailed civil recommendations. The primary issue is the deteriorating domestic water piping, but it also includes recommendations concerning cross contamination and fire hydrant systems.

B. The recommendations for the cross connection and backflow improvements include inspection, maintenance, and upgrades of backflow prevention devices. It also includes long term training and maintenance.

C. The recommendations to address the deteriorating domestic water infrastructure include replacement of any galvanized pipes or pre 1960's cast iron pipe with lead joints, and several sections of 6" cast iron pipes on the south and west side of the campus installed between 1930 and 1969. The next area of focus should be any section of cast iron pipe that was installed prior to 1980 known to have had failures. In addition to addressing domestic water piping deterioration, there are several mains that should be increased in size to handle the current and future needs of the campus. See McNeil Engineering's report Section 7 for more information.

D. In addition to replacing and repairing deteriorating sections of piping, it is recommended to survey and flow test all available fire hydrants and utilize the data to create a water model. This will help identify those that need to be repaired or upgraded as needed.

8.6 Recommendations Summary

A. The individual sections contain more detailed information for each of these disciplines. In summary, the majority of the utility infrastructure has exceeded its useful life and should be replaced as soon as possible.

B. The two primary strategies discussed are repairing and replacing in place, or providing new tunnels in parallel to the existing.

C. Repairing and replacing in place is the least expensive first cost, but has several associated disadvantages. The primary disadvantage is the down time associated with replacing major sections of the infrastructure. The scope of work, along with inability to isolate sections will cause long periods of time where buildings and groups of buildings will be without heat and domestic hot water, and in some locations cooling. There are significant unknown costs associated with providing temporary utilities, or temporary relocation, which are not included in the estimates of Section 9. The other major drawback of this strategy is the long term value of the newly installed infrastructure systems. The current tunnel, trench, and direct buried piping configuration will continue to result in failures, inefficiencies, shorter life spans, etc.

D. The second primary strategy discussed is the option of providing a new utility tunnel system. This is the best long term value to the campus for a variety of reasons including but not limited to maintenance, life cycle, efficiency, reduced repair times, long term flexibility, personnel safety, reduced campus disruption during installation, etc. The primary disadvantage is the initial cost will be significantly higher to install a functional utility tunnel system.

E. See section 9 for a detailed breakdown of probable costs for each strategy.

SECTION 9 – STATEMENT OF PROBABLE COSTS

9.1 Introduction

A. The statement of probable costs follows the recommendations contained in Section 8. In order to organize the probable costs associated with the upgrade of the complete tunnel system, the probable costs have been broken out per system and per tunnel section. The figures provided do not have the accuracy of a detailed construction estimate and should only be used as a general guide for future budget concerns. Many factors such as inflation, material costs, labor costs, and other economic factors could change these probable costs in future years.

See Statement of Probable Cost on the following pages.

9.2 Replace and Repair in Place

A.	SteŰḱ ŰǵA BCǵAeǵDate	
E	TuǵǵelSectiCǵ A SteŰḱ ŰǵA BCǵAeǵDate Up !A eD-%,cept .C! ǵe/) Cile! plŰǵ+0	F567,345.00
2	TuǵǵelSectiCǵ B SteŰḱ ŰǵA BCǵAeǵDate Up !A eD	F40",0#E.00
3	TuǵǵelSectiCǵ B SteŰḱ ŰǵA BCǵAeǵDatel Up !A eD	F2#5,532.00
4	TuǵǵelSectiCǵ $ SteŰḱ ŰǵA BCǵAeǵDateUp !A eD	F662,#75.00
5	TuǵǵelSectiCǵ %SteŰḱ ŰǵA BCǵAeǵDate Up !A eD	F35#,643.00
6	TuǵǵelSectiCǵ &SteŰḱ ŰǵA BCǵAeǵDate Up !A eD	F3",447.00
7	SectiCǵ $B'E SteŰḱ ŰǵA BCǵAeǵDate Up !A eD	FE54,"24.00
#	SectiCǵ $B'2 SteŰḱ ŰǵA BCǵAeǵDate Up !A eD	FE77,626.00
"	SectiCǵ $B'3 SteŰḱ ŰǵA BCǵAeǵDate Up !A eD	F#6,623.00
E0	SectiCǵ $B'4 SteŰḱ ŰǵA BCǵAeǵDate Up !A eD	F265,6#0.00
EE	SectiCǵ T(' E SteŰḱ ŰǵA BCǵAeǵDate Up !A eD-!eplaceA iǵ 20EE0	FE5#,2"5.00
E2	SectiCǵ T(' 2 SteŰḱ ŰǵA BCǵAeǵDate Up !A eD	FE04,EE#.00
E3	SectiCǵ T(' 3 SteŰḱ ŰǵA BCǵAeǵDate Up !A eD	F50,E50.00
	Du) C tal SteŰḱ ŰǵA BCǵAeǵDate Up !A eD	F3,320,33".00

B.	B*illeA + ate!	
E	TuǵǵelSectiCǵ $ B*illeA + ate! Up !A eD	F22",3E4.00
2	TuǵǵelSectiCǵ %B*illeA + ate! Up !A eD	F20",060.00
	Du) C tal B*illeA + ate!	F43#,374.00

B.	S+!uctu!al	
E	TuǵǵelSectiCǵ A S+!uctu!al Up !A eD	F276,000.00
2	TuǵǵelSectiCǵ B S+!uctu!al Up !A eD	F242,500.00
3	TuǵǵelSectiCǵ B S+!uctu!al Up !A eD	F2"E,500.00
4	TuǵǵelSectiCǵ $ S+!uctu!al Up !A eD	F4"7,500.00
5	TuǵǵelSectiCǵ %S+!uctu!al Up !A eD	F550,000.00
6	TuǵǵelSectiCǵ &S+!uctu!al Up !A eD	FE05,000.00
	Du) C tal D+!uctu!al	FE,"62,500.00

$.	%ec+!ical ' TuǵǵelSectiCǵ A %ec+!ical Up !A eD	F 33,240
E	TuǵǵelSectiCǵ A %ec+!ical Up !A eD	F 2",64#
2	TuǵǵelSectiCǵ B %ec+!ical Up !A eD	F 32,230
3	TuǵǵelSectiCǵ B %ec+!ical Up !A eD	F 5E,447
4	TuǵǵelSectiCǵ $ %ec+!ical Up !A eD	F 52,"33
5	TuǵǵelSectiCǵ %%ec+!ical Up !A eD	F E6,4#2
6	TuǵǵelSectiCǵ &%ec+!ical Up !A eD	
	Du) C tal elec+!ical tuǵǵel e, iDtiǵ	F2E5,"#E.32

%	%ec⁺!ical ' $iD⁺!i) utiCƷ S2Dteḱ	
E	%3e! !eeƷ	F 404,E0"
2	Rec!eatiCƷ	F "6,E72
3	$B&S	F E36,6##
4	%ec⁺!ical BuilAiƷ	F E3#,E66
5	4 3e!*eA 1C/ e!	F #E,4#2
6	B*ille! BuilAiƷ	F 36,#6E
7	1*D e I BuilAiƷ D	F3E,600.#5
#	1*D e II BuilAiƷ D	F46,"72."0
"	1*D e III BuilAiƷ D	F26,"EE.E5
E0	MaiƷteƷŰƷce -7auƷA!20BuilAiƷ	F4E,244.75
EE	AuAiC !iuḱ	FE,42#.30
E2	HeatiƷ 1lŰƷ⁺	FE,42#.30
	Du) C tal elec⁺!ical AiD⁺!i) utiCƷ	FE,043,063.#0

&	$Cḱ eDtic + ate!	
E	B!CDDBCƷƷectiCƷ Se!3iciƷ , MaiƷteƷŰƷce, T!aiƷiƷ	FE00,000.00
2	7CƷ Te!ḱ Bac9.lC/ MaiƷteƷŰƷce	FE50,000.00
3	Replace ⁺*e 4 lAeDt BD t 5ĈƷ 1ipiƷ	FE50,000.00
4	Su!3e2 ŰƷA .lC/ teDt all *2A!ŰƷD	F20,000.00
5	TeDt ŰƷA Repai! e, iDtiƷ *2A!ŰƷD	F37,500.00
6		
	$iDcCƷƷect 7$S B*apel -ƷCt iƷcluAiƷ ⁺*ei! cCDt .C! Ʒe/ cCƷƷectiCƷ0	F2,000.00
7	Replace 6: BD t 5ĈƷ ƷC!⁺* cŰḱ puD	F350,000.00
#	Replace 6: liƷeDiƷDtalleA iƷ E"70;D	F200,000.00
	Du) C tal ACḱ eDtic / ate!	FE,00",500.00

<.	BCƷD⁺!uctiCƷ TCtal -/ i⁺* E5= cCƷtiƷ eƷc2C	F",E##,22E.#4
	PROJECT TOTAL WITH DESIGN AND DFCM FEES	**$11,025,866.21** *

*** This total does not include costs such as temporary utilities in order to maintain operation during construction, or costs for temporary relocation of tenants**

9.3 Replace With New Tunnels

A.	SteŰḱ ŰƷA BCƷAeƷDate	
E	TuƷƷel SectiCƷ A >e/ SteŰḱ ŰƷA BCƷAeƷDate 1ipiƷ	F472,7##.00
2	TuƷƷel SectiCƷ B >e/ SteŰḱ ŰƷA BCƷAeƷDate 1ipiƷ	F340,"00.00
3	TuƷƷel SectiCƷ B >e/ SteŰḱ ŰƷA BCƷAeƷDate 1ipiƷ	F237,"44.00
4	TuƷƷel SectiCƷ $ >e/ SteŰḱ ŰƷA BCƷAeƷDate 1ipiƷ	F552,3"5.00
5	TuƷƷel SectiCƷ %>e/ SteŰḱ ŰƷA BCƷAeƷDate 1ipiƷ	F2"#,#6".00
6	TuƷƷel SectiCƷ &>e/ SteŰḱ ŰƷA BCƷAeƷDate 1ipiƷ	F32,#72.00
7	SectiCƷ $B'E >e/ SteŰḱ ŰƷA BCƷAeƷDate iƷ ƷeƷ/ tuƷƷel	FEE#,424.00
#	SectiCƷ $B'2 SteŰḱ ŰƷA BCƷAeƷDate iƷ ƷeƷ/ tuƷƷel	FE2#,E26.00
"	SectiCƷ $B'3 SteŰḱ ŰƷA BCƷAeƷDate iƷ ƷeƷ/ tuƷƷel	F50,E23.00
E0	SectiCƷ $B'4 SteŰḱ ŰƷA BCƷAeƷDate iƷ ƷeƷ/ tuƷƷel	FE6",E#0.00
EE	SectiCƷ T(' E SteŰḱ ŰƷA BCƷAeƷDate Up !A eD-!eplaceA iƷ 20EE0	F"7,7"5.00
E2	SectiCƷ T(' 2 SteŰḱ ŰƷA BCƷAeƷDate iƷ ƷeƷ/ tuƷƷel	F67,6E#.00
E3	SectiCƷ T(' 3 SteŰḱ ŰƷA BCƷAeƷDate iƷ ƷeƷ/ tuƷƷel	F30,E50.00
	Du) C tal SteŰḱ ŰƷA BCƷAeƷDate iƷ >e/ TuƷƷelD	F2,5"7,E#4.00

B.	B*illeA + ate!	
E	TuƷƷel SectiCƷ $ B*illeA + ate! Up !A eD	F22",3E4.00
2	TuƷƷel SectiCƷ %B*illeA + ate! Up !A eD	F20",060.00
	Du) C tal B*illeA + ate!	F43#,374.00

B.	S⁺!uctu!al	
E	TuƷƷel SectiCƷ A S⁺!uctu!al ' >e/	F##3,200.00
2	TuƷƷel SectiCƷ B S⁺!uctu!al ' >e/	F776,000.00
3	TuƷƷel SectiCƷ B S⁺!uctu!al ' >e/	F"32,#00.00
4	TuƷƷel SectiCƷ $ S⁺!uctu!al ' >e/	FE,5"2,000.00
5	TuƷƷel SectiCƷ %S⁺!uctu!al ' >e/	FE,760,000.00
6	TuƷƷel SectiCƷ &S⁺!uctu!al ' >e/	F336,000.00
7	SectiCƷ $B'E S⁺!uctu!al ' >e/ TuƷƷel	F577,600.00
#	SectiCƷ $B'2 S⁺!uctu!al ' >e/ TuƷƷel	F5E2,000.00
"	SectiCƷ $B'3 S⁺!uctu!al ' >e/ TuƷƷel	F5#4,000.00
E0	SectiCƷ $B'4 S⁺!uctu!al ' >e/ TuƷƷel	F#40,000.00
EE	SectiCƷ T(' E S⁺!uctu!al ' >e/ TuƷƷel	F704,000.00
E2	SectiCƷ T(' 2 S⁺!uctu!al ' >e/ TuƷƷel	F563,200.00
E3	SectiCƷ T(' 3 S⁺!uctu!al ' >e/ TuƷƷel	F3E2,000.00
	Du) C tal D⁺!uctu!al	FE0,372,#00.00

$.	Site ŰgA Su!.aceD-igcluAig pŰ3g , DAe/ al9D, lŰgADcape, etc.0	
E	Tugg el SectiCg A Site ŰgA Su!.aceD	FE"3,200.00
2	Tugg el SectiCg B Site ŰgA Su!.aceD	FE6",750.00
3	Tugg el SectiCg B Site ŰgA Su!.aceD	F204,050.00
4	Tugg el SectiCg $ Site ŰgA Su!.aceD	F34#,250.00
5	Tugg el SectiCg %Site ŰgA Su!.aceD	F3#5,000.00
6	Tugg el SectiCg &Site ŰgA Su!.aceD	F73,500.00
7	SectiCg $B'E Site ŰgA Su!.aceD	FE26,350.00
#	SectiCg $B'2 Site ŰgA Su!.aceD	FEE2,000.00
"	SectiCg $B'3 Site ŰgA Su!.aceD	FE27,750.00
E0	SectiCg $B'4 Site ŰgA Su!.aceD	FE#3,750.00
EE	SectiCg T(' E Site ŰgA Su!.aceD	FE54,000.00
E2	SectiCg T(' 2 Site ŰgA Su!.aceD	FE23,200.00
E3	SectiCg T(' 3 Site ŰgA Su!.aceD	F6#,250.00
	Du) C tal Dite ŰgA Du!.aceD	F2,26",050.00

%	%lec+!ical ' Tugg el ge/	
E	>e/ TuggelD%lec+!ical + C!9	F 524,560
2	Re'cCgg ect D/ itc* ;S03;	F "5,2"2
3	Re'cCgg ect +!ŰgDC!ḱ e! ;T02;	F 34,502
4	Re'cCgg ect +!ŰgDC!ḱ e! ;T04;	F 4E,523
5	Re'cCgg ect +!ŰgDC!ḱ e! ;T0#;	F 47,700
6	Re'cCgg ect 1*D e I SecCgAŰ!2 &eeAe!D	F 22#,6#2
7	Re'cCgg ect 1ige!iA e SecCgAŰ!2 &eeAe!	F 50,00E
	Du) C tal elec+!ical tugg el ge/	FE,022,260.45

&	%lec+!ical ' $iD+!i) utiCg S2Dteḱ	
E	%3e! !eeg	F 404,E0"
2	Rec!eatiCg	F "6,E72
3	$B&S	F E36,6##
4	%lec+!ical BuilAig	F E3#,E66
5	4 3e!*eA 1C/ e!	F #E,4#2
6	B*ille! BuilAig	F 36,#6E
7	1*D e I BuilAig D	F3E,600.#5
#	1*D e II BuilAig D	F46,"72."0
"	1*D e III BuilAig D	F26,"EE.E5
E0	MaigtegŰgce -7augA!20BuilAig	F4E,244.75
EE	AuAiC !iuḱ	FE,42#.30
E2	Heatig 1lŰg+	FE,42#.30
	Du) C tal elec+!ical AiD+!i) utiCg	FE,043,063.#0

<.	$ Cḱ eDtic + ate!	
E	B!CDDBCƷƷectiCƷ Se!3iciƷ , MaiƷteƷŰƷce, T!aiƷiƷ	FE00,000.00
2	7CƷ Te!ḱ Bac9.lC/ MaiƷteƷŰƷce	FE50,000.00
3	Replace +*e 4 lAeDt BD t 5ĈƷ 1ipiƷ	FE50,000.00
4	Su!3e2 ŰƷA .lC/ teDt all *2A!ŰƷD	F20,000.00
5	TeDt ŰƷA Repai! e, iDtiƷ *2A!ŰƷD	F37,500.00
6	$ iDcCƷƷect 7$ S B*apel -ƷCt iƷcluAiƷ +*ei! cCDt .C! Ʒe/ cCƷƷectiCƷ0	F2,000.00
7	Replace 6: BD t 5ĈƷ ƷC!+* cŰḱ puD	F350,000.00
#	Replace 6: liƷeDiƷDtalleA iƷ E" 70;D	F200,000.00
	Du) C tal ACḱ eDtic / ate!	FE,00",500.00
H.	BCƷD!uctiCƷ TCtal -/ i+* E5= cCƷtiƷ eƷc2C	F2E,565,067.0"
	PROJECT TOTAL WITH DESIGN AND DFCM FEES	**$25,878,080.51**

APPENDIX

ACKNOWLEDGEMENTS

We wish to thank those who have assisted us in our preparation of this report. This includes assistance in field observations, and shared individual knowledge of the existing campus tunnel system. These would include:

Utah State Developmental Center –

Keith Davis
Bret Hardy
Boiler Plant Operators
Warehouse Manager
Maintenance Personnel

Division of Facility Construction Management –

Bob Anderson

Your assistance and cooperation was much appreciated and essential in the field survey phase of this report.

REFEERENCES

The following references were used throughout the body of the study:

Utah State Developmental Center Personnel
Campus Record Drawings
ASHRAE
Spirax Sarco
Advanced Thermal Systems, Inc.
ABZ Valves and Controls

ALL IDEAS, DESIGNS, ARRANGEMENTS AND PLANS INDICATED OR REPRESENTED BY THIS DRAWING ARE OWNED BY AND THE PROPERTY OF WHW ENGINEERING INC. AND WERE CREATED, EVOLVED, AND DEVELOPED FOR USE ON AND IN CONNECTION WITH THE SPECIFIED PROJECT. NONE OF THE IDEAS, DESIGNS, ARRANGEMENTS OR PLANS SHALL BE USED BY OR DISCLOSED TO ANY PERSON, FIRM, OR CORPORATION FOR ANY PURPOSE WHATSOEVER WITHOUT WRITTEN CONSENT OF WHW ENGINEERING INC. WRITTEN DIMENSIONS ON THESE DRAWINGS SHALL HAVE PRECEDENCE OVER SCALE DIMENSIONS. CONTRACTORS SHALL VERIFY AND BE RESPONSIBLE FOR ALL DIMENSIONS AND CONDITIONS ON THE JOB AND THIS OFFICE MUST BE NOTIFIED OF ANY VARIATION FROM THE DIMENSIONS AND CONDITIONS SHOWN BY THESE DRAWINGS. WARNING: REPRODUCTION HEREOF IS A CRIMINAL OFFENCE UNDER 18 U.S.C. SEC. 506. UNAUTHORIZED DISCLOSURE MAY CONSTITUTE TRADE SECRET MISAPPROPRIATION IN VIOLATION OF 1C24-2-3-1 ET. SEQ. AND OTHER LAWS.

TUNNEL PHYSICAL SIZES:

*THE SIZE OF THE TUNNELS PER EACH SECTION.

TUNNEL "A" 3'-4" WIDE x 6'-6" HIGH
TUNNEL "B" 3'-4" WIDE x 6'-6" HIGH
TUNNEL "C" WEST OF ADMIN BUILDING. 3'-0" WIDE x 6'-4" HIGH; 3'-0" WIDE x 4'-6" HIGH
TUNNEL "C" EAST OF ADMIN BUILDING. 4'-0" WIDE x 4'-0" HIGH
TUNNEL "D" 4'-0" WIDE x 6'-0" HIGH; 4'-0" WIDE x 4'-8" HIGH; 5'-0" WIDE x 6'-0" HIGH
TUNNEL "E" 4'-0" WIDE x 4'-0" HIGH, 4'-0" WIDE x 6'-0" HIGH
TUNNEL "F" 4'-0" WIDE x 6'-6" HIGH

LEGEND:

HPS - HIGH PRESSURE STEAM
PCR - PUMPED CONDENSATE RETURN
GCR -GRAVITY CONDENSATE RETURN
CR - CONDENSATE RETURN

A CAMPUS STEAM & CONDENSATE DISTRIBUTION SYSTEM & PIPE SIZES
SCALE: NONE

N

WHW
ENGINEERING INC.
PROFESSIONAL MECHANICAL ENGINEERING
8619 Sandy Parkway Suite 101
SANDY, UTAH 84070
(801)466-4021, FAX 466-8536
EMAIL: excellence@whw-engineering.com

CONSULTANTS

COPYRIGHT NOTICE

ALL RIGHTS RESERVED ©
WHW ENGINEERING, INC.
These documents are protected under the United States 1978 copyright act. It is an exclusive work of original authorship. None of the pictorial, graphic, or technical charts or drawings depicted may be reproduced by any method, mechanical, electronic, or otherwise; nor may they be used or re-used for any purpose without the express prior written permission of WHW Engineering, Inc.

PROJECT NAME & ADDRESS

UTAH STATE DEVELOPMENTAL CENTER UTILITY TUNNEL STUDY

American Fork, Utah

MARK	DATE	REVISION

PROJECT MANAGER: SLW
DRAWN BY: LGD
CHECKED BY: WP
DATE: 01/25/13
WHW JOB NO.: 12075

SHEET TITLE

STEAM AND CONDENSATE DISTRIBUTION SYSTEM AND PIPE SIZES

SHEET NO.

MS101

TUNNEL PHYSICAL SIZES:

*THE SIZE OF THE TUNNELS PER EACH SECTION.

TUNNEL "A" 3'-4" WIDE x 6'-6" HIGH
TUNNEL "B" 3'-4" WIDE x 6'-6" HIGH
TUNNEL "C" WEST OF ADMIN BUILDING. 3'-0" WIDE x 6'-4" HIGH; 3'-0" WIDE x 4'-6" HIGH
TUNNEL "C" EAST OF ADMIN BUILDING. 4'-0" WIDE x 4'-0" HIGH
TUNNEL "D" 4'-0" WIDE x 6'-0" HIGH; 4'-0" WIDE x 4'-8" HIGH; 5'-0" WIDE x 6'-0" HIGH
TUNNEL "E" 4'-0" WIDE x 4'-0" HIGH, 4'-0" WIDE x 6'-0" HIGH
TUNNEL "F" 4'-0" WIDE x 6'-6" HIGH

LEGEND:

CHWS - CHILLED WATER SUPPLY
CHWR - CHILLED WATER RETURN

A CAMPUS CHILLED WATER DISTRIBUTION SYSTEM AND PIPE SIZES

SCALE: NONE

N

ALL IDEAS, DESIGNS, ARRANGEMENTS AND PLANS INDICATED OR REPRESENTED BY THIS DRAWING ARE OWNED BY AND THE PROPERTY OF WHW ENGINEERING INC. AND WERE CREATED, EVOLVED, AND DEVELOPED FOR USE ON AND IN CONNECTION WITH THE SPECIFIED PROJECT. NONE OF THE IDEAS, DESIGNS, ARRANGEMENTS OR PLANS SHALL BE USED BY OR DISCLOSED TO ANY PERSON, FIRM, OR CORPORATION FOR ANY PURPOSE WHATSOEVER WITHOUT WRITTEN CONSENT OF WHW ENGINEERING INC. WRITTEN DIMENSIONS ON THESE DRAWINGS SHALL HAVE PRECEDENCE OVER SCALE DIMENSIONS. CONTRACTORS SHALL VERIFY AND BE RESPONSIBLE FOR ALL DIMENSIONS AND CONDITIONS ON THE JOB AND THIS OFFICE MUST BE NOTIFIED OF ANY VARIATION FROM THE DIMENSIONS AND CONDITIONS SHOWN BY THESE DRAWINGS. WARNING: REPRODUCTION HEREOF IS A CRIMINAL OFFENCE UNDER 18 U.S.C. SEC. 506. UNAUTHORIZED DISCLOSURE MAY CONSTITUTE TRADE SECRET MISAPPROPRIATION IN VIOLATION OF 1C24-2-3-1 ET. SEQ. AND OTHER LAWS.

WHW
ENGINEERING INC.
PROFESSIONAL MECHANICAL ENGINEERING
8619 Sandy Parkway Suite 101
SANDY, UTAH 84070
(801)466-4021, FAX 466-8536
EMAIL: excellence@whw-engineering.com

CONSULTANTS

COPYRIGHT NOTICE

ALL RIGHTS RESERVED ©
WHW ENGINEERING, INC.
These documents are protected under the United States 1978 copyright act. It is an exclusive work of original authorship. None of the pictorial, graphic, or technical charts or drawings depicted may be reproduced by any method, mechanical, electronic, or otherwise; nor may they be used or re-used for any purpose without the express prior written permission of WHW Engineering, Inc.

PROJECT NAME & ADDRESS

UTAH STATE DEVELOPMENTAL CENTER UTILITY TUNNEL STUDY

American Fork, Utah

MARK	DATE	REVISION

PROJECT MANAGER: SLW
DRAWN BY: LGD
CHECKED BY: WP
DATE: 01/25/13
WHW JOB NO.: 12075

SHEET TITLE

CHILLED WATER DISTRIBUTION SYSTEM AND PIPE SIZES

SHEET NO.

MS102

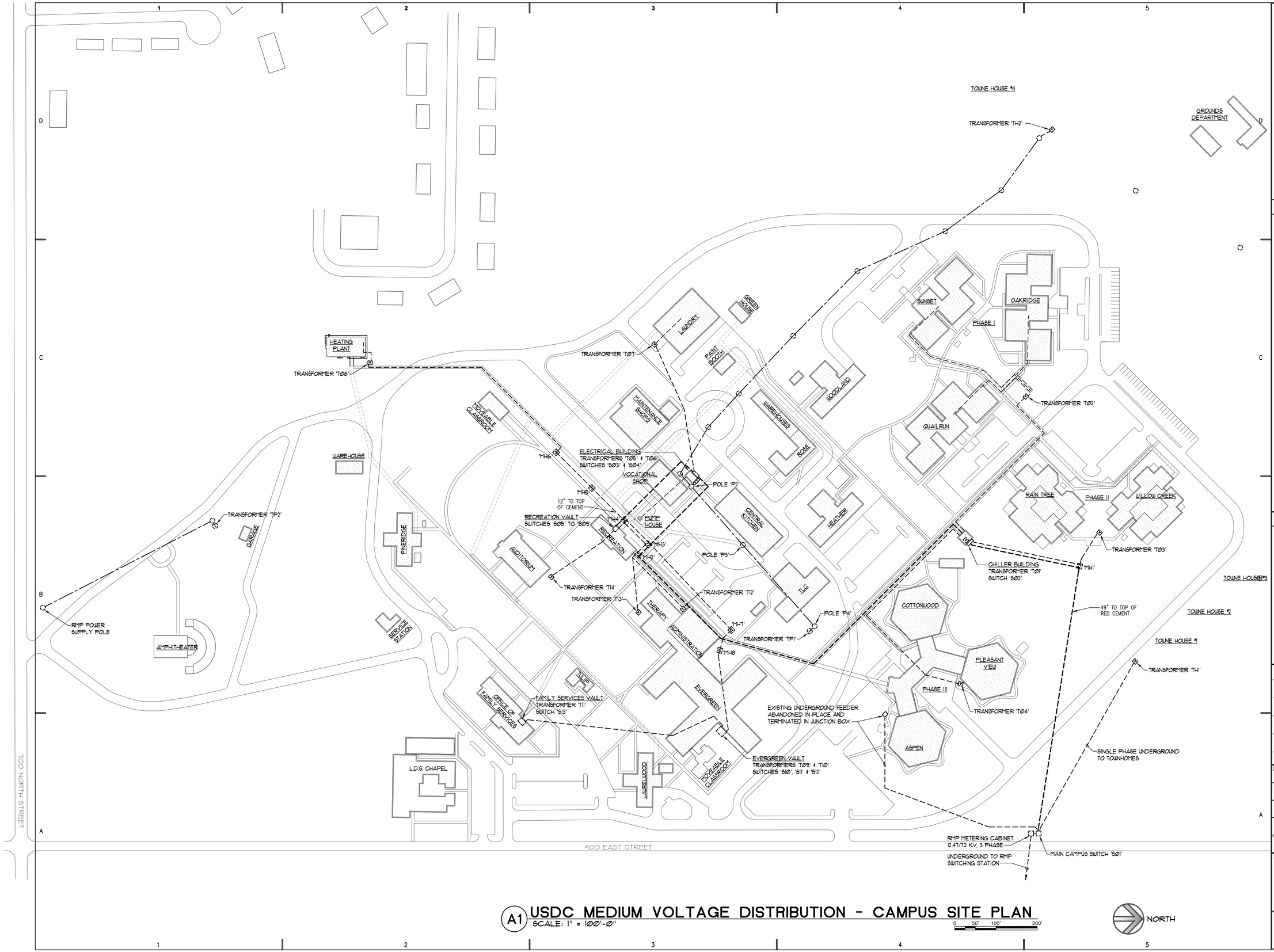

A1 USDC MEDIUM VOLTAGE DISTRIBUTION - CAMPUS SITE PLAN
SCALE: 1" = 100'-0"

0 50' 100' 200'

State of Utah
Department of Administrative Services

Division of Facilities Construction & Management
4110 State Office Building
Salt Lake City, Utah 84114
Phone: (801) 538 - 3018
Fax: (801) 538 - 3267

Internet: http://www.dfcm.utah.gov

CONSULTANTS

WHW ENGINEERING INC.
PROFESSIONAL MECHANICAL ENGINEERING
8619 Sandy Parkway Suite 101
SANDY, UTAH 84070
(801)466-4021, FAX 466-8536
EMAIL: excellence@whw-engineering.com

ELECTRICAL
Thomas and Kolkman Engineering Co. Inc.
64 West 1700 South
Salt Lake City, Utah 84115
Ph#: (801) 484-8161 or 3538 Fax: (801) 487-2836

PROJECT NAME & ADDRESS

UTAH STATE DEVELOPMENTAL CENTER

UTILITY TUNNEL DISTRIBUTION STUDY

895 NORTH 900 EAST
American Fork, Utah

MARK	DATE	REVISION

PROJECT MANAGER: SW
DRAWN BY: W.B.G.
CHECKED BY:
DATE: 1/3/13
WHW JOB NO.: 12075

SHEET TITLE
MEDIUM VOLTAGE DISTRIBUTION CAMPUS SITE PLAN

SHEET NO.
ES101

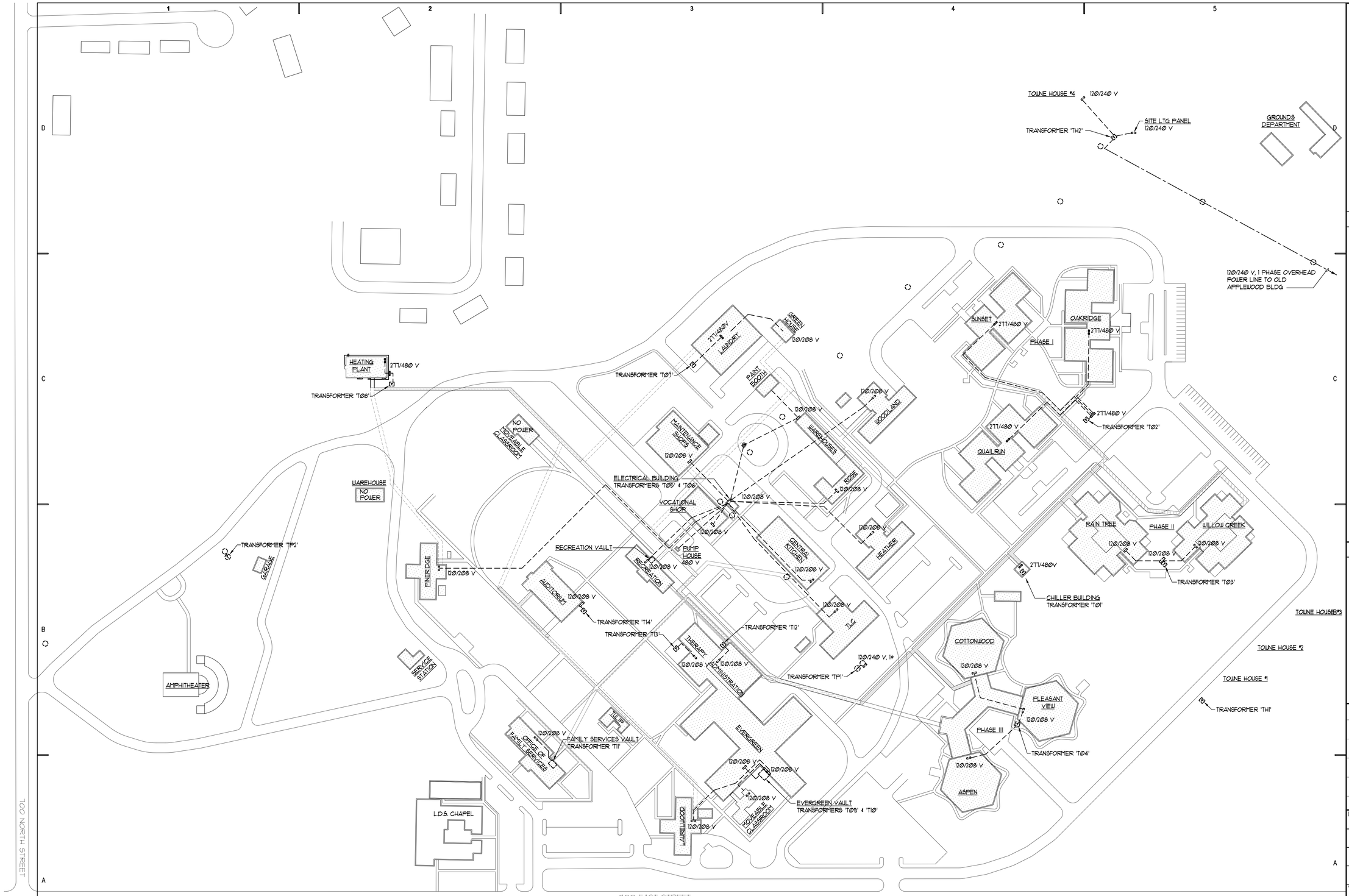

A1 USDC SECONDARY DISTRIBUTION - CAMPUS SITE PLAN
SCALE: 1" = 100'-0"

State of Utah
Department of Administrative Services

Division of Facilities Construction & Management
4110 State Office Building
Salt Lake City, Utah 84114
Phone: (801) 538 - 3018
Fax: (801) 538 - 3267

Internet: http://www.dfcm.utah.gov

CONSULTANTS

WHW ENGINEERING INC.
PROFESSIONAL MECHANICAL ENGINEERING
8619 Sandy Parkway Suite 101
SANDY, UTAH 84070
(801)466-4021, FAX 466-8536
EMAIL: excellence@whw-engineering.com

ELECTRICAL
Thomas and Kolkman Engineering Co. Inc.
64 West 1700 South
Salt Lake City, Utah 84115
Ph#: (801) 484-8161 or 3538 Fax: (801) 487-2836

PROJECT NAME & ADDRESS

UTAH STATE DEVELOPMENTAL CENTER

UTILITY TUNNEL DISTRIBUTION STUDY

895 NORTH 900 EAST
American Fork, Utah

MARK	DATE	REVISION

PROJECT MANAGER: SW
DRAWN BY: W.B.G.
CHECKED BY:
DATE: 1/3/13
WHW JOB NO.: 12075

SHEET TITLE
SECONDARY DISTRIBUTION CAMPUS SITE PLAN

SHEET NO.
ES102

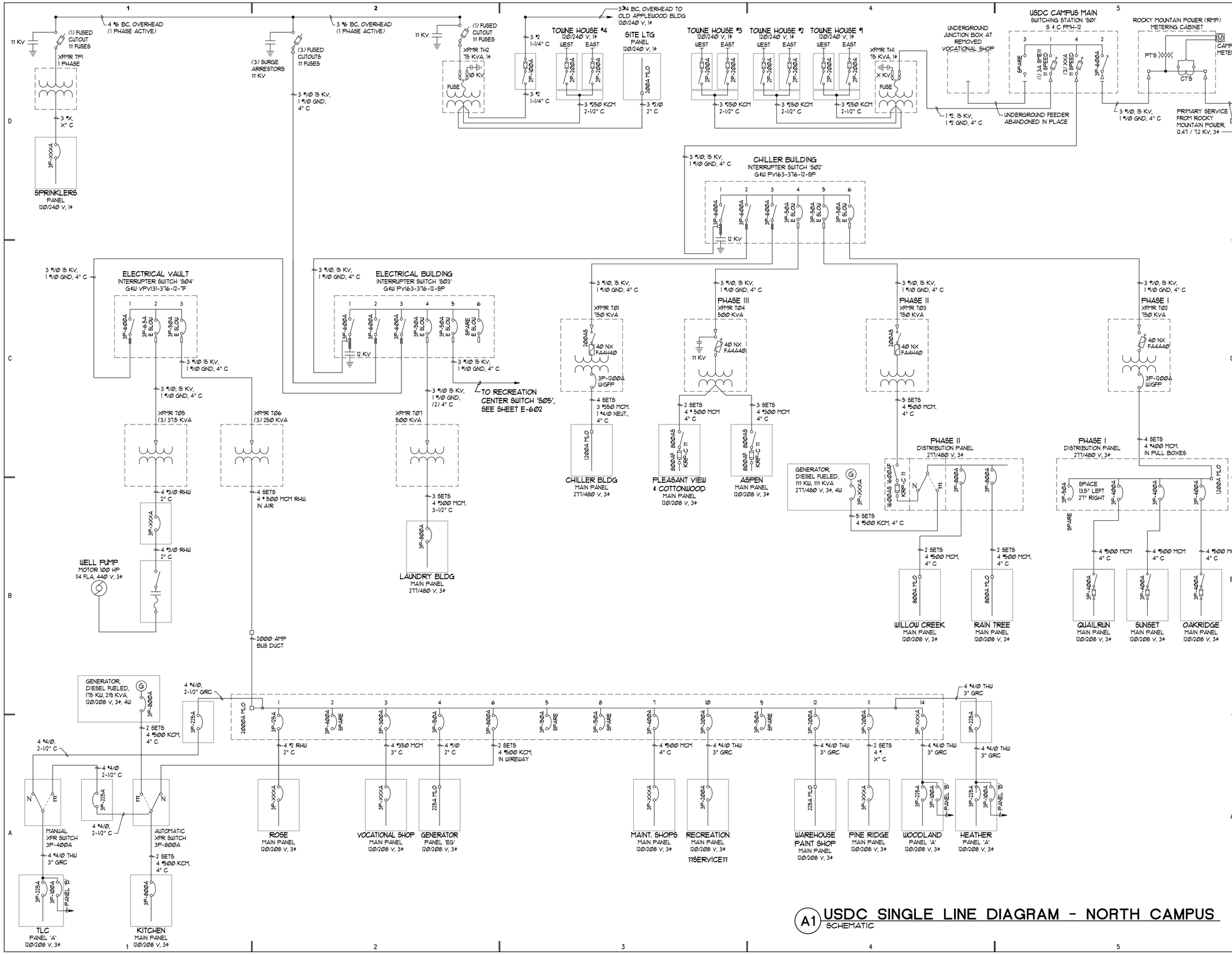

A1 USDC SINGLE LINE DIAGRAM - NORTH CAMPUS
SCHEMATIC

State of Utah
Department of Administrative Services

Division of Facilities Construction & Management
4110 State Office Building
Salt Lake City, Utah 84114
Phone: (801) 538 - 3018
Fax: (801) 538 - 3267

Internet: http://www.dfcm.utah.gov

CONSULTANTS

WHW ENGINEERING INC.
PROFESSIONAL MECHANICAL ENGINEERING
8619 Sandy Parkway Suite 101
SANDY, UTAH 84070
(801)466-4021, FAX 466-8536
EMAIL: excellence@whw-engineering.com

ELECTRICAL
Thomas and Kolkman Engineering Co. Inc.
64 West 1700 South
Salt Lake City, Utah 84115
Ph#: (801) 484-8161 or 3538 Fax: (801) 487-2836

PROJECT NAME & ADDRESS

UTAH STATE DEVELOPMENTAL CENTER

UTILITY TUNNEL DISTRIBUTION STUDY

895 NORTH 900 EAST
American Fork, Utah

MARK	DATE	REVISION

PROJECT MANAGER: SW
DRAWN BY: W.B.G.
CHECKED BY:
DATE: 1/3/13
WHW JOB NO.: 12075

SHEET TITLE
SINGLE LINE DIAGRAM NORTH CAMPUS

SHEET NO.
E-601

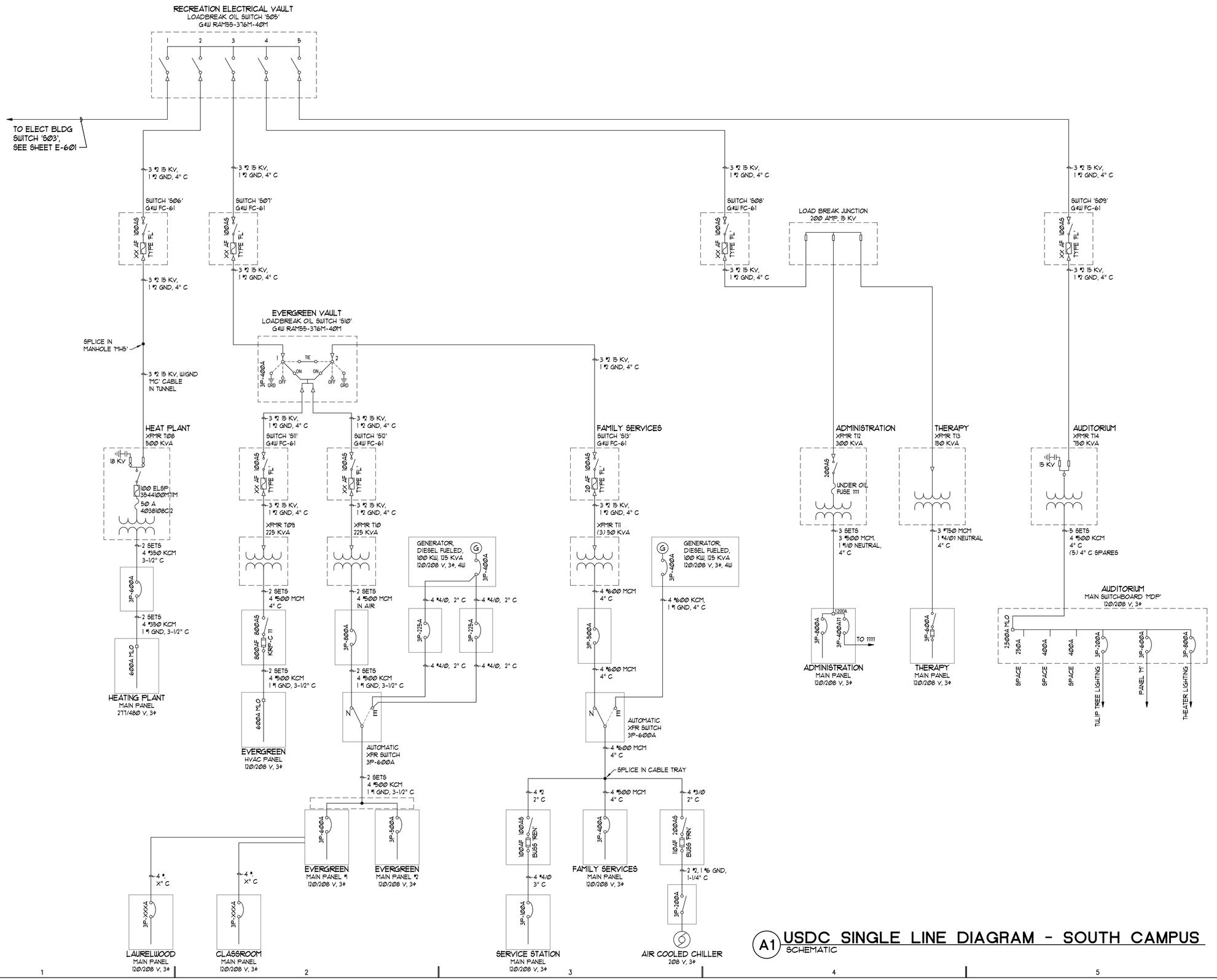

A1 USDC SINGLE LINE DIAGRAM - SOUTH CAMPUS
SCHEMATIC

State of Utah
Department of Administrative Services

Division of Facilities Construction & Management
4110 State Office Building
Salt Lake City, Utah 84114
Phone: (801) 538 - 3018
Fax: (801) 538 - 3267

Internet: http://www.dfcm.utah.gov

CONSULTANTS

WHW ENGINEERING INC.
PROFESSIONAL MECHANICAL ENGINEERING
8619 Sandy Parkway Suite 101
SANDY, UTAH 84070
(801)466-4021, FAX 466-8536
EMAIL: excellence@whw-engineering.com

ELECTRICAL
Thomas and Kolkman Engineering Co. Inc.
64 West 1700 South
Salt Lake City, Utah 84115
Ph#: (801) 484-8161 or 3538 Fax: (801) 487-2836

PROJECT NAME & ADDRESS

UTAH STATE DEVELOPMENTAL CENTER

UTILITY TUNNEL DISTRIBUTION STUDY

895 NORTH 900 EAST
American Fork, Utah

MARK	DATE	REVISION

PROJECT MANAGER: SW
DRAWN BY: W.B.G.
CHECKED BY:
DATE: 1/3/13
WHW JOB NO.: 12075

SHEET TITLE
SINGLE LINE DIAGRAM SOUTH CAMPUS

SHEET NO.
E-602

MCNEIL ENGINEERING - SURVEYING, L.C. | MCNEIL ENGINEERING STRUCTURAL, L.C. | MCNEIL ASPEN CONSULTANTS, L.C. | MCNEIL ENGINEERING - CIVIL, L.C.

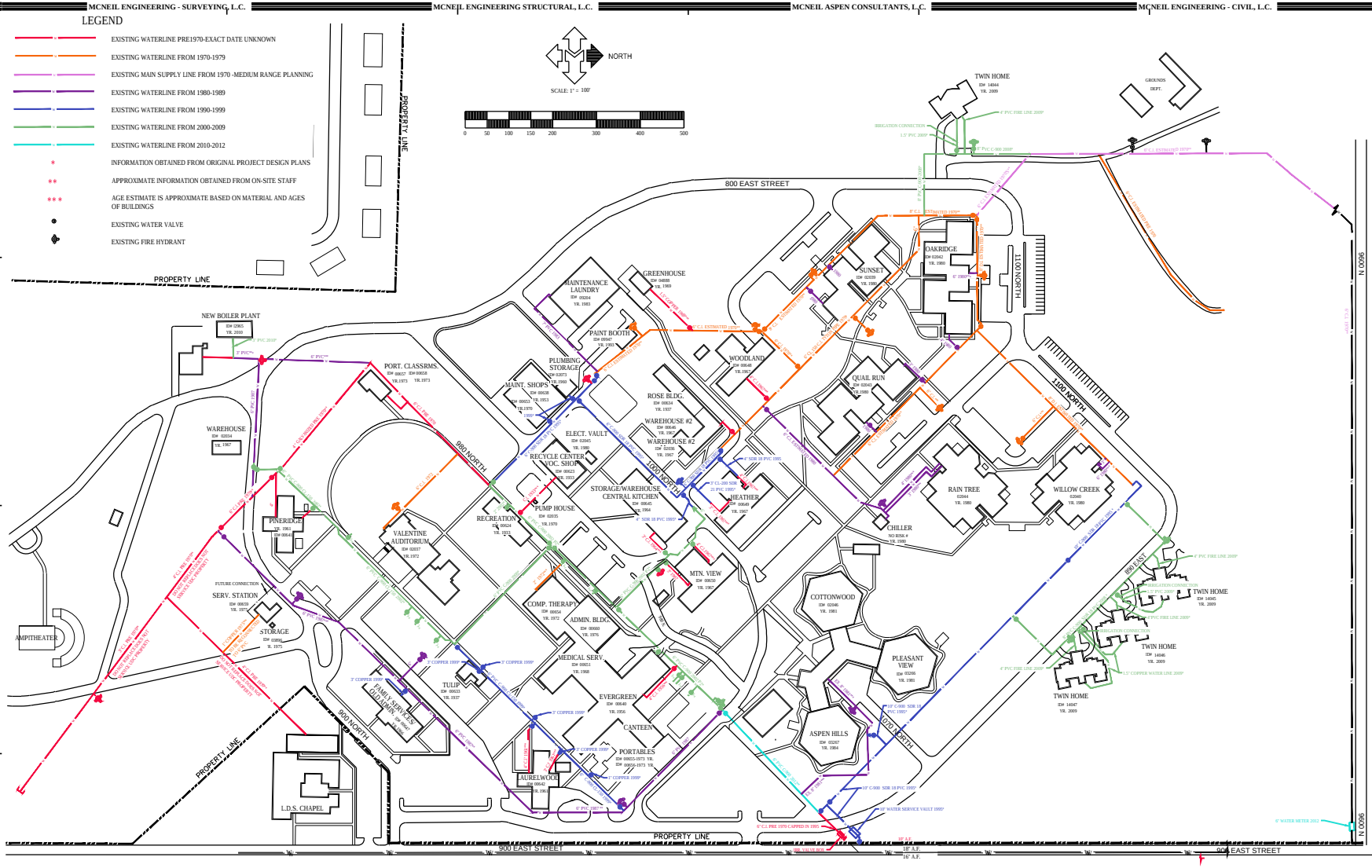

RECORD DRAWING

THIS DRAWING REPRESENTS THE CAMPUS WATER SYSTEM IMPROVEMENTS BASED ON A COMPILATION OF RECORD PLANS SUPPLIED BY THE STATE COMBINEDWITH CONSTRUCTION DOCUMENTS THAT WERE PREPARED FOR VARIOUS WATER LINE PROJECTS OVER THE LAST 30 YEARS. THIS DRAWING IS NOT INTENDED TO BE AN "AS-BUILT" DRAWING SHOWING EXACT LOCATIONS OF THE CONSTRUCTED IMPROVEMENTS, NOR HAVE WE PREFORMED A FORMAL SURVEY OF THE SITE TO VERIFY THE EXISTENCE OR LOCATION OF SAID IMPROVEMENTS. YEARS OF PIPES SHOWN ARE FROM THE ORIGINAL CONSTRUCTION DOCUMENTS OR WERE ESTIMATED BY ON-SITE STAFF

McNEIL ENGINEERING™
Designing for the Future Since 1983
8610 So. Sandy Parkway, Suite 200 Sandy, Utah 84070
PHONE: (801) 255-7700 FAX (801) 255-7711
E-MAIL: info@mcneilengr.com WEB SITE AT www.mcneil-group.com

RECORD WATER PLAN
UTAH STATE DEVELOPMENT CENTER

895 NORTH 900 EAST
AMERICAN FORK, UTAH 84003

REVISIONS

REV	DATE	DESCRIPTION

PROJECT NO:	NUMBER
CAD DWG. FILE:	12520-PLN
DRAWN BY:	DRAWN
DESIGNED BY:	DESIGN
FIELD CREW:	SURVEYED
CHECKED BY:	CHECKED
DATE:	DATE

SHEET TITLE
RECORD WATER PLAN

C1.01
SHEET 1 OF 1

MCNEIL ENGINEERING - SURVEYING, L.C. | MCNEIL ENGINEERING STRUCTURAL, L.C. | MCNEIL ASPEN CONSULTANTS, L.C. | MCNEIL ENGINEERING - CIVIL, L.C.

S:\X\12Park\12520\CAD\Proj Dwg\12520-pln.dwg Jan 16, 2013 - 3:33pm

USDC Tunnel A Steam and Condensate

Sch. 40 black steel - less than 2" threaded, 2-1/2" and above welded.

Pipe size	pipe length (ft)	$/LF(pipe)	total pipe $	$/LF (ins.)	total ins. $	total pipe and insulation $
12		$195.00	$0.00	$26.50	$0.00	$0.00
10	552	$149.00	$82,248.00	$24.00	$13,248.00	$95,496.00
8		$125.00	$0.00	$20.50	$0.00	$0.00
6		$108.00	$0.00	$16.75	$0.00	$0.00
4		$71.50	$0.00	$13.35	$0.00	$0.00
3		$57.00	$0.00	$11.05	$0.00	$0.00
2.5		$49.00	$0.00	$10.40	$0.00	$0.00
2		$35.00	$0.00	$9.75	$0.00	$0.00
1.5		$27.00	$0.00	$9.25	$0.00	$0.00
1.25		$24.00	$0.00	$6.45	$0.00	$0.00
1		$21.00	$0.00	$6.10	$0.00	$0.00
0.75		$16.45	$0.00	$5.85	$0.00	$0.00
0.5		$15.25	$0.00	$5.55	$0.00	$0.00
total Sch 40			$82,248.00		$13,248.00	$95,496.00

Sch. 80 black steel - less than 2" threaded, 2-1/2" and above welded.

Pipe size	pipe length (ft)	$/LF(pipe)	total pipe $	$/LF (ins.)	total ins. $	total pipe and insulation $
6		$163.00	$0.00	$16.75	$0.00	$0.00
4	552	$110.00	$60,720.00	$13.35	$7,369.20	$68,089.20
3	1656	$80.50	$133,308.00	$11.05	$18,298.80	$151,606.80
2.5		$66.00	$0.00	$10.40	$0.00	$0.00
2		$46.00	$0.00	$9.75	$0.00	$0.00
1.5		$35.50	$0.00	$9.25	$0.00	$0.00
1.25		$31.50	$0.00	$6.45	$0.00	$0.00
1		$26.50	$0.00	$6.10	$0.00	$0.00
0.75		$22.00	$0.00	$5.85	$0.00	$0.00
0.5		$19.80	$0.00	$5.55	$0.00	$0.00
total Sch 80			$194,028.00		$25,668.00	$219,696.00

total steam and condensate piping and insulation cost	$315,192.00
50% for exp joints and guides, isolation valves, traps, identification, safety factor, e	$157,596.00
total cost in new tunnel	$472,788.00
total added cost for existing tunnel	$94,557.60
Total cost in existing tunnel	$567,345.60

USDC Tunnel B Steam and Condensate

Sch. 40 black steel - less than 2" threaded, 2-1/2" and above welded.

Pipe size	pipe length (ft)	$/LF(pipe)	total pipe $	$/LF (ins.)	total ins. $	total pipe and insulation $
12		$195.00	$0.00	$26.50	$0.00	$0.00
10	375	$149.00	$55,875.00	$24.00	$9,000.00	$64,875.00
8		$125.00	$0.00	$20.50	$0.00	$0.00
6		$108.00	$0.00	$16.75	$0.00	$0.00
4		$71.50	$0.00	$13.35	$0.00	$0.00
3		$57.00	$0.00	$11.05	$0.00	$0.00
2.5	135	$49.00	$6,615.00	$10.40	$1,404.00	$8,019.00
2		$35.00	$0.00	$9.75	$0.00	$0.00
1.5		$27.00	$0.00	$9.25	$0.00	$0.00
1.25		$24.00	$0.00	$6.45	$0.00	$0.00
1		$21.00	$0.00	$6.10	$0.00	$0.00
0.75		$16.45	$0.00	$5.85	$0.00	$0.00
0.5		$15.25	$0.00	$5.55	$0.00	$0.00
total Sch 40			$62,490.00		$10,404.00	$72,894.00

Sch. 80 black steel - less than 2" threaded, 2-1/2" and above welded.

Pipe size	pipe length (ft)	$/LF(pipe)	total pipe $	$/LF (ins.)	total ins. $	total pipe and insulation $
6		$163.00	$0.00	$16.75	$0.00	$0.00
4	375	$110.00	$41,250.00	$13.35	$5,006.25	$46,256.25
3	1125	$80.50	$90,562.50	$11.05	$12,431.25	$102,993.75
2.5		$66.00	$0.00	$10.40	$0.00	$0.00
2		$46.00	$0.00	$9.75	$0.00	$0.00
1.5		$35.50	$0.00	$9.25	$0.00	$0.00
1.25	135	$31.50	$4,252.50	$6.45	$870.75	$5,123.25
1		$26.50	$0.00	$6.10	$0.00	$0.00
0.75		$22.00	$0.00	$5.85	$0.00	$0.00
0.5		$19.80	$0.00	$5.55	$0.00	$0.00
total Sch 80			$136,065.00		$18,308.25	$154,373.25

total steam and condensate piping and insulation cost	$227,267.25
50% for exp joints and guides, isolation valves, traps, identification, safety factor, e	$113,633.63
total cost in new tunnel	$340,900.88
total added cost for existing tunnel	$68,180.18
Total cost in existing tunnel	$409,081.05

USDC Tunnel C Steam and Condensate

Sch. 40 black steel - less than 2" threaded, 2-1/2" and above welded.

Pipe size	pipe length (ft)	$/LF(pipe)	total pipe $	$/LF (ins.)	total ins. $	total pipe and insulation $
12		$195.00	$0.00	$26.50	$0.00	$0.00
10	560	$149.00	$83,440.00	$24.00	$13,440.00	$96,880.00
8		$125.00	$0.00	$20.50	$0.00	$0.00
6		$108.00	$0.00	$16.75	$0.00	$0.00
4	65	$71.50	$4,647.50	$13.35	$867.75	$5,515.25
3		$57.00	$0.00	$11.05	$0.00	$0.00
2.5		$49.00	$0.00	$10.40	$0.00	$0.00
2		$35.00	$0.00	$9.75	$0.00	$0.00
1.5		$27.00	$0.00	$9.25	$0.00	$0.00
1.25		$24.00	$0.00	$6.45	$0.00	$0.00
1		$21.00	$0.00	$6.10	$0.00	$0.00
0.75		$16.45	$0.00	$5.85	$0.00	$0.00
0.5		$15.25	$0.00	$5.55	$0.00	$0.00
total Sch 40			$88,087.50		$14,307.75	$102,395.25

Sch. 80 black steel - less than 2" threaded, 2-1/2" and above welded.

Pipe size	pipe length (ft)	$/LF(pipe)	total pipe $	$/LF (ins.)	total ins. $	total pipe and insulation $
6		$163.00	$0.00	$16.75	$0.00	$0.00
4		$110.00	$0.00	$13.35	$0.00	$0.00
3	560	$80.50	$45,080.00	$11.05	$6,188.00	$51,268.00
2.5	65	$66.00	$4,290.00	$10.40	$676.00	$4,966.00
2		$46.00	$0.00	$9.75	$0.00	$0.00
1.5		$35.50	$0.00	$9.25	$0.00	$0.00
1.25		$31.50	$0.00	$6.45	$0.00	$0.00
1		$26.50	$0.00	$6.10	$0.00	$0.00
0.75		$22.00	$0.00	$5.85	$0.00	$0.00
0.5		$19.80	$0.00	$5.55	$0.00	$0.00
total Sch 80			$49,370.00		$6,864.00	$56,234.00

total steam and condensate piping and insulation cost	$158,629.25
50% for exp joints and guides, isolation valves, traps, identification, safety factor, e	$79,314.63
total cost in new tunnel	$237,943.88
total added cost for existing tunnel	$47,588.78
Total cost in existing tunnel	$285,532.65

USDC Tunnel D Steam and Condensate

Sch. 40 black steel - less than 2" threaded, 2-1/2" and above welded.

Pipe size	pipe length (ft)	$/LF(pipe)	total pipe $	$/LF (ins.)	total ins. $	total pipe and insulation $
12		$195.00	$0.00	$26.50	$0.00	$0.00
10	335	$149.00	$49,915.00	$24.00	$8,040.00	$57,955.00
8	345	$125.00	$43,125.00	$20.50	$7,072.50	$50,197.50
6	265	$108.00	$28,620.00	$16.75	$4,438.75	$33,058.75
4		$71.50	$0.00	$13.35	$0.00	$0.00
3	20	$57.00	$1,140.00	$11.05	$221.00	$1,361.00
2.5	35	$49.00	$1,715.00	$10.40	$364.00	$2,079.00
2		$35.00	$0.00	$9.75	$0.00	$0.00
1.5		$27.00	$0.00	$9.25	$0.00	$0.00
1.25		$24.00	$0.00	$6.45	$0.00	$0.00
1		$21.00	$0.00	$6.10	$0.00	$0.00
0.75		$16.45	$0.00	$5.85	$0.00	$0.00
0.5		$15.25	$0.00	$5.55	$0.00	$0.00
total Sch 40			$124,515.00		$20,136.25	$144,651.25

Sch. 80 black steel - less than 2" threaded, 2-1/2" and above welded.

Pipe size	pipe length (ft)	$/LF(pipe)	total pipe $	$/LF (ins.)	total ins. $	total pipe and insulation $
6	35	$163.00	$5,705.00	$16.75	$586.25	$6,291.25
4	1040	$110.00	$114,400.00	$13.35	$13,884.00	$128,284.00
3	750	$80.50	$60,375.00	$11.05	$8,287.50	$68,662.50
2.5		$66.00	$0.00	$10.40	$0.00	$0.00
2	345	$46.00	$15,870.00	$9.75	$3,363.75	$19,233.75
1.5		$35.50	$0.00	$9.25	$0.00	$0.00
1.25		$31.50	$0.00	$6.45	$0.00	$0.00
1	35	$26.50	$927.50	$6.10	$213.50	$1,141.00
0.75		$22.00	$0.00	$5.85	$0.00	$0.00
0.5		$19.80	$0.00	$5.55	$0.00	$0.00
total Sch 80			$197,277.50		$26,335.00	$223,612.50

total steam and condensate piping and insulation cost	$368,263.75
50% for exp joints and guides, isolation valves, traps, identification, safety factor, e	$184,131.88
total cost in new tunnel	$552,395.63
total added cost for existing tunnel	$110,479.13
Total cost in existing tunnel	$662,874.75

USDC Tunnel E Steam and Condensate

Sch. 40 black steel - less than 2" threaded, 2-1/2" and above welded.

Pipe size	pipe length (ft)	$/LF(pipe)	total pipe $	$/LF (ins.)	total ins. $	total pipe and insulation $
12		$195.00	$0.00	$26.50	$0.00	$0.00
10		$149.00	$0.00	$24.00	$0.00	$0.00
8		$125.00	$0.00	$20.50	$0.00	$0.00
6	221	$108.00	$23,868.00	$16.75	$3,701.75	$27,569.75
4		$71.50	$0.00	$13.35	$0.00	$0.00
3	815	$57.00	$46,455.00	$11.05	$9,005.75	$55,460.75
2.5		$49.00	$0.00	$10.40	$0.00	$0.00
2		$35.00	$0.00	$9.75	$0.00	$0.00
1.5		$27.00	$0.00	$9.25	$0.00	$0.00
1.25		$24.00	$0.00	$6.45	$0.00	$0.00
1		$21.00	$0.00	$6.10	$0.00	$0.00
0.75		$16.45	$0.00	$5.85	$0.00	$0.00
0.5		$15.25	$0.00	$5.55	$0.00	$0.00
total Sch 40			$70,323.00		$12,707.50	$83,030.50

Sch. 80 black steel - less than 2" threaded, 2-1/2" and above welded.

Pipe size	pipe length (ft)	$/LF(pipe)	total pipe $	$/LF (ins.)	total ins. $	total pipe and insulation $
6		$163.00	$0.00	$16.75	$0.00	$0.00
4	405	$110.00	$44,550.00	$13.35	$5,406.75	$49,956.75
3	605	$80.50	$48,702.50	$11.05	$6,685.25	$55,387.75
2.5		$66.00	$0.00	$10.40	$0.00	$0.00
2	195	$46.00	$8,970.00	$9.75	$1,901.25	$10,871.25
1.5		$35.50	$0.00	$9.25	$0.00	$0.00
1.25		$31.50	$0.00	$6.45	$0.00	$0.00
1		$26.50	$0.00	$6.10	$0.00	$0.00
0.75		$22.00	$0.00	$5.85	$0.00	$0.00
0.5		$19.80	$0.00	$5.55	$0.00	$0.00
total Sch 80			$102,222.50		$13,993.25	$116,215.75

total steam and condensate piping and insulation cost	$199,246.25
50% for exp joints and guides, isolation valves, traps, identification, safety factor, e	$99,623.13
total cost in new tunnel	$298,869.38
total added cost for existing tunnel	$59,773.88
Total cost in existing tunnel	$358,643.25

USDC Tunnel F Steam and Condensate

Sch. 40 black steel - less than 2" threaded, 2-1/2" and above welded.

Pipe size	pipe length (ft)	$/LF(pipe)	total pipe $	$/LF (ins.)	total ins. $	total pipe and insulation $
12		$195.00	$0.00	$26.50	$0.00	$0.00
10		$149.00	$0.00	$24.00	$0.00	$0.00
8		$125.00	$0.00	$20.50	$0.00	$0.00
6		$108.00	$0.00	$16.75	$0.00	$0.00
4		$71.50	$0.00	$13.35	$0.00	$0.00
3	150	$57.00	$8,550.00	$11.05	$1,657.50	$10,207.50
2.5		$49.00	$0.00	$10.40	$0.00	$0.00
2		$35.00	$0.00	$9.75	$0.00	$0.00
1.5		$27.00	$0.00	$9.25	$0.00	$0.00
1.25		$24.00	$0.00	$6.45	$0.00	$0.00
1		$21.00	$0.00	$6.10	$0.00	$0.00
0.75		$16.45	$0.00	$5.85	$0.00	$0.00
0.5		$15.25	$0.00	$5.55	$0.00	$0.00
total Sch 40			$8,550.00		$1,657.50	$10,207.50

Sch. 80 black steel - less than 2" threaded, 2-1/2" and above welded.

Pipe size	pipe length (ft)	$/LF(pipe)	total pipe $	$/LF (ins.)	total ins. $	total pipe and insulation $
6		$163.00	$0.00	$16.75	$0.00	$0.00
4		$110.00	$0.00	$13.35	$0.00	$0.00
3		$80.50	$0.00	$11.05	$0.00	$0.00
2.5		$66.00	$0.00	$10.40	$0.00	$0.00
2	210	$46.00	$9,660.00	$9.75	$2,047.50	$11,707.50
1.5		$35.50	$0.00	$9.25	$0.00	$0.00
1.25		$31.50	$0.00	$6.45	$0.00	$0.00
1		$26.50	$0.00	$6.10	$0.00	$0.00
0.75		$22.00	$0.00	$5.85	$0.00	$0.00
0.5		$19.80	$0.00	$5.55	$0.00	$0.00
total Sch 80			$9,660.00		$2,047.50	$11,707.50

total steam and condensate piping and insulation cost	$21,915.00
50% for exp joints and guides, isolation valves, traps, identification, safety factor, e	$10,957.50
total cost in new tunnel	$32,872.50
total added cost for existing tunnel	$6,574.50
Total cost in existing tunnel	$39,447.00

USDC DB-1 Steam and Condensate

Sch. 40 black steel - less than 2" threaded, 2-1/2" and above welded.

Pipe size	pipe length (ft)	$/LF(pipe)	total pipe $	$/LF (ins.)	total ins. $	total pipe and insulation $
12		$195.00	$0.00	$26.50	$0.00	$0.00
10		$149.00	$0.00	$24.00	$0.00	$0.00
8		$125.00	$0.00	$20.50	$0.00	$0.00
6	365	$108.00	$39,420.00	$16.75	$6,113.75	$45,533.75
4		$71.50	$0.00	$13.35	$0.00	$0.00
3		$57.00	$0.00	$11.05	$0.00	$0.00
2.5		$49.00	$0.00	$10.40	$0.00	$0.00
2		$35.00	$0.00	$9.75	$0.00	$0.00
1.5		$27.00	$0.00	$9.25	$0.00	$0.00
1.25		$24.00	$0.00	$6.45	$0.00	$0.00
1		$21.00	$0.00	$6.10	$0.00	$0.00
0.75		$16.45	$0.00	$5.85	$0.00	$0.00
0.5		$15.25	$0.00	$5.55	$0.00	$0.00
total Sch 40			$39,420.00		$6,113.75	$45,533.75

Sch. 80 black steel - less than 2" threaded, 2-1/2" and above welded.

Pipe size	pipe length (ft)	$/LF(pipe)	total pipe $	$/LF (ins.)	total ins. $	total pipe and insulation $
6		$163.00	$0.00	$16.75	$0.00	$0.00
4		$110.00	$0.00	$13.35	$0.00	$0.00
3	365	$80.50	$29,382.50	$11.05	$4,033.25	$33,415.75
2.5		$66.00	$0.00	$10.40	$0.00	$0.00
2		$46.00	$0.00	$9.75	$0.00	$0.00
1.5		$35.50	$0.00	$9.25	$0.00	$0.00
1.25		$31.50	$0.00	$6.45	$0.00	$0.00
1		$26.50	$0.00	$6.10	$0.00	$0.00
0.75		$22.00	$0.00	$5.85	$0.00	$0.00
0.5		$19.80	$0.00	$5.55	$0.00	$0.00
total Sch 80			$29,382.50		$4,033.25	$33,415.75

total steam and condensate piping and insulation cost	$78,949.50
50% for exp joints and guides, isolation valves, traps, identification, safety factor, e	$39,474.75
total cost	$118,424.25
total added cost for direct buried	$36,500.00
Total cost if direct buried	$154,924.25

USDC DB-2 Steam and Condensate

Sch. 40 black steel - less than 2" threaded, 2-1/2" and above welded.

Pipe size	pipe length (ft)	$/LF(pipe)	total pipe $	$/LF (ins.)	total ins. $	total pipe and insulation $
12		$195.00	$0.00	$26.50	$0.00	$0.00
10		$149.00	$0.00	$24.00	$0.00	$0.00
8		$125.00	$0.00	$20.50	$0.00	$0.00
6	160	$108.00	$17,280.00	$16.75	$2,680.00	$19,960.00
4	290	$71.50	$20,735.00	$13.35	$3,871.50	$24,606.50
3	45	$57.00	$2,565.00	$11.05	$497.25	$3,062.25
2.5		$49.00	$0.00	$10.40	$0.00	$0.00
2		$35.00	$0.00	$9.75	$0.00	$0.00
1.5		$27.00	$0.00	$9.25	$0.00	$0.00
1.25		$24.00	$0.00	$6.45	$0.00	$0.00
1		$21.00	$0.00	$6.10	$0.00	$0.00
0.75		$16.45	$0.00	$5.85	$0.00	$0.00
0.5		$15.25	$0.00	$5.55	$0.00	$0.00
total Sch 40			$40,580.00		$7,048.75	$47,628.75

Sch. 80 black steel - less than 2" threaded, 2-1/2" and above welded.

Pipe size	pipe length (ft)	$/LF(pipe)	total pipe $	$/LF (ins.)	total ins. $	total pipe and insulation $
6		$163.00	$0.00	$16.75	$0.00	$0.00
4		$110.00	$0.00	$13.35	$0.00	$0.00
3		$80.50	$0.00	$11.05	$0.00	$0.00
2.5	160	$66.00	$10,560.00	$10.40	$1,664.00	$12,224.00
2	290	$46.00	$13,340.00	$9.75	$2,827.50	$16,167.50
1.5	210	$35.50	$7,455.00	$9.25	$1,942.50	$9,397.50
1.25		$31.50	$0.00	$6.45	$0.00	$0.00
1		$26.50	$0.00	$6.10	$0.00	$0.00
0.75		$22.00	$0.00	$5.85	$0.00	$0.00
0.5		$19.80	$0.00	$5.55	$0.00	$0.00
total Sch 80			$31,355.00		$6,434.00	$37,789.00

total steam and condensate piping and insulation cost	$85,417.75
50% for exp joints and guides, isolation valves, traps, identification, safety factor, e	$42,708.88
total cost	$128,126.63
total added cost for direct buried	$49,500.00
Total cost if direct buried	$177,626.63

USDC DB-3 Steam and Condensate

Sch. 40 black steel - less than 2" threaded, 2-1/2" and above welded.

Pipe size	pipe length (ft)	$/LF(pipe)	total pipe $	$/LF (ins.)	total ins. $	total pipe and insulation $
12		$195.00	$0.00	$26.50	$0.00	$0.00
10		$149.00	$0.00	$24.00	$0.00	$0.00
8		$125.00	$0.00	$20.50	$0.00	$0.00
6		$108.00	$0.00	$16.75	$0.00	$0.00
4		$71.50	$0.00	$13.35	$0.00	$0.00
3		$57.00	$0.00	$11.05	$0.00	$0.00
2.5		$49.00	$0.00	$10.40	$0.00	$0.00
2		$35.00	$0.00	$9.75	$0.00	$0.00
1.5		$27.00	$0.00	$9.25	$0.00	$0.00
1.25		$24.00	$0.00	$6.45	$0.00	$0.00
1		$21.00	$0.00	$6.10	$0.00	$0.00
0.75		$16.45	$0.00	$5.85	$0.00	$0.00
0.5		$15.25	$0.00	$5.55	$0.00	$0.00
total Sch 40			$0.00		$0.00	$0.00

Sch. 80 black steel - less than 2" threaded, 2-1/2" and above welded.

Pipe size	pipe length (ft)	$/LF(pipe)	total pipe $	$/LF (ins.)	total ins. $	total pipe and insulation $
6		$163.00	$0.00	$16.75	$0.00	$0.00
4		$110.00	$0.00	$13.35	$0.00	$0.00
3	365	$80.50	$29,382.50	$11.05	$4,033.25	$33,415.75
2.5		$66.00	$0.00	$10.40	$0.00	$0.00
2		$46.00	$0.00	$9.75	$0.00	$0.00
1.5		$35.50	$0.00	$9.25	$0.00	$0.00
1.25		$31.50	$0.00	$6.45	$0.00	$0.00
1		$26.50	$0.00	$6.10	$0.00	$0.00
0.75		$22.00	$0.00	$5.85	$0.00	$0.00
0.5		$19.80	$0.00	$5.55	$0.00	$0.00
total Sch 80			$29,382.50		$4,033.25	$33,415.75

total steam and condensate piping and insulation cost	$33,415.75
50% for exp joints and guides, isolation valves, traps, identification, safety factor, e	$16,707.88
total cost	$50,123.63
total added cost for direct buried	$36,500.00
Total cost if direct buried	$86,623.63

USDC DB-4 Steam and Condensate

Sch. 40 black steel - less than 2" threaded, 2-1/2" and above welded.

Pipe size	pipe length (ft)	$/LF(pipe)	total pipe $	$/LF (ins.)	total ins. $	total pipe and insulation $
12		$195.00	$0.00	$26.50	$0.00	$0.00
10		$149.00	$0.00	$24.00	$0.00	$0.00
8		$125.00	$0.00	$20.50	$0.00	$0.00
6		$108.00	$0.00	$16.75	$0.00	$0.00
4	290	$71.50	$20,735.00	$13.35	$3,871.50	$24,606.50
3	165	$57.00	$9,405.00	$11.05	$1,823.25	$11,228.25
2.5	55	$49.00	$2,695.00	$10.40	$572.00	$3,267.00
2	440	$35.00	$15,400.00	$9.75	$4,290.00	$19,690.00
1.5	15	$27.00	$405.00	$9.25	$138.75	$543.75
1.25		$24.00	$0.00	$6.45	$0.00	$0.00
1		$21.00	$0.00	$6.10	$0.00	$0.00
0.75		$16.45	$0.00	$5.85	$0.00	$0.00
0.5		$15.25	$0.00	$5.55	$0.00	$0.00
total Sch 40			$48,640.00		$10,695.50	$59,335.50

Sch. 80 black steel - less than 2" threaded, 2-1/2" and above welded.

Pipe size	pipe length (ft)	$/LF(pipe)	total pipe $	$/LF (ins.)	total ins. $	total pipe and insulation $
6		$163.00	$0.00	$16.75	$0.00	$0.00
4		$110.00	$0.00	$13.35	$0.00	$0.00
3		$80.50	$0.00	$11.05	$0.00	$0.00
2.5		$66.00	$0.00	$10.40	$0.00	$0.00
2	950	$46.00	$43,700.00	$9.75	$9,262.50	$52,962.50
1.5		$35.50	$0.00	$9.25	$0.00	$0.00
1.25		$31.50	$0.00	$6.45	$0.00	$0.00
1	15	$26.50	$397.50	$6.10	$91.50	$489.00
0.75		$22.00	$0.00	$5.85	$0.00	$0.00
0.5		$19.80	$0.00	$5.55	$0.00	$0.00
total Sch 80			$44,097.50		$9,354.00	$53,451.50

total steam and condensate piping and insulation cost	$112,787.00
50% for exp joints and guides, isolation valves, traps, identification, safety factor, e	$56,393.50
total cost	$169,180.50
total added cost for direct buried	$96,500.00
Total cost if direct buried	$265,680.50

USDC TR-1 Steam and Condensate

Sch. 40 black steel - less than 2" threaded, 2-1/2" and above welded.

Pipe size	pipe length (ft)	$/LF(pipe)	total pipe $	$/LF (ins.)	total ins. $	total pipe and insulation $
12		$195.00	$0.00	$26.50	$0.00	$0.00
10		$149.00	$0.00	$24.00	$0.00	$0.00
8		$125.00	$0.00	$20.50	$0.00	$0.00
6		$108.00	$0.00	$16.75	$0.00	$0.00
4	160	$71.50	$11,440.00	$13.35	$2,136.00	$13,576.00
3		$57.00	$0.00	$11.05	$0.00	$0.00
2.5	405	$49.00	$19,845.00	$10.40	$4,212.00	$24,057.00
2	20	$35.00	$700.00	$9.75	$195.00	$895.00
1.5	20	$27.00	$540.00	$9.25	$185.00	$725.00
1.25		$24.00	$0.00	$6.45	$0.00	$0.00
1		$21.00	$0.00	$6.10	$0.00	$0.00
0.75		$16.45	$0.00	$5.85	$0.00	$0.00
0.5		$15.25	$0.00	$5.55	$0.00	$0.00
total Sch 40			$32,525.00		$6,728.00	$39,253.00

Sch. 80 black steel - less than 2" threaded, 2-1/2" and above welded.

Pipe size	pipe length (ft)	$/LF(pipe)	total pipe $	$/LF (ins.)	total ins. $	total pipe and insulation $
6		$163.00	$0.00	$16.75	$0.00	$0.00
4		$110.00	$0.00	$13.35	$0.00	$0.00
3		$80.50	$0.00	$11.05	$0.00	$0.00
2.5		$66.00	$0.00	$10.40	$0.00	$0.00
2	160	$46.00	$7,360.00	$9.75	$1,560.00	$8,920.00
1.5	20	$35.50	$710.00	$9.25	$185.00	$895.00
1.25	425	$31.50	$13,387.50	$6.45	$2,741.25	$16,128.75
1		$26.50	$0.00	$6.10	$0.00	$0.00
0.75		$22.00	$0.00	$5.85	$0.00	$0.00
0.5		$19.80	$0.00	$5.55	$0.00	$0.00
total Sch 80			$21,457.50		$4,486.25	$25,943.75

total steam and condensate piping and insulation cost	$65,196.75
50% for exp joints and guides, isolation valves, traps, identification, safety factor, e	$32,598.38
total cost	$97,795.13
total added cost for direct buried	$60,500.00
Total cost if direct buried	$158,295.13

USDC TR-2 Steam and Condensate

Sch. 40 black steel - less than 2" threaded, 2-1/2" and above welded.

Pipe size	pipe length (ft)	$/LF(pipe)	total pipe $	$/LF (ins.)	total ins. $	total pipe and insulation $
12		$195.00	$0.00	$26.50	$0.00	$0.00
10		$149.00	$0.00	$24.00	$0.00	$0.00
8		$125.00	$0.00	$20.50	$0.00	$0.00
6		$108.00	$0.00	$16.75	$0.00	$0.00
4	210	$71.50	$15,015.00	$13.35	$2,803.50	$17,818.50
3	30	$57.00	$1,710.00	$11.05	$331.50	$2,041.50
2.5	125	$49.00	$6,125.00	$10.40	$1,300.00	$7,425.00
2		$35.00	$0.00	$9.75	$0.00	$0.00
1.5		$27.00	$0.00	$9.25	$0.00	$0.00
1.25		$24.00	$0.00	$6.45	$0.00	$0.00
1		$21.00	$0.00	$6.10	$0.00	$0.00
0.75		$16.45	$0.00	$5.85	$0.00	$0.00
0.5		$15.25	$0.00	$5.55	$0.00	$0.00
total Sch 40			$22,850.00		$4,435.00	$27,285.00

Sch. 80 black steel - less than 2" threaded, 2-1/2" and above welded.

Pipe size	pipe length (ft)	$/LF(pipe)	total pipe $	$/LF (ins.)	total ins. $	total pipe and insulation $
6		$163.00	$0.00	$16.75	$0.00	$0.00
4		$110.00	$0.00	$13.35	$0.00	$0.00
3		$80.50	$0.00	$11.05	$0.00	$0.00
2.5		$66.00	$0.00	$10.40	$0.00	$0.00
2	210	$46.00	$9,660.00	$9.75	$2,047.50	$11,707.50
1.5	30	$35.50	$1,065.00	$9.25	$277.50	$1,342.50
1.25	125	$31.50	$3,937.50	$6.45	$806.25	$4,743.75
1		$26.50	$0.00	$6.10	$0.00	$0.00
0.75		$22.00	$0.00	$5.85	$0.00	$0.00
0.5		$19.80	$0.00	$5.55	$0.00	$0.00
total Sch 80			$14,662.50		$3,131.25	$17,793.75

total steam and condensate piping and insulation cost	$45,078.75
50% for exp joints and guides, isolation valves, traps, identification, safety factor, e	$22,539.38
total cost	$67,618.13
total added cost for direct buried	$36,500.00
Total cost if direct buried	$104,118.13

USDC TR-3 Steam and Condensate

Sch. 40 black steel - less than 2" threaded, 2-1/2" and above welded.

Pipe size	pipe length (ft)	$/LF(pipe)	total pipe $	$/LF (ins.)	total ins. $	total pipe and insulation $
12		$195.00	$0.00	$26.50	$0.00	$0.00
10		$149.00	$0.00	$24.00	$0.00	$0.00
8		$125.00	$0.00	$20.50	$0.00	$0.00
6		$108.00	$0.00	$16.75	$0.00	$0.00
4		$71.50	$0.00	$13.35	$0.00	$0.00
3		$57.00	$0.00	$11.05	$0.00	$0.00
2.5		$49.00	$0.00	$10.40	$0.00	$0.00
2	200	$35.00	$7,000.00	$9.75	$1,950.00	$8,950.00
1.5		$27.00	$0.00	$9.25	$0.00	$0.00
1.25		$24.00	$0.00	$6.45	$0.00	$0.00
1		$21.00	$0.00	$6.10	$0.00	$0.00
0.75		$16.45	$0.00	$5.85	$0.00	$0.00
0.5		$15.25	$0.00	$5.55	$0.00	$0.00
total Sch 40			$7,000.00		$1,950.00	$8,950.00

Sch. 80 black steel - less than 2" threaded, 2-1/2" and above welded.

Pipe size	pipe length (ft)	$/LF(pipe)	total pipe $	$/LF (ins.)	total ins. $	total pipe and insulation $
6		$163.00	$0.00	$16.75	$0.00	$0.00
4		$110.00	$0.00	$13.35	$0.00	$0.00
3		$80.50	$0.00	$11.05	$0.00	$0.00
2.5		$66.00	$0.00	$10.40	$0.00	$0.00
2	200	$46.00	$9,200.00	$9.75	$1,950.00	$11,150.00
1.5		$35.50	$0.00	$9.25	$0.00	$0.00
1.25		$31.50	$0.00	$6.45	$0.00	$0.00
1		$26.50	$0.00	$6.10	$0.00	$0.00
0.75		$22.00	$0.00	$5.85	$0.00	$0.00
0.5		$19.80	$0.00	$5.55	$0.00	$0.00
total Sch 80			$9,200.00		$1,950.00	$11,150.00

total steam and condensate piping and insulation cost	$20,100.00
50% for exp joints and guides, isolation valves, traps, identification, safety factor, e	$10,050.00
total cost	$30,150.00
total added cost for direct buried	$20,000.00
Total cost if direct buried	$50,150.00

USDC Tunnel D Chilled

Sch. 40 black steel - less than 2" threaded, 2-1/2" and above welded.

Pipe size	pipe length (ft)	$/LF(pipe)	total pipe $	$/LF (ins.)	total ins. $	total pipe and insulation $
12		$195.00	$0.00	$26.50	$0.00	$0.00
10	70	$149.00	$10,430.00	$24.00	$1,680.00	$12,110.00
8		$125.00	$0.00	$20.50	$0.00	$0.00
6	1540	$108.00	$166,320.00	$16.75	$25,795.00	$192,115.00
4	50	$71.50	$3,575.00	$13.35	$667.50	$4,242.50
3		$57.00	$0.00	$11.05	$0.00	$0.00
2.5		$49.00	$0.00	$10.40	$0.00	$0.00
2		$35.00	$0.00	$9.75	$0.00	$0.00
1.5		$27.00	$0.00	$9.25	$0.00	$0.00
1.25		$24.00	$0.00	$6.45	$0.00	$0.00
1		$21.00	$0.00	$6.10	$0.00	$0.00
0.75		$16.45	$0.00	$5.85	$0.00	$0.00
0.5		$15.25	$0.00	$5.55	$0.00	$0.00
total Sch 40			$180,325.00		$28,142.50	$208,467.50

total pipe and insulation	$208,467.50
10% for isolation valves, identification, safety factor, etc.	$20,846.75
total cost	$229,314.25

USDC Tunnel E Chilled

Sch. 40 black steel - less than 2" threaded, 2-1/2" and above welded.

Pipe size	pipe length (ft)	$/LF(pipe)	total pipe $	$/LF (ins.)	total ins. $	total pipe and insulation $
12		$195.00	$0.00	$26.50	$0.00	$0.00
10		$149.00	$0.00	$24.00	$0.00	$0.00
8		$125.00	$0.00	$20.50	$0.00	$0.00
6	440	$108.00	$47,520.00	$16.75	$7,370.00	$54,890.00
4	1200	$71.50	$85,800.00	$13.35	$16,020.00	$101,820.00
3	490	$57.00	$27,930.00	$11.05	$5,414.50	$33,344.50
2.5		$49.00	$0.00	$10.40	$0.00	$0.00
2		$35.00	$0.00	$9.75	$0.00	$0.00
1.5		$27.00	$0.00	$9.25	$0.00	$0.00
1.25		$24.00	$0.00	$6.45	$0.00	$0.00
1		$21.00	$0.00	$6.10	$0.00	$0.00
0.75		$16.45	$0.00	$5.85	$0.00	$0.00
0.5		$15.25	$0.00	$5.55	$0.00	$0.00
total Sch 40			$161,250.00		$28,804.50	$190,054.50

total pipe and insulation	$190,054.50
10% for isolation valves, identification, safety factor, etc.	$19,005.45
total cost	$209,059.95

Steam Trap Selection Guide*

Application	1st Choice						2nd Choice					
	Float & Thermostatic	Thermo-Dynamic	Balanced Pressure	Bimetallic	Liquid Expansion	Inverted Bucket	Float & Thermostatic	Thermo-Dynamic	Balanced Pressure	Bimetallic	Liquid Expansion	Inverted Bucket
Steam Mains to 30 psig	X											X
30-400 psig		X										X
to 600 psig		X										X
to 900 psig		X										X
to 2000 psig		X										X
with Superheat		X								X		
Separators	X											X
Steam Tracers Critical		X							X			
Non-Critical			X					X				
Heating Equipment												
Shell & Tube Heat Exchangers	X											X
Heating Coils	X											X
Unit Heaters	X											X
Plate & Frame Heat Exchangers	X											X
Radiators			X									
General Process Equipment												
to 30 psig	X											X
to 200 psig	X											X
to 465 psig	X											X
to 600 psig						X						
to 900 psig						X						
to 2000 psig						X						
Hospital Equipment												
Autoclaves	X								X			
Sterilizers	X								X			
Fuel Oil Heating												
Bulk Storage Tanks			X				X					
Line Heaters	X											
Tanks & Vats												
Bulk Storage Tanks			X				X					
Process Vats	X							X				
Vulcanizers		X					X					
Evaporators	X											X
Reboilers	X											X
Rotating Cylinders	X											
Freeze Protection					X							

* Spirax Sarco Selection Guide

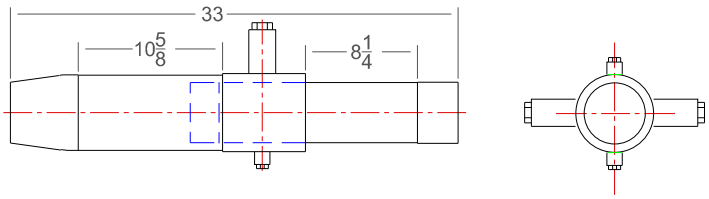

4TP2W 121 8

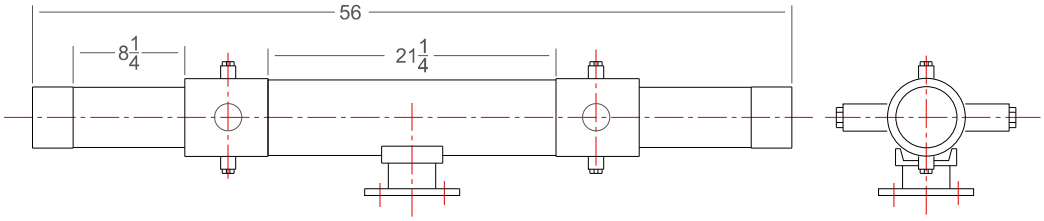

4TP2W 222 8

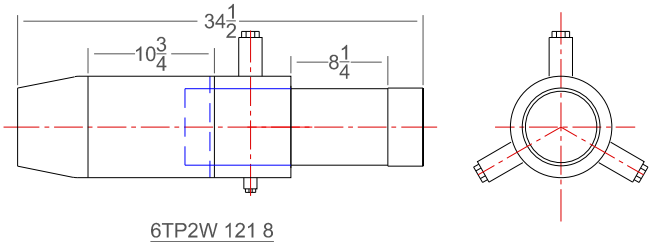

6TP2W 121 8

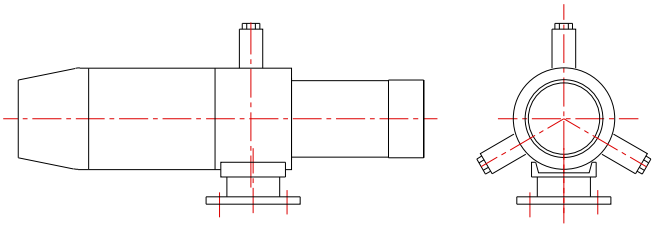

6TP2W 122 8

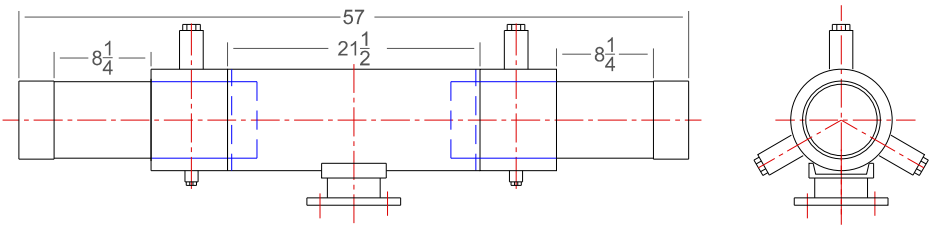

6TP2W 222 8

TYPICAL EXPANSION JOINTS DETAIL

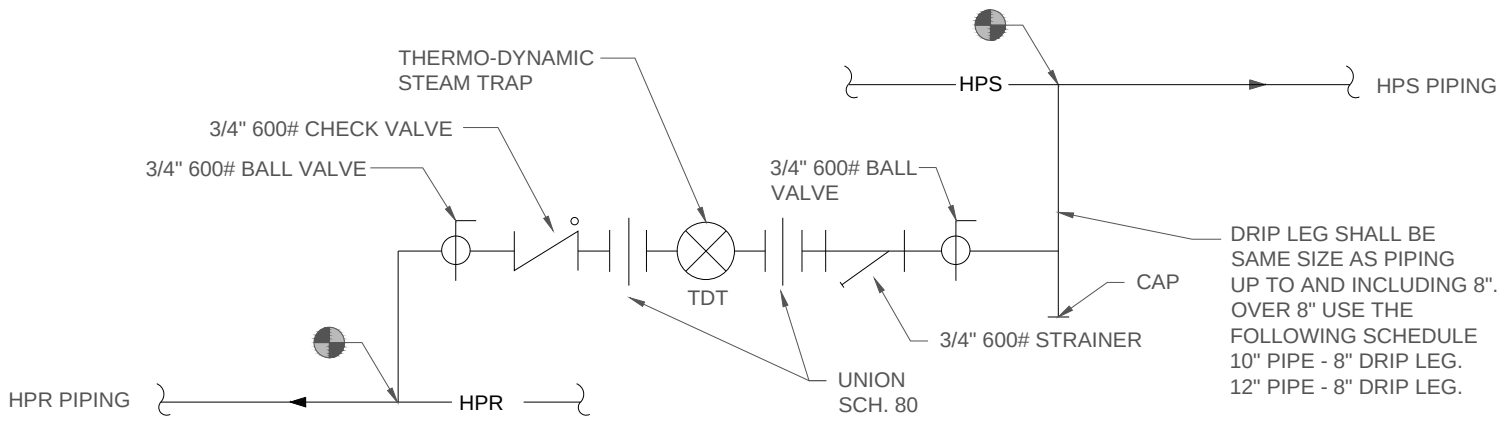

TYPICAL DRIP LEG AND TRAP ASSEMBLY DETAIL

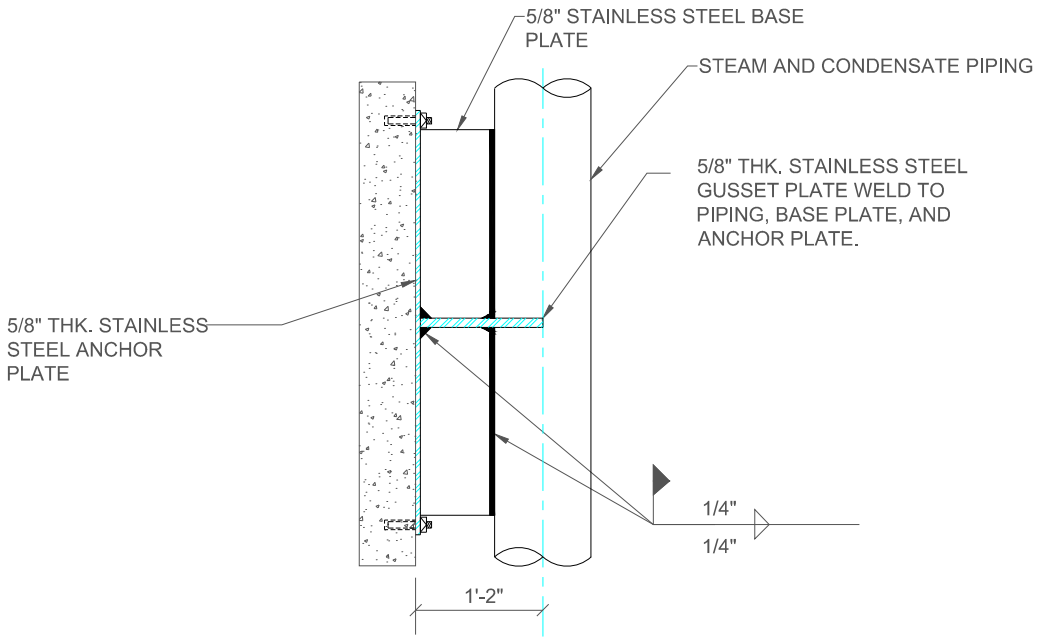

PLAN VIEW

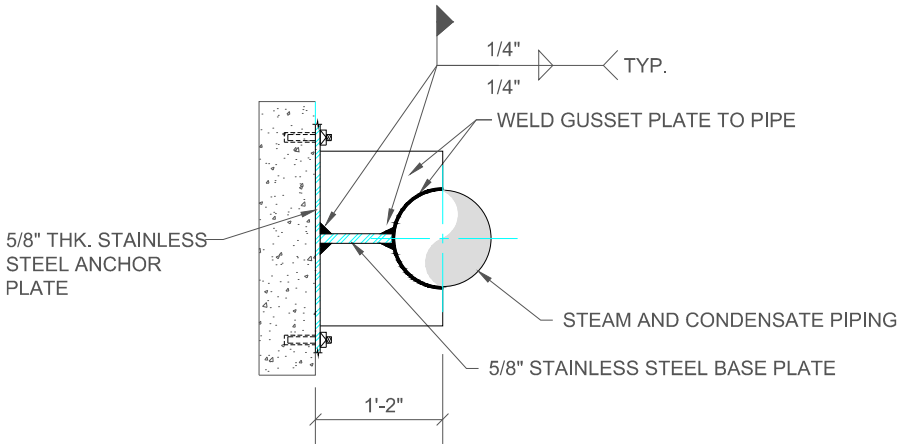

SECTION VIEW

TYPICAL STEAM & COND. ANCHOR DETAIL

NOTE

INSULATION (20 MIL THK.) AROUND PIPING SHALL BE LOCATED INSIDE THE GUIDE PER MANUFACTURERS INSTRUCTIONS AND RECOMMENDATIONS

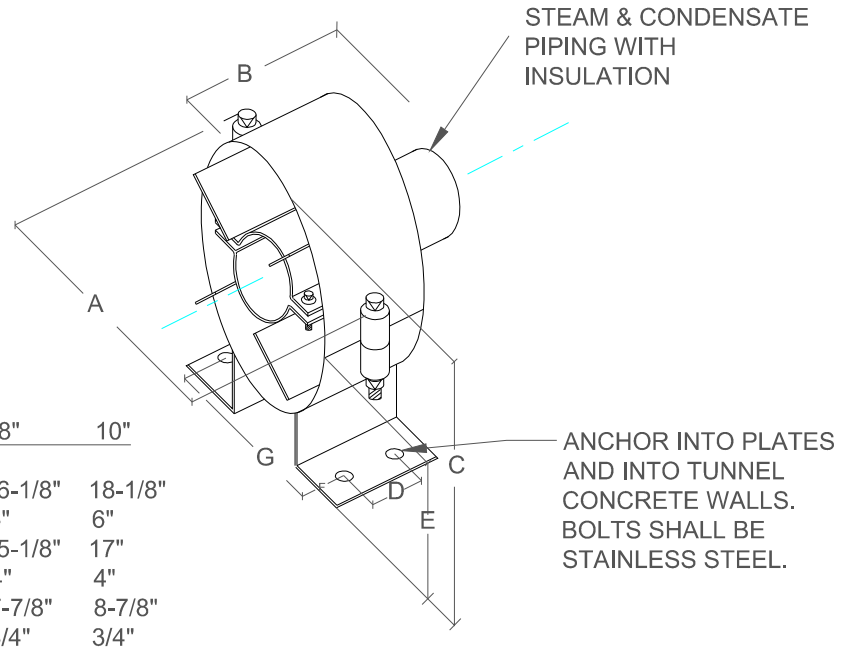

	2"	2-1/2"	3"	4"	6"	8"	10"
A	10-1/8"	10-1/8"	10-1/8"	12-1/8"	14-1/8"	16-1/8"	18-1/8"
B	3"	3"	3"	4"	4"	6"	6"
C	9-1/4"	9-1/4"	9-1/4"	11-5/8"	13-3/8"	15-1/8"	17"
D	1-3/4"	1-3/4"	1-3/4"	2-3/4"	2-3/4"	4"	4"
E	5-1/4"	5-1/4"	5-1/4"	6-1/4"	7"	7-7/8"	8-7/8"
F	5/8"	5/8"	5/8"	5/8"	5/8"	3/4"	3/4"
G	6-1/8"	6-1/8"	6-1/8"	7"	8-1/4"	9-7/8"	10-7/8"

1. COORDINATE GUIDE BODY SIZE WITH 20 MIL THK. INSULATION THICKNESS.
2. DIMENSIONS ARE TAKEN FROM B-LINE.
3. GUIDE SHALL HAVE A COATED FINISH.

TYPICAL PIPE GUIDE DETAIL

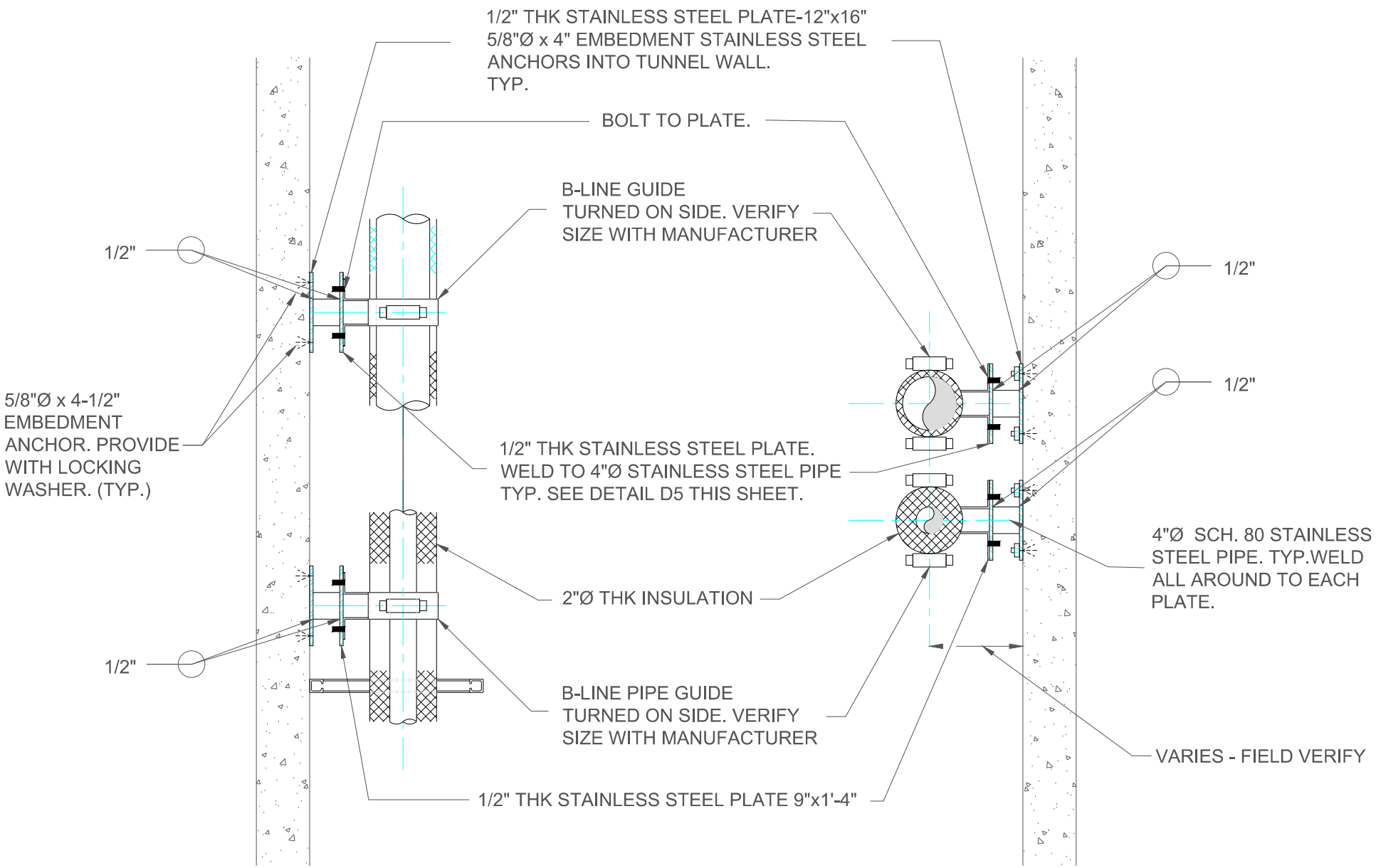

TYPICAL PIPE GUIDE DETAIL

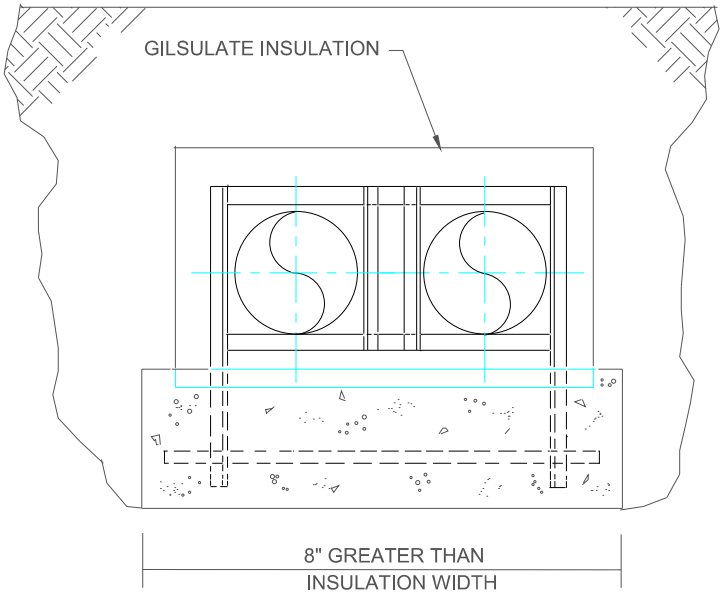

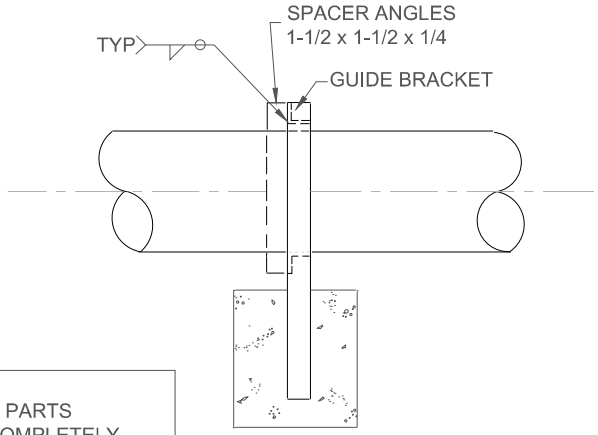

NOTE:
ALL METAL PARTS MUST BE COMPLETELY ENCLOSED IN GILSULATE. CONCRETE AND METAL SURFACES SHALL BE COATED WITH BITUMASTIC.

TYPICAL DIRECT BURIED PIPING ANCHOR DETAIL

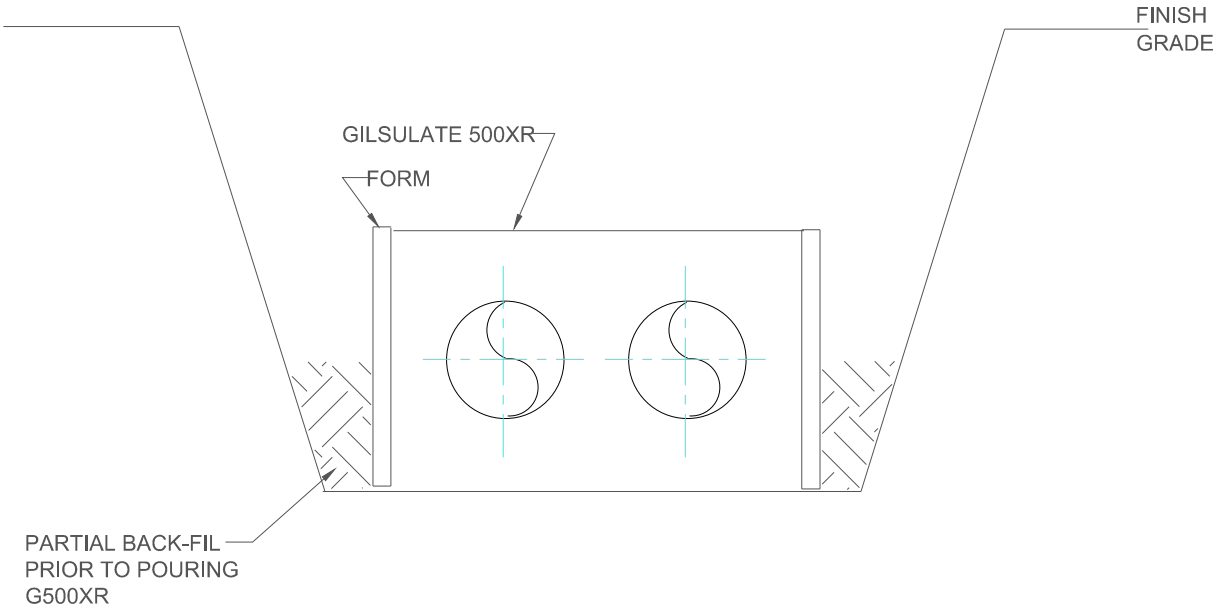

TYPICAL DIRECT BURIED PIPE CROSS SECTION DETAIL

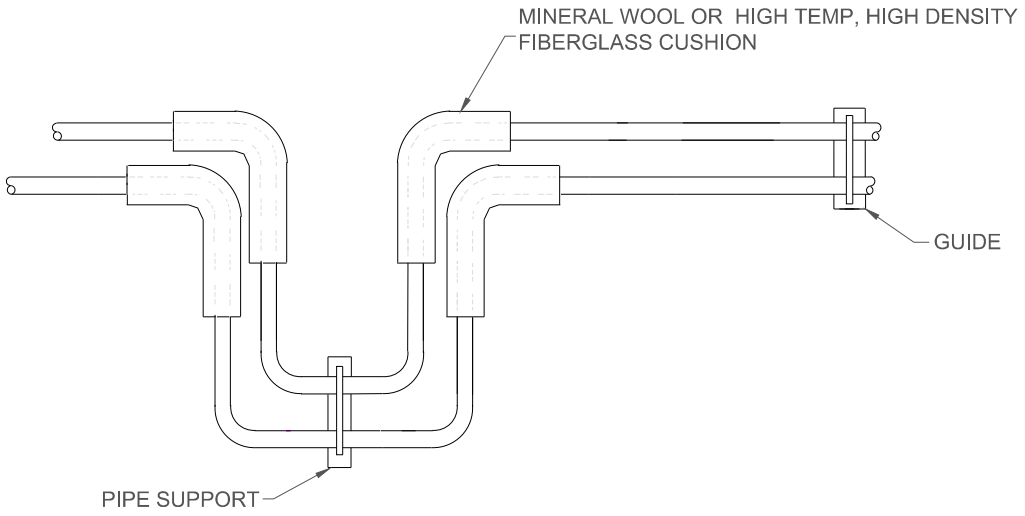

TYPICAL DIRECT BURIED PIPING EXPANSION LOOP DETAIL

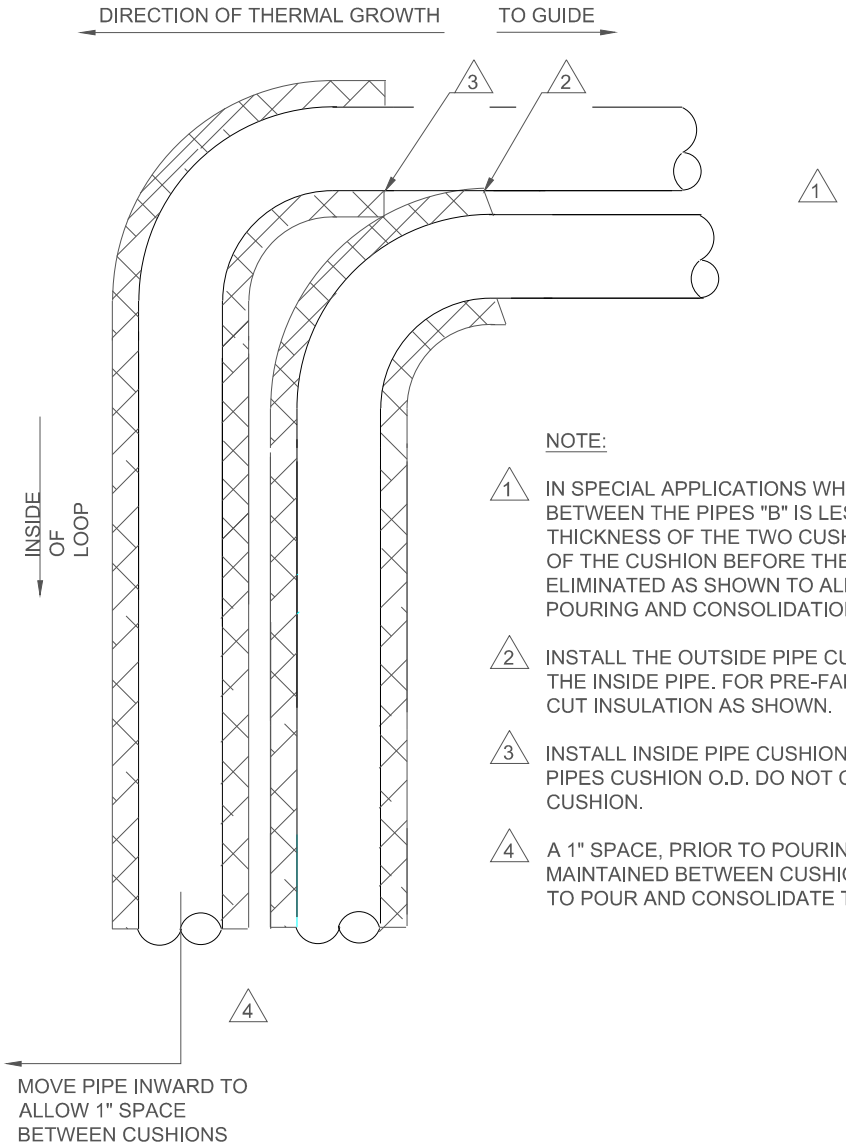

NOTE:

1. IN SPECIAL APPLICATIONS WHERE THE SPACE BETWEEN THE PIPES "B" IS LESS THAN THE THICKNESS OF THE TWO CUSHIONS, A PORTION OF THE CUSHION BEFORE THE LOOP MAY BE ELIMINATED AS SHOWN TO ALLOW FOR PROPER POURING AND CONSOLIDATION OF THE G500.
2. INSTALL THE OUTSIDE PIPE CUSHION UNTIL IT HITS THE INSIDE PIPE. FOR PRE-FAB ELBOW CUSHIONS CUT INSULATION AS SHOWN.
3. INSTALL INSIDE PIPE CUSHION UP TO THE OUTSIDE PIPES CUSHION O.D. DO NOT COMPRESS EITHER CUSHION.
4. A 1" SPACE, PRIOR TO POURING G500, MUST BE MAINTAINED BETWEEN CUSHIONS INSIDE THE LOOP TO POUR AND CONSOLIDATE THE GILSULATE.

TYPICAL DIRECT BURIED SPECIAL CUSHION INSTALLATION DETAIL

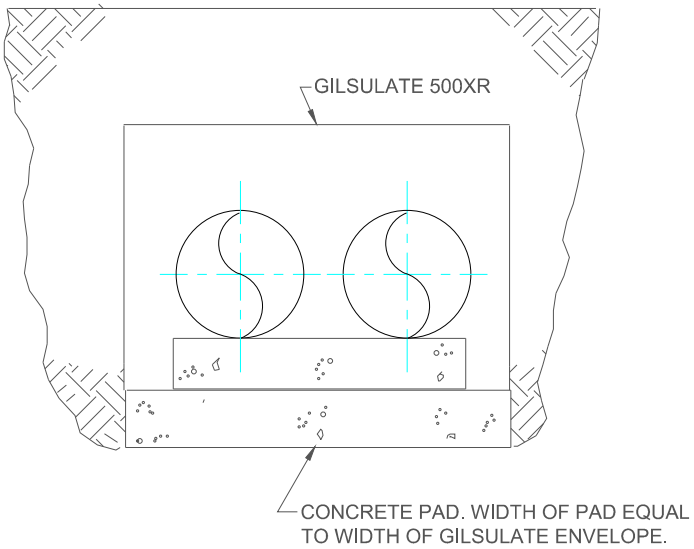

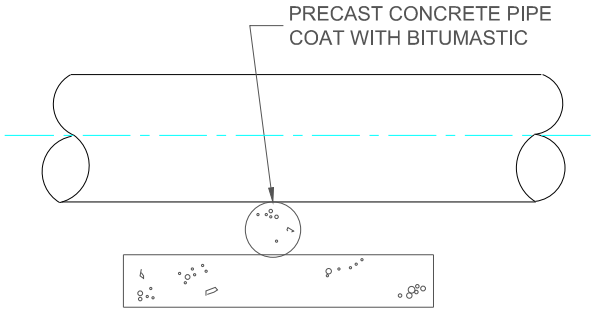

TYPICAL DIRECT BURIED PIPING SUPPORT AT EXPANSION LOOP DETAIL

THERMAL PAK TP2 EXPANSION JOINTS

Standard and Custom Designs for
PACKING INJECTION UNDER FULL LINE PRESSURE

Field Proven Designs for High Pressure Cogeneration Piping Systems

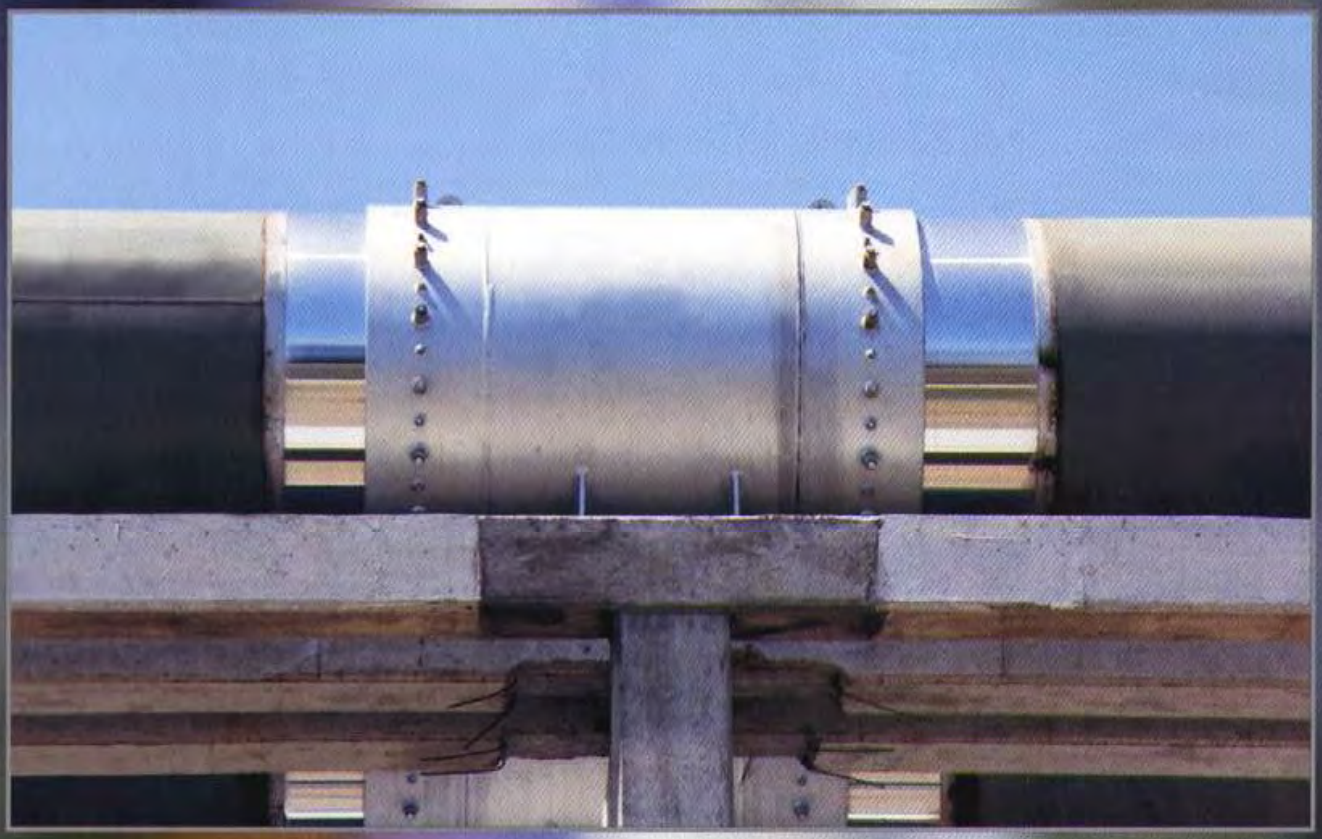

Bulletin: TP-698

ADVANCED THERMAL SYSTEMS, INC.

"Products and Solutions For Pipe Movement"

STANDARD AND CUSTOM DESIGNS for use with STEAM, HOT/CHILLED WATER, OIL, GAS and Other Process Fluids

The ATS **Thermal Pak "TP2"** Slip Type Expansion Joint is the **CORRECT** Choice for accommodating the thermal changes that occur in the straight runs of a piping system. The TP2 is constructed of materials that have strength equal to or greater than the pipeline in which it is installed, therefore, there is never a concern that an unscheduled outage will occur due to the expansion joint. If a leak should occur, additional packing can be ***SAFELY*** added to the expansion joint through the integral packing cylinders while the system is at full operating pressure.

ATS has been the ***INDUSTRY INNOVATOR*** since the "TP2" was first introduced in 1968. All Technical improvements to packed slip type expansion joints since 1968 have been introduced by ATS.

Here are a few of the ATS Introduced Improvements:

- Self-Lubricated injectable packing to eliminate maintenance associated with periodic lubrication.
- Packing cylinders welded in place in lieu of threaded in place to maximize personnel safety.
- Sliding slips from heavier wall pipe to preclude slip collapse.
- **"Corro-Cote Plus"** - Dual plating system consisting of industrial hard chrome over crack free hard chrome.
- **"HPI"** - An asbestos-free self-lubricating injectable packing for use up to 1000°F. Currently the only injectable packing with a field record of reliability in installations over 600°F.
- Low Friction guide inserts at integral internal and external guide surfaces to protect sliding slip and prevent binding and/or scoring.
- Five Year Leak Free Warranty.
- Packing Cylinders with Integral Safety Valve to allow SAFE packing injection to 1000 psig.
- **SAF-T-PACKER** - the only safe and effective way to loosen or remove impacted injectable packing below the packing cylinder's safety valve without blow back.
- Cycle testing to verify slip movement and packing density.

950 PSIG - 760°F ATS - The Industry Leader

Shown on the right is one of the two 14" Double TP2 Expansion Joints furnished to Minnesota Power and Light Company for use in a steam transmission line in Duluth, MN. These expansion joints were furnished with Schedule 100 Sliding Slips and Type "C" Packing Cylinders and have been in operation since 1987 conveying 950 PSIG - 760°F Steam. This installation is the highest operating pressure application for any packed expansion joint. Also installed were two (2) 8" TP2 Expansion Joints in the condensate return line constructed of all T-304 stainless steel.

High Pressure... High Temperature... High Performance, plus Safety.

Industry requirements for today's high pressure steam transmission systems accompanied by higher temperatures have dictated a requirement for a more reliable expansion joint that is designed for safe packing injection under full line pressure and not subject to the various types of failures that require system depressurization for replacement.

Type "C" Packing Cylinder Retainer with Cap Plug (For pressure to 1000 PSIG)

Shown above is one of 67 - 18" TP2 Expansion Joints furnished to Northern States Power Company (now known as NRG Energy) in 1984. The units are in a 5-1/2-mile long pipeline located in St. Paul, MN, which supplies steam to a paper mill at 875 PSIG - 800°F. These expansion joints were furnished with 32" Traverse Slips, ATS Type "C" Packing Cylinders (to allow SAFE packing injection), slip adjustment rods (see page 12) and leak detector probes.

The ATS TP2's were supplied to replace externally pressurized bellows expansion joints which were furnished with multi-ply Inconel 600 bellows (some had pure Nickel) that had failed after less than one year in service. The steam line has not had an interruption in service caused by the ATS Expansion Joints since their installation in 1984.

Oil Refining Industry

World's largest expansion joint designed for "Packing Injection under full pressure."

Shown are two of six - 54"-16" x 16" Traverse TP2's furnished to a midwest refinery for flare gas service. Over 33 TP2's, sizes 24" to 54" have been installed at this one refinery since 1976 for flare gas service, a testimony to ATS's quality.

Pictured Below are five of the 587 TP2 Expansion Joints up to 36" diameter installed in the MTHW & CW Piping System at the King Saud University, Riyadh, Saudi Arabia. The TP2's are pre-insulated and encapsulated with 1/4" FRP.

Typical Users of Standard and Custom Designs

ENERGY COMPANIES
Trigen Philadelphia Energy Co.
Trigen Boston Energy Co.
Con Edison Company of New York
Indianapolis Power and Light Co.
NRG Energy
Cleveland Energy Co.

INSTITUTIONS
Syracuse University
Cornell University
Indiana University
Pennsylvania State University
University of Minnesota
Univ. of Calif. at San Diego

INDUSTRIAL
AK Steel
Koch Refining Co.
General Motors
Newport News Shipbuilding
Boeing Company
Washington National Airport

Phone: 716-681-1800 Fax: 716-681-0228 Toll Free: 800-443-9194
Internet Address: http://www.localnet.com/~ats

Companies Whose Business is Selling Steam Depend on the TP2 to Keep Their Distribution Systems On Line

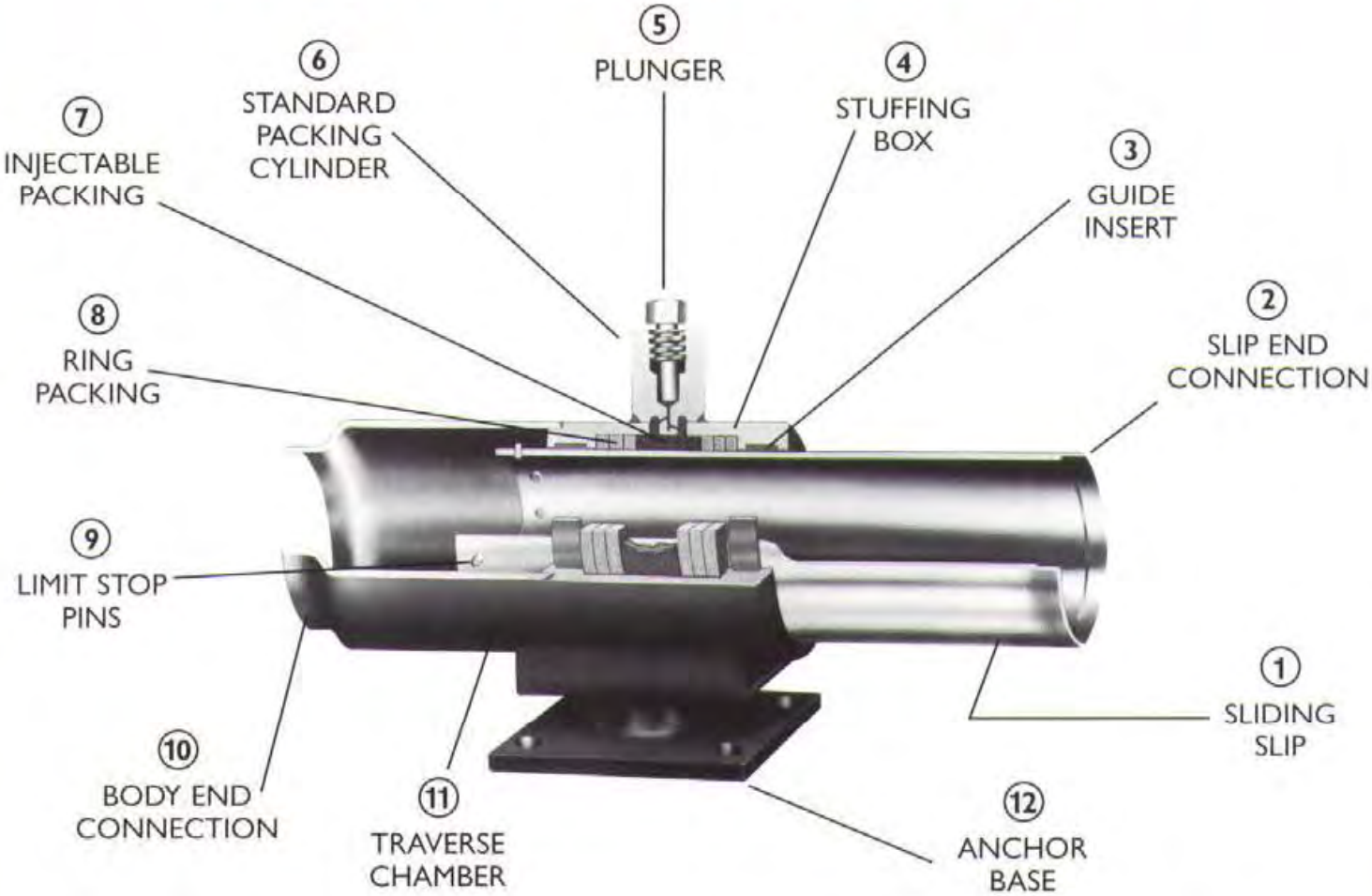

5 YEAR WARRANTY and SERVICE GUARANTEE

- **WARRANTY TERMS**

Advanced Thermal Systems, Inc. Packed Expansion Joints are sold subject to the mutual agreement that they are warranted by ATS to be free from defects in material and workmanship but ATS's liability and the buyer's exclusive remedy shall be limited to repair or replacement without charge, at ATS's factory, of any material defects which become apparent within five years of the date of shipment, and which shall be determined to be defective by ATS upon their return to *the factory, freight prepaid, or at ATS's option to a* refund of the purchase price, and that ATS shall have no liability for damages of any kind, direct or indirect, arising from an installation and/or use of any material, and by accepting the material the buyer will assume all liability for any damages, direct or consequential, which may result from its use or misuse.

- **SERVICE GUARANTEE**

In addition ATS guarantees the satisfactory performance of ATS Packed Expansion Joints for a period of five years from date of shipment, provided, only, that the Expansion Joints are installed, operated and serviced in accordance with ATS prescribed standards. ATS will either replace or repair, without charge, FOB ATS factory any Packed Expansion Joint which fails to give five years' service under these prescribed conditions.

5 YEAR LEAK-FREE WARRANTY
FOR APPLICATIONS TO 300 PSIG - 800°F

In the event of leakage at the TP2 stuffing box, spare HPI packing plugs will be furnished at no charge for a period of 5 years from the date of shipment when the TP2 is factory packed with HPI injectable packing and equipped with BRONZALON or HC800 low friction guide inserts.

DESIGN AND MATERIAL OF CONSTRUCTION FOR PROVEN RELIABILITY

[ ] **SLIDING SLIP - PART 1:**

Machined from heavy wall ASTM A106 Gr B Seamless pipe to prevent slip collapse.

Size	Pipe Schedule
1-1/2" to 16"	Schedule 80
18" to 24"	Schedule 60

Heavier wall furnished for larger sizes and pressures above 600 psig.

The surface of each slip is machined and ground to obtain a 16 RMS finish before plating. ALL SLIPS are plated with "Coro-Cote Plus" a dual plating system consisting of 1 mil of industrial hard chrome over 1 mil of crack free hard chrome.

[ ] **SLIP END CONNECTION - PART 2:**

Weld End: Expansion joints can be furnished with ends beveled for welding to any pipe wall thickness. Unless otherwise specified, the standard weld end prep is for welding to Standard Wall Pipe.

Flanged End: A105 Forged Steel Raised Face Slip On Flanges of the specified pressure class.

[ ] **GUIDE INSERTS - PART 3:**

All ATS Expansion Joints have integral internal and external guide surfaces. **"Bronzalon" a low friction non-metallic insert can be furnished for applications to 500°F.** For applications above 500°F, metallic inserts of either Aluminum Bronze or Copper-Nickel can be furnished.

[ ] **STUFFING BOX - PART 4:**

Machined from heavy wall seamless mechanical tubing equivalent to ATSM A106 Gr B. **Wall thickness of stuffing box is sized to ensure distortion does not occur due to the internal pressure and the hydraulic forces associated with the injectable packing.**

[ ] **PACKING CYLINDER & PLUNGER - PARTS 5 & 6:**

ATS offers several packing cylinders, refer to Page 8 for a detailed description of the various types offered.

The ATS Type "A" packing cylinder is standard and is machined from 2" Diameter C 1018 carbon steel bar and has internal ACME Threads. The mating plunger, with external ACME Threads is machined from AISI C12L14 bar.

For corrosive and manhole applications, plungers machined from Aluminum Bronze, ATSM B150, are recommended.

[ ] **INJECTABLE PACKING - PART 7:**

All ATS Thermal Pak Expansion Joints are furnished with "HPI", an asbestos-free self-lubricating flake graphite injectable packing. The expansion joints are fully packed at the factory and additional packing plugs are provided for future system maintenance.

[ ] **RING PACKING - PART 8:**

Various types of ring packing are available for use with different service conditions. All types are asbestos-free. An all Graphite reinforced ring packing is used for Steam Service and all services over 300°F. A Fiberglass/Rubber combination is used for condensate and water service below 300°F.

[ ] **LIMIT STOP PINS - PART 9:**

High strength alloy limit stop pins are designed to prevent disengagement of the slip from the stuffing box in the event of an anchor failure. All stop pins are welded in place.

[ ] **BODY END CONNECTION - PART 10:**

Weld End: A standard wall concentric reducer meeting ASTM A-234, Gr WPB, or formed from A106 Gr B Standard Wall Pipe is furnished. Heavier wall reducers or eccentric reducers are available on application.

Flanged End: A modified Forged A105 Steel Flange attached to the traverse chamber via a butt weld.

[ ] **TRAVERSE CHAMBER - PART 11:**

Standard wall A106 Seamless Pipe used for standard sizes and pressure ratings. Heavier wall pipe used when required by specification or pressure rating.

[ ] **ANCHOR BASE - PART 12:**

Fabricated from A36 or equal steel plate with all bolt holes accessible from one side.

Single Slip Expansion Joint: Base is optional. Designed as MAIN ANCHOR BASE when furnished. When expansion joint is furnished with service connection, anchor base is standard.

Double Slip Expansion Joint: Base is standard, and is designed as INTERMEDIATE ANCHOR BASE. When expansion joint is furnished with service connection, anchor base is designed as main anchor.

[ ] **AVAILABLE OPTIONS:** See Pages 12 & 13

- Slip Adjustment Rods
- Insulation Blankets
- Service Connections
- Cycle and Force Testing

Phone: 716-681-1800 Fax: 716-681-0228 Toll Free: 800-443-9194
Internet Address: http://www.localnet.com/~ats

5-YEAR LEAK-FREE WARRANTY - Through extensive product testing, and a long-term history of successful field operation, the ATS Thermal Pak TP2 Expansion Joint has been demonstrated to be the most reliable expansion joint available. Due to this proven track record, ATS offers a 5-Year Leak-Free Warranty on all TP2 Expansion Joints furnished with **Bronzalon** guide inserts and **HPI** injectable packing (See Page 4 for warranty details).

CERTIFIED LEAK FREE FOR 25,000 CYCLES: - The ATS Thermal Pak expansion joint has been certified by an independent testing laboratory to be steam leak-free for 25,000 cycles while pressurized at 400 psig saturated steam. Certifications of test results furnished on specification or request.

ATS TP2 THERMAL PAK Expansion Joints Include These ATS Innovated Features

Performance:

[ ] BRONZALON-Guide Inserts:

The most significant development in providing expansion joint reliability has been the introduction, by ATS, of Bronzalon as a low friction guide insert. Bronzalon is a Bronze Filled Teflon - **NON-METALLIC** - material that is inserted into both the internal and external integral guide surfaces. This material provides two prime functions; 1) It provides a low friction - non-scoring guide surface for the slip, which eliminates all metal to metal contact, and 2) It provides the expansion joint with the ability to resist binding due to small amounts of misalignment since the material will deform slightly under high loads and relieve a binding condition. These two functions **CANNOT** be accomplished by the use of a metal insert such as Brass or Bronze. **This is one of the most distinguishing features of the ATS Thermal Pak Expansion Joint.** Use of Bronzalon is limited to applications of 500°F maximum.

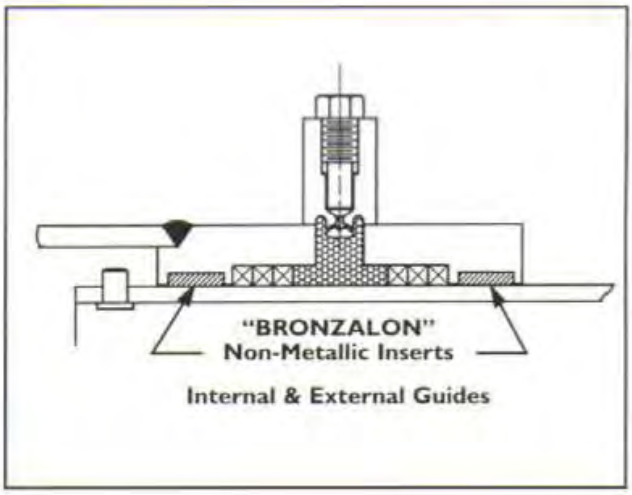

[ ] HPI - High Performance Injectable:

All ATS expansion joints are furnished with "HPI" Injectable Packing. ***HPI is a non-asbestos - self-lubricating - semi-plastic - Flake Graphite*** packing material that provides superior sealing for all types of service up to 1000°F. This packing was pioneered by ATS and is the only non-asbestos packing that has a long-term history of successful operation.

[ ] CORRO-COTE PLUS - Duplex Chrome:

Corro-Cote Plus is a duplex chrome plating system that consists of 1 mil minimum of Industrial Hard Chrome over 1 mil minimum of Crack Free Hard Chrome. **This system offers the best plating combination for achieving both a hard scratch resistant and corrosion resistant surface for the sliding portion of the slip.**

[ ] PACKING SAFETY - Packing Cylinders with Integral Shut-Off Valve:

The ATS Types "B" and "C" Packing Cylinders offer complete operator safety during the packing operation due to the integral stainless steel shut-off valve. During packing or clean out, the operator can easily close the valve to isolate the pressurized portion of the stuffing box from the packing cylinder chamber. With this accomplished, the plunger can be removed to allow either packing to be added, or the use of the ATS SAF-T-PACKER (See Page 8 and 9).

"BRONZALON", "HPI", "CORRO-COTE PLUS", and "SAF-T-PACKER" are registered Trademarks of ATS.

Reliability:

[ ] Never an Unscheduled Shutdown:

The TP2 Thermal Pak Expansion Joint has two distinct advantages over other types of axial expansion devices. 1) It is constructed from materials as strong or stronger than the pipeline, so there is never the chance of a catastrophic type failure that would force an unscheduled outage or jeopardize the safety of personnel in the area, and 2) In the unlikely event that a leak should occur, additional packing can be added to the expansion joint to stop the leak while the system is at full operating pressure. These features make the TP2 the first choice of companies whose business is selling thermal energy.

[ ] Proven Field Record of Reliability:

ATS Products have the most extensive history of reliable service of any expansion joint. Utility and Industrial users, whose business depends on keeping their system on line, depend on ATS for both reliable products and service.

Those responsible for the selection of mechanical pipe expansion devices should insist on the manufacturer's record of installations and not rely on claims based on short-term in house testing. ATS will gladly provide a User List on request, which includes contact names and telephone numbers of responsible persons to contact. **ATS strongly encourages potential users to verify their selection with current users before purchasing expansion joints.**

Service:

[ ] Customer Service:

The ATS commitment is to provide engineered products and support service to their customers. It is the goal of ATS to ensure that its products are the highest quality possible, and that they are the proper product for the application. Whenever possible, ATS will review each application to ensure the installation is correct. ATS Engineers have extensive experience with piping systems and the application of expansion devices. When required, detailed computer assisted analysis is performed to determine and verify compliance of the design with the applicable code. This service is generally performed at no cost.

[ ] Delivery:

All facets of the manufacturing process are performed in the ATS Facility (except Chrome Plating) by ATS employees, thereby assuring complete control over the delivery and the quality of all ATS Products. ATS maintains an extensive inventory of completed components, which can be assembled into finished expansion joints with a short manufacturing cycle. Shipment of standard expansion joints up to 24" diameter can be made in 1 - 2 days on an emergency basis when required.

QUALITY CONTROL

ATS maintains a modern manufacturing facility in Lancaster, NY. All facets of the manufacturing process, including all machining, welding, and assembly, are performed in the ATS Shop, thereby assuring the highest possible quality. Some of the modern "state-of-the-art" equipment at ATS includes: three (3) CNC turning centers, a CNC Vertical Turning Lathe which can accommodate parts up to 59" in diameter, (shown right) and a cylindrical OD grinder for grinding slips up to 42" in diameter.

Modern welding equipment allows for welding by SMAW (stick), GMAW (mig), SAW (submerged arc), plus a burning table with optical tracer. All ATS weld procedures and welders have been certified to ASME Section IX. Pressure containing components for both the TP2 Expansion Joint and Thermal Pak Flexible Ball Joints are designed to meet the requirements of the ASME Boiler and Pressure Vessel Code and ANSI B31.1 and B31.3. ATS products are registered in Canada (CRN), as well as the Flexible Ball Joints being listed by UL. Complete Quality Assurance Procedures and Documentation are in place, and on specification ATS can perform nondestructive testing - 100% Radiograph of butt welds and magnetic particle inspection of fillet welds.

ATS maintains an ongoing testing program to ensure its products are the highest possible quality. Force and cycle testing of both the TP2 Expansion Joints and Flexible Ball Joints are performed at random on production units to verify packing density, friction/flex torque values, and free movement.

ATS ENGINEERED PACKING CYLINDERS -
Solution to Safe and Effective Packing Injection

ATS offers three (3) packing cylinder designs for use with the TP2 Thermal Pak Expansion Joint. Carbon Steel is the standard material of construction for both the packing cylinder and plunger for applications up to 800°F. For corrosive applications, i.e., salt water and manholes, other materials such as stainless steel packing cylinders and aluminum bronze plungers are available.

Key Safety Features of all ATS Packing Cylinders:

- Welded directly to Stuffing Box
- 2" Diameter to prevent splitting due to hydraulic pressure of packing operation.
- Heavy Duty 1" - 5 Acme Threads.
- Discharge tip incorporates "Check Valve Effect" design.

TYPE	MAXIMUM PRESSURE	APPLICABLE EJ SIZE
"A"	300 psig	1½" & larger
"B"	850 psig	1½" & larger
"C"	1000 psig	6" & larger

[ ] TYPE "A" PACKING CYLINDER:

The ATS Type "A" Packing Cylinder has for many years provided economic and safe provisions for packing injection under full line pressure. Unless otherwise specified all ATS Thermal Pak Expansion Joints for service up to 300 psig will be furnished with the ATS Type "A" Packing Cylinder. The design of the discharge tip of the Type "A", and all other Types, is such that a "check valve effect" is created to resist blow back of the packing during the injection process. All ATS Packing Cylinders are machined from C1018 carbon steel and have heavy duty internal Acme Threads. The mating plunger has matching Acme Threads, and is machined from C12L14, a slightly softer material that prevents damage to the internal threads of the packing cylinder.

[ ] TYPE "B" PACKING CYLINDER:

The ATS Type "B" Packing Cylinder has an integral Stainless Steel Safety Valve which provides for positive shut off during the packing injection process. It also contains the same discharge tip design, internal Acme Threads, and is machined from the same materials as the Type "A" Packing Cylinder. The Type "B" Packing Cylinder is provided on all TP2 Thermal Pak Expansion Joints designed for service over 300 psig. When using the Type "B" Packing Cylinder, the valve is rotated to the closed position, as indicated by the indicator pin, which then provides a positive shut off from the flowing media. The packing plunger can then be removed to allow a packing plug to be inserted into the packing cylinder without operator concern over possible blow back. **While this type packing cylinder is required for operating pressures over 300 psig, it will provide the maintenance personnel with a feeling of safety at all service conditions.**

[ ] TYPE "C" PACKING CYLINDER:

The ATS Type "C" Packing Cylinder is a heavy duty packing cylinder, designed for use in high pressure/temperature applications which require maximum reliability. This design is furnished for all applications over 850 psig, and for other applications on specification. The Type "C" Packing Cylinder consists of a **retainer** welded to the expansion joint which contains the integral **stainless steel safety valve.** During normal operation, a **cap plug** is threaded into the retainer. When packing is to be injected, the cap plug is removed and a **packing injector** is threaded into the retainer. Packing is accomplished using the same procedure outlined above. Upon completion of the packing operation, the packing injector should be removed and the cap plug installed.

HIGH PRESSURE + HIGH TEMPERATURE + TP2 + SAF-T-PACKER = *Safe and Effective Packing*

TYPE "GB" SAF-T-PACKER

Patent Number:
4,711,013

TYPE "GC" SAF-T-PACKER

SAF-T-PACKERS are shown fully engaged with the Type "B" and Type "C" Packing Cylinders

The Only Safe and Effective Method - to clean out the packing cylinder:

Due to the integral safety valve of the ATS Types "B" and "C" Packing Cylinders, a long column of impacted packing remains in the packing cylinder above the discharge tip. This column of packing adds to the effectiveness of the discharge tip, however, it also increases the amount of torque required to inject packing, especially the first plug.

To reduce the effort required to inject packing, this column of packing should be loosened and cleaned out. The only **safe and effective** method to accomplish this is with the use of an **ATS SAF-T-PACKER.** Use of the **SAF-T-PACKER** greatly reduces the time and effort required to inject packing into the ATS Types "B" and "C" Packing Cylinders, while providing complete operator safety.

Use of the SAF-T-PACKER - both Safe and Simple

The SAF-T-PACKER is normally used when injecting the first plug of packing into either a Type "B" or Type "C" Packing Cylinder. With the safety valve on the packing cylinder in the closed position, the packing plunger is disengaged from the packing cylinder. The SAF-T-PACKER is then threaded into the packing cylinder. Note: The drill bit on the SAF-T-PACKER must be fully retracted into the housing. The safety valve on the packing cylinder is then opened, and the handle on the SAF-T-PACKER rotated clockwise until the bit is fully engaged. The handle is then rotated counterclockwise to completely disengage the bit. Before the SAF-T-PACKER is removed from the packing cylinder, the safety valve must be closed. Complete instructions for use of all styles of ATS SAF-T-PACKER's are furnished with each SAF-T-PACKER shipped.

The ATS Type "A" Packing Cylinders do not have the integral safety valve and ATS therefore does not recommend the use of a SAF-T-PACKER with a Type "A" Packing Cylinder when the system is pressurized.

SAFETY PRECAUTION: The injection of packing into a fully pressurized expansion joint is a safe operation when it is accomplished using the procedures and instructions furnished with the expansion joint. Personnel doing the packing injection should read and understand the instructions before starting packing injection. ATS offers training seminars for maintenance personnel when requested.

THERMAL PAK TYPE "TP2" SINGLE EXPANSION JOINTS

MEETS ASTM F1007

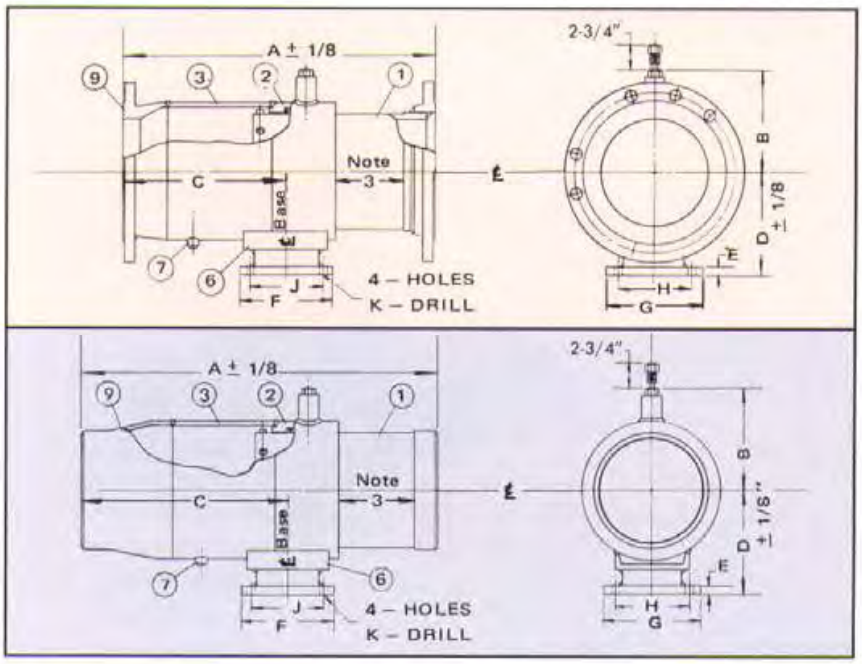

Packing Cylinder Orientation

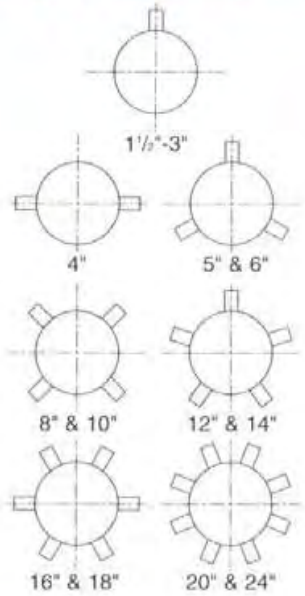

DIMENSIONS – INCHES

EXP. JOINT SIZE	A (NOTE 3) NOMINAL TRAVERSE 150 LB. FLG. 4"	150 LB. FLG. 8"	150 LB. FLG. 12"	300 LB. FLG. 4"	300 LB. FLG. 8"	300 LB. FLG. 12"	150 & 300 LB. WELD 4"	150 & 300 LB. WELD 8"	150 & 300 LB. WELD 12"	B	C 150 LB. FLANGED 4"	150 LB. FLANGED 8"	150 LB. FLANGED 12"	300 LB. FLANGED 4"	300 LB. FLANGED 8"	300 LB. FLANGED 12"	150 & 300 LB. WELD 4"	150 & 300 LB. WELD 8"	150 & 300 LB. WELD 12"	EXP. JOINT SIZE
1½	23¼	31¼	39¼	23⅜	31⅜	39⅜	22⅜	30⅜	38⅜	5¼	12¾	16¾	20¾	12⅞	16⅞	20⅞	12⅜	16⅜	20⅜	1½
2	23¼	31¼	39¼	23⅜	31⅜	39⅜	22⅜	30⅜	38⅜	5⅝	12¾	16¾	20¾	12⅞	16⅞	20⅞	12⅜	16⅜	20⅜	2
2½	20⅝	28⅝	36⅝	21⅛	29⅛	37⅛	23⅛	31⅛	39⅛	5⅞	10⅛	14⅛	18⅛	10⅝	14⅝	18⅝	13⅛	17⅛	21⅛	2½
3	21¼	29¼	37¼	22	30	38	23¾	31¾	39¾	6⅛	10¼	14¼	18¼	11	15	19	13¼	17¼	21¼	3
4	21½	29½	37½	22⅛	30⅛	38⅛	25	33	41	6⅞	10½	14½	18½	11⅜	15⅜	19⅜	14½	18½	22½	4
5	22¼	30¼	38¼	23⅛	31⅛	39⅛	26	34	42	7¼	11⅛	15⅛	19⅛	12	16	20	15½	19½	23½	5
6	27⅛	35½	43½	22¾	30¾	38¾	26½	34½	42½	8⅛	16⅝	20⅝	24⅝	11⅝	15⅝	19⅝	16	20	24	6
8	28¾	36¾	44¾	23	31	39	27½	35½	43½	9⅛	16¾	20¾	24¾	11	15	19	16¼	20¼	24¼	8
10	31⅞	39⅞	47⅞	25¼	33¼	41¼	30⅞	38⅞	46⅞	10⅛	18⅝	22⅝	26⅝	12½	16½	20½	18⅛	22⅛	26⅛	10
12	25½	33½	41½	26¼	34¼	42¼	30⅝	38⅝	46⅝	11	11¾	15¾	19¾	12½	16½	20½	17⅝	21⅝	25⅝	12
14	25⅞	33⅞	41⅞	27⅞	35⅞	43⅞	31⅜	39⅜	47⅜	11¾	12⅞	16⅞	20⅞	13⅜	17⅜	21⅜	18⅜	22⅜	26⅜	14
16	26¾	34¾	42¾	27⅞	35⅞	43⅞	31⅝	39⅝	47⅝	12¾	12½	16½	20½	13⅜	17⅜	21⅜	18⅛	22⅛	26⅛	16
18	28½	36½	44½	29¾	37¾	45¾	33⅜	41⅜	49⅜	13¾	13⅜	17⅜	21⅜	14⅝	18⅝	22⅝	19⅛	23⅛	27⅛	18
20	30⅛	36⅜	44⅜	31	37¼	45¼	34⅜	40⅝	48⅝	14¾	15	17¼	21¼	15⅞	18¼	22⅛	20⅛	22⅛	26⅜	20
24	32	37½	45½	33	38½	46½	35¾	41¼	49¼	16¼	15⅛	16⅝	20⅝	16⅛	17⅝	21⅜	20	21½	25½	24

EXP. JOINT SIZE	D	ANCHOR BASE DIMENSIONS (*) FLANGED AND WELD ENDS 150 LB. MWP E	150 LB. MWP F	150 LB. MWP G	150 LB. MWP H	150 LB. MWP J	150 LB. MWP K	300 LB. MWP E	300 LB. MWP F	300 LB. MWP G	300 LB. MWP H	300 LB. MWP J	300 LB. MWP K	EXP. JOINT SIZE
1½	4	½	5½	5½	4	4	⅝	½	5½	5½	4	4	⅝	1½
2	4¼	½	5½	5½	4	4	⅝	½	5½	5½	4	4	⅝	2
2½	4⅝	½	5½	5½	4	4	⅝	½	5½	5½	4	4	⅝	2½
3	5	½	6	6	4½	4½	⅝	½	6	6	4½	4½	⅝	3
4	5¾	½	7	7	4¾	4¾	¾	½	7	7	4¾	4¾	¾	4
5	6½	⅝	8	8	5¾	5¾	⅞	⅝	8	8	5¾	5¾	⅞	5
6	7¼	⅝	8	8	5¾	5¾	⅞	⅝	8	8	5¾	5¾	⅞	6
8	8⅝	¾	10	10	7½	7½	1	⅝	10	10	7½	7½	1	8
10	10½	1	10½	12	9½	8	1⅛	1	10½	12	9½	8	1⅛	10
12	11¼	1	12	14½	11½	8½	1⅜	1	12	14½	11½	8½	1⅜	12
14	12¼	⅞	12	15	12	9	1¼	1	14	16	12	10½	1⅜	14
16	13½	⅞	12½	15¾	12½	9	1⅜	1¼	14	16	12½	10½	1½	16
18	15	1	14	16	12½	10½	1½	1¼	15	17	13	11	1¾	18
20	16¼	1	15	17	13	10½	1½	1¼	18	18	13½	13½	1⅞	20
24	18¾	1¼	18½	18½	14	14	1⅞	1½	19	19	14	14	2¼	24

MODEL NUMBERS			
PRESSURE	ENDS	BASE	MODEL NUMBER
150 LB.	FLG'D	NO	TP2F-121
		YES	TP2F-122
300 LB.	FLG'D	NO	TP2F-131
		YES	TP2F-132
150 LB.	WELD	NO	TP2W-121
		YES	TP2W-122
300 LB.	WELD	NO	TP2W-131
		YES	TP2W-132

(*) Single Slip Expansion Joints furnished with anchor base **only if specified.**

THERMAL PAK TYPE "TP2" DOUBLE EXPANSION JOINTS

MEETS ASTM F1007

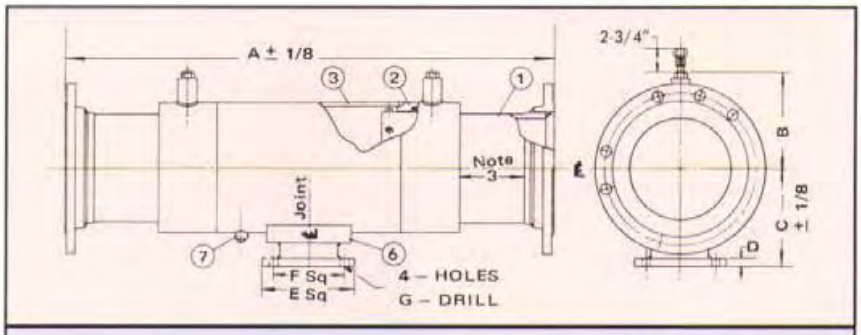

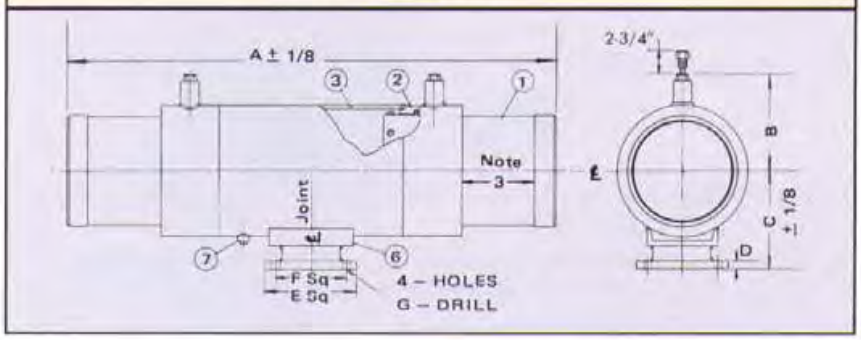

Packing Cylinder Orientation

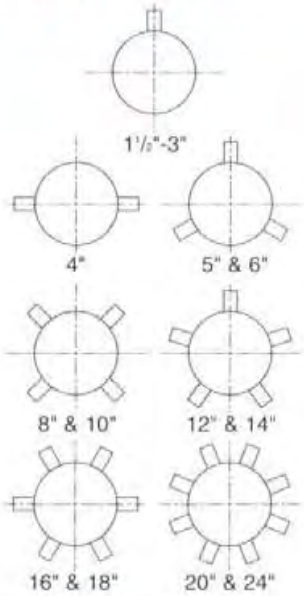

EXP. JOINT SIZE	DIMENSIONS - INCHES																		EXP. JOINT SIZE
	A (NOTE 3) NOMINAL TRAVERSE EACH SLIP												B	BASE DIMENSIONS ALL PRESSURES					
	150 LB. FLG.			300 LB. FLG.			150 LB. WELD			300 LB. WELD				C	D	E	F	G	
	4"	8"	12"	4"	8"	12"	4"	8"	12"	4"	8"	12"							
1½	38¾	54¾	70¾	38¾	54¾	70¾	37¾	53¾	69¾	37¾	53¾	69¾	5¼	4	½	5½	4	⅝	1½
2	38¾	54¾	70¾	38¾	54¾	70¾	37¾	53¾	69¾	37¾	53¾	69¾	5⅝	4¼	½	5½	4	⅝	2
2½	39¼	55¼	71¼	39¼	55¼	71¼	38¼	54¼	70¼	38¼	54¼	70¼	5⅞	4⅜	½	5½	4	⅝	2½
3	40½	56½	72½	40½	56½	72½	39½	55½	71½	39½	55½	71½	6⅛	5	½	6	4½	⅝	3
4	41	57	73	41	57	73	40	56	72	40	56	72	6⅝	5¾	½	7	4¾	¾	4
5	46¼	58¼	74¼	46¼	58¼	74¼	45	57	73	45	57	73	7⅛	6⅛	⅝	8	5¾	⅞	5
6	46¼	58¼	74¼	46¼	58¼	74¼	45	57	73	45	57	73	8⅛	7¼	⅝	8	5¾	⅞	6
8	46½	58½	74½	46½	58½	74½	45	57	73	45	57	73	9⅛	8¾	¾	10	7½	1	8
10	49¾	61¾	77¾	49¾	61¾	77¾	48¼	60¼	76¼	48¼	60¼	76¼	10⅛	10½	¾	10	7½	1⅛	10
12	50¾	62¾	78¾	50¾	62¾	78¾	49¼	61¼	77¼	49¼	61¼	77¼	11	11¼	⅞	12	9	1¼	12
14	52¼	64¼	80¼	52¼	64¼	80¼	50¾	62¾	78¾	50¾	62¾	78¾	11¾	12¼	⅞	12	9	1¼	14
16	52¾	64¾	80¾	52¾	64¾	80¾	51¼	63¼	79¼	51¼	63¼	79¼	12¾	13½	⅞	14	10½	1⅜	16
18	54½	66½	82½	54½	66½	82½	52¾	64¾	80¾	52¾	64¾	80¾	13¾	15	⅞	14	10½	1⅜	18
20	60½	68½	84½	60½	68½	84½	58¾	66¾	82¾	58¾	66¾	82¾	14¾	16¼	1	16	12½	1½	20
24	61¾	69¾	85¾	61¾	69¾	85¾	59½	67½	83½	59½	67½	83½	16¾	18¾	1	18	13½	1⅞	24

GENERAL NOTES:

1. **Protection: One shop coat of Red Oxide Primer paint is applied to all unfinished exterior surfaces.**
2. **Sliding surface of Slip is a "Dual" Hard Chrome plate - minimum 2 mil thick.**
3. The overall dimension "A" is the shipped length of the Expansion Joint for hot service which includes a 1" factory precompression of the slip. Allowable movement of each slip is 1" in extension and compression equal to the nominal traverse. Exposed chrome length is equal to the nominal traverse. For cold service additional precompression is required.
4. **Weld Ends machined and beveled to match Std. wall pipe unless otherwise specified.**
5. Drain connection (3000# THD'D. Cplg.) furnished only if specified.

MODEL NUMBERS		
PRESSURE	ENDS	MODEL NUMBER
150 LB.	FLG'D	TP2F-222
300 LB.	FLG'D	TP2F-232
150 LB.	WELD	TP2W-222
300 LB.	WELD	TP2W-232

SERVICE CONNECTION:

Single and Double Expansion Joints with Anchor base are available with a service (branch) connection. Where a service connection is required, the last digit of the Model No. becomes a **4**.

Dimension "A" of the Single and Double expansion joints is increased to allow full flow area at service connection when slip is in fully closed position.

CONSULT FACTORY FOR DIMENSIONAL DATA.

Phone: 716-681-1800 Fax: 716-681-0228 Toll Free: 800-443-9194
Internet Address: http://www.localnet.com/~ats

[ ] Slip Adjustment Rods: Used in Replacement Applications

When installing an expansion joint in a line that will not be at ambient temperature during the installation, it may be necessary to pre-compress the slip an additional amount over the standard factory pre-compression to ensure there is sufficient slip extension when the pipeline is allowed to reach ambient conditions at some later date. During the installation process, the slip may have to be moved in the field to accommodate the opening in the pipeline. Due to the large force required to move the slip, it is often difficult to field improvise a method to efficiently move the slip. ATS can provide the expansion joint with lugs welded to both the expansion joint body and slip (refer to photo on Page 3). Use of the lugs in conjunction with the threaded rods provided will allow the slip to be conveniently moved in the field.

This option is normally only provided for expansion joints furnished with ends beveled for welding. When the expansion joint is furnished with flanged ends, the slip can be moved in the field by use of threaded rods and nuts placed through the bolt holes in the flanges on both ends of the expansion joint.

CAUTION:

1. The use of two adjustment rods located 180° apart is always required, and adjustment must be made simultaneously to both rods to prevent the slip from becoming cocked in the stuffing box and binding.
2. Once the installation of the expansion joint has been completed, **the rods must be removed.** If insulation blankets have been provided, or field insulation is to be applied, the lugs should be carefully burned off at both the body and slip locations.

[ ] Insulation Blankets: Cost-Effective Energy Savings

ATS Removable - Reusable Insulation Blankets provide a cost-effective method for insulating the expansion joint. Designs are available for various service conditions:

LT450 SS	450°F, for non-corrosive environment, suitable for outdoor use.
MT550 NN	550°F, best for damp installations with salt exposure, i.e., manholes, not suitable for exposure to UV Rays.
MT800 SGM	800°F, for non-corrosive environment, suitable for outdoor use.

ATS supplied insulation blankets can be furnished in various configurations dependent upon the users requirements. Typical configurations include:

Two Piece: One piece covers the body and a separate blanket(s) is furnished for the slip(s).
Slip Only: Body covered with same insulation as mating pipeline, blanket(s) furnished for slip(s) only.

All blankets are weather resistant and have a protective cloth cover on both the inner and outer surface. In addition, the inner surface has an Inconel wire mesh screen to further protect the blanket surface. All blankets are custom made to fit the ATS Expansion Joint and have access to the packing cylinders to allow packing injection to be accomplished without requiring the body blanket to be removed. Having the insulation blanket furnished by the expansion joint manufacturer ensures a proper fit.

[ ] Service Connections:

ATS expansion joints can be supplied with service connections up to the full line size. Whenever a service connection is provided, the expansion joint will always be supplied with an anchor base designed as a main anchor to take the loads and moments associated with the service connection. The service connection is incorporated onto the body by use of a Forged Steel Weld-O-Let. The service connection can be furnished with ends machined and beveled to any Pipe Schedule, or with a Forged Steel Flange. Note: The overall length of expansion joints furnished with service connections will be greater than that listed as Dimension "A" on Pages 10 and 11.

[ ] Aluminum Bronze Plungers:

In applications where the expansion joints will be in a wet, damp, or corrosive environment, consideration should be given to the use of Aluminum Bronze Plungers in lieu of the standard carbon steel plungers.

[ ] Cycle and Force Test:

The cycle and force test is a quality enhancement test that can be performed to verify both the free movement of the slip and the force required to move the slip. **When proper techniques are employed for factory injection of the packing, the force required to move the slip of a packed slip joint can be used to correlate the density of the packing.** Through experience and testing, ATS has been able to establish the minimum packing density required to seal expansion joints at various service conditions.

The cycle and force test performed by ATS requires that the slip be cycled through its full rated traverse three (3) times, and that the force required to move the slip be measured and recorded. This test virtually eliminates leakage of the expansion joint at startup.

[ ] Dirt Leg:

ATS can supply TP2 Expansion Joints with dirt legs in sizes up to full line size. A standard dirt leg consists of a heavy wall pipe section, heavy wall end cap, two (2) side mounted and one (1) bottom mounted threaded connections. The dirt leg is attached to the expansion joint body using a Forged Steel Weld-O-Let. When dirt legs are required in the system, it is normally cost-effective to have ATS include a dirt leg on the expansion joint body.

[ ] NPT Threaded Ends:

ATS can supply the TP2 Expansion Joint with NPT Threaded Ends in Sizes 1½" to 3". When threaded ends are specified, the overall length of the expansion joint will be longer than the dimensions shown for a weld end expansion joint.

[ ] Drain Connections:

ATS does not furnish drain connections as standard with the TP2 Expansion Joint. Drains will be furnished when specified. There is no additional charge for furnishing a drain connection.

SPECIFICATION FOR HIGH PERFORMANCE EXPANSION JOINTS

The following specification should be used as a model to ensure an expansion joint that will provide years of reliable service is specified. The user should verify the proven performance, quality and reliability of their selection, as well as the service provided by the manufacturer, prior to making a selection. ATS maintains a current users list, and encourages potential users of the TP2 to contact the individuals on the list.

NOTE: Optional requirements are shown in red. Items which appear in *highlighted italics* are to be included as appropriate for the intended service. This specification should be used for expansion joints rated at 300 psig - 500°F or below. Consult ATS when writing a specification for higher pressure/temperature applications. Contact ATS to obtain a copy of this specification on computer disk.

---

1. GENERAL:
   The expansion joint shall be the packed slip tube type which allows for additional packing to be injected while the expansion joint is under full line pressure. The design is based on the ADVANCED THERMAL SYSTEMS, INC. "TP2 THERMAL PAK EXPANSION JOINT."

2. DESIGN:
   - 2.1 The expansion joint shall be designed for *(150/300)* psig - 500°F *(steam/condensate/other)* service.
   - 2.2 Expansion joint shall be *(single/double)* slip design, and furnished *(with/without)* an anchor base. The ends of the slip and body shall be *(machined for welding to {standard wall/extra heavy wall} pipe/furnished with {150 lb./300 lb.} raised face forged steel flanges).*
   - 2.3 The stuffing box shall have integral internal and external guide surfaces. **The guide surfaces shall have low friction, non-metallic inserts.**
   - 2.4 The expansion joint shall have 2" minimum diameter packing cylinders welded in place to allow packing to be injected under full line pressure. The packing cylinder tip shall incorporate a "check valve effect" tip design to prevent the blow back of packing while adding packing to the expansion joint at full line pressure. The packing cylinders shall be furnished with an integral stainless steel shut-off valve. A tool designed to allow safe removal of the impacted packing shall be furnished whenever packing cylinders with integral shut-off valves are furnished.
   - 2.5 The packing friction force of the expansion joint shall not exceed 1,000 lbs. per inch of expansion joint nominal diameter (i.e., 6,000 lbs. for a 6" size). The packing friction force is to be verified by performing a cycle test consisting of moving the slip through its full rated traverse three (3) times. The force shall be measured and recorded.
   - 2.6 All circumferential body welds shall be of the butt weld type.

3. MATERIALS:
   - 3.1 The stuffing box and body shall be machined from A106 or equivalent heavy wall mechanical tubing, or seamless pipe.
   - 3.2 The slip shall be machined from A106 seamless pipe, Schedule 80 for sizes 1½" to 16", Schedule 60 for sizes 18" to 24". All slips are to be machined and ground to achieve a 16 RMS finish before plating. Plating shall consist of 1 mil minimum of industrial hard chrome over 1 mil minimum of crack free hard chrome.
   - 3.3 Expansion joint shall be factory packed for the intended service with Flake Graphite Injectable Packing. The stuffing box packing area in contact with the slip shall be at least 15 times the nominal diameter of the expansion joint. Spare packing plugs are to be furnished with each expansion joint order.

4. GUIDING:
   - 4.1 Factory produced primary and intermediate guides shall be the *(split housing spider/low friction graphite)* type.
   - 4.2 Primary and intermediate guide spacing shall be in accordance with the expansion joint manufacturer's recommendations.

5. INSULATION BLANKETS:
   - 5.1 A two (2) piece removable reusable insulation blanket is to be provided with the expansion joint to cover the expansion joint body and slip, and is to incorporate access to the packing cylinders without removal of the body portion of the blanket.
   - 5.2 The insulation blanket is to be ***(xx)*** inches thick, and designed to mate with ***(xx)*** inches thick insulation on the adjacent pipe.
   - 5.3 The inner and outer covers are to be made from Silicone Impregnated Nomex Cloth. An Inconel wire mesh liner is to be attached to the inner cover.

The bitterness of poor quality lingers long after the sweetness of a cheap price is forgotten.

HOW TO ORDER THERMAL PAK "TP2" EXPANSION JOINTS

To insure correct and efficient production of Expansion Joint Orders, use full catalog number designation as described in example below

CATALOG NUMBER

10" TP2 W-1 2 1-8-350H-BRONZALON-A

1 2 3 4 5 6 7 8 9 10

FIELD No.

1. Pipe size.
2. Expansion Joint Design:
   TP2 = Thermal Pak.
3. W= Weld Ends.
   F = Flanged Ends.
   S = Screwed Ends (3" maximum size).
   Single Joints only
   F x W = Flange at body end, weld at slip end.
   W x F = Weld at body end, flange at slip end.
4. 1 = Single slip Expansion Joint.
   2 = Double slip Expansion Joint.
5. 2 = 150 lb. pressure class. 6 = 600 lb. pressure class.
   3 = 300 lb. pressure class. 8 = 800 lb. pressure class.
   4 = 400 lb. pressure class. 9 = 900 lb. pressure class.
6. 1 = Without anchor base.
   2 = With anchor base (double joints are furnished with an intermediate anchor base).
   4 = With service connection. Size and type (weld, flanged, threaded) of service connection and its location must be specified. If service connection is at side of Single Expansion Joint, specify which side when facing the slip. Anchor base required for all Expansion Joints with service connections.
   5 = With Drip/Dirt leg. Specify size and max. length.
   6 = With service connection and Drip/Dirt leg.
7. Nominal traverse per slip. Traverse furnished in 4" increments, i.e., 4", 8", 12", 16". Consult Factory where traverse exceeds 16".
8. Packing Designation:
   *200H
   *300H
   *350H
   400H
   *Std. unless specified otherwise
   Refer to Table 1

TABLE I
PACKING CODE - Field 8

PACKING CODE (Field 8)	BRAIDED RING PACKING	INJECTABLE PACKING	SERVICE	MAX. TEMP. °F	ASBESTOS FREE
200H	Fiberglass/Rubber/Graphite	"HPI" Flake GRAPHITE	Cond.	300	YES
300H	Fiberglass/Rubber		CW/Air	300	
350H	Reinforced Graphite		Steam	600	
400H	Reinforced Graphite		Steam	800	

HPI® is a registered trademark of Advanced Thermal Systems

9. Optional low friction inserts for internal and external guides. Specify Bronzalon for temperature to 500°F or HC800 for higher temperatures to 800°F. Omit if not required.
10. Type of Packing Cylinder as shown below:

TYPES OF PACKING CYLINDERS

TYPE	MAXIMUM PRESSURE	AVAILABLE FOR E.J. SIZES
A	300 PSIG	1½" & larger
B	850 PSIG	1½" & larger
C	1000 PSIG	6" & larger

OTHER DATA

1. If ends are to be beveled for welding to other than standard wall pipe, specify wall thickness or pipe schedule of weld ends.
2. Always advise design service conditions, i.e., fluid, pressure and temperature, for nameplate data.
3. If other than standard 1" factory slip pre-compression is required, specify requirements.
4. All Expansion Joints are normally furnished without a drain connection unless otherwise specified. Specify DRAIN if required.
5. Bases for single joints are designed as an axial load main anchor base unless otherwise specified and are drilled accordingly. If base is to be used as a sliding support base, so state so base plate will not be drilled to avoid field error of anchoring the base.
6. Specify any unusual conditions or length requirements to fit existing conditions, etc.
7. Aluminum Bronze Plungers (ASTM B150), where required, must be specified separately.
8. Slip adjustment rods, where required, must be specified separately. Recommended for weld end joints only.
9. Insulation blankets, where required, must be specified separately. Specify thickness of insulation on mating pipe and maximum operating temperature.

ATS Engineers are available to help provide a solution to your piping problem. Mail or FAX your piping configuration for a computer generated flexibility analysis, recommendations and a proposal.

[ ] THERMALLY INDUCED CHANGES OF PIPELINES:

Pipelines will always change in length as the temperature of the pipeline changes. This change must be accommodated by some method, either by natural flexibility of the pipeline or by use of an expansion device. The TP2 Expansion Joint is the ideal selection when long straight runs of pipe are involved.

Table 2 is used to determine the total change in length of the pipe run based upon the maximum and minimum temperatures of the system. The net change in length of the pipe run per 100 ft. of piping is the algebraic difference between the expansion constant at the highest temperature and the expansion constant at the lowest temperature. This difference is then multiplied by the total length of the pipe run divided by 100. NOTE: the minimum temperature may not be the installation temperature.

EXAMPLE: Determine the total change in length of a 250-ft. long pipe run that is designed for 250 psig saturated steam (406°F) and is being installed outside where the ambient temperature may reach -20°F.

$$3.29 - (-0.15) \times \frac{250}{100} = 8.6 \text{ in}$$

[ ] TRAVERSE SELECTION AND PRE-COMPRESSION:

Traverse is normally supplied in 4" increments, with 4", 8" and 12" nominal traverse considered standard. Once the total growth of the pipe run is determined, a safety factor of 10% should be added (See Table 2 footnotes), and a standard expansion joint traverse larger than the total growth should be selected. Assuming a single slip expansion joint is to be used for the example above, a 12" traverse expansion joint should be selected.

All ATS expansion joints for hot service are shipped with the slips pre-compressed 1", and are capable of moving the nominal traverse in compression and 1" in extension. For cold service, the slips are pre-compressed the nominal traverse, and are capable of moving the nominal traverse in extension and 1" in compression. Consult the factory whenever the installation temperature of the expansion joint is going to be abnormal, i.e., installing the expansion joint in a hot line, or installing the expansion joint on an exceptionally hot day in a normally cold location.

[ ] EXPANSION JOINT PACKING FRICTION FORCE:

The packing friction force of a slip type expansion joint is the force required to move the slip due to the injectable packing acting on the slip inside the stuffing box. ATS has determined from testing that for expansion joints properly packed for service up to 300 psig, this force is equal to approximately 1,000 lbs. per inch of expansion joint nominal diameter, i.e., a 6" expansion joint will require 6,000 lbs. of force to move the slip. Packing friction forces are tabulated in Table 3.
NOTE: When an expansion joint is to be packed for service above 300 psig, consult the factory for the appropriate packing friction force.

[ ] PRESSURE THRUST:

The pressure thrust associated with a packed slip type expansion joint can be calculated by multiplying the design pressure of the system by the thrust area of the expansion joint. The thrust areas for the ATS expansion joints are listed in Table 3. The pressure thrust is a very important component in the calculation of anchor loading and must be properly calculated and accounted for.

TABLE 2
THERMAL EXPANSION OF STEEL PIPE —INCHES PER 100FT.

Saturated Steam Vacuum in HG below 212°F., Pressure psig above 212°F.	Temperature Degrees Fahrenheit	Carbon & Carbon Molybdenum Steel
	—40	—0.29
	—20	—0.15
	0	0
	20	0.15
	32	0.23
	40	0.30
29.39	60	0.45
28.89	80	0.58
27.99	100	0.75
26.48	120	0.91
24.04	140	1.06
20.27	160	1.20
14.63	180	1.36
6.45	200	1.52
0	212	1.61
2.5	220	1.68
5.0	227	1.74
10.3	240	1.84
20.7	260	2.02
25.0	267	2.08
34.5	280	2.18
50.0	298	2.33
52.3	300	2.35
74.9	320	2.53
103.3	340	2.70
125.0	353	2.82
138.3	360	2.88
150.0	366	2.93
180.9	380	3.06
200.0	388	3.13
232.4	400	3.23
250.0	406	3.29
293.7	420	3.42
300.0	422	3.44
366.1	440	3.60
400.0	448	3.67
451.3	460	3.78
500.0	470	3.87
550.3	480	3.96
600.0	489	4.04
664.3	500	4.15
795.3	520	4.34
945.3	540	4.53
1115	560	4.73
1308	580	4.93
1525	600	5.13
1768	620	5.33
2041	640	5.53
2346	660	5.75
2705	680	5.95
3080	700	6.16
	720	6.36
	740	6.57
	760	6.79
	780	7.00
	800	7.23
	820	7.45
	840	7.66
	860	7.97
	880	8.10
	900	8.34

Add a minimum of 10% to calculated expansion for selection of the expansion joint nominal traverse for (1) discrepancies in minimum or installation temperatures, (2) jobsite necessity to relocate anchor points, and (3) temperature surges.

[ ] ANCHORS:

All piping systems must be divided into individual expanding segments by means of anchors which are attached to the piping and in turn to a support structure. Machinery and equipment, such as turbines and pumps are also considered anchors, since their bases are fixed and resist all forces and moments imposed upon them.

The installation of slip type expansion joints, like any other axial motion type expansion joint, introduces forces which must be resisted by the anchors. Anchors can be categorized as either main or intermediate type, depending upon the forces they must withstand.

The **main anchors** must resist forces which involve the internal pressure of the system as well as the frictional forces associated with the pipe supports and expansion joint packing friction. **Intermediate anchors** usually involve only the frictional forces of the system.

[ ] ANCHOR FORCES:

Anchor forces are calculated by adding the three components listed below, refer to Table 3:

- Pressure Thrust (Fp): (ATS Primer on Pressure Thrust furnished upon request).
  $Fp = p \times a$
- Expansion Joint Packing Friction (Fc):
  $Fc = K \times D$
- Pipe Support Friction (Fs):
  Total Pipe Support Friction = $Fs \times (L / 100)$

In addition to the static forces listed above, there are also dynamic forces that sometimes need to be considered. For steam service the dynamic forces are quite low and can be accounted for by adding a 5% minimum load factor to the total calculated force. For high density fluids, the dynamic forces can be quite significant due to the effect of the moving fluid impinging upon an elbow and can result in a substantial force on the elbow anchor. The magnitude of this force can be calculated by using the following formula: (See sample anchor load calculations on back cover flap).

$$F\rho = \frac{2 A \rho V^2}{g} \times \frac{\sin \theta}{2}$$

[ ] ANCHOR MOMENTS:

In addition to the moments imposed upon anchors from the normal axial forces described above, consideration must also be given to additional moments due to branch connections, anchors located some distance from a change in direction, i.e., a 90° elbow, or other external forces. **Anchor design calculations must include all forces and moments.**

Table 3 - Anchor Calculation Values

Nominal Pipe Size	Thrust Area a - in²	Packing Friction Force Fc - lbs.	Pressure Thrust Fp - lbs.		Pipe Support Friction Fs - lbs./100 ft.	
			150 psi	300 psi	Water	Steam
1½"	2.8	1,500	420	840	215	185
2"	4.4	2,000	660	1,320	270	220
2½"	6.5	2,500	975	1,950	390	320
3"	9.6	3,000	1,440	2,880	485	370
4"	15.9	4,000	2,385	4,770	735	545
5"	24.3	5,000	3,645	7,290	1,005	700
6"	34.5	6,000	5,175	10,350	1,315	880
8"	58.4	8,000	8,760	17,520	2,030	1,275
10"	90.8	10,000	13,620	27,240	3,000	1,805
12"	127.7	12,000	19,155	38,310	3,900	2,180
14"	153.9	14,000	23,085	46,170	4,500	2,385
16"	201.0	16,000	30,150	60,300	5,500	2,720
18"	254.5	18,000	38,175	76,350	6,710	3,160
20"	314.0	20,000	47,100	94,200	7,920	3,505
24"	452.0	24,000	67,000	135,600	10,770	4,330

Notes:

1. The packing friction forces shown, Fc, are applicable for an operating pressure up to 300 psig. Consult factory for values at pressures greater than 300 psig.
2. Tabulated values of Fs are based upon the following:
   (a) Carbon steel standard wall pipe.
   (b) Insulation material thickness to 500°F (Calcium Silicate).
   (c) Mean Static Coefficient of friction of 0.35.
3. For piping systems utilizing graphite on graphite guides and supports, multiply the tabulated Fs values by 0.45.

General Guidelines for Guiding when using ATS Thermal Pak TP2 Expansion Joints:

1. Table 4 shows the recommended location for the primary guide, and the recommended spacing for the intermediate guides and supports. The Primary guide spacings shown are for use with standard wall pipe and are satisfactory for above ground and tunnel installations. They are applicable to the following:
   a. Single Expansion Joints with integral anchor base or Single Expansion Joints installed immediately adjacent to an anchor.
   b. Double Expansion Joints.

2. When a Single Expansion Joint without base is installed in the center, or approximate center, of a pipe run, the primary guide spacing must be modified as follows:
   a. Sizes 1½" to 4" inclusive: Primary guides should be located six (6) pipe diameters from each end of the expansion joint.
   b. Sizes 5" to 24" inclusive: Primary guides should be located three (3) pipe diameters from each end of the expansion joint.
   c. To preclude the possibility of cocking the slip on heavier expansion joints, 6" and larger, a sliding support under the expansion joint is recommended.

TABLE 4
PIPE ALIGNMENT GUIDE AND SUPPORT SPACING

Nominal Pipe Size	Primary (1st) Guide from End(s) of Slip (Feet)	Intermediate Guide Spacing (Feet)				Pipe Support Spacing (Note 5)	
		Pressure (PSIG)				Water	Steam
		100	150	300	400		
1½	1½	8	8	7	7	8	10
2	2	9	9	8	8	10	13
2½	2	12	12	11	11	11	14
3	3	15	15	12	12	12	15
4	4	20	20	18	16	14	17
5	6	28	27	25	22	16	18
6	6	35	33	30	27	17	21
8	8	48	45	40	35	19	24
10	8	65	60	55	50	22	27
12	12	75	70	60	55	23	30
14	12	80	75	65	60	25	32
16	16	90	85	75	70	27	35
18	20	100	95	85	80	28	37
20	20	110	105	95	90	30	39
24	25	130	125	110	100	32	42

3. Whenever possible, valves or other heavy accessories should not be installed in the pipe run between the slip and the first guide. **Where this is not possible, the valve or accessory must be supported on a sliding support.**

4. Installations using a buried conduit system with expansion joints installed in manholes or vaults, require guiding at the manhole wall. Properly sized and installed gland and link seals are considered adequate guiding. In addition, consideration should be given to installation of a "moment" guide within 10 ft. of the manhole wall. Moment guides should not be attached to the manhole wall. "BRONZALON" low friction guide inserts should be used with all expansion joints used in buried conduit systems.

5. PIPE GUIDE/SUPPORT SELECTION: See ATS Bulletin PG594 for detailed information concerning guides and supports.
   Primary Guide: The preferred design for primary guides are those that guide the pipe to allow only axial movement, such as the ATS "GA" Radial Pipe Guide, or the ATS Fig 101 and Fig 100 Low Friction Pipe Guide.
   Intermediate Guides: The ATS Fig 101 and Fig 100 Low Friction Pipe Guide are recommended for intermediate guides.
   Supports: The ATS Fig 201 and Fig 200 Low Friction Pipe Supports are recommended for all pipe support locations.

Note: Roller supports should not be considered low friction supports. While rollers almost always roll when first installed, normally after a period of time the rolling mechanism will corrode, greatly increasing the friction force transmitted back to the pipe anchor.

6. The pipe support spacing shown in Table 4 is the maximum span as specified by the ASME/ANSI Power Piping Code B31.1, and is applicable for horizontal straight runs of pipe, without concentrated loads such as valves or heavy fittings between supports. The span distance applies to standard weight or heavier pipe operating at a maximum temperature of 750°F (400°C).

7. Lateral Forces on Guides: Pipe alignment guides and their support structures may be subjected to lateral forces in addition to the frictional forces along the longitudinal axis of the pipe. It is recommended that both the pipe guide and support structure be designed to resist a lateral load force equal to 250 lb./inch of nominal pipe diameter.

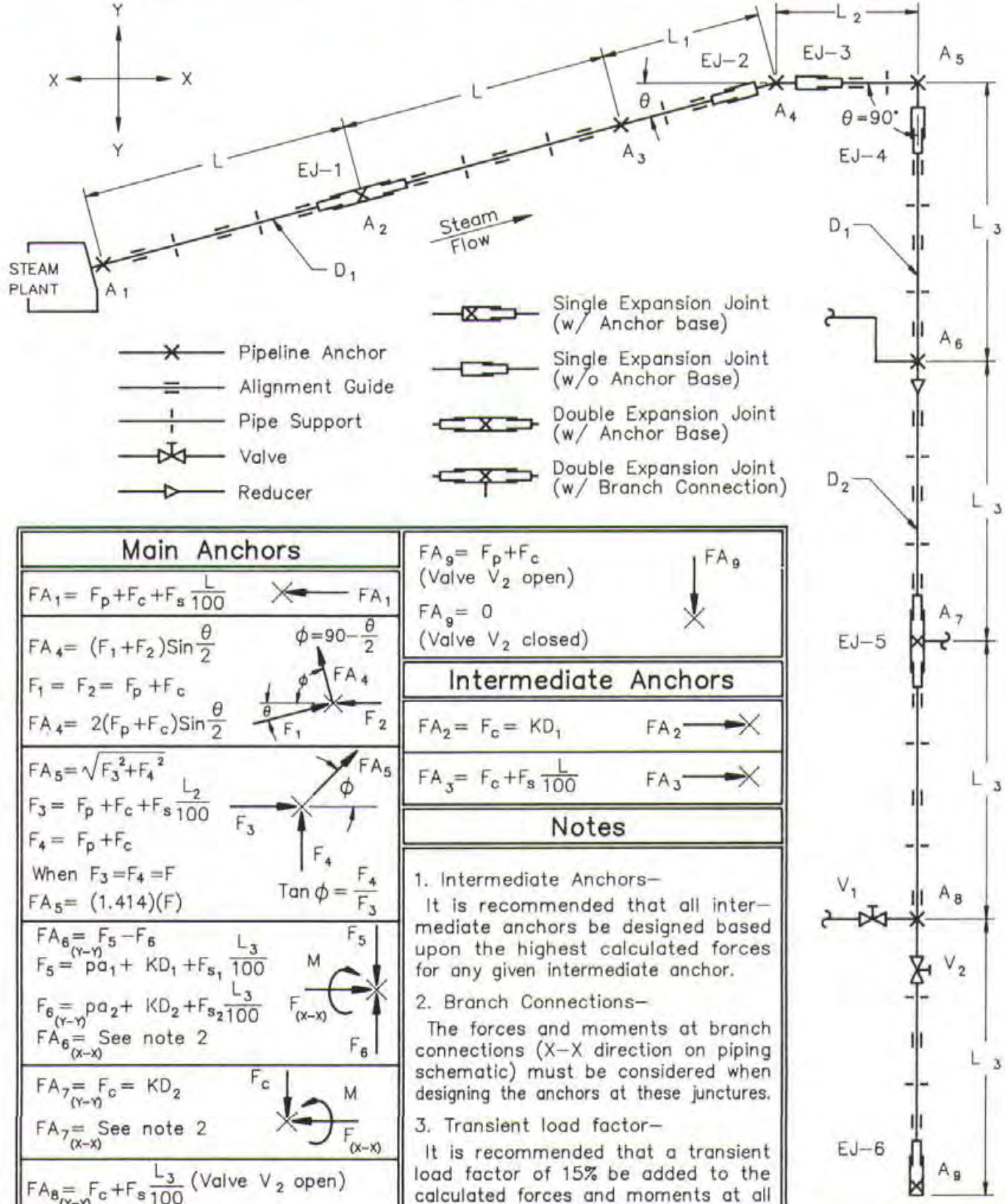

Main Anchors

$FA_1 = F_p + F_c + F_s \frac{L}{100}$

$FA_4 = (F_1 + F_2)\sin\frac{\theta}{2}$

$F_1 = F_2 = F_p + F_c$

$FA_4 = 2(F_p + F_c)\sin\frac{\theta}{2}$

$\phi = 90 - \frac{\theta}{2}$

$FA_5 = \sqrt{F_3^2 + F_4^2}$

$F_3 = F_p + F_c + F_s \frac{L_2}{100}$

$F_4 = F_p + F_c$

When $F_3 = F_4 = F$

$FA_5 = (1.414)(F)$

$\tan\phi = \frac{F_4}{F_3}$

$FA_{6_{(Y-Y)}} = F_5 - F_6$

$F_5 = pa_1 + KD_1 + F_{s_1}\frac{L_3}{100}$

$F_{6_{(Y-Y)}} = pa_2 + KD_2 + F_{s_2}\frac{L_3}{100}$

$FA_{6_{(X-X)}}$ = See note 2

$FA_{7_{(Y-Y)}} = F_c = KD_2$

$FA_{7_{(X-X)}}$ = See note 2

$FA_{8_{(Y-Y)}} = F_c + F_s \frac{L_3}{100}$ (Valve V_2 open)

$FA_{8_{(Y-Y)}} = F_p + F_c + F_s \frac{L_3}{100}$ (Valve V_2 closed)

$FA_{8_{(X-X)}}$ = See note 2

$FA_9 = F_p + F_c$ (Valve V_2 open)

$FA_9 = 0$ (Valve V_2 closed)

Intermediate Anchors

$FA_2 = F_c = KD_1$

$FA_3 = F_c + F_s \frac{L}{100}$

Notes

1. Intermediate Anchors–
It is recommended that all intermediate anchors be designed based upon the highest calculated forces for any given intermediate anchor.

2. Branch Connections–
The forces and moments at branch connections (X–X direction on piping schematic) must be considered when designing the anchors at these junctures.

3. Transient load factor–
It is recommended that a transient load factor of 15% be added to the calculated forces and moments at all anchor points, to allow for system pressure surges and/or other unknown conditions which may occur during the operating life of the system.

SAMPLE CALCULATIONS OF ANCHOR FORCES A_1 TO A_9 ALONG AXIS OF PIPELINE FURNISHED ON REQUEST.

SAMPLE ANCHOR LOAD CALCULATIONS

On the adjacent page is a sample pipe layout showing locations of expansion joints, pipe anchors, pipe guides and pipe supports. The formulas for calculating the forces on each anchor is given. A more detailed example of the same model layout is available from ATS. Ask for Engineering Bulletin EJ-1091.

Key To Symbols:

F - Anchor Force, lbs.
Note: This force acts along the longitudinal axis of the pipe run.

p - System Design Pressure, psig
Note: The test pressure should be considered when designing the anchors. The stresses for steel components at the test pressure should not exceed 80% of the materials' minimum yield strength.

a - Effective Thrust Area of the expansion joint, in^2. See Table 3.

K - Packing Friction Constant, 1000 lbs.
Note: For systems with an operating pressure above 300 psig, consult factory for the appropriate packing friction constant.

D - Nominal Pipe Size, in.

L - Length of Pipe Run, ft.

A - Internal Area of Pipe, $ft.^2$

ρ - Fluid Density, $lbs./ft.^3$

V - Velocity of Fluid, ft./sec.

g - Acceleration Due To Gravity, 32.2 $ft./sec.^2$

θ - Angle of Pipe Bend

ATS now offers pre-engineered pre-fabricated anchors. ATS factory fabricated anchors offers the assurance of knowing the anchor will be properly designed and fabricated to meet the application requirements. Designs are easily modified to accommodate various centerline height and load requirements. ATS can supply the anchor either attached to a heavy wall pipe spool section, with ends machined to match the mating pipe, or as a loose assembly for field attachment. Branch connections up to the size of the pipe run can be incorporated for simplified field installation.
See ATS Bulletin P594 for a complete description of ATS Anchors.

8" Fig. 701-SPC-B-1
8" Main Anchor Designed for 400 PSI System with
8" Schedule 80 Pipe Spool

ADVANCED THERMAL SYSTEMS, INC.

1st IN DESIGN, SERVICE, PERFORMANCE & RELIABILITY

Other Quality ATS Products:

[ ] THERMAL PAK FLEXIBLE BALL JOINTS:

Applications

- Linear thermal pipe movement
- Stationary piping to moving equipment
- Moving piping to stationary equipment
- Pipe isolation for seismic events

ATS Series "P2" and "S2" Ball Joints

- Integral Socket/Retainer Flange
- Injectable Packing:
  - Series "P2" - Packable at full system pressure
  - Series "S2" - Pressures to 2,500 psig
- Ductile Iron Seals - Temperatures up to 800°F

Request ATS Bulletin BJ-794 for more information on the ATS Thermal Pak Ball Joint.

Installations using Ball Joints require an "Off-Set" in the pipe run, and a minimum of two ball joints.

[ ] PIPE GUIDES, PIPE SUPPORTS AND PIPE ANCHORS:

- Low Friction Graphite Guides and Supports:
  - Un-Insulated for Hot Service
  - Pre-Insulated for Cold Service
  - 1/2" Thick Graphite on both contact surfaces Reduces Anchor Loading
- Radial "Spider Type" Alignment Guides
- Pre-Engineered Anchors

Request ATS Bulletin P-594 for more information on ATS Pipe Guides - Pipe Supports and Pipe Anchors.

10" Pre-Insulated Pipe Support

ADVANCED THERMAL SYSTEMS, INC.
15 Enterprise Drive, Lancaster, NY 14086
Phone: 716-681-1800 Fax: 716-681-0228
Internet Address: http://www.localnet.com/~ats
E-Mail address: ats@localnet.com
Toll Free: 800-443-9194

©ADVANCED THERMAL SYSTEMS, INC. 1998

MEMBER INTERNATIONAL DISTRICT ENERGY ASSOCIATION

Printed in U.S.A.

Triple Offset Metal Seated
Butterfly Valve

A GFT COMPANY

Extreme 6000 Series

Sizes
3" - 72"

ABZ VALVES & CONTROLS
PO Box 157 • 113 W. Main • Madison, KS 66860
620-437-2440 • FAX 620-437-2435
www.abzvalve.com • info@abzvalve.com

Principle of Triple Offset Valve Design

1st Offset

The axis of the shaft is placed behind the centerline of the sealing point.
Purpose: To provide positive sealing and increased sealing capacity

2nd Offset

The axis of the shaft is eccentric to the center of the valve and the pipe line.
Purpose: To reduce the running torque and the friction between the disc and seat

3rd Offset

The seat cone axis is off set from the shaft centerline to eliminate friction during closing and opening.
Purpose: To achieve uniform compressive sealing around the entire seat.

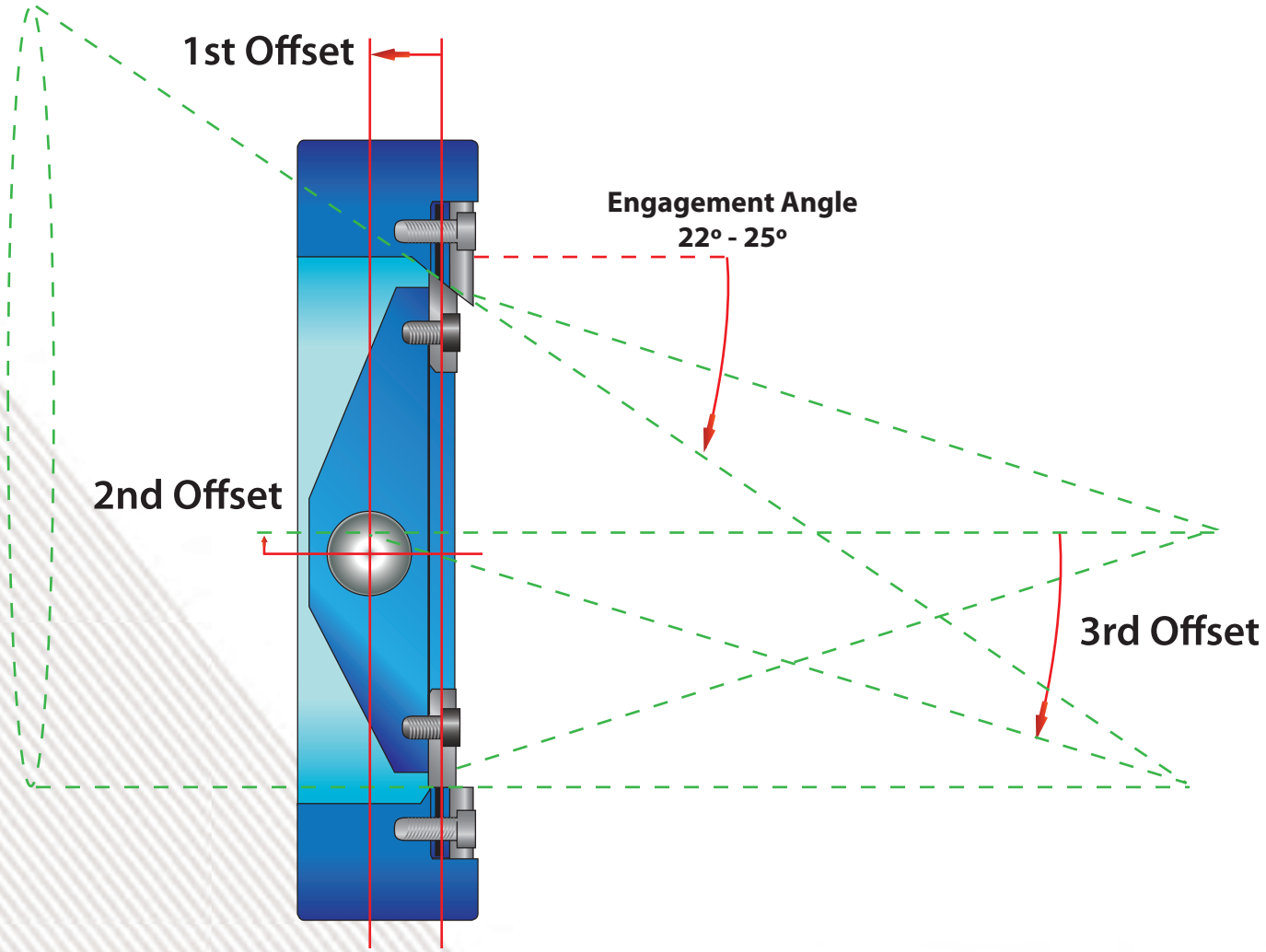

Principle of Sealing

The basic sealing principle of a Triple off valve is to utilize a conical seating system. Many valve designs have an integral seat to the valve body and a laminated disc seat located directly in the path of the flow media. The ABZ "body seat design" the laminated seat is located in the body and the solid seal is secured to the disc. Direct exposure to flow is reduced to any laminate surfaces. This unique ABZ design allows for field replaceable body seal and disc seat without special tools.

Competitors Disc Seat Design

- Laminated disc seat are susceptible to flow erosion. (Replaceable)
- Solid seal is integral to the body. (Non-replaceable)

ABZ Body Seat Design

- Laminated body seat are indirect to flow and less susceptible to erosion. (Replaceable)
- Solid disc seal (Replaceable)

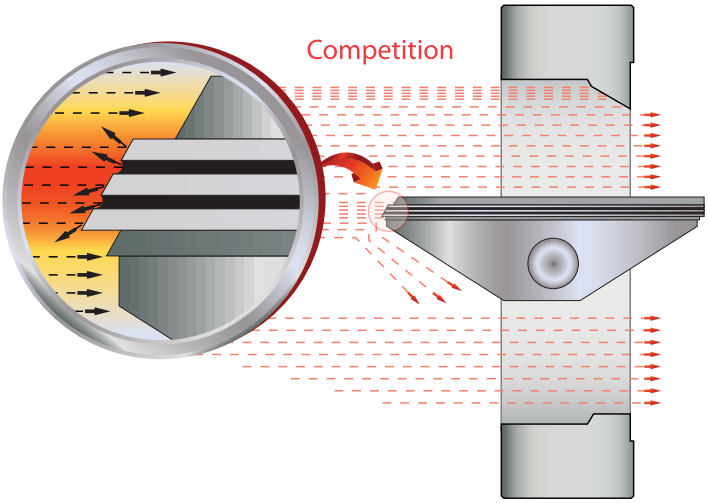

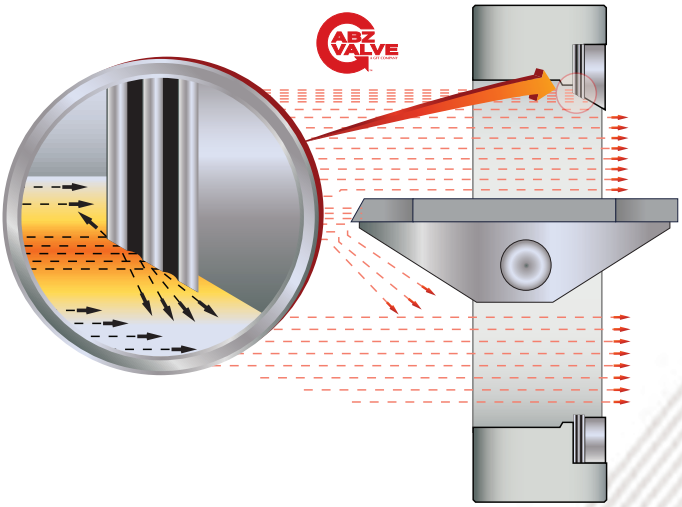

	Disc Seat Deign (Competition)	Body Seat Design(ABZ)
Body Seat	Integral welded	Laminate Metal+Graphite
Disc Seat	Laminate Metal+Graphite	Solid Metal
Seat Replacement	Disc Seat only	Both Disc & Body Seat
Friction of Laminate Seat	High	Low

Sealing System

All sealing parts (disc seat, body seat and retainer plate) are machined geometrically to reduce friction on the sealing surface and to provide a tight shut off for long term service without interference of the metal - to - metal sealing mechanism.

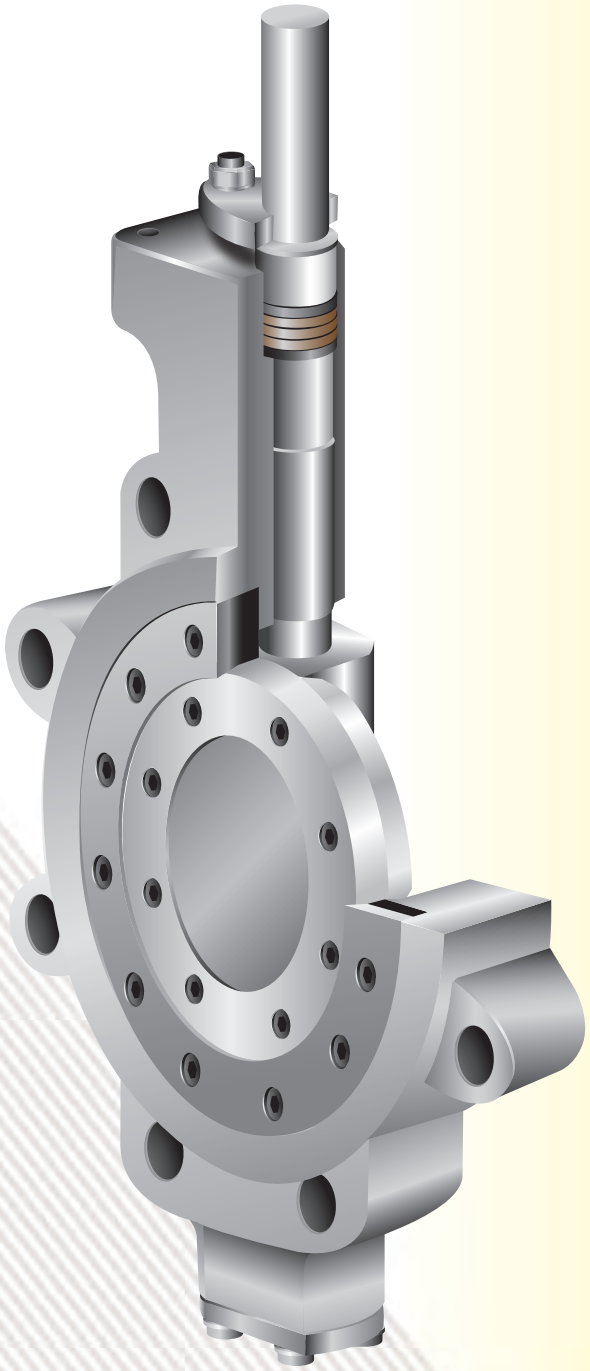

Stem and Packing

• The high temperature graphite stem packing provides constant compression for a positive seal around the stem preventing fugitive emissions and providing fire safe protection.

• One piece shaft enables the valve to withstand full bi-directional pressure and vacuum service. All 6000 series valves are design per API 609 standards, including shaft retention system. This insures our customer a safe and reliable product.

• Internal keyed and pinned connection aligns the disc seal to the body seat.

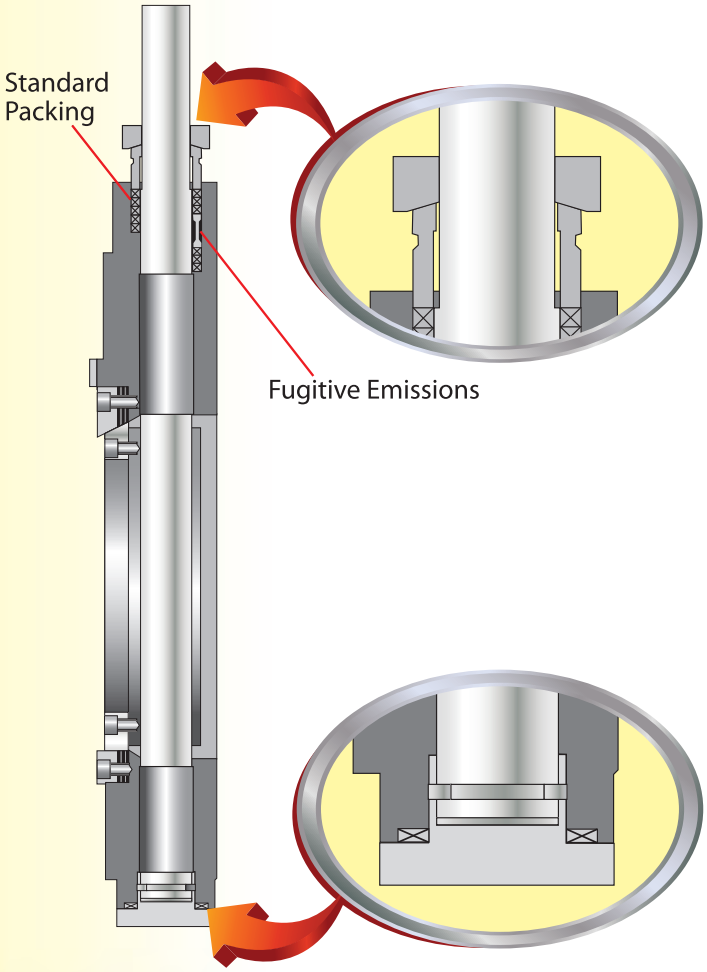

Comparison with other type of Valves

Features	Triple offset valve	Globe valve	Gate valve	Ball valve
End Connection	Wafer, Lugged, Flanged, Buttweld End	Flanged, Screwed, Welded	Flanged, Welded	Flanged, Welded
Weight	Light	Heavy	Heavy	Heavy
Face-to-Face	Short	Long	Long	Long
Working Temperature	High	High	High	High
Sealing Performance	Tight shut off	Tight shut off or Class IV	Tight shut off or Class IV	Tight shut off or Class IV
Seat Friction	Low	High	High	High
Bi-Directional	Yes	No	Yes	Yes
Fire Safe	Yes	Yes	Yes	Yes
Torque	Low	High	High	High
Maintenance in field	Easy	Difficult	Difficult	Difficult

Alternative for Gate and Globe valve

With its sealing capacity at high temperature, Extreme 6000 Series valves are popular among the plant engineers and is considered as an ideal valve to replace or substitute the globe and gate valve.

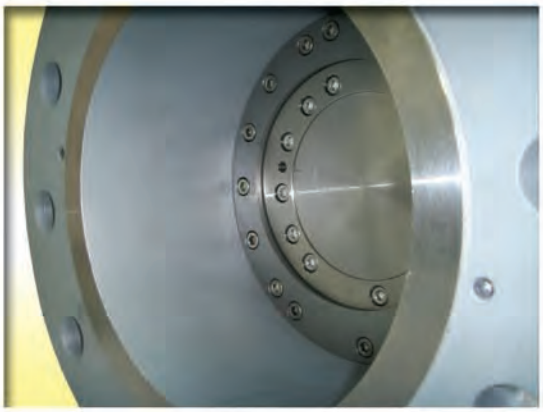

Long Pattern Triple

Globe valve Face-to-face

Tight Shut-off at full rating

Extreme 6000 Series valves provide zero leakage in both directions at full pressure rating with Air/Gas/Liquid applications. They are widely used for the application that requires tight shut-off.

High Temp. Vacuum service-1

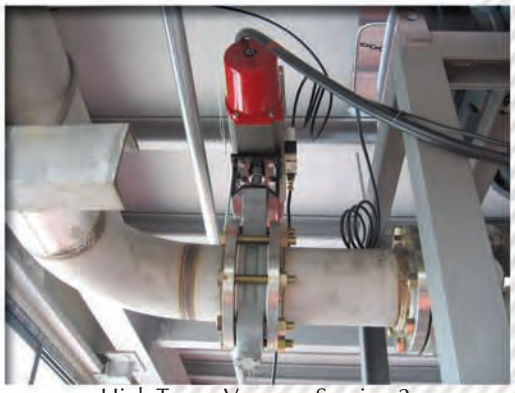

High Temp. Vacuum Service-2

Construction of Extreme 6000 Series

Construction

Diagram

No.	Description
1	Body
2	Disc
3	Disc Seal
4	Body Seat
5	Seat Retainer
6	Seat Retainer Screw
7	Body Seat Gasket
8	Disc Seal Gasket
9	Shaft
10	Disc Seal Screw
11	Key
12	Disc Pin
13	Shaft Bearing

Construction

Diagram

No.	Description
14	Collar
15	Packing Retainer
16	Packing
17	Packing Gland
18	Gland Flange
19	Stud Bolt
20	Spring Washer
21	Nut
22	End Cap
23	End Gasket
24	Shaft Retainer
25	End Cap Screw
26	Spring Washer

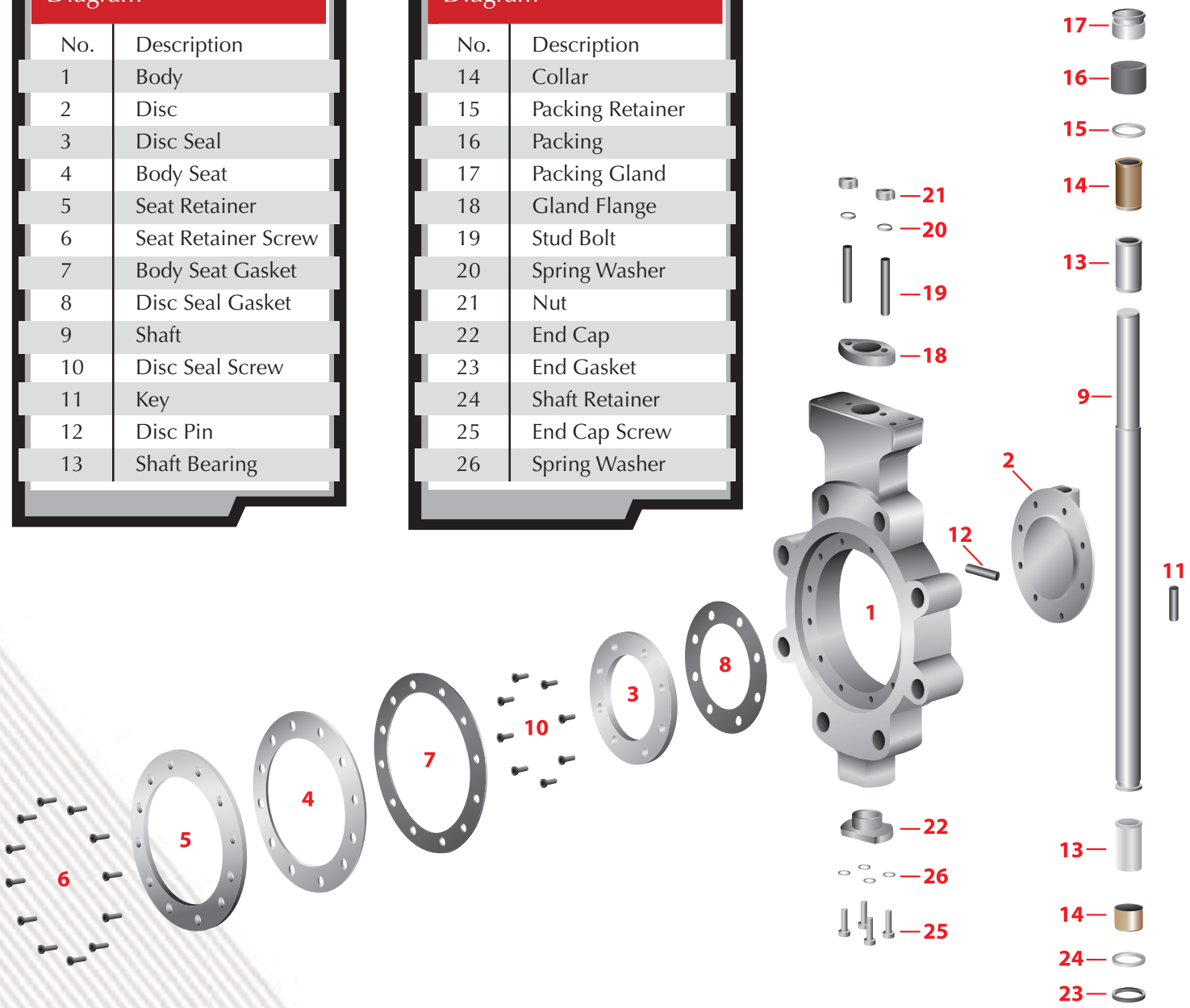

Design Standards

Design	API Std 609, ANSI/ASME B16.34
Classes	Class 150 - Class 600
Size	3"(80mm) - 48"(1200mm)
Body Style	Lugged, Wafer, Flanged
Flange Drilling	ANSI/ASME B16.5, ANSI/ASME B16.47, ISO 7005, DIN2501
Face to Face Dimensions	ANSI/ASME B16.10, API 609, ISO5752, BS5155
Applicable Temperature Range	~ + 1000°F(538°C) for Standard*
Pressure Tests	API Std 598, ISO 5208
Operator	Manual, Electric, Pneumatic, Hydraulic

*1. Applicable temperatures varies with material.
2. 750°F(400°C) or less in an oxidized atmosphere.

Material & Specifications

Part #	Description	Material	Material
1	Body	A216-WCB	A351-CF8M
2	Disc	A216-WCB	A351-CF8M
3	Disc Seal	Stainless Steel 316	Stainless Steel 316
4	Body Seat	Laminated Stainless Steel 316/ Graphite	Laminated Stainless Steel 316/ Graphite
5	Seat Retainer	Steel	Stainless Steel 316
6	Seat Retainer Screw	Stainless Steel 304	Stainless Steel 316
7	Body Seat Gasket	Graphite	Graphite
8	Disc Seal Gasket	Graphite	Graphite
9	Shaft	A564-630 H1100	A564-630 H1100
10	Disc Seal Screw	Stainless Steel 304	Stainless Steel 316
11	Key	630 SS	630 SS
12	Disc Pin	Stainless Steel 316	Stainless Steel 316
13	Shaft Bearing	Stainless Steel 304 + Nitr. or Hcr.	Stainless Steel 316 + Nitr. Or Hcr.
14	Collar	Stainless Steel 304	Stainless Steel 316
15	Packing Retainer	Stainless Steel 316	Stainless Steel 316
16	Packing	Graphite	Graphite
17	Packing Gland	Stainless Steel 304	Stainless Steel 316
18	Gland Flange	Stainless Steel 304	Stainless Steel 316
19	Stud Bolt	Stainless Steel 304	Stainless Steel 316
20	Spring Washer	Stainless Steel 304	Stainless Steel 316
21	Nut	Stainless Steel 304	Stainless Steel 316
22	End Cap	Steel	Stainless Steel 316
23	End Gasket	Graphite	Graphite
24	Shaft Retainer	Stainless Steel 316	Stainless Steel 316
25	End Cap Screw	Stainless Steel 304	Stainless Steel 316
26	Spring Washer	Stainless Steel 304	Stainless Steel 316

Option	
Body Seat	Laminated Duplex Stainles Steel/Graphite, Laminated Inconel/Graphite, Lanimated Monel/Graphite, Laminated Hastelloy/Graphite
Disc Seal Surface	Stellite

** Other materials are available on request.

Available Materials

- Hastelloy
- Duplex 2205
- ALX6N
- SMO 254/255
- Monel

Other materials are available on request.

Low Temperature/Cryogenic:

The Extreme 6000 series provides a surplus of options for applications that were not offered before to customers. Ultimate low temperature service (Cryogenic service) is one of many industries that can use Extreme 6000 Series Valves.

The Cryogenic valves meet the requirements for BS6364 and EN12567. All parts and materials are under strict quality management and go through Cryogenic treatment before being machined.

Valves are placed in liquid nitrogen and cooled to -196C (-320 F). The shell and seat are tested with helium gas in both directions.

Fire Safe Design

Our Extreme 6000 Valve is certified to API 607 and API 6FA. Valves provide zero leakage before, during and after fire.

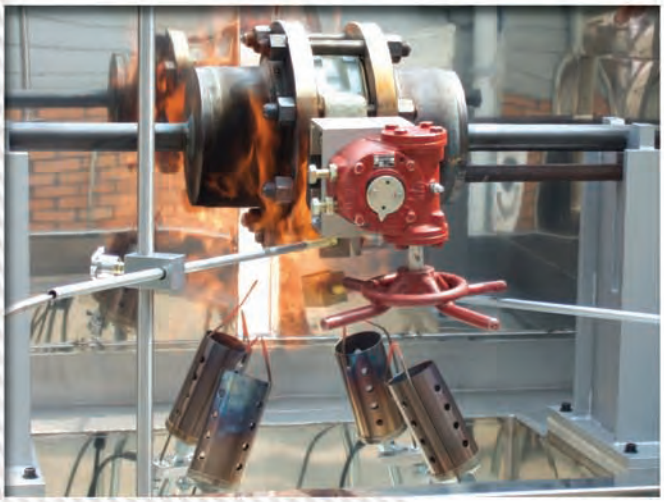

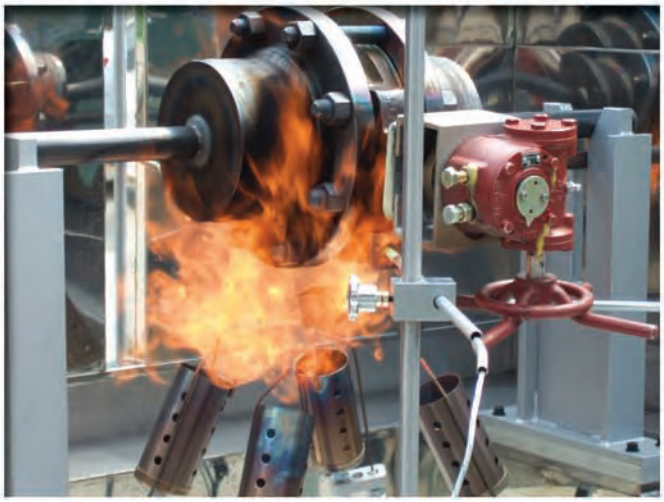

A126 Gr. WCB

Pressure - Temp. Rating

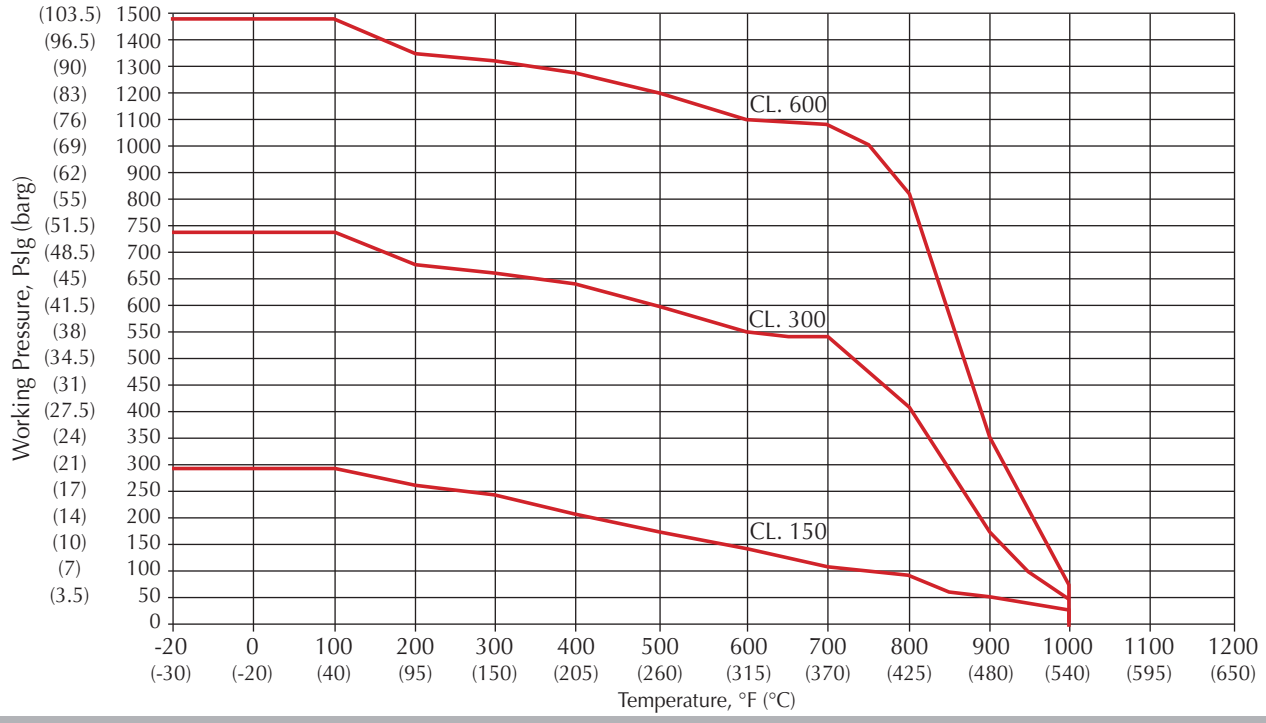

A351 Gr. CF8M

Pressure - Temp. Rating

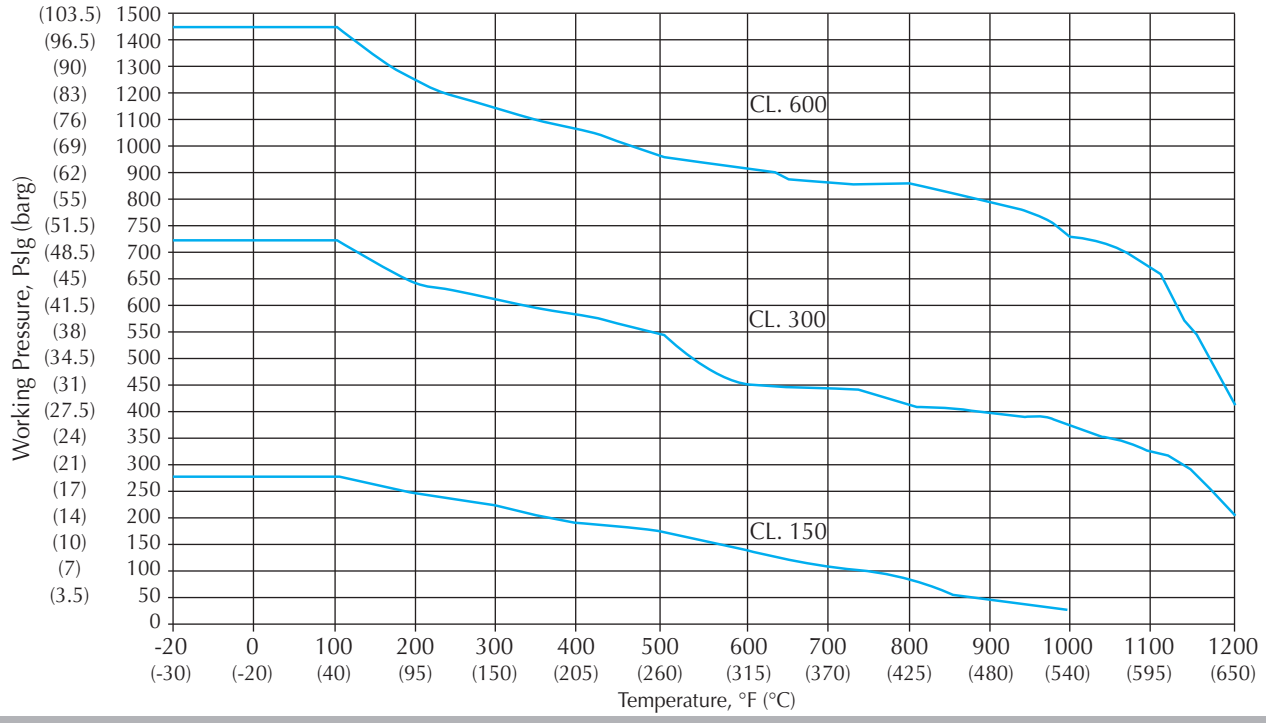

Extreme SERIES 6000 Cv Curve

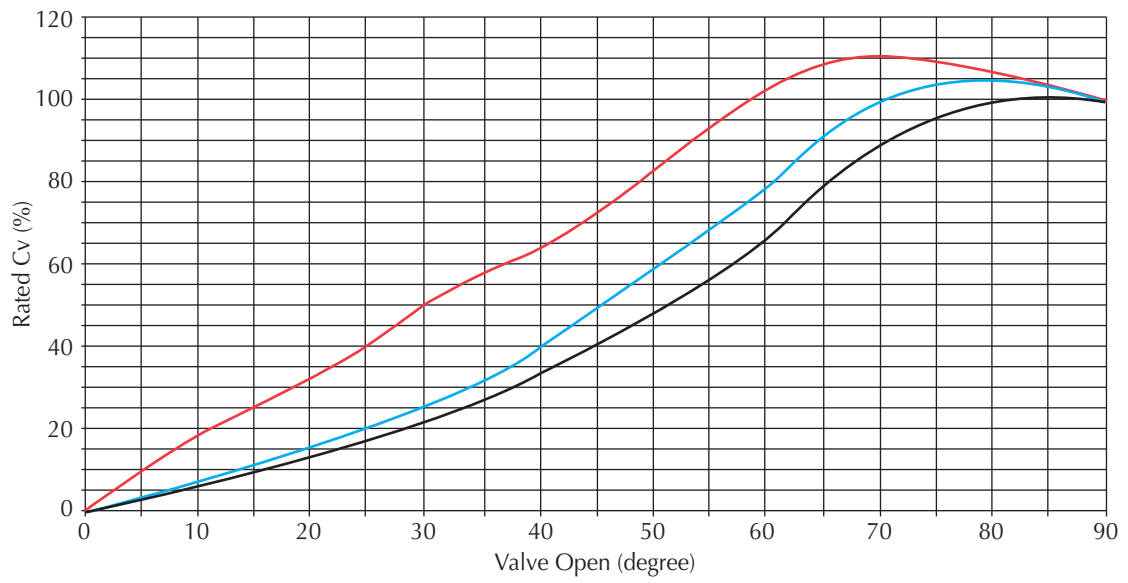

Cv Value SERIES 6000 Triple Offset Valve - Class 150

Size		Valve Opening (degree)								
inch	mm	10	20	30	40	50	60	70	80	90
3	80	16	29	45	62	79	95	102	99	92
4	100	30	55	86	118	151	180	194	189	175
6	150	51	108	182	276	394	536	654	719	695
8	200	79	170	303	488	715	980	1236	1422	1444
10	250	128	275	489	787	1152	1580	1992	2292	2327
12	300	210	451	803	1293	1893	2597	3274	3768	3825
14	350	271	581	1034	1665	2438	3344	4216	4851	4925
16	400	367	787	1401	2255	3303	4530	5711	6572	6672
18	450	494	1061	1888	3039	4450	6104	7695	8855	8990
20	500	605	1298	2310	3718	5445	7469	9416	10835	11000
24	600	822	1763	3137	5049	7394	10143	12787	14714	14938
26	650	1064	2283	4062	6539	9576	13135	16559	19055	19345
28	700	1331	2856	5082	8180	11979	16432	20715	23837	24200
30	750	1579	3388	6030	9706	14214	19498	24581	28285	28716
32	800	1861	3993	7107	11439	16752	22979	28970	33335	33843
34	850	2081	4456	7945	12788	18728	25690	32387	37267	37835
36	900	2309	4954	8816	14189	20780	28504	35935	41350	41980
40	1000	3003	6443	11466	18455	27027	37073	46738	53781	54600
42	1050	3201	6868	12222	19672	28809	39518	49819	57327	58200
46	1150	4100	8796	15653	25195	36897	50613	63806	73422	74540
48	1200	4279	9180	16338	26296	38511	52826	66597	76633	77800

Cv Value SERIES 6000 Triple Offset Valve - Class 300

Size		Valve Opening (degree)								
inch	mm	10	20	30	40	50	60	70	80	90
3	80	16	29	45	62	79	95	102	99	92
4	100	30	55	86	118	151	180	194	189	175
6	150	44	93	157	238	340	463	565	620	600
8	200	67	143	255	410	600	823	1037	1194	1212
10	250	120	257	458	737	1079	1480	1866	2147	2180
12	300	188	402	716	1153	1688	2316	2920	3360	3411
14	350	248	532	947	1524	2232	3062	3861	4442	4510
16	400	327	702	1249	2010	2943	4037	5090	5857	5946
18	450	446	956	1702	2739	4012	5503	6938	7983	8105
20	500	548	1176	2094	3370	4935	6770	8534	9820	9970
24	600	759	1628	2898	4664	6831	9370	11813	13593	13800
26	650	976	2094	3726	5998	8784	12049	15190	17479	17745
28	700	1130	2425	4315	6945	10171	13951	17588	20239	20547
30	750	1332	2857	5084	8183	11984	16439	20725	23848	24211
32	800	1656	3552	6321	10174	14900	20438	25766	29649	30100
34	850	1887	4047	7203	11593	16979	23290	29361	33786	34300
36	900	2140	4590	8169	13148	19256	26413	33298	38317	38900

Cv Value SERIES 6000 Triple Offset Valve - Class 600

Size		Valve Opening (degree)								
inch	mm	10	20	30	40	50	60	70	80	90
4	100	25	46	73	100	128	152	164	160	148
6	150	41	87	147	223	318	433	528	580	561
8	200	52	111	197	318	465	638	805	926	940
10	250	88	189	336	540	791	1085	1368	1574	1598
12	300	146	313	557	896	1313	1801	2270	2612	2652
14	350	215	461	820	1320	1933	2651	3343	3846	3905
16	400	285	612	1089	1753	2567	3521	4438	5107	5185
18	450	392	840	1495	2407	3524	4834	6095	7013	7120
20	500	501	1074	1911	3076	4505	6179	7790	8964	9100
24	600	693	1487	2646	4259	6237	8555	10786	12411	12600

A GFT COMPANY

Common Applications

- Power Plants
- Hydrogen
- Pulp and Paper
- Oxygen Service
- High & Low Temperature Service
- Chemical Plants
- Saturated Steam
- Oil and Gas Processing
- Refinery
- Cryogenic Service
- Temperature Pressure Rating

ABZ VALVES & CONTROLS
PO Box 157 • 113 W. Main • Madison, KS 66860
620-437-2440 • FAX 620-437-2435
www.abzvalve.com • info@abzvalve.com

DANGER
CONTAINS ASBESTOS FIBERS
AVOID CREATING DUST
CANCER AND LUNG DISEASE HAZARD
OID BREATHING AIRBORNE ASBESTOS FIBERS
.Q., ASBESTOS, CLASS 9, NA 2212 P.G. III

HOT WT.
VLV.

ST.

CH UR
CH US

STRUCTURAL - PHOTOGRAPHS

Photo No. 1: Water infiltration has led to concrete spalling and deterioration in the main tunnel leading from the heat plant.

Photo No. 2: This is an example of the vented deck used for the tunnel lid mentioned in item 3.

Photo No. 3: Critical roof deterioration described in item 3a in the mainline tunnel section. Concrete that has fallen can be seen laying on the pipe.

Photo No. 4: Another critical area of roof deterioration described n item 3a.

Photo No. 5: This is an example of typical deck corrosion in the 1979 tunnel additions, item #2.

Photo No. 6: Another example of typical deck failure in the 1979 tunnel additions, item #2.

Photo No. 7: Another example of typical deck failure in the 1979 tunnel additions, item #2.

Photo No. 8: Most of the 1979 tunnels occur below sidewalks, like the one shown here. This sidewalk is a concrete slab on metal deck over a tunnel. The cracks in the sidewalk often reflect through to corroded deck below with conditions similar to those shown in photos 5-7.

ESTIMATE OF PROBABLE CONSTRUCTION COST
DIVISION 16 - ELECTRICAL WORK
THOMAS & KOLKMAN ENGINEERING CO. INC.

PROJECT: UTILITY TUNNEL DISTRIBUTION STUDY
UTAH STATE DEVELOPMENTAL CENTER
AMERICAN FORK, UTAH

☒ SCHEMATIC ☐ DESIGN DEVELOPMENT
☐ CONST. DOCUMENTS ☐ OTHER:
Prepared By: W.B. GRANDY DATE: 1/17/13

ITEM	QUANT	UNIT	UNIT COSTS MAT'L	UNIT COSTS LABOR	UNIT COSTS TOTAL	EXTENSIONS MAT'L	EXTENSIONS LABOR	EXTENSIONS TOTAL
EXISTING TUNNELS ELECTRICAL WORK								
EXISTING TUNNEL A								
REMOVE EXISTING FIXTURE	36	EA	0.00	29.48	29.48	0	1,071	1,071
REMOVE BRANCH CIRCUIT WIRING	1,130	FT	0.00	0.11	0.11	0	127	127
REMOVE ABANDONED COMM. CABLES	450	FT	0.00	0.71	0.71	0	321	321
NEW FLOURESCENT FIXTURE	31	EA	176.88	228.34	405.22	5,552	7,167	12,719
NEW LIGHTING BRANCH CIRCUIT, 3/4" C	600	FT	2.58	6.48	9.05	1,545	3,885	5,430
NEW 3-WAY SWITCH	4	EA	65.94	79.17	145.11	264	317	580
NEW GFCI RECEPTACLE	11	EA	74.56	69.58	144.14	820	765	1,586
NEW RECEPTACLE BRANCH CIRCUIT, 3/4" C	600	FT	2.00	5.45	7.45	1,200	3,272	4,472
RESUPPORT BRANCH CIRCUIT CONDUIT	150	FT	0.15	0.63	0.78	22	95	117
RESUPPORT MV CABLE	300	FT	1.23	2.87	4.09	368	860	1,228
MISCELLANEOUS ELECTRICAL WORK	565	FT	0.63	1.59	2.22	353	901	1,254
SUBTOTAL: TUNNEL A						**$ 10,124**	**$ 18,781**	**$ 28,905**
EXISTING TUNNEL B								
NEW RECEPTACLE BRANCH CIRCUIT, 3/4" C								
REMOVE EXISTING FIXTURE	33	EA	0.00	29.48	29.48	0	983	983
REMOVE BRANCH CIRCUIT WIRING	1,040	FT	0.00	0.11	0.11	0	116	116
REMOVE ABANDONED COMM. CABLES	200	FT	0.00	0.71	0.71	0	143	143
NEW FLOURESCENT FIXTURE	29	EA	176.88	228.34	405.22	5,110	6,596	11,706
NEW LIGHTING BRANCH CIRCUIT, 3/4" C	550	FT	2.58	6.48	9.05	1,416	3,561	4,978
NEW 3-WAY SWITCH	8	EA	65.94	79.17	145.11	528	633	1,161
NEW GFCI RECEPTACLE	10	EA	74.56	69.58	144.14	746	696	1,441
NEW RECEPTACLE BRANCH CIRCUIT, 3/4" C	550	FT	2.00	5.45	7.45	1,100	2,999	4,099
MISCELLANEOUS ELECTRICAL WORK	520	FT	0.63	1.59	2.22	325	829	1,154
SUBTOTAL: TUNNEL B						**$ 9,224**	**$ 16,557**	**$ 25,781**
EXISTING TUNNEL C								
REMOVE ABANDONED COMM. CABLES								
REMOVE EXISTING FIXTURE	31	EA	0.00	29.48	29.48	0	925	925
REMOVE BRANCH CIRCUIT WIRING	1,170	FT	0.00	0.11	0.11	0	131	131
NEW FLOURESCENT FIXTURE	33	EA	176.88	228.34	405.22	5,748	7,421	13,169
NEW LIGHTING BRANCH CIRCUIT, 3/4" C	600	FT	2.58	6.48	9.05	1,545	3,885	5,430
NEW 3-WAY SWITCH	6	EA	65.94	79.17	145.11	396	475	871
NEW GFCI RECEPTACLE	12	EA	74.56	69.58	144.14	895	835	1,730
NEW RECEPTACLE BRANCH CIRCUIT, 3/4" C	600	FT	2.00	5.45	7.45	1,200	3,272	4,472
MISCELLANEOUS ELECTRICAL WORK	585	FT	0.63	1.59	2.22	366	933	1,298
SUBTOTAL: TUNNEL C						**$ 10,149**	**$ 17,877**	**$ 28,026**
EXISTING TUNNEL D								
SUBTOTAL: RECONNECT TRANSFORMER 'T04'								
REMOVE EXISTING FIXTURE	32	EA	0.00	29.48	29.48	0	953	953
REMOVE BRANCH CIRCUIT WIRING	990	FT	0.00	0.11	0.11	0	111	111
NEW FLOURESCENT FIXTURE	50	EA	176.88	228.34	405.22	8,755	11,303	20,058
NEW LIGHTING BRANCH CIRCUIT, 3/4" C	1,000	FT	2.58	6.48	9.05	2,575	6,475	9,050
NEW 3-WAY SWITCH	14	EA	65.94	79.17	145.11	923	1,108	2,032
NEW GFCI RECEPTACLE	20	EA	74.56	69.58	144.14	1,491	1,392	2,883
NEW RECEPTACLE BRANCH CIRCUIT, 3/4" C	1,000	FT	2.00	5.45	7.45	2,000	5,453	7,453
MISCELLANEOUS ELECTRICAL WORK	990	FT	0.63	1.59	2.22	619	1,578	2,197
SUBTOTAL: TUNNEL D						**$ 16,363**	**$ 28,373**	**$ 44,737**

ESTIMATE OF PROBABLE CONSTRUCTION COST
DIVISION 16 - ELECTRICAL WORK
THOMAS & KOLKMAN ENGINEERING CO. INC.

PROJECT: UTILITY TUNNEL DISTRIBUTION STUDY
UTAH STATE DEVELOPMENTAL CENTER
AMERICAN FORK, UTAH

☒ SCHEMATIC ☐ DESIGN DEVELOPMENT
☐ CONST. DOCUMENTS ☐ OTHER:
Prepared By: W.B. GRANDY DATE: 1/17/13

ITEM	QUANT	UNIT	UNIT COSTS MAT'L	UNIT COSTS LABOR	UNIT COSTS TOTAL	EXTENSIONS MAT'L	EXTENSIONS LABOR	EXTENSIONS TOTAL
EXISTING TUNNEL E								
REMOVE EXISTING FIXTURE	34	EA	0.00	29.48	29.48	0	993	993
REMOVE BRANCH CIRCUIT WIRING	1,030	FT	0.00	0.11	0.11	0	115	115
NEW FLOURESCENT FIXTURE	52	EA	176.88	228.34	405.22	9,109	11,760	20,869
NEW LIGHTING BRANCH CIRCUIT, 3/4" C	1,030	FT	2.58	6.48	9.05	2,652	6,669	9,322
NEW 3-WAY SWITCH	12	EA	65.94	79.17	145.11	791	950	1,741
NEW GFCI RECEPTACLE	21	EA	74.56	69.58	144.14	1,566	1,461	3,027
NEW RECEPTACLE BRANCH CIRCUIT, 3/4" C	1,030	FT	2.00	5.45	7.45	2,060	5,617	7,677
MISCELLANEOUS ELECTRICAL WORK	1,030	FT	0.63	1.59	2.22	644	1,642	2,286
SUBTOTAL: TUNNEL E						**$ 16,822**	**$ 29,207**	**$ 46,029**
EXISTING TUNNEL F								
REMOVE EXISTING FIXTURE	7	EA	0.00	29.48	29.48	0	201	201
REMOVE BRANCH CIRCUIT WIRING	225	FT	0.00	0.11	0.11	0	25	25
NEW FLOURESCENT FIXTURE	21	EA	176.88	228.34	405.22	3,714	4,795	8,510
NEW LIGHTING BRANCH CIRCUIT, 3/4" C	250	FT	2.58	6.48	9.05	644	1,619	2,263
NEW 3-WAY SWITCH	4	EA	65.94	79.17	145.11	264	317	580
NEW GFCI RECEPTACLE	4	EA	74.56	69.58	144.14	298	278	577
NEW RECEPTACLE BRANCH CIRCUIT, 3/4" C	225	FT	2.00	5.45	7.45	450	1,227	1,677
MISCELLANEOUS ELECTRICAL WORK	225	FT	0.63	1.59	2.22	141	359	499
SUBTOTAL: TUNNEL F						**$ 5,511**	**$ 8,821**	**$ 14,332**
SUBTOTAL: EXISTING TUNNELS ELECTRICAL WORK						**$ 68,193**	**$ 119,616**	**$ 187,810**
SUBCONTRACTOR OVERHEAD & PROFIT	**15%**							**28,171**
TOTAL: EXISTING TUNNELS ELECTRICAL WORK								**$ 215,981**

ESTIMATE OF PROBABLE CONSTRUCTION COST
DIVISION 16 - ELECTRICAL WORK
THOMAS & KOLKMAN ENGINEERING CO. INC.

PROJECT: UTILITY TUNNEL DISTRIBUTION STUDY
UTAH STATE DEVELOPMENTAL CENTER
AMERICAN FORK, UTAH

☒ SCHEMATIC ☐ DESIGN DEVELOPMENT
☐ CONST. DOCUMENTS ☐ OTHER:
Prepared By: W.B. GRANDY DATE: 1/17/13

ITEM	QUANT	UNIT	UNIT COSTS MAT'L	UNIT COSTS LABOR	UNIT COSTS TOTAL	EXTENSIONS MAT'L	EXTENSIONS LABOR	EXTENSIONS TOTAL
NEW TUNNELS ELECTRICAL WORK PER LINEAL FOOT								
NEW TUNNEL LIGHTING AND SWITCHES	1	LF	10.08	11.24	21.33	10.08	11.24	21.33
NEW TUNNEL RECEPTACLES	1	LF	3.02	4.24	7.26	3.02	4.24	7.26
NEW TUNNEL FIRE ALARM NETWORK WIRING	1	LF	3.63	3.09	6.71	3.63	3.09	6.71
NEW TUNNEL COMMUNICATION CABLE TRAY	1	LF	13.02	8.69	21.72	13.02	8.69	21.72
SUBTOTAL: ELECTRICAL WORK PER FOOT OF TUNNEL						**29.76**	**27.26**	**57.02**
SUBCONTRACTOR OVERHEAD & PROFIT	**15%**							**8.55**
TOTAL: ELECTRICAL WORK PER FOOT OF TUNNEL								**$ 65.57**

ADDITIONAL ELECTRICAL WORK FOR NEW TUNNELS								
REPLACE MV FEEDER FROM CHILLER SWITCH 'S02' TO ELECTRICAL BUILDING SWITCH 'S03'								
NEW UNDERGROUND CONDUIT DUCTBANK	120	FT	31.95	28.92	60.87	3,834	3,471	7,304
NEW MV FEEDER CONDUCTORS, #1/0, 15 KV	1,350	FT	24.69	20.38	45.07	33,328	27,514	60,842
CONDUCTOR TERMINATION, 600 AMP ELBOW	6	EA	268.75	318.85	587.60	1,613	1,913	3,526
REMOVE EXISTING MV FEEDER CONDUCTORS	1,350	FT	0.00	3.19	3.19	0	4,300	4,300
REMOVE EXISTING MV FEEDER CONDUIT	1,050	FT	0.00	6.38	6.38	0	6,703	6,703
SUBTOTAL: RECONNECT SWITCH 'S03'						**$ 38,834**	**$ 43,955**	**$ 82,863**
REPLACE MV FEEDER FROM CHILLER SWITCH 'S02' TO PHASE I TRANSFORMER 'T02'								
NEW UNDERGROUND CONDUIT DUCTBANK	80	FT	31.95	28.92	60.87	2,556	2,314	4,870
NEW MV FEEDER CONDUCTORS, #2, 15 KV	500	FT	20.94	16.16	37.09	10,469	8,078	18,547
CONDUCTOR TERMINATION, STRESS CONE	3	EA	188.75	96.60	285.35	566	290	856
CONDUCTOR TERMINATION, 200 AMP ELBOW	3	EA	187.50	255.08	442.58	563	765	1,328
REMOVE EXISTING MV FEEDER CONDUCTORS	500	FT	0.00	3.19	3.19	0	1,593	1,593
REMOVE EXISTING MV FEEDER CONDUIT	440	FT	0.00	6.38	6.38	0	2,809	2,809
SUBTOTAL: RECONNECT TRANSFORMER 'T02'						**$ 14,153**	**$ 15,848**	**$ 30,002**
REPLACE MV FEEDER FROM CHILLER SWITCH 'S02' TO PHASE III TRANSFORMER 'T04'								
NEW UNDERGROUND CONDUIT DUCTBANK	80	FT	31.95	28.92	60.87	2,556	2,314	4,870
NEW MV FEEDER CONDUCTORS, #2, 15 KV	650	FT	20.94	16.16	37.09	13,609	10,501	24,111
CONDUCTOR TERMINATION, 200 AMP ELBOW	3	EA	187.50	255.08	442.58	563	765	1,328
CONDUCTOR TERMINATION, STRESS CONE	3	EA	188.75	96.60	285.35	566	290	856
REMOVE EXISTING MV FEEDER CONDUCTORS	650	FT	0.00	3.19	3.19	0	2,070	2,070
REMOVE EXISTING MV FEEDER CONDUIT	450	FT	0.00	6.38	6.38	0	2,873	2,873
SUBTOTAL: RECONNECT TRANSFORMER 'T04'						**$ 17,294**	**$ 18,813**	**$ 36,107**
REPLACE MV FEEDER FROM RECREATION SWITCH 'S06' TO HEATING PLANT TRANSFORMER 'T08'								
NEW UNDERGROUND CONDUIT DUCTBANK	50	FT	31.95	28.92	60.87	1,597	1,446	3,044
NEW MV FEEDER CONDUCTORS, #2, 15 KV	900	FT	20.94	16.16	37.09	18,844	14,540	33,384
CONDUCTOR TERMINATION, 200 AMP ELBOW	3	EA	187.50	255.08	442.58	563	765	1,328
CONDUCTOR TERMINATION, STRESS CONE	3	EA	188.75	96.60	285.35	566	290	856
REMOVE EXISTING MV FEEDER CONDUCTORS	900	FT	0.00	3.19	3.19	0	2,867	2,867
SUBTOTAL: RECONNECT TRANSFORMER 'T08'						**$ 21,570**	**$ 19,908**	**$ 41,478**

ESTIMATE OF PROBABLE CONSTRUCTION COST
DIVISION 16 - ELECTRICAL WORK
THOMAS & KOLKMAN ENGINEERING CO. INC.

PROJECT: UTILITY TUNNEL DISTRIBUTION STUDY
UTAH STATE DEVELOPMENTAL CENTER
AMERICAN FORK, UTAH

☒ SCHEMATIC ☐ DESIGN DEVELOPMENT
☐ CONST. DOCUMENTS ☐ OTHER:
Prepared By: W.B. GRANDY DATE: 1/17/13

ITEM	QUANT	UNIT	UNIT COSTS MAT'L	UNIT COSTS LABOR	UNIT COSTS TOTAL	EXTENSIONS MAT'L	EXTENSIONS LABOR	EXTENSIONS TOTAL
REPLACE SECONDARY FEEDER FROM TRANSFORMER 'T02' TO PHASE I BUILDINGS								
EXCAVATE AND BACKFILL FOR UG CONDUIT	200	FT	1.31	10.80	12.11	263	2,159	2,422
NEW 4 #3/0, 1 #6 GND, 2" CONDUIT	1,100	FT	24.36	20.13	44.49	26,799	22,139	48,938
NEW 4 #500 KCM, 1 #2 GND, 4" CONDUIT	1,200	FT	82.99	33.02	116.01	99,585	39,623	139,208
REMOVE EXISTING #3/0 FEEDER CONDUCTORS	1,100	FT	0.00	1.78	1.78	0	1,959	1,959
REMOVE EXISTING #500 MCM FEEDER CONDUCTO	1,200	FT	0.00	2.75	2.75	0	3,299	3,299
REMOVE EXISTING 2" FEEDER CONDUIT	520	FT	0.00	2.16	2.16	0	1,121	1,121
REMOVE EXISTING 4" FEEDER CONDUIT	580	FT	0.00	3.29	3.29	0	1,908	1,908
SUBTOTAL: RECONNECT PHASE I SECONDARY FEEDERS						**$ 126,646**	**$ 72,208**	**$ 198,854**
REPLACE SECONDARY FEEDER FROM ELECTRICAL BUILDING TO PINERIDGE								
EXCAVATE AND BACKFILL FOR UG CONDUIT	80	FT	1.31	10.80	12.11	105	864	969
NEW 4 #350 KCM, 1 #4 GND, 4" CONDUIT	450	FT	59.28	29.80	89.08	26,677	13,410	40,087
REMOVE EXISTING #350 MCM FEEDER CONDUCTO	450	FT	0.00	2.46	2.46	0	1,107	1,107
REMOVE EXISTING 4" FEEDER CONDUIT	400	FT	0.00	3.29	3.29	0	1,316	1,316
SUBTOTAL: RECONNECT PINERIDGE SECONDARY FEEDER						**$ 26,782**	**$ 16,697**	**$ 43,479**
SUBTOTAL: ELECTRICAL WORK FOR NEW TUNNELS						**$ 245,279**	**$ 187,430**	**$ 432,783**
SUBCONTRACTOR OVERHEAD & PROFIT	**15%**							**64,917**
TOTAL: ADDITIONAL ELECTRICAL WORK FOR NEW TUNNELS								**$ 497,700**

ESTIMATE OF PROBABLE CONSTRUCTION COST
DIVISION 16 - ELECTRICAL WORK
THOMAS & KOLKMAN ENGINEERING CO. INC.

PROJECT: UTILITY TUNNEL DISTRIBUTION STUDY
UTAH STATE DEVELOPMENTAL CENTER
AMERICAN FORK, UTAH

☒ SCHEMATIC ☐ DESIGN DEVELOPMENT
☐ CONST. DOCUMENTS ☐ OTHER:
Prepared By: W.B. GRANDY DATE: 1/17/13

ITEM	QUANT	UNIT	UNIT COSTS MAT'L	UNIT COSTS LABOR	UNIT COSTS TOTAL	EXTENSIONS MAT'L	EXTENSIONS LABOR	EXTENSIONS TOTAL
ELECTRICAL DISTRIBUTION SYSTEM RECOMMENDATIONS								
EVERGREEN, MEDICAL SERVICES, THERAPY & ADMINISTRATION								
NEW 4-WAY PAD MOUNT INTERRUPTER SWITCH	1	EA	24,692.40	2,713.71	27,406.11	24,692	2,714	27,406
NEW PAD MOUNT TRANSFORMER, 750 KVA	1	EA	22,093.20	3,285.93	25,379.13	22,093	3,286	25,379
NEW UNDERGROUND CONDUIT DUCTBANK	550	FT	27.68	17.91	45.59	15,224	9,851	25,075
NEW MV FEEDER CONDUCTORS, #2, 15 KV	30	FT	18.14	10.01	28.15	544	300	844
NEW MV FEEDER CONDUCTORS, #1/0, 15 KV	1,050	FT	21.39	12.62	34.01	22,459	13,252	35,711
CONDUCTOR TERMINATION, STRESS CONE	3	EA	163.53	59.82	223.36	491	179	670
CONDUCTOR TERMINATION, 600 AMP ELBOW	3	EA	232.85	197.46	430.30	699	592	1,291
CONDUCTOR TERMINATION, 200 AMP ELBOW	6	EA	162.45	157.97	320.42	975	948	1,923
NEW DISTRIBUTION SWITCHBOARD, 2500 AMP	1	EA	41,045.70	3,529.21	44,574.91	41,046	3,529	44,575
NEW SECONDARY SERVICE FEEDER, 2500 AMP	40	FT	352.62	106.40	459.02	14,105	4,256	18,361
NEW SECONDARY FEEDER, 600 AMP	400	FT	86.32	22.61	108.93	34,526	9,045	43,571
NEW SECONDARY FEEDER, 800 AMP	200	FT	115.37	25.61	140.98	23,074	5,122	28,197
NEW SECONDARY FEEDER, 1200 AMP	400	FT	168.30	40.80	209.10	67,319	16,320	83,640
DEMO EVERGREEN XFMR VAULT	1	LOT	315.15	4,647.99	4,963.14	315	4,648	4,963
REMOVE THERAPY TRANSFORMER 'T12'	1	EA	103.97	572.22	676.19	104	572	676
REMOVE ADMINISTRATION TRANSFORMER 'T13'	1	EA	78.79	1,391.54	1,470.32	79	1,392	1,470
REMOVE EXISTING MV FEEDER CONDUCTORS	1,320	FT	0.00	1.97	1.97	0	2,604	2,604
REMOVE EXISTING MV FEEDER CONDUIT	130	FT	0.00	3.95	3.95	0	514	514
REMOVE THERAPY SECONDARY SERVICE FEEDER	100	FT	0.00	3.79	3.79	0	379	379
REMOVE ADMIN SECONDARY SERVICE FEEDER	90	FT	0.00	10.35	10.35	0	932	932
REPLACE EVERGREEN GENERATOR FEEDER	60	FT	39.85	13.80	53.66	2,391	828	3,219
SUBTOTAL: EVERGREEN						**$ 270,136**	**$ 81,264**	**$ 351,399**
RECREATION ELECTRICAL VAULT								
NEW 6-WAY PAD MOUNT INTERRUPTER SWITCH	1	EA	38,554.80	3,030.17	41,584.97	38,555	3,030	41,585
NEW UNDERGROUND CONDUIT DUCTBANK	300	FT	27.68	17.91	45.59	8,304	5,373	13,677
NEW MV FEEDER CONDUCTORS, #2, 15 KV	450	FT	18.14	10.01	28.15	8,163	4,502	12,665
NEW MV FEEDER CONDUCTORS, #1/0, 15 KV	300	FT	21.39	12.62	34.01	6,417	3,786	10,203
CONDUCTOR TERMINATION, 600 AMP ELBOW	6	EA	232.85	197.46	430.30	1,397	1,185	2,582
CONDUCTOR TERMINATION, 200 AMP ELBOW	3	EA	162.45	157.97	320.42	487	474	961
REMOVE EXISTING MV FEEDER CONDUCTORS	750	FT	0.00	1.97	1.97	0	1,479	1,479
REMOVE EXISTING MV FEEDER CONDUIT	120	FT	0.00	3.95	3.95	0	474	474
SUBTOTAL: RECREATION ELECTRICAL VAULT						**$ 63,323**	**$ 20,305**	**$ 83,628**
DIVISION OF CHILD AND FAMILY SERVICES								
NEW 3-WAY PAD MOUNT INTERRUPTER SWITCH	1	EA	16,786.50	2,900.12	19,686.62	16,787	2,900	19,687
NEW PAD MOUNT TRANSFORMER, 150 KVA	1	EA	9,286.73	1,958.55	11,245.28	9,287	1,959	11,245
NEW UNDERGROUND CONDUIT DUCTBANK	900	FT	27.68	17.91	45.59	24,912	16,120	41,032
NEW MV FEEDER CONDUCTORS, #2, 15 KV	30	FT	18.14	10.01	28.15	544	300	844
NEW MV FEEDER CONDUCTORS, #1/0, 15 KV	900	FT	21.39	12.62	34.01	19,250	11,359	30,610
CONDUCTOR TERMINATION, 200 AMP ELBOW	6	EA	162.45	157.97	320.42	975	948	1,923
CONDUCTOR TERMINATION, 600 AMP ELBOW	6	EA	232.85	197.46	430.30	1,397	1,185	2,582
NEW SECONDARY SERVICE FEEDER, 500 AMP	90	FT	59.48	21.31	80.79	5,353	1,918	7,271
REMOVE EXISTING MV FEEDER CONDUCTORS	520	FT	0.00	1.97	1.97	0	1,026	1,026
REMOVE EXISTING MV FEEDER CONDUIT	120	FT	0.00	3.95	3.95	0	474	474
DEMO DCFS TRANSFORMER VAULT	1	LOT	136.46	2,029.65	2,166.11	136	2,030	2,166
SUBTOTAL: DIVISION OF CHILD AND FAMILY SERVICES						**$ 78,641**	**$ 40,218**	**$ 118,859**

ESTIMATE OF PROBABLE CONSTRUCTION COST
DIVISION 16 - ELECTRICAL WORK
THOMAS & KOLKMAN ENGINEERING CO. INC.

PROJECT: UTILITY TUNNEL DISTRIBUTION STUDY
UTAH STATE DEVELOPMENTAL CENTER
AMERICAN FORK, UTAH

☒ SCHEMATIC ☐ DESIGN DEVELOPMENT
☐ CONST. DOCUMENTS ☐ OTHER:
Prepared By: W.B. GRANDY DATE: 1/17/13

ITEM	QUANT	UNIT	UNIT COSTS MAT'L	UNIT COSTS LABOR	UNIT COSTS TOTAL	EXTENSIONS MAT'L	EXTENSIONS LABOR	EXTENSIONS TOTAL
ELECTRICAL BUILDING								
NEW PAD MOUNT TRANSFORMER, 750 KVA	1	EA	22,093.20	3,285.93	25,379.13	22,093	3,286	25,379
NEW PAD MOUNT TRANSFORMER, 112.5 KVA	1	EA	6,965.04	1,468.91	8,433.96	6,965	1,469	8,434
NEW UNDERGROUND CONDUIT DUCTBANK	120	FT	27.68	17.91	45.59	3,322	2,149	5,471
NEW MV FEEDER CONDUCTORS, #2, 15 KV	120	FT	18.14	10.01	28.15	2,177	1,201	3,377
CONDUCTOR TERMINATION, 200 AMP ELBOW	12	EA	162.45	157.97	320.42	1,949	1,896	3,845
NEW DISTRIBUTION SWITCHBOARD, 2000 AMP	1	EA	29,132.70	3,376.10	32,508.80	29,133	3,376	32,509
NEW SECONDARY SERVICE FEEDER, 2000 AMP	50	FT	377.43	84.79	462.22	18,871	4,240	23,111
RECONNECT EXISTING SECONDARY FEEDERS	1	LOT	6,779.15	2,974.16	9,753.30	6,779	2,974	9,753
NEW SERVICE DISCONNECT, 200 AMP, (WELL PUM	1	EA	1,028.85	264.44	1,293.29	1,029	264	1,293
NEW SECONDARY SERVICE FEEDER, 200 AMP	50	FT	19.20	8.09	27.29	960	404	1,364
DEMO ELECTRICAL BLDG TRANSFORMER VAULT	1	LOT	242.05	4,023.75	4,265.80	242	4,024	4,266
REMOVE EXISTING MV FEEDER CONDUCTORS	50	FT	0.00	1.97	1.97	0	99	99
REPLACE EXISTING SURGE ARRESTERS WITH 9 K\	3	EA	216.60	197.46	414.06	650	592	1,242
SUBTOTAL: ELECTRICAL BUILDING						**$ 94,170**	**$ 25,974**	**$ 120,144**
OVERHEAD POWER LINE								
NEW SINGLE PHASE MV FEEDER, UNDERGROUND	1,900	FT	19.79	12.57	32.36	37,606	23,887	61,493
CONDUCTOR TERMINATION, 200 AMP ELBOW	2	EA	162.45	157.97	320.42	325	316	641
RECONNECT SPRINKLER CONTROLLERS	1	LOT	176.75	265.82	442.57	177	266	443
REMOVE POLE MOUNT TRANSFORMER	1	EA	80.14	443.90	524.05	80	444	524
REMOVE OVERHEAD LINE CONDUCTORS	1,750	FT	1.14	0.75	1.89	1,994	1,311	3,305
REMOVE EXISTING MV FEEDER CONDUCTORS	130	FT	0.00	1.97	1.97	0	256	256
REMOVE EXISTING MV FEEDER CONDUIT	60	FT	0.00	3.95	3.95	0	237	237
REMOVE ABANDONED POWER POLES	10	EA	136.73	258.80	395.53	1,367	2,588	3,955
SUBTOTAL: OVERHEAD POWER LINE						**$ 41,549**	**$ 29,305**	**$ 70,854**
CHILLER BUILDING								
REMOVE PAD MOUNT TRANSFORMER, 750 KVA	1	EA	105.59	1,994.10	2,099.69	106	1,994	2,100
REMOVE EXISTING MV FEEDER CONDUCTORS	30	FT	0.00	1.97	1.97	0	59	59
NEW PAD MOUNT TRANSFORMER, 750 KVA	1	EA	22,093.20	3,285.93	25,379.13	22,093	3,286	25,379
NEW MV FEEDER CONDUCTORS, #1/0, 15 KV	30	EA	21.39	12.62	34.01	642	379	1,020
CONDUCTOR TERMINATION, 200 AMP ELBOW	3	FT	162.45	157.97	320.42	487	474	961
CONDUCTOR TERMINATION, 600 AMP ELBOW	3	FT	232.85	197.46	430.30	699	592	1,291
REPLACE EXISTING SURGE ARRESTERS WITH 9 K\	3	EA	216.60	197.46	414.06	650	592	1,242
SUBTOTAL: CHILLER BUILDING						**$ 24,676**	**$ 7,377**	**$ 32,053**
PHASE I BUILDINGS								
REMOVE PAD MOUNT TRANSFORMER, 750 KVA	1	EA	105.59	1,994.10	2,099.69	106	1,994	2,100
NEW PAD MOUNT TRANSFORMER, 750 KVA	1	EA	22,093.20	3,285.93	25,379.13	22,093	3,286	25,379
NOTE: PRIMARY FEEDER REPLACEMENT IS INLCUDED WITH ADDITIONAL ELECTRICAL WORK FOR NEW TUNNELS.								
SUBTOTAL: PHASE I BUILDINGS						**$ 22,199**	**$ 5,280**	**$ 27,479**
PHASE II BUILDINGS								
REMOVE PAD MOUNT TRANSFORMER, 750 KVA	1	EA	105.59	1,994.10	2,099.69	106	1,994	2,100
REMOVE EXISTING MV FEEDER CONDUCTORS	380	FT	0.00	1.97	1.97	0	750	750
NEW PAD MOUNT TRANSFORMER, 750 KVA	1	EA	22,093.20	3,285.93	25,379.13	22,093	3,286	25,379
NEW MV FEEDER CONDUCTORS, #2, 15 KV	380	FT	18.14	10.01	28.15	6,893	3,802	10,695
CONDUCTOR TERMINATION, 200 AMP ELBOW	6	EA	162.45	157.97	320.42	975	948	1,923
SUBTOTAL: PHASE II BUILDINGS						**$ 30,067**	**$ 10,779**	**$ 40,846**

ESTIMATE OF PROBABLE CONSTRUCTION COST
DIVISION 16 - ELECTRICAL WORK
THOMAS & KOLKMAN ENGINEERING CO. INC.

PROJECT: UTILITY TUNNEL DISTRIBUTION STUDY
UTAH STATE DEVELOPMENTAL CENTER
AMERICAN FORK, UTAH

☒ SCHEMATIC ☐ DESIGN DEVELOPMENT
☐ CONST. DOCUMENTS ☐ OTHER:
Prepared By: W.B. GRANDY DATE: 1/17/13

ITEM	QUANT	UNIT	UNIT COSTS MAT'L	UNIT COSTS LABOR	UNIT COSTS TOTAL	EXTENSIONS MAT'L	EXTENSIONS LABOR	EXTENSIONS TOTAL
PHASE III BUILDINGS								
REMOVE PAD MOUNT TRANSFORMER, 500 KVA	1	EA	96.39	1,491.24	1,587.63	96	1,491	1,588
NEW PAD MOUNT TRANSFORMER, 500 KVA	1	EA	18,627.60	3,186.23	21,813.83	18,628	3,186	21,814
NOTE: PRIMARY FEEDER REPLACEMENT IS INLCUDED WITH ADDITIONAL ELECTRICAL WORK FOR NEW TUNNELS.								
SUBTOTAL: PHASE III BUILDINGS						**$ 18,724**	**$ 4,677**	**$ 23,401**
MAINTENANCE (LAUNDRY) BUILDING								
REMOVE PAD MOUNT TRANSFORMER, 500 KVA	1	EA	96.39	1,491.24	1,587.63	96	1,491	1,588
REMOVE EXISTING MV FEEDER CONDUCTORS	350	FT	0.00	1.97	1.97	0	690	690
NEW PAD MOUNT TRANSFORMER, 500 KVA	1	EA	18,627.60	3,186.23	21,813.83	18,628	3,186	21,814
NEW MV FEEDER CONDUCTORS, #2, 15 KV	350	EA	18.14	10.01	28.15	6,349	3,502	9,851
CONDUCTOR TERMINATION, 200 AMP ELBOW	6	FT	162.45	157.97	320.42	975	948	1,923
SUBTOTAL: MAINTENANCE BUILDING						**$ 26,048**	**$ 9,817**	**$ 35,865**
AUDITORIUM								
REPLACE EXISTING SURGE ARRESTERS WITH 9 K\	3	EA	216.60	197.46	414.06	650	592	1,242
SUBTOTAL: AUDITORIUM						**$ 650**	**$ 592**	**$ 1,242**
HEATING PLANT								
REPLACE EXISTING SURGE ARRESTERS WITH 9 K\	3	EA	216.60	197.46	414.06	650	592	1,242
SUBTOTAL: HEATING PLANT						**$ 650**	**$ 592**	**$ 1,242**
SUBTOTAL: DISTRIBUTION SYSTEM RECOMMENDATIONS						**$ 670,832**	**$ 236,181**	**$ 907,013**
SUBCONTRACTOR OVERHEAD & PROFIT	**15%**							**136,052**
TOTAL: ELECTRICAL DISTRIBUTION SYSTEM RECOMMENDATIONS								**$ 1,043,065**

G&W

G&W ELECTRIC CO.

August 1, 1983

Gentlemen:

Our records indicate that your company had purchased one or more of the "RA" style oil switches supplied by G&W over the past 60 years.

G&W introduced its first oil filled load interrupting switch in the 1920's. In the period since that time thousands of these switches have given satisfactory service throughout the United States and around the world. These early designs were completely manually operated. In other words, they depended upon the skill of the operator for satisfactory operation. They successfully interrupted transformer magnetizing current, charging current and load current up through 400 amperes. They withstood momentary currents up through 20,000 amperes asymmetrical. They did not have an assigned close into fault rating.

Compression spring charged switches, first introduced in the 1960's, have a close into fault rating in addition to greater current carrying, load interrupting and momentary withstand ratings.

This increase in performance rating derives from the fact that the spring charged mechanism reduces the skill required of operating personnel. The switch contacts move at a fixed velocity and force regardless of the manual input to the handle. Further design enhancements have made the sectionalizing devices manufactured by G&W Electric Company today the safest to operate and easiest to maintain of any in the industry.

In light of the experience gained through 60 years of building and servicing oil filled switchgear, G&W recommends you take the following steps:

1. Replace all "RA" style manual transfer switches on your system with modern switches (such as G&W's RA20, RA32, RA40, MR, IFLDR, PMO, LDR) that utilize a spring-assisted operator.

2. Establish a maintenance program for all oil filled switchgear that will ensure safe operation and long service life.

3. Until such time as your replacement program is completed, operate all "RA" style switches on your system with the correct remote operation tool. Catalog and pricing data, as well as operating instructions are included with this mailing.

4. Contact your local sales representative in order to obtain Caution labels specifically designed for the "RA" style switches. Recommending remote operation of these switches, the labels should be applied to each "RA" switch on your system.

Additional information on this important and timely subject can be obtained from your local G&W sales representative (noted below) or from G&W's Marketing Service Department.

Please complete and return the enclosed Reply Card informing us of the correct name and title of the person we should contact with future mailings on this subject.

Sincerely yours,

R. F. McCrae
Vice President Marketing

3500 WEST 127TH STREET, BLUE ISLAND, IL USA 60406-1864 312/388-5010 TELEX 254402 FAX 312/388-0755

G&W

G&W ELECTRIC CO.

July 10, 1985

Gentlemen:

In August of 1983, we wrote to you recommending replacement of "RA" style manual transfer switches (see letter attached). We are once again writing to you because some users have not followed our recommendation. We have further found that a few users have been negligent in the maintenance of an "RA" style switch and have not properly trained or supervised their personnel regarding the operation of this type of switch. The results have been failures that have caused serious injuries and, in some cases, fatalities. This situation is causing not only substantial and unnecessary human suffering, but also financial burdens to G&W and our valued customers.

We again strongly recommend that you immediately take the following steps:

1. Replace all "RA" style manual switches on your system with switches that utilize a spring-assisted operator. (Note that "RA" style manual switches do not have a close into fault rating. G&W style RA20, RA32, and RA40 have close into fault ratings of 20KA, 32KA and 40KA respectively.)

2. Establish and follow a maintenance program for all oil-filled switchgear in accordance with the manufacturer's recommendations.

3. Operate all "RA" style switches remotely.

4. Immediately instruct or reinstruct all personnel regarding the proper method to operate an "RA" switch and the dangers involved in misusing the switch. These instructions must specifically include the following procedures:

   a) Do not remove the groundstop. This is a safety device that prevents a switch from accidentally being thrown into the wrong position.

   b) Switches must never be "teased" in and out of a live circuit.

   c) The direction of the throw must never be reversed. In the event of an accidental closing into a fault, operators must be instructed to leave the handle in position and exit the area immediately due to possible reclosing operations by other circuit protective devices. We also recommend that reclosing devices be locked out during any switching operation.

3500 WEST 127TH STREET, BLUE ISLAND, IL USA 60406-1864 312/388-5010 TELEX 254402 FAX 312/388-0755

d) Operators must be instructed **not** to hold the position pin while throwing the switch. The proper way to throw the switch, in accordance with the original operating instructions, is to pull the position pin out of the hole, move the handle slightly to clear the hold, **release** the position pin, and move the switch handle into the desired position with a sure, uninterrupted motion. The position pin will automatically fall into the next hole and prevent the handle from moving further.

We are enclosing copies of operating and maintenance instructions and information regarding remote operations. Further information regarding replacement of "RA" style switches and remote operating devices may be obtained from your local representatives listed below.

Sincerely,

J. D. Mueller
President

Enclosures:

G&W letter of August 1, 1983
Catalog Supplement No. GW20-CS7
Installation Instruction GWI 506-27 of August, 1983

G&W

G&W ELECTRIC CO.

March 21, 1997

Dear G&W Electric Oil Insulated Switch User:

Over two decades ago, the G&W Electric Co. began to produce loadbreak switches insulated in SF_6 gas. This technology revolutionized the industry, offering higher ratings, reduced maintenance, and a non-combustible more environmentally friendly dielectric.

Since that time, we have continuously expanded our product offering to the point that we now provide a complete range of gas insulated switches and fault interrupters that can functionally replace virtually all oil insulated switches currently in use.

During this same period of time, we have taken a number of significant steps, with increasing urgency, to encourage our customers to convert to this superior technology and remove their oil insulated devices from their system.

- In 1983, and again in 1985, we strongly recommended non-spring assisted designs be removed from service. (See attached copies.)
- We discontinued production of all oil switch designs completely in 1991.
- We no longer provide parts, service, or support for any oil insulated device. This includes all RA style switches, fused switches, oil fused cutouts, and any other oil insulated switch.

We have taken these steps because the safe distribution of electricity, especially at high voltages, requires the finest equipment available. We believe that SF_6 gas is in every way the superior dielectric for these applications.

The environmental issues surrounding oil, PCBs, and the accidental discharge of oil are well known to the industry and the world as a whole. Recently, a U.S. utility had an oil filled distribution voltage device fail catastrophically, releasing a nominal quantity of oil into the surrounding area. The total cost of its cleanup exceeded one million dollars.

The 1994 edition of the National Electric Safety Code specifically addresses the subject of

3500 WEST 127TH STREET, BLUE ISLAND, IL USA 60406-1864 • 708/388-5010 • FAX 708/388-0755

switches containing "Flammable Dielectrics". It requires segregation of an oil insulated switch from all other equipment and buildings, and an absorption bed or similar device to control oil that could be discharged by tank rupture. Also, the entire room housing the switch must be of fire resistant construction.

The most important issue of all is operator safety. Every oil insulated switching device was designed for loadbreak only when properly maintained, including yearly dielectric checks for carbon and moisture. Although these requirements for operation were published and provided with every switch, many owners have ignored or were unaware of these requirements, creating a dangerous situation.

Sadly, oil insulated switches continue to cause unnecessary human suffering and even fatalities because the owners have neglected to take remedial action.

In summary, we strongly recommend deenergization and removal of these switching devices. We are available to review the specific requirements of your applications, and work with you, using our vast library of thousands of designs, to provide you with the most technically sound, economical, and safest possible system solution.

Sincerely,

John H. Mueller
President

SF_6 Emission Reduction Partnership for Electric Power Systems

2010 Annual Report

December 2011

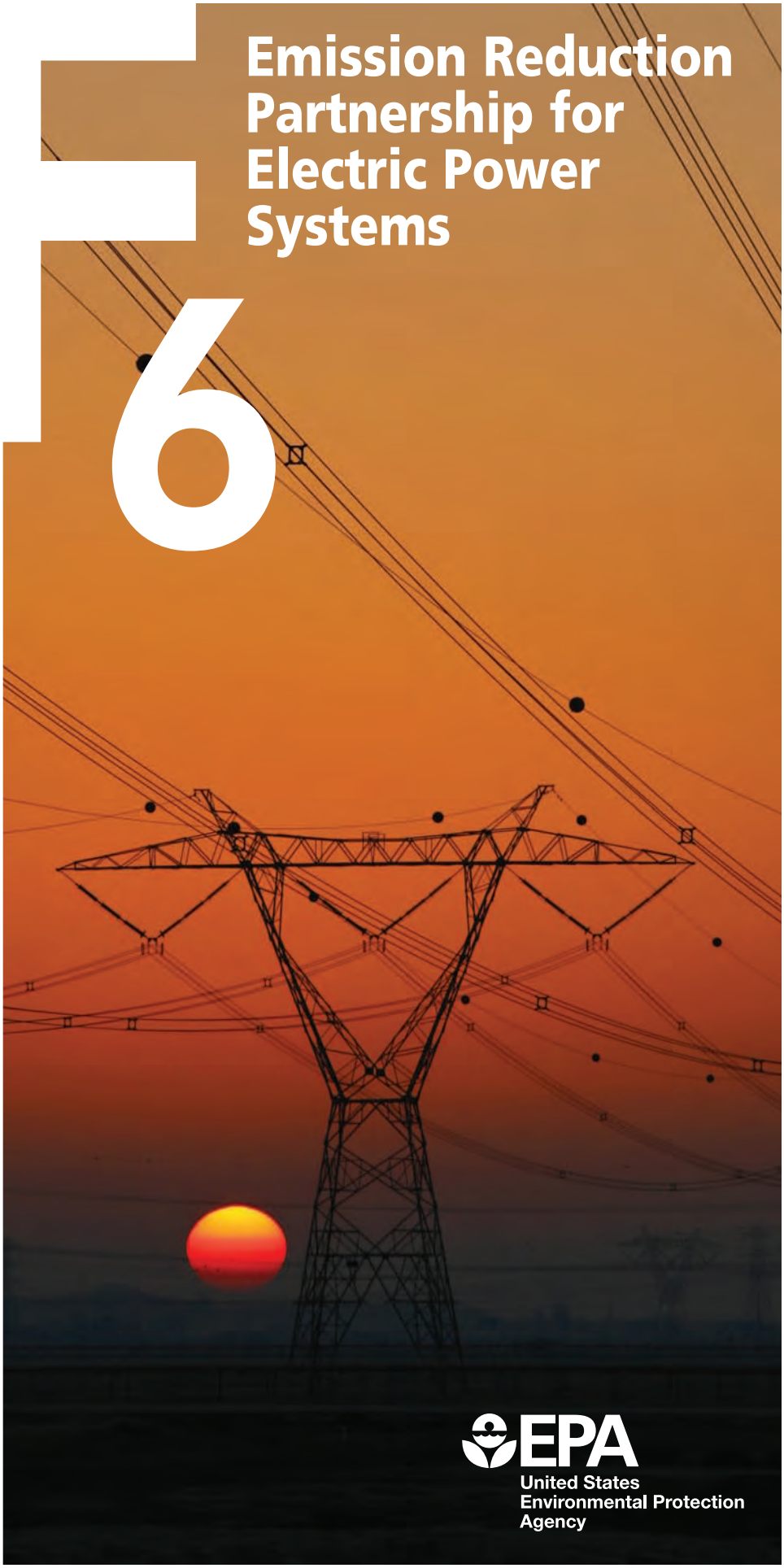

SF_6 Emission Reduction Partnership for Electric Power Systems

EPA
United States Environmental Protection Agency

1999

Inception of the "Partnership" with 49 Charter Partners.

2000

1st International Conference on SF_6 and the Environment held in San Diego, CA.

2001–2003

Technical literature developed and made available on program web site including, "Byproducts of SF_6 Use in the Electric Power Industry" and "Catalog of Guidelines and Standards for the Handling and Management of SF_6."

2nd International Conference on SF_6 and the Environment held in San Diego, CA in 2002.

2004

3rd International Conference on SF_6 and the Environment held in Scottsdale, AZ (substation tour).

Partners start receiving customized benchmark reports on their progress in the program. Service Provider directory made available.

2005

Webcast tutorials on estimating and reporting SF_6 emissions offered. Field study on leak rates from circuit breakers manufactured between January 1998 and December 2002 is completed.

2006

4th International Conference on SF_6 and the Environment held in San Antonio, TX (substation tour). Partnership participation increases to 77 companies representing 42% of U.S. grid.

2007-2009

The SF_6 emission rate continues to drop; by 2007, Partners have reduced SF_6 emissions by more than half of baseline emissions. In 2009, the Partnership celebrates it 10 year anniversary at the 5th Workshop in Phoenix, AZ. Partners convene at a Partner Meeting in Chicago in June 2009, hosted by Partner utility ComEd.

2010

The lowest SF_6 emission rate of the program to-date, 3.8% is set. Partner utility Oncor hosts Partner Meeting in May in Dallas, Texas.

The SF_6 Emission Reduction Partnership for Electric Power Systems

In 1999, members of the U.S. electric power industry and the U.S. Environmental Protection Agency (EPA) collaborated to establish the SF_6 Emission Reduction Partnership for Electric Power Systems (the Partnership). Partner utilities voluntarily commit to reduce emissions of sulfur hexafluoride, or SF_6, a potent and long-lived greenhouse gas with a global warming potential (GWP) 23,900 times that of carbon dioxide (CO_2).[1] This means that SF_6 is 23,900 times more effective at trapping infrared radiation than an equivalent amount of CO_2 over a 100-year period. Greenhouse gases range in their potency, and SF_6 is classified as the highest GWP gas. Although SF_6 is emitted in smaller quantities than many other greenhouse gases, its extremely long atmospheric lifetime of 3,200 years causes it to accumulate in the earth's atmosphere for several millenia.

Because of its unique dielectric properties, electric utilities rely on SF_6 in electric power system for high voltage electrical insulation, current interruption and arc quenching in the transmission and distribution of electricity. While SF_6 should theoretically remain contained within pressurized equipment, in reality, the gas is inadvertently emitted into the atmosphere as leaks develop during various stages of the equipment's lifecycle. SF_6 can also be released at the time of equipment manufacture installation, servicing, or decommissioning. Because there is no clear alternative to SF_6, Partners reduce their greenhouse gas emissions through implementing emission reduction strategies such as detecting, repairing and/or replacing problem equipment, as well as educating gas handlers on proper handling techniques of SF_6 gas during equipment installation, servicing, and disposal. This Partnership fosters information sharing of these management practices and is one of EPA's voluntary public-private partnerships aimed at reducing or slowing the growth of greenhouse gas emissions. This report presents the SF_6 emission reduction achievements of the Partnership through 2010.

Inside the 2010 SF_6 Emissions Reduction Partnership Annual Report

- Partner Accomplishments 2010 2
- SF_6 Emissions Rate Trends 2
- Partnership Spotlight 5
- Meetings and Workshops 6
- Mandatory Reporting of Greenhouse Gases Rule 7
- Continued Growth, Success and Future of the Partnership 8
- Updated List of Partners 9

[1] 2001 IPCC Third Assessment Report.

Partner Accomplishments

As part of their commitment to the Partnership, each year Partners voluntarily report their SF_6 emissions and nameplate capacity estimates to EPA. EPA collects and aggregates this information to determine the overall accomplishments of the Partnership.

Partner-Reported Emissions Summary

The Partnership's annual average SF_6 emission rate, the ratio of SF_6 emissions relative to total SF_6 nameplate capacity (i.e., the total quantity of SF_6 contained in electrical equipment), is a benchmark metric by which achievements of the Partnership are tracked. As illustrated in Figure 1, the annual average SF_6 emission rate of Partners has decreased significantly since 1999. The Partnership's annual average emission rate reached 3.8% in 2010. Overall, the annual average SF_6 emission rate for the Partnership is down 73 percent from the 1999 baseline emission rate of 14.2 percent.

Table 1 summarizes the Partnership's aggregate SF_6 emissions, nameplate capacity, and emission rate for the 1999 to 2010 reporting years.[1] From 2009 to 2010, total SF_6 emissions decreased to approximately 270,500 pounds, while the Partnership nameplate capacity increased to approximately 7,066,000 pounds. Both of these changes led to an overall decrease in the annual average Partnership SF_6 emission rate. A summary of the Partnership's SF_6 emissions and reductions are presented in Table 2. The

[1] Trends across years should be evaluated using the SF_6 emission rate, rather than SF_6 emissions. The SF_6 emission rate is a valuable assessment of Partnership trends because it allows for a normalized comparison. While Partners vary in total SF_6 nameplate capacity, a larger utility, although using more SF_6, will not necessarily have a higher emission rate than a smaller utility.

*Figure 1: **SF_6 Emission Rate Trends***

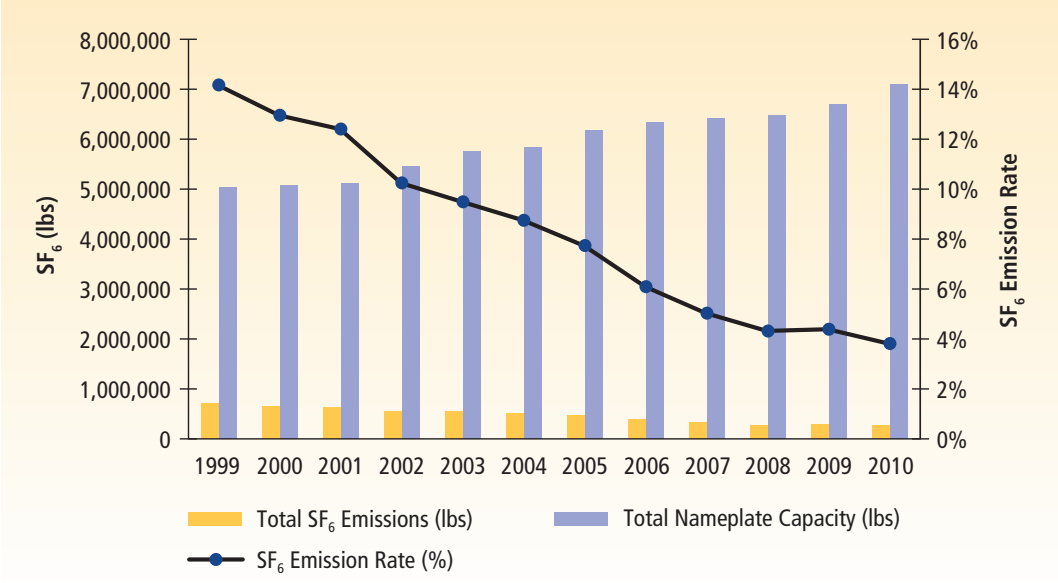

SF_6 emission reductions, presented in terms of pounds of SF_6 and million metric tons of carbon dioxide equivalent ($MMTCO_2e$), were calculated using a baseline year of 1999.

To date, Partners have decreased absolute emissions of SF_6 by 62 percent. Annual SF_6 reductions collectively made by Partners from 2009 to 2010 were approximately 23,900 pounds, or the CO_2 equivalent of 0.26 million metric tons ($MMTCO_2E$). From 1999 through 2010, Partnership emissions reductions totaled close to a cumulative of 2.9 million pounds of SF_6 or 31.4 $MMTCO_2E$ (i.e., based on the sum of "Reduction from Baseline" as provided in Row 3, Table 2). If the Partnership's SF_6 emission rate of 14 percent remained unchanged since 1999, then the total amount of emissions

Estimation Methods

The results presented in Table 1 are based on the estimated 1999-2010 time series data for all current Partners, including those Partners that joined after 1999. Extrapolation and interpolation techniques were used to estimate emissions and nameplate capacity for years in which a current Partner had not reported data. For example, if a Partner provided a report for 2007 and 2009 but not for 2008, a 2008 estimate was determined through linear interpolation.

TABLE 1: **Summary of Partnership SF_6 Emissions, Nameplate Capacity, and Emission Rate**

	1999	2000	2001	2002	2003	2004	2005	2006	2007	2008	2009	2010
Total SF_6 Emissions (lbs)	712,454	657,978	635,746	559,314	547,354	510,772	477,920	386,042	323,033	280,460	294,349	270,484
Total Nameplate Capacity (lbs)	5,028,383	5,077,010	5,123,614	5,456,496	5,762,347	5,835,407	6,175,679	6,333,518	6,415,440	6,485,296	6,700,731	7,065,999
SF_6 Emission Rate (%)[a]	14.2%	13.0%	12.4%	10.3%	9.5%	8.8%	7.7%	6.1%	5.0%	4.3%	4.4%	3.8%

Note: Historical estimates have been updated based on the estimation methodology used by EPA and data made available by Partners.

[a] Emission rate is defined as total emissions divided by total nameplate capacity (i.e., the total quantity of SF_6 contained in electrical equipment).

TABLE 2: **Summary of Absolute Partnership SF_6 Emission Reductions**

	1999[a]	2000	2001	2002	2003	2004	2005	2006	2007	2008	2009	2010
Total Partner-Reported SF_6 Emissions (lbs)	712,454	657,978	635,746	559,314	547,354	510,772	477,920	386,042	323,033	280,460	294,349	270,484
Total Partner-Reported SF_6 Emissions ($MMTCO_2e$)	7.72	7.13	6.89	6.06	5.93	5.54	5.18	4.18	3.50	3.04	3.19	2.93
Reduction from 1999 Baseline (lbs)		54,476	76,708	153,140	165,100	201,682	234,535	326,412	389,421	431,994	418,106	441,970
Reduction from 1999 Baseline ($MMTCO_2e$)		0.59	0.83	1.66	1.79	2.19	2.54	3.54	4.22	4.68	4.53	4.79
Percent Reduction from 1999 Baseline		**7.6%**	**10.8%**	**21.5%**	**23.2%**	**28.3%**	**32.9%**	**45.8%**	**54.7%**	**60.6%**	**58.7%**	**62.0%**

Note: Historical estimates have been updated based on the estimation methodology used by EPA and data made available by Partners.

[a] Baseline year.

Cumulative SF_6 emissions reductions of 2,893,500 pounds relative to the 1999 baseline are equivalent to CO_2 emissions reductions from:

- **6 million** passenger cars not driven for one year
- **73 million** barrels of oil not used
- **8 million** households reducing electricity use by 50 percent for one year

Because SF_6 has an atmospheric lifetime of 3,200 years, the benefits of reducing emissions accrue for many generations.

Source: http://www.epa.gov/cleanenergy/energy-resources/calculator.html

emitted to the atmosphere since 1999 would be 4.5 million pounds greater than has actually occurred.

Figure 2 displays the distribution of Partners according to their emission rate. As illustrated, nearly 70 percent of Partners are below an emission rate of 5 percent, and half of all Partners have achieved an emission rate of 2.5 percent or less. Emission rates of Partners vary due to a number of factors such as total nameplate capacity within their system, transmission miles, age and geographic location of equipment, and the number of years participating in the Partnership.

*Figure 2: **SF_6 Emission Rate Trends***

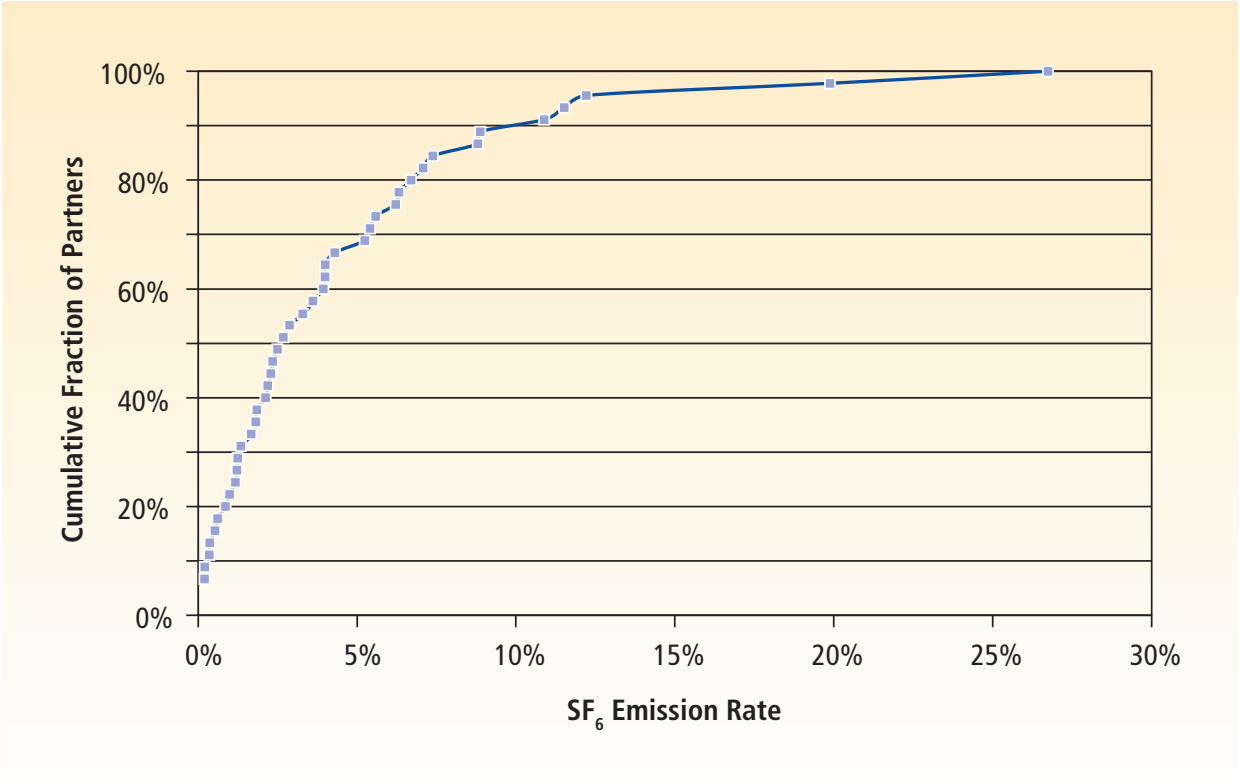

Partner Spotlights

Partners that are involved in the EPA SF_6 Partnership are leaders in their industry in efforts to reduce SF_6 emissions.

Partners are actively seeking opportunities to improve the management and tracking of their cylinder inventories, maximizing recycling, and continually training personnel on responsible handling of SF_6 in the field. Another key action is prioritizing equipment repair and replacing equipment with major leaks as they see the financial benefit in such an investment (i.e., improved system reliability and of the avoided cost to replace gas lost to the atmosphere), in addition to environmental benefits. Partners are also gathering at Partnership events to exchange information and learn from one another.

MidAmerican Energy

MidAmerican Energy, a subsidiary of MidAmerican Energy Holdings Company, is Iowa's largest energy company. MidAmerican Energy provides service to customers in a 10,600 square mile area in Iowa, Illinois, South Dakota and Nebraska.

Since joining the Partnership in 2004, MidAmerican Energy Company has successfully reduced its SF_6 emissions rate from 17.1 percent to 5.6 percent. The cumulative reduction of SF_6 emissions is equivalent to the avoidance of more than 276 metric tons of CO_2e, or an estimated 54,300 passenger cars not driven for a full year. MidAmerican Energy's success can be attributed to a comprehensive reduction plan that includes the establishment of an SF_6 program; employee training regarding the environmental effects of SF_6 gas; an SF_6 manual featuring proper gas handling procedures; equipment utilization; tracking of leaking equipment; and replacement of any identified leaking equipment. In 2010, MidAmerican Energy replaced a leaking 345kV circuit breaker, which supported its emission reduction efforts.

National Grid

National Grid is an international electricity and gas company and is one of the largest investor-own energy companies in the world. In the United States, National Grid provides service to millions of customers throughout the Northeast.

National Grid joined the Partnership in 2003. During its time in the program, it has effectively reduced SF_6 emissions by 63 percent, reporting a SF_6 emission rate of 2.3 percent for 2010. National Grid's cumulative reduction is equivalent to 204 metric tons of CO_2e, or an estimated 40,000 passenger cars not driven for one year. SF_6 leak repairs, SF_6 equipment replacements, and improved reporting procedures were key to their success in 2010.

Partnership Announcements and Updates

This section covers updates on outreach events, the latest developments in the Greenhouse Gas Reporting Program, and New Partners to the program.

Workshop on SF_6 Emission Reduction Strategies, April 17-18, 2012

The SF_6 Emission Reduction Partnership for Electric Power Systems will be hosting another two-day Workshop on April 17 and 18 of 2012. EPA is pleased to announce that Partner utility Southern Company has offered to host the workshop, which will take place in Atlanta, Georgia at the Georgia Power Company Headquarters.

Similar to the last workshop, held in 2009 in Phoenix, Arizona, this workshop will bring together between 100-150 participants from Partner utilities, service providers, gas producers and distributors, and equipment manufacturers. Sessions will cover a climate change policy update, SF_6 emission reduction strategies, and managing and tracking SF_6 Inventories. EPA is welcoming sponsors and will offer a room for exhibitors. The workshop will end with a site tour from our Partner host, Southern Company.

More information will be made available through email announcements and updates to the Partnership's web site (www.epa.gov/electricpower-sf6).

2010 Partner Meeting: Dallas, TX

On May 13-14, 2010, the Partnership conducted a Partners-only meeting held in Dallas, Texas to discuss best practices for SF_6 inventories and emission reductions. The meeting also discussed new developments in climate change policy. The meeting was to facilitate the exchange of information relevant to improving SF_6 emission estimates and reducing SF_6 emissions in the context of the recent developments in climate policy. Roundtable discussions were held, allowing an open forum for Partners in attendance to discuss improving SF_6 emission and nameplate capacity estimates, best management practices, and mitigation strategies for SF_6 emission reductions and the future of the SF_6 Partnership.

Close to 40 attendees with representatives from 18 Partner companies participated in the meeting. The host of the event, SF_6 Partner Oncor, shared their facilities and provided meeting participants a site tour of their Parkdale facility, which consists of 14 SF_6 gas breakers and seven oil breakers hung off of two 138kV buses. Co-located on the property is Oncor's Static Var Compensator (SVC), the largest and fastest SVC in the world.

EPA would like to specially recognize and thank Partner utility, Oncor. This successful meeting would not have been possible without the hard work and hospitality of the Oncor staff.

2012 Partner Recognition Nominate Your Company!

EPA will be presenting certificates to selected Partners, recognizing their efforts to reduce SF_6 emissions. If you would like to nominate your company for this special recognition, please email the Program Manager a brief description of your SF_6 emission reduction efforts and successes. EPA will be accepting nominations through February 10, 2012; specifics on the self nomination process will be distributed in early 2012.

Contact:
Sally Rand, EPA Program Manager
rand.sally@epa.gov

Mandatory Reporting of Greenhouse Gases Rule

On October 30, 2009, EPA published a rule for the mandatory reporting of greenhouse gases (GHGs) from large GHG emissions sources in the United States. Implementation of 40 CFR Part 98 is referred to as the Greenhouse Gas Reporting Program (GHGRP).

This comprehensive, nationwide emissions data will provide better understanding of sources of GHGs and will guide development of the policies and programs to reduce emissions. Publicly available data will allow reporters to track their own emissions, compare them to similar facilities, and aid in identifying cost effective opportunities to reduce emissions in the future. An estimated 85-90 percent of the total U.S. GHG emissions from across 41 industrial categories are covered by this rule. In general, the threshold for reporting is 25,000 metric tons or more of carbon dioxide equivalent (CO_2e) per year. Reporting is at the facility level.

Reports under this regulation are submitted annually and provide data collected during the previous calendar year (i.e. reporting year). Reports for calendar year 2011 are due on September 28, 2012. Reports for future years are due on March 31 for emissions in the previous calendar year, e.g., 2012 data will be due by March 31, 2013.

Reporting requirements for SF_6 from Electric Power Systems are set forth under Subpart DD of the regulation (75 FR 74774). A copy of the regulation and related information can be found online (http://www.epa.gov/climatechange/emissions/ghgrulemaking.html). Facilities are required to report under the GHGRP if their total nameplate capacity of SF_6-containing equipment exceeds 17,820 lbs of SF_6, which is estimated to be the equivalent to an emissions threshold of 25,000 metric tons of CO_2e per year.

Voluntary reporting of emissions under the SF_6 Partnership will continue for Partner companies that do not meet the threshold of Subpart DD of the GHGRP. Submission of the previous year data is requested by March 31. Partners that are required to report under the GHGRP no longer need to submit data via the Partnership report form.

EPA will continue to communicate relevant announcements regarding mandatory reporting via the Partnership email distribution list.

New Partners

The Partnership welcomes San Diego Gas & Electric and Westar Energy as new Partners in the program. The Partnership has continued to grow in size, nearly doubling from 48 members to 84 members as of December 2011. Charter members are specially recognized in the complete Partner list, which can be referenced at the end of this report.

Continued Growth and Success

When EPA and the electric power industry launched the Partnership in 1999, the challenge to reduce SF_6 emissions in technically and economically feasible ways was at hand. Partners met this challenge making significant reductions primarily by identifying and replacing or repairing old, leaking breakers. Over the years, Partners advanced their strategies to reduce SF_6 emissions, examining their system for all possible sources of potential emissions; purchasing new laser leak detection cameras; working with their vendors to receive SF_6 inventory related reports; tightening their gas cylinder inventories; purchasing more recycling carts; introducing software systems to better monitor and manage inventory; and improving on their overall management and training procedures. Voluntary action under the Partnership has yielded impressive results. In this reporting year, SF_6 Partners collectively reduced the average SF_6 emission rate to 3.8 percent compared to 4.4 percent in 2009 and 14.2 percent in 1999. SF_6 emissions in the 2010 reporting year are 73 percent lower than in the 1999 baseline year. Cumulatively, over the course of the Partnership, SF_6 Partners have prevented the escape of approximately 2.9 million pounds of SF_6 or 31.4 $MMTCO_2e$. Preventing the loss of this much gas into the atmosphere translates into an equivalent of $23.1 million to $34.7 million of avoided SF_6 purchases to replace such losses.

EPA applauds all Partners for the program's success and encourages Partners to continue setting and working towards ambitious reduction goals with the program.

For additional information, please contact:

Sally Rand
Program Manager
U.S. Environmental Protection Agency
Climate Change Division (6207J)
Washington, DC 20460
Tel: (202) 343-9739
E-mail: rand.sally@epa.gov

Know your System – Take the Partner Challenge to Improve SF_6 Nameplate Capacity Estimates

Partners are encouraged and challenged to reevaluate and develop thorough and accurate estimates of SF_6 nameplate capacity. Total nameplate capacity is recognized as difficult for Partners to determine given the various ages and types of SF_6-containing equipment and its varied distribution across numerous substations; having a reliable estimate is imperative to understanding system-wide SF_6 usage and accurately determining an SF_6 emission rate.

List of Partners (as of December 2011)

* Charter Partner

Subsidiaries are bulleted under parent companies

Allegheny Power
Greensburg, PA

American Electric Power (AEP)*
Columbus, OH

Arizona Public Service Company (APS)
Phoenix, AZ

Athens Electric Department*
Athens, AL

Austin Energy
Austin, TX

Bangor Hydro-Electric Company*
Bangor, ME

Big Rivers Electric Corporation*
Henderson, KY

Bonneville Power Administration*
Portland, OR

CenterPoint Energy*
Houston, TX

Central Maine Power Company*
Augusta, ME

Central Vermont Public Service Corporation*
Rutland, VT

City of Palo Alto
Palo Alto, CA

Consolidated Edison Company of New York, Inc. *
New York, NY

CPS Energy (formerly San Antonio City Public Service Board)*
San Antonio, TX

Duquesne Light Company*
Pittsburg, PA

E.ON U.S. LCC
Louisville, KY

El Paso Electric Company*
El Paso, TX

Eugene Water and Electric Board*
Eugene, OR

Exelon Energy Delivery (EED)

- **ComEd Energy Delivery***
  Chicago, IL
- **PECO Energy Delivery**
  Philadelphia, PA

FirstEnergy Corporation*
Akron, OH

Florida Power and Light Company (FPL)*
Juno Beach, FL

- **New Hampshire Transmission- Seabrook Station**
  Seabrook, NH

Fort Pierce Utilities Authority*
Fort Pierce, FL

Grand Island Utilities Department*
Grand Island, NE

Great River Energy
Elk River, MN

Hastings Utilities*
Hastings, NE

ITC Transmission
Novi, MI

Kings River Conservation District*
Fresno, CA

Lower Colorado River Authority (LCRA)
Austin, TX

Maine Public Service Company*
Presque Isle, ME

Manitowoc Public Utilities*
Manitowoc, WI

Memphis Light, Gas & Water Division
Memphis, TN

Menasha Utilities*
Menasha, WI

MidAmerican Energy
Des Moines, IA

Montana-Dakota Utilities
Bismarck, ND

Muscatine Power & Water*
Muscatine, IA

NSTAR Electric and Gas
Westwood, MA

- **Boston Edison Company**
  Boston, MA
- **Cambridge Electric Light Company**
  Boston, MA

- **Commonwealth Electric Company**
  Boston, MA

Nashville Electric Service (NES)
Nashville, TN

National Grid

- **Granite State Electric**
  Northborough, MA
- **Massachusetts Electric**
  Northborough, MA
- **Nantucket Electric**
  Nantucket, MA
- **Narragansett Electric**
  Providence, RI
- **New England Power Company**
  Westborough, MA
- **New England Electric Transmission Corporation**
  Westborough, MA
- **New England Hydro-Transmissions Company Inc.**
  Westborough, MA
- **Niagara Mohawk Power Corporation**
  Syracuse, NY

Nebraska Public Power District
Doniphan, NE

New York Power Authority
New York, NY

New York State Electric and Gas
Ithaca, NY

Northeast Utilities Services Company*

- **Connecticut Light and Power Company**
  Berlin, CT
- **Public Service Company of New Hampshire**
  Manchester, CT
- **Western Massachusetts Electric Company**
  West Springfield, MA

Northern Indiana Public Service Company (NIPSCO)
Merriville, IN

Oglethorpe Power
Tucker, GA

Oklahoma Gas and Electric Corporation* (OG&E)
Oklahoma City, OK

Oncor (formerly TXU)*
Dallas, TX

Otter Tail Power Company
Fergus Falls, MN

PNM Resources
Albuquerque, NM

Pacificorp
Portland, OR

- **Pacific Power**
  Portland, OR
- **Rocky Mountain Power**
  Salt Lake City, UT

Pacific Gas and Electric Corporation (PG&E)*
San Francisco, CA

Public Utility District No. 1 of Douglas County
East Wenatchee, WA

Public Utility District No. 1 of Pend Oreille County*
Newport, WA

Rochester Gas and Electric Corporation
Rochester, NY

Salt River Project**
Phoenix, AZ

San Diego Gas & Electric
San Diego, CA

Seattle City Light
Seattle, WA

Silicon Valley Power*
Santa Clara, CA

South Carolina Electric & Gas Company
Columbia, SC

Southern California Edison
Rosemead, CA

Southern Company*
Atlanta, GA

State of California – Department of Water Resources
Sacramento, CA

Tennessee Valley Authority (TVA)
Knoxville, TN

Texas Municipal Power Agency*
Bryan, TX

VT Transco LLC
Rutland, VT

Wallingford Electric Division*
Wallingford, CT

We Energies*
Milwaukee, WI

Westar Energy
Wichita, Kansas

** Salt River Project is a Charter Partner that left the Partnership, but recently rejoined in 2009.

Distribution of Partners

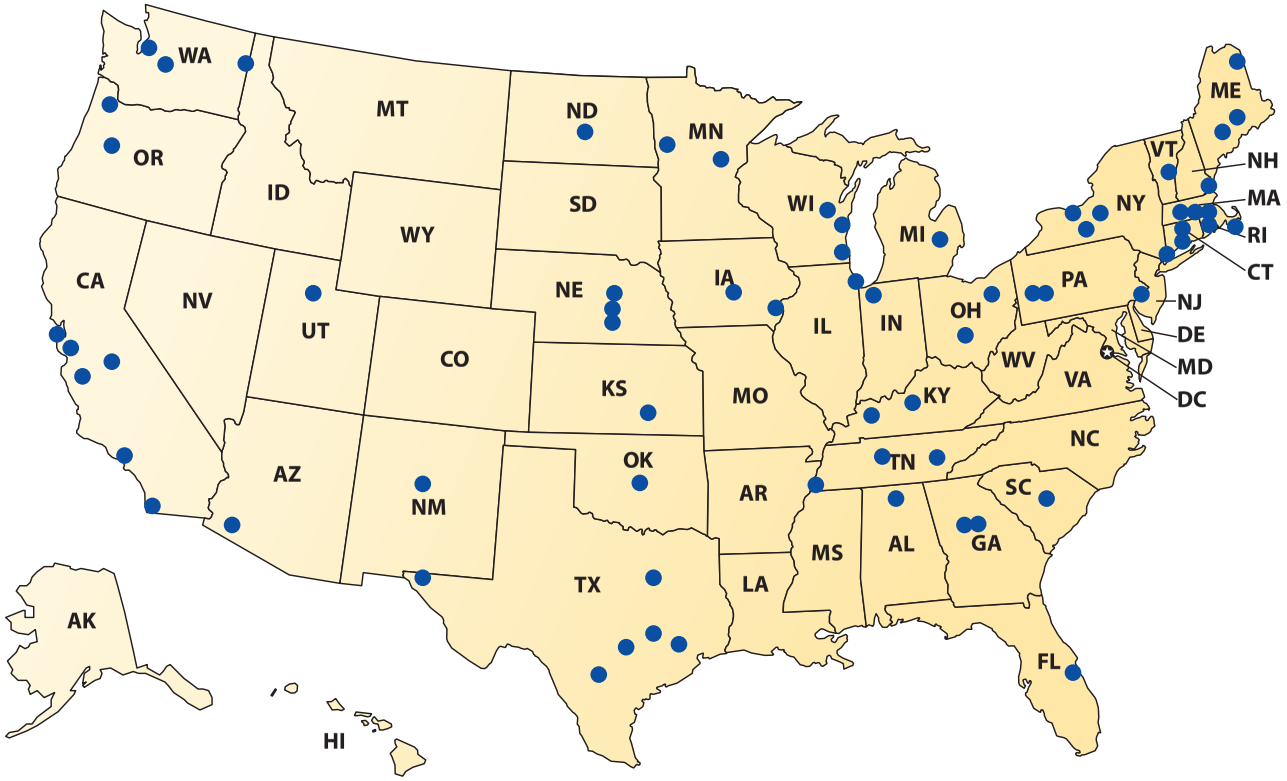

United States
Environmental Protection
Agency

Climate Change Division (6207J)
www.epa.gov
December 2011

ESW 2013
2013 IEEE IAS Electrical Safety Workshop
Changing the electrical safety culture
March 11 - 15, 2013 Dallas, Texas

ESW Home
ESW 2013 Home
Participating in ESW 2013
- Commercialism & Ethics
- Technical Sessions
- Students
- Tutorials
- CEU Certificates
- For Authors
- For Exhibitors
- For Corporate Supporters
- Technical Tours
- First Time Attendees
- Committee Meetings
- Companion Program
Conference Schedule
Hotel and Travel
Register for ESW 2013
Organizing Committee
Join Mailing List
About ESW
- Mission & Strategy
- Steering Committee
- History
- Body of Knowledge
- Awards & Recognition
- Affiliated Conferences

Join us for ESW 2013

If you would like to spend 5 days of intense interaction with more than 400 people who share a passion for preventing electrical injuries in the workplace, I urge you to join me in Dallas for our 20th annual *IEEE IAS Electrical Safety Workshop*.

Since its inception in Toronto in September 1991, the *IEEE IAS Electrical Safety Workshop* has provided the premier international forum to enable and accelerate change in the electrical safety culture and pushing the envelope on what is possible in preventing workplace injuries from electrical hazards.

If you are a veteran participant, you will see some changes to enhance the value you will take home and put into practice, whatever your role, responsibility or impact you have on preventing electrical injuries.

If you are a first time attendee, I want to emphasize what the *IEEE IAS Electrical Safety Workshop* is and is not about. The mass market in electrical safety conferences is in the area of training and compliance with standards and regulations – helping people and organizations understand and apply current requirements. While this is essential in preventing electrical incidents and injuries, it is not the primary mission of the *IEEE IAS Electrical Safety Workshop*. Our mission is more about path finding and creating the future in electrical safety by changing how we think about what is possible, or in other words, changing the electrical safety culture.

Our Mission

- Accelerate application of breakthrough improvements in human factors, technology, and managing systems that reduce risk of electrical injuries,
- Stimulate innovation in overcoming barriers,
- Change and advance the electrical safety culture to enable sustainable improvements in prevention of electrical accidents and injuries.

On behalf of the ESW 2013 organizing committee, I look forward to seeing you in Dallas.

Dan Doan, Chair
ESW 2013 Organizing Committee

Keep the Conversation Going

The ESW invites you to continue contributing, learning and networking all year long. Help us to keep the conversation going:

© Copyright 2013 IEEE – All Rights Reserved.
Use of this website signifies your agreement to the Terms of Use.
For questions or comments, please contact the Webmaster.

S&C Education Events

Electric Safety Work Practices

Attendees of this two-day training course will gain a better knowledge of how to properly and safely work on and around energized electrical equipment, both exposed and non-exposed, by utilizing the NFPA 70-E and OSHA 1910 standards as their guidelines, as well as U.S. consensus standards on safety. Consider that even with today's advanced technology, in the US alone, on the average, three people are sent to burn centers and one is killed due to electrical injuries per day. That is why it is crucial for employers to properly train their electrical workers to ensure that they have the knowledge and the appropriate personal protective equipment (PPE) to do their jobs as safely as possible. Every employer should have this presented yearly to their employees to not only stay current on the rules and regulations but also on the important constant reminder to work safe every day.

Who Should Attend

Technical individuals involved in operations and maintenance of electrical distribution systems equipment on a utility, industrial, and commercial power distribution systems.

Instructor

Wayne Sherrill

Wayne is the Project Support Manager for the Power System Service Division of S&C Electric Company and has more than twenty-five (25) years experience as a licensed electrical contractor. **Complete Bio**

Seminar Agenda

Topics covered in the workshop include:

- Introduction
- Safe Work Preparations
- Safe Work Practices
- Safe Work Performance
- Safe Work Design and Operation
- Review and Examination as required

COURSE DATES & FEES

November 13-14, 2012

$1150.00. Includes lunch each day. Receive a 10% Early Registration Discount if registering at least 6 weeks in advance.

For Group and Student Discounts, contact us at **education@sandc.com**

Register Here

LOCATION

CHICAGO

S&C Electric Company
6601 North Ridge Boulevard
Chicago, IL 60626

EDUCATION CREDITS

1.2 Continuing Education Units (CEU) or 12 Professional Development Hours (PDH).

QUESTIONS?

E-mail **education@sandc.com**
or contact Marilyn Brown at
(773) 338-1000 x2518

© 2013 S&C Electric Company All rights reserved.

Programs & Courses

Computer Workshops

Continuing Professional Development

Digital Media

Electric Sector

Encore

Green Academy

Health and Wellness

Information Studies

Online Courses

Transition to Teaching

Electric Power Technology

Are you looking for a way to get involved in the fast-growing “green” industry? The SLCC Electric Sector courses provide training for developing and enhancing workforce skills in the emerging electric power sector.

Check out our Electric Power Technology Certificate. Program courses will train non-apprenticeship students looking to enter the Electrical Lineworker, substation or metering industry. These courses will prepare students to enter other electric sector fields such as Smart Grid Technician.

In addition, many Smart Grid Training professional development workshops and courses are being developed to update the skills of those already in the industry and wanting to know more about future integration and implementation of Smart Grid technologies.

The Lineman apprenticeship program offers in-class and online coursework as well as hands on lab experience for those already employed by a utility company and working towards journeyman status.

Program Links

- Info
- All Program Courses
- Current Courses
- Contact
- FAQ

This is a list of courses offered through Continuing Ed:

Energy Essentials
CESG 0150

This course serves as an introduction to the energy industry, providing a historical perspective and a look toward future technologies. Content focuses on the impact of energy types and strategies on the environment and various cultures. The course quantifies the need for energy management to become an integral part of society at all levels.

View sections

Mathematics for the Energy Industry
CESG 0175

Students will learn the necessary math skills for application in the electrical industry. Content includes fundamental concepts of algebra, equations, and basic trigonometry that relates to industry scenarios.

View sections

Electrical Distribution Systems
CESG 0441

The design and construction of electrical distribution systems will be covered in this course. Topics include substations; overhead and underground transmission and distribution lines; conductors and insulators; high and low-voltage troubleshooting procedures; stringing and live-line procedures.

View sections

Transformer Basics
CESG 0450

This course exposes students to transformer design and operation that emphasizes the installation and maintenance of transformer equipment. Subjects include: three phase transformers; autotransformers and reactors; safety requirements and troubleshooting.

View sections

Pole Climbing, Ropes and Rigging
CESG 0500

Students will learn to identify and implement the proper application of ropes, slings and rigging for electrical industry applications. Subjects include the care and maintenance of ropes and equipment, and hands-on training leading to proficiency in pole-climbing and rigging tasks.

View sections

Print Reading
CESG 0600

An introductory course in electrical utility blueprint reading which defines the physical and electrical arrangements of equipment including power plants, substations, transmission lines, distribution lines and customer service facilities. This is a critical skill for individuals who operate, maintain, repair or modifying utility equipment.

View sections

Digital Electronics
CESG 0610

An entry level course designed to give the student an understanding of digital electronic devices. The course covers number systems, binary mathematics, digital codes, logic gates, Boolean algebra, Karnaugh maps, and combination logic. Course emphasis is on circuit logic analysis and troubleshooting digital circuits.

View sections

Electromechanical Systems
CESG 0620

A study of devices and components that translate electrical energy into mechanical motion. Topics include DC and AC motors and controllers, servo motors, stepping motors, solenoids, linear motors, and actuators. The course also introduces the student to programmable logic controllers, ladder logic, and PID controllers.

View sections

Underground Distribution Systems
CESG 0630

This course is designed to introduce students to the design and construction of underground electrical distribution systems and the challenges that an underground structure presents. Students will be trained to safely perform a number of common distribution tasks typically performed in the construction and maintenance of an underground distribution system.

View sections

Computer Literacy
CESG 0910

An introductory course in computer software applications used in the energy sector. Students will learn effective web-search techniques and utilize word processing, database, spreadsheet, and presentation software.

View sections

Workplace Safety/OSHA 3095
CESG 0950

Students will gain a strong understanding of OSHA 3095 Electrical Safety standards and the hazards of the electrical industry. Topics include electrical hazard recognition and OSHA inspection procedures.

View sections

© Salt Lake Community College 2010. All rights reserved.
Larry H. Miller Campus, 9750 South 300 West | MFEC 211 | 801.957.5303

CROSS CONNECTION CONTROL PROGRAM

OF UTAH

January 2010

Cross Connection Control Commission
Michael S. Moss, Secretary

Division of Drinking Water
195 North 1950 West, 3rd Floor
P.O. Box 144830
Salt Lake City, Utah 84114-4830
Phone (801) 536-4200

CROSS CONNECTION CONTROL PROGRAM OF UTAH

GUIDELINES - REFERENCE

Page

I. SCOPE 1

II. DEFINITIONS 2

III. AUTHORITY 3

A. Applicable Laws 3
B. Regulations / Codes and Policies 3
C. Enforcement 4

IV. RESPONSIBILITIES 6

A. Division of Drinking Water 6

1. Public Drinking Water System 7
2. Certified Backflow Technician 9
3. Hazard Assessment Official 10

B. Division of Occupational & Professional Licensing 11

1. Plumbing Inspection Official 11
2. Licensed Plumber 12

C. Customer/Consumer 12

V. STANDARDS 12

A. Cross Connection Control and Backflow Prevention Programs 12
B. Certification of Backflow Technicians 14
C. Degree of Hazard 15
D. Types of Backflow 15
E. Methods of Protection 16
F. Assembly Installation Criteria 16
G. Approved List for Backflow Prevention Assemblies/Devices 21
H. Assembly Testing Frequency 22
I. Assembly Repair 22
J. Assembly Test Result Reports 23
K. Assembly Location Reports 24

VI. POLICIES 25

A. Non-Industrial Connection Protection 25
B. Residential and Small Sprinkling Systems 26
C. Dual Source Sprinkling Systems.....27
D. Installation of Not Approved Assemblies/Devices.....27
E. Line Sizing 27
F. Containment versus Isolation Techniques 28
G. Privately Owned Drinking Water Wells 29

APPENDICES

A. Ordinance Guidance Document
B. List of Approved Backflow Prevention Assemblies/Devices
C. Approved Assembly Testing Methods
D. List of Acceptable Testing Equipment
E. Assembly Test Report Form

I. SCOPE

The scope of this document is to assist all public drinking water systems in the design, implementation and enforcement of a viable, ongoing cross connection control program which will ensure that both the water purveyor and the customer have exercised "reasonable diligence" in protecting the public drinking water.

A cross connection is defined as, "Any actual or potential connection between a potable water system and any other source or system through which it is possible to introduce into the public drinking water system any used water, industrial fluid, gas or substance other then the intended potable water." Cross connections and backflow incidences in the state of Utah have resulted in dangerous, highly contaminated water unexpectedly entering public drinking water systems. Irrigation waters, oil, toxic boiler compounds, sewage, pesticides, and other extremely dangerous contaminants have found their way into Utah public drinking water systems due to cross connections.

Millions of taxpayer dollars are spent every year to protect drinking water sources, systems, and treatment facilities, but even with the best infrastructure the integrity of the drinking water system and the quality of the water can be compromised by a single cross connection. One single cross connection can result in illness and, in an extreme case, death which could result in millions of dollars in court settlements as well as destroy the public's confidence of the public drinking water system.

Legal actions concerning pollution or contamination of public drinking water systems brought against water purveyors by consumers who have been affected by backflow incidences have reached astronomical financial proportions with the water purveyors often being found negligent in their methodology of protection or in the quality of the water they supply.

These legal proceedings, as well as federal law, state law, plumbing codes, rules and regulations, all mandate the specific needs for an on-going cross connection control program by all public drinking water systems serving the public whether publicly or privately owned.

There is a joint responsibility contract (whether verbal or written) that exist between the public drinking water system and the customer. This contract dictates that the water purveyor will provide a safe, adequate supply to the customer who in turn will maintain their privately owned plumbing system in compliance with local ordinances, requirements, codes and policies.

If this joint responsibility contract is enforced, it will protect both the public drinking water system and the private customer's responsibility and liability.

This type of program would enable the water purveyor to protect the quality of water in the distribution system thus exercising "reasonable diligence" for the protection of the safe drinking water supply.

II. DEFINITIONS

A. **Administrative Authority** shall mean the individual, official, board, department, or agency established and authorized by a state, county, city, or other political subdivision created by law to administer and enforce the provisions of the cross connection control program and/or the plumbing code.

B. **Backflow** shall mean the undesirable reversal of flow of water or mixtures of water and other liquids, gases, or other substances into the distribution pipes of the potable water supply from any source.

C. **Backpressure** shall mean the phenomenon that occurs when the customer's pressure is higher than the supply pressure. This could be caused by an unprotected cross connection between a drinking water supply and a pressurized irrigation connection, a boiler, a pressurized industrial process, elevation differences, air or steam pressure, use of booster pumps or any other source of pressure.

D. **Backsiphonage** shall mean a form of backflow due to a reduction in system pressure which causes a sub-atmospheric pressure to exist at a site in the water system.

E. **Certified Backflow Technician** shall mean an individual that has successfully completed a Division of Drinking Water approved backflow certification course with a written and practical examination, and has maintained this certification in accordance with R309-305, Certification Rules for Backflow Technicians.

F. **Consumer/Customer** shall mean the owner or operator of a privately or publicly owned plumbing system(s) having a service connection from the public drinking water system.

G. **Containment (Meter or Point of Connection Protection)** shall mean the practice of installing approved backflow prevention assemblies/devices at the service connection of consumers in order to protect the public drinking water system from any backflow from the consumers plumbing system.

H. **Contaminate** shall mean any substance introduced into the public drinking water system which creates a threat to the public health such as poisoning, pathogenic organisms or any other public health concern.

I. **Cross Connection** shall mean any actual or potential connection between a potable water system and any other source or system through which it is possible to introduce into the public drinking water system any used water, industrial fluid, gas or substance other then the intended potable water.

J. **Degree of Hazard** shall mean either a **pollutant (non-health)** or **contaminate (health)** hazard that may be introduced into the public drinking water system through a cross connection. Through an evaluation of the consumers plumbing system, the threat to

public health (the degree of hazard) will be determined. In the past these terms have been referred to as high hazard for **health** and low hazard for **non-health**.

K. **Isolation (Plumbing Code Compliance)** shall mean the practice of installing approved backflow prevention assemblies/devices at each point of cross connection or system outlet as required by Plumbing Code as adopted by the State and its amendments.

L. **Pollutant** shall mean any substance introduced into the public drinking water system which does not create a threat to the public health but which does adversely and unreasonably affect the aesthetic quality of the water.

M. **Public Drinking Water System** shall mean a water system that is either publicly or privately owned, that provides water for human consumption and other domestic uses, which: has at least 15 service connections, and/or serves an average of at least 25 individuals at least 60 days out of the year.

N. **Service Connection** shall mean the terminal end of the public drinking water system where the water purveyor transfers jurisdiction and sanitary control of the water. If a water meter is present then the service connection exists at the downstream end of the meter.

O. **Water Purveyor** shall mean the public or private owner or responsible party of a public drinking water system.

III. AUTHORITY

A. Applicable Laws:

Federal Public Law 104-182, (the Safe Drinking Water Act and Amendments of 1996), identifies the responsibility of each public drinking water system to protect the quality of the water supplied to the consumers from any sources of contamination. As stated in the US EPA Cross Connection Control Manual, the water purveyor must provide a water that complies with all EPA standards at the source and deliver it to the customer without the quality being compromised as a result of it's delivery through the distribution system.

Utah Code, Section 19-4-112 (2d) states, "there shall be no cross connection between the potable (drinking water system) and nonpotable (auxiliary water supply) systems.

B. Regulations/Codes:

Utah Public Drinking Water Rules (UPDWR), Section R309-105-12 place the following requirements on public drinking water suppliers:

"The water supplier shall not allow a connection to his system which may jeopardize its quality and integrity". In addition this rule identifies the need for a viable cross connection control program which includes an inventory of testable assemblies, testing and service records for the assemblies, testing frequency requirements and adherence to all

requirements of Plumbing Code as adopted by the State and its amendments.

Occupation Safety and Health (OSHA) Rules and Regulations Part 1910-Subpart J, Section 1910.41, require that each employer furnish his or her employee(s) with an adequate safe drinking water supply. This infers the need to protect against any backflow which would create an unsafe drinking water supply within the consumer's distribution system as well as the public drinking water system.

The adopted Plumbing Code requires that an approved backflow prevention/devices be properly installed, tested and utilized.

The Division of Drinking Water shall maintain a list of backflow prevention devices and assemblies approved for containment use and applicable for use within the jurisdiction of the public water system. This list shall be accessible on the Drinking Water webpage.

C. Enforcement:

There are two tiers of enforcement responsibilities within a Cross Connection Control Program. The first tier is with the Utah Department of Environmental Quality, Division of Drinking Water where the Public Drinking Water Rules apply to the public drinking water systems.

The second tier involves the public drinking water system's enforcement of a local ordinance, policy, or requirements applied to the customer.

TIER 1 Division of Drinking Water:

The enforcement methodologies associated with the Division of Drinking Water's application of the Public Drinking Water Rules vary from system to system, depending on the size and complexity of the situation. The usual enforcement means are:

1. A written Notice of Violation; issued by the Division of Drinking Water.

2. An Administrative Order; issued through the Utah Drinking Water Board wherein the public drinking water system is ORDERED to do certain things to come into compliance with the Public Drinking Water Rules.

3. A Rating Change of the Drinking Water System. There are currently three ratings applied to public drinking water systems:

   a. APPROVED: This rating means that the water supplier is substantial in compliance with all drinking water rules.

   b. CORRECTIVE ACTION: This rating reflects that some areas of deficiencies have been noted but the system is taking definite steps towards correcting these deficiencies.

c. NOT APPROVED: This rating identifies that the system is not in compliance with the drinking water rules and has been given ample opportunity to address certain noted deficiencies, and the system has failed to do so. This rating, when assigned, stops all federally insured home loans and many funding programs involving state and federal grants/loans. This sanction will remain in place until such time as the system adequately addresses the problems which caused this rating to be assigned.

TIER 2 Public Drinking Water Systems:

The second tier of enforcement involves methodologies which the public drinking water system applies to the customer. This is mandated and authorized by the adoption of some form of local authority (hereinafter referred to as ordinance) (see Appendix A - Ordinance Guidance Document). Within the ordinance, there should be provisions that: a) require protection on all cross connections; b) require periodic testing of all backflow prevention assemblies; c) require periodic hazard assessments; d) identify enforcement methods which should include discontinuation of water service to customer's that violate the ordinance; and e) identify who will administer the program. There could also be methodologies within the ordinance for service renewal fees, connection fees, inspection fees and/or a surcharge for maintenance of hazardous connections.

This type of enforcement (public drinking water systems enforcing their ordinances upon the customer) is legally viable, as long as there is a local ordinance in place that meets the basic criteria of the cross connection control program of the state.

IV. RESPONSIBILITIES

In the State of Utah, the authority and responsibility for the enforcement of an effective Cross Connection Control and Backflow Prevention Program lies both within the Department of Environmental Quality, Division of Drinking Water (DDW) and the Department of Commerce, Division of Occupational and Professional Licensing (DOPL).

The DOPL has the responsibility to ensure that all new plumbing is installed according to the Plumbing Code and associated amendments adopted by the State of Utah. This responsibility includes that no installation of potable water supply piping or part thereof shall be made in such a manner that it will be possible for used, unclean, polluted, or contaminated water, mixtures, or substances to enter any portion of such piping and pose a threat to the integrity of the water contained within the potable water supply. Where such connections are required they shall be protected with the appropriate method of protection, installed in the proper application and in accordance with the appropriate installation criteria.

The DDW and each public drinking water system have the responsibility of protecting the quality and integrity of the drinking water contained within the public drinking water systems' distribution system. Due to the fact that private plumbing systems are in a

constant state of change; which may or may not be installed by a licensed plumber or be inspected to ensure that the changes meet the adopted Plumbing Code requirements, the quality of the drinking water is the ultimate responsibility of each public drinking water system. In order to carry through with this responsibility, each public drinking water system is required to evaluate the backflow prevention issues specific to its distribution system and to implement a Cross Connection Control Program to prevent any type of backflow of this "used" water into the distribution system.

Because of this shared responsibility between the DDW and DOPL, an effective Cross Connection Control Program is one that involves both the water purveyor and the plumbing inspection or code official, as well as many other individuals involved in the backflow industry. The key individuals and their respective responsibilities are outlined in the following sections.

A. Utah Department of Environmental Quality, Division of Drinking Water, Drinking Water Board and Cross Connection Control Commission:

These government agencies are charged with the responsibility of promulgating and enforcing laws and rules to carry out an effective cross connection control program for the State of Utah.

The Utah Department of Environmental Quality, Division of Drinking Water has the primary responsibility of ensuring that water purveyors operate public drinking water systems in such a manner as to preserve and protect public health, including protecting the system from backflow.

The Drinking Water Board has the primary responsibility of promulgating and enforcing the Public Drinking Water Rules that regulate public drinking water systems and the certification of backflow technicians.

The Cross Connection Control Commission has the responsibility of advising the Drinking Water Board as to the appropriateness of rules, regulations, codes, enforcement activities, etc., as they relate to cross connection control programs, policies and backflow prevention technician certification.

The Division of Drinking Water, as staff to the Cross Connection Control Commission and the Drinking Water Board, will work toward ensuring that each public drinking water system protects its distribution system from possible contamination.

Based on an evaluation of each individual water system by the system personnel, the protection may be accomplished by various methods (see Policy F, Containment versus Isolation).

1. **Public Drinking Water System**:

Under the Utah Public Drinking Water Rules (Section R309-105-12) the water

purveyor has the primary responsibility for the prevention of any substance including water from any unapproved source, from entering the public drinking water system. The water purveyor has a responsibility to eliminate any situation where a water connection may jeopardize the quality of the drinking water within the public drinking water system. This may require discontinuance of water service for a customer who refuses to comply.

The public drinking water system is prohibited by these rules from installing or maintaining a water service connection to a consumer where a pollutant, plumbing or contamination hazard exist, unless the public drinking water system is protected against backflow by an approved backflow prevention assembly/device properly installed and maintained, as required by the adopted Plumbing Code.

The public drinking water systems' responsibilities include the source of supply, all of the public distribution system, the service lines and ends at the consumer's meter or property line. In addition, each public drinking water system must work towards ensuring that the customer properly protects the quality and integrity of the drinking water contained within the private plumbing system as well as the public water distribution system.

Activities that a customer engages in could easily jeopardize the quality of the drinking water if a backflow incident occurs. For this reason, the water purveyor must require, as a condition of connection for service, that the customer institute protection measures that may include: installation, maintenance, and periodic testing of approved backflow prevention assemblies or inspection of devices. In addition, the water purveyor shall exercise "reasonable diligence" to ensure that not only the public drinking water system, but also the customer has taken the proper steps to protect the public drinking water system from possible contamination from whatever activities the customer engages in.

To ensure that the proper precautions are taken, the public drinking water system is required to determine the "degree of hazard" to the public drinking water system when the service connection is made. In the case of an existing connection, a hazard assessment investigation or survey must be conducted to determine the "degree of hazard" within the existing site. Also, education is needed for the customer to understand the dangers of cross connections and their personal liability should a backflow event occur.

A hazard assessment is a detailed inspection of the customer facilities within the customer's plumbing system. This inspection would involve inspecting all water uses and piping within the system. If the customer refuses access to their facilities, the plumbing system must be classified as a high hazard connection and appropriate protection must be required at the service connection.

When it is determined that a backflow prevention assembly is required for the protection of the public drinking water system; the water purveyor shall require as a

condition of water service:

a. Installation of a backflow assembly/device at each service connection (containment, meter protection) and/or recommend the appropriate protection is installed at each point of cross connection (isolation, plumbing code compliance) within the consumer's water system.

Upon a requirement to install an assembly/device, the supplier must consider the degree of hazard AND the hydraulics of the customer's water system (thermal expansion, etc.) to ensure that the assembly/device is installed in accordance with its proper installation criteria and in the appropriate application.

b. Annual compliance inspection of the customer's water system, which may include the minimum annual testing of approved backflow prevention assemblies/devices.

c. Maintenance of records of each test and subsequent maintenance and repair, including materials or replacement parts used for approved backflow prevention assemblies/devices within their jurisdiction as well as records of hazard assessment investigation or surveys.

Copies of all backflow assembly test reports (reference Appendix E, Assembly Test Report) which are completed during the compliance inspection within the public drinking water system, will be maintained by the water purveyor and be available for inspection by the Division of Drinking Water staff or their designees (R309-101-4.3 and R309-105-12) during sanitary surveys. The customer and the Certified Backflow Technician should also retain copies of the test results for their files for five years.

Each public drinking water system must adopt some form of local authority or ordinance (See Appendix A, Ordinance Guidance Document). Within the ordinance, there should be provisions that: a) require protection on all cross connections; b) require periodic testing of all backflow prevention assemblies; c) require periodic hazard assessments; d) identify enforcement methods which should include discontinuation of water service to customer's that violate the ordinance; and e) identify who will administer the program. The ordinance should also address the methodology of protection (See Policy F, Containment versus Isolation Requirement) and technology.

The public drinking water system shall also design and implement a general public awareness and education program so that their customers will be apprised of the dangers of cross connections. The customers must be informed of the hazards associated with common activities that they, themselves, may impose on the public drinking water system.

The public drinking water system should look towards protection of all public

facilities (golf courses, cemeteries, libraries, parks, public buildings, etc.) prior to full implementation of a cross connection control program on the customers of the public drinking water system.

WHEN A BACKFLOW OR SUSPECTED BACKFLOW INCIDENT OCCURS, THE DIVISION OF DRINKING WATER SHALL BE NOTIFIED IMMEDIATELY AT 536-4200 (OR 536-4123 AFTER HOURS), AND WATER SAMPLES SUFFICIENT TO DETERMINE THE DEGREE AND EXTENT OF CONTAMINATION MUST BE DRAWN FOR ANALYSIS.

2. **Certified Backflow Technician**:

When employed by a public drinking water system or by a customer to test, repair and/or maintain any backflow prevention assembly, the Certified Backflow Technician will have the following responsibilities:

a. Ensure that acceptable procedures are used for testing, repairing and maintaining any backflow prevention assembly (See Appendix C, Approved Assembly Testing Methods).

b. Make reports of such testing and/or repair to the customer and the public drinking water system, on forms approved for use by the Cross Connection Control Commission (Reference Appendix E, Test Report Form).

c. Include on report a list of any materials or replacement parts used to effect a repair or perform maintenance of that assembly.

d. Ensure that any replacement parts are equal in quality to parts originally supplied within the assembly and that they are supplied only by the manufacturer or their agent.

e. Avoid changing the design, material, or operational characteristics of the assembly during any repair or maintenance.

f. Perform test and be responsible for the competency and accuracy of all testing and reports thereof.

g. Ensure the status of technician's certification is current.

h. Be equipped with and competent in the use of all tools, gauges, and equipment necessary to properly test, repair, and/or maintain a backflow prevention assembly.

Failure to report a failing assembly to the public drinking water supplier which supplies water to the premises protected by that particular assembly within five (5) working days may be grounds for revocation of a backflow technicians' certification.

Any commercially available Class II or III Certified Backflow Technician is authorized to test any backflow prevention assembly at the invitation of the owner, and to report the results of that test to the owner and the water purveyor. However any repairs on backflow prevention assemblies which did not pass a test conducted by a Certified Backflow Technician, must be performed by a tester having appropriate licensure from the Department of Commerce, Division of Professional Licensing who also holds a current Class II or III Backflow Technician Certificate or by an "agent of the owner" of the assembly.

3. **Hazard Assessment Official**:

This official can be anyone whom the local jurisdiction has authorized and delegated to perform compliance and/or hazard assessment inspections or surveys and who should also hold a Class I or Class III Utah Backflow Technician Certificate.

This individual shall conduct hazard assessments to determine the "degree of hazard" to the public drinking water system from an individual service connection (new or existing). In the case of an existing connection, a hazard assessment investigation or survey must be conducted to determine the "degree of hazard" within the existing site, as well as educating the customer to the dangers of cross connections and their personal liability should a backflow event occur. A hazard assessment is a detailed inspection of the customer facilities within the service connection. This inspection would involve inspecting all water uses and piping within the connection. If the customer refuses access to their facilities, the service connection must be classified as a high hazard connection and appropriate protection must be required at the service connection.

B. <u>Utah Department of Commerce, Division of Occupational and Professional Licensing, Uniform Building Code Commission, Plumbing/Health Advisory Committee, Plumbers Licensing Board, Building Inspector Licensing Board:</u>

These government agencies are charged with the responsibility of promulgating and enforcing laws, rules, regulations, policies and carrying out an effective and standardized statewide plumbing code, and the licensing of plumbers and plumbing inspectors.

The Utah Department of Commerce, Division of Occupational and Professional Licensing has the responsibility of ensuring that the plumbers and plumbing inspectors licensed under their authority have met all the training and educational requirements promulgated by the Plumbers Licensing Board and the Building Inspector Licensing Board.

The Plumbing/Health Advisory Committee has the responsibility of advising the Uniform Building Code Commission as to the appropriateness of rules, regulations, codes, enforcement activities, etc., as they relate to the plumbing code adopted by the State.

1. **Plumbing Inspector/Code Official**:

Plumbing inspection plays a key role in any political jurisdiction. Plumbing inspection

departments and code officials have the responsibility to not only review building plans and inspect plumbing as it is installed. The inspector also has the explicit responsibility of preventing any unprotected cross connections from being installed into any structures within their jurisdiction.

Where the review of any building plans suggest or detects potential for a cross connection being made an integral part of the potable water system, the inspector or code official must REQUIRE such cross connection be either eliminated or be provided with an approved backflow prevention assembly/device in accordance with the adopted Plumbing Code and associated amendments.

In requiring a device or assembly, the inspector or code official must determine the degree of hazard presented to the potable water system AND the hydraulics of the customer's water system (thermal expansion protection, etc.), to ensure the proper assembly/device is installed in accordance to its proper installation criteria.

The local code official's responsibility begins at the point of service, (the downstream side of the meter or property line) and carries throughout the entire length of the customer’s drinking water system.

The plumbing inspector will inquire about the intended use of the potable water at any point where it is suspected that a cross connection may be made or where one is actually designed by the plans. When such a cross connection (actual or potential) is discovered, the code official shall require that an approved backflow prevention assembly/device be installed in accordance with the adopted Plumbing Code.

2. **Licensed Plumber**:

The licensed plumber has the responsibility to ensure that all his work is installed in accordance with the adopted plumbing code and associated amendments.

C. Customer:

The public water system customer has the primary responsibility of maintaining his private plumbing system in compliance with the current plumbing code.

The customer may be required to bear the responsibility and expense of installing, maintaining and inspecting all high hazard air gaps, atmospheric vacuum breakers, hose bib vacuum breakers, and the testing, repairing and maintenance of all approved pressure vacuum breakers, double check valves assemblies, dual check valve devices, and reduced pressure zone backflow prevention assemblies within his premises.

V. STANDARDS

A. Cross Connection Control and Backflow Prevention Programs:

Every public drinking water system in the State of Utah is required to have a cross connection control program in place as stated in the Public Drinking Water Rules section R309-105-12. A cross connection control program consists of a number of components which when properly administrated are designed to prevent contamination from entering the public drinking water distribution system.

The main components of an effective cross connection control program are: local authority; public awareness; trained staff; record keeping; and on-going enforcement. These components are the standard against which the public drinking water system's cross connection control and backflow prevention program will be measured.

1. **Local Authority:**

This would consist of an ordinance, bylaw, or some other type of legal provision established by the council, board, or governing legal body, that would authorize the public drinking water system to carry out a cross connection control program. Specific items to be covered in this ordinance would include:

a. Requirements for protection of all cross connections;

b. Requirements for periodic testing of assemblies and/or devices;

c. Requirements for periodic hazard assessment investigations or surveys;

d. Identify enforcement methods including authority to discontinue service to connections that refuse to comply; and

e. Identify responsible party for administering program and enforcement.

2. **Public Awareness and Education:**

A good public awareness program will annually provide information to the public concerning:

a. What cross connections are;

b. How they can be prevented;

c. What types of protection are available; and

d. The concerns associated with thermal expansion where protection is required.

In addition, a good public awareness program will target more than the public drinking water system customers. Other groups or individuals are necessary to ensure that the cross connection control program will be successful in the community. For example, presentations can be made to plumbing supply stores, school districts, and civic groups.

3. **Trained or Certified Staff:**

It is recommended but not required that at least one member of the public drinking water system's staff be trained and certified as a backflow technician. It is, however, imperative though that a least one member of the system's staff have adequate training in the basics of cross connection control and how to manage a program.

This training is made available to managers and operators throughout the State through organizations such as the Rural Water Association of Utah, Intermountain Section of the American Water Works Association, Rural Community Assistance Corporation and the Utah Chapter of the American Backflow Prevention Association. Division of Drinking Water staff is also available to provide training in the area of cross connection control.

4. **Record Keeping:**

Once a public drinking water system has an ordinance and has established a cross connection control program, an annual detailed record keeping process must be established and maintained. Records should be made and kept concerning the following:

a. All surveys or inspections;

b. Inventory and locations of assemblies and high hazard air gaps;

c. Test histories and inspection records of the inventoried sites;

d. Any backflow incidents;

e. All corrective actions taken; and

f. All compliance and enforcement actions.

5. **On-going Enforcement Program:**

The program will only be as effective as the individuals who are authorized to carry it out. Ideally this would extend to the building inspection and or plumbing inspection departments where possible; but as a minimum someone in the water system shall be authorized to administer the program and take the necessary compliance actions.

Annual testing of backflow prevention assemblies may be done by public drinking water system personnel or by commercially available certified backflow technicians as required by the water purveyor. Annual hazard assessment investigations or surveys should be done by public drinking water system personnel; however, they may be preformed by commercially available certified backflow technicians as allowed by the

water purveyor.

It is the combination of all program components on an annual basis that protect the safety and health of the water consumers as well as lower the water system's legal liability. If only one or two of the components are addressed then the system may actually be increasing its vulnerability.

B. Certification of Backflow Technicians:

The authority to certify backflow technicians (all three Classes) is found in the Utah Code, Section 19-4-104 (4a). Rules concerning the certification of the three Classes of backflow technicians have been written and adopted by the Cross Connection Control Commission and adopted by the Utah Drinking Water Board (R309-305).

Each Certified Backflow Technician will be issued a five digit certification number through the Division of Drinking Water. All test reports will have this five digit number in the appropriate areas of the test form.

The Division of Drinking Water will maintain a list of all certified technicians and those certified Class II and III technicians who are available for commercial testing.

C. Degree of Hazard:

For cross connection control and backflow prevention, there will are only two (2) "degrees of hazard". These degrees of hazard may also be found in the Plumbing Code, as adopted by the State of Utah.

The definitions of the two "degrees of hazard" are:

1. **Low or non-health hazard**: Pollutants, aesthetic (color, odor, taste, appearance) no health effects if consumed.

2. **High or health hazard**: Contaminants, any toxic substances or pathogens that may cause illness or death if consumed.

In determining the Degree of Hazard, **the health impact to young children, the elderly and the immunocompromised, or any other health-compromised population must be taken into account.** If the water purveyor is in need of assistance in determining the degree of hazard that a particular service connection or cross connection is presenting to the public drinking water system the Division of Drinking Water should be contacted for assistance.

D. Types of Backflow:

Independent of the "Degree of Hazard" determination, there are two causes or "types" of backflow. They are:

1. **Backsiphonage**: This phenomenon occurs when the supply pressure is reduced to 0 psi or below, which may cause a vacuum within the water supply system. This could be a result of high usage demand, fire flows, line breaks, or turning off the main supply for maintenance and repair.

2. **Backpressure**: This phenomenon occurs when the customer's pressure is higher than the supply pressure. This could be caused by a cross connection between a drinking water supply and a pressurized irrigation connection, a boiler, a pressurized industrial process, elevation differences, air or steam pressure, use of boosters pumps or any other source of pressure.

E. Methods of Protection:

The appropriate method of backflow protection to be utilized will be based on the degree of hazard, the type of backflow conditions present, as well as the specific installation criteria for each method of backflow protection (See Section V, F-Assembly Installation Criteria).

Degree of Hazard	Type of Backflow	Approved Method of Protection
High or Low	Backsiphonage & Backpressure	Air Gap
High or Low	Backsiphonage & Backpressure	Reduced Pressure Zone Backflow Prevention Assembly (RP)
High or Low	Backsiphonage **ONLY**	Pressure Vacuum Breaker (PVB)
High or Low	Backsiphonage **ONLY**	Spill-Resistant Vacuum Breaker (SVB)
High or Low	Backsiphonage **ONLY**	Atmospheric Vacuum Breaker (AVB)
Low	Backsiphonage & Backpressure	Double Check Valve Assembly (DC)
Low	Backsiphonage **ONLY**	Hose Bibb Vacuum Breaker (HBVB)
**Low	Backsiphonage **ONLY**	Dual Check Device

**For Non-Industrial meter box installation only. Installation of these devices as well as any other backflow prevention assembly/device will create a closed water system which may result in thermal expansion in the customer's internal water system. Written notification of installation is required (see Policy A, Non-Industrial Connection Protection).

Backflow prevention assemblies/devices shall be provided at any installation as required by the public drinking water system, the Division of Drinking Water, and as required by the adopted Plumbing Code.

F. Assembly Installation Criteria:

Backflow prevention assembly/device installation criteria can also be found in the adopted Plumbing Code.

Backflow prevention assemblies/devices shall be installed to provide at least the degree of protection as dictated by the adopted Plumbing Code.

Prior to the installation of any backflow prevention assembly or device, the owner of the system must be notified that the installation of a backflow prevention assembly/device may create a closed system which could result in a thermal expansion hazard. Under such circumstances, the water system must inform the customer adequately and to the point that the customer understands and assumes responsibility for that phenomenon.

In order to ensure smooth flow characteristics entering and exiting any backflow prevention assembly or device, the approved assembly and/or device will be of an equal line size as to the incoming and outgoing water service line (See Section VI, Policy E-Line Sizing).

Prior to installation, all backflow prevention assemblies/devices, installed under the jurisdiction of the public drinking water system, must appear on the approved list as maintained by the Utah Department of Environmental Quality, Division of Drinking Water, (See Appendix B, List of Approved Backflow Prevention Assemblies/Devices). If any backflow prevention assembly/device which has <u>not</u> been approved is found in use as a primary backflow preventer within the direct jurisdiction of the public drinking water system, that assembly/device must be removed and replaced with a state approved assembly/device.

If an existing backflow prevention assembly is found in operation that at the time of initial installation was on the "approved" list, but is no longer listed, that assembly may remain in operation as long as it passes the required testing. When the assembly can no longer pass the required test, it must be removed from service and be replaced by an approved assembly of an equal or greater degree of protection.

Backflow prevention assemblies and devices must be installed within the following installation criteria:

1. **Air Gap**: Air gap means a physical separation between the discharge end of a drinking water supply pipe and a receiving vessel.

    a. The air gap shall be one inch, or twice (2x) the diameter of the incoming pipe (measured within 10 pipe diameters of the termination of the line), WHICHEVER IS GREATER. This measurement will be taken from the end of the water line to the flood rim of the receptacle or vat (the overflow or drain line will not be construed as the flood rim level).

    b. Where the air gap is within two (2) pipe diameters (horizontal measurement) of a wall or vertical surface, the air gap shall be increased to a minimum of 1.5

inches or to three (3x) times the incoming pipe diameter, WHICHEVER IS GREATER.

c. In any high hazard installation the air gap will be inspected after initial installation and at least annually thereafter by a Certified Backflow Technician.

2. **Reduced Pressure Principle (RP) Backflow Prevention Assembly**:

An RP assembly consists of two (2) independently acting internally loaded check valves, together with a hydraulically operated mechanically independent pressure differential relief valve located between the check valves and below the first check valve, four (4) properly located test cocks and two (2) tightly closing shut off valves.

An RP assembly may be used to protect against a high (health) hazard or low (non health) hazard and against backsiphonage and/or backpressure type backflows.

a. The assembly shall be protected from freezing and vandalism where applicable.

b. The bottom of the RP assembly shall be a minimum of 12 inches above the ground or floor. The assembly owner, when necessary, shall provide devices or structures to facilitate testing, repair, and/or maintenance and to insure the safety of the backflow technician.

c. The body of the RP assembly shall not be closer than 12 inches to any wall, ceiling, or obstacle, and shall be readily accessible for testing, repair and/or maintenance

d. RP assemblies shall NOT be installed in a pit.

e. The relief valve on the RP assembly shall not be directly connected to any waste disposal line, including sanitary sewer, storm drains, or vents.

f. RP assemblies shall be maintained as an intact assembly.

g. The assembly shall be installed in a horizontal position only unless it appears on the Division of Drinking Water Approved Assembly List approved for installation in a vertical orientation.

3. **Double Check Valve (DC) Assembly**:

A DC assembly consists of two (2) independently operating internally loaded check valves, two (2) tightly closing shutoff valves, and four (4) appropriately located test cocks.

A DC assembly may be used to protect against low (non health) hazards only and backsiphonage and/or backpressure backflow conditions.

a. The bottom of the DC assembly shall be a minimum of 12 inches above the ground or floor. The assembly owner, when necessary, shall provide devices or structures to facilitate testing, repair and/or maintenance and to insure the safety of the backflow technician.

b. The body of the DC assembly shall be a minimum of 12 inches from any walls, ceilings, or obstacle and shall be readily accessible for testing, repair and maintenance.

c. If installed in a pit, the DC assembly shall be installed with a minimum of 12 inches of clearance between all sides of the vault including the floor and roof or ceiling with adequate room for testing and maintenance.

d. The DC assembly shall be maintained as an intact assembly.

e. The DC assembly shall be installed in a horizontal position only unless it appears on the Division of Drinking Water Approved Assembly List for installation in the vertical position.

f. The assembly shall be protected from freezing and vandalism where applicable.

4. **Pressure Vacuum Breaker (PVB) Backsiphonage Prevention Assembly**:

A PVB assembly consists of a internally loaded check valve, an internally loaded air inlet valve (poppet) located on the discharge side of the check valve, two (2) tightly closing shut off valves, and two (2) appropriately located test cocks.

A PVB assembly may be used to protect against high (health) hazard or low (non health) hazards, backsiphonage backflow conditions only.

The PVB assembly may be subjected to continuous pressure.

a. The PVB assembly shall not be installed in an area that could be subjected to backpressure or back drainage conditions.

b. The PVB assembly shall be installed a minimum of 12 inches above all downstream piping and the highest point of use.

c. The PVB assembly shall be readily accessible for testing, repair and/or maintenance.

d. The PVB assembly shall not be installed below ground or in a vault or pit.

e. The PVB assembly shall be maintained as an intact assembly.

f. The PVB assembly shall be installed in a vertical position only.

g. The assembly shall be protected from freezing and vandalism where applicable.

5. **Spill-Resistant Pressure Vacuum Breaker (SVB) Backsiphonage Prevention Assembly**:

A SVB assembly consists of an internally loaded check valve, an internally loaded air inlet valve (poppet) located on the discharge side of the check valve, two (2) tightly closing shut off valves, and one (1) appropriately located test cock and one (1) appropriately located bleed/vent valve.

A SVB assembly may be used to protect against high (health) hazard or low (non health) hazards, backsiphonage backflow conditions only.

The SVB assembly may be subjected to continuous pressure.

a. The SVB assembly shall not be installed in an area that could be subjected to backpressure or back drainage conditions.

b. The SVB assembly shall be installed a minimum of 12 inches above all downstream piping and the highest point of use.

c. The SVB assembly shall be readily accessible for testing, repair and/or maintenance.

d. The SVB assembly shall not be installed below ground or in a vault or pit.

e. The SVB assembly shall be maintained as an intact assembly.

f. The SVB assembly shall be installed in a vertical position only.

g. The assembly shall be protected from freezing and vandalism where applicable.

6. **Atmospheric Vacuum Breaker (AVB)**:

An AVB device consists of an air inlet valve (poppet), a check seat and an air inlet port. There are no shut-off valves or test cocks on this type of device.

An AVB may be used to protect against high (health) or low (non health) hazards, backsiphonage backflow conditions only.

a. The AVB shall not be installed in an area that could be subjected to backpressure or back drainage conditions.

b. The AVB shall not be installed where it may be subjected to continuous pressure for more than 12 consecutive hours at any time.

c. The AVB shall be installed a minimum of six (6) inches above all downstream piping and the highest point of use.

d. The AVB shall be installed on the discharge (downstream) side of any valves.

e. The AVB shall be installed in a vertical position only.

f. The assembly shall be protected from freezing and vandalism where applicable.

7. **Hose Bib Vacuum Breaker**:

A Hose Bib Vacuum Breaker device consists of a single internally loaded check valve, atmospheric vents around the device, and an anti-removal device (breakaway set screw, spring threads, etc.).

A Hose Bib Vacuum Breaker may be used to protect against low (non health) hazards only, backsiphonage backflow conditions only, for hose bibs only.

a. The Hose Bib Vacuum Breaker shall be installed with the anti-removal locking device engaged.

8. **Dual Check Valve Device**:

An approved Dual Check Valve device consists of two (2) independently operating, spring loaded check valves.

A Dual Check Valve device may be installed, as a secondary protection method of the drinking water system, within the meter yolk of non-industrial, low hazard connections. All other points of cross connection would then require the isolation method of protection (i.e., lawn sprinkling system, home boiler, etc.).

G. Approved List for Backflow Prevention Assemblies\Devices:

To gain Division of Drinking Water approval for use within a public drinking water system, all backflow prevention assemblies must be in-line serviceable (repairable), in-line testable and have certification through third party certifying agencies. Third party certification will consist of any combination of two (2) laboratory or field test certifications. Acceptable third party laboratory certifying agencies are; ASSE (American Society of Sanitary

Engineers), IAPMO (International Association of Plumbing/Mechanical Officials), and the University of Southern California - Foundation for Cross Connection Control and Hydraulic Research (USC-FCCCHR).

The USC-FCCCHR currently provides the only field testing of backflow protection assemblies.

All backflow prevention devices must have third party certification as mentioned above.

H. Assembly Testing Frequency:

The adopted Plumbing Code and associated amendments, state: "The premise owner or his designee shall have backflow prevention assemblies operation tested at the time of installation, repair, and relocation and at least on an annual basis thereafter, or more frequently as required by the authority having jurisdiction. Testing shall be performed by a Certified Backflow Prevention Assembly Tester."

The Division of Drinking Water has interpreted that code to reflect the initial test to be conducted within ten (10) days of initial usage rather than installation, due to the fact that some installations are not used for up to a full year after the initial installation, wherein an initial test would be meaningless. However, the required "annual" test must be conducted every year after the initial test or more often as determined by the Administrative Authority.

The Public Drinking Water Rules, Section R309-105-12 specifically requires the annual inspection of all high hazard air gaps, and annual testing of reduced pressure principle assemblies, double check valve assemblies, pressure vacuum breaker assemblies, and spill-resistant vacuum breakers using methods acceptable to the Division of Drinking Water (See Appendix C, Approved Assembly Testing Methods), on test report forms that have been approved by the Division (Reference Appendix E, Assembly Test Report Form).

Dual check valve devices that have been installed as a secondary protection should be tested regularly. The Division of Drinking Water recommends testing 10% (random selection) of the installed devices annually.

I. Assembly Repair:

Any certified Class II or III Backflow Technician may inspect and test backflow prevention assemblies.

Should a backflow prevention assembly be in need of repair, the ONLY individuals authorized to repair an assembly are those having appropriate licensure from the Department of Commerce, Division of Professional Licensing with a Backflow Technician Certification (Class II or III), or an agent of the owner.

An "agent of the owner" is defined as a person working for the owner of the

assembly/device and whose job description or normal duties authorize that person to affect repairs within the customers' plumbing system. A commercially available Certified Backflow Technician who inspects and tests backflow prevention assemblies or devices under contract with the owner, is not considered to be an "agent of the owner".

The drinking water system and the consumer both have the option of hiring and maintaining a Certified Backflow Technician within their organization as a permanent member of their staff or having an existing member of their staff become certified, or contracting with a commercially available Certified Backflow Technician to perform inspections and test within their Cross Connection Control Program.

The repair parts used in the repair of an assembly or device shall be equal to the manufacturers originally supplied parts and be authorized by the manufacturer of that particular assembly or device. Should unauthorized repair parts be used within a backflow prevention assembly/device, the person responsible for that repair could be held liable in the case of that assembly or device not passing the subsequent testing sequence, or should a backflow incident occur through that particular assembly or device. This could include criminal as well as civil liability.

J. Assembly Test Reports:

As specified in Section V Standards, Item H, Assembly Testing Frequency, it was noted that all reduced pressure principle assemblies (RPs), double check valve assemblies (DC), pressure vacuum breakers (PVB), and spill-resistant vacuum breakers, are required to be tested within ten (10) days of initial use and annually there after on test reports approved for use by the Division of Drinking Water. A copy of an approved backflow assembly test report form is found in Appendix E, Test Report Form.

Through the backflow technician certification process, every certified backflow technician has been exposed to backflow assembly test report forms and should be aware of the importance of each item contained on the form.

If the backflow assembly test report form is not complete or does not reflect required test data, that report form should be returned to the certified backflow technician for correction.

The backflow assembly test report form must be completed as accurately as possible with all blanks being filled in where applicable and the certified backflow technician must place his signature, certification number and date of the test in a legible manner. The signature of the representative of the assembly owner on the "Certification of Final Performance" portion of the report form is critical so that the technician has documented evidence that the assembly owner or representative is aware of the final performance of the assembly. The backflow technician's signature is required to signify that the assembly has been tested in accordance with the standards.

Upon completion of a backflow assembly test, copies of that report form MUST go to:

1. The public drinking water supplier
2. The customer or owner of the device
3. The certified backflow technician

FAILURE TO SUBMIT THE REQUIRED COPIES TO ANY OF THE ABOVE LISTED PARTIES MAY RESULT IN REVOCATION OF THE TECHNICIANS CERTIFICATION.

These completed test report forms will be maintained as historical documentation within the files of the public drinking water system to reflect the viability of the cross connection control program. They will be subject to inspection by public health officials and/or the Division of Drinking Water to verify accuracy and competence in complying with the cross connection control program. The Division of Drinking Water requires that all backflow assembly test records, location forms, and high hazard air gap inspections be maintained for at least 5 years.

K. Assembly Location Report:

As many backflow prevention assemblies and devices have been installed without anyone being aware of their existence, a "Report of Location of a Backflow Prevention Assembly" form has been designed by the Division so that when these assemblies and devices are discovered, they can be reported to the water purveyor so that the public drinking water system may keep an inventory of the date, location and testing requirements of all backflow prevention assemblies.

Everyone is encouraged to report the location of any pressure vacuum breaker, spill-resistant vacuum breaker, double check valve, and reduced pressure principle assemblies as well as all high hazard air gaps. All location report forms should be submitted to the water purveyor.

VI. POLICIES

A. NON-INDUSTRIAL CONNECTION PROTECTION (APRIL 1987)
Revised January 1996

Due to the number of non-industrial connections within a public drinking water system and the logistical impossibility of requiring each connection to have hose bib vacuum breakers on each hose bib, atmospheric vacuum breakers, spill-resistant vacuum breakers or pressure vacuum breakers installed on all of their sprinkling systems and other points of cross connection, and due to the expense associated with these assemblies, a policy was written to help the public water system protect their distribution systems from possible non-industrial contamination.

Utah Code, Section 19-4-112(2) d, states, "There shall be no cross connections between the

potable and non-potable water systems." This ban on cross connections serves as primary protection of the public drinking water system and therefore, Dual Check Valve Devices used at the meter yoke of a non-industrial connection will be considered secondary protection. Due to the proliferation of cross connections in the non-industrial areas including sprinkling systems supplied from non-potable sources and through the misuse of garden hoses, the installation of protective devices at the meter yoke is highly recommended as an added secondary protection to the drinking water system.

Those non-industrial connections serving buildings of three (3) stories or more (not to include basements) may not utilize a dual check valve device installed at the meter yoke as protection.

After review of manufacturers literature, design drawings and specifications, a dual check valve device (consisting of two independently operating spring loaded components) meeting or exceeding ASSE Standard 1024 contained within the meter yoke is recommended.

If these devices are installed in the meter yokes of non-industrial connections the owners or customer/consumer must be notified in writing that will explain (in non-technical terms) that this installation will create a "closed system" and that a "closed system" could result in a possible "thermal expansion" problem. The water system management must inform the customer adequately and to the point that the customer understands and assumes all responsibility to deal with this problem.

Dual check valve devices installed at the meter, within this policy, should be tested at the rate of 10% of the number installed within the system, on an annual basis, by appropriate personnel on the water utility staff.

Any device installed to meet this policy must meet or exceed ANSI/ASSE Standard 1024, "Dual Check Valve Backflow Preventers."

A single in-line or swing check valve installation cannot be considered adequate for backflow prevention.

B. RESIDENTIAL AND SMALL SPRINKLING SYSTEMS - NON-APPROVED INSTALLATIONS (APRIL 1989):
Revised January 1996

As referenced in Section VI, Policies Paragraph A, Non-Industrial Connection Protection, the logistical problems encountered by public drinking water systems concerning residential and small sprinkling systems have made it virtually impossible to enforce the adopted Plumbing Code, wherein it states that; “The potable water supply to lawn irrigation systems shall be protected against backflow by an atmospheric-type vacuum breaker, a pressure-type vacuum breaker or a reduced pressure principle backflow preventer”.

Many lawn sprinkling system installers, as well as homeowners who have installed their

own sprinkling systems, have been installing dual check valve devices in the supply line of the lawn sprinkler system on the downstream side of the "stop and waste" valve, either in a vault or at times burying these devices and considered this as adequate protection. **THIS IS NOT TO BE DEEMED ADEQUATE PROTECTION. THIS IS AN ILLEGAL INSTALLATION.**

If a double check (DC) valve assembly has been installed (prior to 2006) as backflow prevention on a lawn sprinkling system, it may be above ground or placed in a vault. Vaults require a minimum 12-inch clearance from floor, ceiling or access lid and walls, to enable adequate inspection, testing, and repair of that assembly. As these assemblies are discovered, they should be inspected carefully by the local jurisdiction's Hazard Assessment Official to verify there is no hazard downstream of this assembly requiring an increased level of protection. If the local jurisdiction determines that the installation requires an increased level of protection, the DC shall be removed and replaced with protection required by the current adopted Plumbing Code and associated amendments.

If the assembly has been damaged in any manner which is NOT repairable to factory specifications, it shall be removed and replaced with protection required by the current adopted Plumbing Code and associated amendments. The local jurisdiction may require an increased level of protection by adoption of a local ordinance or authority.

C. DUAL SOURCE SPRINKLING SYSTEMS (DECEMBER 1988):
Revised January 1996

Due to the ever increasing popularity of sprinkling systems (non-residential and residential) being fed by, both non-potable pressurized irrigation systems and the public drinking water system, the following policy has been adopted within the Cross Connection Control Program of Utah:

Primary protection of the drinking water system used as backup to a non-potable pressurized irrigation system shall be through an approved air gap above a receptacle which would then utilize a booster pump to repressurize the water supply back into the sprinkling system; OR

A "swing connection" installed so that EITHER the pressurized irrigation system OR the drinking water system is feeding the sprinkling system (only one water supply can be connected at any time), AND a reduced pressure principle assembly (RP) must be installed on the drinking water system immediately upstream of the "swing connection", to protect the drinking water from any residual contamination from the irrigation water or the sprinkling water system from entering the drinking water system.

D. INSTALLATION OF NON-APPROVED ASSEMBLIES/DEVICES (OCTOBER 1985):

Should a backflow prevention device or assembly, which has not been approved be installed as the primary protection of the drinking water system, regardless of the degree of

hazard, that unapproved assembly/device must be removed from service and replaced with an approved assembly/device that is listed on the current approved listing of the state.

E. LINE SIZING (APRIL 1989):

The installation criteria for each type of approved backflow prevention assembly and device has been specified in Section V Standards. Paragraph F Assembly Installation Criteria, and also in the adopted Plumbing Code. This installation criteria MUST be adhered to at all times.

In order to insure smooth flow characteristics entering and exiting any backflow prevention assembly or device, the following policy will be adhered to:

The installation of any approved backflow prevention assembly and/or device will be of equal size as the incoming pipe diameter (upstream) as the assembly or device and will also be equal to the outgoing pipe diameter (downstream).

Should this installation criteria be impossible to be adhered to because of line sizes, pipe types, construction, or demand flows, the following modification may be made:

1. The incoming pipe diameter (upstream) must be the same size (nominal size) as the backflow prevention assembly for a minimum of ten (10) pipe diameters upstream (in front of) the assembly or device.

2. The outgoing pipe diameter (downstream) must be the same size (nominal size) as the assembly and/or device for a minimum of three (3) pipe diameters downstream (in back of) assembly or device.

Example: incoming (upstream) line size: 4" - backflow prevention assembly size: 2" - outgoing (downstream) line size: 4". The incoming line upstream must be reduced to a 2" line size a minimum of 20" (10 x 2") prior to the installation of the assembly, and the downstream line must be reduced to 2" for a distance of 6" (3 x 2") before it is up sized to the downstream line size of 4".

F. CONTAINMENT VS. ISOLATION TECHNIQUES (OCTOBER 1985):
Revised January 1996

The public drinking water system is charged with the responsibility of protecting the quality of the water it delivers to its consumers from the source of supply to the customers' meter or property line. Therefore, in consideration of a cross connection control program, the water purveyor should consider **containment-meter protection as a minimum standard of protection** for the public drinking water system. Isolation-plumbing code compliance allows protection to the last free flowing tap and is the recommended level of protection, but in many cases is beyond the jurisdiction of the public drinking water system.

CONTAINMENT-METER PROTECTION: Installing an approved backflow

prevention assembly/device, commensurate to the highest degree of hazard found within the customers' water system, on the incoming service line prior to any other connections going to any other uses. This technique will protect the main distribution system from any contamination from the consumer/customer, however, this type of technique will not protect the people within the building or the private plumbing system from a cross connection or backflow incident within the customers own plumbing system.

ISOLATION-PLUMBING CODE COMPLIANCE: Installing an approved backflow prevention assembly/device commensurate to the degree of hazard at each point of cross connection within the customers' distribution system. This type of technique will involve more backflow prevention devices and assemblies. It will also require more involvement of the public drinking water officials, plumbing officials, and backflow technicians within the customers' water system so they may inspect for compliance at every point of cross connection, and to also ensure that each of the testable backflow prevention assemblies (RPs, DCs, PVBs, SVBs) are being tested within the annual guidelines (or more often as needed). This type of technique does, in fact, protect those within the customers' water system from any type of contamination as well as protecting the public drinking water system.

For compliance with the State program, containment methodology will be considered the minimum standard of protection. However, at the public water systems discretion, both containment and/or isolation may be used within the same facility as long as the minimum protection required by the adopted Plumbing Code is adhered to.

G. PRIVATELY-OWNED DRINKING WATER WELLS:

Privately-owned drinking water wells such as those serving a single family residence shall not be considered as non-potable (irrigation/secondary) water systems. However, since these wells have not been evaluated and approved for public drinking water sources, should the public water purveyor allow a connection between the two systems, the public drinking water system must be protected by the installation of an approved reduced pressure principle assembly (see section V Standards, Paragraph F, Assembly Installation Criteria).

Appendix A

Model Local

Ordinance

****

THIS IS A MODEL ORDINANCE ONLY, AND SHOULD NOT BE CONSTRUED TO BE LAW OR REGULATION UNTIL ADOPTED BY THE ELECTED OFFICIALS OF THE WATER SYSTEM.

****

MODEL ORDINANCE

for the

CONTROL OF BACKFLOW AND CROSS CONNECTIONS

SECTION 1 CROSS CONNECTION CONTROL---GENERAL POLICY

1.1 Purpose of Ordinance:

1.1.1 To protect the Public drinking water supply of ___(city or water utility)_ from the possibility of contamination or pollution by requiring compliance with the Utah Public Drinking Water Rules (UPDWR) and the Plumbing Code, as adopted by the State of Utah, require a cross connection control protection of all public drinking water systems in the State of Utah. Compliance with these minimum safety codes will be considered reasonable diligence for the prevention of contaminants or pollutants which could backflow into the public drinking water system; and,

1.1.2 To promote the reasonable elimination or control of cross connections in the plumbing fixtures and industrial piping system(s) of the consumer, as required by the state regulations and plumbing code to assure water system safety; and,

1.1.3 To provide for the administration of a continuing program of backflow prevention which will systematically examine risk and effectively prevent contamination or pollution of the drinking water system?

1.2 Responsibility: Drinking Water Purveyor

1.2.1 ____(city or water utility)_____ shall be responsible for the protection of the drinking water distribution system from the foreseeable conditions leading to the possible contamination or pollution of the drinking water system due to the backflow of contaminants or pollutants into the drinking water supply.

1.2.2 Drinking water system surveys/inspections of the consumer's water distribution system(s) shall be conducted or caused to be conducted by individuals deemed qualified by and representing____(city or water utility)___. Survey records shall indicate compliance with the State of Utah Regulations. All such records will be maintained by _____(city or water utility)_.

1.2.3 __(City or water utility)_____ shall schedule and notify in writing, all consumers of the need for the periodic system survey to insure compliance with existing

applicable minimum health and safety standards.

1.2.4 Selection of an approved backflow prevention assembly for containment control required at the service entrance shall be determined from the results of the system survey.

1.3 Responsibility: Consumer

1.3.1 To comply with this ordinance as a term and condition of water supply and consumer's acceptance of service is admittance of his/her awareness of his/her responsibilities as a water system user.

1.3.2 It shall be the responsibility of the consumer to purchase, install, and arrange testing and maintenance of any backflow prevention device/assembly required to comply with this ordinance. Failure to comply with this ordinance shall constitute grounds for discontinuation of service.

1.4 Responsibility: Plumbing Official

1.4.1 The plumbing official's responsibility to enforce the applicable sections of the plumbing code begins at the point of service (downstream or consumer side of the meter) and continues throughout the length of the consumer's water system.

1.4.2 The plumbing official will review all plans to ensure that unprotected cross connections are not an integral part of the consumer's water system. If a cross connection cannot be eliminated, it must be protected by the installation of an air gap or an approved backflow prevention device/assembly, in accordance with the adopted Plumbing Code.

1.5 Responsibility: Certified Backflow Technician, Surveyor, or Repair Person

1.5.1 Whether employed by the consumer or a utility to survey, test, repair, or maintain backflow prevention assemblies the Certified Backflow Technician, Surveyor, or Repair Person will have the following responsibilities:

a. Insuring that acceptable testing equipment and procedures are used for testing, repairing or overhauling backflow prevention assemblies.

b. Make reports of such testing and/or repairs to the consumer and the water purveyor on form approved for such use by the water purveyor within time frames as described by the Division of Drinking Water.

c. Include the list of materials or replacement parts being used on the reports.

d. Insuring that replacement parts are equal in quality to parts originally supplied by the manufacturer of the assembly being repaired.

e. Not changing the design, material or operational characteristics of the assembly during testing, repair or maintenance.

f. Performing all test of the mechanical devices/assemblies and shall be responsible for the competence and accuracy of all test and reports.

g. Insuring that his/her license is current, the testing equipment being used is acceptable to the State of Utah, and is in proper operating condition.

h. Being equipped with, and competent to use, all necessary tools, gauges, and other equipment necessary to properly test, and maintain backflow prevention assemblies.

i. Tagging each double check valve, pressure vacuum breaker, reduced pressure backflow assembly and high hazard air gap, showing the serial number, date tested and by whom. The certified technician's license number must also be on the tag.

1.5.2 Responsibility: Repair of backflow assemblies
In the case of a consumer requiring an assembly to be tested, any currently Certified Backflow Technician is authorized to make the test and report the results to the consumer and the water purveyor. The installation, replacement or repair of assemblies must be made by a tester having appropriate licensure from the Department of Commerce, Division of Occupational and Professional Licensing, except when the Backflow Technician is an agent of the assembly owner.

SECTION 2. DEFINITIONS

2.1 Water Purveyor: The person designated to be in charge of the Water Department of (city or water utility), is invested with the authority and responsibility for the implementation of an effective cross connection control program and for the enforcement of the provisions of this ordinance.

2.2 Approved Backflow Assembly: An assembly accepted by the Utah State Department of Environmental Quality, Division of Drinking Water, as meeting an applicable specification or as suitable for the proposed use.

2.3 Auxiliary Water Supply: Any water supply on or available to the premises other than the purveyor's public water supply will be considered as an auxiliary water supply. These auxiliary waters may include water from another purveyor's public potable water supply or any natural source(s) such as a well, spring, river, stream, etc., or "used waters" or "industrial fluids". These waters may be contaminated or polluted or they may be objectionable and constitute an unacceptable water source over which the water purveyor does not have authority for sanitary control.

2.4 Backflow: The reversal of the normal flow of water caused by either back-pressure or back-siphonage.

2.5 Back-Pressure: The flow of water or other liquids, mixtures, or substances from a region of high pressure to a region of lower pressure into the water distribution pipes of a potable water supply system from any source(s) other than the intended source.

2.6 Back-Siphonage: The flow or water or other liquids, mixtures, or substances under vacuum conditions into the distribution pipes of a potable water supply system from any source(s) other than the intended source, caused by the reduction of pressure in the potable water system.

2.7 Backflow Prevention Assembly: An assembly or means designed to prevent backflow. Specifications for backflow prevention assemblies are contained within the Plumbing Code, as adopted by the State of Utah and in the Cross Connection Control Program for Utah maintained by the Division of Drinking Water.

2.8 Contamination: Means a degradation of the quality of the potable water supply by sewage, industrial fluids or waste liquids, compounds or other materials that may create a health hazard.

2.9 Cross Connection: Any physical connection or arrangement of piping or fixtures which may allow non-potable water or industrial fluids or other material of questionable quality to come into contact with potable water inside a water distribution system. This would include temporary conditions, such as swing connections, removable sections, four way plug valves, spools, dummy sections of pipe, swivel or change-over devices or sliding multiport tubes or other plumbing arrangements.

2.10 Cross Connection - Controlled: A connection between a potable water system and a non-potable water system with an approved backflow prevention assembly properly installed and maintained so that it will continuously afford the protection commensurate with the degree of hazard.

2.11 Cross Connection - Containment: The installation of an approved backflow assembly at the water service connection to any customer's premises where it is physically and economically infeasible to find permanently eliminate or control all actual or potential cross connections within the customer's water distribution system; or, it shall mean the installation of an approved backflow prevention assembly on the service line leading to and supplying a portion of a customer's water system where there are actual or potential cross connections which cannot be affectively eliminated or controlled at the point of the cross connection (isolation).

SECTION 3 REQUIREMENTS

3.1 Policy:

3.1.1 No water service connection to any premises shall be installed or maintained by the Water Purveyor unless the water supply is protected as required by State laws, regulations, codes, and this ordinance. Service of water to a consumer found to be in violation of this ordinance shall be discontinued by the water purveyor after

due process of written notification of violation and an appropriate time suspense for voluntary compliance, if:

a. A backflow prevention assembly required by this ordinance for the control of backflow and cross connections is not installed, tested, and maintained, or

b. If it is found that a backflow prevention assembly has been removed or by-passed, or

c) If an unprotected cross connection exist on the premises, or

d) If the periodic system survey has not been conducted.

Service will not be restored until such conditions or defects are corrected.

3.1.2 The customer's system(s) shall be open for inspection at all reasonable times to authorized representatives of the water purveyor to determine whether cross connections or other structural or sanitary hazards, including violation of this ordinance exist and to audit the results of the required survey (R309-400 of the Utah Administrative Code).

3.1.3 Whenever the public water purveyor deems a service connection's water usage contributes a sufficient hazard to the water supply, an approved backflow prevention assembly shall be installed on the service line of the identified consumer's water system, at or near the property line or immediately inside the building being served; but, in all cases, before the first branch line leading off the service line.

3.1.4 The type of protective assembly required under subsection 3.1.3, shall depend upon the degree of hazard which exist at the point of cross connection (whether direct or indirect), applicable to local and state requirements or resulting from the required survey.

3.1.5 All presently installed backflow prevention assemblies which do not meet the requirements of this section but were approved assemblies for the purposes described herein at the time of installation and which have been properly maintained, shall, except for the inspection and maintenance requirements under subsection 3.1.6, be excluded from the requirements of these rules so long as the water purveyor is assured that they will satisfactorily protect the public water system. Whenever the existing is moved from the present location or, requires more than minimum maintenance or, when the water purveyor finds that the operation or of this assembly constitutes a hazard to health, the unit shall be replaced by an approved backflow prevention assembly meeting all local and state requirements.

3.1.6 It shall be the responsibility of the consumer at any premises where backflow prevention assemblies are installed to have certified surveys/inspections, and operational test made at least once per year at the consumer's expense. In those instances where the Public Water Purveyor deems the hazard to be great, he may required certified surveys/inspections and test at a more frequent interval. It shall be the duty of the purveyor to see that these tests are made according to the standards set forth by the State Department of Environmental Quality, Division of Drinking Water.

3.1.7 All backflow prevention assemblies shall be tested within ten (10) working days of initial installation.

3.1.8 No backflow prevention assemblies shall be installed so as to create a safety hazard. Example: Installed over an electrical panel, steam pipes, boilers, or above ceiling level.

3.2 Violations of this Policy:

If violations of this ordinance exist or if there has not been any corrective action taken by the consumer within ten (10) days of the written notification of the deficiencies noted within the survey or test results, then the water purveyor shall deny or immediately discontinue service to the premises by providing a physical break in the service line until the customer has corrected the condition(s) in conformance with all State and local regulations and statutes relating to plumbing, safe drinking water suppliers, and this ordinance.

****

THIS IS A MODEL ORDINANCE ONLY, AND SHOULD NOT BE CONSTRUED TO BE LAW OR REGULATION UNTIL ADOPTED BY THE ELECTED OFFICIALS OF THE WATER SYSTEM.

****

****

THIS IS A MODEL ORDINANCE ONLY, AND SHOULD NOT BE CONSTRUED TO BE LAW OR REGULATION UNTIL ADOPTED BY THE ELECTED OFFICIALS OF THE WATER SYSTEM.

****

SAMPLE ORDINANCE

The purpose of this (ordinance/policy) is to protect the water supply of (city or water company) from contamination or pollution from any cross connections existing or potential; and to assure that approved backflow prevention assemblies are tested when put into service and at least on an annual basis thereafter. This ordinance is in compliance with Section R309.105.12 of the Utah Public Drinking Water Rules (UPDWR) and the Plumbing Code as adopted by the State of Utah.

The installation or maintenance of any unprotected cross connection which would endanger the water supply of (city or water company) is prohibited. Any such cross connection now existing or hereafter installed is hereby declared unlawful and shall be immediately protected or eliminated.

The control or elimination of cross connections and the criteria for determining degree of hazard and prescribing appropriate levels of protection shall be in accordance with the Plumbing Code and the UPDWR. Water service to any premise shall be contingent upon the customer providing appropriate cross connection control if determined necessary. Determinations and enforcement shall be the responsibility of (job title or department) in conjunction with (city or county plumbing/building inspector). Water service may be refused or terminated to any premises where an unprotected cross connection may allow contamination or pollutants to backflow into the public drinking water system.

Authorized employees of (city or water company) with proper identification, shall have free access at reasonable hours of the day, to all areas of a premise or building to which drinking water is supplied for the purpose of conducting hazard assessment surveys. Water service may be refused or terminated, or maximum backflow protection may be required, to the premise where access to perform surveys is denied, where unprotected cross connections are located, or in the event that installed assemblies are not tested and maintained as required by State and local regulations.

Before any water service is terminated, a due process of notifying the customer and providing a reasonable time for compliance to be achieved will be observed according to the operating procedures of (city or water company). However, in the event of an actual backflow incident which endangers the public health, water service may be terminated immediately and not be restored until the cross connection is either eliminated or adequately protected.

****

THIS IS A MODEL ORDINANCE ONLY, AND SHOULD NOT BE CONSTRUED TO BE LAW OR REGULATION UNTIL ADOPTED BY THE ELECTED OFFICIALS OF THE WATER SYSTEM.

****

****

THIS IS A MODEL ORDINANCE ONLY, AND SHOULD NOT BE CONSTRUED TO BE LAW OR REGULATION UNTIL ADOPTED BY THE ELECTED OFFICIALS OF THE WATER SYSTEM. Available electronically upon request.

****

SYSTEM NAME & SYSTEM #

CROSS CONNECTION CONTROL POLICY

A policy relating to "cross connection control and backflow-prevention control" at the *Name or Address of facility*.

PART I:

CROSS CONNECTION CONTROL AND BACKFLOW PREVENTION

(I)It shall be against *company name* policy, at any connection applied with water from the *System name* distribution system, to do any of the following:

(a) To install or use any physical connection or arrangement of piping or fixtures, which may allow any fluid or substances unsuitable for human consumption to enter the potable water distribution system, as required by Section 608.1 through 608.5 of the International Plumbing Code.

(b) To install any connection, arrangement, or fixtures without Backflow Prevention Device or Assembly unless approved otherwise by the *specify by job title.*

(c) To incorrectly install any Backflow Prevention Device or Assembly required by Section 608-.6 and 608.1 of the International Plumbing Code.

(2) Any person found in violation of this policy shall be subject to reprimand or other appropriate disciplinary action as determined by the *specify by job title.*

(3) Administration of this policy shall be referenced by "Cross Connection Control Program of Utah, November 2003 (Guidelines Reference)". A copy of the manual shall be available at the office of the *specify location of office.*

(4) Backflow prevention assemblies required by this policy will be required to be tested at least annually. The *specify by job title* shall prepare and maintain a Backflow Assembly Information sheet on all such devices and Test results shall be maintained for a period of no less than five (5) years.

PART II

This policy shall take effect on *Date*. A copy of the policy shall be placed *specify location* and will be reviewed for all new construction projects on a case by case basis.

Signed:_____

Date:_____

Title:_____

****

THIS IS A MODEL ORDINANCE ONLY, AND SHOULD NOT BE CONSTRUED TO BE LAW OR REGULATION UNTIL ADOPTED BY THE ELECTED OFFICIALS OF THE WATER SYSTEM.

****

APPENDIX B

APPROVED BACKFLOW PREVENTION

ASSEMBLIES / DEVICES

UTAH DEPARTMENT OF ENVIRONMENTAL QUALITY

DIVISION OF DRINKING WATER

CROSS CONNECTION CONTROL PROGRAM

MARCH 2010

FOR CONTAINMENT PURPOSES ONLY

Please go to the website listed below to see a complete list of Approved Backflow Prevention Assemblies/Devices.

http://www.drinkingwater.utah.gov/documents/compliance/AppendixB_1-17-08.pdf

Appendix C

Approved Assembly

Testing Methods

Reference:

Field Test Procedures for Backflow Prevention Assemblies

Backflow Prevention Assembly Tester Certification Program

As adopted by:

American Backflow Prevention Association

Contact:
Mr. Ernest Havlina, Administrator
ABPA Backflow Prevention Assembly Tester Certification Program
P.O. Box 3051
Bryan, TX 77805-3051
Phone/Fax (877) 227-2127

Michael Moss
State of Utah DEQ/DDW
Backflow Tester Certification Program
Phone (801) 536-0089

Appendix D

List of Acceptable Testing Equipment

Gages and Manufacturers

Manufacturer	*Differential Gage*
Apollo Valves/Conbraco Industries, Inc. P.O. Box 247 Matthews, NC 28106 (704) 841-6000 FAX (843) 672-1648	Model 40-200-TKU, 40-200-TK5U
Astra PO Box 888 3525 Old Conejo Road, Suite 104 Newbury Park, CA 91320 (800) 776-1464 FAX (805) 499-9084	ProMaster-Model ASRP-4
Cameron (Formerly Prime Measurement, ITT Barton) Measurement Systems Division Industrial Products 4040 Capitol Avenue City of Industry, CA 90601 (562) 222-8440 FAX (562) 222-8446	Barton- Model 226, 227, 246, 247, 226C, 227C, 246C, 247C
Danfoss Flomatic Corporation 15 Pruyn's Island Drive Glen Falls, NY 12801-4421 (518) 761-9797 FAX (518) 761-9798	Model TK1
Duke PO Box 16007 Irvine, CA 92713 (714) 581-7200 FAX (714) 552-9368	Model 75, 75B, 100, 1000, EZ900
FEBCO 3816 S. Willow Ave Fresno, CA 93725 Phone: (559) 441-5300 Fax: (559) 441-5301	Model TK845-5
Meriam Instrument 10920 Madison Avenue Cleveland, OH 44102 (216) 281-1100 FAX (216) 281-0228	Model 1124

Gages and Manufacturers

Manufacturer	*Differential Gage*
Mid-West Instrument 6500 Dobry Drive Sterling Heights, MI 48314 (810) 254-6500 FAX (810) 254-6509	Model 830, 835, 845-2, 845-3, 845-5
Watts Regulator Company 815 Chestnut Street North Andover, MA 01845 (508) 688-1811 FAX (508) 794-1848	Model TKDR, TKDP, TK99D
Wilkins Regulator Company 1747 Commerce Way Paso Robles, CA 93446 (805) 238-7100 FAX (805) 237-3969	Model TG-3, TG-5

September, 2007

Appendix E

Assembly Test Report Form

Backflow Assembly Test Report

Water System Name: _____ File No.: _____
Location of Assembly: _____
Owner of Assembly: _____
Address: _____ City: _____ State: _____ Zip: _____
Size of Assembly: _____ Model No.: _____ Serial No.: _____
Name of Assembly Manufacturer: _____

		Check Valve #1	Check Valve #2	Differential Pressure Relief Valve	Pressure Vacuum Breaker
INITIAL	RP	PSI Across _____	PSI Across _____	Opened at _____# Opened Under 2# or did not open ☐	AIR INLET: Opened at _____ # Opened Under 1# or did not open ☐
	DC	Closed Tight ☐ Leaked ☐	Closed Tight ☐ Leaked ☐		CHECK VALVE: Closed Tight ☐ Leaked ☐
REPAIRS		Cleaned ☐ Replaced: Disc ☐ Spring ☐ Guide ☐ Pin Feather ☐ Hingepin ☐ Seat ☐ Diaphragm ☐ Other (describe) ☐	Cleaned ☐ Replaced: Disc ☐ Spring ☐ Guide ☐ Pin Feather ☐ Hingepin ☐ Seat ☐ Diaphragm ☐ Other (describe) ☐	Cleaned ☐ Replaced: Disc ☐ Spring ☐ Diaphragm ☐ Seat(s) ☐ O-ring(s) ☐ Module ☐ Other (describe) ☐	Cleaned ☐ Replaced: Air Inlet Disc ☐ Air Inlet Spring ☐ Check Disc ☐ Check Spring ☐ Other (describe) ☐
FINAL TEST		PSI Across Closed Tight ☐	PSI Across Closed Tight ☐	Opened at ____ # Reduced Pressure	Satisfactory ☐

Initial Test By: _____ Certification No.: _____ Date: _____
Repaired By: _____ Date: _____
Final Test By: _____ Certification No.: _____ Date: _____

This assembly's INITIAL TEST performance was: Satisfactory ☐ Unsatisfactory ☐
This assembly's FINAL TEST performance was: Satisfactory ☐ Unsatisfactory ☐

I certify the above test has been performed and I am aware of the final performance.
BY: _____ Assembly Owner Representative

Distribution: White - Assembly Owner ☐ Pink – Tester ☐ Canary – Water Utility

State of Utah
Department of Environmental Quality
Division of Drinking Water

Utah
Water Operator
Certification Program

Inside this booklet . . .
- 2013 Certification Exam Dates
- Official Utah Exam Application

Key Features of the Program . . . . . p. 1
How Do I Become A Certified Operator? . . . . . p. 2
Nervous About the Exam? We Can Help . . . . . p. 4
What Are Continuing Education Units? . . . . . p. 5
Operator Certification Commission. . . . . p. 6
2013 Certification Exam Dates . . . . . p. 7
Training Events Calendar Online. . . . . p. 8
Utah Operator Certification Rules Summary . . . . p. 9

FOREWORD

The Utah Drinking Water Board takes great pride in our program to certify operators of public drinking water systems. We hope that the information contained in this brochure assists you to understand and appreciate this basic public health program.

Utah's Operator Certification Program progressed from a *voluntary* to a *required* certification system in 1983 with the passage of amendments to the Utah Safe Drinking Water Act by the Utah Legislature. Rules concerning the certification of drinking water system operators within the state have been written, reviewed, revised, approved and implemented. These rules detail the requirements for, and the renewal of, certification.

The Utah Drinking Water Board appreciates the genuine hard work of the Operator Certification Commission, Division of Drinking Water staff, and the drinking water system operators and managers throughout Utah. Through our combined efforts, program implementation has been smooth and most impressive.

Thank you for your continued support of the program and your dedication to safe drinking water.

Utah Drinking Water Board

Utah Department of Environmental Quality, Drinking Water Board members:

Paul Hansen, Chair
Kenneth Bassett, Vice-Chair
Terry Beebe
Russell Donoghue
Daniel Fleming
Tage Flint
Heather Jackson
Betty Naylor
Amanda Smith
David K. Stevens, Ph.D.
James Webb
Kenneth H. Bousfield, Executive Secretary

Key Features of the Utah Operator Certification Program

- The Utah Operator Certification Rules are established to promote use of trained, experienced, and efficient personnel in charge of public waterworks and to establish standards whereby operating personnel can demonstrate competency to protect the public health through proficient operation of waterworks facilities.

- Utah's Operator Certification Program is authorized by Section R309-105-11 of the Utah Public Drinking Water Rules. The rules state that "All community and nontransient noncommunity water systems or any public system that employs treatment techniques for surface water or ground water under the direct influence of surface water shall have an appropriately certified operator. Refer to Section 309-300, Certification Rules for Water Supply Operators, for specific requirements."

- All public drinking water systems within the state of Utah have been assigned a complexity level (I, II, III, IV) and discipline (Treatment or Distribution) for the certification requirements of their operators. Any operator who makes independent decisions that affect the sanitary quality, safety, and adequacy of the water to their system will need to be certified to the grade of the system.

- Attendance at approved training such as workshops, seminars, classes, etc., is required for the renewal of certificates every three years.

- When an operator who is "in charge" of a drinking water system leaves that particular employment, the water system management or city/town council must notify the Operator Certification Program of this change within 10 days of the operator's departure, and replace the departing operator with an appropriately certified operator within one year.

- Should several neighboring drinking water systems wish to work together, they may hire a "regional operator" who may be "in charge" of several drinking water systems; thereby, reducing the costs of having a certified operator for each drinking water system.

- Should someone other than an operator, or an individual who is seeking employment with a Utah drinking water system (consultants, design engineers, salespersons, etc.), wish to become certified, they may take the certification examination and be issued a "Specialist Certificate." This certificate does not allow a "Specialist" to actually operate a drinking water system.

- Program ONLINE SERVICES offer all forms and applications needed for Examination, Renewal, Conversion, Reciprocity, Reinstatement, CEU submittal, and Citizenship Verification. All fees are payable online with a credit card. The system will accept Visa, MasterCard, American Express, and Discover, or you can pay by Virtual Check. Visit the program's website at: http://www.drinkingwater.utah.gov.

- Internet ONLINE water operator certification exams are now being offered throughout the year by the Rural Water Association of Utah (RWAU), by appointment only.

FOR MORE INFORMATION about this program, or to obtain copies of program forms, please contact the Division of Drinking Water office at (801) 536-4200 and ask for an Operator Certification Program staff member.

How Do I Become A Certified Operator?

By Utah law, all community and nontransient noncommunity water systems or any public system that employs treatment techniques for surface water or ground water under the direct influence of surface water shall have an appropriately certified operator in direct responsible charge of the system.

If you are an individual looking for employment within the drinking water industry in the state of Utah, you may become certified as an operator.

The only way to become certified is by taking a written exam, an internet online exam or an oral exam, or currently be certified as an operator in another state and apply for reciprocity. Certification is divided into two disciplines:

Distribution: There are five grade levels within the distribution discipline (small system, and I, II, III, IV)

Treatment: There are four grade levels within the treatment discipline (grades I, II, III, IV).

DETAILED BREAKDOWN OF EXAMINATION COVERAGE

The examinations offered in water distribution and water treatment can be categorized according to the level of ability and competency of the operator expected to take these exams.

Small System - This level is for persons running a very small system with a population of 25-500. A volunteer or elected official usually runs these community or nontransient noncommunity systems.

Grade I - This level is for persons running small systems or slow-sand filter, reverse osmosis, or similar types of small treatment facilities.* The operator at this level in a larger system will generally be closely supervised.

Grade II - This level is for persons running a system with a population of 1,500 to 5,000, or small package-type treatment plants.* This corresponds to a "lead" level position. Through experience and education, the operator has demonstrated himself independently competent in most basic tasks.

Grade III - This level is for persons running a system with a population of 5,000 to 20,000 or medium size treatment plants.* This corresponds to a "journeyman" level position and the person generally supervises and instructs others. They can, without direct supervision, operate and maintain all but the most complex systems.

Grade IV - This level is for persons running a system serving over 20,000 population or large treatment plants or plants with complex operational processes.* This level corresponds to the highest level currently available under the Utah program. It identifies that the person has demonstrated knowledge of the most complex portions of water system operation. The Grade IV operator routinely supervises work crews or groups of work crews. Budget preparation is frequently a duty. It is assumed that a person certified at this level has enough experience and education to operate any other water system serving more than 20,000 people, in compliance with the Utah Public Drinking Water Rules and laws of the state of Utah.

---

*Treatment plants are rated on population served, degree of treatment, and complexity of operational processes.

HOW TO APPLY FOR AN EXAM

The operator certification exams are offered twice a year, in the months of April and November, at 16 sites throughout the state of Utah. (Note: The Rural Water Association of Utah (RWAU) sponsors additional exams in March and September in conjunction with their annual conferences; and RWAU also offers **internet online exams** throughout the year by appointment only.) To apply for participation within the exam cycle, you need to submit an official exam application on or before the application deadline. The application must include the exam fee of $100.00. Late applications and applications received without the required fee will not be accepted.

After your application is processed, you will receive a confirmation letter containing the exact date, time and location of the exam, and the items you will need to have with you during the exam.

The exam contains 100 multiple-choice questions. You will be tested on the following drinking water-related subjects: Math, operation and maintenance, pumps, chemical feed, rules, safety and security. You will be given three hours to complete the exam. A score of 70 is required to pass the exam.

Certain experience requirements need to be met to obtain an "unrestricted" certificate. If you do not meet these requirements or if you are new in the drinking water industry, and you pass the exam, a "restricted" certificate will be issued. A "restricted" certificate signifies that you have passed the exam, but you lack the experience required by the Operator Certification Rules.

Upon successful completion of the exam you will be notified in writing of your score and will be issued a certificate indicating the discipline and grade level.

This certificate will be active for a three-year period. A reminder letter of renewal will be sent out three to six months prior to the expiration date of your certificate. The Utah Operator Certification Rules require that CEUs (continuing education units) be acquired by the operators to enable the certificate to be renewed.

Individuals with special needs must schedule a separate, private exam date and time. "In compliance with the American Disabilities Act, individuals with special needs (including auxiliary communicative aids and services) should contact Brooke Baker, Office of Human Resources, at: (801) 536-4412, TDD (801) 536-4424, at least five working days prior to the scheduled meeting."

Division of Drinking Water
Operator Certification Program
195 North 1950 West
P.O. Box 144830
Salt Lake City, Utah 84114-4830
Phone: 801-536-4200
Fax: 801-536-4211
E-mail: mhand@utah.gov OR
kdyches@utah.gov
Website: http://www.drinkingwater.utah.gov

Nervous About the Certification Exam?
We Can Help!

Training Events Calendar

There are several self-paced courses available, as well as formal organized training by the Rural Water Association, American Water Works Association, Utah Valley State College, Water Environment Association of Utah, and the Division of Drinking Water. A water operator training calendar is available online:

http://www.calendarwiz.com/uwwtccal OR
http://www.drinkingwater.utah.gov/for_certified_operators.htm

Lending Library

There is also a library available for your use at our office. We have reference books, state rules documents, videos, CDs and DVDs for water system personnel and anyone preparing for the certification exam. By filling out a library application, you can borrow these items at no charge.

If you have any questions about training or training material, please contact the Operator Certification Program staff at (801) 536-4200.

Check out the
LENDING LIBRARY
Call the Operator Certification Program staff
at (801) 536-4200 for details

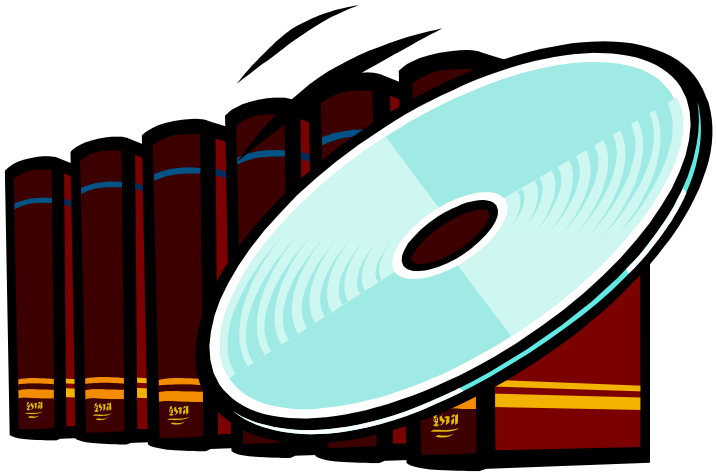

What Are Continuing Education Units (CEUs)?

The Operator Certification Rules define a CEU as "...ten contact hours of participation in, and successful completion of an organized and approved continuing education experience with responsible sponsorship, capable direction, and qualified instruction."

In order to ensure that the certified operators within the state remain abreast of the technological advances within our water industry, CEUs are required in order for the operators to renew their certificates. This includes operators holding "Grandparent" certificates.

The Operator Certification Rules specify the number of CEUs required per grade for renewal:

Level of Certification	CEUs required within a three-year period
Small System	2.0
Grades I and II	2.0
Grades III and IV	3.0

There is no distinction between distribution and treatment disciplines when it comes to CEUs, only the grade of the certification the operator currently holds.

CEUs can only be acquired by attending pre-approved workshops, seminars, training, and classes which have been designed to keep the operator abreast of current water supply practices as well as all new changes within the regulations and industry standards. An attendance roster from these workshops is sent to the Operator Certification Program for entry into the computer base for tracking purposes.

Upon receiving an "application for renewal," the Division of Drinking Water's computer is checked to make sure enough CEUs have been acquired by the operator to enable him to renew his certificate. If that operator lacks sufficient CEUs, the renewal of certification will be denied.

Individual CEU records for certified operators are available at the Division of Drinking Water office. Contact the Operator Certification Program staff to request your free operator record. Operator records are also available to view online at: http://www.drinkingwater.utah.gov/opcert_ceus.htm

Division of Drinking Water
Operator Certification Program
195 North 1950 West
P.O. Box 144830
Salt Lake City, Utah 84114-4830
Phone: 801-536-4200
Fax: 801-536-4211
E-mail: mhand@utah.gov OR kdyches@utah.gov
Website: http://www.drinkingwater.utah.gov

Operator Certification Commission

The Operator Certification Commission consists of seven members, which includes higher education representatives, a treatment operator, a distribution operator, a service district representative, a metropolitan water district representative, and a rural water system representative. These seven people make decisions such as what topics you, as an operator, will be tested on; when the test will be issued; how the program will be managed; how the program will operate; and how your exam fees and renewal fees will be spent to support the Operator Certification Program.

This commission is also the body that will hear all operator appeals, and will initiate any compliance activities for enforcement of the rules concerning certified operators. This commission also proposes rules, modifications, changes, and interpretation of the rules by which operators must abide. These rules, following the public hearing process, are actually adopted by the commission.

Operator Certification Commission members:

Mark Clark, Chair
Bart Simons, Vice-Chair
James Callison
David Stevens
Terry Beebe
Craig Fahrni
Gary Larsen
Kim Dyches, Secretary

Water Operator Certification
2013 Exam Schedule

ATTENTION ALL WATER SYSTEM OPERATORS AND MANAGERS, AND ANYONE SEEKING EMPLOYMENT IN THE WATER INDUSTRY. Utah's Department of Environmental Quality, Division of Drinking Water (DDW), is offering operator certification exams for water distribution and treatment systems. All grade levels, including small systems, will be offered:

- ► April 11, 2013, at 16 Utah exam sites (see exam application for list of cities).
  Exam application deadline: March 21, 2013.
- ► November 7, 2013, at 16 Utah exam sites (see exam application for list of cities).
  Exam application deadline: October 17, 2013.

How to register for an exam

Fill out an official exam application completely and mail it, along with the $100.00 fee, to: Division of Drinking Water, Operator Certification Program, 195 North 1950 West, P.O. Box 144830, Salt Lake City, Utah 84114-4830. Make the check or money order payable to the "Division of Drinking Water (DDW)."

The exam application and fee must arrive at the Division of Drinking Water office on or before the deadline listed on this announcement. Applications and fees received after the deadline will not be accepted. An exam confirmation letter will be mailed to all applicants. If you do not receive your confirmation letter, please contact the Operator Certification Program staff immediately at (801) 536-4200, or send email to **mhand@utah.gov**.

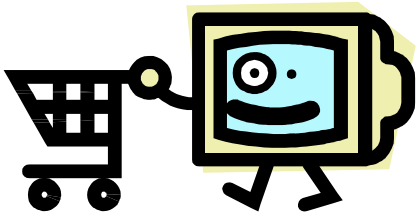

Online exam registration

http://www.drinkingwater.utah.gov/shopping_cart.htm. You may use the "Shopping Cart" system to submit the application online and pay the fee with a credit card. The system will accept Visa, Master Card, American Express, and Discover, or you can pay by Virtual Check. Please submit your application and payment by the deadline so that your exam booklet and seat can be reserved. If you have questions or need assistance, call the DDW staff at 801-536-4200 or send email to **mhand@utah.gov**.

Exam Cancellation Policy: Only one cancellation, per applicant, is allowed. An applicant making a written or phone-in cancellation by 9:00 a.m. on the day of the exam may request a refund of the exam fee or take the next scheduled exam. If the applicant should also cancel the next scheduled exam, the exam fee will be forfeited.

ADDITIONAL EXAM DATES AND TRAINING

The Rural Water Association of Utah (RWAU) will sponsor a certification exam in conjunction with their annual conference and pre-certification training February 25 to March 1, 2013. IMPORTANT ► Individuals taking the RWAU-sponsored exam must submit the exam application and fee directly to the RWAU office at 76 East Red Pine Drive, Alpine, Utah 84004-1557. Contact Shantell Cummins at 801-756-5123 for more information.

► Exam date: March 1, 2013 (St. George City). Exam application deadline: February 8, 2013

ONLINE exams available: For details or to schedule a State of Utah online certification exam, contact Shantell Cummins at RWAU, telephone 801-756-5123, or visit the website at *http://www.rwau.net.*

Training Events Calendar for Water and Wastewater

The Utah Water and Wastewater Training Coalition has assembled a new **Training Events Calendar** for individuals who need to prepare for the State of Utah operator certification exam, and for operators who are required to meet training requirements for certification renewal. The calendar is available online at:

http://www.calendarwiz.com/uwwtccal OR
http://www.drinkingwater.utah.gov/for_certified_operators.htm

If you don't have access to a computer, you may request a copy of the calendar by contacting the Division of Drinking Water.

Water and wastewater training events are sponsored by the following organizations:

ABPA	American Backflow Prevention Association	801-536-0089
AWWA	American Water Works Association (Small Systems Committee)	801-536-4097
DDW	Division of Drinking Water	801-536-4200
DWQ	Division of Water Quality	801-536-4344
RWAU	Rural Water Association of Utah	801-756-5123
WEAU	Water Environment Assn of Utah (PWOD Representative)	www.weau.org
UWWTC	Utah Water & Wastewater Training Coalition	801-863-8679

If you have questions about water operator training, feel free to contact the Division of Drinking Water certification program staff:

Division of Drinking Water
Operator Certification Program
195 North 1950 West
P.O. Box 144830
Salt Lake City, Utah 84114-4830
Telephone: (801) 536-4200
Fax: (801) 536-4211
E-mail: jyee@utah.gov
E-mail: mhand@utah.gov
E-mail: kdyches@utah.gov

Utah Operator Certification Rules
Rule 309-300 Summary

Summary

These rules cover the certification of water system operators.

Coverage

The rules apply to all community and non-transient non-community drinking water supply systems serving more than 25 individuals, and all public drinking water systems that utilize surface water sources or groundwater under the direct influence of surface water.

General

There are two classifications of certified operators: a) Certified operators are individuals who are actively involved in operating public water systems, and b) Certified water specialists are those involved with the water industry but not actively involved with operating a public water system. Distribution system or treatment plant managers are required to be certified at the grade of the waterworks system with an appropriate unrestricted certificate. All other direct responsible charge (DRC) operators shall be certified at the classification of the water system. Where 24-hour shift operation is used or required, one operator per shift must be certified at the classification of the system operated.

When a system required to have a certified operator finds itself without one, they must obtain an appropriately certified operator within one year, or four examination cycles, whichever is longer. An operator who is acting as the DRC operator for more than one drinking water system shall not be a Grandparent certified operator. A regional operator must have an unrestricted certificate equal to or higher than the grade and discipline of the rating applied to each system he is operating.

Examinations

All examinations shall be given twice a year, generally at each of 15 district health department offices and a Salt Lake City location. If an operator taking the examination fails to pass, he/she may file an application for reexamination. The minimum passing grade for all examinations shall be 70 percent. An individual who has failed to pass two consecutive written examinations of the same discipline and grade may apply to take an oral examination. Examinations will be offered in four grade levels for water treatment and five grade levels for water distribution, covering: a) general water supply knowledge, b) control processes and disinfection in water treatment or distribution, c) operation, maintenance, pumps, safety/security, and emergency procedures, d) proper record keeping, and e) rules, requirements, math and water quality standards.

Certificates

A restricted certificate will be issued to those operators who have passed a higher grade examination than the grade for which they have qualified for by experience. Upon accumulating the necessary experience, these restricted certificates will become unrestricted with the same renewal date. Grandparent certificates will be restricted to the person, position, and water system for which they were issued. Water specialist certificates will be issued to those persons who have met the experience requirements and have successfully passed the written examination. An individual who currently holds a valid certificate and who is no longer directly employed by a Utah drinking water system may request his certificate be converted to a water specialist with the same expiration date.

All certificates will expire on December 31, three years from the year of issuance. Failure to remain active in the waterworks can result in denial of certificate renewal. Reinstatement or renewal of a lapsed certificate may occur by payment of the fee and/or passing an examination. Renewal of a lapsed certificate may occur without examination within 6 months of the expiration date. Reinstatement of a lapsed certificate may occur by appealing to the Commission within one year after the 6-month grace period. Training, experience, education and progress made since the certificate lapsed will be considered in the reinstatement process.

Certificate Suspension and Revocation Procedures

The following may be grounds for suspending or revoking a certificate: a) demonstrated disregard for the public health, b) falsification of data, or c) cheating on a certification examination. Any suspension or revocation may be appealed to the Drinking Water Board by filing a request for a hearing with the Executive Secretary.

Facility Classification System

WATER TREATMENT CLASSIFICATION

Grade Level:	1	2	3	4
Population Served:	1,500 or less	1,501 - 5,000	5,001 - 15,000	over 15,000

DISTRIBUTION CLASSIFICATION

Grade Level:	Small System	1	2	3	4
Population Served:	25 - 500	501 - 1,500	1,501 - 5,000	5,001 - 15,000	over 15,000

CEUs and Approved Training

The following CEUs shall be obtained by a certificate holder every three years before the individual's certificate can be renewed. Ten hours of approved water-related training equals 1 CEU.

Classification	CEUs required in a 3-year period
Small System	2 CEUs
Grades I and II	2 CEUs
Grades III and IV	3 CEUs

Non-compliance with Certification Program

After appropriate consideration by the Commission, cases of non-compliance will be referred to the Drinking Water Board for appropriate enforcement action.

Operator Certification Program Fees - Effective July 1, 2006

Record application . . . . . none
Examination (all grade levels) $100.00
Renewal of certificate $100.00
Reciprocity $100.00
Reinstatement of lapsed certificate $200.00

Minimum Qualifications for Certification

MINIMUM REQUIRED QUALIFICATIONS FOR
UTAH WATERWORKS OPERATORS

Certification Grade (Both Distribution and Treatment)	EDUCATION				EXPERIENCE	
	Degree	Associate Degree	High School	Non-High School	DRC Years	Total Years
4	X				2	4
		X			2	6
			X		4	8
				X	5	10
3	X				1	2
		X			1	2
			X		2	4
				X	3	6
2	X				0	2
		X			0	2
			X		0	2
				X	0	3
1 and Small System	X				0	1
		X			0	1
			X		0	1
				X	0	1

MINIMUM REQUIRED QUALIFICATIONS FOR
UTAH WATER SPECIALISTS

Certification Grade (Both Distribution and Treatment)	EXPERIENCE	
	"Hands On" (Years)	Design or Associated (Years)
4	8	10
3	4	8
2	2	4
1 and Small System	0	0

Routine Inspection

Frequency

AWWA fire hydrant standards committee recommends fire hydrants be inspected at least annually and after each use. In freezing climates, they recommend that in addition to inspection after each use, hydrants be inspected twice each year, once in the fall and again in the spring. Lack of experience with the brands of hydrants being inspected, as well as time between inspections will both contribute to an increase in the length of time necessary to inspect a fire hydrant

Time Consumption - Routine

The **routine inspection**[39] of common fire hydrants by experienced operators should take approximately 20 minutes per hydrant.

Tools Needed

In order to properly perform hydrant inspections, the following basic tools are recommended:

1. A hydrant **spanner wrench**[40]. Several styles are available.
2. Hydrant **deflector**[41] or diffuser
3. Inspection forms
4. Thread lubricant
5. Hand tools including a wire brush
6. Valve wrench
7. Tarp, 12' x 12'

Staff

One or two operating personnel.

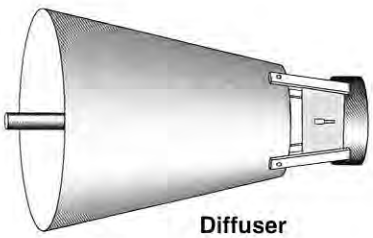

Diffuser

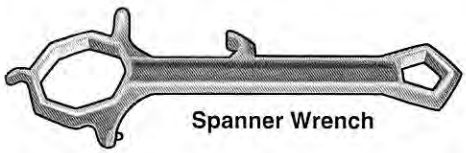

Spanner Wrench

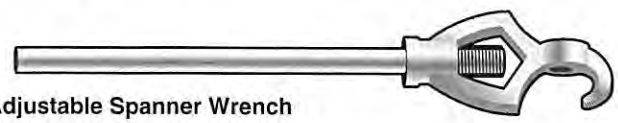

Adjustable Spanner Wrench

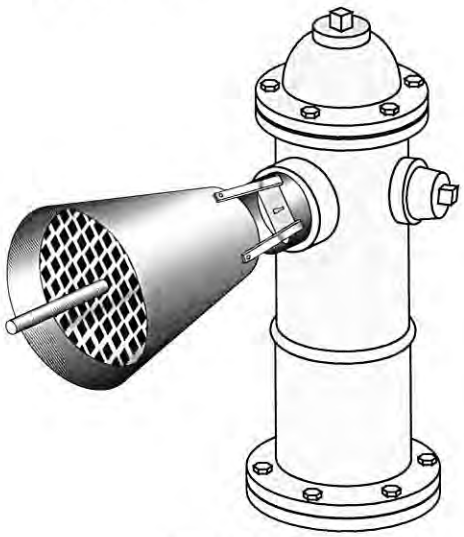

Diffuser installed

[39] **Routine Inspection** - An inspection that is done in a prescribed way at specified times.

[40] **Spanner Wrench** - A wrench designed to operate a hydrant. The wrench may be designed for a set size of operating nut with the opposite ends designed to fit the hold down nut. The wrench may be adjustable for various sizes of operating nuts. When the wrench is adjustable, it will not fit the hold down nut.

[41] **Deflector** - A device use to absorb or deflect the velocity head of water exiting a fire hydrant. It is used to protect streets, traffic, and private property from damage resulting from the flow of water from a fire hydrant.

Procedure - Dry Barrel Hydrants

Sequence

1. Check the hydrant appearance. Remove any brush or grass that obstructs the view of the hydrant. If it needs painting, either paint or schedule for painting. Check the hydrant height. If the hydrant needs to be raised due to a change in ground level *(the flange between the lower barrel and nozzle section should be two inches above the ground)* due to construction in the area, then schedule the work.
2. Remove one nozzle outlet cap. Use a listening device to check for leakage of the main valve.
3. Use a plumb bob or a mirror and light to check for the presence of water in the lower barrel. If water is present, determine the cause and correct the problem.
4. Lubricate the operating nut. On some brands of hydrants, lubrication is via grease; on others, an oil reservoir is provided. Follow the manufacturers recommendations for lubrication. Here are some typical lubrication examples: Mueller - check oil level, it should be 1" below the fill plug. American Darling - remove the bonnet, the housing cover, the operating nut, and lubricate the threads with a water resistant grease. Clow remove operating nut and lubricate the threads.
5. Replace the nozzle cap. Leave it loose enough to allow air to vent from the hydrant.

Warning:

If the manufacturer's caps have been replaced with plastic nozzle caps, they will need to be replaced with metal caps prior to proceeding.

If due to the design or age of the hydrant or due to line pressure, the caps may blow off during the test, then this step should be skipped.

6. Open the hydrant two to three turns. Allow air to vent from the hydrant.
7. Tighten the cap.
8. Fully open the hydrant. Check for ease of operation. Some water conditions will cause a buildup on the threads of toggle and compression hydrants that open with the pressure. This can often be removed by a series of opening and closing. Other common problems that lead to difficulty in opening are bad packing, stuck "O" rings, and bent shafts.
9. Check for leakage at flanges, operating nut, packing,"O" rings, nozzles, and nozzle caps. Repair as needed.
10. Close the hydrant enough to cause the drain valve to work. Allow water to flow under pressure through the drain valve for about ten seconds. This will help to

flush the drain valve and keep it in working order.

11. Close the hydrant completely. Back off the operating nut so that pressure is taken off of the thrust bearing or thrust collar.

12. Remove one nozzle cap.

13. Attach a deflector. The recommendation of the hydrant standards committee is to use a deflector that can be set in the gutter and attached to the hydrant with a fire hose. When the style of deflector that attaches directly to the hydrant is used, there is still a potential for damage to property. This can be minimized by placing a tarp under the deflector and using the tarp to direct the flow of water to the gutter or storm drain.

14. Open the hydrant fully to flush the hydrant barrel and lead. Be sure to protect private property, streets and traffic. Storm sewer grates and culverts should be observed and kept clear of debris.

When the hydrant is flowing full, a flow test can be conducted. Some styles of deflectors offer an opening designed specifically to allow a pitot tube measurement to be taken.

15. Close the hydrant completely and remove the deflector. Count the number of turns to close and compare with existing data. If the number of turns is significantly different, then the hydrant should be scheduled for disassembly and internal inspection.

With the hydrant closed, check for proper working of the drain valve by placing your hand over the open nozzle. A slight suction should be felt if the drain valve is working properly.

16. Remove all nozzle caps. Clean the nozzle and cap threads and replace any damaged or missing nozzle cap gaskets. Light grease or a mixture of graphite and various never-seize compounds can used to lubricate the threads.

17. Check for free action of the nozzle cap chains or cables. If they bind, then remove paint or rust and/or open the loop so that they move more freely. If the chains have become damaged or rusted together, they should be replaced. This action will prevent the chains from kinking during emergencies, making removal difficult.

18. Replace the nozzle caps. Tighten and then back off slightly. They should be tight enough to prevent removal by hand but loose enough to be removed with ease using a spanner wrench.

19. Locate and exercise the auxiliary valve. Count the number of turns to close and open. Compare the turns with the data file.

20. Fill out the report form.

Dechlorination Considerations

State environmental regulations may require dechlorination of water flushed from a fire hydrant. Details on dechlorination can be found in the "Construction of Distribution System" manual.

Dry Barrel Inspection Checklist

HYDRANT # _____ LOCATION _____

- ❑ 1. Appearance clean and paint as needed
- ❑ 2. Remove outlet-nozzle cap; check main valve leakage
- ❑ 3. Check for water and/or ice in lower barrel
- ❑ 4. Loosely replace nozzle cap
- ❑ 5. Lubricate operating nut; check oil reservoir
- ❑ 6. Open hydrant 2 to 3 turns; allow air to vent through cap
- ❑ 7. Check drain valve
- ❑ 8. Open the hydrant fully
- ❑ 9. Check for ease of operation & Leakage,

  Ease of operation ❑ Yes, ❑ No Leakage ❑ Yes, ❑ No
- ❑ 10. Partially close the hydrant; allow drain valve to work
- ❑ 11. Close the hydrant completely
- ❑ 12. Flush barrel and lead; use deflector
- ❑ 13. Close hydrant; count turns. Number of turns _____
- ❑ 14. Remove all nozzle caps, clean and lube threads; replace damaged or lost gaskets
- ❑ 15. Check nozzle cap chains and/or cable for free action
- ❑ 16. Locate and exercise auxiliary valve

  • Number of turns to close and open _____
- ❑ 17. Problems Identified:

  _____

  _____

  _____

  _____
- ❑ 18. Problems resolved:

  _____

  _____

  _____

Procedure - Wet Barrel Hydrants

Sequence

1. Check the hydrant appearance. Remove any brush or grass that obstructs the view of the hydrant. If it needs painting, either paint or schedule for painting. Check the hydrant height. If the hydrant needs to be raised due to a change in ground level (the flange between the lower barrel and nozzle section should be two inches above the ground) due to construction in the area, then schedule the work.

2. Remove each nozzle cap. Check for leakage from the main valves.

   Clean the nozzle and cap threads and replace any damaged or missing nozzle cap gaskets. A mixture of Graphite and various never-seize compounds can used to lubricate the threads.

3. Open each nozzle two to three turns and close again. Check for leakage from the nozzle main valve and from the packing gland. If there is any leakage, schedule the hydrant for repair.

4. Remove one nozzle cap.

Flow Test

If a flow test is called for, use steps 5 through 7, otherwise go to step 8.

5. Attach a deflector. The recommendation of the hydrant standards committee is to use a deflector that can be set in the gutter and attached to the hydrant by a fire hose. When the style of deflector that attaches directly to the hydrant is used, there is still a potential for damage to property. This can be minimized by placing a tarp under the deflector and using the tarp to direct the flow of water to the gutter or storm drain.

6. Open the hydrant fully to flush the hydrant barrel and lead. Be sure to protect private property, streets, and traffic. Storm sewer grates and culverts should be observed and kept clear of debris.

   When the hydrant is flowing full, a flow test can be conducted.

7. Close the hydrant completely and remove the deflector. Count the number of turns to close and compare with existing data. If the number of turns is significantly different, then the hydrant should be scheduled for repair.

8. Check for free action of the nozzle cap chains or cables. If they bind, then remove paint or rust and/or open the loop so that they move more freely. If the chains have become damaged or rusted together, they should be replaced. This action will prevent the chains from kinking during emergencies, making removal difficult.

9. Replace the nozzle caps. Tighten each nozzle cap and then back off slightly. They should be tight enough to prevent removal by hand but loose enough to be removed with ease using a spanner wrench.

10. Locate and exercise the auxiliary valve. Count the number of turns to close and open. Compare the turns with the data file.

11. Fill out the report form.

Dechlorination Considerations

Environmental regulations may require dechlorination of water flushed from a fire hydrant. Details on dechlorination can be found in the "Construction of Distribution System" manual.

Wet Barrel Inspection Checklist

HYDRANT # _____ LOCATION _____

- ❑ 1. Appearance clean and paint as needed
- ❑ 2. Remove outlet-nozzle caps
- ❑ 3. Check outlet nozzles for leaks:

  Hose nozzle ❑ Yes, ❑ No Hose nozzle ❑ Yes, ❑ No

  Pumper nozzle ❑ Yes, ❑ No
- ❑ 4. Clean and lube nozzle caps and outlet nozzle threads
- ❑ 5. Check outlet nozzle cap gasket condition - Replace if necessary
- ❑ 6. Open each hydrant valve fully - One at a time
- ❑ 7. Check for ease of operation:

  Hose nozzle ❑ Yes, ❑ No Hose nozzle ❑ Yes, ❑ No

  Pumper nozzle ❑ Yes, ❑ No
- ❑ 8. Clean each valve carrier and lubricate
- ❑ 9. Close each hydrant valve; count the number of turns:

  Hose nozzle _____

  Hose nozzle _____

  Pumper nozzle _____
- ❑ 10. Replace nozzle caps
- ❑ 11. Check nozzle cap chains and/or cable for free action
- ❑ 12. Locate and exercise auxiliary valve

  • Number of turns to close and open _____
- ❑ 13. Problems Identified:

  _____

  _____

  _____
- ❑ 14. Problems resolved:

  _____

  _____

  _____

Report Example

The following card is an example of a fire hydrant inspection report form.

Fire Hydrant Inspection Report

Location _____ Hydrant No. _____

Type of Hydrant: Wet Barrel ❑ Dry Barrel ❑ Stand pipe ❑

Caps Missing ❑ Replaced ❑ Greased ❑

Chains: Missing ❑ Replaced ❑ Freed ❑

Paint: OK ❑ Repainted ❑

Dry Barrel Operating Nut: OK ❑ Greased ❑ Replaced ❑

Nozzles: OK ❑ Lubricated ❑ Threads cleaned ❑ Replaced ❑

Hose nozzle turns to open _____ Operate OK ❑ Leakage ❑

Hose nozzle turns to open _____ Operate OK ❑ Leakage ❑

Pumper nozzle turns to open _____ Operate OK ❑ Leakage ❑

Flushed ❑ _____ Minutes _____ Nozzles open

Pressures: Static _____ psi Residual _____ psi

Auxiliary valve: Located ❑ Turns to open_____ Condition_____

Other Defects: _____

_____

_____

_____

_____

_____

Inspected by _____ Date_____

Defects Corrected by _____ Date_____

Painting

Public Relations

The appearance of the fire hydrants in a community has a direct impact on the public's perception of the quality of the drinking water and on their perception about the quality of work that is performed by the utility. Therefore, it is necessary to maintain the appearance of the hydrants by painting. There are two methods of painting commonly used: the spray method and the brush method.

Overspary Problems

The spray method requires the least amount of time. However, there is a higher capital cost for the equipment and there is the concern for protection of surrounding property from overspray. The additional cost can be offset by the savings in both time and the amount of paint used. *The spray system will use less paint than the brush system.* Prior to using a spray system, it is important that the operators become familiar with the proper use and care of the system.

Paint Booth

A simple portable paint booth can be made from a plastic 55 gallon drum. Simply cut out the bottom and a portion of one side. The drum can be rotated as the hydrant is painted, allowing easy access to all sides.

Protecting the Sidewalk

When the hydrant is placed in a sidewalk, then the sidewalk must be protected from spray. This device is constructed of 1/4" or 1/8" masonite.

Paint Brush
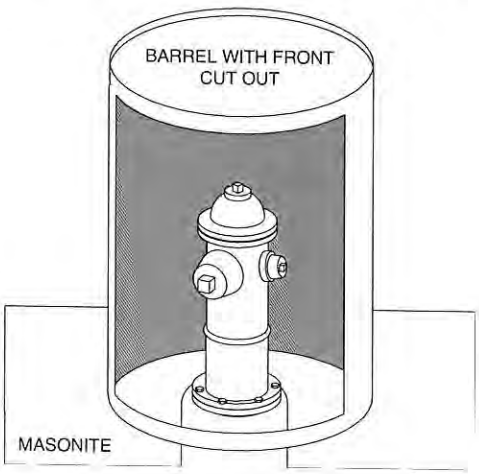
The paint brush method is by far the easiest method of painting fire hydrants. It takes very little training or capital outlay. However, the time consumption can be four to ten times the time required to paint the same number of hydrants with a spray system. When using a brush to paint fire hydrants that are installed in sidewalks, use some type of protection for the sidewalk. The sidewalk could be covered with plastic or use the sidewalk protector described above.