State of Utah

GARY R. HERBERT
Governor

SPENCER J. COX
Lt. Governor

Department of Administrative Services
KIMBERLY K. HOOD
Executive Director

Division of Facilities Construction and Management
P. JOSHUA HAINES
Director

Addendum No. 1

Date: June 26, 2014

To: Contractors

From: Bianca Shama- DFCM Project Manager

Reference: Ground Mount PV Installation Utah Field House of Natural History
Division of Parks & Recreation-Vernal UT
DFCM Project No. 14144510

Subject: **Addendum No. 1**

Pages	Addendum Cover Sheet	1	page
	General Items	49	pages
	Total	50	pages

Note: This Addendum shall be included as part of the Contract Documents. Items in this Addendum apply to all drawings and specification sections whether referenced or not involving the portion of the work added, deleted, modified, or otherwise addressed in the Addendum. Acknowledge receipt of this Addendum in the space provided on the Bid Form. Failure to do so may subject the Bidder to Disqualification.

SCHEDULE CHANGES: There are no project schedule changes.

GENERAL ITEMS: Q/A – 1 page
As-Built drawings including civil site plan/utility plan, dated February 15, 2012 – 48 pages

QUESTION/ANSWER

Q1. What sort of educational display will be required for this project?
A1. There was discussion about an exterior static display being included as part of the scope of this project. This WILL NOT be required in the base bid. Parks will either add this display or it will be added to the project at a later date. DO NOT include pricing for the static display in your base bid. Only include the educational kiosk and interface with your bid.

Q2. What sort of finish will be required for the ground under the panels?
A2. It is the preference of State Parks that the gravel that is currently there be used. If additional gravel is needed on the other side of the side walk State Parks will handle this. There currently is a weed barrier used under the existing gravel.

Q3. What sort of fence will be used by put up around the site?
A3. State Parks intends to use a 6 foot chain link fence with wire across the top to minimize shading.

Q4. The RFP asks for 5 copies of various sections, and 6 drawing sets, as well as two CDs of just the Management Plan. Please clarify how many hard copy sets you would like inside our sealed packets, and what you would like on the CDs.
A4. 5 packets include in each packet a copy of Past Performance References, Statement of Qualifications, Design Proposal, Management Plan/Time, and Termination or Debarment Certifications.
4 drawing sets
2 CD which should contain all of the above (except drawings).

VERNAL FIELD HOUSE OF NATURAL HISTORY MUSEUM - ADDITION

for:

UTAH STATE PARKS AND RECREATION/UINTAH COUNTY

470 EAST MAIN STREET VERNAL, UTAH 84078

100% SET
15 FEBRUARY 2012

DFCM PROJECT NUMBER: #11327810
DFCM PROPERTY NUMBER: #00572

NOTE: ILLUSTRATION IS AN ARTIST'S INTERPRETATION ONLY

PROJECT INFORMATION

PLEASE REFER TO DFCM CODE ANALYSIS FORM ON SHEET A031 FOR ADDITIONAL INFORMATION

BUILDING DESCRIPTION:

1-STORY PALEONTOLOGICAL REPOSITORY ADDITION TO 2-STORY NATURAL HISTORY MUSEUM LOCATION IN VERNAL, UT.

TOTAL AREA OF EXISTING BUILDING:	17,014 SF
TOTAL AREA OF BUILDING ADDITION:	11,235 SF
TOTAL HEIGHT OF BUILDING ADDITION:	24 FEET

OCCUPANCY CLASSIFICATION

ORIGINAL BUILDING:	GROUP A-3 NON-SEPARATED SPACES
PALEONTOLOGICAL REPOSITORY:	GROUP S-2

CONSTRUCTION TYPE

TYPE II-B, FULLY SPRINKLERED NFPA-13 PER SECTION 903.3.1.1 (SEE SPECIFICATIONS FOR ADDITIONAL INFORMATION)

PALEONTOLOGICAL REPOSITORY AND UTAH FIELD HOUSE CONSIDERED ONE BUILDING, SEE AREA CALCULATION BELOW)

ALLOWABLE AREA AND HEIGHT (TABLE 503):

UTAH FIELD HOUSE:	
MAIN LEVEL:	17,014 SF
UPPER LEVEL:	4,157 SF
PALEONTOLOGICAL REPOSITORY:	
MAIN LEVEL:	11,235 SF
TOTAL BUILDING AREA:	**32,406 SF**
ALLOWABLE HEIGHT:	2 STORIES, 40 FEET
ALLOWABLE AREA PER FLOOR:	9,500 SF
ALLOWABLE AREA PER FLOOR: (W/ INCREASE PER SECTION 506)	**35,150 sf**

EQUATION 5-1: (SEE IBC 2009 SECTION 506 FOR VARIABLE DEFINITIONS)

$$A_a = (A_t + [A_t \times I_f] + [A_t \times I_s])$$

WHERE A_t = 9,500 SF PER FLOOR; I_f = 0.7; I_s = 2

EQUATION 5-2

$$L_f = [(F/P) \cdot 0.25]W / 30$$

WHERE F = 1,174 FEET; P = 1,204 FEET; W = 29

FIRE RESISTIVE RATING REQUIREMENTS FOR BUILDING ELEMENTS (TABLE 601): TYPE II-B CONSTRUCTION

STRUCTURAL FRAME:	0 HOUR
BEARING WALLS EXTERIOR:	0 HOUR
BEARING WALLS INTERIOR:	0 HOUR
NONBEARING WALLS INTERIOR:	0 HOUR
FLOOR CONSTRUCTION	0 HOUR
ROOF CONSTRUCTION:	0 HOUR

OCCUPANT LOAD 1004:

ORIGINAL BUILDING:	
UNCONCENTRATED	7,200 SF NET/15 = 480
CLASSROOM	950 SF/20 = 48
GIFT SHOP	542 SF/30 = 18
BUSINESS	659/100 = 7
PALEONTOLOGICAL REPOSITORY:	
WAREHOUSE	9,889/500 = 20
BUSINESS	1,196/100 = 12
ACCESSORY	150/300 = 1
TOTAL OCCUPANT LOAD:	586

PLUMBING FIXTURES SUMMARY (TABLE 2902.1)
FOR PALEONTOLOGICAL REPOSITORY ONLY

UNISEX	1 PROVIDED
LAVATORIES	1 PROVIDED
DRINKING FOUNTAINS	2 PROVIDED IN ORIGINAL BUILDING
SERVICE SINK	1 PROVIDED

DRAWING INDEX

CIVIL

C101 CIVIL SITE PLAN / UTILITY PLAN
C202 GRADING/STORM DRAIN PLAN
C500 STANDARD DETAILS

ARCHITECTURAL

A001 GENERAL NOTES, LEGENDS, ABBREVIATIONS, AND SYMBOLS
A020 ADA NOTES AND DETAILS
A021 ADA NOTES /DETAILS, SIGNAGE & FIXTURES HEIGHTS
A031 CODE REVIEW SHEET - EGRESS & FIRE BARRIERS
A101 ARCHITECTURAL SITE PLAN
A201 MAIN LEVEL DEMOLISH PLAN
A210 OVERALL FLOOR PLAN
A211 MAIN LEVEL FLOOR PLAN
A211s MAIN LEVEL SLAB PLAN
A212 ROOF PLAN
A301 EXTERIOR BUILDING ELEVATIONS
A311 BUILDING SECTIONS
A321 WALL SECTIONS
A322 WALL SECTIONS
A501 INTERIOR ELEVATIONS
A601 REFLECTED CEILING PLAN LEVEL 1
A801 EXTERIOR DETAILS
A802 EXTERIOR DETAILS
A803 EXTERIOR DETAILS

STRUCTURAL

S-001 GENERAL STRUCTURAL NOTES
S-101 FOOTING AND FOUNDATION PLAN
S-111 ROOF FRAMING PLAN
S-201 TYPICAL BRACED FRAME DETAILS
S-202 BRACED FRAME ELEVATIONS
S-501 FOUNDATION DETAILS
S-502 FOUNDATION AND FOUNDATION DETAILS
S-511 ROOF FRAMING DETAILS
S-512 ROOF FRAMING DETAILS
S-513 ROOF FRAMING DETAILS
S-601 SCHEDULES

MECHANICAL/PLUMBING

M001 MECHANICAL SCHEDULES
M101 MECHANICAL ROOF PLAN
M201 LEVEL 1 - MECHANICAL PLAN
M601 MECHANICAL DETAILS
P201 LEVEL 1 - PLUMBING PLAN

ELECTRICAL

E001 ELECTRICAL SYMBOLS AND NOTES
E101 OVERALL BUILDING - POWER PLAN
E201 LEVEL 1 - POWER PLAN
E301 LEVEL 1 - LIGHTING PLAN
E401 LEVEL 1 - SYSTEMS PLAN
E501 ONE-LINE DIAGRAM
E502 ELECTRICAL SCHEDULES
E601 ELECTRICAL DETAILS

VICINITY MAP

PROJECT TEAM

OWNER

DIVISION OF FACILITIES CONSTRUCTION AND MANAGEMENT (DFCM)

4110 STATE OFFICE BUILDING
450 NORTH STATE STREET
SALT LAKE CITY, UT UT 84114
T: 801.538.3018
F: 801.538.3267

CONTACT: DARRELL HUNTING
dhunting@utah.gov
801.244.7647

CIVIL ENGINEER

CIVIL SOLUTIONS GROUP

2 NORTH MAIN, SUITE #7
PROVIDENCE, UT 84332
T:435.213.3762

CONTACT: DANNY MACFARLANE
danny@civilsolutionsgroup. net

civilsolutionsgroup PC
Leaders in Sustainable Engineering and Planning

MECHANICAL ENGINEER

PVE INC.

1040 N. 2200 W. SUITE 100
SALT LAKE CITY, UTAH 84116
T: 801.359.3158

CONTACT:ROB J. VAN
rjvan@pve-ut.com

PVE Inc. Consulting Mechanical / Electrical Engineers

ARCHITECT

JWL + BDG ARCHITECTURE

52 EXCHANGE PLACE
SALT LAKE CITY, UT 84111
T: 801.531.1144
F: 801.363.3132

CONTACT: WES BAKER
wes@babcockdesign.com

JWL + BDG Architecture

STRUCTURAL ENGINEER

BHB CONSULTING ENGINEERS

2766 SOUTH MAIN STREET
SALT LAKE CITY, UT 84115
T: 801.355.5656
F: 801.355.5950

CONTACT: CHRIS HOFHEIN
chris.hofheins@bhbengineers.com
or
TRAVIS BRACKUS
travis.brackus@bhbengineers.com

"Engineering Results"
BHB Consulting Engineers
A Professional Corporation

ELECTRICAL ENGINEER

PVE INC.

1040 N. 2200 W. SUITE 100
SALT LAKE CITY, UTAH 84116
T: 801.359.3158

CONTACT: CHAD WALKER
or TODD HAIGHT

PVE Inc. Consulting Mechanical / Electrical Engineers

PHASE SIGN-OFF

PROJECT PHASE:

☐ APPROVED ☐ APPROVED WITH COMMENTS ☐ REVISE & RESUBMIT; SEE COMMENTS

OWNER COMPANY | NAME (PRINTED) | TITLE | SIGNATURE | DATE

☐ APPROVED ☐ APPROVED WITH COMMENTS ☐ REVISE & RESUBMIT; SEE COMMENTS

OWNER COMPANY | NAME (PRINTED) | TITLE | SIGNATURE | DATE

☐ APPROVED ☐ APPROVED WITH COMMENTS ☐ REVISE & RESUBMIT; SEE COMMENTS

OWNER COMPANY | NAME (PRINTED) | TITLE | SIGNATURE | DATE

Signatures indicate these drawings have been reviewed by the parties listed above. Approval constitutes permission for the Design Team to proceed with the next design phase. Concerns or comments regarding the design are to be made on this set as a record. Any alteration or modification to these documents by the Owner/Tenant after the signature date is considered a change in scope. Change in scope requires additional review and approval by all parties listed above. For liability purposes, these documents may be altered by the Design Team without owner consent to conform to building codes and/or to comply with any other governing standard deemed necessary by the Design Team.

revisions:

mark	description	date
1		
2		
3		
4		
5		
6		

date: 15 FEBRUARY 2012
project number: 201103
drawn by: JB
checked by: -
project status:
current as of: 2/15/2012 2:42:33 PM
file path: original drawing is 30" x 42"
S:\Projects\2011\201103 Vernal Field House of Natural History Museum - Addition\Architecture\Revit\201103 Vernal Natural

The drawings, specifications, designs and ideas contained herein are considered to be the exclusive property of the Architect and shall not be reproduced in whole or in part, or used for other projects, or disclosed to others without written consent of the Architect. Drawings and specifications are instruments of service, and shall be returned to the Architect upon completion of the work. They are transmitted for use only for the purpose and to the extent stipulated in the agreement between the Architect and the Owner. Any other reproduction or modification of the contained projects, in part or in whole, is prohibited. Reproduced prints or digital files, or otherwise used without the prior written consent of Babcock Design Group, Inc.

COPYRIGHT © 2009 BABCOCK DESIGN GROUP

JWL + BDG Architecture

stamp:

VERNAL FIELD HOUSE OF NATURAL HISTORY MUSEUM - ADDITION

for:

UTAH STATE PARKS AND RECREATION/UINTAH COUNTY

470 EAST MAIN STREET VERNAL, UTAH 84078

52 exchange place salt lake city, ut 84111 t 801 531 1144 f 801 363 3132 www.babcockdesign.com

sheet title: COVER AND SHEET INDEX

sheet number: 000

VERNAL FIELD HOUSE OF NATURAL HISTORY MUSEUM - ADDITION
CIVIL SITE PLAN/UTILITY PLAN

SCALE 1"=20'

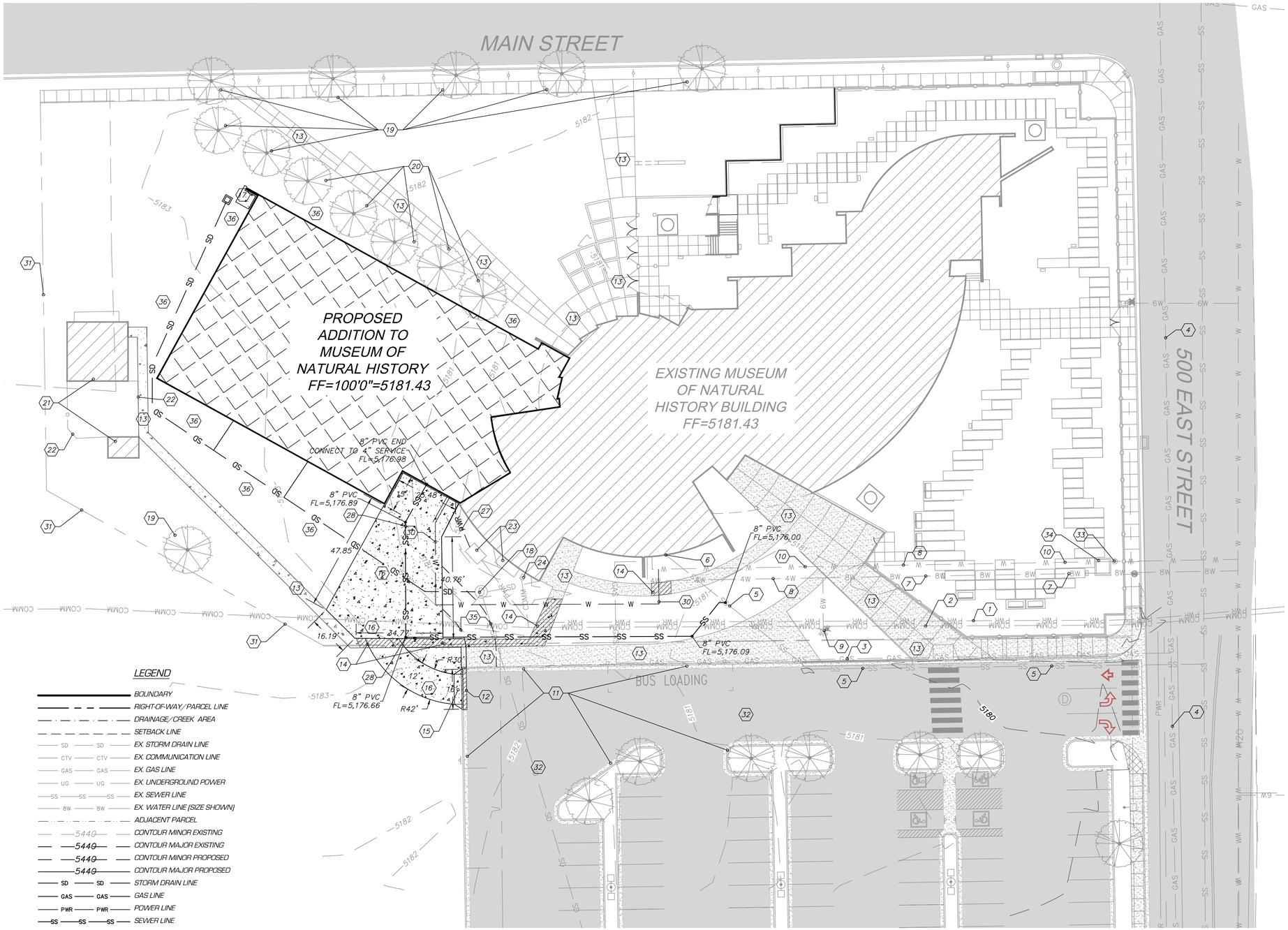

SHEET KEY NOTES:

1. EXISTING ROCKY MOUNTAIN POWER LINE. LOCATION APPROXIMATE. CONTRACTOR SHALL CALL BLUE STAKES PRIOR TO BEGINNING CONSTRUCTION.
2. EXISTING STRATA COPPER AND FIBER OPTIC COMMUNICATIONS LINE. LOCATION APPROXIMATE. CONTRACTOR SHALL CALL BLUE STAKES PRIOR TO BEGINNING CONSTRUCTION.
3. EXISTING 1-1/4" QUESTAR GAS LINE. LOCATION IS APPROXIMATE. CONTRACTOR SHALL CALL BLUE STAKES PRIOR TO BEGINNING CONSTRUCTION.
4. EXISTING 3-INCH QUESTAR GAS LINE.
5. EXISTING 6" SEWER SERVICE.
6. FLOW LINE ELEVATION OF EXISTING SEWER SERVICE = 5175.01. THIS IS BASED UPON THE AS-BUILT DRAWING FROM STANTECH ENGINEERING. CONTRACTOR SHALL VERIFY DEPTH PRIOR TO CONNECTING SEWER SERVICE.
7. EXISTING 8" DIP FIRE LINE.
8. EXISTING 4" DIP FIRE LINE.
9. EXISTING FIRE HYDRANT.
10. EXISTING 2.5" COPPER WATER SERVICE.
11. EXISTING CURB AND GUTTER TO REMAIN.
12. EXISTING CURB AND GUTTER TO BE REMOVED.
13. EXISTING SIDEWALK TO REMAIN.
14. EXISTING SIDEWALK TO BE REMOVED AND REPLACED.
15. PROPOSED DRIVE APPROACH AND CURB. SEE STANDARD DETAIL #5 ON SHEET C-500.
16. PROPOSED 6" CONCRETE DRIVEWAY. SEE STANDARD DETAIL #3 ON SHEET C-500.
17. PROPOSED 4' WIDE SIDEWALK. SEE STANDARD DETAIL ON #4 ON SHEET C-500.
18. EXISTING 6' WIDE SUMP TO REMAIN.
19. EXISTING TREES TO REMAIN.
20. EXISTING TREES TO BE REMOVED OR PRUNED.
21. EXISTING SHED TO REMAIN.
22. EXISTING FENCE TO REMAIN.
23. EXISTING POWER EQUIPMENT.
24. EXISTING TELEPHONE PEDESTAL.
25. PROPOSED STORM DRAIN SYSTEM. SEE SHEET C201
26. NOT USED.
27. PROPOSED POWER SERVICE CONDUITS. SEE MECHANICAL PLANS.
28. INSTALL 8" PVC SEWER SERVICE AT 0.5% SLOPE. SEE PLANS FOR ELEVATIONS. INSTALL BRASS CAP SEWER CLEANOUTS AT ALL BENDS. THE BRASS CAP SHALL BE FLUSH WITH THE FINISHED GROUND.
29. NOT USED.
30. PROPOSED FIRE LINE. CONTRACTOR AND FIRE ENGINEER TO VERIFY THE ADEQUACY OF THE EXISTING FIRE SYSTEM TO DETERMINE THE NEED AND SIZE OF THIS PROPOSED FIRE LINE.
31. BOUNDARY LINE OF PARCEL #050300082 BASED UPON THE ORIGINAL ALTA SURVEY.
32. EXISTING ASPHALT TO REMAIN.
33. EXISTING WATER METER.
34. EXISTING WATER VAULT.
35. ALTERNATE DRIVEWAY ACCESS.
36. INSTALL LANDSCAPING PER ARCHITECTURAL SITE PLAN DETAILS.

GENERAL NOTES:

1. THE TOPOGRAPHIC AND FEATURE SURVEY WAS PROVIDED BY CIVIL SOLUTIONS GROUP, INC. THE SCOPE OF THE SURVEY WAS TO OBTAIN TOPOGRAPHIC AND FEATURE DATA.
2. A METES AND BOUNDS SEARCH WAS CONDUCTED AT THE UINTAH COUNTY RECORDER'S OFFICE AND THE ORIGINAL ALTA SURVEY FOR THE MUSEUM PROJECT WERE REVIEWED TO DETERMINE THE APPROXIMATE BOUNDARY LINE. BASED UPON THE CAD FILE OF THE ALTA SURVEY THE PROPOSED ADDITION IS WITHIN THE PROPERTY CURRENTLY OWNED BY EITHER THE UTAH STATE DIVISION OF PARKS AND RECREATION, UTAH STATE DIVISION OF FACILITIES AND CONSTRUCTION, OR THE MUNICIPAL BUILDING AUTHORITY OF UINTAH COUNTY.
3. REFER TO THE ARCHITECTURAL PLAN FOR FLOOR PLANS OF THE PROPOSED ADDITION.
4. ROOF DRAINS FROM THE ADDITION WILL CONNECT TO THE EXISTING SUMP. THE SUMP WAS INSTALLED DURING CONSTRUCTION OF THE ORIGINAL MUSEUM BUILDING FOR STORAGE OF A FUTURE ADDITION, WHICH CONNECTS TO THE EXISTING STORM DRAIN SYSTEM IN THE PARKING LOT.
5. THE GAS, POWER, AND COMMUNICATIONS LINES ARE SHOWN BASED UPON COLLECTED MAPS FROM THE UTILITY COMPANIES, INFRASTRUCTURE LOCATIONS, AND OTHER MARKINGS ON SITE.
6. THE WASTE LINE WILL BE DRAINED INTO AN EXISTING DRAIN LINE IN THE EXISTING BUILDING.
7. THE POWER AND COMMUNICATION LINES WILL TIE INTO THE EXISTING SERVICE. SEE ELECTRICAL DRAWING FOR INFORMATION.
8. THE GAS SERVICE WILL BE COORDINATED AND SHOWN ON THE MECHANICAL PLAN.
9. THE BUILDING WILL CONNECT TO THE EXISTING FIRE SUPPRESSION SYSTEM ON THE EXISTING BUILDING.
10. FIRE DEMAND ANALYSIS:
    EXISTING BUILDING CONSTRUCTION TYPE: 5B [22,171 SF]
    PROPOSED BUILDING CONSTRUCTION TYPE 2B [11,664 SF]
    - ACCORDING TO APPENDIX B OF THE IFC 2009 THE COMBINED FIRE FLOW DEMAND IS 6,250 GPM. THE CODE ALLOWS FOR A REDUCTION OF 75% IF THE BUILDING HAS FIRE SUPPRESSION SPRINKLERS, WHICH IT DOES. THAT RESULTS IN A FIRE FLOW DEMAND OF 1,562.50 GPM.
    - ACCORDING TO APPENDIX C OF THE IFC 2009 THE REQUIRED DISTANCE FROM FIRE HYDRANTS IS 250' OR LESS FOR THE ABOVE FIRE DEMAND. THERE ARE TWO EXISTING FIRE HYDRANTS WITHIN A DISTANCE LESS THAN 250'.

LEGEND

- BOUNDARY
- RIGHT-OF-WAY/PARCEL LINE
- DRAINAGE/CREEK AREA
- SETBACK LINE
- SD — EX. STORM DRAIN LINE
- CTV — EX. COMMUNICATION LINE
- GAS — EX. GAS LINE
- UG — EX. UNDERGROUND POWER
- SS — EX. SEWER LINE
- 8W — EX. WATER LINE [SIZE SHOWN]
- ADJACENT PARCEL
- 5440 — CONTOUR MINOR EXISTING
- 5440 — CONTOUR MAJOR EXISTING
- 5440 — CONTOUR MINOR PROPOSED
- 5440 — CONTOUR MAJOR PROPOSED
- SD — STORM DRAIN LINE
- GAS — GAS LINE
- PWR — POWER LINE
- SS — SEWER LINE
- 10W — WATER LINE [SIZE SHOWN]
- EXISTING ASPHALT
- PROPOSED ASPHALT
- PROPOSED BUILDING
- 50.00 — EXISTING ELEVATION
- 50.00 — PROPOSED ELEVATION
- CONSTRUCTION LIMIT LINE
- SILT FENCE
- OPEN FACED CURB AND GUTTER
- CLOSED FACE CURB AND GUTTER

N

0 20' 40'

Know what's below. Call 811 before you dig.
BLUE STAKES OF UTAH
UTILITY NOTIFICATION CENTER, INC.
www.bluestakes.org
1-800-662-4111

civilsolutionsgroup inc.
2 NORTH MAIN SUITE 7
PROVIDENCE, UT 84321
P: 435.213.3762
F: 435.213.3778
www.civilsolutionsgroup.net

revisions:

date:	14 FEBRUARY 2012
project number:	201103
drawn by:	D. MACFARLANE
checked by:	D. MACFARLANE
project status:	CONSTRUCTION DOCUMENTS
current as of:	original drawing is 24" x 36"
file path:	C:\Users\Denny\Dropbox\JWL Projects\Uintah County Museum of Natural History\Acad\Civil\Museum CDs\C101 SITE PLAN.dwg

The drawings, specifications, details, and designs represented in these documents, as well as the intellectual property contained therein, are the property of JWL + BDG Architecture. The reproduction, modification, or distribution of these documents in whole or in part, without the express written consent of JWL + BDG Architecture, is strictly prohibited. This prohibition includes, but is not limited to, the reproduction of any portion of the drawings or specifications, including, but not limited to, any graphic representation, any electronic media, or any other medium, whether now known or hereafter developed, without the express written consent of JWL + BDG Architecture. Any violation of this prohibition will be prosecuted to the fullest extent of the law.

COPYRIGHT © 2009 BABCOCK DESIGN GROUP

PROFESSIONAL ENGINEER No. 7630848-2202 DANIEL Y. MACFARLANE 02-14-2012 STATE OF UTAH

stamp:

VERNAL FIELD HOUSE OF NATURAL HISTORY MUSEUM - ADDITION

for:

UTAH STATE PARKS AND RECREATION/ UINTAH COUNTY

470 EAST MAIN STREET VERNAL, UTAH 84078

JWL + BDG Architecture
52 exchange place salt lake city, ut 84111 t 801.531.1146 f 801.363.3733 www.babcockdesign.com

sheet title: CIVIL SITE PLAN/UTILITY PLAN

sheet number: C101

VERNAL FIELD HOUSE OF NATURAL HISTORY MUSEUM - ADDITION
CIVIL GRADING/STORM DRAIN PLAN

SCALE 1"=20'

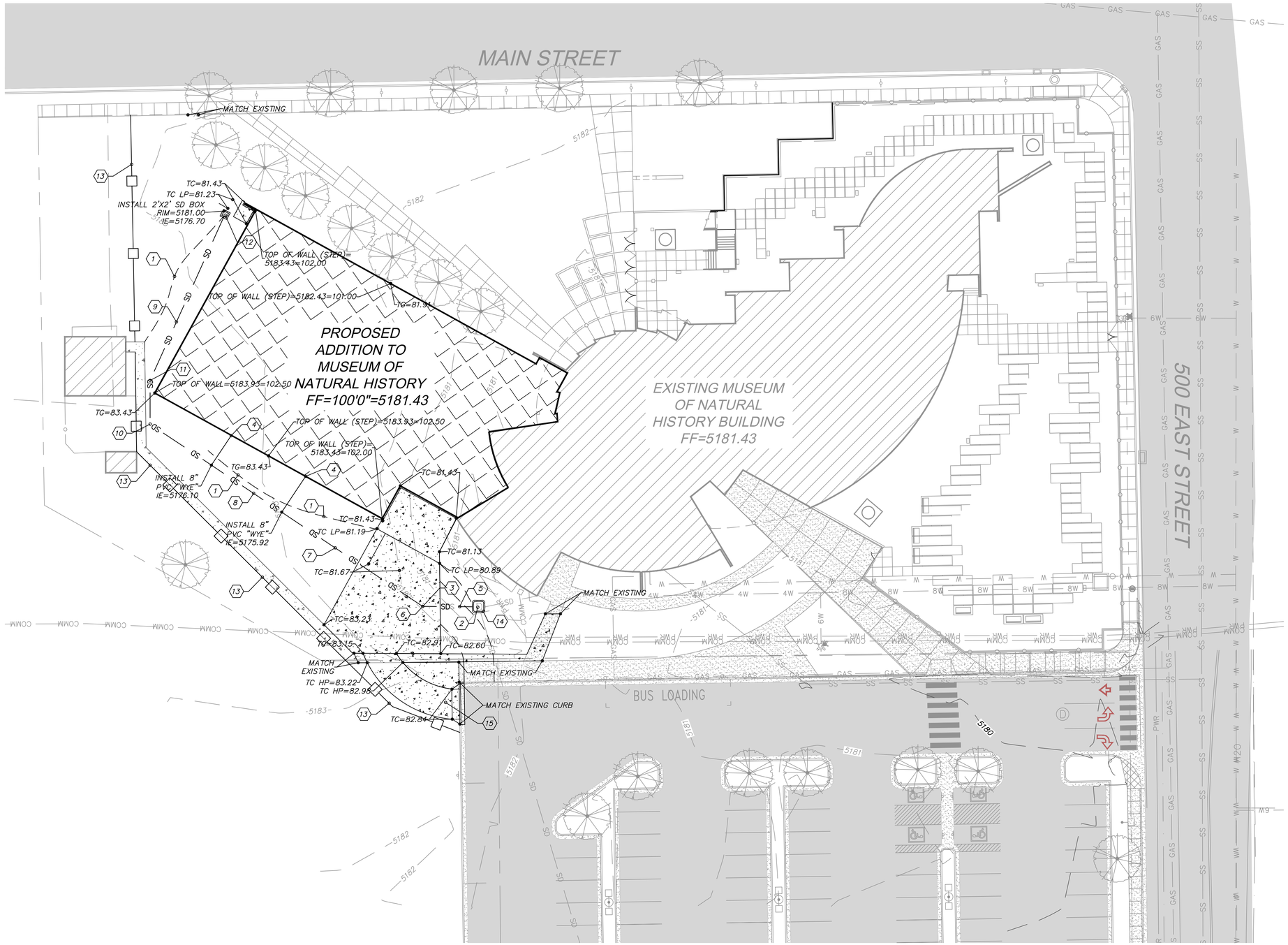

SHEET KEY NOTES:

1. INSTALL LANDSCAPE SWALE WITH 2% SLOPE MINIMUM.
2. EXISTING SUMP TO REMAIN.
   RIM=5180.87
   IE 8" IN E=5176.72
   IE 12" IN W=5175.48
   IE 12" OUT S=5175.42
3. EXISTING END OF STORM DRAIN PIPE STUB TO BE REMOVED.
4. INSTALL STORM DRAIN PIPE TO CONNECT TO ROOF DRAIN PIPES.
5. REMOVE EXISTING PIPE AND INSERT NEW 12" HDPE PIPE @ 0.5% SLOPE.
6. INSTALL HDPE ELBOW CONNECTION IE=5175.59
7. INSTALL 68 LF OF 15" HDPE PIPE AT 0.5% SLOPE.
8. INSTALL 34 LF OF 15" HDPE PIPE AT 0.5% SLOPE.
9. INSTALL 119 LF OF 15" HDPE PIPE AT 0.5% SLOPE.
10. INSTALL HDPE ELBOW CONNECTION IE=5176.25
11. INSTALL HDPE ELBOW CONNECTION IE=5175.34
12. SEE 2'X2' STORM DRAIN BOX #1 ON SHEET C-500.
13. INSTALL SILT FENCE PER STANDARD DETAIL #6 ON SHEET C-500 AND PER THE STORM WATER POLLUTION PREVENTION PLAN (SWPPP).
14. INSTALL GRAVEL SOCK INLET PROTECTION PER STANDARD DETAIL #7 ON SHEET C-500 AND PER THE STORM WATER POLLUTION PREVENTION PLAN (SWPPP).
15. CONTRACTOR SHALL STABILIZE CONSTRUCTION ENTRANCE PER STANDARD DETAIL #8 ON SHEET C-500 AND PER THE STORM WATER POLLUTION PREVENTION PLAN (SWPPP).

GENERAL NOTES:

1. THE TOPOGRAPHIC AND FEATURE SURVEY WAS PROVIDED BY CIVIL SOLUTIONS GROUP, INC. THE SCOPE OF THE SURVEY WAS TO OBTAIN TOPOGRAPHIC AND FEATURE DATA.
2. A METES AND BOUNDS SEARCH WAS CONDUCTED AT THE UINTAH COUNTY RECORDER'S OFFICE AND THE ORIGINAL ALTA SURVEY FOR THE MUSEUM PROJECT WERE REVIEWED TO DETERMINE THE APPROXIMATE BOUNDARY LINE. BASED UPON THE CAD FILE OF THE ALTA SURVEY THE PROPOSED ADDITION IS WITHIN THE PROPERTY CURRENTLY OWNED BY EITHER THE UTAH STATE DIVISION OF PARKS AND RECREATION, UTAH STATE DIVISION OF FACILITIES AND CONSTRUCTION, OR THE MUNICIPAL BUILDING AUTHORITY OF UINTAH COUNTY.
3. REFER TO THE ARCHITECTURAL PLAN FOR FLOOR PLANS OF THE PROPOSED ADDITION.
4. ROOF DRAINS FROM THE ADDITION WILL CONNECT TO THE EXISTING SUMP. THE SUMP WAS INSTALLED DURING CONSTRUCTION OF THE ORIGINAL MUSEUM BUILDING FOR STORAGE OF A FUTURE ADDITION, WHICH CONNECTS TO THE STORM DRAIN SYSTEM IN THE PARKING LOT.
5. THE GAS, POWER, AND COMMUNICATIONS LINES ARE SHOWN BASED UPON COLLECTED MAPS FROM THE UTILITY COMPANIES, INFRASTRUCTURE LOCATIONS, AND OTHER MARKINGS ON SITE.

LEGEND

- BOUNDARY
- RIGHT-OF-WAY/PARCEL LINE
- DRAINAGE/CREEK AREA
- SETBACK LINE
- SD — EX. STORM DRAIN LINE
- CTV — EX. COMMUNICATION LINE
- GAS — EX. GAS LINE
- UG — EX. UNDERGROUND POWER
- SS — EX. SEWER LINE
- 8W — EX. WATER LINE (SIZE SHOWN)
- ADJACENT PARCEL
- 5440 — CONTOUR MINOR EXISTING
- 5440 — CONTOUR MAJOR EXISTING
- 5440 — CONTOUR MINOR PROPOSED
- 5440 — CONTOUR MAJOR PROPOSED
- SD — STORM DRAIN LINE
- GAS — GAS LINE
- PWR — POWER LINE
- SS — SEWER LINE
- 10W — WATER LINE (SIZE SHOWN)
- EXISTING ASPHALT
- PROPOSED ASPHALT
- PROPOSED BUILDING
- 50.00 — EXISTING ELEVATION
- 50.00 — PROPOSED ELEVATION
- CONSTRUCTION LIMIT LINE
- SILT FENCE
- OPEN FACED CURB AND GUTTER
- CLOSED FACE CURB AND GUTTER

N

0 20' 40'

Know what's below. Call 811 before you dig.
BLUE STAKES OF UTAH
UTILITY NOTIFICATION CENTER, INC.
www.bluestakes.org
1-800-662-4111

civilsolutionsgroup inc.
2 NORTH MAIN SUITE 7
PROVIDENCE, UT 84321
P: 435.213.3762
F: 435.213.3778
www.civilsolutionsgroup.net

revisions:

date: 14 FEBRUARY 2012
project number: 201103
drawn by: D. MACFARLANE
checked by: D. MACFARLANE
project status: CONSTRUCTION DOCUMENTS
current as of: original drawing is 24" x 36"
file path: C:\Users\Danny\Documents\My Projects\Civil Solutions Group\Vernal Museum of Natural History\Sheet Files\Museum C3D\C201 GRADING.dwg

The drawings, specifications, details, and designs represented herein are the property of Civil Solutions Group, Inc. and are protected by copyright. Any use, reproduction, or distribution of these drawings, specifications, or designs without the express written consent of Civil Solutions Group, Inc. is prohibited. This work is protected under the copyright laws of the United States of America. Violators will be prosecuted to the full extent of the law. Copyright © 2009 BABCOCK DESIGN GROUP

PROFESSIONAL ENGINEER No. 7233846-2202 DANIEL Y. MACFARLANE 02-14-2012 STATE OF UTAH

Stamp:

VERNAL FIELD HOUSE OF NATURAL HISTORY MUSEUM - ADDITION
for:
UTAH STATE PARKS AND RECREATION/UINTAH COUNTY
470 EAST MAIN STREET VERNAL, UTAH 84078

JWL + BDG Architecture

sheet title: GRADING/STORM DRAIN PLAN

sheet number: C201

52 avenue d'iena sait lake city, ut 84111 t 801.595.1114 f 801.363.3132 www.babcockdesign.com

VERNAL FIELD HOUSE OF NATURAL HISTORY MUSEUM - ADDITION
CIVIL STANDARD DETAILS

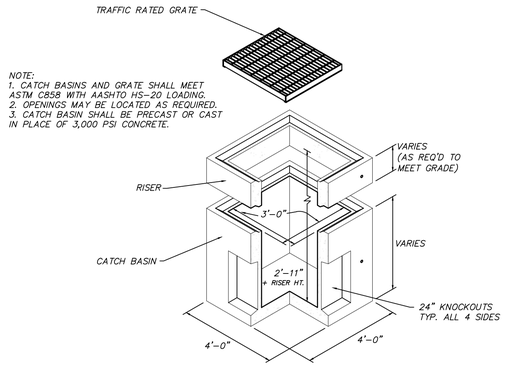

1 / C500 — **3' x 3' JUNCTION BOX WITH GRATE**

NOT TO SCALE

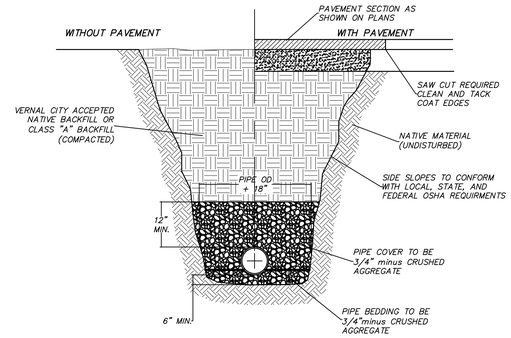

2 / C500 — **EXCAVATION & BACKFILL STORM DRAIN/SEWER/WATER**

NOT TO SCALE

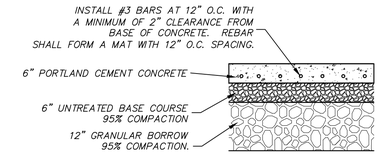

NOTES:
1. PORTLAND CEMENT CONCRETE SHALL HAVE A 28-DAY COMPRESSIVE STRENGTH OF 4,000 POUNDS PER SQUARE INCH.
2. CONCRETE SHALL BE AIR ENTRAINED WITH APPROXIMATELY 6 PERCENT AIR.
3. PROVIDE CONTRACTION JOINTS @ 10'-0" O.C.
4. PROVIDE EXPANSION JOINTS @ 50'-0" O.C.

3 / C500 — **HEAVY DUTY CONCRETE PAVEMENT**

NOT TO SCALE

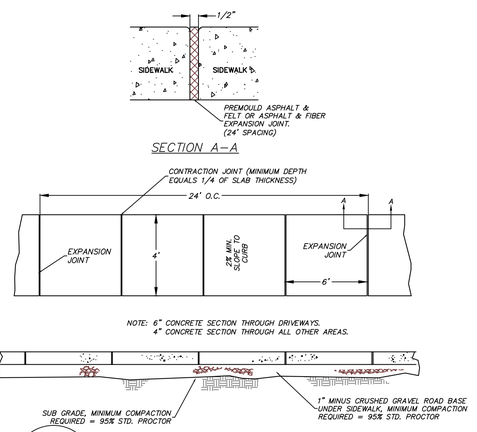

4 / C500 — **4' SIDEWALK DETAIL**

NOT TO SCALE

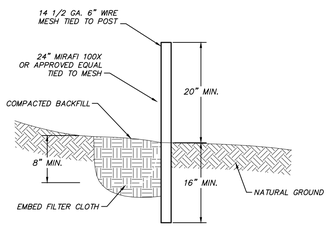

NOTES

1. POSTS SPACED 10' O.C. MAX.
2. FILTER CLOTH TO BE TIED TO MESH EVERY 24" AT TOP AND MIDDLE WITH 6" FOLDED OVERLAP AT VERTICAL SEAMS
3. FENCE SHALL BE MAINTAINED AND ACCUMULATED MATERIAL REMOVED

6 / C500 — **SILT FENCE DETAIL**

NOT TO SCALE

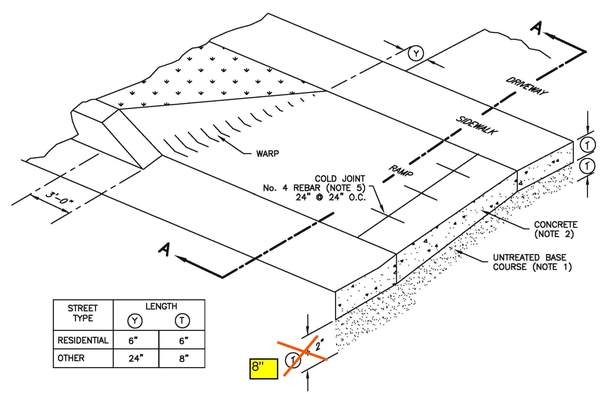

STREET TYPE	LENGTH (Y)	LENGTH (T)
RESIDENTIAL	6"	6"
OTHER	24"	8"

OBLIQUE

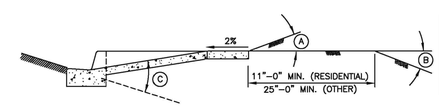

STREET TYPE	BREAKOVER ANGLE (MAXIMUM) (A)	(B)	(C)
RESIDENTIAL	16%	12%	16%
OTHER	6%	8%	10%

SECTION A–A – APPROACH REQUIRING SERVICE TRUCK ACCESS

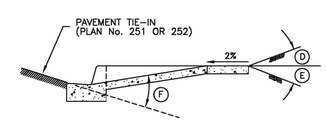

STREET TYPE	BREAKOVER ANGLE (MAXIMUM) (D)	(E)	(F)
RESIDENTIAL	16%	12%	16%
OTHER	6%	8%	10%

SECTION A–A – TYPICAL DRIVEWAY APPROACH

Flare driveway approach - type A

December, 2005 — 39 — Plan No. **221** — Drawing 1 of 2

5 / C500 — **APWA FLARE DRIVEWAY APPROACH (PLAN NO. 221**

NOT TO SCALE

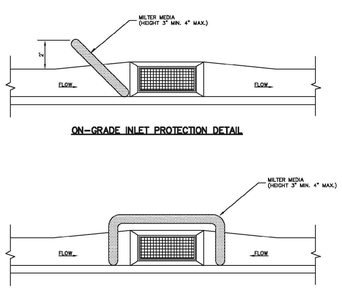

Inlet protection - gravel sock

September 2006 — 11 — Plan No. **124** — Drawing 1 of 3

7 / C500 — **GRAVEL SOCK INLET PROTECTION**

DETAIL SOURCE: APWA 2007 STANDARD DETAILS

NOT TO SCALE

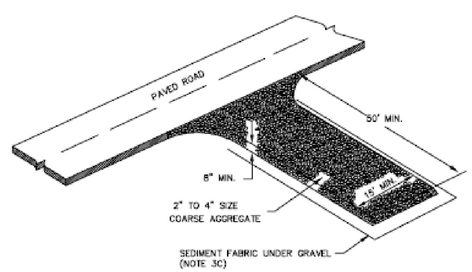

Stabilized roadway entrance

Plan No. **126**

8 / C500

Know what's below. Call 811 before you dig.
BLUE STAKES OF UTAH
UTILITY NOTIFICATION CENTER, INC.
www.bluestakes.org
1-800-662-4111

civilsolutionsgroup inc.
2 NORTH MAIN SUITE 7
PROVIDENCE, UT 84321
P: 435.213.3762
F: 435.213.3778
www.civilsolutionsgroup.net

revisions:

date: 14 FEBRUARY 2012
project number: 201103
drawn by: D. MACFARLANE
checked by: D. MACFARLANE
project status: CONSTRUCTION DOCUMENTS
current as of: 01/11/2012 10:11 AM
file path: G:\Users\Danny\Documents\VN\Projects\Cad\Vernal Museum CDs.dwg
original drawing is 24" x 36"

The drawings, specifications, details, and designs represented in these documents are the property of the Architect and shall be returned upon completion of the project. They are intended for use only on this project and may not be used on other projects. They are intended for use by the owner and other persons directly involved with the project. Reproduction or other use by other persons, or other purposes without written permission of the Architect, violates the rights of the Architect and is prohibited by law.
COPYRIGHT © 2009 babcock design group

PROFESSIONAL ENGINEER No. 7233846-2202 DANIEL Y. MACFARLANE 02.14.2012 STATE OF UTAH

Seal/Stamp:

VERNAL FIELD HOUSE OF NATURAL HISTORY MUSEUM - ADDITION for:

470 EAST MAIN STREET VERNAL, UTAH 84078

UTAH STATE PARKS AND RECREATION / UINTAH COUNTY

JWL + BDG Architecture
52 exchange place salt lake city, ut 84111 | 801.531.1146 | f 801.363.3132 | www.babcockdesign.com

sheet title: STANDARD DETAILS

sheet number: C500

ABBREVIATIONS

A/C	AIR CONDITIONING
ACST	ACOUSTICAL
ADDM	ADDENDUM
ADJ	ADJUSTABLE
ALLOW	ALLOWANCE
ALUM	ALUMINUM
APPROX	APPROXIMATE
BLDG	BUILDING
BLK	BLOCK
BRK	BRICK
BU	BUILT-UP
BW	BOTH WAYS
CI	CAST IRON
CJ	CONTROL JOINT
CLG	CEILING
CMU	CONCRETE MASONRY UNIT
COL	COLUMN
COMP	COMPACTED/COMPOSITE
CONC	CONCRETE
CONST	CONSTRUCTION
CONT	CONTINUOUS
CONTR	CONTRACTOR
DF	DRINKING FOUNTAIN
DIA	DIAMETER
DIM	DIMENSION
DN	DOWN
DTL	DETAIL
DWG	DRAWING
EA	EACH
EXF	EXHAUST FAN
EIFS	EXT. INSUL. FINISH SYSTEM
EJ	EXPANSION JOINT
ELEC	ELECTRIC/ELECTRICAL
ELEV	ELEVATION
EQ	EQUAL
EXIST	EXISTING
EXT	EXTERIOR
FD	FLOOR DRAIN
FDN	FOUNDATION
FIN	FINISH
FLR	FLOOR
FR	FIRE RATED
FTG	FOOTING
G	GAS
GA	GAUGE
GALV	GALVANIZED
GI	GALVANIZED IRON
GRD	GRADE
GLB	GLU-LAM BEAM
GYB	GYPSUM BOARD
HB	HOSE BIBB
HDR	HEAD
HM	HOLLOW METAL
HORZ	HORIZONTAL
ID	INSIDE DIAMETER
INSUL	INSULATION
INT	INTERIOR
IRRG	IRRIGATION
JB	JAMB
JNT	JOINT
MAX	MAXIMUM
MECH	MECHANICAL
MFR	MANUFACTURER
MIN	MINIMUM
MR	MOISTURE RESISTANT
NIC	NOT IN CONTRACT
NTS	NOT TO SCALE
NO	NUMBER
OC	ON CENTER
OD	OUTSIDE DIAMETER
OFD	OVERFLOW DRAIN
OPNG	OPENING
PLYWD	PLYWOOD
PNT	PAINT
PNTD	PAINTED
PR	PAIR
R&S	ROD AND SHELF
RAD	RADIUS
RD	ROOF DRAIN
REG	REGULAR
REINF	REINFORCED/REINFORCING
REQD	REQUIRED
REV	REVISED
RM	ROOM
RO	ROUGH OPENING
RS	ROUGH-SAWN
SC	SOLID CORE
SCHED	SCHEDULE
SHT	SHEET
SIM	SIMILAR
SPEC	SPECIFICATION
STD	STANDARD
STL	STEEL
STOR	STORAGE
STRUC	STRUCTURAL
SYS	SYSTEM
T&B	TOP AND BOTTOM
T&G	TONGUE AND GROOVE
TO	TOP OF
TOF	TOP OF FOOTING
TOW	TOP OF WALL
TYP	TYPICAL
TS	TUBE STEEL
UNO	UNLESS NOTED OTHERWISE
VERT	VERTICAL
W	WATER
W/	WITH
WD	WOOD
WP	WATERPROOF
WR	WATER RESISTANT
WWF	WELDED WIRE FABRIC
WWM	WELDED WIRE MESH

ELECTRICAL SYMBOLS

ELECTRICAL SYMBOLS

MARK	DESCRIPTION
	CEILING SURFACE MOUNTED
	CEILING PENDANT
	SURFACE MOUNTED
P.C.	SURFACE MOUNTED PULL CHAIN
	RECESSED DOWN LIGHT
	RECESSED WALL WASHER
	RECESSED 6" CAN LIGHT/FAN COMBO FIXTURE
W.P.	RECESSED WATERPROOF 6" CAN LIGHT FIXTURE
	EXHAUST FAN
S	INTER-CONNECTING SMOKE DETECTOR
	CONVENIENCE OUTLET 110V.
	CONVENIENCE OUTLET 220V.
	HALF-SWITCHED DUPLEX OUTLET
GFI	GROUND FAULT INDICATOR DUPLEX OUTLET
W.P.	WEATHER PROOF CONVENIENCE OUTLET
	FOURPLEX OUTLET
	FLOOR OUTLET
$	SINGLE SWITCH
$3	3-WAY SWITCH
$4	4-WAY SWITCH
	LIGHT TRAC
F	EXHAUST FAN
J	JUNCTION BOX
	TELEVISION OUTLET
	JUNCTION BOX
	HEAVY DUTY GARAGE DOOR OPENER
	TELEPHONE OUTLET
	TELEVISION OUTLET
	FLUORESCENT TUBE FIXTURE
	CEILING FAN

MATERIALS AND LINE TYPES

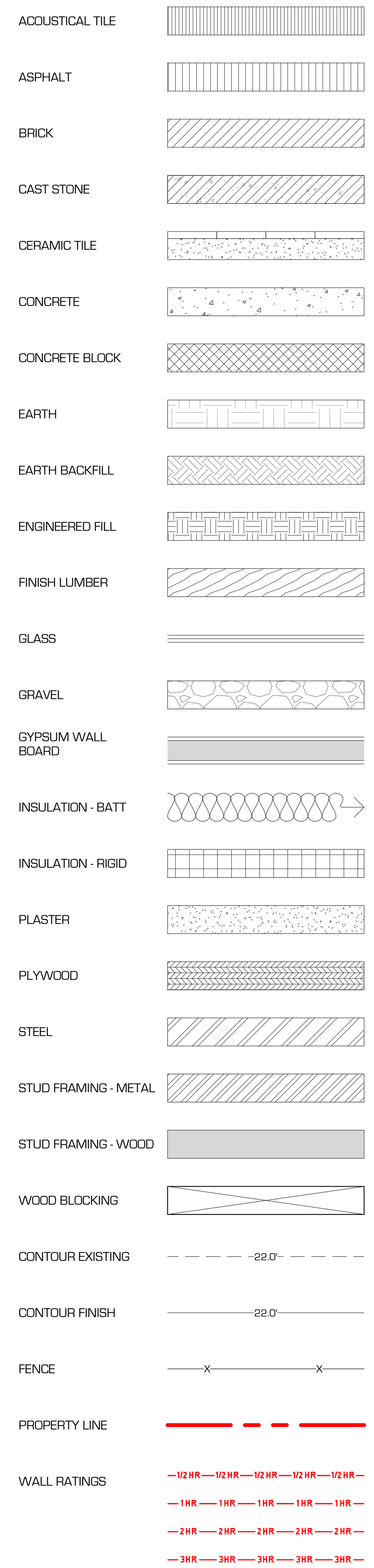

SYMBOLS LEGEND

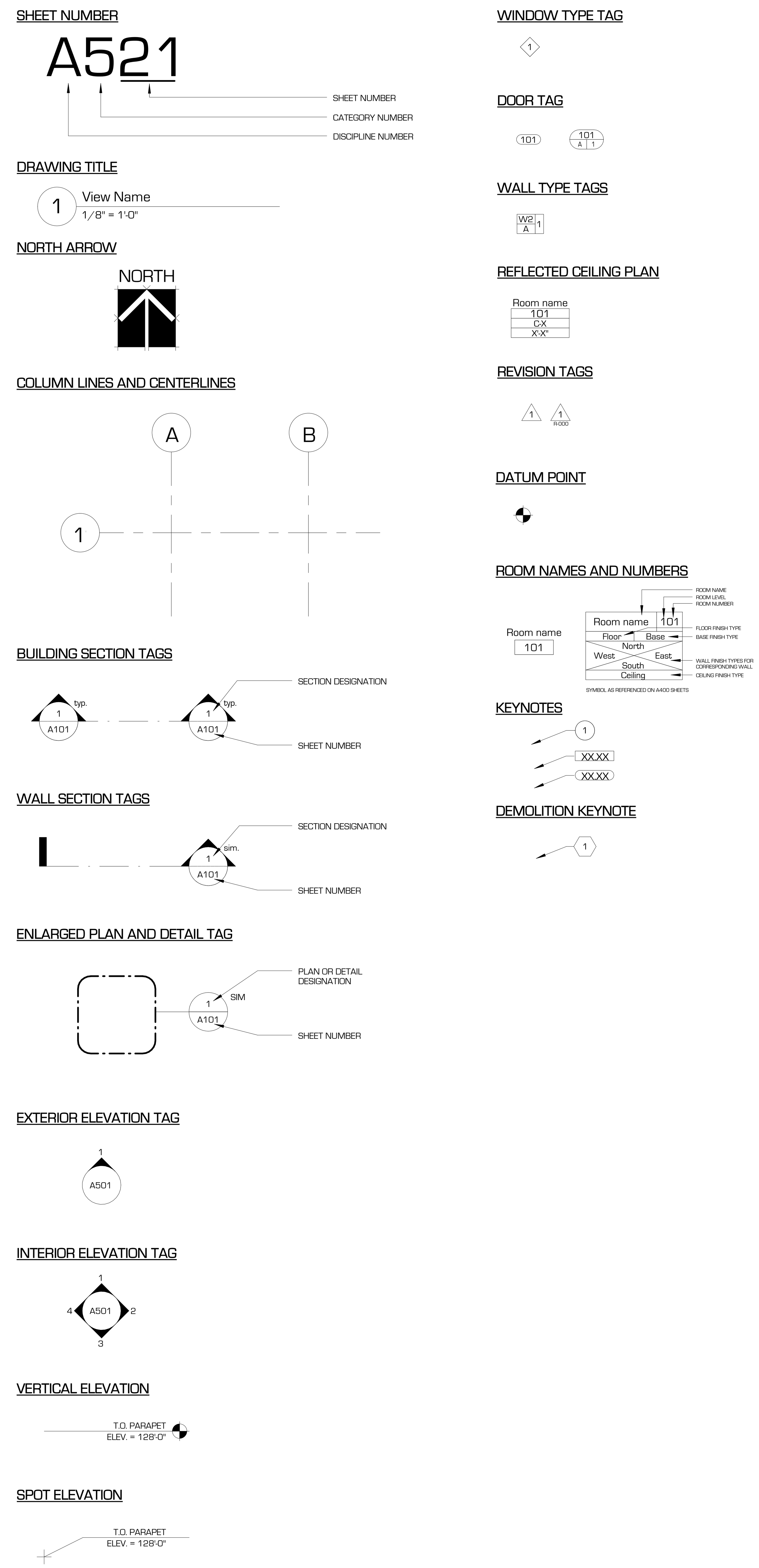

GENERAL NOTES

1. THE CONTRACTOR SHALL BE RESPONSIBLE FOR OBTAINING ANY AND ALL PERMITS THAT ARE REQUIRED BEFORE AND DURING THE CONSTRUCTION PROCESS PRIOR TO THE COMMENCEMENT OF ANY WORK, AND SHALL BE REQUIRED TO CONTACT THE PROPER AUTHORITIES HAVING JURISDICTION.

2. THE CONTRACTOR SHALL CAREFULLY READ, STUDY, AND UNDERSTAND ALL PLANS AND SPECIFICATIONS FOR TRADES. COORDINATION BETWEEN TRADES WILL BE NECESSARY AND THE RESPONSIBILITY OF THE CONTRACTOR. ANY QUESTIONS THAT ARISE SHALL BE CLARIFIED BY THE ARCHITECT PRIOR TO CONSTRUCTION.

3. CONTRACTOR WILL VERIFY ALL CONDITIONS, DIMENSIONS AND ELEVATIONS, ETC., AT THE SITE AND WILL COORDINATE WORK PERFORMED BY ALL TRADES.

4. DRAWINGS ARE NOT TO BE SCALED. DIMENSIONAL DISCREPANCIES ARE TO BE CLARIFIED WITH THE ARCHITECT BEFORE PROCEEDING WITH CONSTRUCTION.

5. CONTRACTOR SHALL VERIFY ALL EXISTING UTILITIES PRIOR TO EXCAVATION. CONTACT BLUE-STAKE OR AUTHORITIES HAVING JURISDICTION.

6. CONTRACTOR WILL NOTIFY ARCHITECT / ENGINEER OF ANY DISCREPANCIES, OMISSIONS OR CONFLICTS BETWEEN THE VARIOUS ELEMENTS OF THE WORKING DRAWINGS AND/OR SPECIFICATIONS BEFORE PROCEEDING WITH ANY WORK INVOLVED. IN ALL CASES, UNLESS OTHERWISE DIRECTED, THE MOST STRINGENT REQUIREMENTS WILL GOVERN.

7. THE ARCHITECT'S APPROVAL MUST BE OBTAINED FOR ANY DEVIATIONS FROM THE CONSTRUCTION DOCUMENTS, INCLUDING BUT NOT LIMITED TO CHANGES IN DIMENSIONS, DESIGN, MATERIALS, PRODUCTS, AND FINISHES. IN NO CASE MAY THE CONTRACTOR MAKE THESE CHANGES WITHOUT THE APPROVAL OF THE ARCHITECT.

8. SHOP DRAWINGS AND OTHER SUBMITTALS ARE TO BE PRESENTED TO THE ARCHITECT FOR REVIEW PRIOR TO EXECUTION OF WORK. ALLOW APPROPRIATE TIME FOR REVIEW. COORDINATE WITH ADDITIONAL GENERAL NOTES, ENERGY CONSERVATION NOTES, AND STRUCTURAL NOTES.

9. SHOP DRAWINGS WILL BE PROVIDED TO THE CONTRACTOR BY SUPPLIER OR PRODUCT MANUFACTURER PRIOR TO INSTALLATION, FABRICATION, OR ERECTION OF ANY PREFABRICATED OR MANUFACTURER DESIGNED COMPONENTS. THESE DRAWINGS WILL BE STAMPED BY A PROFESSIONAL ENGINEER REGISTERED IN THE STATE WHERE THIS STRUCTURE RESIDES. COPIES OF THE SHOP DRAWINGS ARE TO BE PROVIDED TO THE ARCHITECT FOR REVIEW PRIOR TO ORDERING OR INSTALLATION.

10. ALL CONSTRUCTION SHALL CONFORM TO AND STRICTLY COMPLY WITH ALL APPLICABLE CODES INCLUDING THE 2006 INTERNATIONAL BUILDING CODE, COVENANTS AND RESTRICTIONS AND SALT LAKE CITY BUILDING AND HOUSING STANDARDS.

11. IN NO EVENT SHALL THE CONTRACTOR SUBSTITUTE A STANDARD CONSTRUCTION DETAIL FOR A DETAIL SPECIFIED IN THESE DOCUMENTS. THE CONTRACTOR SHALL BRING ALL WORK INTO CONFORMITY WITH THE CONSTRUCTION DOCUMENTS, AS THE ARCHITECT ORDERS, BEFORE APPROVAL OF THAT CONSTRUCTION WILL BE GRANTED. NOTES AND DETAILS ON THE DRAWINGS WILL TAKE PRECEDENCE OVER GENERAL NOTES AND TYPICAL DETAILS.

12. IN INSTANCES WHERE ITEMS ARE TO BE SELECTED BY OWNER, THE DETAILS PROVIDED BY THE ARCHITECT ARE OF A GENERIC NATURE. IT IS THE RESPONSIBILITY OF THE GENERAL CONTRACTOR TO COORDINATE THE SELECTED MANUFACTURER'S SPECIFIC DETAILS WITH THE PROVIDED DETAILS AND ADJUST CONSTRUCTION ACCORDINGLY. IN SUCH INSTANCES CONSULT WITH THE ARCHITECT / ENGINEER PRIOR TO INSTALLATION. THE SELECTED MANUFACTURER'S RECOMMENDED INSTALLATION PROCEDURES, INDUSTRY STANDARDS, AND APPLICABLE CODE REQUIREMENTS MUST BE FOLLOWED.

13. IN INSTANCES WHERE ITEMS ARE TO BE SELECTED BY OWNER, ORDERING, DELIVERY, OR INSTALLATION WILL NOT TAKE PLACE UNTIL WRITTEN AUTHORIZATION IS OBTAINED FROM THE OWNER OR OWNER'S AGENT.

14. ALL WATER HEATERS ARE TO HAVE SEISMIC TIE DOWNS. PROVIDE AN UNOBSTRUCTED WORKING SPACE NOT LESS THAN 30" IN DEPTH, AND A CLEAR ACCESS OF 36" IN WIDTH IN FRONT OF FIREBOX.

15. PROVIDE A CONTINUOUS BEAD OF ELASTOMERIC SEALANT OR APPROPRIATE CAULKING MATERIAL AT ALL INTERIOR AND EXTERIOR JOINTS BETWEEN DISSIMILAR MATERIALS.

16. REFER TO STRUCTURAL DRAWINGS FOR ALL FOOTINGS AND FOUNDATION WALLS, CONCRETE REINFORCING, BEARING WALLS, SHEAR WALLS, COLUMNS, BEAMS, PRIMARY STRUCTURAL FRAMES, FLOOR FRAMING, ROOF FRAMING, SECONDARY FRAMING, AND ASSOCIATED CONNECTION DETAILS. COORDINATE ALL RELATED WORK WITH GENERAL STRUCTURAL NOTES, SCHEDULES, AND DETAILS.

17. REFER TO ELECTRICAL DRAWINGS FOR ALL ELECTRICAL EQUIPMENT, PANEL LOCATIONS, WIRING DIAGRAMS, AND FIXTURE LOCATIONS. COORDINATE ANY RELATED WORK WITH GENERAL ELECTRICAL NOTES AND ELECTRICAL FIXTURE SCHEDULES.

18. REFER TO MECHANICAL DRAWINGS FOR ALL MECHANICAL EQUIPMENT, DUCT WORK, MECHANICAL PIPING, AND EXHAUST. COORDINATE ANY RELATED WORK WITH GENERAL MECHANICAL NOTES, SCHEDULES, AND DETAILS.

19. REFER TO PLUMBING DRAWINGS FOR ALL PLUMING EQUIPMENT, FIXTURES, AND RELATED PIPING. I.E.: STORM SEWER, SANITARY SEWER, AND DOMESTIC WATER SUPPLY. COORDINATE ANY RELATED WORK WITH GENERAL PLUMBING NOTES, SCHEDULES, AND DETAILS.

20. CONTRACTOR AND ALL SUBCONTRACTORS WILL PERFORM THEIR TRADES AND DUTIES IN A MANNER CONFORMING TO THE PROCEDURES AND REQUIREMENTS AS STATED IN THE 2003 INTERNATIONAL BUILDING CODE, (OR LATEST ACCEPTED CODE ADOPTED BY THE LOCAL BUILDING OFFICIALS). THE CONTRACTOR WILL COORDINATE ALL REQUIRED INSPECTIONS AND WILL NOT PROCEED WITH WORK UNTIL THE REQUIRED INSPECTIONS HAVE BEEN COMPLETED.

21. ANY SPECIAL INSPECTION REQUIRED BY THE BUILDING OFFICIAL OR THE BUILDING CODE ARE NOT THE RESPONSIBILITY OF THE ARCHITECT.

22. CONTRACTOR WILL BE RESPONSIBLE FOR SAFETY AND PROTECTION WITHIN AND ADJACENT TO THE JOB SITE.

23. DURING CONSTRUCTION OPEN EXCAVATIONS AND TRENCHES WILL BE SUPPORTED AND BARRICADED BY CONTRACTOR TO CONFORM WITH OSHA SAFETY STANDARDS.
24. TEMPORARY BRACING WILL BE PROVIDED WHEREVER NECESSARY TO TAKE CARE OF ALL LOADS TO WHICH THE STRUCTURE MAY BE SUBJECTED, INCLUDING WIND. SUCH BRACING WILL BE LEFT IN PLACE AS LONG AS MAY BE REQUIRED FOR SAFETY, OR UNTIL ALL THE STRUCTURAL ELEMENTS ARE COMPLETE.
25. THE PRIMARY STRUCTURAL STEEL FRAMES, ROOF FRAMING, ROOFING MATERIALS, MISCELLANEOUS STEEL BUILDING COMPONENTS, AND ASSOCIATED DESIGN LOAD CALCULATIONS ARE PROVIDED BY AN INDEPENDENT PRE ENGINEERED METAL BUILDING MANUFACTURER. FOR SPECIFIC INFORMATION AND INSTRUCTION REGARDING THESE ASSEMBLIES, REFER TO THE CONSTRUCTION / ERECTION DOCUMENTS AS PROVIDED BY THE BUILDING MANUFACTURER . THE ARCHITECT ASSUMES NO LIABILITY FOR THE PROVIDED PRE ENGINEERED METAL BUILDING ELEMENTS AND/OR THEIR DESIGN.

26. PROVIDE AN OBVIOUS TURN OFF FOR WATER SUPPLY IN MECH. AREA

27. FINISH GRADE TO SLOPE AWAY FROM STRUCTURE 6" MIN. IN FIRST 10' AND 2% THERE AFTER. COORDINATE WITH CIVIL.

28. ALL DIMENSIONS ARE TO FACE OF STUD OR TO FACE OF FOUNDATION WALL UNLESS OTHERWISE NOTED

29. ALL WOOD IN CONTACT WITH CONCRETE SHALL BE TREATED.

30. COORDINATE WITH FRAMING PLANS FOR LOCATIONS OF COLUMNS, BEAMS, MOMENT FRAMES, ETC.

31. VISITS TO THE JOB SITE BY THE ARCHITECT OR HIS CONSULTANTS DO NOT CONSTITUTE APPROVAL OF THE WORK PERFORMED BY THE GENERAL CONTRACTOR OR HIS SUBCONTRACTORS. ANY SUCH VISITS ARE SOLELY FOR THE PURPOSE OF OBSERVING THE WORK BEING PERFORMED.

revisions:
num. | description | date

date: 15 FEBRUARY 2012
project number: 201103
drawn by: Author
checked by: Checker
project status: 100% DFCM REVIEW
current as of: 2/15/2012 2:42:30 PM
original drawing is 24" x 36"
file path: T:\BabcockDesign\Vernal Field House Addition\Architectural\2012-02-13\201103 Vernal Natural History Museum Addition.rvt

The drawings, specifications, designs, and images represented herein are considered by law the architect's instruments of service and are the property of Babcock Design Group, Inc. They are available for limited review and evaluation by clients, consultants, contractors, government agencies, vendors, and office personnel only in accordance with this notice. They are intended for use only for the project specified and are to be used for no other purpose or project including additions to or modification of the completed project. No part thereof may be copied, reproduced, photographed, modified, published, uploaded, transmitted, disclosed, sold, distributed to others in any way including in digital form, or otherwise used without the prior written consent of Babcock Design Group, Inc.
COPYRIGHT © 2009 BABCOCK DESIGN GROUP

stamp:

VERNAL FIELD HOUSE OF NATURAL HISTORY MUSEUM - ADDITION

for:

UTAH STATE PARKS AND RECREATION/UINTAH COUNTY
470 EAST MAIN STREET VERNAL, UTAH 84078

JWL + BDG Architecture

52 exchange place salt lake city, ut 84111 t: 801.531.1144 f: 801.363.3132
www.babcockdesign.com

sheet title:
GENERAL NOTES, LEGENDS, ABBREVIATIONS, AND SYMBOLS

sheet number:
A001

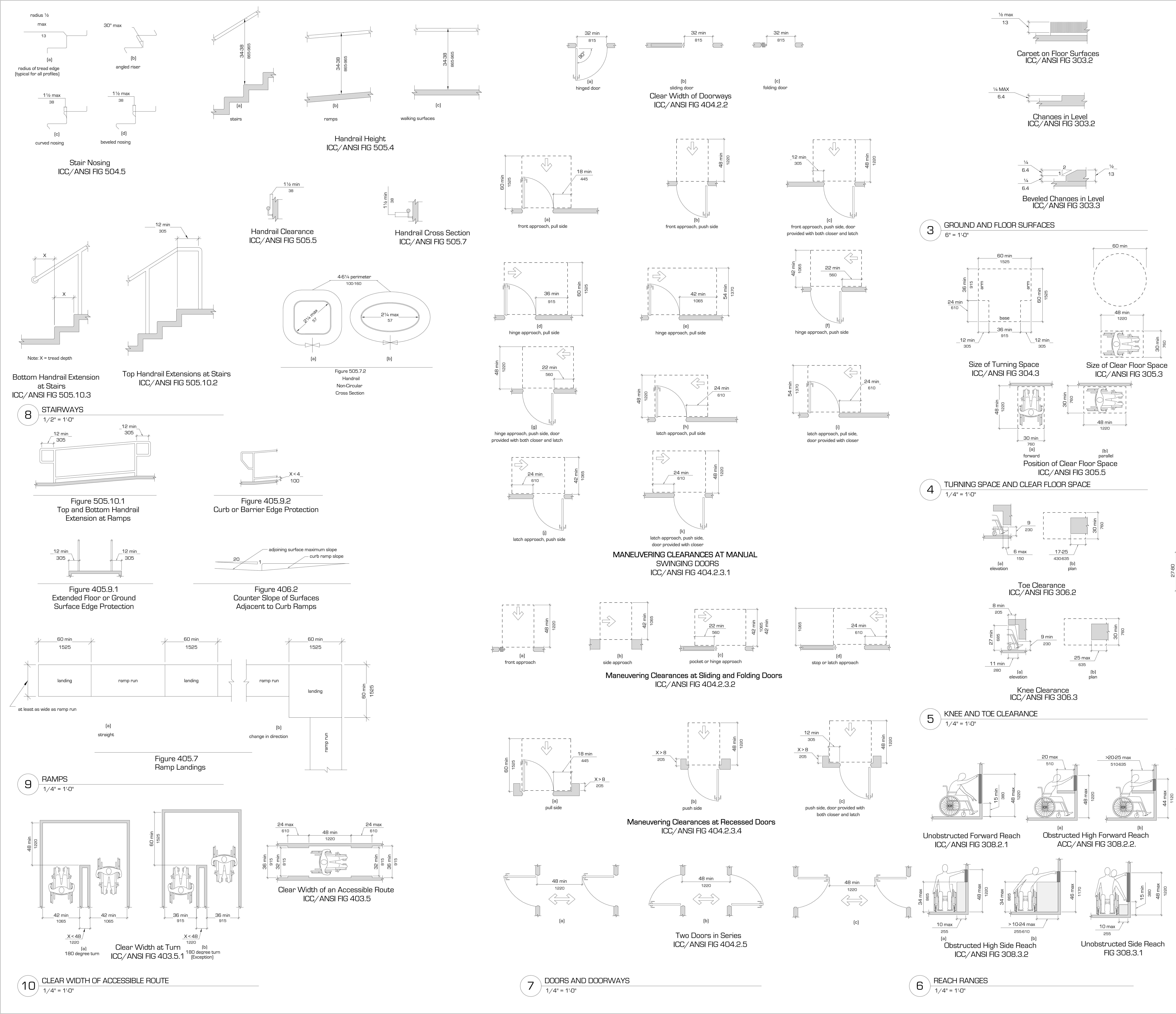

This Drawing Produced by the U.S. Access Board

CONVENTION	DESCRIPTION
36 / 915	Dimension showing English units (in inches unless otherwise specified) above the line and SI units (in millimeters unless otherwise specified) below the line
6 / 150	dimension for small measurements
33-36 / 840-915	dimension showing a range with minimum - maximum
Min	Minimum
Max	Maximum
>	greater than
>=	greater than or equal to
<	less than
<=	less than or equal to
	boundary of clear floor space or maneuvering clearance
℄	Centerline
	a permitted element or its extension
	direction of travel or approach
	a wall, floor, ceiling or other element cut in section or plan
	a highlighted element in elevation or plan
	location zone of element, control or feature

Figure 104
GRAPHIC CONVENTION FOR FIGURES

THE PROJECT IS TO MEET THE 2006 IBC AND THE ICC/ANSI A117.1-2003 CODES FOR ACCESSIBILITY. THE MOST STRINGENT REQUIREMENTS SHALL BE UTILIZED IN THE CONSTRUCTION OF THIS PROJECT. THE FOLLOWING DIAGRAMS AND NOTES ARE PROVIDED ONLY AS A GUIDE TO THIS PROJECT. THE CONTRACTOR SHALL BE FAMILIAR WITH ALL CODES AND NOTIFY THE ARCHITECT IF THESE NOTES AND DIAGRAMS ARE CONTRADICTORY TO THE ACTUAL CONSTRUCTION. CONSTRUCTION SHALL COMPLY WITH ALL APPLICABLE CODES. IF THERE IS A DISCREPANCY, THE ADOPTED CODES AND ENFORCED LAWS TAKE PRECEDENCE.

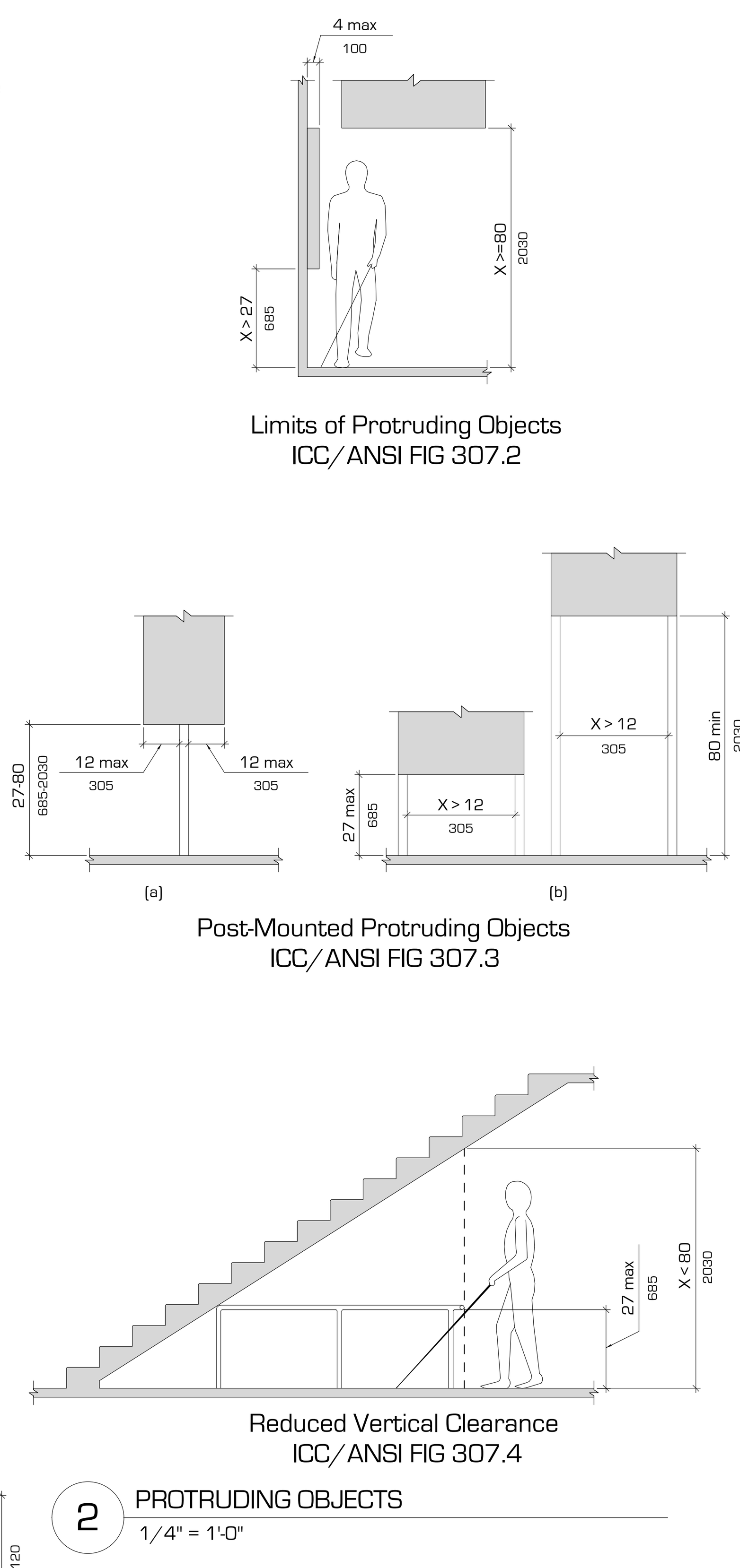

revisions:

num.	description	date

date: 15 FEBRUARY 2012
project number: 201103
drawn by: WB, JB
checked by: WB, JB
project status: 100% DFCM REVIEW
current as of: 2/15/2012 2:42:33 PM original drawing is 24" x 36"
file path: T:\BabcockDesign\Vernal Field House Addition\Architectural\2012-02-13\201103 Vernal Natural History Museum Addition.rvt

The drawings, specifications, designs, and images represented herein are considered by law the architect's instruments of service and are the property of Babcock Design Group, Inc. They are available for limited review and evaluation by clients, consultants, contractors, government agencies, vendors, and office personnel only in accordance with this notice. They are intended for use only for the project specified and are to be used for no other purpose or project including additions to or modification of the completed project. No part thereof may be copied, reproduced, photographed, modified, published, uploaded, transmitted, disclosed, sold, distributed to others in any way including in digital form, or otherwise used without the prior written consent of Babcock Design Group, Inc.
COPYRIGHT © 2009 BABCOCK DESIGN GROUP

stamp:

VERNAL FIELD HOUSE OF NATURAL HISTORY MUSEUM - ADDITION

for:
UTAH STATE PARKS AND RECREATION/UINTAH COUNTY
470 EAST MAIN STREET VERNAL, UTAH 84078

JWL + BDG Architecture
52 exchange place salt lake city, ut 84111 t: 801 531 1144 f: 801 363 3132
www.babcockdesign.com

sheet title:
ADA NOTES AND DETAILS

sheet number:
A020

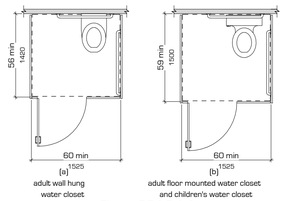

Figure 604.8.1.1
Size of Wheelchair
Accessible Toilet Compartment

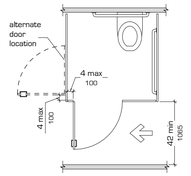

Figure 604.8.1.2
Wheelchair
Accessible Toilet
Compartment Doors

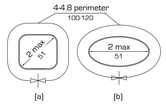

Figure 609.2.2
Grab Bar Non-Circular
Cross Section

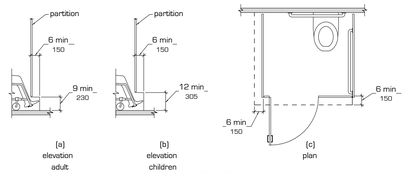

Figure 604.8.1.4
Wheelchair Accessible Toilet
Compartment Toe Clearance

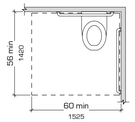

Figure 604.3.1
Size of Clearance at
Water Closets

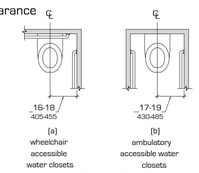

Figure 604.3.2 [Exception]
Overlap of Water Closet Clearance

Figure 604.2
Water Closet Location

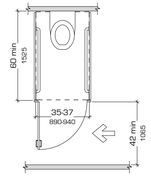

Figure 604.8.2
Ambulatory Accessible
Toilet Compartment

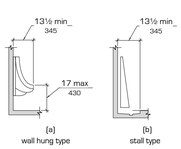

Figure 605.2
Height and Depth of Urinals

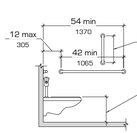

Figure 604.5.1
Side Wall Grab Bar
at Water Closets

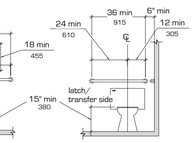

Figure 604.5.2
Rear Wall Grab Bar
at Water Closets

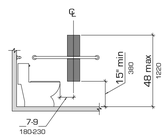

Figure 604.7
Dispenser Outlet Location

4 TOILET COMPARTMENTS
1/4" = 1'-0"

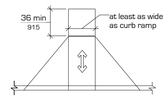

Figure 406.4
Landings at the
Top of Curb Ramps

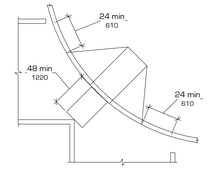

Figure 406.6
Diagonal or Corner Type Curb Ramps

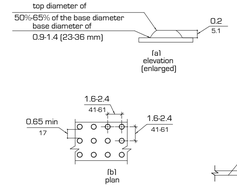

Figure 705.1
Size and Spacing of
Truncated Domes

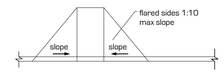

Figure 406.3
Sides of Curb Ramps

2 CURB RAMPS
1/8" = 1'-0"

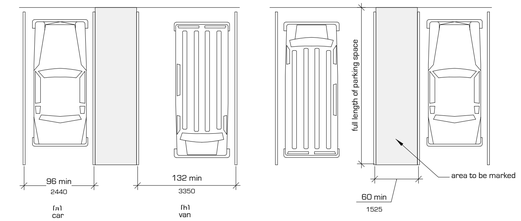

Figure 502.2
Vehicle Parking Spaces

Figure 502.3
Parking Space Access Aisle

1 ACCESSIBLE PARKING SPACES
1/8" = 1'-0"

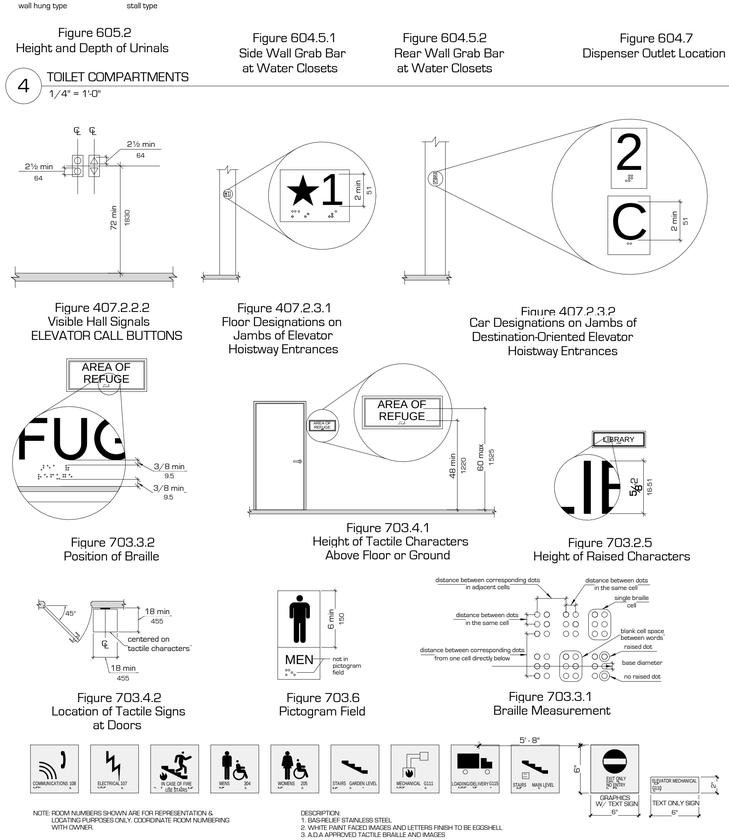

Figure 407.2.2.2
Visible Hall Signals
ELEVATOR CALL BUTTONS

Figure 407.2.3.1
Floor Designations on
Jambs of Elevator
Hoistway Entrances

Figure 407.2.3.2
Car Designations on Jambs of
Destination-Oriented Elevator
Hoistway Entrances

Figure 703.3.2
Position of Braille

Figure 703.4.1
Height of Tactile Characters
Above Floor or Ground

Figure 703.2.5
Height of Raised Characters

Figure 703.4.2
Location of Tactile Signs
at Doors

Figure 703.6
Pictogram Field

Figure 703.3.1
Braille Measurement

NOTE: ROOM NUMBERS SHOWN ARE FOR REPRESENTATION & LOCATING PURPOSES ONLY. COORDINATE ROOM NUMBERING WITH OWNER.

DESCRIPTION:
1. BAS-RELIEF STAINLESS STEEL
2. WHITE PAINT FACED IMAGES AND LETTERS FINISH TO BE EGGSHELL
3. A.D.A. APPROVED TACTILE BRAILLE AND IMAGES

5 SIGNAGE
1/4" = 1'-0"

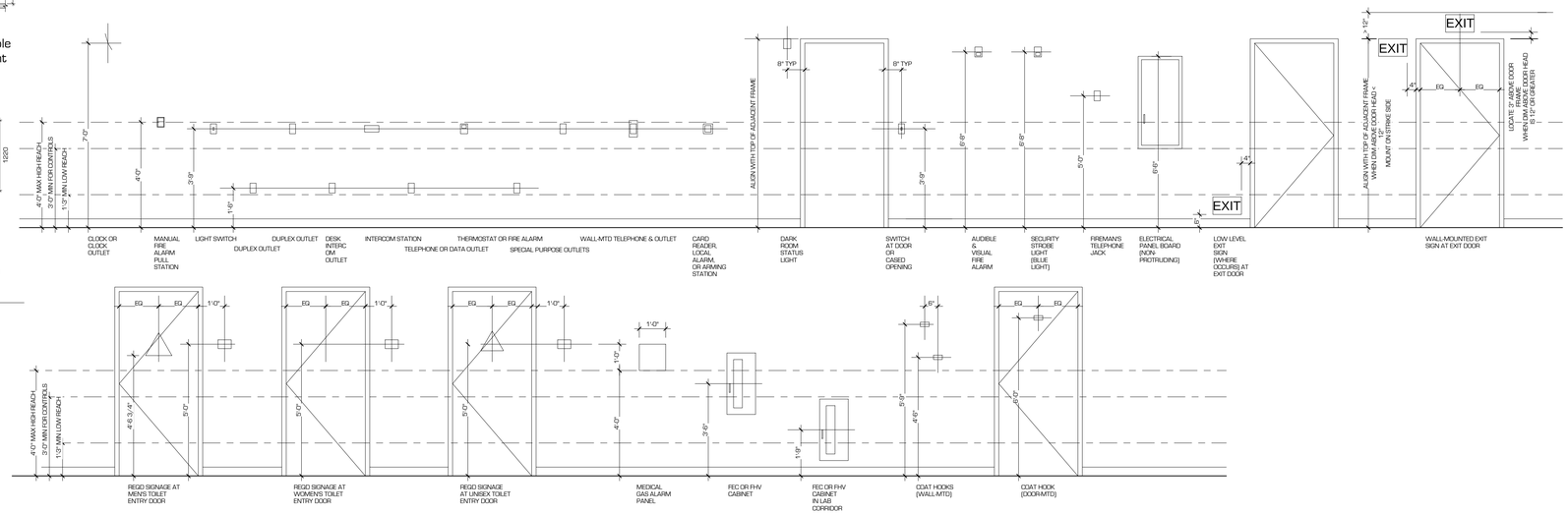

3 FIXTURE & SIGNAGE HEIGHTS
3/8" = 1'-0"

revisions:		
mark:	description	date

date: 15 FEBRUARY 2012
project number: 201103
drawn by: WB, JB
checked by: WB, JB
project status: 100% DFCM REVIEW
current: as of: 2/15/2012 2:42:38 PM
file path: original drawing is 24" x 36"
Z:\Projects\2011 Projects\201103 Vernal Natural History Museum Addition_Architecture\01 DESIGN\01 SD\201103 Vernal Natural

The drawings, specifications, designs and other documents are considered to be the exclusive property of JWL + BDG Architecture and are protected by federal copyright laws. Reproduction of these documents, in whole or in part, without the express written consent of JWL + BDG Architecture is prohibited. Any reproduction or any modification of the contained designs, plans and specifications without the express written consent of JWL + BDG Architecture is prohibited. Any unauthorized use of these documents shall be at the sole risk of the user. This prohibition includes any reproduction or modification of the contained designs, plans and specifications by any means, including but not limited to, digital form, or otherwise used without the prior written consent of Babcock Design Group, Inc.
COPYRIGHT © 2009 BABCOCK DESIGN GROUP

stamp:

VERNAL FIELD HOUSE OF NATURAL HISTORY MUSEUM - ADDITION

for:

UTAH STATE PARKS AND RECREATION/UINTAH COUNTY

470 EAST MAIN STREET VERNAL, UTAH 84078

JWL + BDG Architecture

92 exchange place salt lake city, ut 84111 t 801.531.1144 f 801.355.3732 www.babcockdesign.com

sheet title:
ADA NOTES / DETAILS, SIGNAGE & FIXTURES HEIGHTS

sheet number:
A021

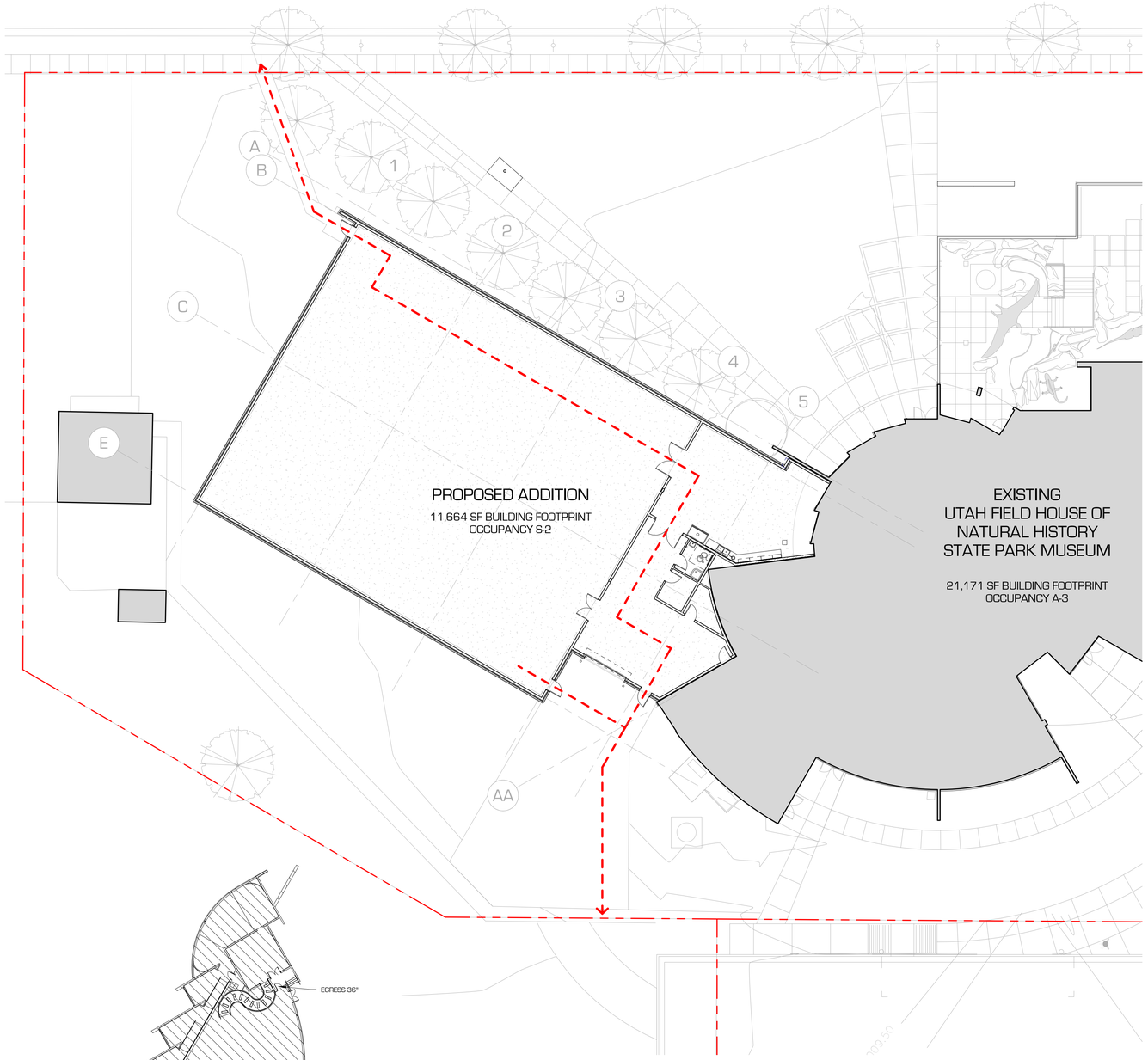

2 LEVEL 2 EGRESS DIAGRAM
1/16" = 1'-0"

NORTH

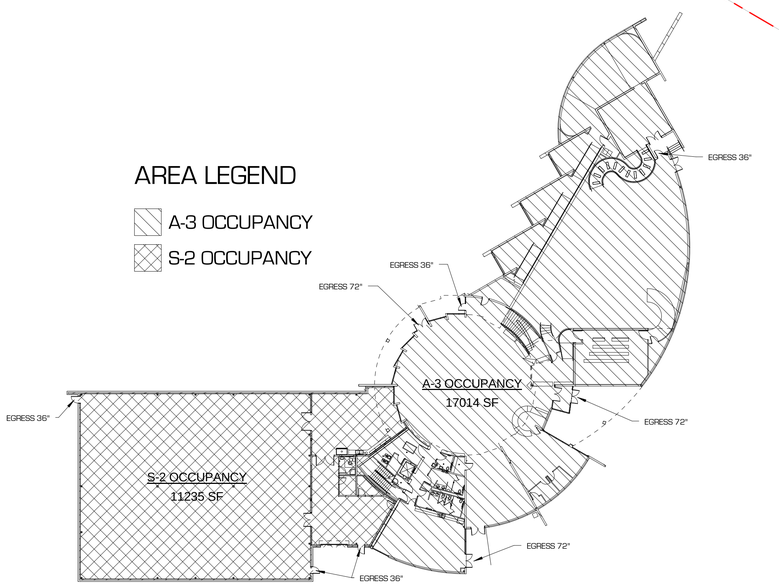

1 MAIN LEVEL
1/32" = 1'-0"

CODE ANALYSIS

PLEASE REFER TO ADDITIONAL CODE ANALYSIS ON THE COVER PAGE FOR ADDITIONAL INFORMATION

APPLICABLE CODES

	Year		Year
International Building Code	2009	National Electrical Code	2009
International Mechanical Code	2009	Uniform Code for Building Conservation	2009
International Fuel Gas Code	2009	ADA Accessibility Guildelines	2009
International Plumbing Code	2009		
International Fire Code	2009		
International Energy Conservation Code	2009		

A. Occupancy and Group: ORIGINAL BUILDING: GROUP A-3 NON-SEPARATED SPACES
NEW PALEONTOLOGICAL REPOSITORY: GROUP S-2

Change in Use: Yes _____ No X Mixed Occupancy: Yes X No _____
Special Use and Occupancy (e.g. High Rise, Covered Mall): N/A

B. Seismic Design Category: D Design Wind Speed: 90 mph

C. Type of Construction (circle one):

I	I	II	II	III	III	IV	V	V
A	B	A	B	A	B	HT	A	B

D. Fire Resistance Rating Requirements for the Exterior Walls based on the fire separation distance (in hours):

North: 0 South: 0 East: 0 West: 0

E. Mixed Occupancies: YES Nonseparated Uses: YES

F: Sprinklers:

Required: YES Provided: YES

Type of Sprinkler System (IBC 903.3.1) NFPA 13

G: Number of Stories: EXISTING: 2 ADDITION: 1 Building Height: EXISTING BUILDING: 36'-8" ADDITION: 24'-0"

H: Actual Area per Floor (square feet): 32,406 SF

I: Tabular Area: (table 503): 9,500 SF

J: Area Modifications:

a) $A_a = \left\{ A_t + \left[A_t \times I_f \right] + \left[A_t \times I_s \right] \right\}$ $\quad I_f = \left[F/P - 0.25 \right] W / 30$

WHERE At = 9,500 SF PER FLOOR
If = 0.7
Is = 2
= **35,150 sf**

WHERE F = 1,174 FEET
P = 1,204 FEET
W = 29
= 70.09

b) Sum of the Ratio Calculations for Mixed Occupancies:

$\frac{\text{Actual Area}}{\text{Allowable Area}} \leq 1 \quad \frac{32,406 \text{ SF}}{35,150 \text{ SF}} = 0.92$

c) Total Allowable Area for:
1) One Story: 35,150
2) Two Story: $A_a(2)$ 35,150
3) Three Story: $A_a(3)$ N/A

d) Unlimited Area Building: Yes _____ No X Code Section: N/A

K. Fire Resistance Rating Requirements for Building Elements (hours).

Element	Hours	Assembly Listing	Element	Hours	Assembly Listing
Exterior Bearing Walls	0		Floors - Ceiling Floors	0	
Interior Bearing Walls	0		Roofs - Ceiling Roofs	0	
Exterior Non-Bearing Walls	0		Exterior Doors and Windows	0	
Structural Frame	0		Shaft Enclosures	0	
Partitions - Permanent	0		Fire Walls	0	
Fire Barriers	0		Fire Partitions	0	
			Smoke Partitions		

L. Design Occupant Load: 33 FOR PALEONTOLOGICAL ADDITION ONLY
Exit Width Required: 6.6 FEET Exit Width Provided: 9 FEET

M. Minimum Number of Required Plumbing Facilities: FOR PALEONTOLOGICAL ADDITION ONLY
a) Water Closets - Required (m) 1 TOTAL (f) _____ Provided (m) 1 TOTAL (f) _____
b) Urinals - Required (m) 0 TOTAL (f) _____ Provided (m) 0 TOTAL (f) _____
c) Lavatories - Required (m) 1 TOTAL (f) _____ Provided (m) 1 TOTAL (f) _____
d) Bath Tubs or Showers: N/A
e) Drinking Fountains: 2 PROVIDE IN EXIST. PORTION OF BUILDING Service Sinks: 1

FOOTNOTES:

1) In case of conflict with the U.S. Department of Justice Federal Registers Parts I through V - ADA Guidelines and specific reference to the International Building Code Accessibility Chapters, the more restrictive requirement shall govern.

2) Additional Code Information shall be provided at the discretion of the Building Official for Complex Buildings. Including, but not limited to:
a) High Rise Requirements.
b) Atriums.
c) Performance Based Criteria.
d) Means or Egress Analysis.
e) Fire Assembly Locator Sheet.
f) Exterior and Interior Accessibility Route.
g) Fire Stopping, Including Tested Design Number.

revisions:

number:	description:	date:
1		
2		
3		
4		
5		
6		
7		

date: 15 FEBRUARY 2012
project number: 201103
drawn by: Author
checked by: Checker
project status: 100% DFCM REVIEW
current: as of: 2/15/2012 2:52:44 PM
file path: Z:_Projects\201103 Field House Addition\Revit\201103 Vernal Natural History Addition_Architecture.rvt

The drawings, specifications, designs, and other documents and instruments of service are considered to be the property of the Architect. The Architect retains all rights to the use of the drawings, specifications, designs, and other instruments of service, and other preparations for its services, with this notice. They are transmitted for use only for the purpose of completing the project. Any other use or reproduction without the express written consent of the Architect is prohibited. Any modifications of the contemplated projects, the plans thereof may be copied, reproduced, printed, signed, digitized, or otherwise used without the prior written consent of Babcock Design Group, Inc.
COPYRIGHT © 2009 BABCOCK DESIGN GROUP

stamp:

VERNAL FIELD HOUSE OF NATURAL HISTORY MUSEUM - ADDITION

for:

UTAH STATE PARKS AND RECREATION/UINTAH COUNTY

470 EAST MAIN STREET VERNAL, UTAH 84078

JWL + BDG Architecture
52 paluzzo place salt lake city, ut 84111 801.531.1154 | 801.595.3172
www.babcockdesign.com

sheet title:
CODE REVIEW SHEET - EGRESS & FIRE BARRIERS

sheet number:
A031

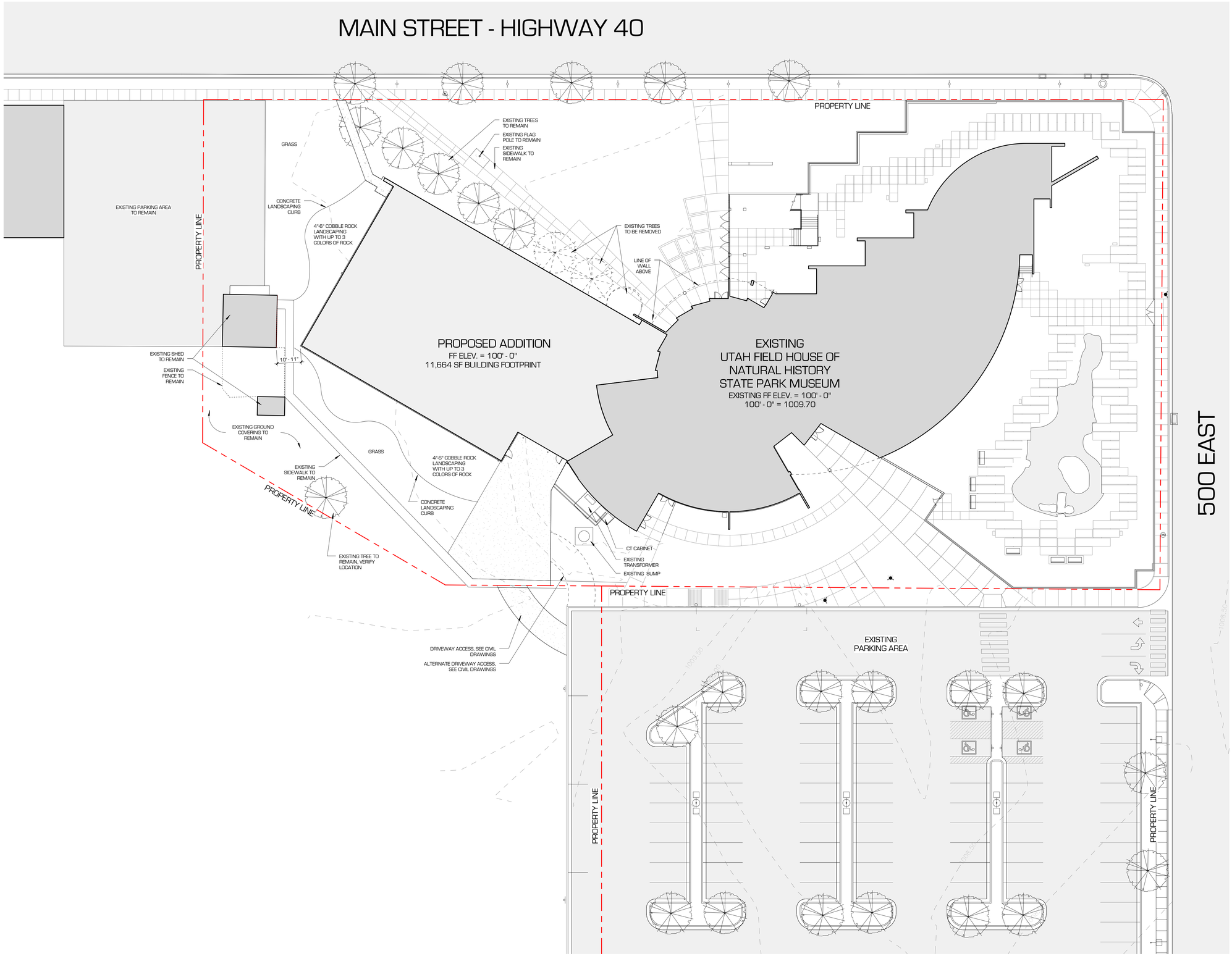

1 ARCHITECTURAL SITE PLAN
1" = 20'-0"

GENERAL NOTES

1. COORDINATE ALL SITEWORK WITH CIVIL DRAWINGS
2. COORDINATE WITH LANDSCAPE DRAWINGS.
3. CONTRACT LIMIT LINE IS FROM BACK OF CURB UNLESS NOTED OTHERWISE
5. CONNECT ALL PRIMARY ROOF DRAINS TO UNDERGROUND DISCHARGE SYSTEM; COORDINATE WITH CIVIL DRAWINGS.

NOTE:
PLEASE SEE CIVIL DRAWINGS FOR ALL INFORMATION PERTAINING TO THE SITE. INFORMATION SHOWN HERE IS FOR REFERENCE ONLY.

revisions:		
mark:	description	date
△		
△		
△		
△		
△		
△		
△		

date: 15 FEBRUARY 2012
project number: 201103
drawn by: Author
checked by: Checker
project status: 100% DFCM REVIEW

current: as of 2/15/2012 2:42:48 PM
original drawing is 24" x 36"
file path: Z:\Revit Projects\2011 Field House\201103 Vernal Natural History Addition_Architecture.rvt

The drawings, specifications, designs, and other instruments of service are considered to be the property of JWL + BDG Architecture. The drawings, specifications, designs, and other instruments of service are furnished for use in connection with this notice. They are transmitted for use only for the purpose of obtaining approvals and permits. Reproduction or other use of the drawings, specifications, designs, and other instruments of service for purposes other than those authorized by JWL + BDG Architecture is forbidden. No part of this copyrighted project, in any form or by any means, electronic or mechanical, including photocopying, recording, or any information storage and retrieval system, or otherwise used without the prior written consent of Babcock Design Group, Inc.

COPYRIGHT © 2009 BABCOCK DESIGN GROUP

stamp:

VERNAL FIELD HOUSE OF NATURAL HISTORY MUSEUM - ADDITION

for:

UTAH STATE PARKS AND RECREATION/UINTAH COUNTY

470 EAST MAIN STREET VERNAL, UTAH 84078

JWL + BDG Architecture
95 exchange place salt lake city, ut 84111 t 801 531 1146 f 801 363 3132 www.babcockdesign.com

sheet title: ARCHITECTURAL SITE PLAN

sheet number: A101

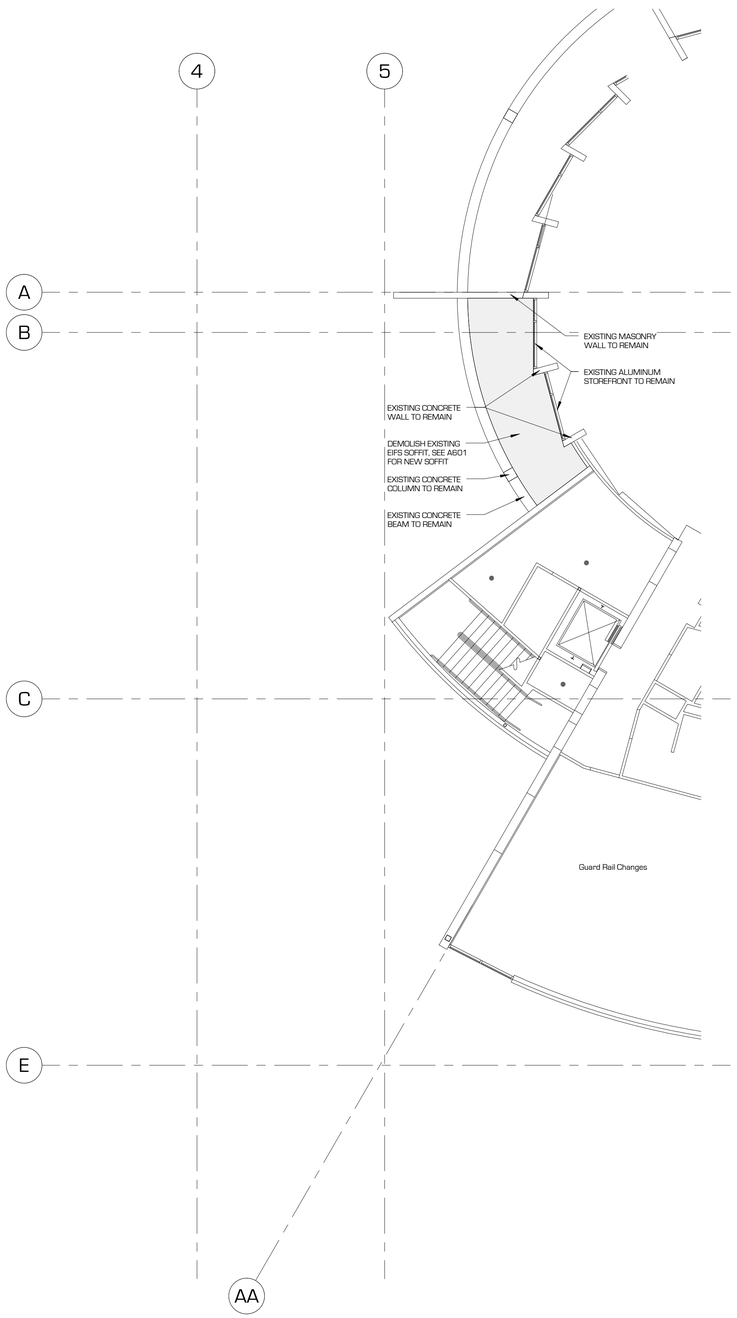

2 MAIN LEVEL - DEMOLISION PLAN
1/8" = 1'-0"

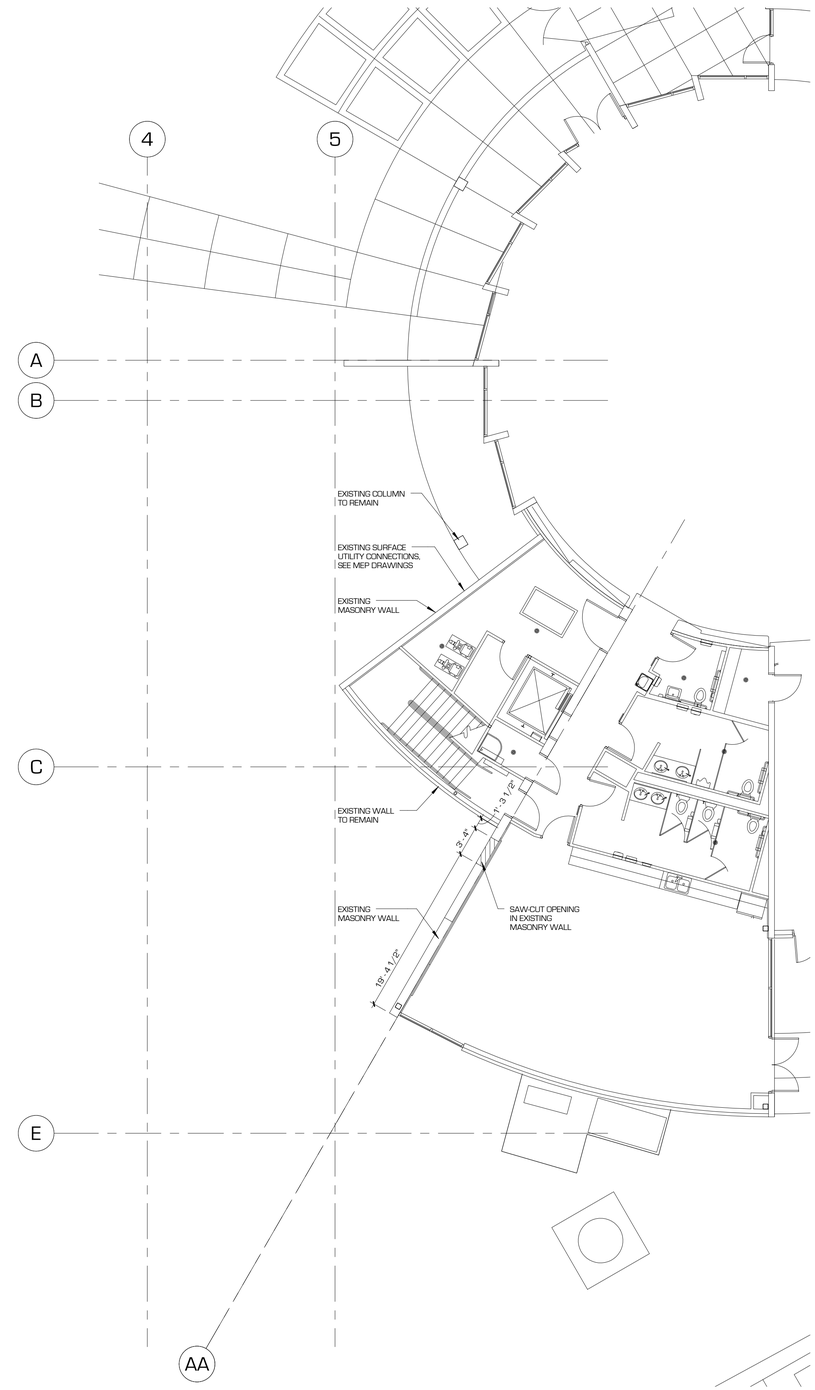

1 MAIN LEVEL - DEMOLISION PLAN
1/8" = 1'-0"

revisions:

num	description	date
1		
2		
3		
4		
5		
6		

date: 15 FEBRUARY 2012
project number: 201103
drawn by: Author
checked by: Checker
project status: 100% DFCM REVIEW

current: as of 2/15/2012 2:42:51 PM
original drawing is 24" x 36"
file path: C:\Users\Author\Desktop\Revit Models\201103 Vernal Natural History Addition_Architecture_central_01_BDG_R13_201103 Vernal Natural

The drawings, specifications, designs and ideas contained herein are considered to be the property of the Architect and may not be used in whole or in part without the express written consent of the Architect. Drawings and specifications are instruments of service, and shall be returned to the Architect upon request. The drawings and specifications may not be reproduced, circulated or disclosed to third parties without the express written consent of the Architect. Any unauthorized reproduction or use of the drawings and specifications, in whole or in part, is prohibited. Any reproduction of the contents of this document, in whole or in part, without written consent of the Architect, may be prosecuted to the fullest extent of the law. Any reproduction of the contents of this document, in whole or in part, without written consent of Babcock Design Group, Inc. digital form, or otherwise used without the prior written consent of Babcock Design Group, Inc.

COPYRIGHT © 2009 BABCOCK DESIGN GROUP

stamp:

VERNAL FIELD HOUSE OF NATURAL HISTORY MUSEUM - ADDITION

for:

UTAH STATE PARKS AND RECREATION/ UINTAH COUNTY

470 EAST MAIN STREET VERNAL, UTAH 84078

JWL + BDG Architecture

5 8 exchange place salt lake city, ut 84111 t. 801.531.1144 f. 801.363.3132 www.babcockdesign.com

sheet title:
MAIN LEVEL DEMOLISH PLAN

sheet number:
A201

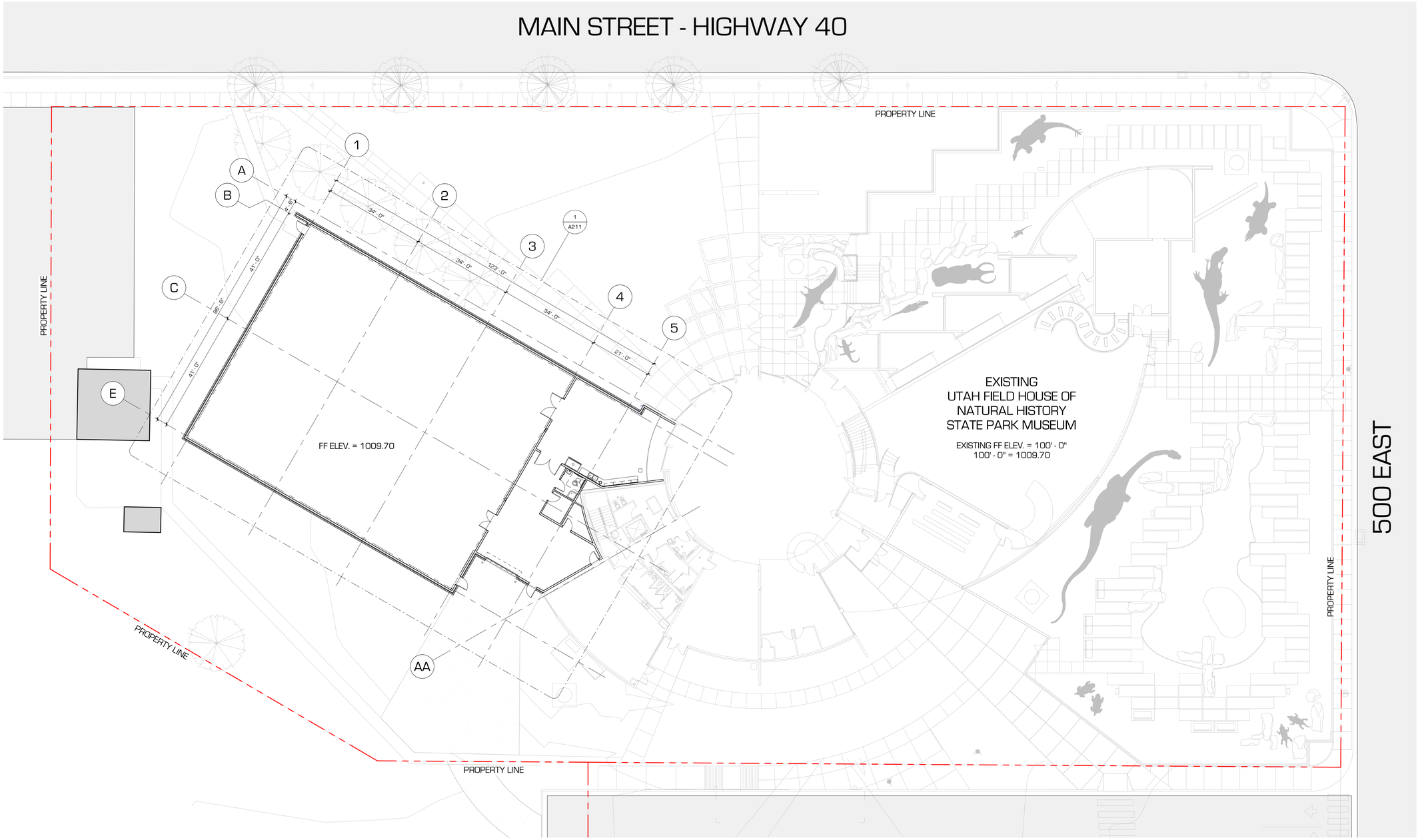

1 OVERALL FLOOR PLAN
1/16" = 1'-0"

revisions:

num	description	date
1		
2		
3		
4		
5		
6		

date: 15 FEBRUARY 2012
project number: 201103
drawn by: Author
checked by: Checker
project status: 100% DFCM REVIEW

current as of 2/15/2012 2:43:07 PM
original drawing is 24" x 36"
file path: C:\Users\Jeff\Desktop\Jeff Hardy - Revit Models\201103 Vernal Natural History Addition_Architecture_v2013_JeffJeff_201103 Vernal Natural

The drawings, specifications, designs, and other documents and instruments prepared by JWL + BDG Architecture are protected by law as the exclusive property of JWL + BDG Architecture. Any use of these documents and instruments for any purpose other than the specific project for which they were prepared is prohibited without the express written consent of JWL + BDG Architecture. Any use of these documents and instruments on any other project is prohibited. Any use of these documents and instruments without the express written consent of JWL + BDG Architecture is prohibited. Any reproduction of the contents of these documents and instruments, in whole or in part, without the express written consent of JWL + BDG Architecture is prohibited. Any transmittal of these documents and instruments in electronic or digital form, or otherwise used without the prior written consent of Babcock Design Group, Inc.

COPYRIGHT © 2009 BABCOCK DESIGN GROUP

stamp:

VERNAL FIELD HOUSE OF NATURAL HISTORY MUSEUM - ADDITION

for:

UTAH STATE PARKS AND RECREATION/ UINTAH COUNTY

470 EAST MAIN STREET VERNAL, UTAH 84078

JWL + BDG Architecture

92 excelsior place salt lake city, ut 84111 t: 801 531 1146 f: 801 363 3132 www.babcockdesign.com

sheet title: OVERALL FLOOR PLAN

sheet number: A210

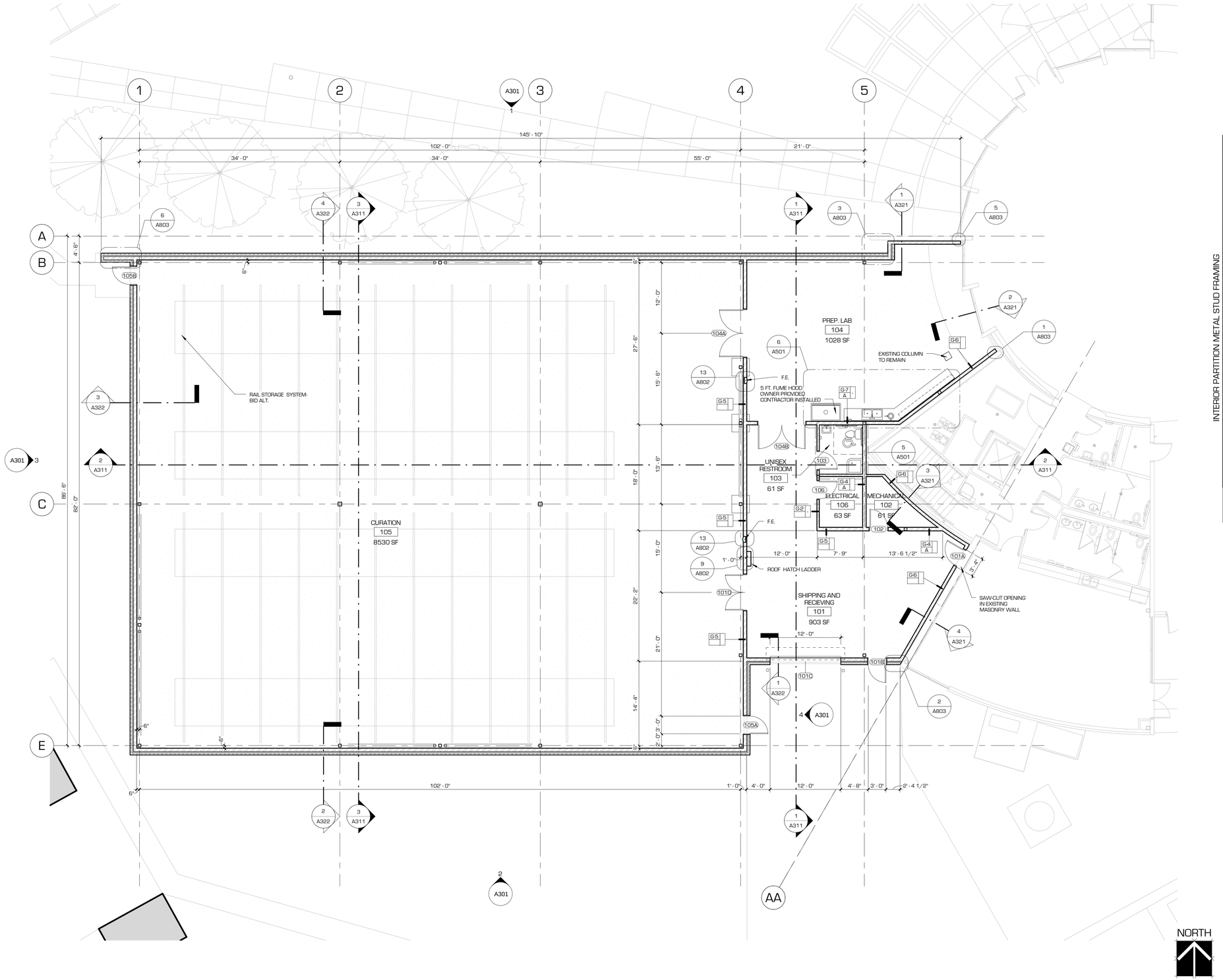

1 MAIN LEVEL
1/8" = 1'-0"

GENERAL NOTES:

1. DRAWINGS ARE NOT TO BE SCALED. DIMENSIONAL DISCREPANCIES ARE TO BE CLARIFIED WITH THE ARCHITECT BEFORE PROCEEDING WITH CONSTRUCTION

2. CONTRACTOR SHALL NOTIFY THE ARCHITECT OF DISCREPANCIES IN THE DOCUMENTS, AND OF ANY FIELD CONDITIONS THAT DEVIATE FROM THE DOCUMENTS.

3. THE ARCHITECT'S APPROVAL MUST BE OBTAINED FOR ANY DEVIATIONS FROM THE CONSTRUCTION DOCUMENTS, INCLUDING BUT NOT LIMITED TO CHANGES IN DIMENSIONS, DESIGN, MATERIALS, PRODUCTS, AND FINISHES. IN NO CASE MAY THE CONTRACTOR MAKE THESE CHANGES WITHOUT THE APPROVAL OF THE ARCHITECT.

4. SHOP DRAWINGS AND OTHER SUBMITTALS ARE TO BE PRESENTED TO THE ARCHITECT FOR REVIEW PRIOR TO EXECUTION OF WORK. ALLOW APPROPRIATE TIME FOR REVIEW.

5. SEE DOOR AND WINDOW SCHEDULES FOR SIZES, TYPES, AND FINISHES.

6. ALL CONSTRUCTION SHALL CONFORM TO AND STRICTLY COMPLY WITH ALL APPLICABLE CODES, COVENANTS, RESTRICTIONS, AND OTHER REQUIREMENTS OF THE AUTHORITY HAVING JURISDICTION OVER THE PROJECT.

7. IN NO EVENT SHALL THE CONTRACTOR SUBMIT A STANDARD CONSTRUCTION DETAIL FOR A DETAIL SPECIFIED IN THESE DOCUMENTS WITHOUT THE APPROVAL IN WRITING FROM THE ARCHITECT. THE CONTRACTOR SHALL BRING ALL WORK INTO CONFORMITY WITH THE CONSTRUCTION DOCUMENTS, AS THE ARCHITECT ORDERS, BEFORE APPROVAL OF THAT PORTION OF THE PROJECT WILL BE GRANTED.

WALL TYPE SCHEDULE/LEGEND

WALL TYPE — G-1 / A — 1

FIRE RATING
1 INDICATES 1 HR
2 INDICATES 2 HR
3 INDICATES 3 HR

ACOUSTIC
NON-ACOUSTIC

NOTES:
ACOUSTIC WALLS:

'A' INDICATES ACOUSTIC WALLS. ALL ACOUSTIC WALLS EXTEND TO DECK. PROVIDE SOUND BATT. INSULATION AT ALL ACOUSTIC WALLS.

NOTES:
RATED WALLS:
EXTEND ALL RATED WALLS TO DECK AND PROVIDE PROPER FIRE-CAULKING AND SEALANT PER UL ASSEMBLY.
EXTEND ALL SECURITY WALLS TO DECK. SEAL AND CAULK.

INTERIOR PARTITION METAL STUD FRAMING

		LEGEND	DESCRIPTION	RATING & UL#
G	1		3-5/8" 18 GA. MTL STUD @ 16" O.C. WITH SOUND BATT. [2] LAYER 5/8" GYP. BOTH SIDES. 4-7/8" TOTAL THICKNESS	
	2		3-5/8" 18 GA. MTL STUD @ 16" O.C. [2] LAYER 5/8" GYP. BOTH SIDES. 4-7/8" TOTAL THICKNESS	
	3		3-5/8" 18 GA. MTL STUD @ 16" O.C. WITH SOUND BATT. [1] LAYER 5/8" DENS GLASS BACKER WITH TILE & 5/8" GYP. OPP. SIDE. 5-3/8" TOTAL THK.	
	4		6" 18 GA. MTL STUD @ 16" O.C. WITH SOUND BATT. [1] LAYER 5/8" GYP. BOTH SIDES. 7-1/4" TOTAL THICKNESS	
	5		6" 18 GA. MTL STUD @ 16" O.C. [1] LAYER 5/8" GYP. BOTH SIDES. 7-1/4" TOTAL THICKNESS	
	6		6" 18 GA. MTL STUD @ 16" O.C. WITH SOUND BATT.5/8" GYP. 6-5/8" TOTAL THK.	
	7		6" 18 GA. MTL STUD @ 16" O.C. WITH SOUND BATT. [1] LAYER 5/8" DENS GLASS BACKER WITH TILE & 5/8" GYP. OPP. SIDE. 7-7/8" TOTAL THK.	
	8		6" 18 GA. MTL STUD @ 16" O.C. WITH SOUND BATT. [1] LAYER 5/8" DENS GLASS BACKER WITH TILE 7-1/4" TOTAL THK.	

BID ALTERNATE #1:

PROVIDE PRICING FOR ADDING FLOOR RAILS FOR A FUTURE HI-DENSITY STORAGE SYSTEM. THE PRELIMINARY LAYOUT SHALL INCLUDE MATERIALS AND INSTALLATION COST OF THE RAIL LAYOUT AS SHOWN ON THIS SHEET AND 8 INCH THICKEN SLAB PER STRUCTURAL. SEE SPECIFICATIONS AND DETAIL 10/A801 FOR BASIS OF DESIGN OF EMBEDDED RAILS AND OTHER INFORMATION.

revisions:

num	description	date

date: 15 FEBRUARY 2012
project number: 201103
drawn by: Author
checked by: Checker
project status: 100% DFCW REVIEW
current as of: 2/15/2012 2:43:05 PM
original drawing is 24" x 36"
file path: T:\Projects\VERNAL FIELD HOUSE OF NATURAL HISTORY MUSEUM - ADDITION\Architecture\201103_Vernal Natural History Museum - Addition_Architecture.rvt

The drawings, specifications, designs and other documents are considered to be the property of the Architect and are protected by copyright. They are not to be used for other projects, or for extensions of this project by others without the Architect's written consent, and other personnel only to work on this project. They are transmitted for use only for the purpose of obtaining bids or performing the work on this project. Reproduction or modification of the contained projects, in any form or by any method, or delivery of any copy of the drawings or other documents to other than those to whom this has been issued, is prohibited without the written consent of the Architect. Any reproduction of drawings or other documents, in digital form, or otherwise used without the prior written consent of Babcock Design Group, Inc.
COPYRIGHT © 2009 BABCOCK DESIGN GROUP

stamp:

VERNAL FIELD HOUSE OF NATURAL HISTORY MUSEUM - ADDITION

for:

UTAH STATE PARKS AND RECREATION/UINTAH COUNTY

470 EAST MAIN STREET VERNAL, UTAH 84078

JWL + BDG Architecture
59 exchange place salt lake city, ut 84111 t 801.531.1146 f 801.363.3132
www.babcockdesign.com

sheet title:
MAIN LEVEL FLOOR PLAN

sheet number:
A211

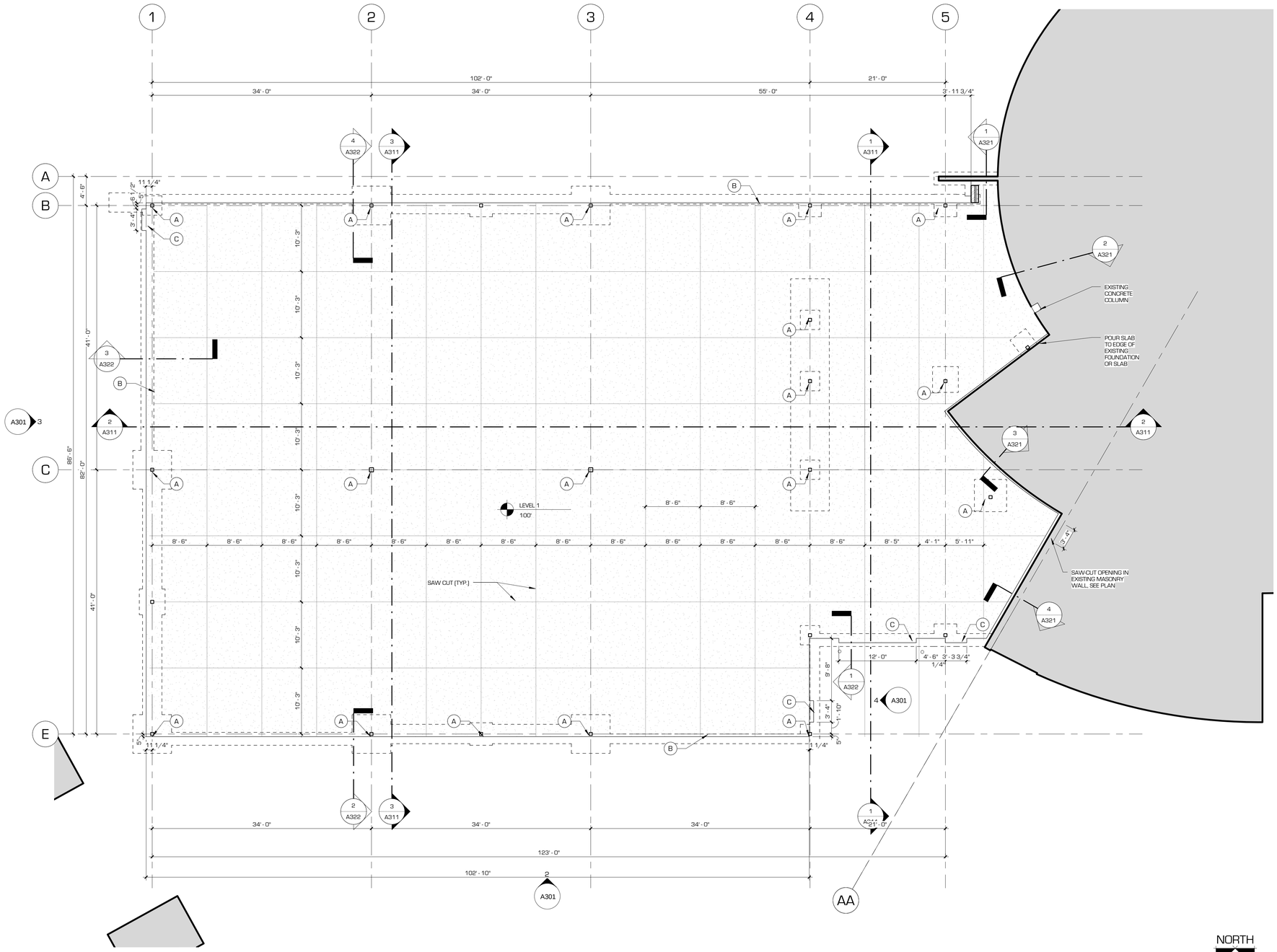

1 MAIN LEVEL SLAB PLAN
1/8" = 1'-0"

KEY NOTES

A. STEEL COLUMN, SEE STRUCTURAL

B. 8" CONCRETE SLAB OVER COMPACTED BASE COORDINATE EARTHWORK WITH CIVIL, STRUCTURAL AND GEOTECHNICAL ENGINEERS SPECIFICATIONS.

C. RECESS FOUNDATION WALL 8" BELOW F.F.E. TO ALLOW FOR CONCRETE SLAB TO COVER FOUNDATION WALL AT DOORWAY/ STOREFRONT. SEE DETAIL

revisions: num	description	date

date: 15 FEBRUARY 2012
project number: 201103
drawn by: Author
checked by: Checker
project status: 100% DFCM REVIEW

current: as of 2/15/2012 2:43:07 PM
original drawing is 24" x 36"
file path: Z:\2011\201103 - Field House Addition_Architecture\201103 Vernal Natural

The drawings, specifications, designs and ideas contained herein are considered to be the exclusive property of BABCOCK DESIGN GROUP. They are not to be used in whole or in part for any purpose other than in connection with this notice. They are transmitted for use only for reviews, and other purposes which are expressly agreed to by BABCOCK DESIGN GROUP. Any reproduction or any modifications of the contained projects, if approved by BABCOCK DESIGN GROUP, must be reproduced, printed or digitized in its entirety and must include the BABCOCK DESIGN GROUP copyright notice and digital form, or otherwise used without the prior written consent of Babcock Design Group, Inc.

COPYRIGHT © 2009 BABCOCK DESIGN GROUP

stamp:

VERNAL FIELD HOUSE OF NATURAL HISTORY MUSEUM - ADDITION

for:

UTAH STATE PARKS AND RECREATION/ UINTAH COUNTY

470 EAST MAIN STREET VERNAL, UTAH 84078

JWL + BDG Architecture

59 exchange place suite 1000 salt lake city, ut 84111 t 801.531.1144 f 801.363.3132 www.babcockdesign.com

sheet title: MAIN LEVEL SLAB PLAN

sheet number: A211s

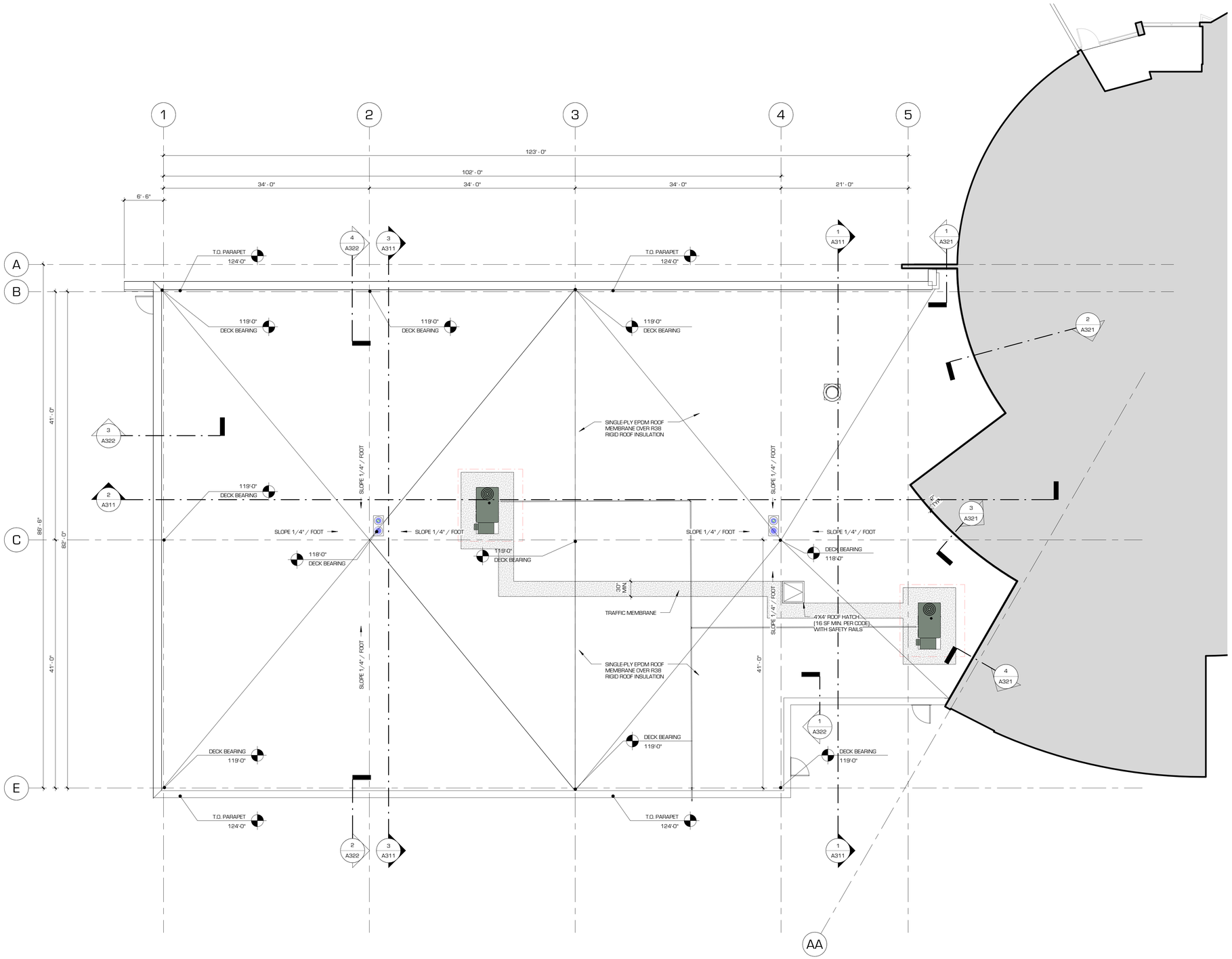

1 ROOF PLAN
1/8" = 1'-0"

LEGEND:

ROOF DRAIN
PRIMARY
SECONDARY

TAPERED RIGID INSULATION
SLOPE 1/4" FT. MIN OVER (2) LAYERS OF 2" RIGID INSULATION.

TRAFFIC MEMBRANE

revisions:		
num.	description	date

date: 15 FEBRUARY 2012
project number: 201103
drawn by: Author
checked by: Checker
project status: 100% DFCM REVIEW

current: as of: 2/15/2012 2:43:03 PM
original drawing is 24" x 36"
file path: C:\Users\jeff\Desktop\201103_VERNAL FIELD HOUSE - Addition_Architecture_v2_2012-02-15_R13.rvt

The drawings, specifications, designs and designs contained herein are considered to be the property of JWL + BDG Architecture and may not be used for any purpose other than as shown on these drawings and specifications, and other personnel only in connection with this notice. They are transmitted for use only for construction of the project shown herein and are not to be used for any other purpose or project, or reproduced or copied in any form or manner, without the prior written consent of JWL + BDG Architecture. Any reproduction of this copyrighted project, in any form of media, by copied, reproduced, printed, digital, or otherwise, or otherwise used without the prior written consent of Babcock Design Group, Inc.

COPYRIGHT © 2009 BABCOCK DESIGN GROUP

stamp:

VERNAL FIELD HOUSE OF NATURAL HISTORY MUSEUM - ADDITION

for:

UTAH STATE PARKS AND RECREATION/ UINTAH COUNTY

470 EAST MAIN STREET VERNAL, UTAH 84078

JWL + BDG Architecture

55 exchange place salt lake city, ut 84111 t 801.531.1144 f 801.363.3132 www.babcockdesign.com

sheet title: ROOF PLAN

sheet number: A212

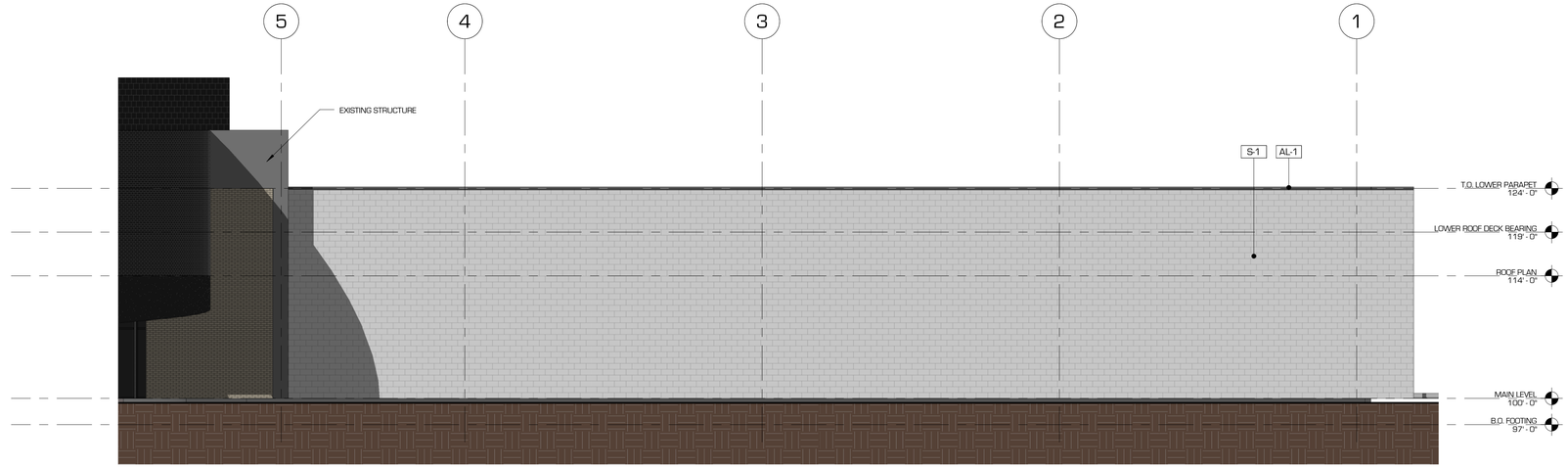

1 NORTH ELEVATION - ADDITION
1/8" = 1'-0"

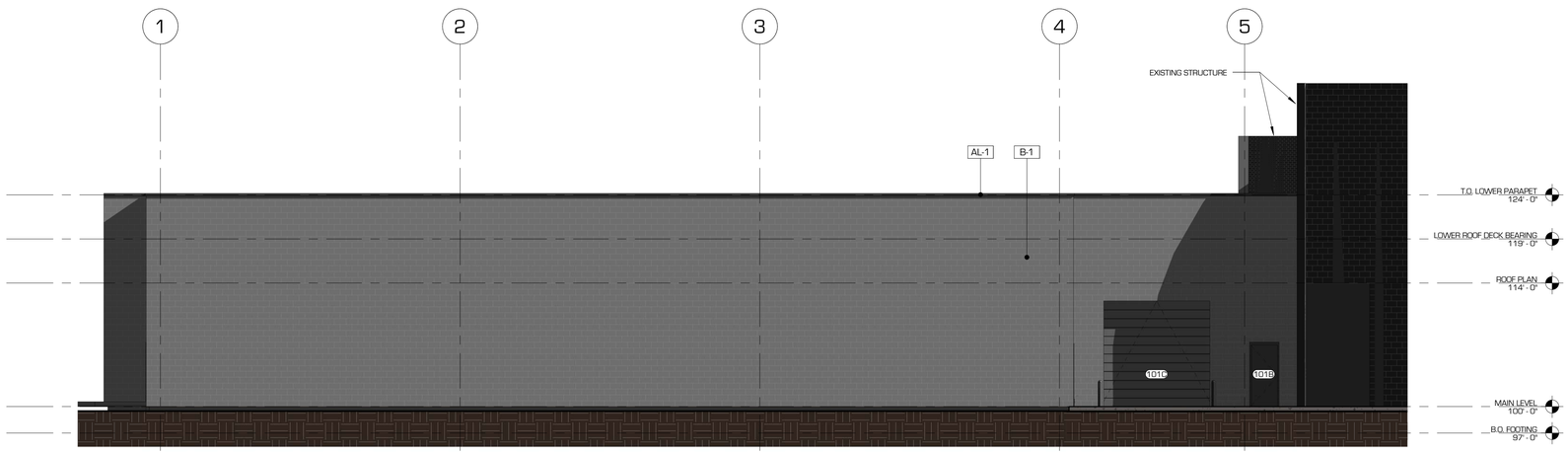

2 SOUTH ELEVATION - ADDITION
1/8" = 1'-0"

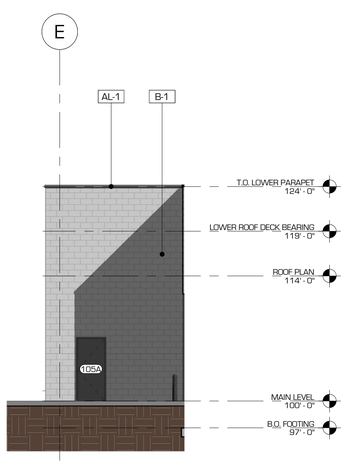

4 EAST ELEVATION - ADDITION
1/8" = 1'-0"

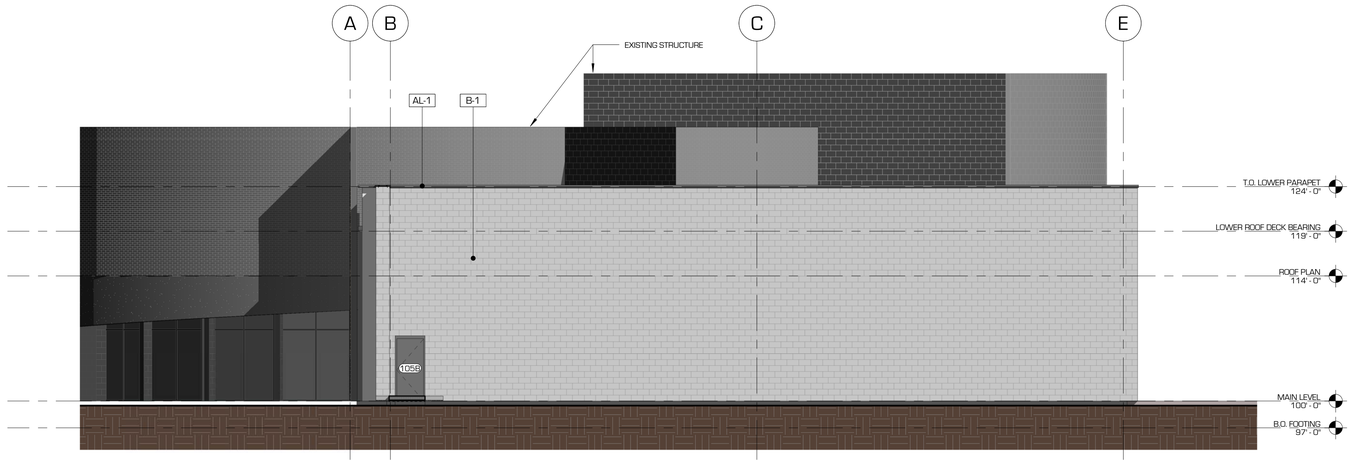

3 WEST ELEVATION - ADDITION
1/8" = 1'-0"

GENERAL NOTES

1. CONTRACTOR TO LEAVE A 1/2" GAP BETWEEN ALL DISSIMILAR MATERIALS, TYP. TO BE FILLED WITH BACKER ROD AND CAULKING, COLOR TO BE DETERMINED.

2. CONTRACTOR TO PAINT ALL VENT PIPES, EXHAUST FANS, EQUIPMENT AND ALL OTHER ROOF PENETRATIONS VISIBLE FROM THE BUILDING'S STREET FRONTAGE.

EXTERIOR FINISHES/MATERIALS

B-1	4" BRICK VENEER SYSTEM. COLOR AS SELECTED
AL-1	PRE-FINISHED ALUMINUM FLASHING/COPING/FASCIA. SEE DETAILS AS REFERENCED ON WALL SECTIONS. COLOR AS SELECTED FROM MFG. ENTIRE RANGE OF COLORS.
C-1	EXPOSED CONCRETE FOUNDATION. PLASTER COATED, TYP.
S-1	4"CMU VENEER SYSTEM. COLOR AS SELECTED

revisions: mark	description	date

date: 15 FEBRUARY 2012
project number: 201103
drawn by: Author
checked by: Checker
project status: 100% DFCM REVIEW
current: as of: 2/15/2012 2:43:33 PM
original drawing size: 24" x 36" landscape
file path: C:\Users\Author\Desktop\Revit Models\201103 Vernal Natural History Museum - Addition_Architecture.rvt

The drawings, specifications, designs and other documents and instruments of service are considered to be the property of JWL + BDG Architecture and are protected by copyright. They are intended for use only for the project for which they are prepared and for no other purpose. They are not to be loaned, copied or given to others without the written consent of JWL + BDG Architecture. Any reproduction of these documents in whole or in part, or any modification of the contained projects, is prohibited without the written consent of JWL + BDG Architecture. Any unauthorized use of these documents is at the user's own risk and JWL + BDG Architecture assumes no responsibility for any damages arising from such use. Any reproduction of these documents in digital form, or otherwise used without the prior written consent of Babcock Design Group, Inc.

COPYRIGHT © 2009 BABCOCK DESIGN GROUP

JWL + BDG Architecture

stamp:

VERNAL FIELD HOUSE OF NATURAL HISTORY MUSEUM - ADDITION

for:

UTAH STATE PARKS AND RECREATION/UINTAH COUNTY

470 EAST MAIN STREET VERNAL, UTAH 84078

52 exchange place salt lake city, ut 84111 t 801.363.1144 f 801.363.3132 www.babcockdesign.com

sheet title: EXTERIOR BUILDING ELEVATIONS

sheet number: A301

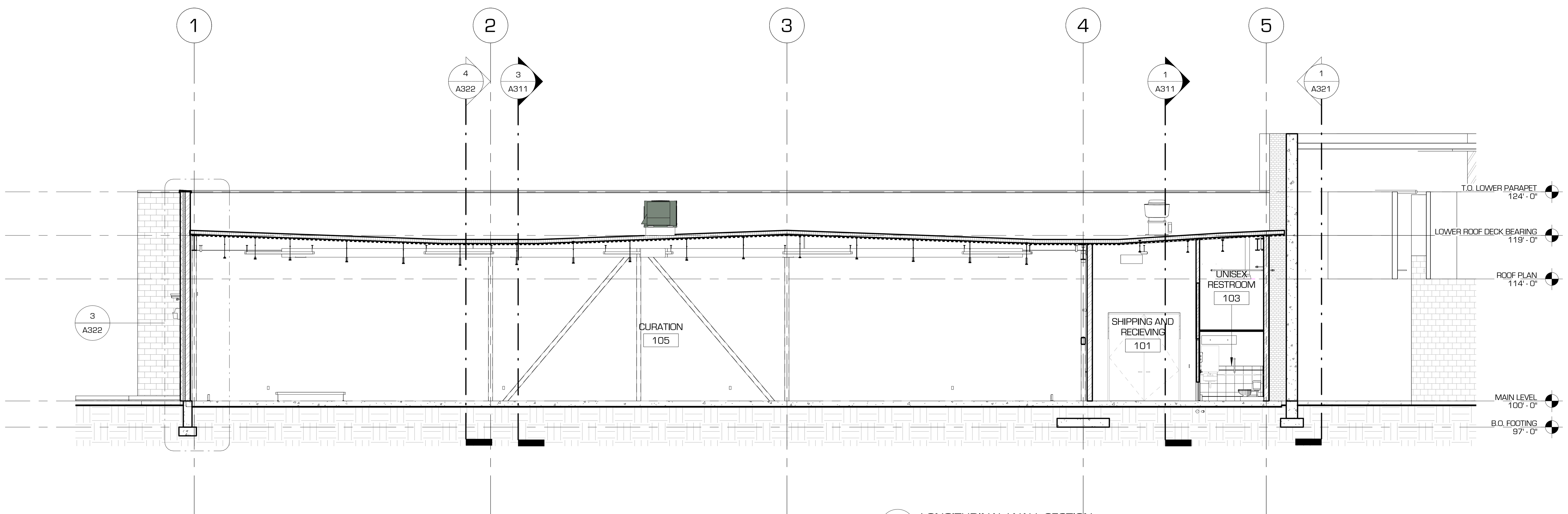

2 LONGITUDINAL WALL SECTION
1/8" = 1'-0"

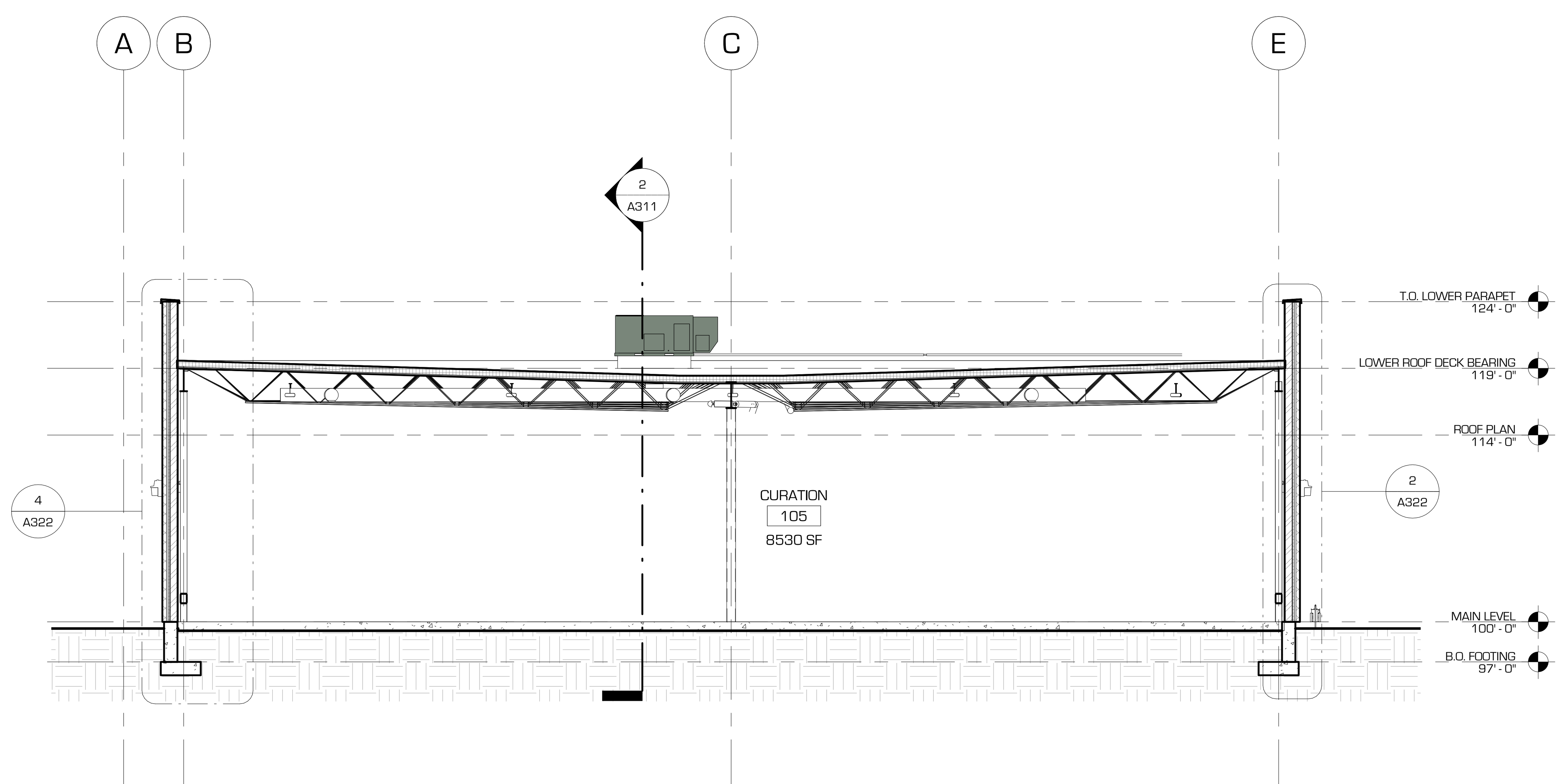

3 WALL SECTION THRU CURATION SPACE
1/8" = 1'-0"

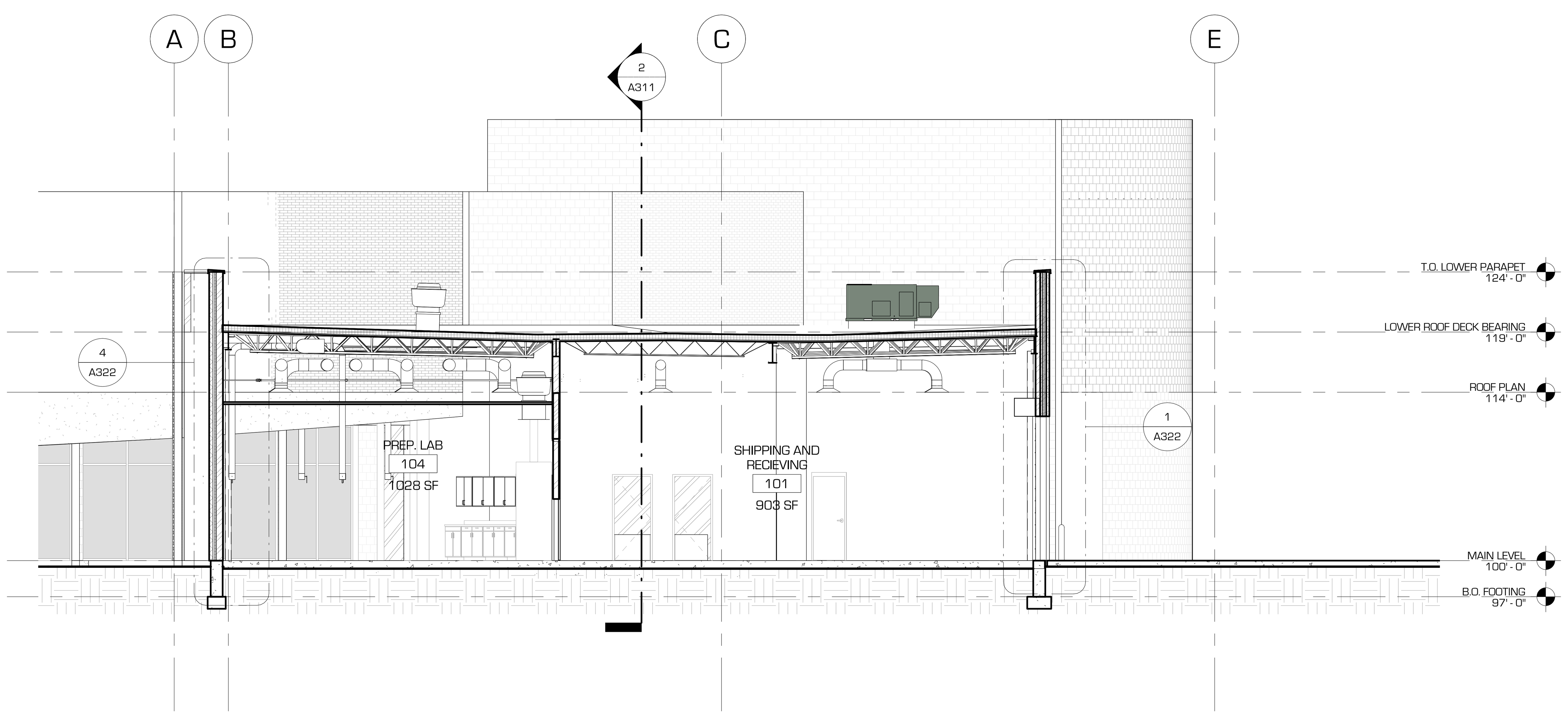

1 WALL SECTION THRU LAB SPACE
1/8" = 1'-0"

revisions:

num.	description	date
△		
△		
△		
△		
△		
△		
△		

date: 15 FEBRUARY 2012
project number: 201103
drawn by: Author
checked by: Checker
project status: 100% DFCM REVIEW

current as of: 2/15/2012 2:43:24 PM original drawing is 24" x 36"
file path: T:\BabcockDesign\Vernal Field House Addition\Architectural\2012-02-13\201103 Vernal Natural History Museum Addition.rvt

The drawings, specifications, designs, and images represented herein are considered by law the architect's instruments of service and are the property of Babcock Design Group, Inc. They are available for limited review and evaluation by clients, consultants, contractors, government agencies, vendors, and office personnel only in accordance with this notice. They are intended for use only for the project specified and are to be used for no other purpose or project including additions to or modification of the completed project. No part thereof may be copied, reproduced, photographed, modified, published, uploaded, transmitted, disclosed, sold, distributed to others in any way including in digital form, or otherwise used without the prior written consent of Babcock Design Group, Inc.
COPYRIGHT © 2009 BABCOCK DESIGN GROUP

stamp:

VERNAL FIELD HOUSE OF NATURAL HISTORY MUSEUM - ADDITION

for:

UTAH STATE PARKS AND RECREATION/ UINTAH COUNTY

470 EAST MAIN STREET VERNAL, UTAH 84078

JWL + BDG Architecture

52 exchange place salt lake city, ut 84111 t: 801 531 1144 f: 801 363 3132 www.babcockdesign.com

sheet title:
BUILDING SECTIONS

sheet number:
A311

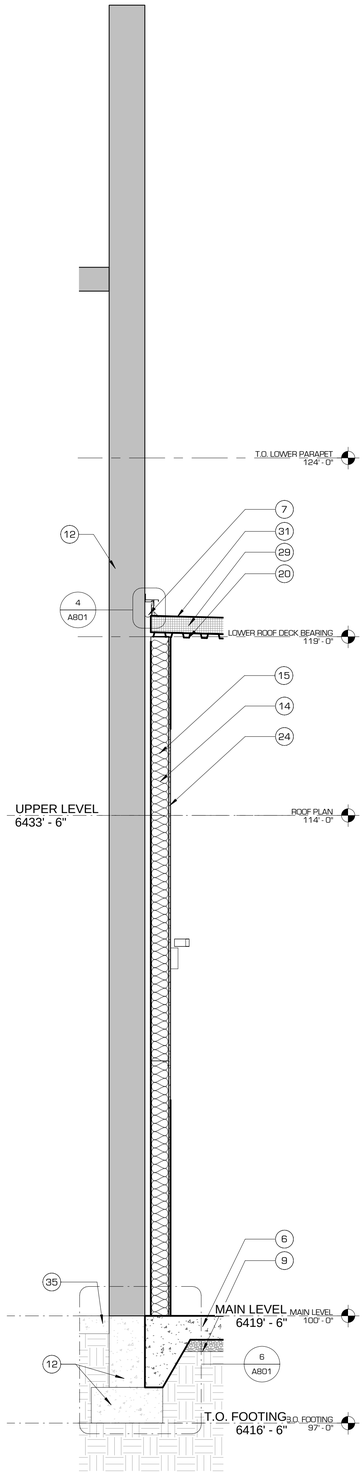

4 WALL SECTION THRU EXISITNG MASONRY WALL
1/2" = 1'-0"

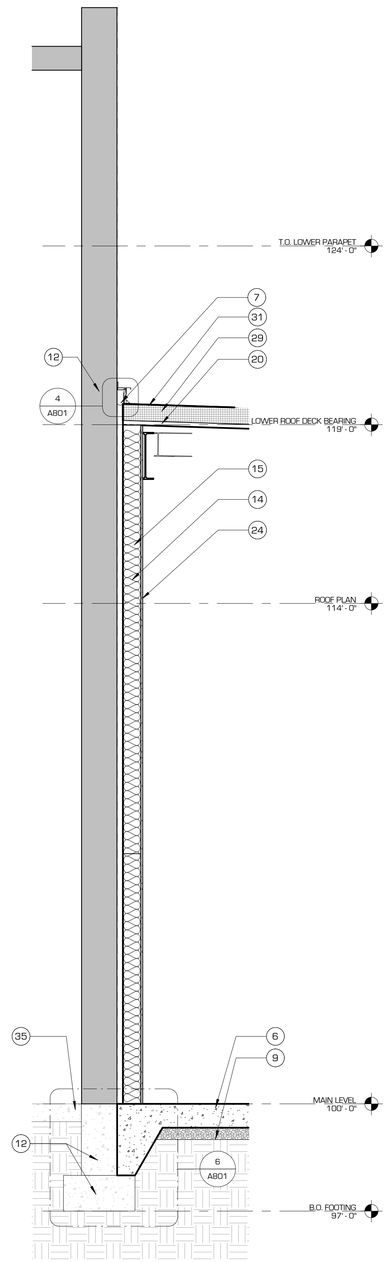

3 WALL SECTION THRU EXISTING STAIRCASE
1/2" = 1'-0"

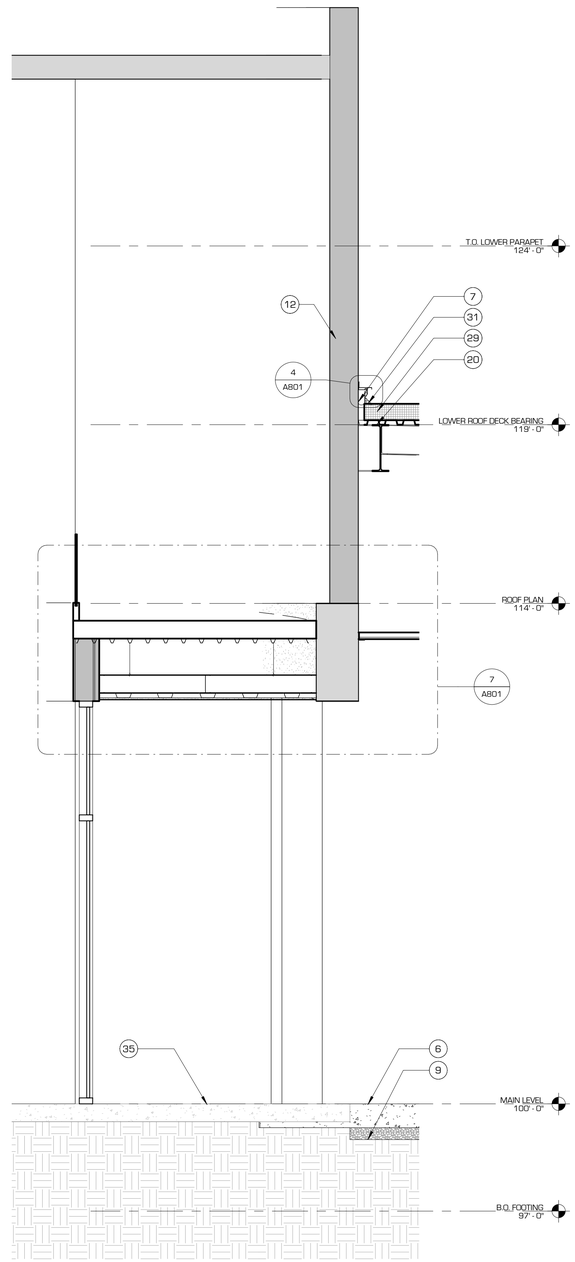

2 WALL SECTION THRU EXISTING MAIN LOBBY
1/2" = 1'-0"

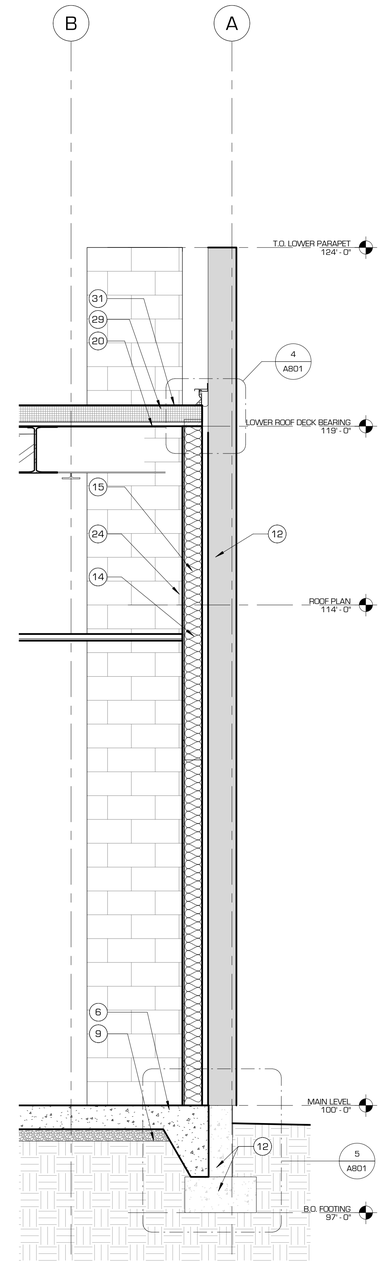

1 WALL SECTION THRU PREP LAB
1/2" = 1'-0"

WALL SECTION KEYED NOTES

1. PROPERLY PREPARED SUB-GRADE OR ENGINEERED FILL. SEE CIVIL DRAWINGS AND SOILS REPORT
2. FINISHED GRADE (SLOPE AWAY FROM BLDG.). SEE CIVIL
3. EXTR. CONC. SLAB (SLOPE AWAY FROM BLDG). SEE CIVIL
4. REINFORCED CONCRETE FOOTING & FOUNDATION - SEE STRUCTURAL
5. MOISTURE BARRIER OVER R 7.5 CONTINUOUS RIGID INSULATION
6. 8" CONCRETE SLAB ON 4" GRAVEL BASE AND VAPOR BARRIER
7. EXPANSION JOINT COVER - PER DETAILS
8. CONCRETE CONTROL JOINT. SEE DETAIL
9. VAPOR BARRIER BELOW SLAB ON GRADE
10. PREFINISHED METAL FLASHING W/ DRIP EDGE
11. 8" x 16" x 4" CMU VENEER SYSTEM TO MATCH EXISTING BUILDING
12. EXISTING WALL, HEIGHT V.I.F.
13. EXTERIOR SHEATHING
14. R-13 BATT WALL INSULATION
15. 6" METAL STUDS @ 16" O.C. SEE WALL TYPES
16. 3 5/8" METAL STUDS @ 16" O.C. SEE WALL TYPES
17. MOISTURE BARRIER OVER EXTERIOR GYPSUM BOARD SHEATHING
18. APPLIED WATERPROOF MEMBRANE OVER EXTERIOR SHEATHING. SEE SPECIFICATIONS
22. R-15 FOUNDATION INSULATION
20. METAL ROOF DECK, SEE STRUCTURAL
21. STEEL COLUMN - SEE STRUCTURAL
22. STEEL BEAM - SEE STRUCTURAL
23. JOIST - SEE STRUCTURAL
24. 5/8" GYPSUM BOARD (PAINTED).
25. DOOR AND FRAME. SEE DOOR SCHEDULE
26. STEEL ANGLE LEDGER
27. CONTINUOUS BACKER ROD AND SEALANT
28. CEILING AS SCHEDULED. SEE REFLECTED CEILING PLAN
29. R-38 RIGID ROOF INSULATION
30. TAPERED RIGID INSULATION SYSTEM. SLOPE 1/4" / FOOT MIN. UNLESS NOTED OTHERWISE.
31. SINGLE-PLY ROOF MEMBRANE. RUN CONTINUOUS UP AND OVER TOP OF PARAPET UNDER CAP FLASHING.
32. ROOF DRAINS. CONNECT TO SITE DRAINAGE SYSTEM - SEE MECHANICAL / PLUMBING & CIVIL DRAWINGS.
33. CANT STRIP
34. OVERHEAD ROLLING DOOR - SEE DOOR SCHEDULE
35. EXISTING SLAB
36. 2" RIGID INSULATION
37. EXTERIOR GYPSUM BOARD SHEATHING
38. PREFINISH METAL CAP FLASHING W/ CONTINUOUS HOLD DOWN CLIPS AT BOTH SIDES ON SLOPE FIRE RESISTANT NAILER. SLOPE 1/4" PER FT. TOWARDS ROOF. FLASHING TO HAVE INTERLOCKING STANDING SEAM JOINTS - NO LAP JOINTS
39. VAPOR BARRIER
40. 1" AIR SPACE
41. BRICK VENEER TO MATCH EXISTING BUILDING

revisions: num	description	date

date: 15 FEBRUARY 2012
project number: 201103
drawn by: Author
checked by: Checker
project status: 100% DFCM REVIEW
current: as of 2/15/2012 2:43:38 PM
original drawing is 24" x 36"
file path: J:\201103 - Vernal Field House of Natural History Museum - Addition_Architecture\A321 WALL SECTIONS.rvt

The drawings, specifications, designs, and other documents and instruments of service are considered to be the property of JWL + BDG Architecture. The reproduction, alteration, or use of these documents and instruments of service, in whole or in part, without the written consent of JWL + BDG Architecture is prohibited. Any modifications made to these documents and instruments of service by other parties are not the responsibility of JWL + BDG Architecture. They are transmitted for use only for the purpose of completing the project. Any transmittal of these documents and instruments of service in electronic form or any other form, including but not limited to paper, reproduced paper, reproduced drawings, digital form, or otherwise used without the prior written consent of Babcock Design Group, Inc.
COPYRIGHT © 2009 BABCOCK DESIGN GROUP

stamp:

VERNAL FIELD HOUSE OF NATURAL HISTORY MUSEUM - ADDITION

for:

UTAH STATE PARKS AND RECREATION/UINTAH COUNTY

470 EAST MAIN STREET VERNAL, UTAH 84078

JWL + BDG Architecture
5c exchange place salt lake city, ut 84111 t. 801.531.1146 f. 801.363.3132 www.babcockdesign.com

sheet title: WALL SECTIONS

sheet number: A321

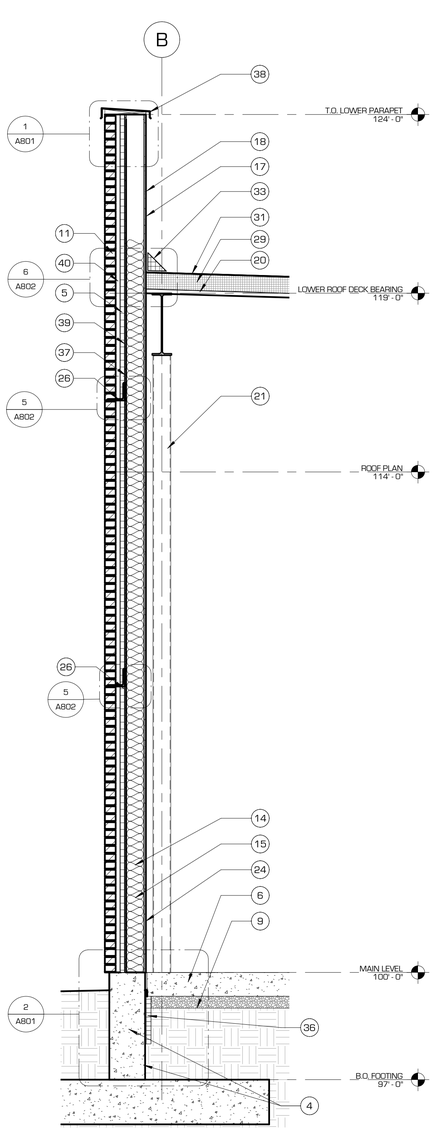

4 WALL SECTION THRU CURATION - NORTH
1/2" = 1'-0"

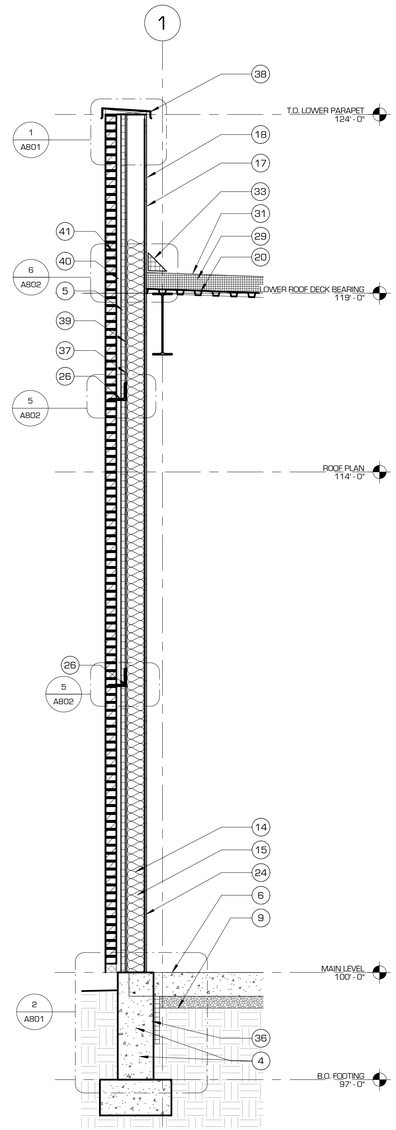

3 WALL SECTION THRU CURATION - WEST
1/2" = 1'-0"

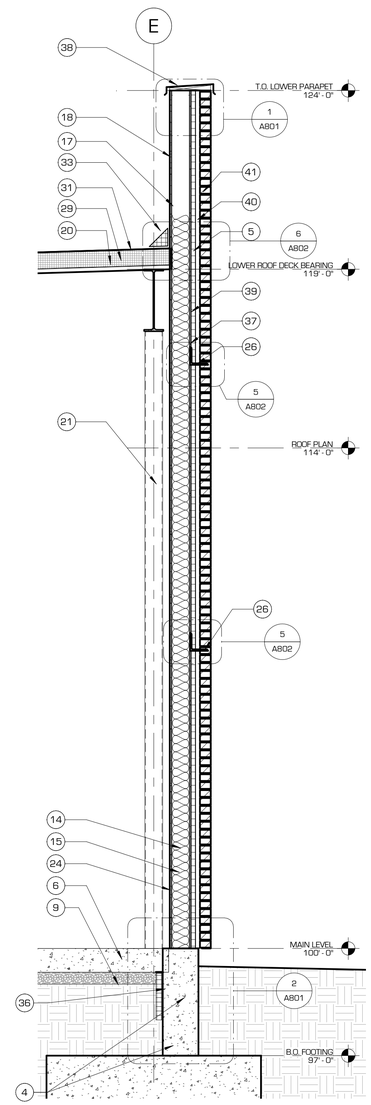

2 WALL SECTION THRU CURATION - SOUTH
1/2" = 1'-0"

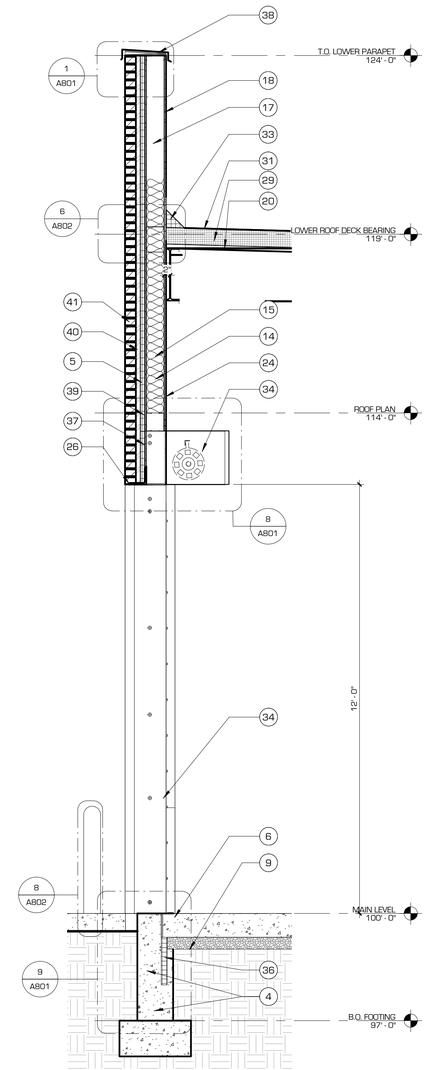

1 WALL SECTION THRU SHIPPING DOOR
1/2" = 1'-0"

WALL SECTION KEYED NOTES

1. PROPERLY PREPARED SUB-GRADE OR ENGINEERED FILL. SEE CIVIL DRAWINGS AND SOILS REPORT
2. FINISHED GRADE (SLOPE AWAY FROM BLDG.). SEE CIVIL
3. EXTR. CONC. SLAB (SLOPE AWAY FROM BLDG). SEE CIVIL
4. REINFORCED CONCRETE FOOTING & FOUNDATION - SEE STRUCTURAL
5. MOISTURE BARRIER OVER R 7.5 CONTINUOUS RIGID INSULATION
6. 8" CONCRETE SLAB ON 4" GRAVEL BASE AND VAPOR BARRIER
7. EXPANSION JOINT COVER - PER DETAILS
8. CONCRETE CONTROL JOINT. SEE DETAIL
9. VAPOR BARRIER BELOW SLAB ON GRADE
10. PREFINISHED METAL FLASHING W/ DRIP EDGE
11. 8" x 16" x 4" CMU VENEER SYSTEM TO MATCH EXISTING BUILDING
12. EXISTING WALL, HEIGHT V.I.F.
13. EXTERIOR SHEATHING
14. R-13 BATT WALL INSULATION
15. 6" METAL STUDS @ 16" O.C. SEE WALL TYPES
16. 3 5/8" METAL STUDS @ 16" O.C. SEE WALL TYPES
17. MOISTURE BARRIER OVER EXTERIOR GYPSUM BOARD SHEATHING
18. APPLIED WATERPROOF MEMBRANE OVER EXTERIOR SHEATHING. SEE SPECIFICATIONS
22. R-15 FOUNDATION INSULATION
20. METAL ROOF DECK, SEE STRUCTURAL
21. STEEL COLUMN - SEE STRUCTURAL
22. STEEL BEAM - SEE STRUCTURAL
23. JOIST - SEE STRUCTURAL
24. 5/8" GYPSUM BOARD (PAINTED).
25. DOOR AND FRAME. SEE DOOR SCHEDULE
26. STEEL ANGLE LEDGER
27. CONTINUOUS BACKER ROD AND SEALANT
28. CEILING AS SCHEDULED. SEE REFLECTED CEILING PLAN
29. R-38 RIGID ROOF INSULATION
30. TAPERED RIGID INSULATION SYSTEM. SLOPE 1/4" / FOOT MIN. UNLESS NOTED OTHERWISE.
31. SINGLE-PLY ROOF MEMBRANE. RUN CONTINUOUS UP AND OVER TOP OF PARAPET UNDER CAP FLASHING.
32. ROOF DRAINS, CONNECT TO SITE DRAINAGE SYSTEM - SEE MECHANICAL/PLUMBING & CIVIL DRAWINGS.
33. CANT STRIP
34. OVERHEAD ROLLING DOOR - SEE DOOR SCHEDULE
35. EXISTING SLAB
36. 2" RIGID INSULATION
37. EXTERIOR GYPSUM BOARD SHEATHING
38. PREFINISH METAL CAP FLASHING W/ CONTINUOUS HOLD DOWN CLIPS AT BOTH SIDES ON SLOPE FIRE RESISTANT NAILER. SLOPE 1/4" PER FT. TOWARDS ROOF. FLASHING TO HAVE INTERLOCKING STANDING SEAM JOINTS - NO LAP JOINTS
39. VAPOR BARRIER
40. 1" AIR SPACE
41. BRICK VENEER TO MATCH EXISTING BUILDING

revisions:

num	description	date

date: 15 FEBRUARY 2012
project number: 201103
drawn by: Author
checked by: Checker
project status: 100% DFCW REVIEW

current: as of 2/15/2012 2:43:31 PM
original drawing is 24" x 36" (in part): 201103_VERNAL Field House of Natural History Museum Addition_Architecture.dwg (R15.0&S13) 201103 Vernal Natural

The drawings, specifications, designs, and other documents and instruments of service are considered to be the property of the Babcock Design Group, Inc. (BDG) and are protected by copyright. These documents are to be used only for the specified project and may not be used for other projects or purposes without the written consent of BDG. These documents are not to be loaned, copied, or reproduced in any form or by any means, electronic or mechanical, including photocopying, recording, or any information storage and retrieval system, without the written consent of BDG. Any modifications of the contained projects, if approved by the client, shall be clearly marked as preliminary and shall be signed and sealed by the responsible design professional. Any reproduction of these documents, in whole or in part, or any modification of the contained projects, without the written consent of BDG, shall be at the client's and user's sole risk and without liability or legal exposure to the client and user. Any reproduction of these documents, in digital form, or otherwise used without the prior written consent of Babcock Design Group, Inc.
COPYRIGHT © 2009 BABCOCK DESIGN GROUP

JWL + BDG Architecture

stamp:

VERNAL FIELD HOUSE OF NATURAL HISTORY MUSEUM - ADDITION
for:
UTAH STATE PARKS AND RECREATION/UINTAH COUNTY
470 EAST MAIN STREET VERNAL, UTAH 84078

$9c exchange place salt lake city, ut 84111 t 801.531.1146 f 801.363.3132 www.babcockdesign.com

sheet title:
WALL SECTIONS

sheet number:
A322

DOOR TYPES - GRAPHIC SCHEDULE

SCALE: 1/4" : 1'-0"

NOTE: SEE DOOR SCHEDULE AND DOOR TAGS TO MATCH APPROPRIATE FRAME TYPE WITH DOOR TYPES

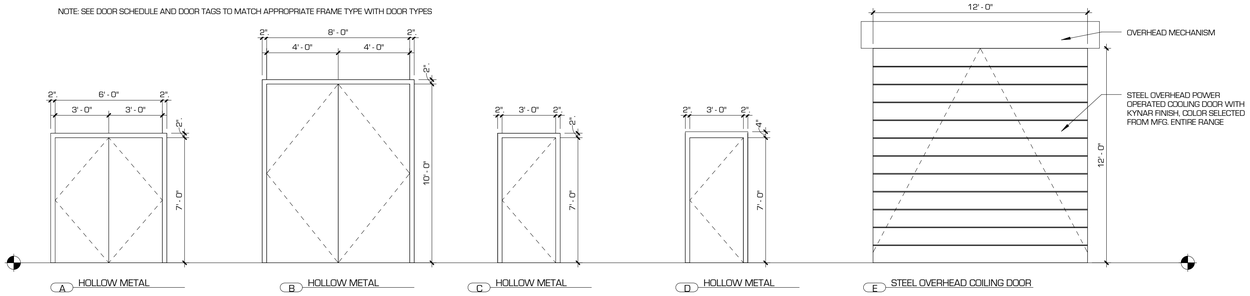

DOOR TYPES
1/4" = 1'-0"

WALL TYPE SCHEDULE/LEGEND

NOTES:
ACOUSTIC WALLS:

NOTES:
RATED WALLS:
EXTEND ALL RATED WALLS TO DECK AND PROVIDE PROPER FIRE-CAULKING AND SEALANT PER UL ASSEMBLY.
EXTEND ALL SECURITY WALLS TO DECK. SEAL AND CAULK.

'A' INDICATES ACOUSTIC WALLS. ALL ACOUSTIC WALLS EXTEND TO DECK. PROVIDE SOUND BATT. INSULATION AT ALL ACOUSTIC WALLS.

		LEGEND	DESCRIPTION	RATING & UL#
INTERIOR PARTITION METAL STUD FRAMING G	1		3-5/8" 18 GA. MTL STUD @ 16" O.C. WITH SOUND BATT. [2] LAYER 5/8" GYP. BOTH SIDES. 4-7/8" TOTAL THICKNESS	
	2		3-5/8" 18 GA. MTL STUD @ 16" O.C. [2] LAYER 5/8" GYP. BOTH SIDES. 4-7/8" TOTAL THICKNESS	
	3		3-5/8" 18 GA. MTL STUD @ 16" O.C. WITH SOUND BATT. [1] LAYER 5/8" DENS GLASS BACKER WITH TILE & 5/8" GYP. OPP. SIDE. 5-3/8" TOTAL THK.	
	4		6" 18 GA. MTL STUD @ 16" O.C. WITH SOUND BATT. [1] LAYER 5/8" GYP. BOTH SIDES. 7-1/4" TOTAL THICKNESS	
	5		6" 18 GA. MTL STUD @ 16" O.C. [1] LAYER 5/8" GYP. BOTH SIDES. 7-1/4" TOTAL THICKNESS	
	6		6" 18 GA. MTL STUD @ 16" O.C. WITH SOUND BATT.5/8" GYP. 6-5/8" TOTAL THK.	
	7		6" 18 GA. MTL STUD @ 16" O.C. WITH SOUND BATT. [1] LAYER 5/8" DENS GLASS BACKER WITH TILE & 5/8" GYP. OPP. SIDE. 7-7/8" TOTAL THK.	
	8		6" 18 GA. MTL STUD @ 16" O.C. WITH SOUND BATT. [1] LAYER 5/8" DENS GLASS BACKER WITH TILE 7-1/4" TOTAL THK.	

ACCESSORIES

MARK	DESCRIPTION	REMARKS
A	GRAB BARS	MATCH EXISTING MUSEUM BRAND/STYLE
B	TOILET PAPER DISPENSER	STAINLESS STEEL
C	MIRROR	24"x36" WITH 1/2" METAL FRAME
D	EYE WASH STATION	
E	JANITOR SINK	
F	PAPER TOWEL DISPENSER	STAINLESS STEEL
G	SINK	
H	TOILET	WALL MOUNTED
J	SOLID SURFACE COUNTER-TOP	SEE FINISH SCHEDULE
K	FUME HOOD	PROVIDED BY OWNER. CONTRACTOR INSTALLED.

SEE SPECIFICATIONS FOR BASIS OF DESIGN AND DESCRIPTIONS
SEE SHEET A020 FOR MOUNTING HEIGHTS

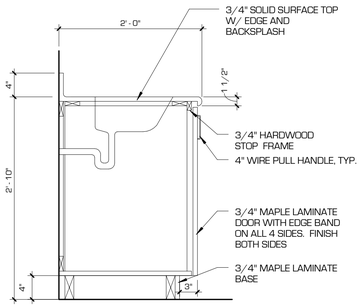

10 SINK W/ BASE CABINET
1" = 1'-0"

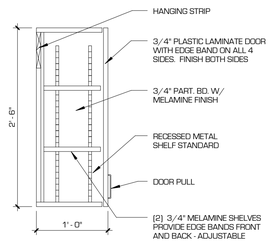

9 UPPER CABINET
1" = 1'-0"

DOOR SCHEDULE

DOOR #	DOOR TYPE	ROOM #	ROOM NAME	FIRE RATING	COMMENTS
101A	D	101	SHIPPING AND RECEIVING		
101B	D	101	SHIPPING AND RECEIVING		
101C	E	101	SHIPPING AND RECEIVING		
101D	A	101	SHIPPING AND RECEIVING		
102	C	101	SHIPPING AND RECEIVING		
103	C	103	UNISEX RESTROOM		
104A	B	105	CURATION		
104B	B	101	SHIPPING AND RECEIVING		
105A	C	105	CURATION		
105B	D	105	CURATION		
106	C	101	SHIPPING AND RECEIVING		

INTERIOR FINISH LEGEND / SCHEDULE

FLOOR PLAN TAG

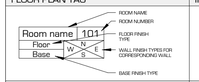

INTERIOR ELEVATION TAG

WALLS		
MARK	MATERIAL	DESCRIPTION / COMMENTS
P1	PAINTED GYP. BOARD. SEE WALL TYPES	KWALL HOWELLS COLOR T.B.D.
P2	PAINTED GYP. BOARD. SEE WALL TYPES	KWALL HOWELLS COLOR T.B.D.
TL	WALL TILE	T.B.D.
BASE		
MARK	MATERIAL	DESCRIPTION / COMMENTS
RB	RUBBER BASE	4" RUBBER BASE
TB	TILE BASE	T.B.D.
FLOOR		
MARK	MATERIAL	DESCRIPTION / COMMENTS
SC	CONCRETE	SEALED CONCRETE
COUNTERTOP / SURFACES		
MARK	MATERIAL	DESCRIPTION / COMMENTS
CT	SOLID SURFACE	AS SELECTED

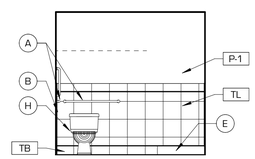

3 RESTROOM - EAST
1/4" = 1'-0"

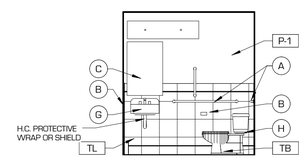

1 RESTROOM - NORTH
1/4" = 1'-0"

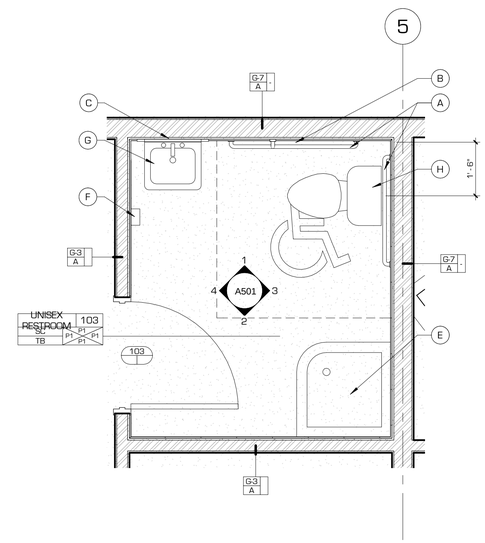

5 ENLARGE FLOOR PLAN - UNISEX BATHROOM
1/2" = 1'-0"

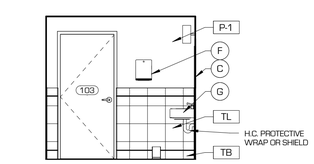

4 RESTROOM - WEST
1/4" = 1'-0"

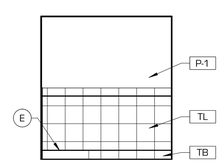

2 RESTROOM - SOUTH
1/4" = 1'-0"

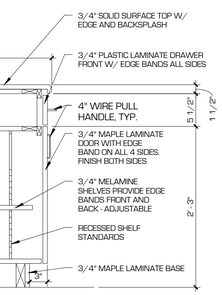

11 BASE CABINET W/ DRAWER
1" = 1'-0"

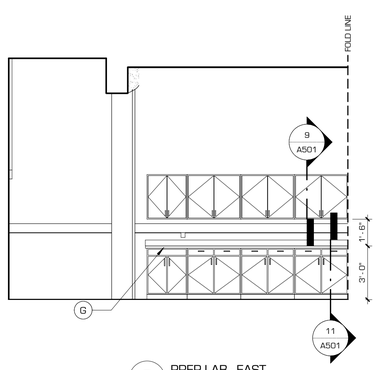

8 PREP LAB - EAST
1/4" = 1'-0"

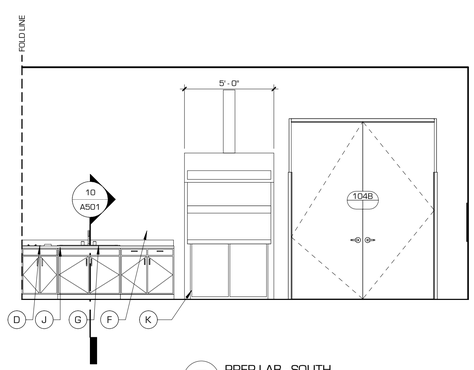

7 PREP LAB - SOUTH
1/4" = 1'-0"

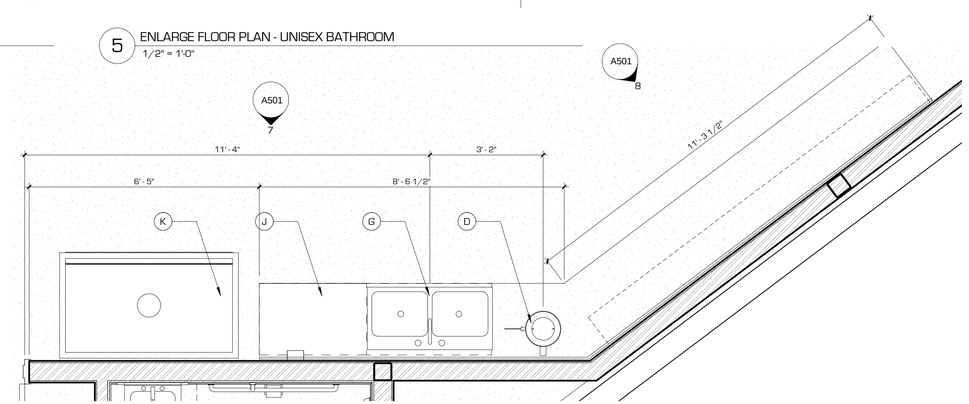

6 PREP LAB WORK STATION
1/2" = 1'-0"

revisions: mark	description	date
1		
2		
3		
4		
5		
6		
7		

date: 15 FEBRUARY 2012
project number: 201103
drawn by: Author
checked by: Checker
project status: 100% DFCM REVIEW
current: as of 2/15/2012 2:43:34 PM
original drawing is 24" x 36" (sq. yards)
Addition, Architecture\A501 - Field House History Museum

The drawings, specifications, designs, and other documents are considered to be the property of the Architect and may not be used in whole or in part without the Architect's written consent. Reproduction of these documents, designs, specifications, and other presentations by a person who was not the Architect. They are transmitted for use only for the purpose and project for which they were prepared and are not to be used for any other purpose or on any other project. Any prohibited or unauthorized reproduction, modification of the contained projects, Any prohibited or unauthorized transmission, or any reuse on other projects without written consent of the Architect is prohibited. Any alterations, or reproduction made without the prior written consent of Babcock Design Group, Inc. is illegal/tort, or otherwise used without the prior written consent of Babcock Design Group, Inc.
COPYRIGHT © 2009 BABCOCK DESIGN GROUP

stamp:

VERNAL FIELD HOUSE OF NATURAL HISTORY MUSEUM - ADDITION

for:

UTAH STATE PARKS AND RECREATION/UINTAH COUNTY

470 EAST MAIN STREET VERNAL, UTAH 84078

JWL + BDG Architecture
55 exchange place salt lake city, ut 84111 t 801 531 1146 f 801 363 3132 www.babcockdesign.com

sheet title: INTERIOR ELEVATIONS

sheet number: A501

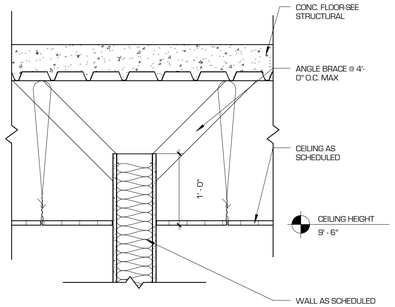

6 TYP. PARTITION
1" = 1'-0"

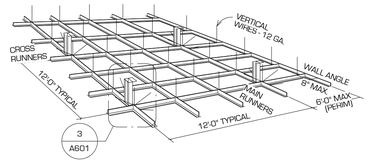

CEILING AREAS OF 144 SQ. FT. OR LESS SURROUNDED BY WALLS WHICH CONNECT DIRECTLY TO THE STRUCTURE ABOVE SHALL NOT REQUIRE THE DIAGONAL BRACING WIRES.

EACH VERTICAL WIRE SHALL BE ATTACHED EACH END WITH MIN. 3 TURNS.

CEILING GRID SHALL BE INSTALLED LEVEL TO WITHIN 1/8" IN 12 FEET.

CEILING GRID SHALL BE INSTALLED LEVEL TO WITHIN 1/8" IN 12 FEET. MEANS OF LEVELING MAIN RUNNERS.

ALL WIRE LOOPS SHALL BE TIGHTLY WRAPPED AND SHARPLY BENT.

2 CEILING GRID
1 : 1

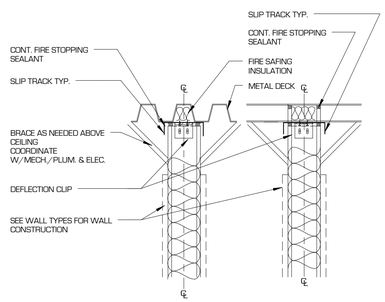

NOTE: APPLY ACOUSTIC SEALANT AT TOP OF WALL AND FIRE STOPPING SEALANT AT FIRE RATED PARTITIONS

7 WALL TERMINATION AT DECK
1 1/2" = 1'-0"

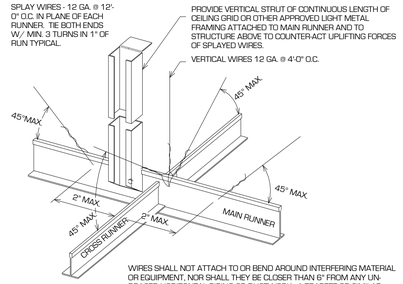

WIRES SHALL NOT ATTACH TO OR BEND AROUND INTERFERING MATERIAL OR EQUIPMENT, NOR SHALL THEY BE CLOSER THAN 6" FROM ANY UN-BRACED HORIZONTAL PIPING OR DUCTWORK. A TRAPEZE OR SIMILAR DEVICE SHALL BE USED WHERE OBSTRUCTIONS OCCUR.

ALL CEILING MOUNTED LIGHT FIXTURES SHALL BE ATTACHED TO SUSPENDED CEILING GRID. IN ADDITION 12 GA. HANGER WIRES SHALL BE ATTACHED TO THE GRID WITHIN 3" OF EACH CORNER OF THE FIXTURE. TWO ADDITIONAL WIRES SHALL BE CONNECTED TO THE LIGHT HOUSING AND TO THE STRUCTURE ABOVE (THESE WIRES MAY BE SLACK).

3 LAY-IN CEILING GRID
1 : 1

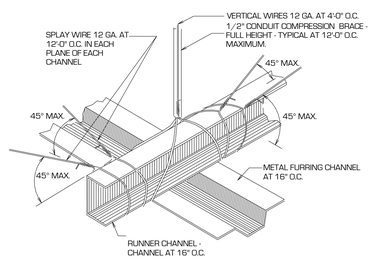

4 SUSPENDED GYP BOARD BRACING
1 : 1

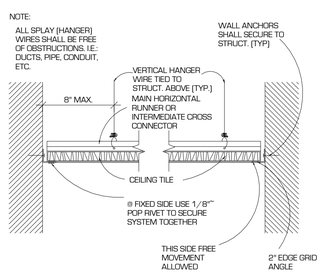

5 CEILING GRID PERIMETER
1 1/2" = 1'-0"

CEILING LEGEND

C-1		2' X 4' LAY IN ACOUSTICAL TILE
C-2		5/8" SUSPENDED GYP. BOARD TAPED, AND PAINTED
C-3		EXPOSED TO STRUCTURE

NOTE: SEE ELECTRICAL PLANS FOR LIGHTING SCHEDULE. COORDINATE ALL LIGHTING FIXTURES AND LOCATIONS WITH ELECTRICAL DRAWINGS.

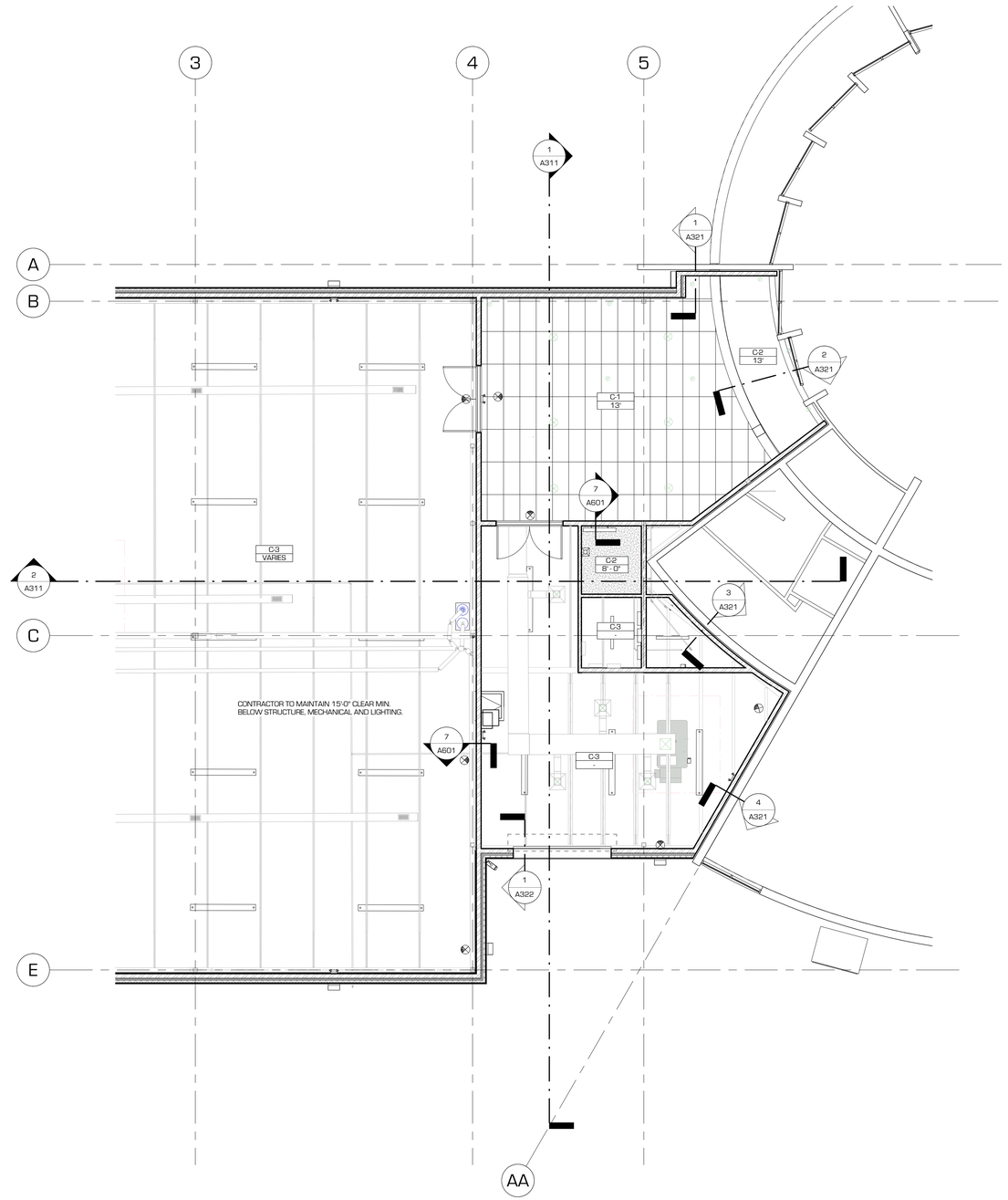

1 MAIN LEVEL
1/8" = 1'-0"

revisions:

num	description	date
1		
2		
3		
4		
5		
6		
7		

date: 15 FEBRUARY 2012
project number: 201103
drawn by: Author
checked by: Checker
project status: 100% DFCM REVIEW
current: as of: 2/15/2012 2:43:38 PM
original drawing is 24" x 36"
file path: Z:\Revit Projects\201103 Vernal Field House of Natural History Addition_Architecture_v2012_central_2012_201103 Vernal Natural

The drawings, specifications, designs and information herein are considered to be the property of JWL + BDG Architecture and may not be used in whole or in part without written consent. Reproduction of these documents, designs and information herein, in any form or medium, without express written consent of JWL + BDG Architecture is prohibited. Any unauthorized reproduction or modification of the contained projects, designs and information herein is subject to prosecution. Reproduction of these documents, designs and information herein, in any form or medium, without express written consent of JWL + BDG Architecture, or otherwise used without the prior written consent of Babcock Design Group, Inc.
COPYRIGHT © 2009 BABCOCK DESIGN GROUP

JWL + BDG Architecture

stamp:

VERNAL FIELD HOUSE OF NATURAL HISTORY MUSEUM - ADDITION
for:
UTAH STATE PARKS AND RECREATION/UINTAH COUNTY
470 EAST MAIN STREET VERNAL, UTAH 84078

2e excelsior place salt lake city, ut 84111 t: 801.531.1146 f: 801.363.3133 www.babcockdesign.com

sheet title:
REFLECTED CEILING PLAN LEVEL 1

sheet number:
A601

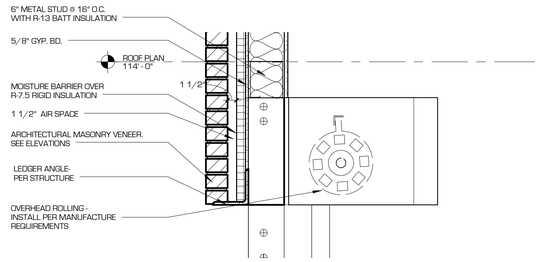

8 OVERHEAD ROOLING DOOR HEAD DETAIL
1" = 1'-0"

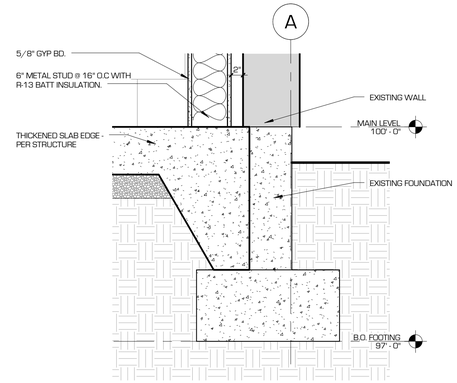

5 FOUNDATION DETAIL @ GRID A
1" = 1'-0"

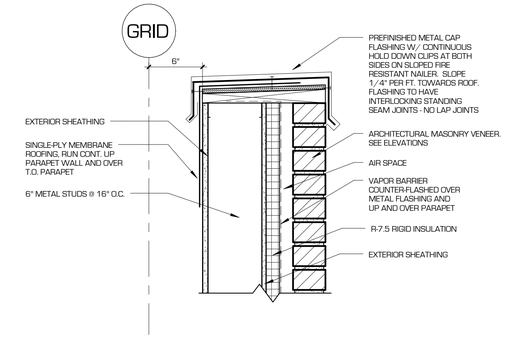

1 PARAPET DETAIL @ MASONRY VENEER
1 1/2" = 1'-0"

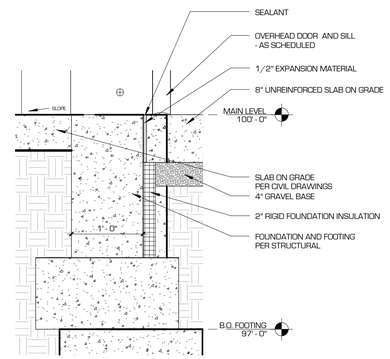

9 OVERHEAD ROOLING DOOR SILL DETAIL
1" = 1'-0"

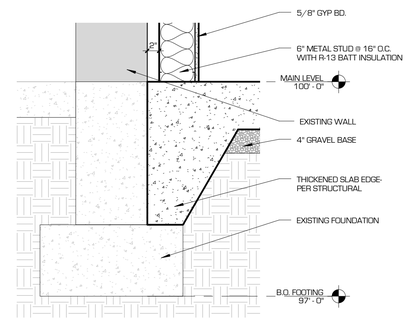

6 FOUNDATION WALL DETAIL
1" = 1'-0"

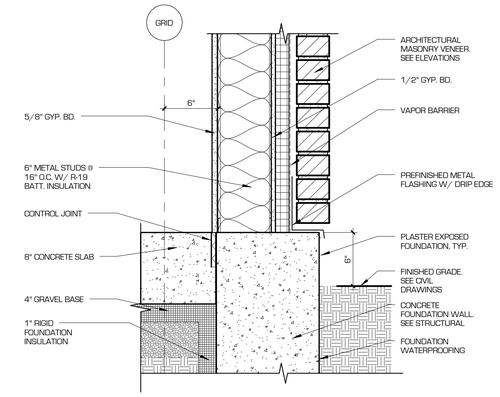

2 FOUNDATION DETAIL
1 1/2" = 1'-0"

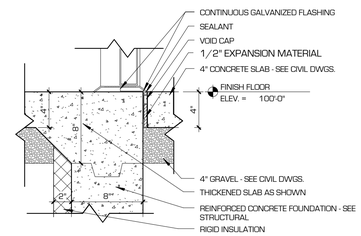

3 DOOR THRESHOLD, TYPICAL
1 1/2" = 1'-0"

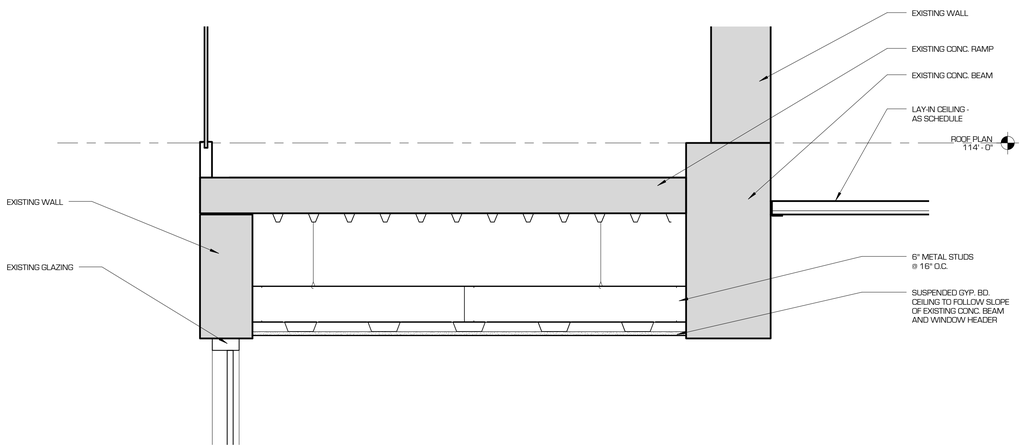

7 PRE. LAB CEILING DETAIL
1" = 1'-0"

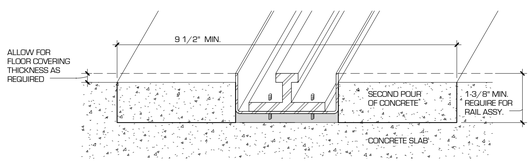

10 L-RAIL DETAIL
6" = 1'-0"

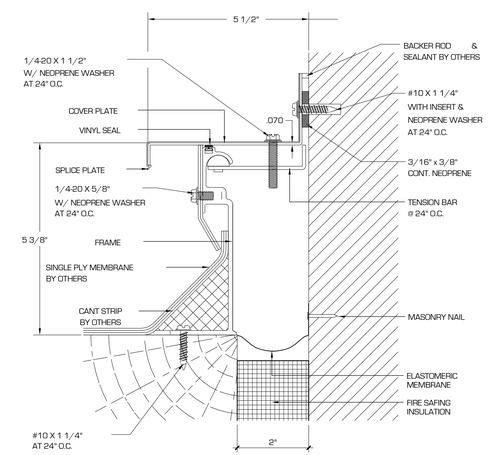

4 SEISMIC EXPANSION EXTERIOR JOINT DETAIL
6" = 1'-0"

revisions:

mark	description	date
1		
2		
3		
4		
5		
6		
7		

date: 15 FEBRUARY 2012
project number: 201103
drawn by: Author
checked by: Checker
project status: 100% DFCM REVIEW

current: as of 2/15/2012 2:43:42 PM
file path: T:\Projects\2011 Field House Addition_Architecture\201103_VERNAL FIELD HOUSE OF NATURAL HISTORY MUSEUM - ADDITION.rvt

The drawings, specifications, designs and other documents and instruments of service are considered to be the property of the Babcock Design Group, Inc. (BDG) and are protected by copyright. They are intended for use only in connection with the project for which they were prepared. They are not intended for use by any other person or entity or for any other project. Any reproduction or other use of the drawings, specifications, designs and other documents and instruments of service without the express written consent of BDG, or otherwise used without the prior written consent of Babcock Design Group, Inc. is prohibited.

COPYRIGHT © 2009 BABCOCK DESIGN GROUP

VERNAL FIELD HOUSE OF NATURAL HISTORY MUSEUM - ADDITION

for:

UTAH STATE PARKS AND RECREATION/UINTAH COUNTY

470 EAST MAIN STREET VERNAL, UTAH 84078

stamp:

JWL + BDG Architecture

32 exchange place salt lake city, ut 84111 t. 801.531.1146 f. 801.363.3132 www.babcockdesign.com

sheet title: EXTERIOR DETAILS

sheet number: A801

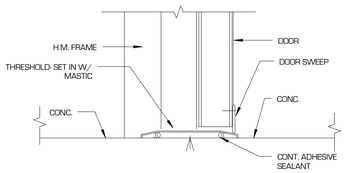

12 CONCRETE TO CONCRETE THRESHOLD DETAILS
3" = 1'-0"

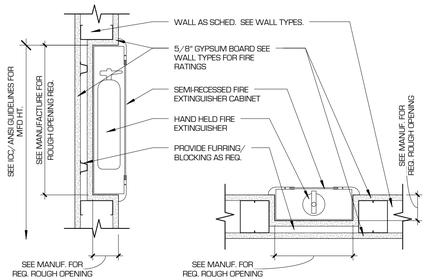

13 FIRE EXTINGUISHER CABINET
1 1/2" = 1'-0"

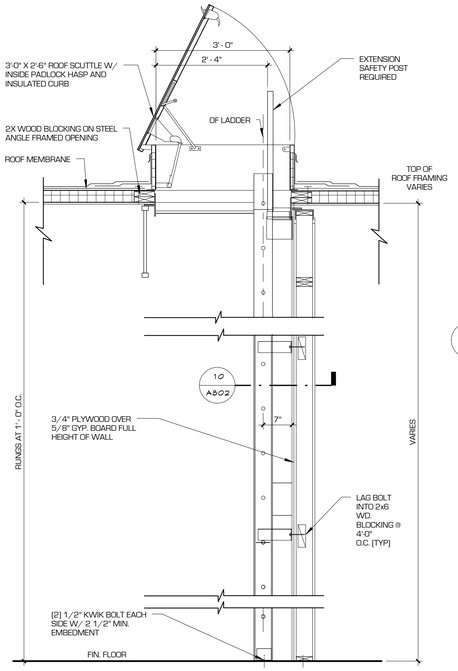

9 ROOF LADDER HATCH DETAIL
1/2" = 1'-0"

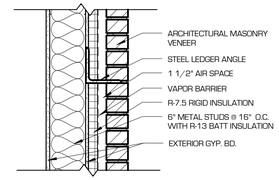

5 TYPICAL MASONRY LEDGER ANGLE DETAIL
1" = 1'-0"

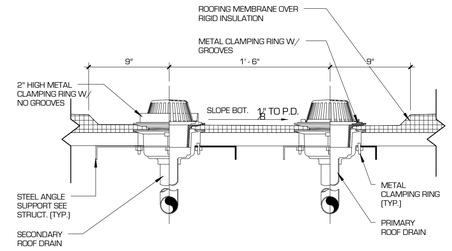

1 ROOF DRAIN
1 1/2" = 1'-0"

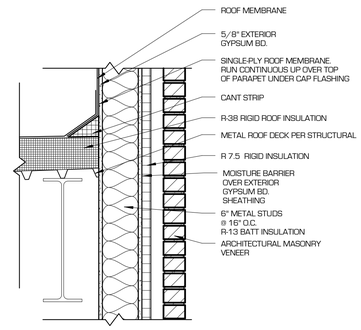

6 ROOF EDGE @ PARAPET
1" = 1'-0"

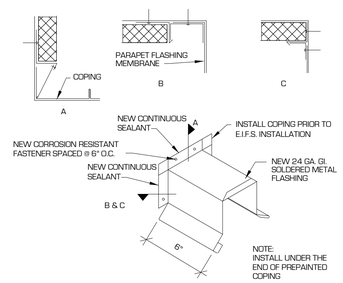

2 COPING END DETAIL AT EIFS
1/2" = 1'-0"

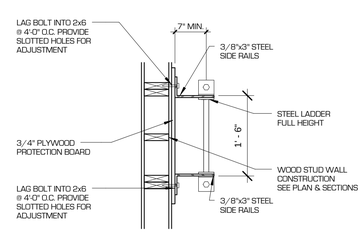

10 ROOF LADDER HATCH PLAN
3/4" = 1'-0"

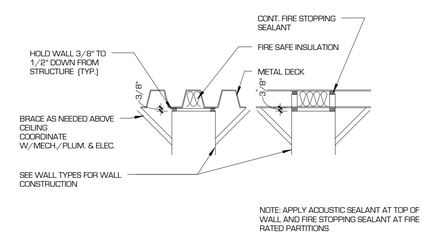

7 WALL TERMINATION @ DECK 2
1 1/2" = 1'-0"

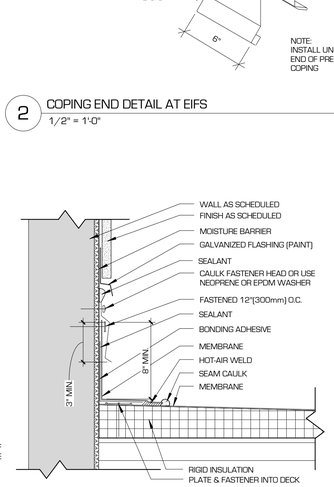

3 REGLET DETAILS
1 1/2" = 1'-0"

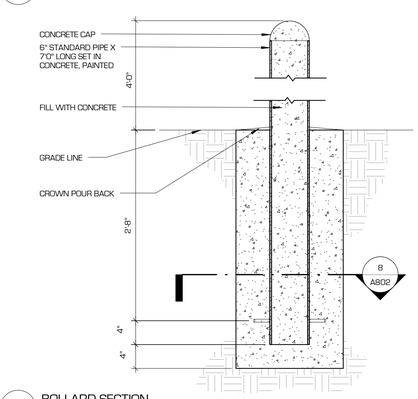

11 BOLLARD SECTION
1/2" = 1'-0"

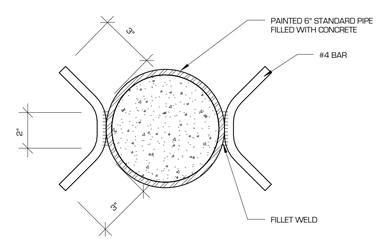

8 BOLLARD CROSS SECTION
3" = 1'-0"

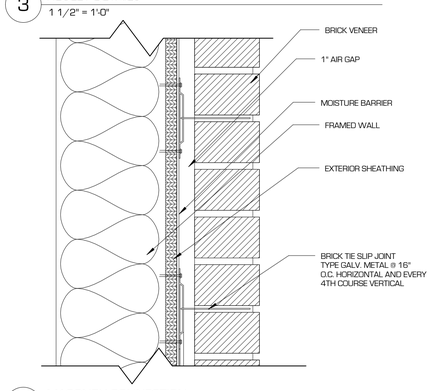

4 MASONRY CONNECTION
3" = 1'-0"

revisions:

no.	description	date
1		
2		
3		
4		
5		
6		
7		

date: 15 FEBRUARY 2012
project number: 201103
drawn by: Author
checked by: Checker
project status: 100% DFCM REVIEW
current: as of: 2/15/2012 2:43:48 PM
original drawing size: 24" x 36"
file path: Z:\Revit Projects\201103 Vernal Natural History Museum Addition_Architecture.rvt

The drawings, specifications, designs and other documents and instruments of service are considered to be the property of the Architect and are protected by copyright. They are loaned for the use of the addressee only in connection with this notice. They are not to be used for any purpose other than those specifically indicated by the Architect in writing. They are not to be reproduced, copied or made available to others without the express written consent of the Architect. Any reproduction of the contained projects, designs and drawings is prohibited. Any reproduction of the contained projects, designs and drawings in digital form, or otherwise used without the prior written consent of Babcock Design Group, Inc.
COPYRIGHT © 2009 BABCOCK DESIGN GROUP

VERNAL FIELD HOUSE OF NATURAL HISTORY MUSEUM - ADDITION

for:

UTAH STATE PARKS AND RECREATION/UINTAH COUNTY

470 EAST MAIN STREET VERNAL, UTAH 84078

stamp:

JWL + BDG Architecture

59 exchange place suite 200 slc, ut 84111 t 801.531.1146 f 801.363.3132
www.babcockdesign.com

sheet title: EXTERIOR DETAILS

sheet number: A802

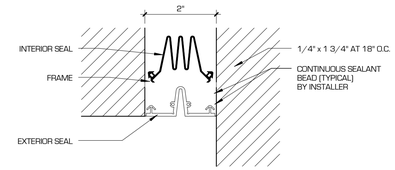

4 SEISMIC EXPANSION EXTERIOR JOINT
6" = 1'-0"

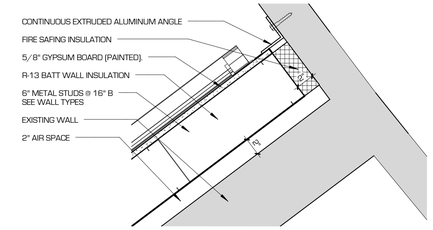

1 DETAIL AT PRE. LAB WEST WALL
1 1/2" = 1'-0"

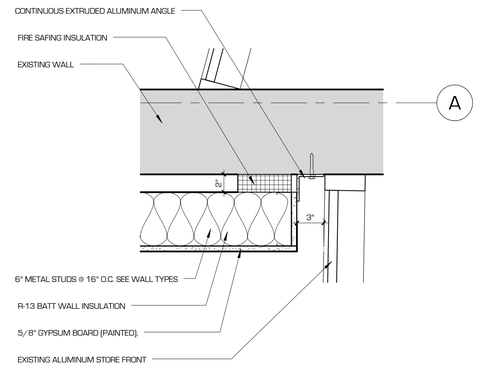

5 DETAIL AT PRE. LAB NORTH WALL
1 1/2" = 1'-0"

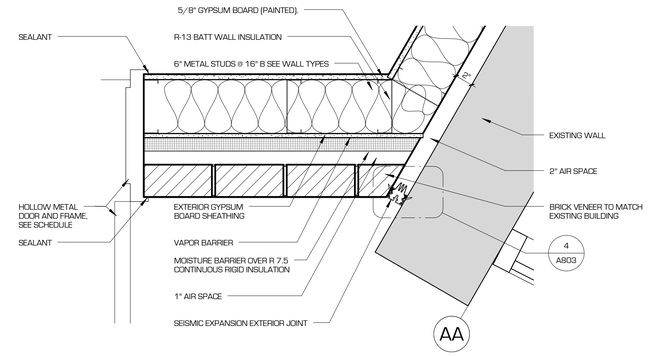

2 DETAIL AT SHIPPING AND RECEIVING WALL
1 1/2" = 1'-0"

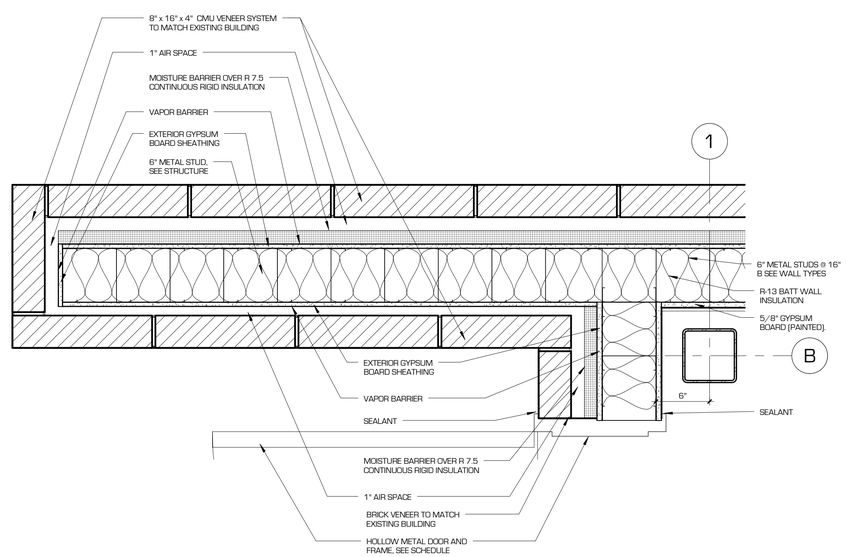

6 DETAIL AT EXTERIOR NORTH WALL
1 1/2" = 1'-0"

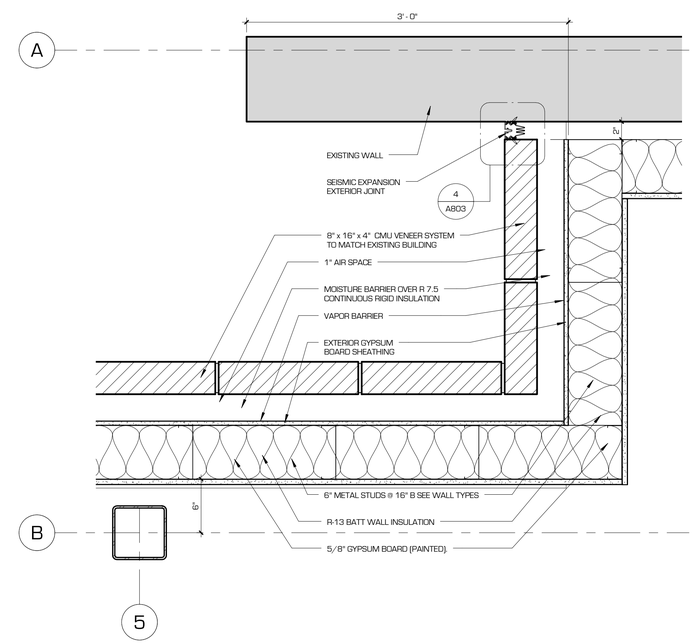

3 DETAIL AT PRE. LAB NORTH WALLS
1 1/2" = 1'-0"

revisions:		
num:	description	date

date: 15 FEBRUARY 2012
project number: 201103
drawn by: Author
checked by: Checker
project status: 100% DFCM REVIEW

current: as of 2/15/2012 2:43:49 PM
original drawing is 24" x 36"
file path: C:\Users\Author\Desktop\VFHM_201103_Addition_Architecture.rvt

The drawings, specifications, designs and ideas herein are considered to be the intellectual property of the architect. Reproduction of these documents, in whole or in part, in any form or by any means, electronic or mechanical, including photocopying, recording, or any information storage and retrieval system, is prohibited without the written consent of the architect. These are instruments for use only for the original project shown herein and are not to be used for any other project. Any modifications of this copyrighted property, or any other violation of the copyright, will be prosecuted to the full extent of the law. Any copy of this document, or any part thereof, must include this notice and the following copyright notice in its entirety: COPYRIGHT © 2009 BABCOCK DESIGN GROUP.

stamp:

VERNAL FIELD HOUSE OF NATURAL HISTORY MUSEUM - ADDITION

for:

UTAH STATE PARKS AND RECREATION/UINTAH COUNTY

470 EAST MAIN STREET VERNAL, UTAH 84078

JWL + BDG Architecture

59 exchange place suite 100 slc, ut 84111 t 801.531.1146 f 801.363.3132
www.babcockdesign.com

sheet title: EXTERIOR DETAILS

sheet number: A803

GENERAL STRUCTURAL NOTES

GENERAL

1. The structural notes are intended to complement the project specifications. Specific notes and details in the drawings shall govern over the structural notes and typical details.
2. Typical details and sections shall apply where specific details are not shown.
3. The contractor shall verify all site conditions and dimensions. If actual conditions differ from those shown in the contract drawings, the contractor shall immediately notify the architect/engineer before proceeding with the fabrication or construction of any effected elements.
4. Omissions or conflicts between the contract drawings and/or specifications shall be brought to the attention of the architect/engineer before proceeding with any work involved. In case of conflict, follow the most stringent requirement as directed by the architect/engineer at no additional cost to the owner.
5. The contractor shall submit a written request to the architect/engineer before proceeding with any changes, substitutions or modifications. Any work done by the contractor before receiving written approval will be at the contractor's risk.
6. The contractor shall coordinate with all trades any items that are to be integrated into the structural system such as openings, penetrations, mechanical and electrical equipment, etc. Sizes and locations of mechanical and other equipment that differs from those shown on the contract drawings shall be reported to the architect/engineer.
7. The contractor shall provide adequate shoring and bracing as required for his method of erection. Shoring and bracing shall remain in place until final connections for the permanent members are completed. The building shall not be considered stable until all connections are completed. Walls shall not be considered self-supporting and shall be braced until the roof system is completed.
8. Site observations by BHB Consulting Engineers, P.C.'s field representative shall not be construed as approval of construction procedures nor special inspection.
9. Detailing and shop drawing production for structural elements will require information (including dimensions) contained in the architectural, structural and/or other consultants' drawings. The structural drawings shall be used in conjunction with the architectural and other consultant's drawings. Some dimensions and elements such as elevations, depressions, slopes, mechanical housekeeping pads, etc. are not shown in the structural drawings. All dimensions shown on structural drawings shall be verified by contractor with architectural, mechanical and electrical drawings.
10. Review of shop drawing submittals by BHB Consulting Engineers, P.C. is for general compliance only and is not intended for approval. The shop drawing review shall not relieve the contractor from the responsibility of completing the project according to the contract documents.
11. Shop drawings made from reproductions of the contract drawings will be rejected unless the contractor signs a release agreement prior to the shop drawings being reviewed.
12. Only an authorized representative of BHB Consulting Engineers, P.C. may make changes to these contract drawings. BHB Consulting Engineers, P.C. shall not be held responsible or liable for any claims arising directly or indirectly from changes made without written authorization by an authorized representative of BHB Consulting Engineers, P.C.

BASIS OF DESIGN

1. Governing Building Code — International Building Code 2009
2. Roof Snow Load
   a. Ground Snow Load — P_g = 43 psf
   b. Snow Importance Factor — I_s = 1.0
   c. Snow Exposure Coefficient — C_e = 1.0
   d. Thermal Exposure Coefficient — C_t = 1.0
   e. Roof Snow Load — $P_f = 0.7 * C_e * C_t * I_s * P_g$ = 30 psf plus Snow Drift
3. Seismic Loads
   a. Occupancy Category — II
   b. Seismic Importance Factor, I_e — 1.0
   c. Seismic Design Category — D
   d. Mapped Spectral Acceleration
      S_S = 0.339g S_1 = 0.089g
   e. Soil Site Class — C
   f. Soil Site Coefficients
      F_a = 1.529 F_v = 2.4
   g. 5% Damped Design Spectral Response Acceleration
      $S_{DS} = 2/3 * F_a * S_S$ = 0.346g $S_{D1} = 2/3 * F_V * S_1$ = 0.142g
   h. Basic Seismic-Force-Resisting System — Ordinary Braced Frame
   i. Response Modification Coefficient — R = 3.25
   j. System Over-strength Factor — 2.0
   k. Deflection Amplification Factor — 3.25
   l. Fundamental Building Period — T = 0.17 seconds
   m. Seismic Response Coefficient — $C_s = S_{DS} * I_e / R$
      $C_s = S_{D1} * I_e / (R*T)$
   n. W — Dead Loads of Structure
   o. Base Shear — $V = C_S * W$ = 0.106 W (Strength Design)
   p. Analysis Procedure — Equivalent Lateral Force (Static)

5. Wind Loads
   a. Wind Velocity (3 Second Gust) — 90 mph
   b. Exposure Type — C
   c. Wind Importance Factor, I_W — 1.00
   d. Internal Pressure Coefficient, GC_{pi} — +/-0.18
   e. Topographic Factor, K_{zt} — 1.0
   f. Components and Cladding Wind Force Table (psf)

Component Elevation above grade	Effective Wind Area for Component(sq ft.)				
	10 sq ft.	20 sq ft.	50 sq ft.	100 sq ft.	500 sq ft.
0-15 ft	23.60	22.02	19.97	18.27	14.64
20 ft	25.16	23.48	21.29	19.48	15.61
25 ft	26.33	24.57	22.28	20.39	16.34

Dated September 7, 2005.

2. Soil Bearing Pressure: 3000psf, on native soils or compacted structural fill.
3. Frost Protection: 36 inches minimum to bottom of footing for exterior footings
   18 inches minimum to bottom of footing for interior footings
   Contractor shall field verify that the footing elevations and final grades indicated on the plans will provide the minimum frost protection. The contractor shall notify the architect/engineer if there are any locations where the minimum frost protection might not be achieved prior to placing concrete.
4. Lateral Soil Pressure Fluid Equivalent Density.
   a. Active ....60 pcf (retaining walls)
   b. At Rest ....80 pcf (rigid foundation walls)
   c. Passive....................250 pcf
5. Coefficient of Friction 0.35

EARTHWORK

1. All footings shall bear on suitable natural material or compacted structural fill extending down to suitable natural material.
2. Concrete floor slabs shall bear on a minimum 6-inch blanket of granular base course material.
3. Consult the project specifications and soils report for further earthwork requirements.

CONCRETE

1. Materials, unless noted otherwise:
   a. Normal weight aggregates — ASTM C 33
   b. Reinforcing Steel — ASTM 615 Grade 60 (Fy = 60 ksi)
      Use Grade 40 (Fy = 40 ksi) for field bent dowels with spacings indicated reduced by 1/3.
   c. Deformed Bar Anchors (DBA) — ASTM A496
   d. Headed Stud Anchors (HSA) — ASTM A108
   e. Anchor Rods — ASTM F1554, Grade 36, with ASTM A563 heavy hex nuts and hardened washers Grade .
   f. Admixtures:
      i. Air-entraining admixtures comply with ASTM C 260 (when used).
      ii Calcium chloride shall not be added to the concrete mix.
   g. Type I/II cement complying with ASTM C-150 shall be used for all concrete.
   h. Blended cement Type GU complying with ASTM C1157
   i. Fly Ash - ASTM C618, Class F – 20% maximum cementitious content
   j. The water/cement ratios shall meet the requirements of Table 4.3.1 of ACI 318.
   k. Provide air entraining as recommended by Table 4.4.1 of ACI 318.
   l. No aluminum conduit or product containing aluminum or any other material injurious to concrete shall be embedded in concrete.
2. Compressive strengths of concrete at 28 days shall be as follows:
   a. Interior Footings& Interior Foundation Walls
      Strength....................3,000 psi
      Classification .... FO, SO, PO, CO
   b. Exterior Footings & Exterior Foundation Walls
      Strength....................4,500 psi
      Classification .... F2, SO, P1, C1
   c. Interior Slabs on Grade
      Strength....................3,000 psi
      Classification .... FO, SO, PO, CO
   d. All Site Concrete
      Strength....................5,000 psi
      Classification .... F3, SO, P1, C2
3. Only one grade or type of concrete shall be poured on the site at any given time.
4. The contractor shall be responsible for the design, detailing, care, placement and removal of all formwork and shores.
   a. Supporting forms and shoring shall not be removed until structural members have acquired sufficient strength to safely support their own weight and any construction load to which they may be subjected. In no case, however, shall forms and shoring be removed in less than 24 hours after concrete placement.
5. Reinforcement shall have the following concrete cover:
   Cast-in-place Concrete:....................Clear Cover
   a. Cast against and permanently exposed to earth ....3"
   b. Formed concrete exposed to earth or weather:
      #6 thru #18 bars ....2"
      #5 and smaller bars ....1-1/2"
   c. Concrete not exposed to weather or in contact with ground:
      Slabs, Walls, Joists; #11 bars and smaller....................3/4"
      Beams, Columns: Primary Reinf., Ties, Stirrups, Spirals ....1-1/2"
6. Construction Joints, Control Joints and Contraction Joints:
   a. Provide a formed and beveled 2 x 4 x continuous keyway in all horizontal and vertical construction joints including between top of footing and foundation walls, unless noted otherwise. In addition, all joints shall be intentionally roughened to a full amplitude of approximately 1/4 inch.
   b. Control joints shall be installed in slabs on grade so the length to width ratio of the slab is no more than 1.25:1. Control joints shall be completed within 12 hours of concrete placement. Control joints may be installed by:
      i. Saw cut a depth of 1/4 the thickness of the slab
      ii. Tooled joints a depth of 1/4 the thickness of the slab
   c. Install construction or control joints in slabs on grade at a spacing not to exceed 30 times the slab thickness in any direction, unless noted otherwise. Construction joints shall not exceed a distance of 125'-0" o.c. in any direction.
7. Construction
   a. Use chairs or other support devices recommended by the CRSI to support and tie reinforcement bars prior to placing concrete. Reinforcing steel for slabs on grade shall be adequately supported on precast concrete units. Lifting the reinforcing off the grade during placement of concrete is not permitted.
   b. Concrete to be mechanically consolidated during placement per ACI standards.
   c. Contractor shall coordinate placement of all openings, curbs, dowels, sleeves, conduits, bolts, inserts and other embedded items prior to concrete placement.
   d. All embeds and dowels shall be securely tied to formwork or to adjacent reinforcing prior to the placement of concrete.
   e. No pipes, ducts, sleeves, etc shall be placed in structural concrete unless specifically detailed or approved by the structural engineer. Penetrations through walls when approved shall be built into the wall prior to concrete placement. Penetrations will not be allowed in footings or grade beams unless detailed. Piping shall be routed around footings and grade beams and unless detailed. Footings shall be stepped to avoid piping.
   f. Reinforcing Bars shall not be welded. Do not substitute reinforcing bars for DBAs or HSAs.
8. Detailing:
   a. Lap splice lengths shall be detailed to comply with the "Concrete Reinforcing Bar Lap Splice Schedule" on sheet S-601. Splices may be made with mechanical splices capable of 125% tension capacity of the bar being spliced. Mechanical splices shall be the positive connecting type coupler and shall meet all International Building Code requirements. Use "Cadweld", "Lenton" Standard Couplers, "Bar-Lock" or equal with internal protector. If mechanical splices are used, splices or couplers on adjacent bars shall be staggered a minimum of 24" apart along the longitudinal axis of the reinforcing bars.
   b. At joints provide reinforcing dowels to match the member reinforcing, unless noted otherwise.
   c. At all discontinuous control or construction slab on grade joints, provide 2 - #4 x 48 inches.
   d. Provide corner bars at intersecting wall corners using the same bar size and spacing as the horizontal wall reinforcing.
   e. All vertical reinforcing shall be doweled to footings, or to the structure below with the same size and spacing as the vertical reinforcing for the element above. Dowels extending into footings shall terminate with a 90 degree standard hook and shall extend to within 4" of the bottom of the footing. Footing dowels (#8 bars and smaller) with hooks need not extend more than 20" into footings.
   f. Horizontal wall reinforcing shall terminate at ends of walls and openings into the far end of the jamb column with a 90-degree standard hook plus a 6 bar diameter extension. Horizontal wall reinforcing shall be continuous through construction and control joints.

POST-INSTALLED ANCHORS

1. Epoxy Anchors
   a. For concrete, the epoxy shall be HIT RE 500-SD (ICC-ESR-2322) by Hilti Corporation, HIT_HY 150 MAX-SD (ICC-ESR-3013) by Hilti Corporation, Powers PE1000 + (ICC-ESR-2583) by Powers Fasteners Inc, or SET-XP (ICC-ESR-2508) by Simpson Strong Tie.
   b. Follow all of the manufacturer's recommendations and ICC-ESR for epoxy installation.
   c. Alternative epoxies may be used if an ICC-ESR approval for use in cracked concrete is submitted to the structural engineer prior to use.
2. Mechanical Anchors
   a. For concrete, the mechanical anchor shall be Kwik Bolt TZ-CS (ICC-ESR-1917) by Hilti Corporation, Strong-Bolt (ESR-1771) by Simpson Strong Tie Inc., or Power-Stud+ SD1 (ICC-ESR-2818) by Powers Fasteners Inc.
   b. Follow all of the manufacturer's recommendations and ICC-ESR for mechanical anchor installation.
   c. Alternative mechanical anchors may be used if an ICC-ESR approval for use in cracked concrete is submitted to the structural engineer prior to use.
   d. is submitted to the structural engineer prior to use.
3. Powder Actuated Fasteners
   a. For fasteners driven into steel, the fastener shall be X-U P8 TH Universal Knurled Shank Fastener (ICC-ESR-2269) by Hilti Corporation, PDPA (ICC-ESR-2138) by Simpson Strong Tie Inc. or 8mm Head Spiral CSI Drive Pin (ICC-ESR-1995) by Powers Fasteners Inc.
   b. For fasteners driven into concrete, the fastener shall be X-U Universal Knurled Shank Fastener (ICC-ESR-2269) by Hilti Corporation, PDP or PHN (ICC-ESR-2138) by Simpson Strong Tie Inc. or 8mm Head Spiral CSI Drive Pin (ICC-ESR-1995) by Powers Fasteners Inc.

STRUCTURAL STEEL

1. Material:
   a. Wide Flanges Section — ASTM A992 (50 ksi)
   b. Other shapes & Plates — ASTM A36 (36 ksi)
   c. Square or Rectangular HSS — ASTM A500 (46 ksi) Grade B
   d. Deformed Bar Anchors (DBA) — ASTM A496
   e. Headed Stud Anchors (HSA) — ASTM A108
   f. Anchor Rods — ASTM F1554, Grade 36, with ASTM A563 heavy hex nuts and ASTM F436 hardened washers Grade A
   g. Bolted Connections: — ASTM A325 with ASTM A563 nuts and ASTM F436 hardened washers.
2. Fabrication and construction shall comply with the latest edition of the following Codes and Standards:
   a. American Institute of Steel Construction (AISC), "Specification for the Design, Fabrication and Erection of Structural Steel for Buildings," with "Commentary".
   b. AISC "Code of Standard Practice" excluding the following: Section 3.4, Section 4.4, Section 4.4.1,
   c. AISC "Specification for Structural Joints Using ASTM A325 or A490 Bolts"
   d. American Welding Society (AWS), Structural Welding Code (specific items do not apply when they conflict with the AISC requirements).
   e. AISC "Seismic Provision for Structural Steel Buildings"
3. Welding
   a. All welding and cutting shall be performed by AWS certified welders.
   b. Use E-70 XX or as noted otherwise. E60 XX may be used for welding steel roof decks.
   c. All intersecting steel shapes which are not bolted shall be connected by a fillet weld all around, unless noted otherwise. Where fillet weld sizes are not shown they shall be 1/16" less than the thinnest of the connected parts for thicknesses 1/4" and larger. Fillet welds on plates less than 1/4" shall be of the same size as the thinnest of the connected part.
   d. Reinforcing Bars: Do not weld rebar. Do not substitute reinforcing bars for deformed bar anchors (DBAs), machine bolts, or headed stud anchors (HSAs).
   e. Do not weld anchor bolts, including "tack" welds.
   f. Headed Stud Anchors (HSAs) welding and deformed bar anchor welding shall conform to the manufacturer's specifications.
4. Bolted Connections:
   a. Use ASTM A325N bolts for steel to steel connections, as noted herein or as noted on the drawings. A325N bolts shall be used in connections for simple span framing and beam (or girder) to bearing plate connections. Tighten bolts to a snug tight condition. See sheet S-602.
   b. Use hardened washers beneath the turned element of all bolts or nuts. Use hardened beveled washers, to compensate for the lack of parallelism, where the outer face of the bolted parts has a slope greater than one in twenty with respect to the plane normal to the bolt axis. At oversized holes hardened washers or plates shall conform with ASTM F-436 and shall completely cover the slot after installation.
   c. Where a steel to steel beam connection is not shown, provide a standard AISC framed connection for one half the total uniform load capacity of the beam for the span and steel specified.
   d. Bolts, nuts and washers shall not be reused.
5. Provide steel angle lintels at all openings through masonry veneer. See Detail 9/S-512. Steel lintel angles shall be galvanized at all exterior conditions where exposed to weather.
6. Provide full-depth web-stiffener plates at each side of all beams at all bearing points. Stiffener plates shall be the thickness called out below unless noted otherwise and shall be welded both sides with fillet welds all around:

FLANGE WIDTH	STIFFENER THICKNESS	WELD SIZE
Less than 8 1/4"	1/4"	3/16"
8 1/4" to 12 1/4"	3/8"	1/4"
12 1/4" to 16 ½"	1/2"	5/16"
16 ½" to 20 ¾"	5/8"	3/8"

OPEN WEB STEEL JOISTS

1. All open web steel joist shall be fabricated and erected in accordance with the latest edition of Steel Joist Institute (SJI), "Standard Specifications and Code of Standard Practice".
2. At the completion of fabrication, the steel joist manufacturer shall submit to the building official a certificate of compliance in accordance with IBC Section 1704.2.2 stating if the work was performed in accordance with approved construction documents and with SJI standard specifications.
3. Joists with slopes greater than 1/2 inch per foot shall be designed to meet or exceed the load capacities, listed in the SJI load tables, of the joist sizes indicated on the framing plan, as if the joists or girders were installed level.
4. Provide special bearing ends to accommodate slopes from sloped joists or sloped bearing conditions.
5. Modifications to any joist, including holes through the top and bottom chords, without the written consent and direction from the manufacturer are not allowed.
6. Joist loads called out in the drawings are allowable stress design (ASD) loads.
7. Open web joist deflection shall be limited to L/240 for total loads and L/360 for live load, unless noted otherwise.
8. Joist bridging shown on plans is for schematic purposes only; actual size, quantity and location of bridging shall be determined by the joist supplier per SJI. Coordinate bridging locations to avoid interference with mechanical, electrical and fire protection equipment and skylights.

METAL DECKING

1. Steel deck shall comply with the latest requirements of the Steel Deck Institute.
2. All deck shall be 3-span continuous minimum. In areas where 3-span conditions are not possible, the contractor shall provide heavier gage deck as required to provide the equivalent loading of the deck under a three span condition.
3. Steel roof deck shall not be used to support loads from plumbing, HVAC ducts, light fixtures, architectural elements or equipment of any kind, unless specifically noted. Light weight suspended acoustical ceilings with a total weight of 50 lbs per attachment may be hung from roof deck. The hangers shall be staggered to distribute the loads over multiple deck flutes.
4. All deck supporting members shall be dry before welding.
5. Clinch seams before welding interlocking seams.
6. Yield stress of the 22 gage steel deck shall be limited to a maximum of 50 ksi.
7. Where deck is to receive sprayed-on fire proofing, painted deck shall be coated with special paint that will allow the sprayed-on fire proofing to adhere to the painted deck.

Steel Roof Deck
   a. Steel roof deck shall be 1.1/2" deep X 20 gage minimum painted, type "B" wide rib deck with interlocking side seams with the following properties:

	20 Gage	18 Gage	16 Gage
Minimum S ($in^3/_{ft}$) =	0.234	0.322	0.411
Minimum I ($in^4/_{ft}$) =	0.213	0.296	0.377

   b. Minimum allowable deck diaphragm shear values shall be 908 plf for a 7'-0" deck span.
   c. Maximum diaphragm flexibility factor shall be 10.3 in^{-6}/lb for a 7'-0" deck span.
   d. Weld steel roof deck to supporting framing members with 3/4" diameter puddle welds at the following spacings (Closer spacing may be used to develop minimum shear requirements.):
      i. 6" o.c. to all supports perpendicular to deck corrugations (7 welds per 36" sheet).6" o.c. to all supports parallel to deck corrugations.
   d. Hilti or Pneutek power driven fasteners are acceptable as an alternative to welds provided the connection meets the diaphragm shear capacity given above. For Hilti call 800-879-8000 extension 6337 for connection information comparison. For Pneutek, call 800-431-8665. If Hilti or Pneutek power driven fasteners are used, the contractor shall submit Hilti's / Pneutek calculations to the Architect/Engineer for review. Also if Hilti of Pneutek power driven fasteners are used, a Hilti / Pneutek representative shall be present before the decking is installed to make sure the installer is properly trained in using the equipment. The Hilti / Pneutek representative shall also make a site visit the day after deck has been started to be installed to verify the power driven fasteners are being installed correctly.
   e. Attach interlocking seams with 1 1/2" long top seam welds at 18" o.c. maximum or with Verco PunchLok System at 12" o.c. maximum, with ASC Delta Grip System at 12" o.c. maximum or with Wheeling Gator-Seismic Shearloc at 12" o.c maximum. Closer spacing may be used to develop minimum shear requirements. A standard button punch can **not** be used in place of Verco PunchLok, DeltaGrip or Gator-Seismic Shearloc.
   f. Provide a 2-inch minimum bearing and a 4-inch lap at the splice points.

COLD-FORMED STEEL

1. All cold-formed steel shall meet the requirements of "Specifications for the Design of Cold-Formed Steel Structural Members" by American Iron and Steel Institute (AISI).
2. Light Gauge Steel Framing:
   a. Galvanized steel shall meet the minimum requirements of ASTM A653 (Fy = 50 ksi) for 97 mil (12 gauge), 68 mil (14 gauge) and 54 mil (16 gauge). For 43 mil (18 gauge) and lighter galvanized steel shall meet and ASTM A653 (Fy = 33 ksi). Galvanized coatings must meet the ASTM A924.
   b. Follow all manufacturers' recommendations for the use of these products.
   c. Unless noted otherwise, all welded connections shall be done according to AWS standards.
   d. All interior non-bearing steel-stud walls that extend above the ceiling but do not attach to the structure above shall be brace with diagonal metal-stud braces (45 degrees). The kl/r ratio of the brace shall not exceed 200 and shall not be spaced further apart than 10'-0" o.c. Connect diagonal braces to the top of the steel stud walls and to the top flange of the steel beams with two #10 tek screws minimum. Where a concrete deck occurs above, use two powder-driven fasteners per diagonal brace. Other approved methods may be used.

SPECIAL INSPECTION AND QUALITY ASSURANCE

Special inspection and quality assurance, as required by section 1704 thru 1709 of the IBC, shall be provided by an independent agency employed by the owner unless waived by the building official. The contractor shall coordinate and cooperate with the required inspections. All testing and inspection reports shall be sent within 24 hours of the test to the architect, engineer, building official and contractor for review. Special inspection during fabrication is not required if the fabricator is registered and approved to perform such work with out special inspection. Items requiring special inspection and quality assurance are:

1. Soils (IBC 1704.7)
   a. Prior to placement of the prepared fill, the special inspector shall determine that the site has been prepared in accordance with the soils report.
   b. During placement and compaction of the fill material, the special inspector shall determine that the material being used and the maximum lift thickness comply with the soils report.
   c. The special inspector shall determine that the in-place dry density of the compacted fill material complies with the soils report.
      i. Continuous Footing Backfill: At each compacted backfill layer, at least one test for each 40 linear feet or less of wall length, but no fewer than 2 tests.
      ii. Spot Footing Backfill: Minimum of one compaction test for each lift for each spot footing.
   d. See specifications for further requirements.
2. Concrete placement (IBC Section 1704.4)
   a. Continuous special inspection shall be provided
   b. Cylinders, slump, temperature and air-entrainment shall be done for every 50 cubic yards or each day's production if the day's production is less than 50 cubic yards.
   c. Protection of concrete during cold and hot weather
   d. See specifications for further concrete testing requirements.
3. Bolts installed in concrete (IBC Section 1704.4)
   a. Continuous special inspection shall be provided for all bolts installed prior to and during concrete placement.
4. Embeds and Inserts installed in concrete (IBC Section 1704.4)
   a. Continuous special inspection shall be provided for all embeds and inserts installed prior to and during concrete placement.
5. Concrete reinforcing steel placement (IBC Section 1704.4)
   a. Periodic special inspected shall be provided for all reinforcing prior to concrete placement.
6. Structural welding, including steel deck (IBC 1707.2 and 1704.3)
   a. Periodic special inspection of metal floor prior to concrete placement and roof decks.
   b. Periodic special inspection of single pass fillet welds less than or equal to 5/16"
   c. Continuous special inspection of single pass fillet welds greater than 5/16" and multi-pass fillet welds.
   d. Continuous special inspection of complete and partial penetration welds.
7. Metal deck using mechanical attachments (IBC Section 1704.15)
   a. Periodic special inspection of metal floor prior to concrete placement and roof decks. Special inspection shall be done to verify size and spacing of shot pins / screws for deck attachment to the supporting structural. Also special inspection shall be done to verify spacing and size of seam attachments.
8. Post Installed Anchors (IBC Section 1704.15)
   a. Epoxy Anchors
      i. Special inspection shall be performed per manufacturer's requirements and approved ICC-ES reports noted in Post-Installed Anchor section of the General Structural Notes prior to installation of epoxy and anchor rod.
      ii. A pull test shall be performed for 10% of the anchors.
   b. Mechanical Anchors and Screw Anchors
      i. Special inspection shall be performed per manufacturer's requirements and approved ICC-ES reports noted in POST INSTALLED ANCHOR section of the General Structural Notes prior to installation of mechanical or screw anchor.

SITE OBSERVATIONS BY STRUCTURAL ENGINEER

Site observations, as required by IBC section 1709, shall be done by the Engineer of Record or an approved subordinate at the stages of construction listed below. The contractor shall notify the engineer when he has reached the construction stage listed below and before the work to be observed is covered up, walled in or becomes otherwise hidden from view or in-accessible to any necessary corrections. At the conclusion of the project, the structural observer shall submit to the building official a written statement that the site visits have been made and identify any reported deficiencies that to the best of the structural observer's knowledge have not been resolved (See 1709.1).

1. No structural observations are required by code.

DEFERRED SUBMITTALS

For the purpose of this section, deferred submittals are defined as per section 107.3.4.2 of the IBC. Submittal documents for deferred submittal items shall be submitted to the engineer, architect and building official for their review for general conformance with the design of the building. Deferred structural submittals for this project are:

1. Open Web Steel Joists and Girders

LEGEND OF MARKS AND ABREVIATIONS

AB	ANCHOR BOLT(S)	JT	JOINT
ABV	ABOVE	JST	JOIST
ALT	ALTERNATE	k	KIP(S) = 1000 POUNDS
APPROX	APPROXIMATE	KLF	KIPS PER LINEAL FOOT
ARCH	ARCHITECT(URAL)	KSF	KIPS PER SQUARE FOOT
BF-x	BRACED FRAME	LBS	POUNDS
BFC-x	BRACED FRAME COLUMN	LF	LINEAL FOOT
BFSBP-x	BRACED FRAME STEEL BASE PLATE	LLH	LONG LEG HORIZONTAL
BFSCP-x	BRACED FRAME STEEL CAP PLATE	LLV	LONG LEG VERTICAL
BLDG	BUILDING	LSH	LONG SIDE HORIZONTAL
BLW	BELOW	LSV	LONG SIDE VERTICAL
BM	BEAM	MAX	MAXIMUM
BOT	BOTTOM	MECH	MECHANICAL
BRG	BEARING	MFR	MANUFACTURER
BTWN	BETWEEN	MIN	MINIMUM
CC	CENTER-TO CENTER	MISC	MISCELLANEOUS
CC –x	CONCRETE COLUMN	NIC	NOT IN CONTRACT
C.J.	CONST/CONTROL JOINT	NTS	NOT TO SCALE
COL	COLUMN	O.C.	ON CENTER
CONC	CONCRETE	O.F.	OUTSIDE FACE
CONST	CONSTRUCTION	OPNG	OPENING
CP-x	CONCRETE PIER	OPP	OPPOSITE
CRW-x	CONCRETE RETAINING WALL	PCF	POUNDS PER CUBIC FOOT
CTR	CENTER	PL	PLATE
CW-x	CONCRETE WALL	PLF	POUNDS PER LINEAL FOOT
DB	DECK BEARING	PNL	PANEL
DBA	DEFORMED BAR ANCHOR	PSF	POUNDS PER SQUARE FOOT
DBE	DECK BEARING ELEVATION	PSI	POUNDS PER SQUARE INCH
DBL	DOUBLE	PT	POINT
DET	DETAIL	REINF	REINFORCING
DIA	DIAMETER	REQD	REQUIRED
DIM	DIMENSION	R.D.	ROOF DRAIN
DN	DOWN	RTU	ROOF TOP UNITS
DWG	DRAWING	SBP-x	STEEL BASE PLATE MARK
DWL	DOWEL	SC-x	STEEL COLUMN MARK
(E)	EXISTING	SCP-x	STEEL CAP PLATE MARK
EA	EACH	SHT	SHEET
E.F.	EACH FACE	SI	SPECIAL INSPECTION
E.J.	EXPANSION JOINT	SIM	SIMILAR
ELEC	ELECTRICAL	SMU	SUSPENDED MECHANICAL UNITS
ELEV	ELEVATION	SOG	SLAB-ON-GRADE
EQUIP	EQUIPMENT	SQ	SQUARE
EQ	EQUAL	STAG	STAGGERED
E.W.	EACH WAY	STD	STANDARD
EXST	EXISTING	STL	STEEL
EXP	EXPANSION	STR	STRUCTURAL
EXT	EXTERIOR	STS	SELF TAPPING SCREWS
FC-x	CONTINUOUS FOOTING MARK	T&B	TOP AND BOTTOM
F.D.	FLOOR DRAIN	TEMP	TEMPERATURE
FDN	FOUNDATION	THDS	THREADS
F.F.	FINISHED FLOOR	T.O.	TOP OF
FR-x	RECTANGULAR FOOTING MARK	TOC	TOP OF CONCRETE
FS-x	SQUARE FOOTING MARK	TOD	TOP OF DECK
FT	FOOT	TOF	TOP OF FOOTING
FTG	FOOTING	TOS	TOP OF STEEL
FTS-x	THICKEN SLAB MARK	TOW	TOP OF WALL
GA	GAUGE	TYP	TYPICAL
GALV	GALVANIZED	UNO	UNLESS NOTED OTHERWISE
GSN	GENERAL STRUCTURAL NOTES	VERT	VERTICAL
HB	HORIZONTAL BRIDGING	W/	WITH
HORIZ	HORIZONTAL	WT	WALL THICKNESS
HSA	HEADED STUD ANCHOR	WWF	WELDED WIRE FABRIC
HT	HEIGHT	WWM	WELDED WIRE MESH
ICC	INTERNATIONAL CODE COUNCIL		
IBC	INTERNATIONAL BUILDING CODE		
I.F.	INSIDE FACE		
IN.	INCH		
INT	INTERIOR		

"Engineering Results"
BHB Consulting Engineers
A Professional Corporation
2766 South Main Street
Salt Lake City, Utah 84115

revisions: num. | description | date

date: 15 FEB 2012
project number: 11501
drawn by: Author
checked by: Checker
project status: CONSTRUCTION DOCUMENTS

COPYRIGHT © 2009 BABCOCK DESIGN GROUP

JWL + BDG Architecture

VERNAL FIELD HOUSE OF NATURAL HISTORY MUSEUM-ADDITION

for: UTAH STATE PARKS AND RECREATION/UINTAH COUNTY
470 EAST MAIN STRET VERNAL, UTAH 84078

www.babcockdesign.com

sheet title: GENERAL STRUCTURAL NOTES

sheet number: S-001

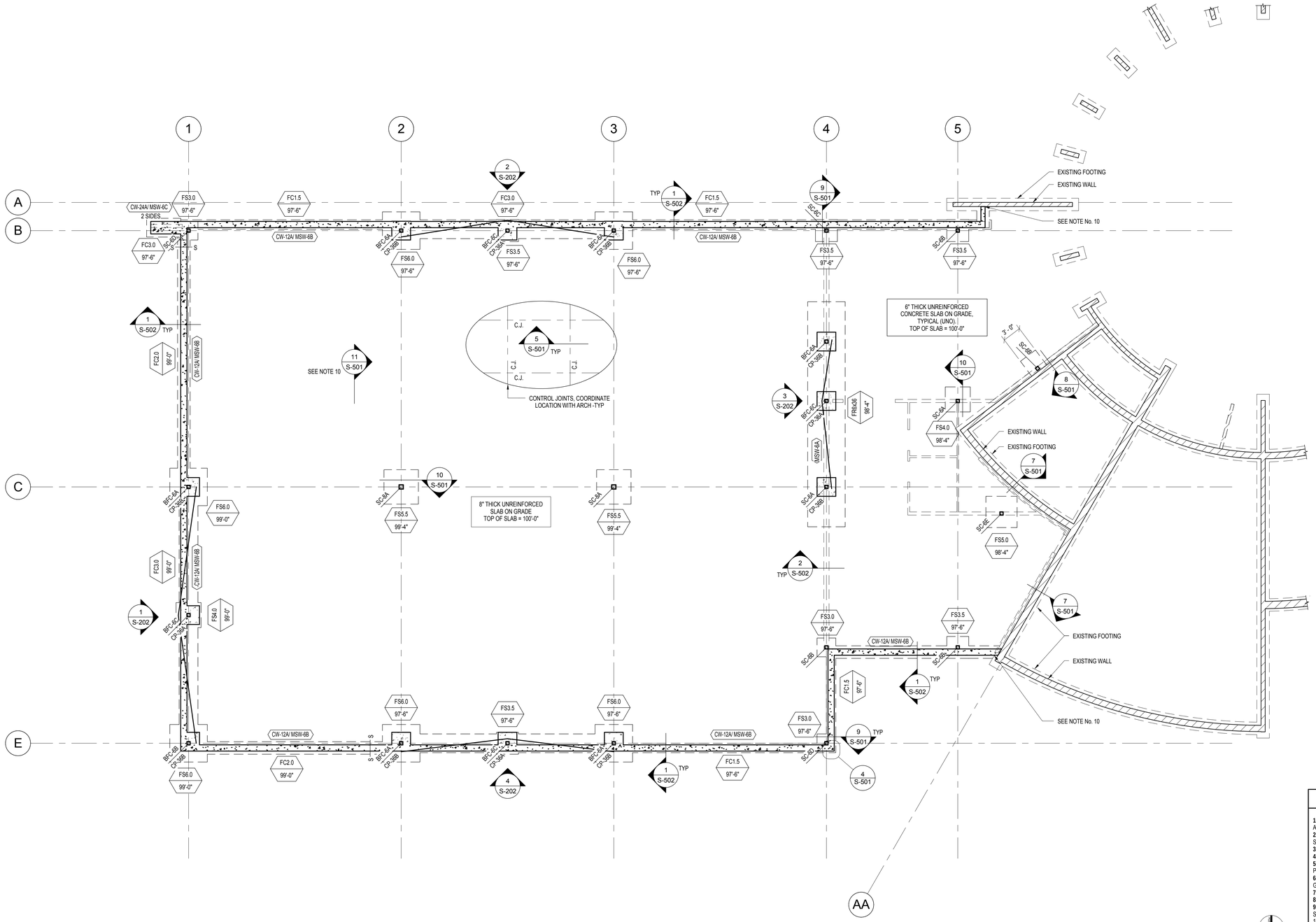

1 FOOTING AND FOUNDATION PLAN
1/8" = 1'-0"

MARKS AND SYMBOLS LEGEND

- DETAIL NUMBER
- DETAIL SHEET
- FOOTING DESIGNATION
- TOP OF FOOTING ELEVATION
- S —— S INDICATES FOOTING STEP, SEE DETAIL 3/S-501.
- DESIGNATE BRACED FRAME TYPE, SEE ELEVATIONS AND DETAILS ON SHEET S-202.
- INDICATES CONCRETE WALL.
- DEPRESS FOUNDATION WALL AND POUR SLAB OVER, SEE DETAIL 1/S-502.
- INDICATES DEPRESSED SLAB, SEE ARCHITECTURAL PLANS.
- CW-x INDICATES CONCRETE WALL TYPE, SEE SCHEDULE ON SHEET S-601.
- MSW-x INDICATES METAL STUD WALL TYPE, SEE SCHEDULE ON SHEET S-601.
- FCxx INDICATES CONTINUOUS CONCRETE FOOTING TYPE, SEE SCHEDULE ON SHEET S-601.
- FSxx INDICATES CONCRETE SPOT FOOTING TYPE, SEE SCHEDULE ON SHEET S-601.
- FRxx INDICATES RECTANGULAR CONCRETE FOOTING TYPE, SEE SCHEDULE ON SHEET S-601.
- C.J. INDICATES CONTROL/CONSTRUCTION JOINT, SEE DETAILS 5/S-501.
- SC-x INDICATES STEEL COLUMN TYPE, SEE SCHEDULE ON SHEET S-601.
- CP-x INDICATES CONCRETE PIER TYPE, SEE SCHEDULE ON SHEET S-601.

FOOTING AND FOUNDATION PLAN NOTES

1. COORDINATE LOCATION OF DEPRESSED SLABS, SLOPED SLABS, AND FLOOR DRAINS WITH ARCHITECTURAL AND MECHANICAL DRAWINGS.
2. SEE ARCHITECTURAL AND CIVIL DRAWINGS FOR EXTERIOR CONCRETE WORK AT DOORS, SIDEWALKS, ETC.
3. SEE ARCHITECTURAL DRAWINGS FOR CONTROL JOINT LOCATIONS.
4. ALL SPOT FOOTINGS SHALL BE CENTERED UNDER COLUMNS (UNO).
5. SEE DETAILS 1/S-501 AND 2/S-501 FOR CONDITION WHERE BURIED PIPES RUN PARALLEL AND PERPENDICULAR TO FOOTINGS.
6. SEE DETAIL 5/S-501 FOR TYPICAL CONTROL/CONSTRUCTION JOINTS IN CONCRETE SLAB ON GRADE.
7. SEE DETAIL 6/S-501 FOR SLAB REINFORCING WHERE CONTROL JOINTS ARE DISCONTINUOUS.
8. SEE ARCHITECTURAL DRAWINGS FOR DIMENSIONS TO ALL STEEL COLUMNS.
9. WHERE NOTED, DRILL AND EPOXY DOWEL INTO EXISTING STRUCTURE; MATCH SIZE AND SPACING OF NEW FOOTING AND FOUNDATION REINFORCING.
10. WHERE NOTED, IF HIGH DENSITY STORAGE SYSTEM IS SELECTED, THE LAYOUT AND LOCATION OF RAIL ASSEMBLY SHALL BE FIELD COORDINATED BY THE CONTRACTOR AND ARCHITECT.

"Engineering Results"
BHB Consulting Engineers
A Professional Corporation
2766 South Main Street
Salt Lake City, Utah 84115
Phone: 801.355.5656
Fax: 801.355.5950
Email: bhb@bhbengineers.com

revisions:		
num	description	date

date:	15 FEB 2012
project number:	11501
drawn by:	MT
checked by:	TB
project status:	CONSTRUCTION DOCUMENTS

Current as of: 2/15/2012 10:38:33 AM original drawing is 24" x 36"
file path: C:\Users\mtaylor\Documents\Revit\Models\11501_SAML_Morgan.rvt

The drawings, specifications, details, and construction details contained herein are the property of BABCOCK DESIGN GROUP and are to be used only for the project specified and are to be used for no other purpose without the written consent of BABCOCK DESIGN GROUP. They are intended for use only for the project specified and are to be used for no other purpose or project. Any other use, reproduction, or distribution of the drawings and specifications without the written consent of BABCOCK DESIGN GROUP, is prohibited. Any copied, reproduced, photographic, modified, published, uploaded, transmitted, distributed, sold, rented, leased, or otherwise used without the express written consent of BABCOCK DESIGN GROUP, is prohibited.
COPYRIGHT © 2009 BABCOCK DESIGN GROUP

stamp:

VERNAL FIELD HOUSE OF NATURAL HISTORY MUSEUM-ADDITION

for:

UTAH STATE PARKS AND RECREATION/UINTAH COUNTY

470 EAST MAIN STRET VERNAL, UTAH 84078

www.babcockdesign.com

JWL + BDG Architecture

sheet title: FOOTING AND FOUNDATION PLAN

sheet number: S-101

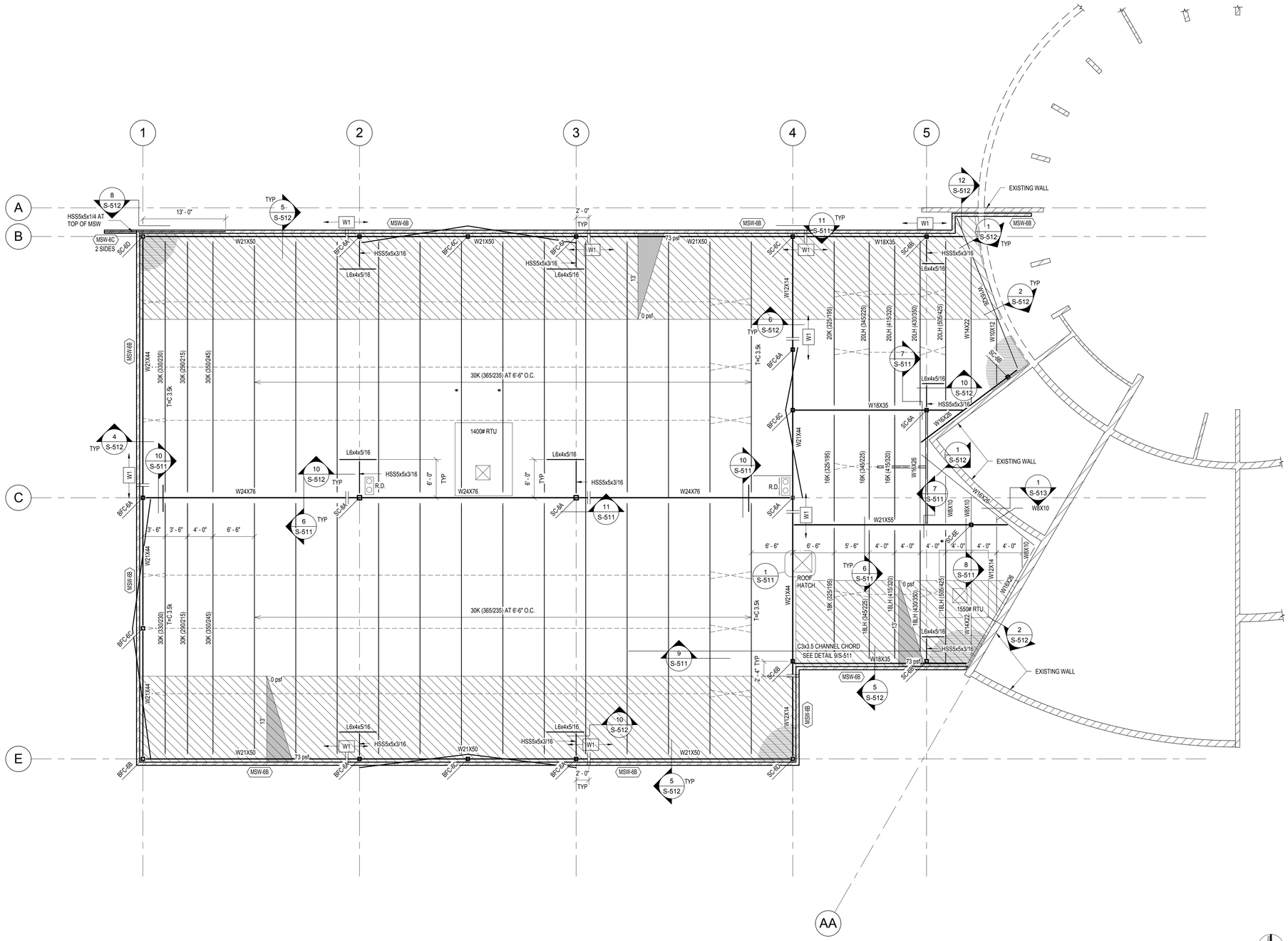

1 ROOF FRAMING PLAN
1/8" = 1'-0"

MARKS AND SYMBOLS LEGEND

- DETAIL NUMBER / DETAIL SHEET
- INDICATES METAL ROOF DECK. SEE GENERAL STRUCTURAL NOTES.
- INDICATES SNOW DRIFT
- INDICATES JOIST TOP CHORD TIES. SEE DETAIL 10/S-511
- W1 — INDICATES FIELD WELDING OF SHEAR TAB CONNECTION. ARROWS INDICATE DIRECTION OF CONNECTION, SEE SCHEDULE ON SHEET S-601
- MSW-x — INDICATES METAL STUD WALL TYPE, SEE SCHEDULE ON SHEET S-601.
- * — INDICATES JOIST SHALL BE DESIGNED DESIGNED FOR A 1000# ADLOAD AT ANY POINT.
- _K ("*/*") — INDICATES K-SERIES JOIST WITH ALLOWABLE TOTAL LOAD / ALLOWABLE LIVE (SNOW) LOAD.
- _LH ("*/*") — INDICATES LH-SERIES JOIST WITH ALLOWABLE TOTAL LOAD / ALLOWABLE LIVE (SNOW) LOAD.
- SC-x — INDICATES STEEL COLUMN TYPE, SEE SCHEDULE ON SHEET S-601.
- BF-x — INDICATES BRACED FRAME TYPE, SEE ELEVATION ON SHEET S-202.
- R.D. — INDICATES ROOF DRAIN, SEE DETAIL 2/S-511.

ROOF FRAMING PLAN NOTES

1. VERIFY ALL ROOF OPENINGS FOR MECHANICAL SHAFTS, DRAINS, ETC. WITH ARCHITECTURAL AND MECHANICAL DRAWINGS.
2. ALL JOISTS SHALL HAVE 5" DEEP BEARING ENDS (UNO).
3. ALL JOIST GIRDERS SHALL HAVE 7.1/2" DEEP BEARING ENDS (UNO).
4. ALL ROOF OPENINGS GREATER THAN, OR EQUAL TO, 12" x 12" SHALL BE FRAMED AS INDICATED IN DETAILS 1/S-511 AND 2/S-511. FOR OPENINGS WHICH CUT LESS THAN TWO DECK FLUTES, SEE DETAIL 3/S-511.
5. SEE DETAIL 4/S-511 WHEN CONCENTRATED LOADS ARE LOCATED MORE THAN 6" FROM JOIST OR JOIST GIRDER PANEL POINT.
6. SEE DETAIL 5/S-511 WHEN MECHANICAL UNITS ARE HUNG BELOW JOISTS.
7. VERIFY SIZE, WEIGHT, AND LOCATION OF ALL ROOF TOP MECHANICAL UNITS WITH ARCHITECTURAL AND MECHANICAL DRAWINGS. SEE DETAIL 6/S-511 FOR STEEL FRAMES AT ALL ROOF TOP EQUIPMENT. COORDINATE OPENINGS WITH MECHANICAL, ELECTRICAL, AND GENERAL CONTRACTORS.
8. SEE DETAIL 9/S-512 FOR BRICK LEDGER DETAIL AT METAL STUD LINTEL.
9. ALL OPENINGS IN EXTERIOR METAL STUD WALL LESS THAN 4'-0" WIDE SHALL HAVE (2) KING STUDS AND (1) JAMB STUD. SEE DETAIL 11/S-512. SEE DETAIL 5/S-512 FOR OPENINGS GREATER THAN 4'-0" WIDE.
10. OPEN WEB STEEL JOISTS AND JOIST GIRDERS SHALL BE DESIGNED BY THE MANUFACTURER TO SUPPORT THE MECHANICAL AND LATERAL LOADS SHOWN ON THE ROOF FRAMING PLANS IN ADDITION TO THE UNIFORM AND POINT LOADS SHOWN.
11. JOIST BRIDGING SHOWN ON PLANS IS FOR REPRESENTATION ONLY: ACTUAL SIZE, QUANTITY, AND LOCATION WILL BE DETERMINED BY THE JOIST SUPPLIER PER 'SJI' REQUIREMENTS. ALL BRIDGING AND BRIDGING ANCHORS NEED TO BE IN PLACE BEFORE APPLYING ANY LOADS. WHERE SKYLIGHT OR MECHANICAL UNITS/DUCTS INTERRUPT HORIZONTAL BRIDGING, PROVIDE CROSS BRIDGING AT JOIST SPACES ON EACH SIDE OF THE OPENING. WHERE DIAGONAL BRIDGING CONFLICTS WITH MECHANICAL DUCTS, REMOVE DIAGONAL BRIDGING AND REPLACE WITH HORIZONTAL BRIDGING AFTER ROOF DECK IS IN PLACE.
12. JOIST DESIGNER SHALL DESIGN JOISTS AND SUPPLY ADDITIONAL BRIDGING AS REQUIRED FOR UPLIFT DUE TO WIND. ASSUME:
    DEAD LOAD = 12psf WIND UPLIFT = 20psf (GROSS)
    NO 1/3 STRESS INCREASE ALLOWED.
13. SEE ARCHITECTURAL PLANS FOR DIMENSIONS TO ALL STEEL COLUMNS.

"Engineering Results"
BHB Consulting Engineers
A Professional Corporation
2766 South Main Street
Salt Lake City, Utah 84115
Phone: 801.355.5656
Fax: 801.355.5950
Email: bhb@bhbengineers.com

revisions:

num	description	date
1		
2		
3		
4		
5		
6		
7		

date: 15 FEB 2012
project number: 11501
drawn by: Author
checked by: Checker
project status: CONSTRUCTION DOCUMENTS

current as of: 2/15/2012 10:38:34 AM
original drawing is 24" x 36"
file path: C:\Users\jmorgan\Documents\temp\11501_SMITH_Morgan.rvt

The drawings, specifications, designs, and construction details contained herein, regardless of the extent to which they are incorporated into the final project, are the property of BHB Consulting Engineers. They are to be used only in accordance with and subject to the terms and conditions of our agreement with this notice. They are intended for use only for the project specified and are to be used for no other purpose. Any other use, including but not limited to reproduction or modification, is prohibited without our prior written consent. Reproduced, photographic, modified, published, uploaded, transmitted, distributed, sold, rented, leased, or otherwise used without our prior written consent is prohibited and may be subject to civil and criminal prosecution.

COPYRIGHT © 2009 BABCOCK DESIGN GROUP

stamp:

VERNAL FIELD HOUSE OF NATURAL HISTORY MUSEUM-ADDITION

for:

UTAH STATE PARKS AND RECREATION/UINTAH COUNTY

470 EAST MAIN STRET VERNAL, UTAH 84078

www.babcockdesign.com

JWL + BDG Architecture

sheet title: ROOF FRAMING PLAN

sheet number: S-111

ORDINARY BRACED FRAME CONNECTION SCHEDULE

BRACE SIZE	WELD (A)	WELD (B)	WELD (C)	WELD (D)	WELD (E)	GUSSET PLATE	COMMENTS
HSS6x6x1/4	1/4" x 8"					1/2"	

BRACED FRAME NOTES:
1. SHOP DRAWINGS SHALL DIMENSION BOTH SET BACK DISTANCES FOR EACH GUSSET PLATE.
2. SET BACK DISTANCE INDICATES THE DISTANCE TO THE NEAREST STRUCTURAL ELEMENT; IT SHALL BE 2" FOR ALL BRACE SIZES.
3. SEE GENERAL STRUCTURAL NOTES FOR ADDITIONAL REQUIREMENTS.

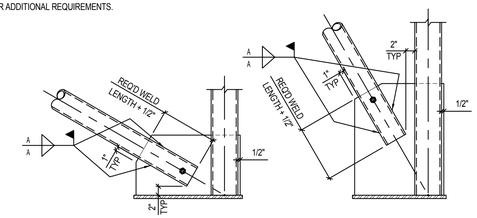

1 BRACED FRAME CONNECTION SCHEDULE

NO SCALE

BRACED FRAME STEEL COLUMN SCHEDULE

MARK	SIZE	STEEL BASE PLATE	STEEL CAP PLATE	BRACE SIZE	ANCHOR BOLTS	SHEAR LUG
BFC-6A	HSS6x6x1/4	1" (BFSBP-1)	1/2" (BFSCP-1)	HSS6x6x1/4	1.1/4"DIA	1"X2.1/2"x1'-0"
BFC-6B	HSS6x6x1/4	1" (BFSBP-1)	1/2" (BFSCP-2)	HSS6x6x1/4	1.1/4"DIA	1"X2.1/2"x1'-0"
BFC-6C	HSS6x6x1/4	1" (BFSBP-2)	1/2" COVER PLATE	HSS6x6x1/4	1.1/4"DIA	

BRACED FRAME STEEL COLUMN NOTES:
1. UNLESS NOTED OTHERWISE, ALL BRACED FRAME COLUMNS SHALL BE INSTALLED WITH NOTED ANCHOR BOLTS AND 3/8"x3"x0'-3" PLATE WASHER WITH HEAVY HEX NUT ABOVE AND BELOW PLATE WASHER. PROJECT ANCHOR BOLTS 3" MINIMUM ABOVE THE TOP OF THE BASE PLATE AND EXTEND ANCHOR RODS THROUGH CONCRETE PIER (WHERE OCCURS) TO THE BOTTOM OF THE FOOTING AND OVER-EXCAVATE UNDER FOOTING TO ALLOW 3" COVER, SEE _/S-201. ALL BOLTS SHALL BE INSTALLED WITH HARDENED WASHERS BENEATH THE NUT. ANY BOLT HOLES LARGER THAN THE BOLT DIAMETER PLUS 5/16" SHALL HAVE 5/16" PLATE WASHERS INSTALLED BENEATH THE HARDENED WASHERS.
2. ALL CAP PLATE BOLTS SHALL BE 3/4" □ A325N BOLTS, TYPICAL UNLESS NOTED OTHERWISE.
3. ANCHOR BOLTS SHALL NOT BE WELDED (INCLUDING TACK WELDS).
4. ALL ANCHOR BOLTS EMBEDDED IN CONCRETE SHALL BE INSTALLED WITHIN CAGE OF CONCRETE PIER REINFORCING.
5. ALL SHEAR WALLS SHALL BE CONNECTED TO BASE PLATES WITH COMPLETE JOINT PENETRATION WELD.
6. SEE GENERAL STRUCTURAL NOTES FOR ADDITIONAL REQUIREMENTS.

BRACED FRAME STEEL BASE PLATE TYPES:

BASE PLATE LEGEND
co = 1/2" MINIMUM
ed = 2" MINIMUM
bc = 3" MINIMUM

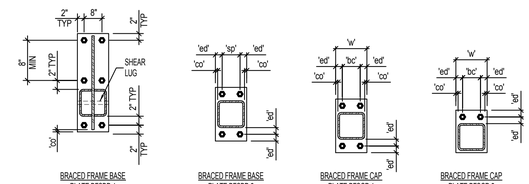

BRACED FRAME BASE PLATE BFSBP-1 | BRACED FRAME BASE PLATE BFSBP-2 | BRACED FRAME CAP PLATE BFSCP-1 | BRACED FRAME CAP PLATE BFSCP-2

2 BRACED FRAME STEEL COLUMN SCHEDULE

NO SCALE

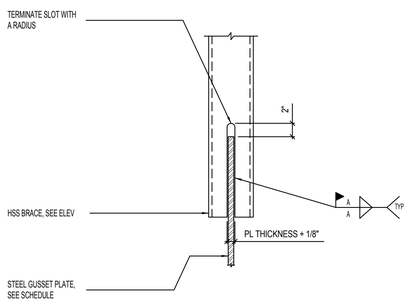

3 STEEL TUBE BRACE AT GUSSET PLATE

NO SCALE

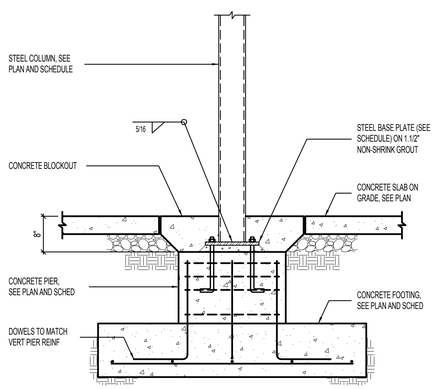

4 STEEL COLUMN BEARING AT CONCRETE PIER

NO SCALE

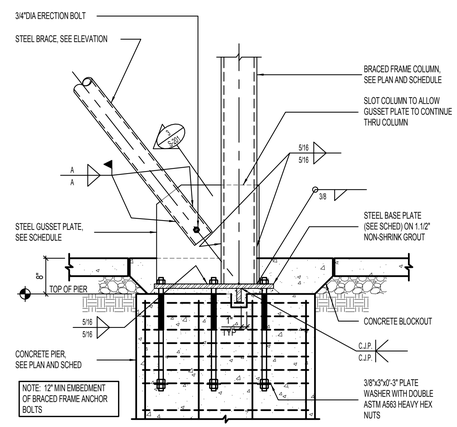

NOTE:
1. SLOT COLUMN TO ALLOW GUSSET PLATE TO CONTINUE THROUGH.
2. DECK NOT SHOWN IN THIS DETAIL.

5 TYPICAL BRACED FRAME CONNECTION ON CONCRETE PIER

SEE ELEVATION FOR BRACE SIZES; SEE 'BRACED FRAME SCHEDULE' FOR ADDITIONAL INFORMATION.

NO SCALE

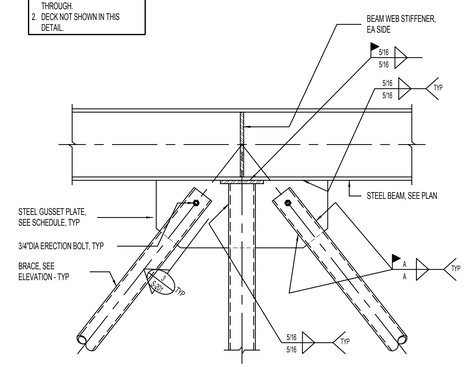

6 BRACED FRAME CONNECTION DETAIL AT ROOF BEAM

SEE ELEVATION FOR BRACE SIZES; SEE BRACED FRAME SCHEDULE FOR ADDITIONAL INFORMATION.

NO SCALE

"Engineering Results"
BHB Consulting Engineers
A Professional Corporation
2766 South Main Street
Salt Lake City, Utah 84115
Phone: 801.355.5656
Fax: 801.355.5950
Email: bhb@bhbengineers.com

date:	15 FEB 2012
project number:	11501
drawn by:	Author
checked by:	Checker
project status:	CONSTRUCTION DOCUMENTS

current as of: 2/15/2012 10:38:58 AM
file path: C:\Users\jmorgan.bdg\AppData\Local\Temp\acpublish\11501_BARDL_Morgan.rvt
original drawing is 24" x 36"

revisions:

num	description	date

The drawings, specifications, details, and instructions herein contain all intellectual property and are the property of BABCOCK DESIGN GROUP and are protected by copyright and other intellectual property laws. Any use of the drawings, specifications, details, and instructions herein in accordance with this notice. They are made to you only for the projects specified and are to be used for the specified purpose and for no other purpose. Any other use, including but not limited to reproduction, modification, storage in a retrieval system or retransmission in any form or by any means, electronic, mechanical or otherwise, without prior written consent of BABCOCK DESIGN GROUP, is prohibited. COPYRIGHT © 2009 BABCOCK DESIGN GROUP, Inc.

JWL + BDG Architecture

stamp:

VERNAL FIELD HOUSE OF NATURAL HISTORY MUSEUM-ADDITION

for:

UTAH STATE PARKS AND RECREATION/UINTAH COUNTY

470 EAST MAIN STRET VERNAL, UTAH 84078

www.babcockdesign.com

sheet title:
TYPICAL BRACED FRAME DETAILS

sheet number:
S-201

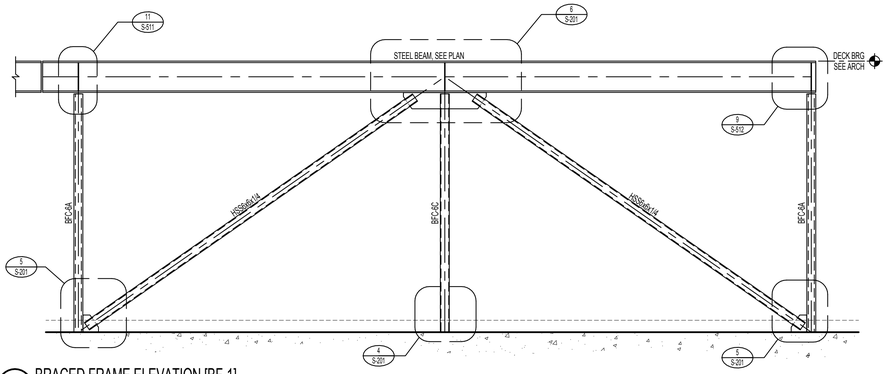

1 BRACED FRAME ELEVATION [BF-1]

NO SCALE

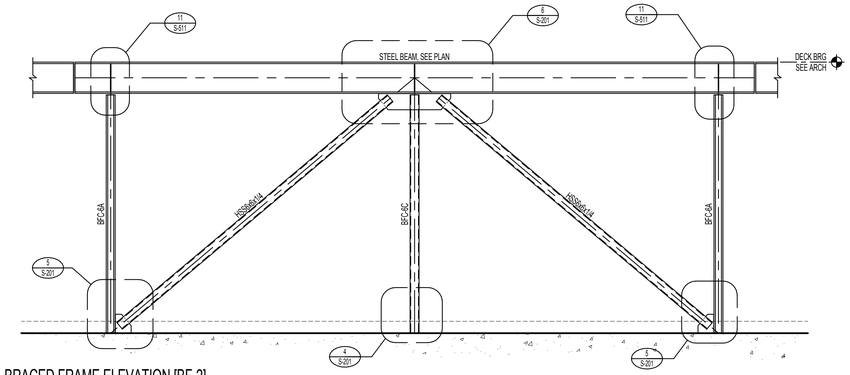

2 BRACED FRAME ELEVATION [BF-2]

NO SCALE

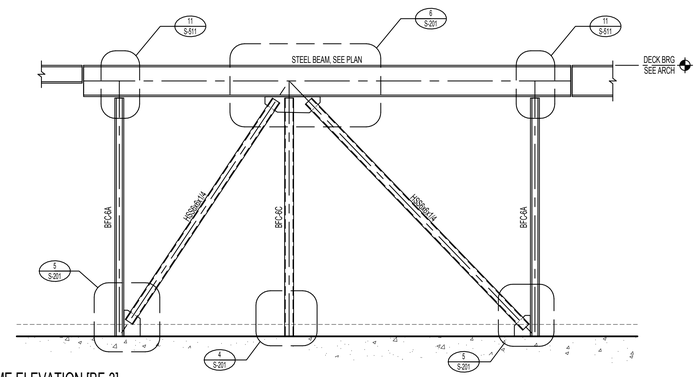

3 BRACED FRAME ELEVATION [BF-3]

NO SCALE

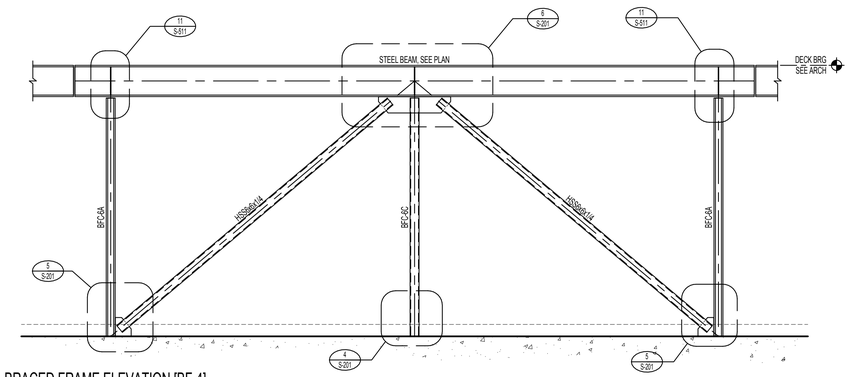

4 BRACED FRAME ELEVATION [BF-4]

NO SCALE

revisions:		
mark	description	date
△		
△		
△		
△		
△		
△		
△		

date:	15 FEB 2012
project number:	11501
drawn by:	Author
checked by:	Checker
project status:	CONSTRUCTION DOCUMENTS

current as of: 2/15/2012 10:38:38 AM original drawing is 24" x 36"
file path: C:\Users\morgan.hansen\AppData\Local\temp\acpublish\11501_BABCOCK\Morgan.rvt
Documents\Revits\11501_BABCOCK_Morgan.rvt

The drawings, specifications, sketches, and computer files contain the information, designs, and data which are the property of BHB Consulting Engineers. The information may be used only in accordance with this notice. They are intended for use only for the project specified and are to be used for the construction of that project only. Any other use, including but not limited to, copying, distributing, or creating derivative works, is prohibited without the express written consent of BHB Consulting Engineers. Any unauthorized use, copied, reproduced, photographed, modified, published, uploaded, transmitted, disclosed, sold, distributed, or used for any purpose other than the specified project is prohibited and may be subject to civil and criminal liability.
COPYRIGHT © 2009 BABCOCK DESIGN GROUP

JWL + BDG Architecture

stamp:

VERNAL FIELD HOUSE OF NATURAL HISTORY MUSEUM-ADDITION

for:

UTAH STATE PARKS AND RECREATION/UINTAH COUNTY

470 EAST MAIN STRET VERNAL, UTAH 84078

www.babcockdesign.com

sheet title:

BRACED FRAME ELEVATIONS

sheet number:

S-202

"Engineering Results"
BHB Consulting Engineers
A Professional Corporation
2766 South Main Street
Salt Lake City, Utah 84115
Phone: 801.355.5656
Fax: 801.355.5950
Email: bhb@bhbengineers.com

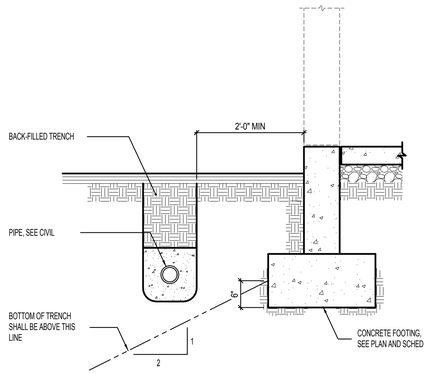

1 CONDITION AT PIPE PARALLEL TO CONCRETE FOOTING

NO SCALE

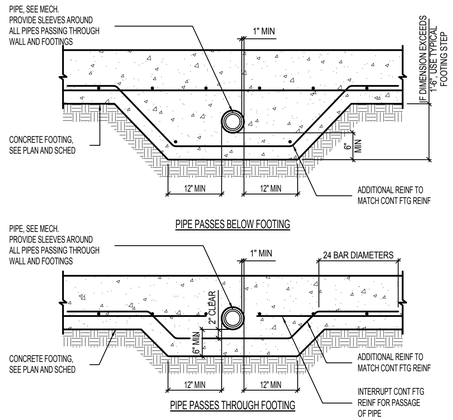

2 CONDITIONS AT PIPE PERPENDICULAR TO FOOTING

NO SCALE

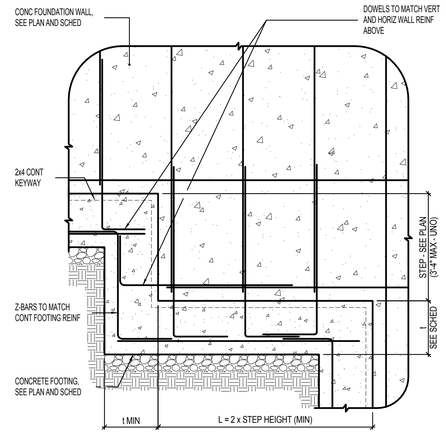

3 TYPICAL FOOTING STEP DETAIL

NO SCALE

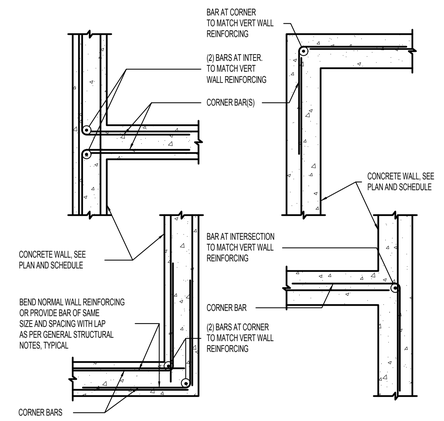

4 TYPICAL CORNER WALL REINFORCING AT CONCRETE WALLS [PLAN VIEW]

NO SCALE

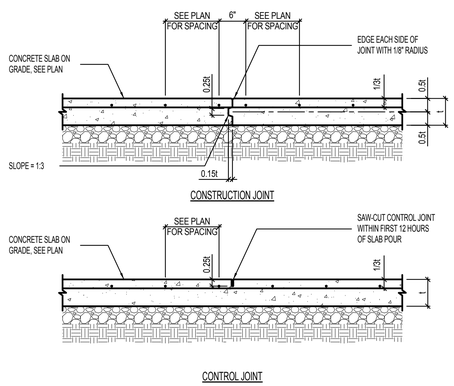

5 TYPICAL SLAB ON GRADE JOINT DETAILS

NO SCALE

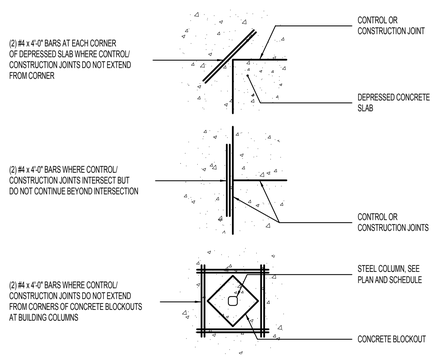

6 LOCATIONS REQUIRING ADDITIONAL SLAB REINFORCING [PLAN VIEW]

NO SCALE

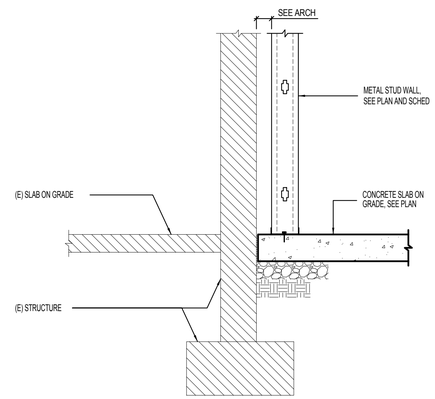

7 METAL STUD WALL AT EXISTING STRUCTURE

NO SCALE

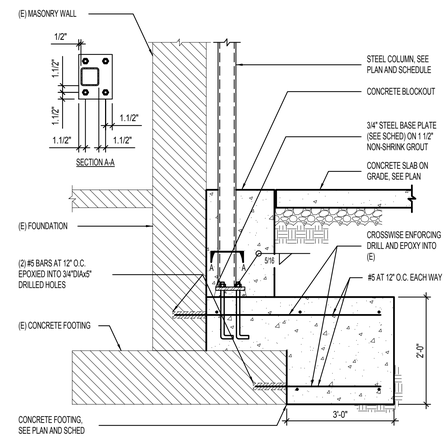

8 STEEL COLUMN AT EXISTING FOOTING

NO SCALE

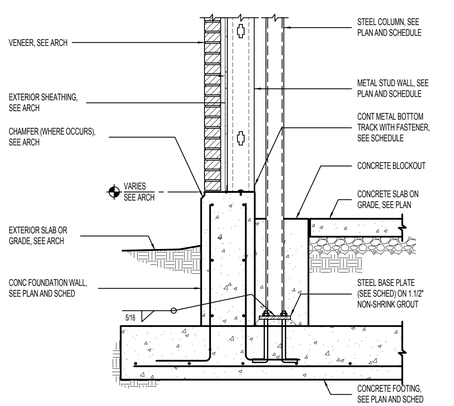

9 STEEL COLUMN AT EXTERIOR FOUNDATION WALL

NO SCALE

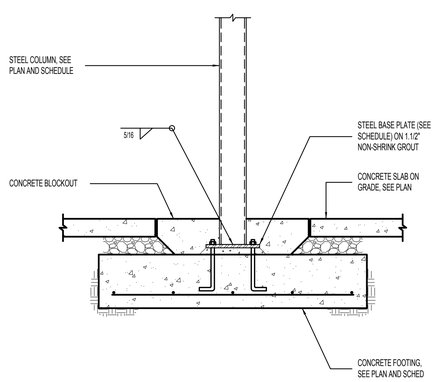

10 TYPICAL INTERIOR STEEL COLUMN TO FOOTING DETAIL

NO SCALE

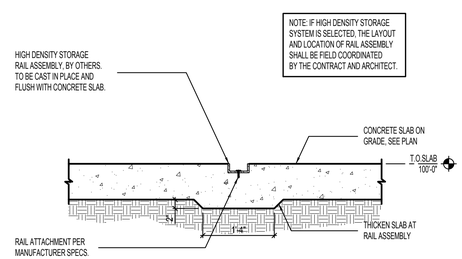

11 HIGH DENSITY STORAGE RAIL

NO SCALE

"Engineering Results"
BHB Consulting Engineers
A Professional Corporation
2766 South Main Street
Salt Lake City, Utah 84115
Phone: 801.355.5656
Fax: 801.355.5950
Email: bhb@bhbengineers.com

revisions: mark	description	date

date:	15 FEB 2012
project number:	11501
drawn by:	Author
checked by:	Checker
project status:	CONSTRUCTION DOCUMENTS

current as of: 2/15/2012 10:38:37 AM
original drawing is 24" x 36"
file path: C:\Users\Jeremy.Morgan\Documents\Revit\11501_SARTL_Morgan.rvt

The drawings, specifications, designs, and computer files herein are the property of the Babcock Design Group, Inc. and may not be used for any purpose not specifically agreed to in writing by the Babcock Design Group, Inc. in accordance with this notice. They are intended for use only for the projects specified and are to be used for the construction of those projects only by the parties specified and are to be used for no other purpose. Reproduction, publication, or any other use of these drawings and specifications without the written consent of the Babcock Design Group, Inc. is prohibited. Any unauthorized use is at the user's own risk and the Babcock Design Group, Inc. disclaims all liability for such use.

COPYRIGHT © 2009 BABCOCK DESIGN GROUP

VERNAL FIELD HOUSE OF NATURAL HISTORY MUSEUM-ADDITION

for:

UTAH STATE PARKS AND RECREATION/UINTAH COUNTY

470 EAST MAIN STRET VERNAL, UTAH 84078

www.babcockdesign.com

Stamp:

JWL + BDG Architecture

sheet title: FOUNDATION DETAILS

sheet number: S-501

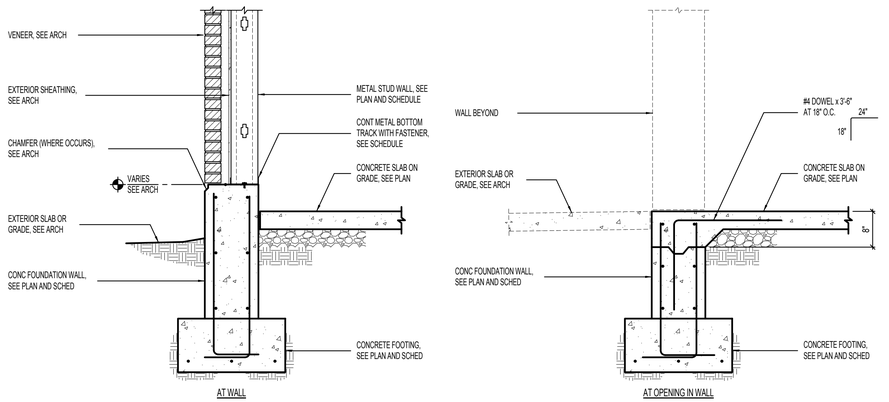

1 FOUNDATION WALL DETAIL AT METAL STUD WALL WITH VENEER

NO SCALE

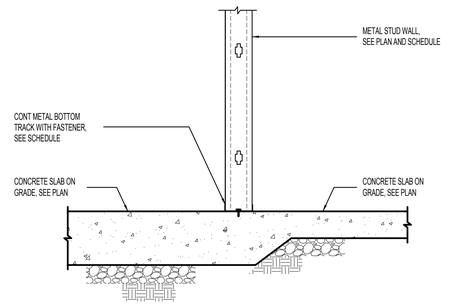

2 INTERIOR METAL STUD WALL

NO SCALE

"Engineering Results"
BHB Consulting Engineers
A Professional Corporation
2766 South Main Street
Salt Lake City, Utah 84115
Phone: 801.355.5656
Fax: 801.355.5950
Email: bhb@bhbengineers.com

revisions:		
num	description	date

date:	15 FEB 2012
project number:	11501
drawn by:	Author
checked by:	Checker
project status:	CONSTRUCTION DOCUMENTS

current as of: 2/15/2012 10:38:38 AM original drawing is 24" x 36"
file path: C:\Users\Morgan.Hansen\Desktop\temp\11501_SARTL_Morgan.rvt
Documents\Revits\11501_SARTL_Morgan.rvt

The drawings, specifications, designs, and intellectual properties herein are the exclusive property of BABCOCK DESIGN GROUP. They are intended for use only in the project specified and are to be used for the project only in accordance with this notice. They are intended for use only by the project specified and are to be used for no other purpose without the express written permission of BABCOCK DESIGN GROUP. Any other use, including but not limited to copied, reproduced, photographed, modified, published, uploaded, transmitted, distributed, sold, distributed, or exploited in any way without express written permission of BABCOCK DESIGN GROUP is strictly prohibited.
COPYRIGHT © 2009 BABCOCK DESIGN GROUP
Babcock Design Group, Inc.

JWL + BDG Architecture

VERNAL FIELD HOUSE OF NATURAL HISTORY MUSEUM-ADDITION

for:

UTAH STATE PARKS AND RECREATION/UINTAH COUNTY

470 EAST MAIN STRET VERNAL, UTAH 84078

www.babcockdesign.com

Stamp:

sheet title:
FOOTING AND FOUNDATION DETAILS

sheet number:
S-502

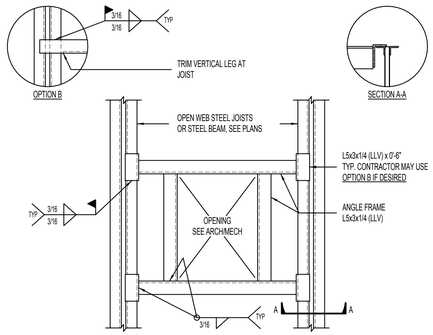

NOTES:
1. SEE DETAIL 3/S521 FOR OPENINGS LESS THAN 12" IN DIAMETER.
2. PROVIDE EXTRA WEB MEMBERS PER DETAIL 4/S521 FOR OPENINGS 6'-0" AND LARGER.
3. SEE TYPICAL ROOF TOP MECHANICAL UNIT SUPPORT DETAIL(S) FOR FRAMES UNDER MECHANICAL UNITS.
4. ROOF DECK TO BE WELDED TO ANGLE FRAMING.

1 TYPICAL ROOF OPENING DETAIL [PLAN VIEW]
NO SCALE

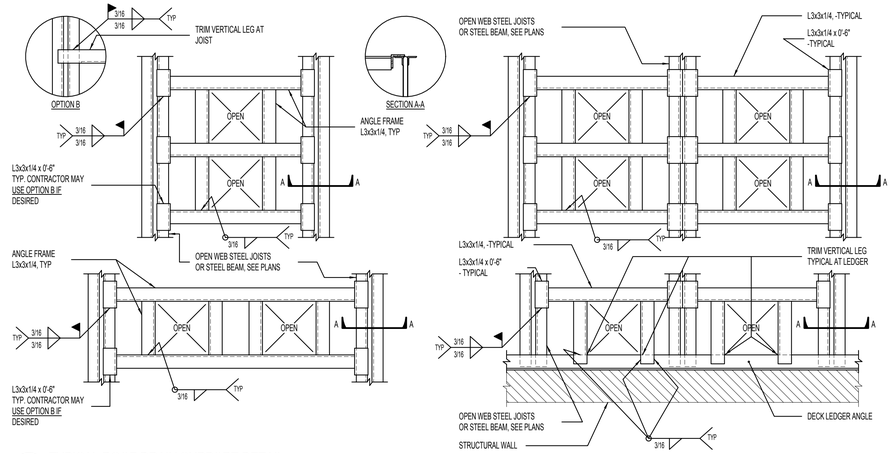

2 TYPICAL ROOF DRAIN SUPPORT DETAIL [PLAN VIEW]
NO SCALE

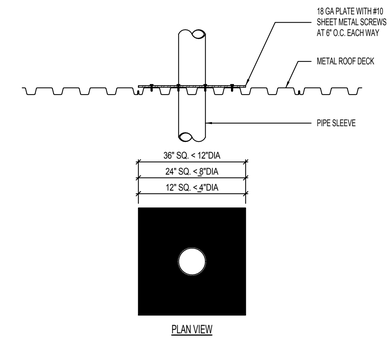

3 TYPICAL PIPE SLEEVE THROUGH ROOF DECK
NO SCALE

NOTE: WHERE CONCENTRATED LOADS ON OPEN WEB JOISTS ARE LOCATED MORE THAN 6" FROM THE PANEL WORK POINTS AT EITHER THE TOP OR BOTTOM CHORD, THE CONTRACTOR SHALL INSTALL ADDITIONAL DIAGONAL WEB MEMBERS AT THE LOCATION OF THE CONCENTRATED LOAD.

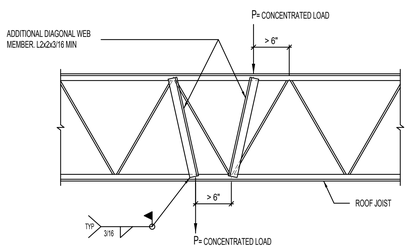

4 TYPICAL JOIST REINFORCING DETAIL FOR LOADS GREATER THAN 250 POUNDS
NO SCALE

NOTES:
1. WHERE THE MECHANICAL UNIT WEIGHS LESS THAN 700 lbs, THE L6x4 SUPPORT ANGLES MAY BE CHANGED TO L5x3x1/4.
2. SOLID BLOCK THE FLUTES OF THE STEEL DECK UNDER THE CURB OF THE MECHANICAL UNIT. THIS MAY BE DONE WITH A HSS1.1/2x1.1/2x3/16 x 0'-4" TACK WELDED TO THE STEEL DECK OR WITH SOLID BLOCKING CONNECTED TO THE STEEL DECK.
3. ROOF DECK TO BE WELDED TO ANGLE FRAMING.

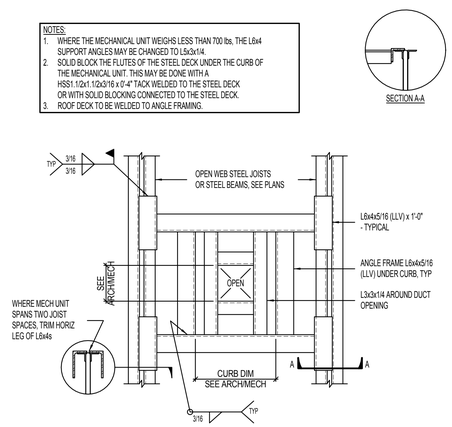

5 TYPICAL ROOF TOP MECHANICAL UNIT SUPPORT DETAIL [PLAN VIEW]
NO SCALE

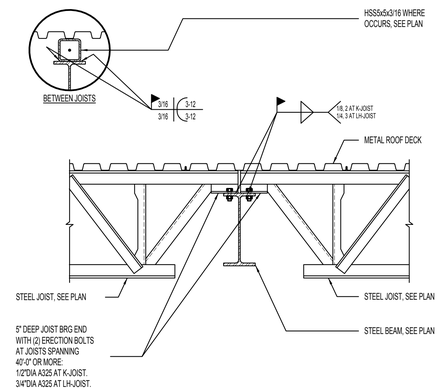

6 TYPICAL JOIST BEARING AT STEEL BEAM
NO SCALE

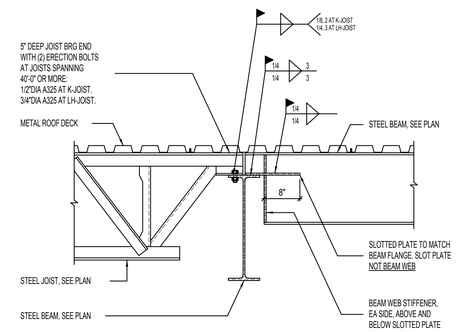

7 TYPICAL JOIST/BEAM BEARING AT STEEL BEAM
NO SCALE

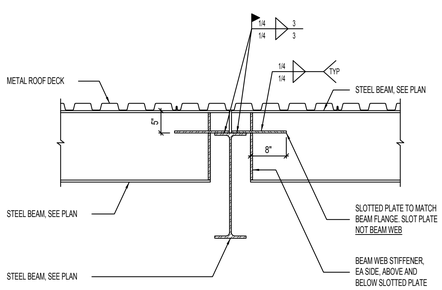

8 TYPICAL STEEL BEAMS BEARING AT STEEL BEAM
NO SCALE

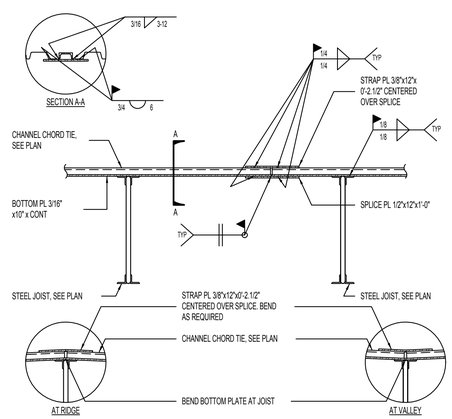

9 TYPICAL CHANNEL CHORD TIE DETAIL
NO SCALE

NOTE: DECK NOT SHOWN IN THIS DETAIL.

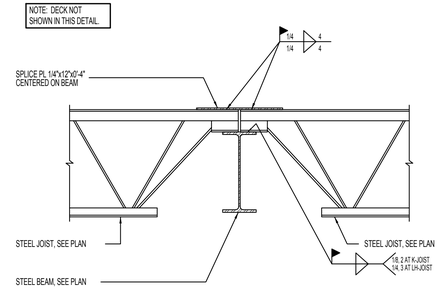

10 TYPICAL JOIST (5" BEARING ENDS) CHORD TIE/ DRAG STRUT DETAIL
NO SCALE

NOTE: IF ANY BOLT HOLE DOES NOT ALIGN, FIELD WELD BEAM TO CAP PLATE WITH A 1/4" x 3" FILLET WELD ON BOTH SIDES.

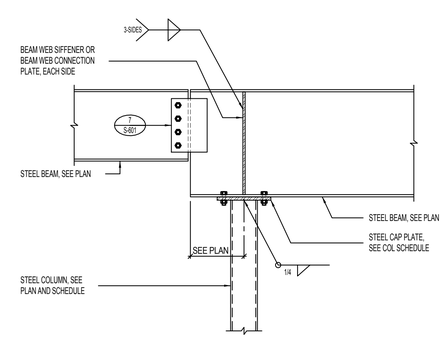

11 TYPICAL DROP-IN STEEL BEAM CONNECTION AT STEEL COLUMN
NO SCALE

"Engineering Results"
BHB Consulting Engineers
A Professional Corporation
2766 South Main Street
Salt Lake City, Utah 84115
Phone: 801.355.5656
Fax: 801.355.5950
Email: bhb@bhbengineers.com

revisions:		
num	description	date

date:	15 FEB 2012
project number:	11501
drawn by:	Author
checked by:	Checker
project status:	CONSTRUCTION DOCUMENTS

current as of: 2/15/2012 10:38:39 AM
file path: original drawing is 24" x 36"
Documents\Revit\Local\11501_SAMPL_Morgan.rvt

The drawings, specifications, designs, and intellectual properties herein are the property of BDG Group, Inc. and may not be used, reproduced, or transmitted in any form or by any means without the express written permission of BDG Group, Inc. and in accordance with this notice. They are intended for use only for the projects specified and are to be used for the specified purposes only. Any other use, reproduction, or transmittal is prohibited. Any drawings, specifications, designs, and intellectual properties created, reproduced, photographed, modified, published, uploaded, transmitted, displayed, sold, distributed, or otherwise used without express written permission of BDG Group, Inc. violate the copyright laws and other laws and are prohibited. COPYRIGHT © 2009 BABCOCK DESIGN GROUP

JWL + BDG Architecture

VERNAL FIELD HOUSE OF NATURAL HISTORY MUSEUM-ADDITION

for:

UTAH STATE PARKS AND RECREATION/UINTAH COUNTY

470 EAST MAIN STRET VERNAL, UTAH 84078

www.babcockdesign.com

stamp:

sheet title: ROOF FRAMING DETAILS

sheet number: S-511

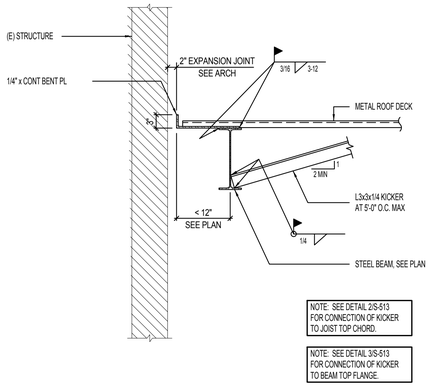

1 DECK EDGE DETAIL [OVERHANG < 12"] NO SCALE

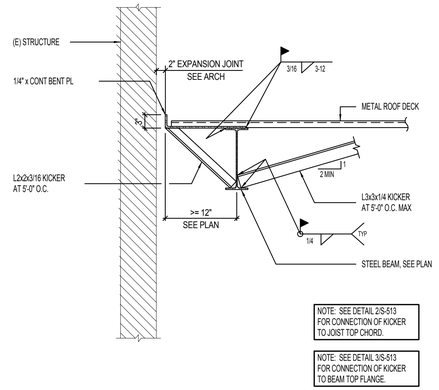

2 DECK EDGE DETAIL [OVERHANG >= 12"] NO SCALE

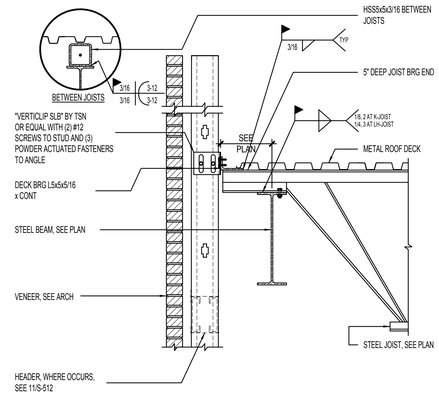

3 JOIST BEARING AT STEEL BEAM NO SCALE

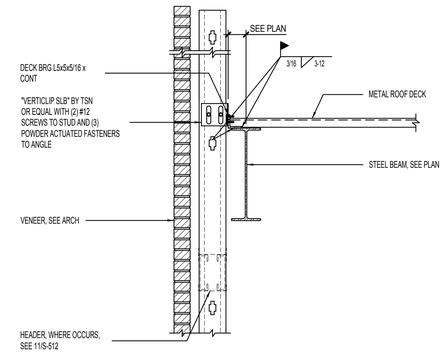

4 TYPICAL EXTERIOR DECK EDGE DETAIL WITH VENEER NO SCALE

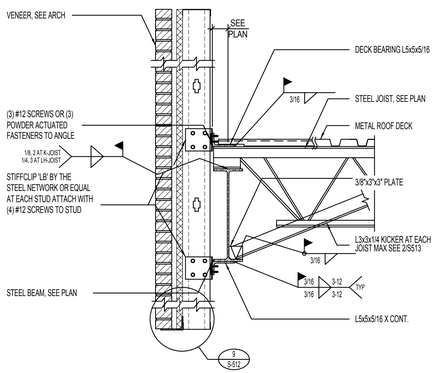

5 VENEER OVER METAL STUD AT WALL OPENING NO SCALE

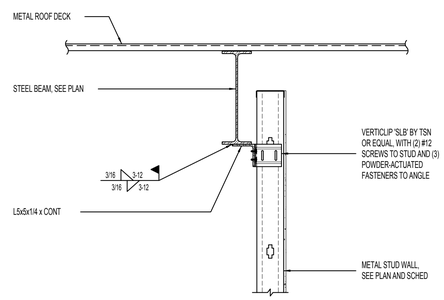

6 DECK BEARING AT STEEL BEAM NO SCALE

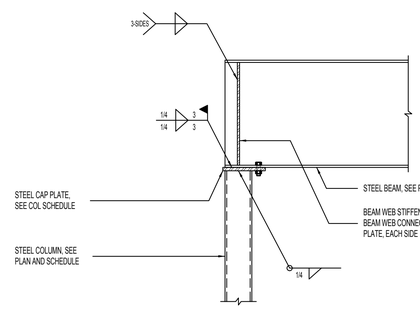

7 TYPICAL STEEL BEAM BEARING AT STEEL COLUMN NO SCALE

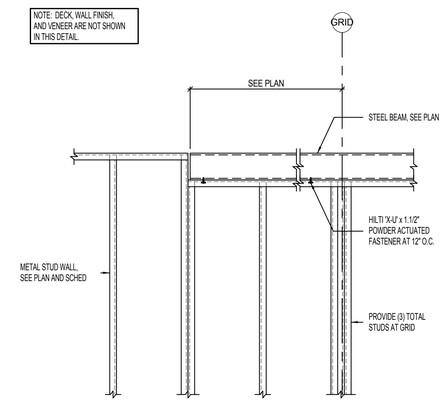

8 METAL STUD WALL NO SCALE

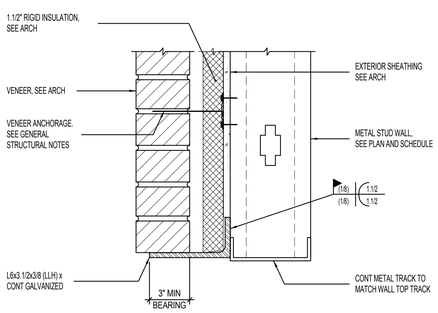

9 TYPICAL BRICK LEDGER AT METAL STUD LINTEL NO SCALE

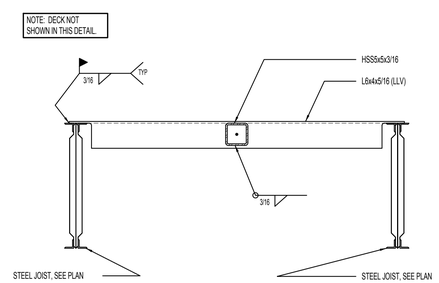

10 STEEL TUBE/ANGLE BRACE DETAIL NO SCALE

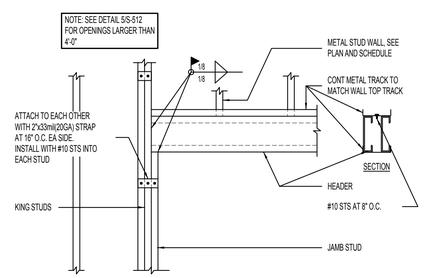

11 HEADER DETAIL FOR 6" METAL STUD WALLS NO SCALE

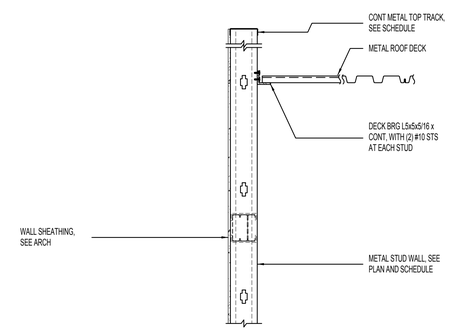

12 DECK BEARING AT METAL STUD WALL NO SCALE

"Engineering Results"
BHB Consulting Engineers
A Professional Corporation
2766 South Main Street
Salt Lake City, Utah 84115
Phone: 801.355.5656
Fax: 801.355.5950
Email: bhb@bhbengineers.com

revisions:		
num	description	date

date: 15 FEB 2012
project number: 11501
drawn by: Author
checked by: Checker
project status: CONSTRUCTION DOCUMENTS
current as of: 2/15/2012 10:38:47 AM
file path: C:\Users\jeremy.mcneil\AppData\Local\temp\acpublish_Documents\Revit\11501_SARTL_Morgan.rvt
original drawing is 24" x 36"

The drawings, specifications, details, and computer files herein are the property of BDG Design Group, Inc. and are protected by copyright. Any reproduction, publication, or use of the drawings, specifications, details, and computer files herein without the express written consent of BDG Design Group, Inc. is prohibited. Any use by others for purposes other than those for which the drawings, specifications, details, and computer files were prepared, or any other use not in accordance with this notice, They are made available to others only for the purpose specified and are to be treated by the recipient as confidential and proprietary information. Any other use, publication, or reproduction is prohibited. Drawings, specifications, details, and computer files are not to be used for any other purpose than that for which they were prepared without the express written consent of BDG Design Group, Inc.
COPYRIGHT © 2009 BABCOCK DESIGN GROUP

JWL + BDG Architecture

VERNAL FIELD HOUSE OF NATURAL HISTORY MUSEUM-ADDITION
for:
UTAH STATE PARKS AND RECREATION/UINTAH COUNTY
470 EAST MAIN STRET VERNAL, UTAH 84078

www.babcockdesign.com

sheet title: ROOF FRAMING DETAILS

sheet number: S-512

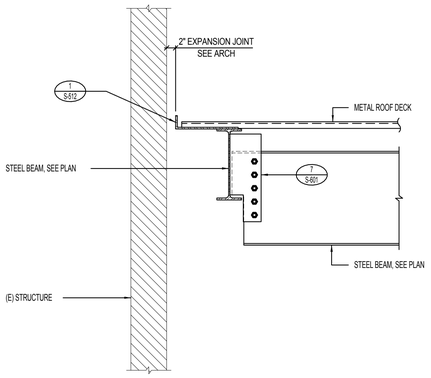

1 ROOF BEAM

NO SCALE

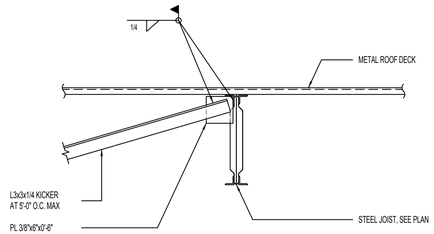

2 KICKER DETAIL AT STEEL JOIST

NO SCALE

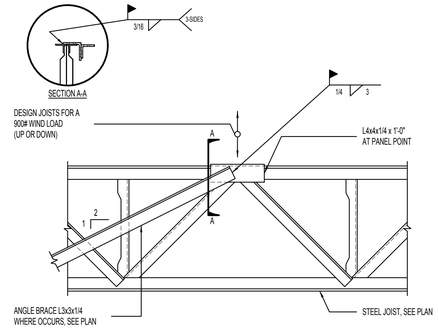

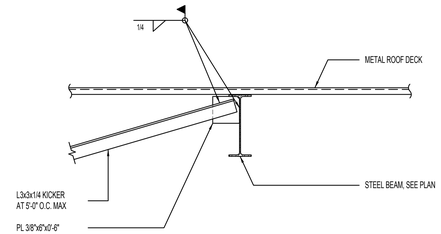

3 KICKER DETAIL AT STEEL BEAM

NO SCALE

"Engineering Results"
BHB Consulting Engineers
A Professional Corporation
2766 South Main Street
Salt Lake City, Utah 84115
Phone: 801.355.5656
Fax: 801.355.5950
Email: bhb@bhbengineers.com

JWL + BDG Architecture

revisions:		
num	description	date

date:	15 FEB 2012
project number:	11501
drawn by:	Author
checked by:	Checker
project status:	CONSTRUCTION DOCUMENTS

current as of: 2/15/2012 10:38:47 AM original drawing is 24" x 36"
file path: C:\Users\jmorgan\Desktop\temp\BHB Documents\Revit\Local\15501_SARTL_Morgan.rvt

The drawings, specifications, details, and construction techniques shown on this drawing are the property of BHB Consulting Engineers and may not be used for any purpose not specifically agreed to in writing by BHB Consulting Engineers in accordance with this notice. They are intended for use only for the project specified and are to be used for the construction of that project only in accordance with the agreed upon terms and conditions. Any other use, including but not limited to copying, reproduction, distribution, modified, published, uploaded, transmitted, displayed, sold, distributed, or exploited in any way without the express written consent of BHB Consulting Engineers is strictly prohibited.
COPYRIGHT © 2009 BABCOCK DESIGN GROUP

VERNAL FIELD HOUSE OF NATURAL HISTORY MUSEUM-ADDITION

for:

UTAH STATE PARKS AND RECREATION/UINTAH COUNTY

470 EAST MAIN STRET VERNAL, UTAH 84078

www.babcockdesign.com

Stamp:

sheet title: ROOF FRAMING DETAILS

sheet number: S-513

CONCRETE FOOTING SCHEDULE

MARK	WIDTH	LENGTH	DEPTH	REINFORCING CROSSWISE No.	SIZE	LENGTH	SPACING	REINFORCING LENGTHWISE No.	SIZE	LENGTH	SPACING	COMMENTS
FC1.5	1'-6"	CONT	12"	-	-	-	-	2	#5	CONT	EQ	.
FC2.0	2'-0"	CONT	12"	-	#5	1'-6"	14"	3	#5	CONT	EQ	BOTTOM REINFORCING
								2	#5	CONT	EQ	TOP REINFORCING
FC3.0	3'-0"	CONT	12"	-	#5	2'-6"	14"	3	#5	CONT	EQ	BOTTOM REINFORCING
								3	#5	CONT	EQ	TOP REINFORCING
FS3.0	3'-0"	3'-0"	12"	3	#5	2'-6"	EQ	3	#5	2'-6"	EQ	
FS3.5	3'-6"	3'-6"	12"	3	#5	3'-0"	EQ	3	#5	3'-0"	EQ	
FS4.0	4'-0"	4'-0"	12"	4	#5	3'-6"	EQ	4	#5	3'-6"	EQ	
FS5.0	5'-0"	5'-0"	13"	5	#5	4'-6"	EQ	5	#5	4'-6"	EQ	
FS5.5	5'-6"	5'-6"	14"	6	#5	5'-0"	EQ	6	#5	5'-0"	EQ	
FS6.0	6'-0"	6'-0"	15"	7	#5	5'-6"	EQ	7	#5	5'-6"	EQ	BOTTOM REINFORCING
				6	#5	5'-6"	EQ	6	#5	5'-6"	EQ	TOP REINFORCING
FR6x36	6'-0"	36'-0"	14"	46	#5	5'-6"	EQ	8	#6	35'-6"	EQ	BOTTOM REINFORCING
				24	#4	5'-6"	EQ	5	#5	35'-6"	EQ	TOP REINFORCING

CONCRETE FOOTING NOTES:
1. PLACE ALL FOOTING REINFORCING IN THE BOTTOM OF THE FOOTING WITH 3" CLEAR CONCRETE COVER (UNO).
2. TOP REINFORCING, WHERE OCCURS, SHALL BE PLACED IN THE TOP OF THE FOOTING WITH 2" MINIMUM CONCRETE COVER.
3. IF FOOTINGS ARE EARTH-FORMED, FOOTINGS SHALL BE 6" LONGER AND WIDER THAN SCHEDULED.
4. SEE GENERAL STRUCTURAL NOTES FOR ADDITIONAL REQUIREMENTS.
5. SOME SCHEDULED FOOTINGS MAY NOT BE USED, SEE FOOTING AND FOUNDATION PLAN FOR FOOTING MARKS.

1 CONCRETE FOOTING SCHEDULE
NO SCALE

SCHED_CONC_FTG-C3000-S3000

CONCRETE PIER SCHEDULE

MARK	PIER SIZE	REINFORCING VERTICAL	REINFORCING TIES	TYPE	COMMENTS
CP-36A	36" x 16"	(10) #6	(2) #3 AT 8" O.C.	A	.
CP-36B	36" x 36"	(16) #6	(3) #3 AT 8" O.C.	B	

CONCRETE PIER NOTES:
1. INSTALL (3) SETS OF TIES WITHIN TOP 5" OF ALL PIERS (UNO).
2. RUN HORIZONTAL CONCRETE WALL REINFORCING CONTINUOUS THROUGH PIER WHEN PIER IS POURED MONOLITHICALLY WITH CONCRETE WALL.
3. SEE GENERAL STRUCTURAL NOTES FOR ADDITIONAL REQUIREMENTS.

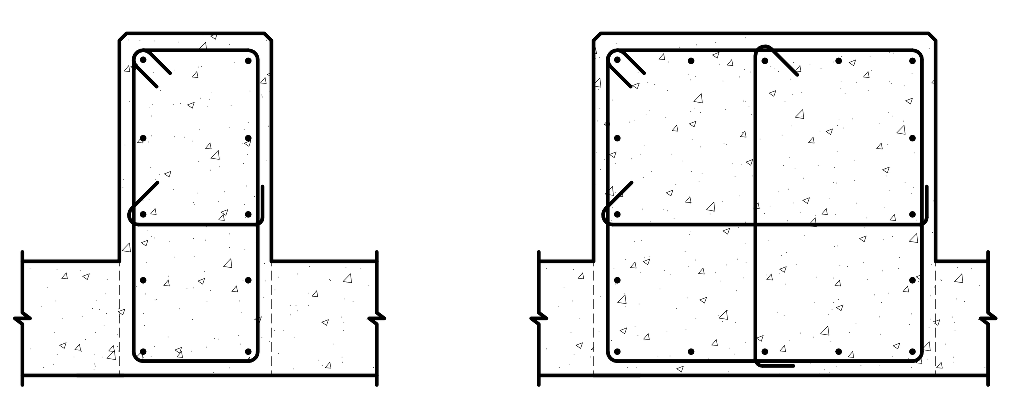

2 CONCRETE PIER SCHEDULE
NO SCALE

SCHED_CONC_PIER-01

CONCRETE WALL SCHEDULE

MARK	THICKNESS	REINFORCING VERTICAL	REINFORCING HORIZONTAL	REINFORCING TOP AND BOTTOM	WALL TYPE	COMMENTS
CW-12A	1'-0"	#4 AT 18" O.C. E.F.	#4 AT 16" O.C. E.F.	(2) #4	C	.
CW-24A	2'-0"	#4 AT 9" O.C. E.F.	#4 AT 8" O.C. E.F.	(2) #4	C	

CONCRETE FOUNDATION WALL NOTES:
1. SEE GENERAL STRUCTURAL NOTES FOR ADDITIONAL REQUIREMENTS.
2. CONCRETE FOUNDATION WALLS NOT DESIGNATED ON PLANS SHALL BE REINFORCED AS FOLLOWS:

ABBREVIATIONS:
E.F. EACH FACE
I.F. INSIDE FACE
O.F. OUTSIDE FACE

THICKNESS	VERTICAL REINFORCING	HORIZONTAL REINFORCING
6"	#4 BARS AT 18" O.C.	#4 BARS AT 16" O.C.
8"	#4 BARS AT 18" O.C.	#4 BARS AT 12" O.C.
10"	#4 BARS AT 16" O.C.	#5 BARS AT 15" O.C.
12"	#4 BARS AT 18" O.C. E.F.	#4 BARS AT 16" O.C. E.F.

WALL REINFORCING PLACEMENT TYPES:

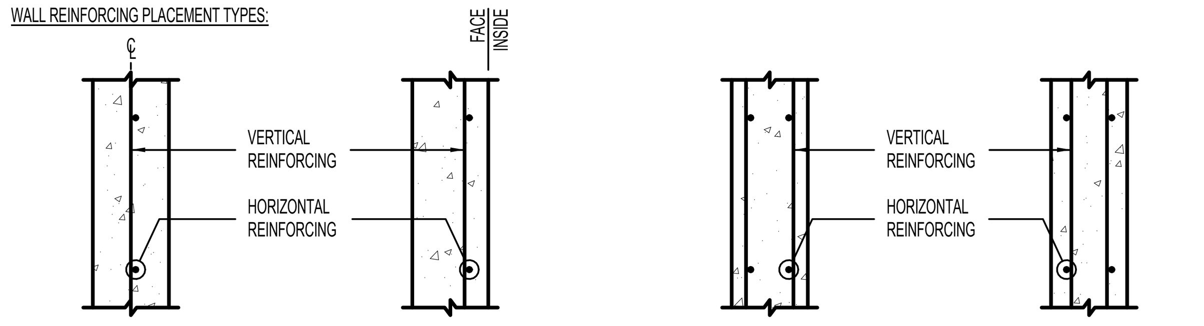

3 CONCRETE WALL SCHEDULE
NO SCALE

CONCRETE REINFORCING BAR LAP SPLICE SCHEDULE

BAR SIZE	f'c = 3000psi REGULAR CLASS A	B	TOP CLASS A	B	f'c = 4000psi & f'c = 4500 psi REGULAR CLASS A	B	TOP CLASS A	B	f'c = 5000psi REGULAR CLASS A	B	TOP CLASS A	B	f'c = 6000psi REGULAR CLASS A	B	TOP CLASS A	B
#3	13"	17"	17"	21"	12"	16"	16"	21"	12"	16"	16"	21"	12"	16"	16"	21"
#4	17"	22"	22"	28"	15"	19"	19"	25"	13"	17"	17"	22"	12"	16"	16"	21"
#5	21"	27"	27"	35"	18"	24"	24"	31"	16"	21"	21"	27"	15"	19"	19"	25"
#6	27"	36"	36"	46"	24"	31"	31"	40"	21"	28"	28"	36"	20"	25"	25"	33"
#7	37"	48"	48"	63"	32"	42"	42"	54"	29"	38"	38"	49"	27"	34"	34"	44"
#8	49"	64"	64"	82"	42"	55"	55"	71"	38"	49"	49"	64"	35"	45"	45"	58"
#9	62"	80"	80"	104"	54"	70"	70"	90"	48"	62"	62"	81"	44"	57"	57"	74"
#10	78"	102"	102"	132"	68"	88"	88"	115"	61"	79"	79"	102"	56"	72"	72"	94"
#11	96"	125"	125"	162"	83"	108"	108"	141"	76"	97"	97"	126"	68"	88"	88"	115"

CONCRETE REINFORCING BAR LAP SPLICE NOTES:
1. THIS SCHEDULE SHALL BE USED FOR ALL BAR SPLICES IN CONCRETE WALLS, UNLESS NOTED OTHERWISE.
2. CLASS 'A' SPLICES MAY BE USED ONLY IN CASES WHERE 50% OR LESS OF THE BARS ARE SPLICED WITHIN THE LAP SPLICE LENGTH.
3. CLASS 'B' SPLICES SHALL BE USED FOR ALL SPLICES UNLESS THE REQUIREMENTS OF NOTE No. 2 ABOVE ARE MET.
4. TIES AND STIRRUPS SHALL NOT BE SPLICED.
5. SPLICES FOR BUNDLED BARS:
   a. FOR BUNDLED BARS OF THREE OR LESS, LAP SPLICE LENGTHS SHALL BE MULTIPLIED BY 1.2.
   b. FOR BUNDLED BARS OF FOUR OR MORE, LAP SPLICE LENGTHS SHALL BE MULTIPLIED BY 1.33.
   c. INDIVIDUAL BAR SPLICES WITHIN A BUNDLE SHALL NOT OVERLAP.
   d. ENTIRE BUNDLES SHALL NOT BE LAP SPLICED.
6. FOR ALL LIGHTWEIGHT CONCRETE, LAP LENGTHS SHALL BE MULTIPLIED BY 1.3.
7. FOR ALL EPOXY COATED BARS, LAP LENGTHS SHALL BE MULTIPLIED BY 1.3 FOR TOP BARS AND 1.5 FOR REGULAR BARS.
8. TOP BARS ARE CLASSIFIED AS HORIZONTAL BARS WHERE 12", OR MORE, OF FRESH CONCRETE IS CAST BELOW THE REINFORCING BAR.
9. SEE GENERAL STRUCTURAL NOTES FOR ADDITIONAL REQUIREMENTS.

4 CONCRETE REINFORCING BAR LAP SPLICE SCHEDULE
NO SCALE

SCHED_CONC_REINF-01

EPOXY DOWEL EMBED SCHEDULE

DOWEL SIZE	MINIMUM EMBEDMENT INTO EXISTING CONCRETE
#4	6.1/2"
#5	7.1/2"
#6	10"
#7	1'-1"
#8	1'-4"

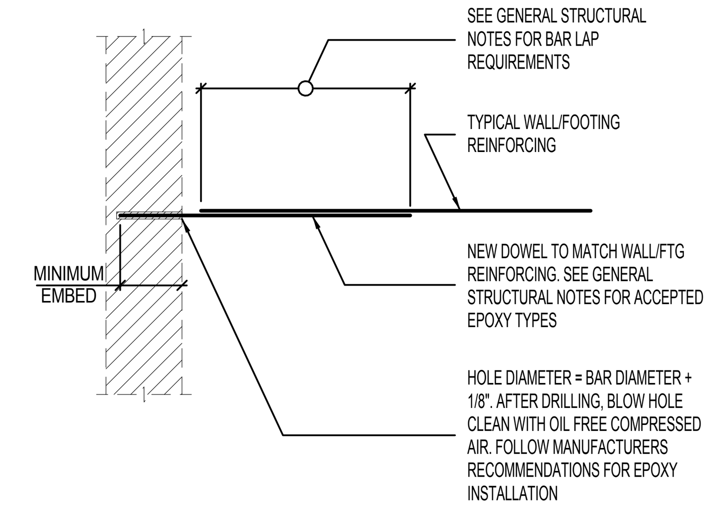

5 EPOXY DOWEL EMBED SCHEDULE
NO SCALE

SCHED_CONC_EPOXY-01

STEEL COLUMN SCHEDULE

MARK	SIZE	STEEL BASE PLATE	STEEL CAP PLATE	COMMENTS
SC-6A	HSS6x6x3/16	3/4" (SBP-1)	1/2" (SCP-1)	.
SC-6B	HSS6x6x3/16	3/4" (SBP-2)	1/2" (SCP-1)	
SC-6C	HSS6x6x3/16	3/4" (SBP-3)	1/2" (SCP-1)	
SC-6D	HSS6x6x3/16	3/4" (SBP-3)	1/2" (SCP-2)	
SC-6E	HSS6x6x5/16	3/4" (SBP-1)	1/2" (SCP-1)	
SC-8A	HSS8x8x1/4	1" (SBP-1)	1/2" (SCP-1)	

STEEL COLUMN NOTES:
1. UNLESS NOTED OTHERWISE, ALL COLUMNS SHALL BE INSTALLED WITH (4) 3/4"□ ANCHOR RODS WITH 3" MINIMUM HOOKS. PROJECT ANCHOR RODS 3" MINIMUM ABOVE THE TOP OF THE BASE PLATE. EMBEDMENT SHALL BE 9" MINIMUM. ALL RODS SHALL BE INSTALLED WITH HARDENED WASHERS BENEATH THE NUT. ANY BOLT HOLES LARGER THAN THE ROD DIAMETER PLUS 5/16" SHALL HAVE 5/16" PLATE WASHERS INSTALLED BENEATH THE HARDENED WASHERS.
2. ALL CAP PLATE BOLTS SHALL BE 3/4"□ A325N BOLTS, TYPICAL UNLESS NOTED OTHERWISE.
3. ANCHOR RODS SHALL NOT BE WELDED (INCLUDING TACK WELDS).
4. SEE GENERAL STRUCTURAL NOTES FOR ADDITIONAL REQUIREMENTS.

PLATE LEGEND
co = 1/2" MINIMUM
ed = 1.1/2" MINIMUM
sp = 3" MINIMUM
bc = BEAM OR GIRDER GAGE
w = BEAM OR GIRDER GAGE + 3"
OR
BEAM OR GIRDER WIDTH + 1"
OR
COLUMN WIDTH + 1"
WHICHEVER IS GREATER

STEEL BASE PLATE TYPES:

STEEL CAP PLATE TYPES:

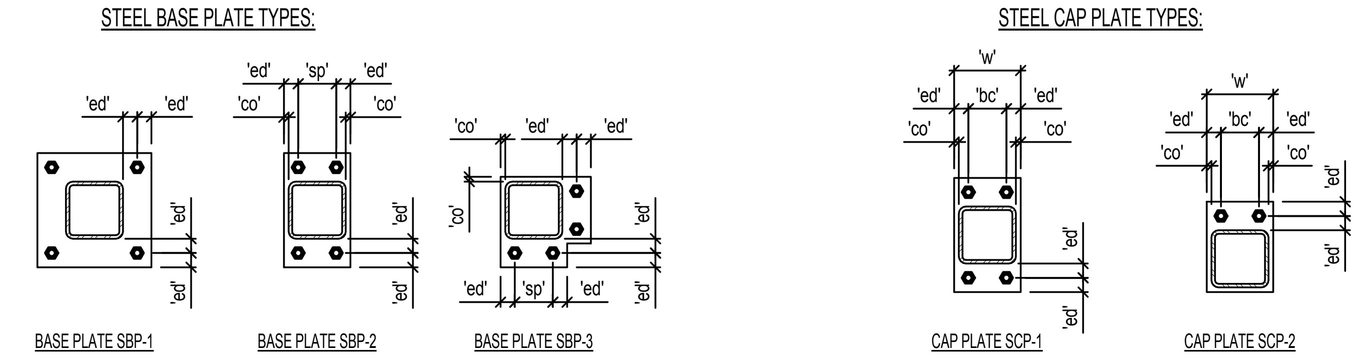

6 STEEL COLUMN SCHEDULE
NO SCALE

A-325 BOLT SCHEDULE

MAXIMUM BEAM SIZE IN EACH BEAM DEPTH GROUP	A-325N BOLTS No. PER BEAM	SIZE	ASD CAPACITY
W8	2	3/4"DIA	16.45K
W10	2	3/4"DIA	21.2K
W12	3	3/4"DIA	24.45K
W14	3	3/4"DIA	31.8K
W16	4	3/4"DIA	42.4K
W18	5	3/4"DIA	53.0K
W21	6	3/4"DIA	63.6K
W24	7	3/4"DIA	74.2K
W27	8	3/4"DIA	84.8K
W30	9	3/4"DIA	95.4K

(1) SHEAR TAB SHALL BE 3/8" THICK.
(2) 5/16" FILLET WELD EACH SIDE OF SHEAR TAB.
(3) BOLT SPACING SHALL BE 3" MIN, TYP.
(4) WHEN MORE THAN ONE ROW OF BOLTS IS NEEDED, THE FIRST ROW SHALL BE A COMPLETE ROW WITH THE REMAINDER OF THE BOLTS PLACED IN THE SECOND ROW.
(5) HSS COLUMN SHALL HAVE A MINIMUM 1/4" THICKNESS USE A SINGLE ANGLE CONNECTION WHERE STEEL TUBE WALL IS TOO THIN.
(6) AT MOMENT FRAME COLUMNS, SEE MOMENT CONNECTION DETAILS FOR CONTINUITY PLATE REQUIREMENTS.
(7) BOLT EDGE DISTANCE, Leh SHALL BE EQUAL TO TWICE THE BOLT DIAMETER FOR BOTH THE PLATE AND THE BEAM WEB.
(8) BOLT EDGE DISTANCE, Lev SHALL BE 1.1/4" FOR BOLT DIAMETERS 7/8" OR LESS AND 1.3/4xBOLT DIAMETER FOR BOLT DIAMETERS GREATER THAN 7/8".

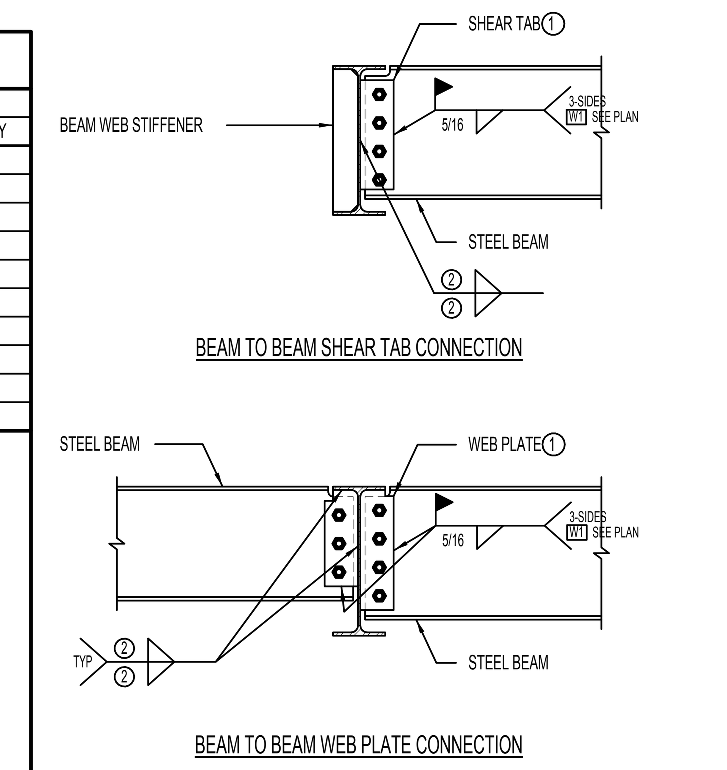

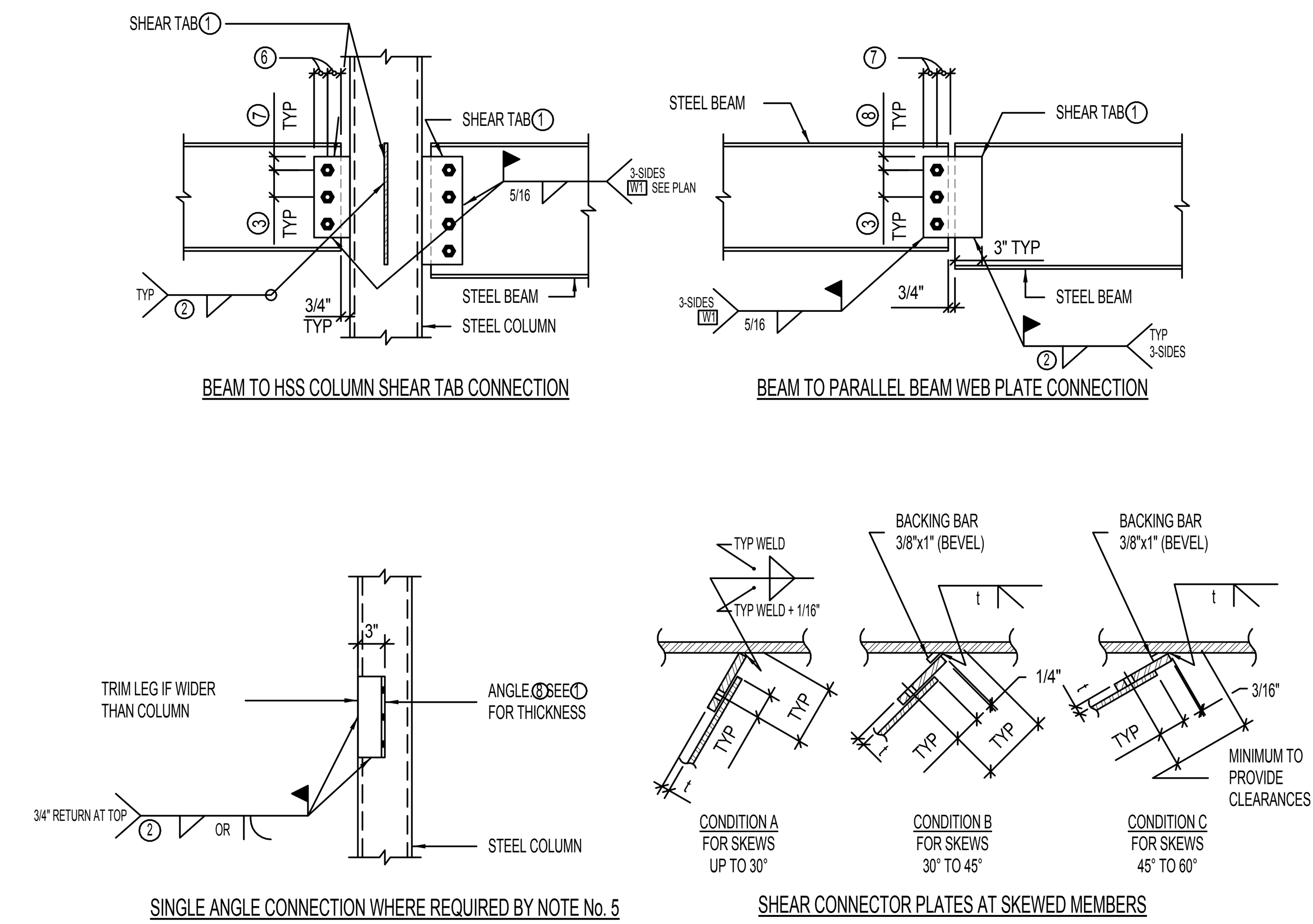

7 TYPICAL 3/4"DIA BOLTED WEB PLATE CONNECTIONS WITH BOLT SCHEDULE
[SINGLE SHEAR STEEL TUBE AND WIDE FLANGE COLUMN]
NO SCALE

METAL STUD WALL SCHEDULE

WALL MARK	WALL FRAMING METAL STUDS	TOP TRACK	BOTTOM TRACK	BOTTOM TRACK FASTENERS	COMMENTS
MSW-6A	600S200-54 AT 24" O.C.	600T200-54	600T200-54	HILTI 'X-U' x 1.1/2" POWER ACTIVATED FASTENERS AT 24" O.C.	
MSW-6B	600S200-54 AT 16" O.C.	600T200-54	600T200-54	HILTI 'X-U' x 1.1/2" POWER ACTIVATED FASTENERS AT 24" O.C.	
MSW-6C	600S200-54 AT 6" O.C.	600T200-54	600T200-54	HILTI 'X-U' x 1.1/2" POWER ACTIVATED FASTENERS AT 24" O.C.	SEE PLAN AND DETAIL 8/S-512 FOR TOP TRACK REINFORCEMENT

METAL STUD WALL NOTES:
1. SCREWS SHALL PENETRATE THROUGH FRAMING MEMBER WITH AT LEAST THREE THREADS.
2. STUDS SHALL BE A MINIMUM OF 1.5/8" WIDE WITH A 3/8" MINIMUM RETURN LIP.
3. TRACKS SHALL BE A MINIMUM OF 1.1/4" WIDE.
4. HORIZONTAL BLOCKING SHALL BE PROVIDED AT 4'-0" O.C. MAX.
5. SEE GENERAL STRUCTURAL NOTES FOR ADDITIONAL REQUIREMENTS.

8 METAL STUD WALL SCHEDULE
NO SCALE

SCHED_STL_W

"Engineering Results"
BHB Consulting Engineers
A Professional Corporation
2766 South Main Street
Salt Lake City, Utah 84115
Phone: 801.355.5656
Fax: 801.355.5950
Email: bhb@bhbengineers.com

JWL + BDG Architecture

VERNAL FIELD HOUSE OF NATURAL HISTORY MUSEUM-ADDITION
for:
UTAH STATE PARKS AND RECREATION/UINTAH COUNTY
470 EAST MAIN STRET VERNAL, UTAH 84078

stamp:

www.babcockdesign.com

date:	15 FEB 2012
project number:	11501
drawn by:	Author
checked by:	Checker
project status:	CONSTRUCTION DOCUMENTS

current as of: 2/15/2012 10:38:42 AM original drawing is 24" x 36"
file path: C:\Documents and Settings\morgant\My Documents\RevitLocal\11501_S-MDL_Morgan.rvt

revisions:
num. description date

The drawings, specifications, designs, and images represented herein are considered by law the architect's instruments of service and are the property of Babcock Design Group, Inc. They are available for limited review and evaluation by clients, consultants, contractors, government agencies, vendors, and office personnel only in accordance with this notice. They are intended for use only for the project specified and are to be used for no other purpose or project including additions to or modification of the completed project. No part thereof may be copied, reproduced, photographed, modified, published, uploaded, transmitted, disclosed, sold, distributed to others in any way including in digital form, or otherwise used without the prior written consent of Babcock Design Group, Inc.
COPYRIGHT © 2009 BABCOCK DESIGN GROUP

sheet title:
SCHEDULES

sheet number:
S-601

PIPING LEGEND

Item	Symbol
GATE VALVE	
OS & Y PATTERN GATE VALVE	
BALL VALVE	
BUTTERFLY VALVE	
MOTORIZED BUTTERFLY VALVE	M
HEAT TRACING	
DEIONIZED WATER	DI
CHECK VALVE (SWING OR LIFT AS REQ'D)	
SOLENOID VALVE	
AUTOMATIC CONTROL VALVE (2-WAY)	
AUTOMATIC CONTROL VALVE (3-WAY)	
PRESSURE REDUCING VALVE	
P & T RELIEF VALVE	
AIR VENT (AUTOMATIC)	
REFRIGERANT LIQUID	RL
REFRIGERANT SUCTION	RS
THERMAL EXPANSION VALVE	
STRAINER	
CIRCUIT SETTER	
FLOW METER	
PET COCK OR GAUGE COCK	
PRESSURE GAUGE W/GAUGE COCK	
THERMOMETER	
TEMPERATURE & PRESSURE TEST PLUG	
IN-LINE PUMP	
FLOW SWITCH	F
AQUASTAT	A
HOSE BIBB OR SILLCOCK	
VACUUM	V
FLOOR DRAIN	
FLOOR SINK	
HOT GAS BYPASS	HGBP
WALL CLEANOUT	
FLOOR OR GRADE CLEANOUT	
GRADE CLEANOUT W/ CONCRETE PAD	
SNOWMELT PIPING @ 8" O.C.	
ROOF DRAIN WITH SNOWMELT PIPING INSTALLED INSIDE PIPE	
CHILLED WATER SUPPLY	CWS
CHILLED WATER RETURN	CWR
CONDENSER WATER SUPPLY	CS
CONDENSER WATER RETURN	CR
HEATING WATER SUPPLY	HWS
HEATING WATER RETURN	HWR
WATER TREATMENT	WT
FIRE DEPT. HORN & LIGHT	
HOT GAS	HG
FLEXIBLE PIPE CONNECTION	
REDUCED PRESSURE BACKFLOW PREVENTER	RPBP
DIRECTION OF FLOW	
ELBOW DOWN	
ELBOW UP	
PIPE CAP	
TEE DOWN	
UNION	
DOMESTIC COLD WATER	
DOMESTIC HOT WATER	
HOT WATER CIRC.	
TEMPERED WATER	T
SANITARY (PLBG) VENT	
SANITARY SEWER ABOVE GRADE	
SANITARY SEWER BELOW GRADE	
DRAIN	D
ROOF DRAIN PIPING	RD
OVERFLOW DRAIN PIPING	OD
STORM DRAIN PIPING ABOVE GRADE	SD
STORM DRAIN PIPING BELOW GRADE	SD
FIRE SERVICE	F
NATURAL GAS	NG
COMPRESSED AIR	CA
VENT THROUGH ROOF	
STEAM	S
CONDENSATE	C
GREASE WASTE	GW
SUB-SLAB DRAINAGE	SSD
FRENCH DRAIN OR RUBBLE DRAIN	FD

MECHANICAL LEGEND

Item	Symbol
RETURN OR EXHAUST DUCT DOWN	
RETURN OR EXHAUST DUCT UP	
SUPPLY AIR DUCT DOWN	
SUPPLY AIR DUCT UP	
SPIN-IN FITTING W/MVD	
FLEXIBLE DUCT	
CEILING SLOT DIFFUSER	
CEILING DIFFUSER	
CEILING EXHAUST GRILLE	
CEILING GRILLE	
ACCESS PANEL	
MANUAL VOLUME DAMPER	
MOTORIZED DAMPER	M
CEILING MOUNTED GRILLE WITH OBD (OPPOSED BLADE DAMPER) INSTALLED IN GRILLE BY MANUF.	
WALL MOUNTED GRILLE WITH OBD (OPPOSED BLADE DAMPER) INSTALLED IN GRILLE BY MANUF.	OBD
DUCT TRANSITION WITH MIN. LENGTH INDICATED	24"
FIRE DAMPER	F
COMBINATION FIRE/SMOKE DAMPER	FS
SMOKE DAMPER	S
THERMOSTAT OR TEMP SENSOR	T
POINT OF CONNECTION TO EXISTING	
DETAIL TAG	DETAIL NO. / DRAWING NO.
KEYED NOTE	NOTE NO.
SECTION CUT LINE	SECTION NO. / DRAWING NO.
CONTROL TRANSFORMER	TRX
ROUTE DUCT THROUGH JOISTS	RTJ
DUCT ELBOW W/ TURNING VANES OR RADIUS ELBOW	
DIRECTION OF AIRFLOW BALANCER TO TURN ALL SLOTS IN DIFFUSER FACING DIRECTION NOTED	

AIR DEVICE SCHEDULE
(NOT ALL USED)

PLAN CODE	TYPE & DUTY	FACE SIZE	NECK SIZE	CEILING TYPE	N.C. LEVEL MAX	MAX. CFM	MANUFACTURER & MODEL NO.	REMARKS
1	ROUND RADIAL SUPPLY	24" X 24"	8"ϕ	SEE PLANS	30	210	AIR DIFFUSION PRODUCTS DNR-3-08	FINISH COLOR TO BE CHOSEN BY ARCHITECT
2	ROUND RADIAL SUPPLY	24" X 24"	10"ϕ	SEE PLANS	30	330	AIR DIFFUSION PRODUCTS DNR-3-10	FINISH COLOR TO BE CHOSEN BY ARCHITECT
3	PERFORATED RETURN	24" X 12"	22" x 10"	SEE PLANS	15	600	PRICE 22"x10"/24"X24"/PDDR/3	FINISH COLOR TO BE CHOSEN BY ARCHITECT
4	PERFORATED RETURN	24" X 24"	22" X 22"	SEE PLANS	15	1200	PRICE 22"X22"/24"X24"/PDDR/3	FINISH COLOR TO BE CHOSEN BY ARCHITECT
5	EXHAUST GRILLE	10" X 10"	8"ϕ	SEE PLANS	31	420	TITUS TXR-1 W/AG-95	FINISH COLOR TO BE CHOSEN BY ARCHITECT

NOTE: COORDINATE MOUNTING FRAME WITH CEILING TYPE. REFER TO ARCHITECTURAL REFLECTED CEILING PLANS. GRILLE NUMBER — GRILLE CFM

PLUMBING FIXTURE CONNECTION SCHEDULE

PLAN CODE	DESCRIPTION	CONNECTION SIZE: COLD WATER	HOT WATER	WASTE	VENT	SPECIFICATIONS
WC-1	WATER CLOSET ADA	1"	N/A	4"	3"	AMERICAN STANDARD 2829.128, WHITE VITREUOS CHINA WITH ELONGATED BOWL. SEAT: OLSONITE #95, WHITE. PROVIDE SUPPLIES AND STOPS.
LAV-1	LAVATORY	½"	½"	1½"	1¼"	AMERICAN STANDARD MODEL 0373.027 WALL HUNG WHITE VITREOUS CHINA. FAUCET: AMERICAN STANDARD MODEL 5502.170 W/ GRID STRAINER.
SS-1	SERVICE SINK	¾"	¾"	3"	2½"	AMERICAN STANDARD MODEL 7741.000 ENAMELED CAST IRON. FAUCET: MODEL 8344.112 WITH TOP BRACE, STOPS, AND VACUUM BREAKER. DRAIN: MODEL 7721.038 FLAT GRID DRAIN.
FD-1	FLOOR DRAIN	N/A	N/A	2"	1½"	JAY R SMITH FLOOR DRAIN MODEL 2005Y05-A06 WITH POLISHED CHROME ADJUSTABLE STRAINER. PROVIDE WITH TRAP PRIMER.
HB-1	HOSE BIB	¾"	N/A	N/A	N/A	ACORN: 8121-CP
FS-1	FLOOR SINK	N/A	N/A	2"	1½"	J. R. SMITH 3140-12-Y W/ NICKEL/BRONZE TOP/ ½ GRATE AND TRAP PRIMER
SC-1	SILLCOCK	¾"	N/A	N/A	N/A	J. R. SMITH 5509QT (w/ INTEGRAL VACUUM BREAKER AND STAINLESS STEEL BOX)
RD-1	ROOF DRAIN	N/A	N/A	N/A	N/A	JAY R. SMITH 1020Y-C-CID.
OD-1	OVERFLOW DRAIN	N/A	N/A	N/A	N/A	JAY R. SMITH 1020Y-C-CID WITH OVERFLOW RING.
DSN-1	DOWN SPOUT NOZZLE	N/A	N/A	N/A	N/A	JAY R. SMITH 1770.
AD-1	AREA DRAIN	N/A	N/A	3"	N/A	JAY R. SMITH 2415Y.

GENERAL NOTES:

1. (symbol) INDICATES POINT OF CONNECTION OF NEW TO EXISTING MECHANICAL, EQUIPMENT, PIPING OR DUCTWORK.
2. COORDINATE ALL FIRE SPRINKLER HEADS AND AIR DEVICE LOCATIONS WITH REFLECTED CEILING PLANS AND ELECTRICAL DRAWINGS.
3. ALL RIGID ROUND DUCTWORK SHALL RECEIVE 1-½" - 0.75 LBS/CU.FT. FIBERGLASS DUCT WRAP. ALL LOW PRESSURE RECTANGULAR DUCT SHALL RECEIVE 1" - 1.5 LBS/CU.FT. DUCT LINER, ATTACH TO DUCT WITH MECHANICAL FASTENERS AND TRIM AND SEAL JOINTS. LOW PRESSURE ROUND FLEXIBLE DUCT TO BE 1-½" THICK INSULATED AND A MAXIMUM OF 6 FT. LONG. ALL INSULATION TO MEET NFPA 90 PER UL 181-CLASS 1. NO DUCTBOARD ALLOWED.
4. ALL DUCT IS TO BE WRAPPED UP TO THE VAV'S. DUCTWORK DOWNSTREAM OF THE VAV'S IS TO BE LINED OR WRAPPED IF ROUND. NO DUCTBOARD IS ALLOWED.
5. DUCTWORK AND PIPE ROUTING AS SHOWN ON DRAWINGS IS DIAGRAMMATIC AND IS NOT TO BE SCALED. WHERE ALTERNATE ROUTING, OFFSETS AND TRANSITIONS ARE REQUIRED FOR COORDINATION OF WORK, THIS CONTRACTOR SHALL MAKE CHANGES WITHOUT ADDITIONAL COSTS.
6. THIS CONTRACTOR SHALL CLOSELY COORDINATE NEW MECHANICAL WITH NEW AND EXISTING MECHANICAL, ELECTRICAL, ARCHITECTURAL AND BUILDING STRUCTURE.
7. THIS CONTRACTOR SHALL FIELD VERIFY ALL MECHANICAL ITEMS PRIOR TO STARTING NEW WORK. ADDITIONAL COST WILL NOT BE ALLOWED FOR CONTRACTOR'S FAILURE TO BECOME FAMILIAR WITH EXISTING SITE CONDITIONS.
8. THIS CONTRACTOR SHALL USE SMACNA DUCT CONSTRUCTION STANDARDS FOR SHEET METAL DUCTS. ALL HIGH PRESSURE DUCTWORK UPSTREAM OF VAV TERMINAL BOXES SHALL BE CONSTRUCTED FOR 2" W.C. STATIC PRESSURE, SEAL CLASS "A". ALL OTHER DUCTWORK (UNLESS OTHERWISE NOTED ON FLOOR PLANS) SHALL BE CONSTRUCTED OF 1" W.C. SEAL CLASS "B".
9. ALL MECHANICAL SYSTEMS SHALL BE INSTALLED IN ACCORDANCE WITH THE CURRENT ADOPTED EDITION OF THE BUILDING CODES, FIRE CODES, MECHANICAL CODES AND PLUMBING CODES.
10. THIS CONTRACTOR SHALL PROVIDE SUBMITTALS ON ITEMS LISTED IN MECHANICAL EQUIPMENT LIST TO THE ENGINEER FOR REVIEW PRIOR TO THE ORDER, PURCHASE OR INSTALLATION.
11. ALL VAV BOXES, RTU's, WATER FLOW RATES AND DIFFUSERS MUST BE BALANCED TO THE VALUES INDICATED ON THE FLOOR PLANS. PROVIDE BALANCE REPORT TO ENGINEER PRIOR TO PROJECT CLOSEOUT.
12. DUCT DIMENSIONS SHOWN ARE INSIDE CLEAR DIMENSIONS.
13. FIRE SPRINKLER CONTRACTOR SHALL ADD AND/OR RELOCATE SPRINKLER HEADS PER REFLECTED CEILING PLAN AND THE CURRENT ADOPTED EDITION OF NFPA AND BUILDING CODE.
14. ALL DOMESTIC COLD AND DOMESTIC HEATING WATER PIPING SHALL BE TYPE 'L' COPPER. ALL WASTE AND VENT PIPING SHALL BE CAST IRON. ALL ROOF AND OVERFLOW DRAINAGE PIPING TO BE CAST IRON.
15. VENT THE HIGH POINTS OF NEW MECHANICAL PIPING.
16. PROVIDE INSULATION FOR THE FOLLOWING:
    a. DOMESTIC HOT WATER PIPING:
       1" THICK FOR ALL PIPE SIZES.
    b. DOMESTIC COLD WATER PIPING:
       ½" THICK FOR PIPE SIZES ½" TO 6".
       (PROVIDE CONTINUOUS VAPOR BARRIER.)
    c. ROOF AND OVERFLOW DRAINS:
       1" THICK FOR ALL PIPE SIZES
       INSULATION ONLY REQUIRED ON HORIZONTAL
       PRIMARY DRAINS AND ALL DRAIN BOWLS
17. INSULATE PIPING WITH FIBERGLASS PIPE COVERING WITH ALL SERVICE JACKET AND SELF-CAP SEAL. FITTINGS SHALL BE MITERED PIPING COVERING OF GLASS FIBER MOLDED FITTINGS FOR USE IN A RETURN AIR PLENUM. THERMAL CONDUCTIVITY SHALL BE A MAXIMUM OF .25/INCH THICKNESS AT 75°F.
18. ——— INDICATES EXISTING OR FUTURE. ——— INDICATES NEW MATERIAL. IF THERE ARE ANY DISCREPANCIES AS TO WHAT IS NEW AND WHAT IS EXISTING, CONTRACTOR IS TO CONTACT THE ARCHITECT AND/OR MECHANICAL ENGINEER. THE EXISTING SHELL DOCUMENTS ARE AVAILABLE THROUGH THE ARCHITECT. ADDITIONAL COSTS WILL NOT BE TOLERATED FOR THE CONTRACTORS FAILURE TO BECOME FARMILIAR WITH EXSTING SHELL AND SITE CONDITIONS.
19. MECHANICAL CONTRACTOR IS TO COORDINATE WITH ELECTRICAL ON SIZE/QUANTITY OF MOTORIZED DAMPERS. I. E. FIRE/SMOKE DAMPERS, FIRE DAMPERS, MOTORIZED DAMPERS, ETC. . .
20. EACH TRADE IS RESPONSIBLE THEIR OWN FIRE CAULKING.
21. DIVISION 15 MUST PROVIDE AND INSTALL ALL ACCESS DOORS FOR FCU's, VALVES, FLOW METERS, ETC. COORDINATE LOCATION WITH GENERAL CONTRACTOR.
22. HOUSEKEEPING PADS FOR ALL EQUIPMENT IS PROVIDED AND INSTALLED BY GENERAL CONTRACTOR. COORDINATE LOCATION WITH MECHANICAL CONTRACTOR.
23. ALL TAKE-OFF'S THROUGHOUT THE ENTIRE BUILDING SHALL BE HIGH EFFICIENCY TAKE-OFF'S (HET's). NO EXCEPTIONS TAKEN.
24. ALL RETURN AIR GRILLES SHALL HAVE SOUND BOOTS W/ LINED INSULATION. INSULATION IS TO BE PAINTED FLAT BLACK.
25. DIVISION 15 TO SUBMIT TO ENGINEER ALL AS-BUILDS OF BUILDINGS MECHANCIAL AND PLUMBING SYSTEMS PRIOR TO JOB COMPLETION AND FINAL PAYMENT.
26. ALL VFD'S ARE TO BE PROVIDED AND WIRED UP BY ELECTRICAL CONTRACTOR AND INSTALLED BY THE MECHANICAL CONTRACTOR.
27. ALL EXPOSED PIPING IS TO BE INSULATED AND WEATHERPROOFED. SEE SPEC SECTION 15080.
28. ALL INVERT ELEVATIONS SHOWN ON PLANS ARE BASED OFF OF FINISHED FLOOR ELEVATION AT 100.0'. CONTRACTOR TO COORDINATE WITH ARCHITECTURAL AND CIVIL DRAWINGS FOR EXACT INVERT ELEVATIONS OF ALL LEVELS.
29. ALL FLOOR DRAINS / FLOOR SINKS THROUGH-OUT THE ENTIRE BUILDING ARE TO HAVE TRAP SEAL PRIMER VALVES PROVIDED / INSTALL BY PLUMBING CONTRACTOR.
30. ALL GAS METER REGUALTORS ARE TO BE VENTED TO THE OUTSIDE OF THE BUILDING BY THE MECHANICAL CONTRACTOR OR PROVIDE / INSTALL VENTLESS REGULATORS IF ALLOWED BY THE LOCAL JURISDICTION. NONE OF THE VENT PIPING OFF THE REGULATORS ARE SHOWN ON THE PLANS FOR CLARITY.
31. ALL FIRE DAMPERS SHOWN ON PLANS SHALL COMPLY WITH THE REQUIREMENTS OF UL 555. ALL SMOKE DAMPERS SHOWN ON PLANS SHALL COMPLY WITH UL 555S. ALL COMBINATION FIRE / SMOKE DAMPERS SHOWN ON PLANS ARE TO COMPLY WITH BOTH UL 555 AND UL 555S. FOR ALL FIRE DAMPERS CONTRACTOR IS TO PROVIDE / INSTALL "NCA MODEL FD" (OR EQUAL), TO MEET STANDARD UL 555 RATING. FOR ALL SMOKE DAMPERS AND COMBINATION FIRE SMOKE DAMPERS CONTRACTOR IS TO PROVIDE / INSTALL "NCA MODEL FSD-3V-211" (OR EQUAL), TO MEET STANDARD UL 555 AND UL 555S RATINGS.
32. ALL DUCTWORK IS TO BE PROVIDED / INSTALLED AS HIGH UP AS POSSIBLE. ALL DUCTWORK MUST BE INSTALLED NO LOWER THAN 12" FROM WHERE IT IS BEING SUPPORTED OR SEISMIC BRACING WILL BE REQUIRED. IF DUCTWORK IS INSTALLED BELOW 12" FROM WHERE IT IS SUPPORTED, IT IS THE MECHANICAL CONTRACTOR'S RESPONSIBILITY TO HAVE SEISMIC SUPPORTS ENGINEERED FOR THE JOB BY A LICENSED ENGINEER.
33. FIRE SPRINKLER CONTRACTOR IS TO ANALYZE EXISTING BUILDING FIRE SUPPRESSION SYSTEM PRIOR BID. THE PURPOSE OF THE ANALYSIS IS FIND OUT RATHER THE EXISTING SYSTEM CAN HANDLE THE INCREASE SQUARE FOOTAGE. PROVIDE DRAWINGS AND CALCULATIONS FOR NEW FIRE SUPPRESSION ROUTING FOLLOWING BID DAY.

ROOF TOP UNIT SCHEDULE RTU-

PLAN CODE	UNIT TONAGE	TOTAL CFM	EXTERNAL STATIC PRESSURE	DESIGN CRITERIA: OUTSIDE AIR TEMP.	RETURN AIR DB	RETURN AIR WB	LEAVING AIR TEMP	EER	SENSIBLE COOLING CAPACITY (MBH)	HEATING CAPACITY: INPUT (MBH)	OUPUT (MBH)	ELECTRICAL: VOLTS PHASE	MCA	MOP	DIMENSIONS (in.): Length	Width	Height	OPER. WEIGHT (lbs)	MANUFACTURER & MODEL NO	REMARKS
RTU-1	7.5	3,000	0.6	95	80	62	53.2/51.8	10.2	70.14	164.00	132.84	460 /3	18.2	25	89	54	55	1,400	TRANE YSC090A4EHA	SEE GENERAL NOTES
RTU-2	8.5	3,600	0.6	95	80	62	54.3/53.2	10.2	75.92	166.40	134.78	460 /3	24.0	30	89	54	55	1,550	TRANE YSC102A4EHA	SEE GENERAL NOTES

GENERAL NOTES:

1. VALUES ARE RATED AT SITE ELEVATION.
2. PROVIDE 10% MINIMUM OUTSIDE AIR SET POINTS.
3. PROVIDE 14" HIGH SEWLF LEVELING FACTORY CURB.
4. PROVIDE ALL WITH CENTRIFUGAL POWER EXHAUST AND ECONOMIZER AS REQUIRED PER THE CURRENT I.E.C.C..
5. PROVIDE FACTORY 2 lb. GAS REGULATOR AND CODE REQUIRED GAS CONNECTION AND GAS TRAIN.
6. PROVIDE COMPRESSOR CRANKCASE HEATER.
7. ALL ROOFTOP UNITS MUST MEET CURRENT ASHRAE ENERGY CODE 90.1 STANDARDS.
8. PROVIDE FACTORY MOUNTED HACR CIRCUIT BREAKER ON 3 TON AND LARGER. PROVIDE FIELD MOUNTED FUSED DISCONNECT ON 2.5 TON AND SMALLER.
9. PROVIDE 7 DAY (AUTO CHANGE OVER) PROGRAMMABLE T-STAT WITH 100 Ft. OF PLEMUN RATED T-STAT WIRE.
10. PROVIDE FACTORY MOUNTED CONV. OUTLET TO BE FIELD WIRED.
11. PROVIDE FACTORY SMOKE DETECTOR IN RETURN OPENING OF UNIT AS REQUIRED BY CODE WITH REQUIRED INTERLOCKING WIRING.
12. PROVIDE COIL GUARDS.
13. PROVIDE TXV's ON UNITS 10 TON & SMALLER.
14. IF UNIT DOES NOT HAVE AN ECONOMIZER, UNIT SHALL BE PROVIDED WITH LOW AMBIENT KIT.

EXHAUST FAN SCHEDULE EF-

PLAN CODE	AREA SERVED	TYPE	CFM @ ELEV.	ESP	FAN RPM	MOTOR: B.H.P.	H.P.	EFFICIENY %	VOLTAGE & PHASE	N.C.	DAMPER TYPE	METHOD OF CONTROL	OPENING SIZE	OPERATING WT. (LBS.)	MANUFACTURER / MODEL	COMMENTS
EF-1	RESTROOM	ROOF CENT.	115	0.5	1105	NA	1/6	65	120/1	4.9	GRAVITY	TIMECLOCK	12" SQ.	35	PENN DOMEX DX06B	-
EF-2	DUST EXHAUST	UTILITY SET	4000	4.0	2421	3.98	5	68.65	460/3	93 LwA	GRAVITY	VFD	16"	459	TWIN CITY BCV 165	VFD BY M.C., WIRED BY E.C.
EF-3	HOOD EXHAUST	ROOF CENT.	1200	0.375	978	0.17	1/4	65	120/1	10.2	GRAVITY	SWITCH	16" SQ.	110	PENN FUMEX FX13B	-

CIRCULATION PUMP SCHEDULE P-

PLAN CODE	DUTY	GPM	FEET OF HEAD	PUMP RPM	MOTOR: H.P.	VOLTAGE & PHASE	MANUFACTURER & MODEL NO.	COMMENTS
P-1	DOMESTIC HOT WATER RECIRCULATION	3	6	3250	1/40	120 / 1	TACO 006	SEE HOT WATER HEATER DETAIL FOR INSTALLATION REQ.

ELECTRIC WATER HEATER SCHEDULE EWH-

PLAN CODE	INPUT (KW)	GALLON CAPACITY	RECOVERY RATE (GAL/HR)	TEMP RISE (°F)	DIMENSIONS: DIA.	HEIGHT	ELECTRICAL VOLT & PHASE	ELEMENTS	OPERATING WEIGHT (LBS)	MANUFACTURER & MODEL NO.	COMMENTS
EWH-1	4.5	30	19.0	100	22.0	23.5	208/1ϕ	1	335	BRADFORD WHITE LD-30U3-1	PROVIDE WITH AMTROL ST-5 EXPANSION TANK

PVE Inc.
Consulting Mechanical Electrical Engineers
1040 North 2200 West, Suite 100
Salt Lake City, UT 84116
Phone: (801) 359-3158
Fax: (801) 521-4114

JWL + BDG Architecture

VERNAL FIELD HOUSE OF NATURAL HISTORY MUSEUM - ADDITION
for:
UTAH STATE PARKS AND RECREATION/UINTAH COUNTY
490 EAST MAIN STREET VERNAL UTAH 84078

date: FEB. 15, 2011
project number: 11199.01
drawn by: AG
checked by: RJV
project status: 100% DFCM REVIEW

stamp: Patrick T. Cantrell, REGISTERED PROFESSIONAL ENGINEER, 323760, State of Utah

revisions: no. / date / description

www.babcockdesign.com

sheet title: MECHANICAL SCHEDULES

sheet number: M001

KEYEDNOTES:	
KEY #	Keynote Text

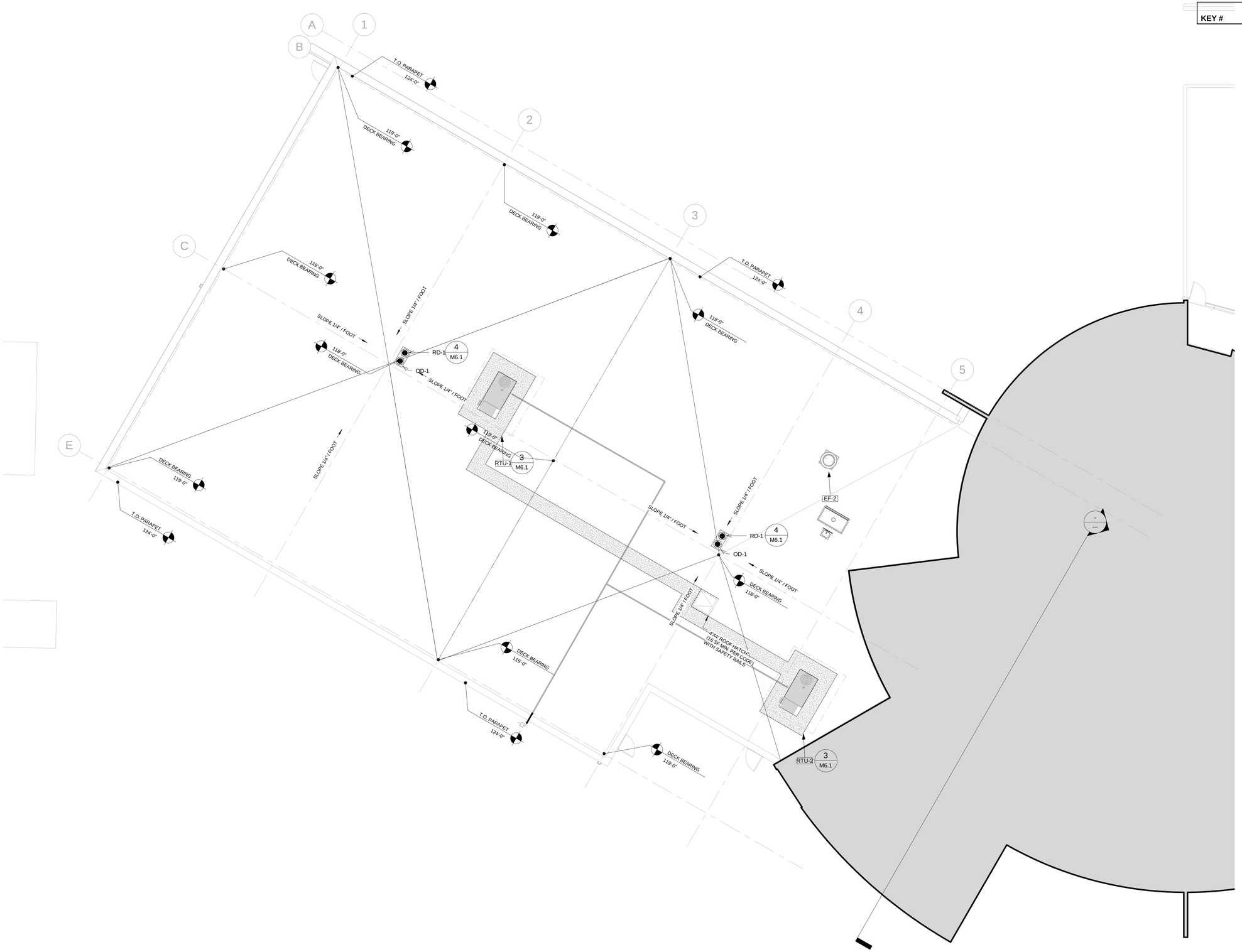

1 MECHANICAL ROOF PLAN
1/8" = 1'-0"

revisions:		
num.	description	date

date:	FEB. 15, 2011
project number:	11198.01
drawn by:	ABG
checked by:	RJV
project status:	100% DFCM REVIEW

Current as of: 2/14/2012 5:52:34 PM
File: P:\Projects\11198.01 - Vernal Field House of Natural History Museum\Mechanical\ Latest.rvt
original drawing is 24" x 36"

This drawings, specifications, designs, and/or plans are the property of and shall remain the property of Babcock Design Group, Inc. The use, reuse, or alteration of this drawing without the written consent of Babcock Design Group, Inc. is prohibited. Any reuse, revisions, and other purposes not in accordance with this notice. They are subject to return on demand. Reproduction of these documents or any part thereof is prohibited without the written consent of Babcock Design Group, Inc. Reproduction of the completed project, for part thereof may be copied, reproduced, photographed, photocopied, or otherwise used without the written consent of Babcock Design Group, Inc. Nothing herein is legal form, or otherwise used without the prior written consent of Babcock Design Group, Inc.
COPYRIGHT © 2009 BABCOCK DESIGN GROUP

stamp:

REGISTERED PROFESSIONAL ENGINEER
No. 171794
STEPHEN P. OLSEN
STATE OF UTAH

VERNAL FIELD HOUSE OF NATURAL HISTORY MUSEUM - ADDDITION

for:

UTAH STATE PARKS AND RECREATION/UINTAH COUNTY

490 EAST MAIN STREET VERNAL, UTAH 84078

www.babcockdesign.com

JWL + BDG Architecture

sheet title:
MECHANICAL ROOF PLAN

sheet number:
M101

KEYEDNOTES:	
KEY #	Keynote Text

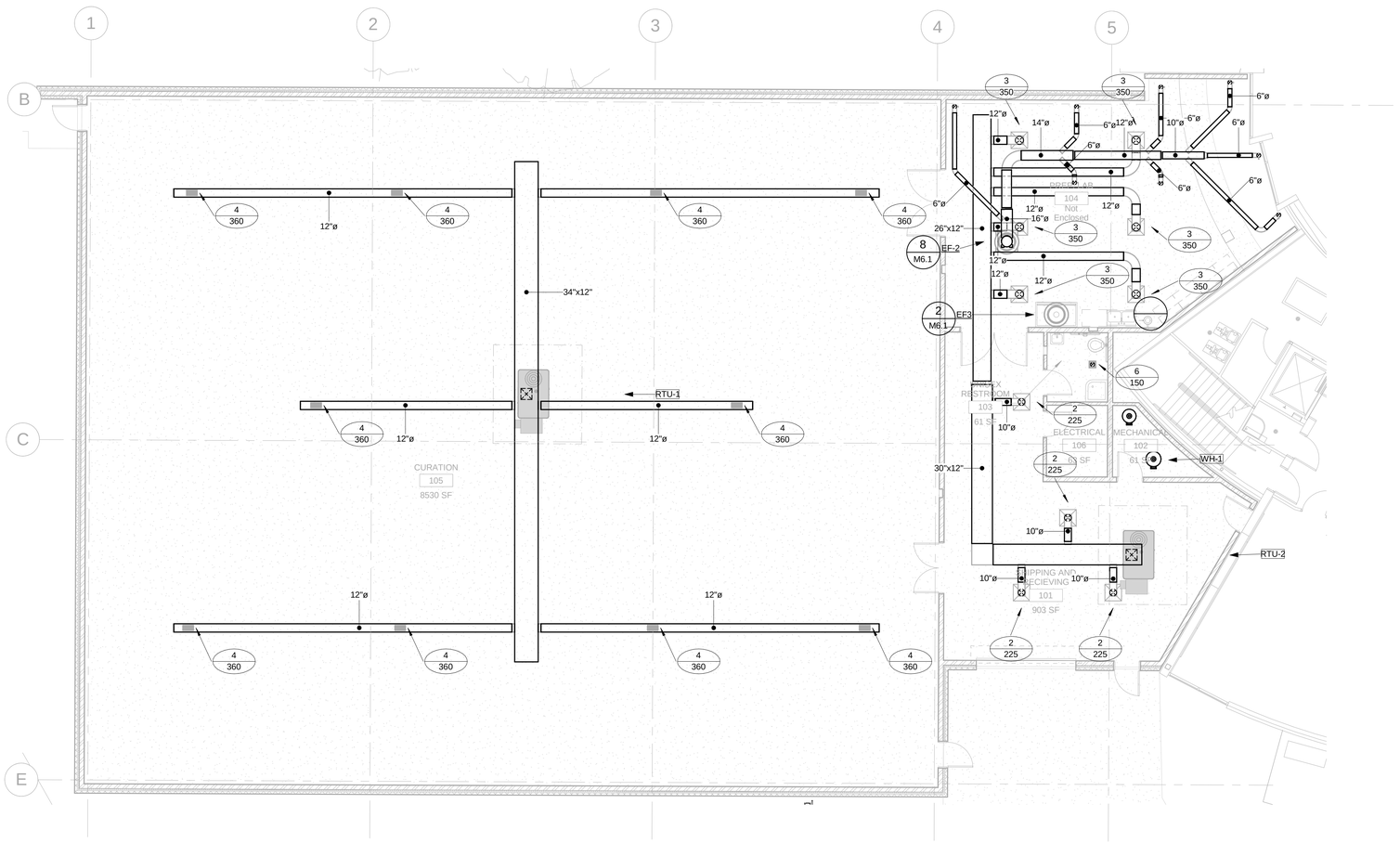

1 LEVEL 1 - MECHANICAL PLAN
1/8" = 1'-0"

revisions:		
num.	description	date

date: FEB. 15, 2011
project number: 11198.01
drawn by: ABG
checked by: RJV
project status: 100% DFCM REVIEW

current as of: 2/14/2012 5:52:35 PM
File: P:\11198.01 VFHM Phase 2\11198.01 - Vernal Field House of Natural History Museum\Mech\Special Labbel.rvt
original drawing is 24" x 36"

This drawings, specifications, designs, and/or plans are the property of and are subject to the copyright of Babcock Design Group, Inc. They are the property of the Babcock Design Group, Inc. and may not be used for any purpose other than in connection with this project. They are provided for use only for the construction of the completed project. No part thereof may be copied, reproduced, photographed, modified, or otherwise used without the prior written consent of Babcock Design Group, Inc. Nothing is digital form, or otherwise used without the prior written consent of Babcock Design Group, Inc.
COPYRIGHT © 2009 BABCOCK DESIGN GROUP

stamp:

REGISTERED PROFESSIONAL ENGINEER
No. 171794
STEPHEN P. OLSEN
STATE OF UTAH

VERNAL FIELD HOUSE OF NATURAL HISTORY MUSEUM - ADDDITION

for:

UTAH STATE PARKS AND RECREATION/UINTAH COUNTY

490 EAST MAIN STREET VERNAL, UTAH 84078

www.babcockdesign.com

JWL + BDG Architecture

sheet title:
LEVEL 1 - MECHANICAL PLAN

sheet number:
M201

NOTE: THIS IS A TYPICAL FLOOR DRAIN INSTALLATION. FOR DIFFERENT TYPES OF FLOORING THE TOP FINISH (SHOWN AS THINSET AND TILE) MAY DIFFER FROM WHAT'S SHOWN. SEE ARCHITECTURAL PLANS FOR FLOORING TYPES.

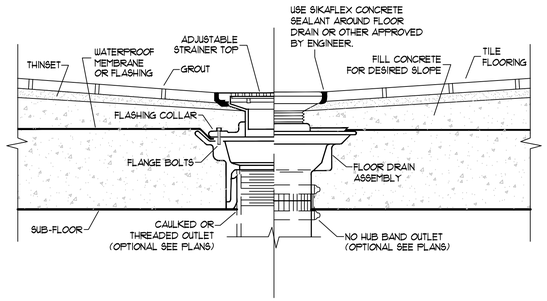

1 M6.1

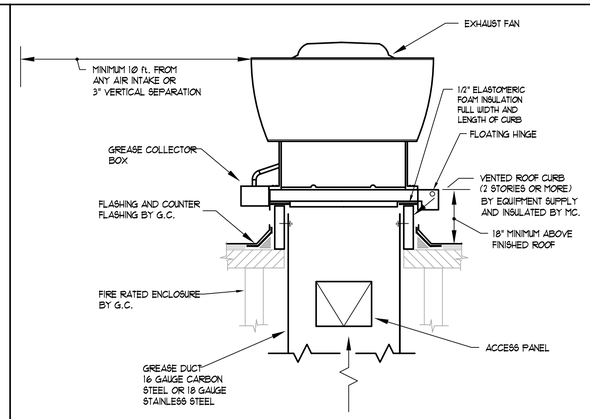

2 M6.1

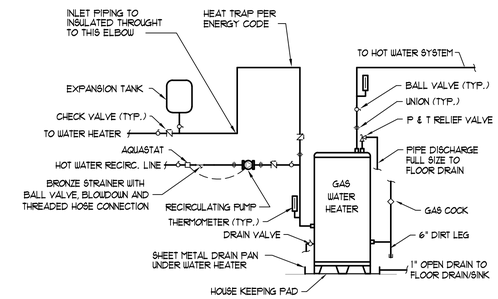

3 M6.1 GAS WATER HEATER PIPING DETAIL

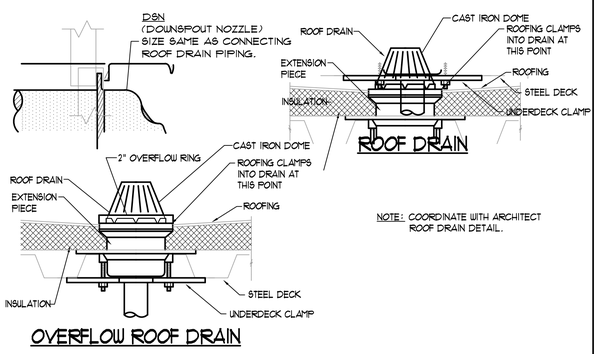

NOTE: COORDINATE WITH ARCHITECT ROOF DRAIN DETAIL.

4 M6.1 ROOF DRAIN & OVERFLOW ROOF DRAIN DETAIL

NOT TO SCALE

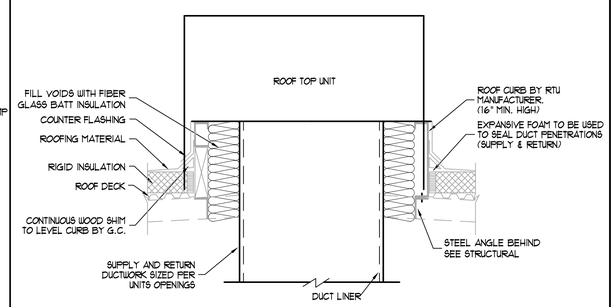

5 M6.1 ROOF TOP UNIT CURB DETAIL

NOT TO SCALE

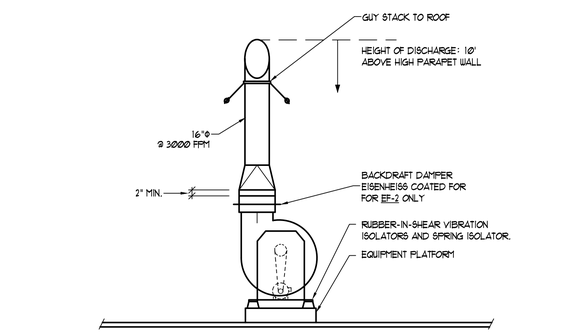

END VIEW

NO SCALE

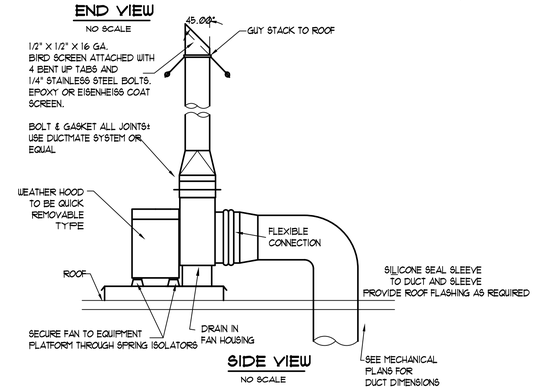

SIDE VIEW

NO SCALE

CLOCKWISE SHOWN & COUNTERCLOCKWISE OPPOSITE

8 M6.1 UTILITY EXHAUST FAN INSTALLATION DETAIL 15830-10

NOT TO SCALE

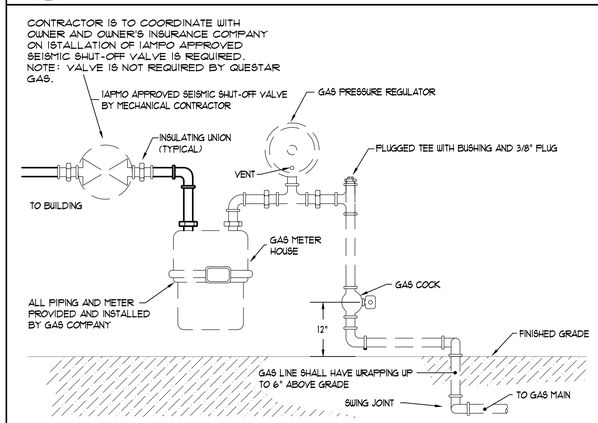

6 M6.1 GAS METER SERVICE CONNECTION DETAIL

PVED-GASMET

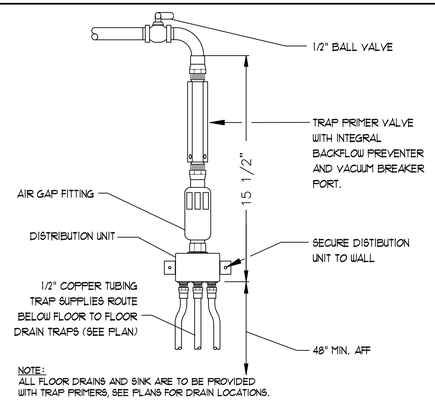

NOTE:
ALL FLOOR DRAINS AND SINK ARE TO BE PROVIDED WITH TRAP PRIMERS, SEE PLANS FOR DRAIN LOCATIONS.

7 M6.1 TRAP PRIMER DETAIL

NOT TO SCALE

revisions: num.	description	date
1	100% DFCM REVIEW	FEB 15, 2011
2	RJV	1119901
3	TH	
4		
5		
6		
7		
8		

date:

project number:

drawn by:

checked by:

project status:

current as of: 5/16/2012 1:14:52 PM
original drawing is 24" x 36"
Natural History Museum\Mechanical.rvt

This drawing, specification, or other document, or any portion of the foregoing is the property of Babcock Design Group Inc. They are instruments of service and are the property of Babcock Design Group Inc. They are not to be used for any purpose other than those agreed to in writing by Babcock Design Group Inc. Reproductions, or other permanent records in connection with this notice. They are intended for use only for the original project for which they were prepared and delivered. Any other use, including but not limited to, any reproduction, modification, or use on other projects, is not allowed without the express written consent of Babcock Design Group Inc. Visual contact with these documents shall constitute proof of knowledge of the restrictions on their use. These restrictions shall be binding on all persons and entities who have visual contact with these documents. Ownership of these documents is retained by Babcock Design Group Inc. regardless of any claim to the contrary.

COPYRIGHT © 2008 BABCOCK DESIGN GROUP

stamp:

Patrick T. Cantrell REGISTERED PROFESSIONAL ENGINEER 323760 State of Utah

VERNAL FIELD HOUSE OF NATURAL HISTORY MUSEUM - ADDDITION

for:

UTAH STATE PARKS AND RECREATION/UINTAH COUNTY

430 EAST MAIN STREET VERNAL, UTAH 84078

www.babcockdesign.com

JWL + BDG Architecture

PVE Inc. Consulting Mechanical Electrical Engineers
1040 North 2200 West, Suite 100
Salt Lake City, UT 84116
Phone: (801) 359-3158
Fax: (801) 521-4114

sheet title: MECHANICAL DETAILS

sheet number: M601

KEYEDNOTES:

KEY #	Keynote Text
1	COMPRESSED AIR DROP DOWN WALL TERMINATE @ ABOVE FLOOR, PROVIDE CONNECTION COORDINATE WITH OWNER CONNECTION TYPE.
2	OWNER PROVIDED AIR COMPRESSOR CONNECT AS REQUIRED.
3	RISE 1 1/4" 4OZ. NG UP TO ROOF TOP UNITS.
4	DROP 6" ROOF DRAIN DOWN WALL TO BELOW GRADE FOR CONNECTION WITH CIVIL, STUB 5' BEYOND BUILDING PERIMETER.
5	GAS SERVICE BY OTHERS.
6	CONNECT 3/4" WATER LINE IN BOILER, CONNECTION TO BE NO LESS THAN 1".
7	PROVIDE WATER HEATER WITH RECUIRCULATION PUMP.

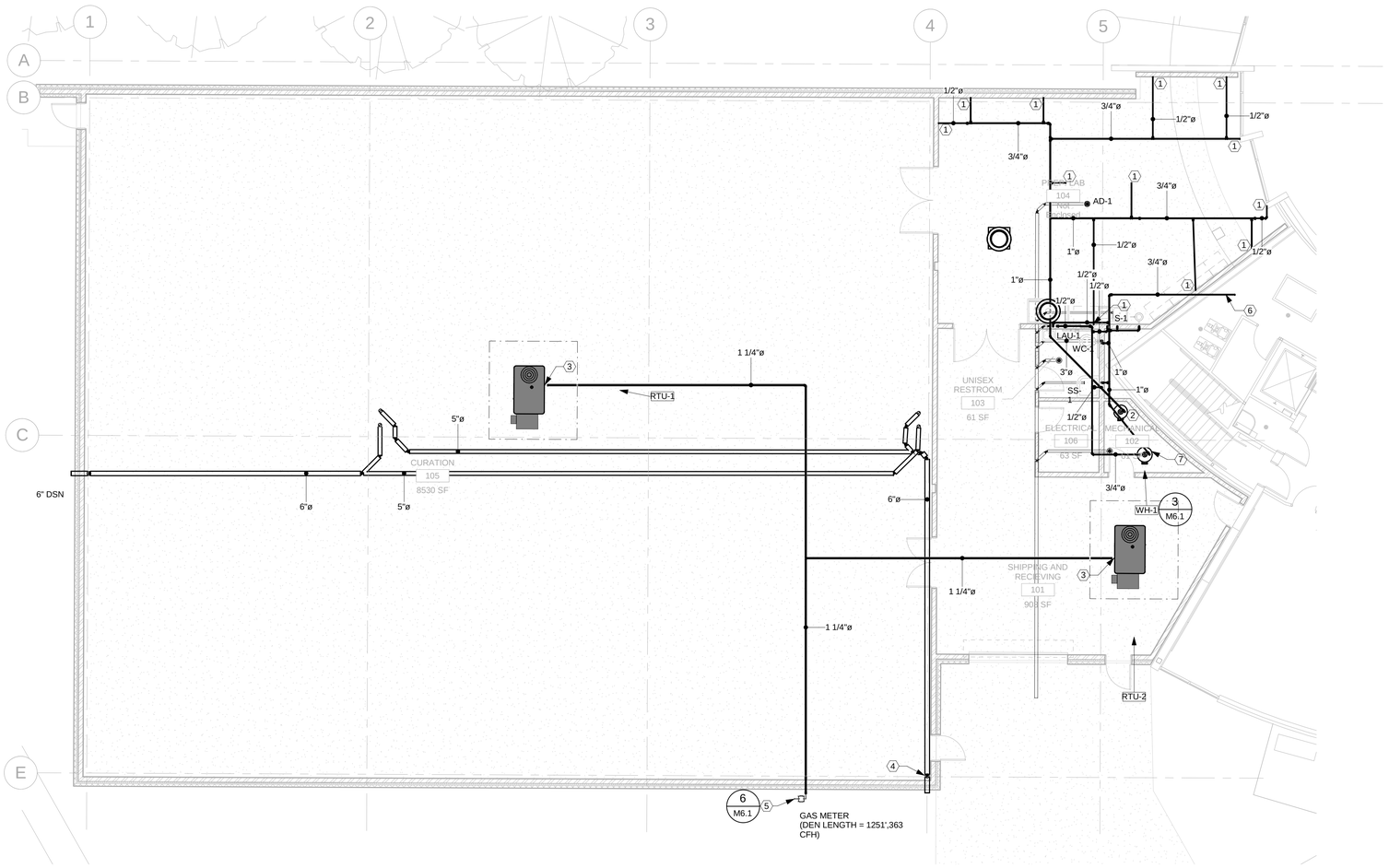

1 LEVEL 1 - PLUMBING PLAN
1/8" = 1'-0"

revisions:		
num.	description	date

date: FEB. 15, 2011
project number: 11199.01
drawn by: ABG
checked by: RJV
project status: 100% DFCM REVIEW

Current as of: 2/14/2012 5:52:38 PM
File name: P:\Projects\11199.01\11199.01 - Vernal Field House of Natural History Museum\Mechanical\ Latest.rvt
original drawing is 24" x 36"
for plots:

The drawings, specifications, designs, and information contained in this document, filing, or file are the property of JWL + BDG Architecture and may not be used for any purpose other than that specified by JWL + BDG Architecture, its successors, and other personnel only in accordance with this notice. They are protected for use only for the specified purpose and may not be used for any other purpose without the express written consent of JWL + BDG Architecture. Reproduction of the completed project, fig part thereof may be copied, reproduced, photographed, modified, published, or otherwise used without the express written consent of JWL + BDG Architecture. Nothing in digital form, or otherwise used without the prior written consent of Babcock Design Group, Inc.

COPYRIGHT © 2009 BABCOCK DESIGN GROUP

stamp:

REGISTERED PROFESSIONAL ENGINEER
No. 171794
STEPHEN P. OLSEN
STATE OF UTAH

VERNAL FIELD HOUSE OF NATURAL HISTORY MUSEUM - ADDDITION

for:

UTAH STATE PARKS AND RECREATION/UINTAH COUNTY

490 EAST MAIN STREET VERNAL, UTAH 84078

www.babcockdesign.com

JWL + BDG Architecture

sheet title:
LEVLE 1 - PLUMBING PLAN

sheet number:
P201

ELECTRICAL SYMBOLS

NOTE: SYMBOLS SHOWN IN THIS SCHEDULE ARE TYPICAL. NOT ALL ARE USED IN THIS PROJECT.

DOTTED SYMBOLS INDICATE EXISTING FIXTURE, EQUIPMENT, ETC.

SYMBOL	DESCRIPTION	MOUNTING HEIGHT
	ELECTRICAL WIRING	
	CROSS LINES INDICATE NUMBER OF CONDUCTORS GROUNDING CONDUCTORS NOT INCLUDED.	N/A
	BRANCH CIRCUIT CONCEALED IN CEILING OR WALL	N/A
	BRANCH CIRCUIT CONCEALED IN GROUND OR FLOOR	N/A
A-1,3	BRANCH CIRCUIT HOMERUNS TO PANEL W/PANEL & CIRCUIT NUMBER DESIGNATIONS.	N/A
	CONDUIT RISER UP	N/A
	CONDUIT RISER DOWN	N/A
	CONDUIT STUB (CAP CONDUIT)	AS NOTED
C	CABLE TRAY	AS NOTED
B	BUS DUCT	AS NOTED
	ELECTRICAL POWER	
J	JUNCTION BOX	AS NOTED
	DUPLEX RECEPTACLE	+16"
	QUAD RECEPTACLE	+16"
	SPLIT WIRED DUPLEX RECEPTACLE	+16"
WP	DUPLEX RECEPTACLE WEATHERPROOF AND GFCI	+16"
	DUPLEX RECEPTACLE OUTLET WITH GROUND FAULT CIRCUIT INTERRUPTION PROTECTION	+16"
EWC	RECEPTACLE ELECTRIC WATER COOLER (EWC) WITH GROUND FAULT CIRCUIT INTERRUPTION PROTECTION	+16"
	EQUIPMENT RECEPTACLE	+16"
	SPECIAL PURPOSE RECEPTACLE	+16"
	DUPLEX RECEPTACLE FLOOR	FLOOR
	QUAD RECEPTACLE FLOOR	FLOOR
	POWER/TELEPHONE POLE	FLOOR
	MUTI-OUTLET WIREWAY	+46"
	ELECTRICAL CONNECTIONS	
	NON-FUSED DISCONNECT SWITCH	TOP AT 6'-0"
	FUSED DISCONNECT SWITCH	TOP AT 6'-0"
	MOTOR STARTER/DISCONNECT SWITCH COMBINATION NON-FUSED	TOP AT 6'-0"
	MOTOR STARTER/DISCONNECT SWITCH COMBINATION FUSED	TOP AT 6'-0"
	MOTOR STARTER ONLY	TOP AT 6'-0"
VFD	VARIABLE FREQUENCY DRIVE	+78"
	MOTOR CONNECTION	AS NOTED
	ELECTRICAL DISTRIBUTION	
T	TELEPHONE COMPANY PEDESTAL	AS NOTED
GS	POWER COMPANY GROUND SLEEVE	AS NOTED
	POWER COMPANY SITE TRANSFORMER	AS NOTED
	HIGH VOLTAGE (277/480 VOLT) PANELBOARD	TOP AT 6'-0"
	LOW VOLTAGE (120/208 VOLT) PANELBOARD	TOP AT 6'-0"
	DRY TYPE TRANSFORMER	AS NOTED
	DISTRIBUTION SWITCHBOARD	AS NOTED
	TELEPHONE AND/OR DATA TERMINAL BOARD	AS NOTED
	ELECTRICAL DEVICES	
	PUSHBUTTON	+48"
	STOP/START STATION	+48"
EPO	"EMERGENCY POWER OFF" MUSHROOM TYPE BUTTON	+48"
T	LINE VOLTAGE THERMOSTAT	+48"
	CLOCK	AS NOTED
N	NURSE CALL BED/BATH STATION	+48"
N	NURSE CALL LIGHT	+84"
NURS	NURSE CALL STATION PANEL	TOP AT 6'-0"

SYMBOL	DESCRIPTION	MOUNTING HEIGHT
	LIGHTING CONTROL	
$	SINGLE POLE SWITCH	+48"
$3	3-WAY SWITCH	+48"
$4	4-WAY SWITCH	+48"
$P	SWITCH WITH PILOT LIGHT	+48"
SD	DIMMER SWITCH	+48"
$K	KEYED SWITCH	+48"
$TM	TIMER SWITCH (SPRING WOUND)	+48"
$T	MANUAL STARTER WITH THERMAL OVERLOAD	AS NOTED
$L	LOW VOLTAGE SWITCH	+48"
$a	CONTROLLING SWITCH (LETTER INDICATES CONTROL CIRCUIT)	+48"
	SINGLE POLE SWITCH/OCCUPANCY SENSOR COMBINATION. MANUAL ON/AUTO OFF (WALL MOUNTED) DUAL TECHNOLOGY'	+48"
	OCCUPANCY SENSOR DUAL TECHNOLOGY	CEILING
TS	TIME SWITCH	+60"
LC	LIGHTING CONTACTOR	+60"
P	PHOTOCELL	AS NOTED
	LIGHTING	
	FLUORESCENT FIXTURE (TYPICAL)	CEILING
EM	FLUORESCENT EMERGENCY FIXTURE (TYPICAL)	CEILING
	SURFACE MOUNTED FIXTURE	CEILING
	RECESSED FIXTURE	CEILING
	WALL MOUNTED FIXTURE	AS NOTED
	WALL MOUNTED EMERGENCY EGRESS FIXTURE	AS NOTED
	FLUORESCENT STRIP	CEILING
	TRACK LIGHTING	CEILING
	EMERGENCY LIGHTING UNIT	+84"
FXX	FIXTURE TYPE SYMBOL (ATTACHED TO FIXTURE SYMBOL)	N/A
	POST TOP AREA LIGHT POLE & FIXTURE	AS NOTED
	AREA LIGHT POLE AND FIXTURE (HEAD QTY AS SHOWN ON PLAN)	AS NOTED
	BOLLARD FIXTURE	GROUND
	FLOOD OR SPOT FIXTURE	AS NOTED
	WALL MOUNTED EXIT LIGHT (SINGLE FACE)	+84"
	WALL MOUNTED EXIT LIGHT (DOUBLE FACE)	+84"
	CEILING MOUNTED EXIT LIGHT (SINGLE FACE)	CEILING
	CEILING MOUNTED EXIT LIGHT (DOUBLE FACE)	CEILING
	TELECOMMUNICATIONS	
	TELEPHONE OUTLET	+16"
	COMPUTER DATA OUTLET	+16"
	VOICE / DATA OUTLET	+16"
	TELEPHONE OUTLET FLOOR	FLOOR
	COMPUTER DATA OUTLET FLOOR	FLOOR
	NETWORK AND VOICE OUTLET FLOOR	FLOOR
	REFERENCE SYMBOLS	
XX X	FEEDER TAG (ONE LINE DIAGRAM)	N/A
	REVISION TAG INDICATOR	N/A
	DETAIL INDICATOR: TOP DETAIL IDENTIFICATION BOTTOM INDICATES SHEET WHERE DETAIL IS LOCATED.	N/A
X-XX	MECHANICAL EQUIPMENT SYMBOL	N/A
X	KEYED NOTE REFERENCE	N/A

SYMBOL	DESCRIPTION	MOUNTING HEIGHT
	AUDIO / VIDEO	
TV	TELEVISION OUTLET	AS NOTED
V	VOLUME CONTROL	+48"
S	SPEAKER	CEILING
M	MICROPHONE JACK	+16"
A	AUXILIARY JACK	+16"
IC	INTERCOM STATION	+48"
	BELL	+84"
	CHIME	+84"
	FIRE ALARM	
F	FIRE ALARM MANUAL PULL STATION	SEE DETAIL
	FIRE ALARM HORN/STROBE	SEE DETAIL
	FIRE ALARM HORN/STROBE WITH GUARD	SEE DETAIL
WP	FIRE ALARM HORN/STROBE WATERPROOF	SEE DETAIL
	FIRE ALARM STROBE	SEE DETAIL
	SMOKE DETECTOR	CEILING
B	SMOKE DETECTOR BATTERY-BACKED	CEILING
D	DUCT SMOKE DETECTOR	IN DUCT
E	SMOKE DETECTOR (ELEVATOR RECALL)	CEILING
	HEAT DETECTOR	CEILING
	GAS DETECTOR	+16"
	DOOR HOLDER	AS NOTED
	PRESSURE SWITCH	AS NOTED
	FIRE ALARM FLOW SWITCH	AS NOTED
	FIRE ALARM TAMPER SWITCH	AS NOTED
	FIRE ALARM FIREFIGHTER PHONE	+48"
CM	CONTROL MODULE	AS NOTED
MM	MONITOR MODULE	AS NOTED
FSD	FIRE/SMOKE DAMPER	AS NOTED
R	FIRE ALARM RELAY	AS NOTED
GAA	FIRE ALARM GENERATOR ANNUNCIATOR	TOP AT 6'-0"
FST	FIRE ALARM TRANSMISSION (MONITORING) DEVICE	AS NOTED
FACP	FIRE ALARM CONTROL PANEL	TOP AT 6'-0"
FAA	FIRE ALARM REMOTE ANNUNCIATOR PANEL	TOP AT 6'-0"
	SECURITY	
D1	SECURITY SYSTEM DOOR CONTACT	DOOR JAMB
D2	SECURITY SYSTEM OVERHEAD DOOR CONTACT	AS NOTED
KP	SECURITY SYSTEM KEYPAD ARM/DISARM	+48"
ES	SECURITY SYSTEM DOOR ELECTRIC STRIKE	AS NOTED
ML	SECURITY SYSTEM MAGNETIC DOOR LOCK	AS NOTED
REX	REQUEST TO EXIT MOTION DETECTOR	AS NOTED
M	SECURITY SYSTEM AREA MOTION SENSOR	AS NOTED
G	SECURITY SYSTEM GLASS BREAK SENSOR	AS NOTED
CR	SECURITY SYSTEM CARD READER	+48"
AK	SECURITY SYSTEM DOOR ACCESS KEYPAD	+48"
	SECURITY SYSTEM CCTV CAMERA	AS NOTED
DVR	DIGITAL VIDEO RECORDER	AS NOTED
MON	SECURITY SYSTEM CCTV MONITOR	AS NOTED
SERT	SECURITY SYSTEM PANEL	TOP AT 6'-0"
PS	POWER SUPPLY LOW VOLTAGE	AS NOTED

ABBREVIATIONS

AFF	ABOVE FINISHED FLOOR	EWC	ELECTRIC WATER COOLER	(N)	NEW
AFP	ARC FAULT PROTECTOR	EWH	ELECTRIC WATER HEATER	NIC	NOT IN CONTRACT
AIC	AMP INTERRUPTING CURRENT (SYMMETRICAL)	(A)	FUTURE	NL	NIGHT LIGHT
AL	ALUMINUM	FA	FIRE ALARM	OFCI	OWNER FURNISHED CONTRACTOR INSTALLED
BG	BELOW GRADE	FLA	FULL LOAD AMPS	OFOI	OWNER FURNISHED OWNER INSTALLED
C	CONDUIT	GFI	GROUND FAULT INTERRUPTER	PNL	PANEL
CFCI	CONTRACTOR FURNISHED CONTRACTOR INSTALLED	GFP	GROUND FAULT PROTECTOR	(R)	RELOCATE
CKT	CIRCUIT	GRC	GALVANIZED RIGID CONDUIT	TVSS	TRANSIENT VOLTAGE SURGE SUPPRESSOR
CO	CONDUIT ONLY	GRND	GROUND	TYP	TYPICAL
CU	COPPER	IG	ISOLATED GROUND	UNO	UNLESS NOTED OTHERWISE
C/W	COMPLETE WITH	MCB	MAIN CIRCUIT BREAKER	WP	WEATHER PROOF
E	EMERGENCY	MCC	MOTOR CONTROL CENTER	(X)	DEMOLISH/DELETE
(E)	EXISTING	MH	MANHOLE	XMR	TRANSFORMER
EPO	EMERGENCY POWER OFF	MLO	MAIN LUGS ONLY		

* THIS IS A TYPICAL ABBREVIATION LIST. NOT ALL ABBREVIATIONS AE USED ON THIS PROJECT.

GENERAL NOTES:

1. THE ELECTRICAL CONTRACTOR SHALL REVIEW AND COORDINATE WITH ARCHITECTURAL, CIVIL, STRUCTURAL, MECHANICAL, PLUMBING AND OTHER DRAWINGS PRIOR TO BID.
2. SUBMIT SHOP DRAWINGS IN ACCORDANCE WITH THE SPECIFICATIONS BOUND IN A THREE RING BINDER, INDEXED IN A NEAT AND ORDERLY MANNER WITH TYPE AND MODEL NUMBERS INDICATED. SUBMITTALS SHALL INCLUDE BUT NOT LIMITED TO: LIGHTING FIXTURES, LAMPS, WIRING DEVICES, OCCUPANCY SENSORS, CONTACTORS, TIME CLOCKS, PHOTOCELLS, RELAYS, SWITCHBOARDS, PANELBOARDS, MOTOR CONTROL CENTERS, SAFETY SWITCHES, MOTOR STARTERS, OVERCURRENT PROTECTION DEVICES, TRANSFORMERS, CONDUCTORS OVER 600 VOLTS AND ALL SPECIAL SYSTEMS SUCH AS FIRE ALARM, LIGHTING CONTROLS, SECURITY SYSTEMS, SOUND SYSTEMS ETC.
3. IT IS THE INTENT OF THESE DRAWINGS AND SPECIFICATIONS TO ESTABLISH A STANDARD OF QUALITY. MANUFACTURES CATALOG NUMBERS ARE LISTED AS A BASIS OF DESIGN. ELECTRICAL CONTRACTOR SHALL SUBMIT PRODUCT INFORMATION THAT DEVIATES FROM ORIGINAL DESIGN AND SPECIFICATION.
4. CONTRACTOR SHALL SECURE AND PAY FOR ALL NECESSARY BUILDING PERMITS AND INSPECTION FEES.
5. ALL IMPACT FEES ASSOCIATED WITH CITY, UTILITY OR SERVICE COMPANIES FOR BUT NOT LIMITED TO POWER, TELEPHONE, FIBER OPTIC & INTERNET SHALL BE THE RESPONSIBILITY OF THE OWNER.
6. THE ELECTRICAL CONTRACTOR SHALL BE RESPONSIBLE TO COORDINATE WITH THE GENERAL CONTRACTOR TO PROVIDE AND INSTALL TEMPORARY POWER FOR PROJECT CONSTRUCTION AS REQUIRED. ALL ENERGY COSTS ARE THE RESPONSIBILITY OF THE GENERAL CONTRACTOR.
7. DO NOT SCALE DRAWINGS VERIFY DIMENSIONS IN FIELD PRIOR TO MAKING ANY ROUGH-INS.
8. ELECTRICAL CONTRACTOR SHALL REVIEW ALL ARCHITECTS ELEVATIONS, SECTIONS AND FLOOR PLANS PRIOR TO ROUGH IN OF ELECTRICAL DEVICE JUNCTION BOXES.
9. CONSULT ARCHITECTS REFLECTED CEILING PLANS FOR EXACT LOCATIONS OF LIGHTING FIXTURES, SPEAKERS, SMOKE DETECTORS ETC.
10. ELECTRICAL CONTRACTOR SHALL MEET WITH THE CEILING AND MECHANICAL CONTRACTORS TO COORDINATE LOCATIONS, CLEARANCES, CEILING TYPES AND ROUGH-IN REQUIREMENTS OF ALL LIGHTING FIXTURES PRIOR TO DUCT, PIPING AND CEILING INSTALLATIONS.
11. VERIFY EXACT LOCATION OF EQUIPMENT TO BE FURNISHED BY OTHERS PRIOR TO ROUGH-IN.
12. ELECTRICAL CONTRACTOR SHALL VERIFY ALL EQUIPMENT DIMENSIONS AND LOCATIONS BEFORE BEGINNING ROUGH-INS. CONSULT CONTRACT DOCUMENT DRAWINGS AND SHOP DRAWINGS TO VERIFY AND MAINTAIN REQUIRED CLEARANCES.
13. ELECTRICAL ROOM DRAWINGS ARE FOR REFERENCE ONLY OF EQUIPMENT QUANTITIES. ELECTRICAL CONTRACTOR SHALL PROVIDE SHOP DRAWINGS OF ELECTRICAL ROOM SHOWING DIMENSIONS AND CLEARANCES OF ALL EQUIPMENT AND ELECTRICAL GEAR PROVIDED. COORDINATE LAYOUT WITH ONE-LINE DRAWINGS.
14. CONTRACTOR SHALL VERIFY ACTUAL ELECTRICAL LOADS FROM NAMEPLATE RATINGS OF EACH PIECE OF EQUIPMENT REQUIRING POWER. BRING ANY DISCREPANCIES TO THE ATTENTION OF THE PROJECT ENGINEER.
15. WORK SHALL BE PERFORMED IN A WORKMANLIKE MANNER, PER INDUSTRY STANDARD AND TO THE SATISFACTION OF THE ARCHITECT AND ENGINEER.
16. WORK, MATERIALS AND EQUIPMENT SHALL CONFORM TO THE LATEST EDITIONS OF LOCAL, STATE AND NATIONAL CODES, STANDARDS AND ORDINANCES.
17. FINAL CONNECTIONS TO EQUIPMENT SHALL BE MADE AS PER MANUFACTURERS WRITTEN INSTRUCTIONS AND APPROVED WIRING DIAGRAMS AND DETAILS. IT SHALL BE THE CONTRACTORS RESPONSIBILITY TO PROVIDE ALL MATERIALS AND EQUIPMENT COMPATIBLE WITH EQUIPMENT ACTUALLY SUPPLIED.
18. ALL EMPTY RACEWAY SYSTEMS SHALL HAVE A 200LB RATED PULL CORD INSTALLED AND SHALL BE IDENTIFIED AT EACH JUNCTION, PULL AND TERMINATION POINT, USING PERMANENT MARKER IN THE BOX. ID SHALL INDICATE INTENDED USE OF CONDUIT, ORIGINATION AND TERMINATION POINTS OF EACH INDIVIDUAL CONDUIT.
19. ALL PENETRATIONS OF FIRE RATED FLOORS, CEILING AND WALLS SHALL BE SEALED WITH UL LISTED AND RATED FIRE STOP MATERIAL TO MAINTAIN FIRE RATING OF ASSEMBLY.
20. ELECTRICAL BOXES SHALL NOT BE LOCATED IN MASONRY OR CONCRETE COLUMNS, BOND BEAMS OR GROUTED CELLS OF MASONRY WALLS ADJACENT TO OPENINGS WITHOUT COORDINATION WITH THE MASONRY CONTRACTOR.
21. WIRE FOR GENERAL USE SHALL BE COPPER 75 °C RATED . WIRING FOR HID FIXTURES WITHIN 3" OF FLUORESCENT BALLAST SHALL BE COPPER, MINIMUM 90C RATED. CONDUCTOR SIZES INDICATED ARE FOR INSTALLATION IN A MAXIMUM 30°C AMBIENT TEMPERATURE ENVIRONMENT. CONDUCTOR AMPACITY SHALL BE DERATED FOR HIGHER AMBIENT INSTALLATIONS.
22. CONDUCTORS HAVE BEEN SIZED FOR VOLTAGE DROP AS PER PLANS AND DIRECT ROUTING. ANY DEVIATION IN CONDUIT ROUTING MAY INCREASE THE WIRE AND CONDUIT SIZE. ELECTRICAL CONTRACTOR IS RESPONSIBLE TO INSURE PROPER OPERATING VOLTAGE ON ALL CIRCUITS BOTH INTERIOR AND EXTERIOR. THE VOLTAGE DROP SHALL NOT EXCEED 3% FOR BRANCH CIRCUITS AND 2% FOR FEEDERS FOR A TOTAL OF 5% COMBINED TOGETHER OF BRANCH AND FEEDER CIRCUITS TO THE FARTHEST OUTLET.
23. ALL WIRING IN PATIENT TREATMENT AREAS SHALL BE ENCLOSED IN METAL RACEWAYS OR LISTED CABLES HAVING A METALLIC ARMOR OR SHEATH. ALL RECEPTACLES SHALL HAVE A SEPARATE INSULATED GROUNDING CONDUCTOR FROM EACH DEVICE TO THE BRANCH PANEL. ELECTRICAL CONTRACTOR SHALL COMPLY WITH ARTICLE 517.13 (A)&(B) OF THE 2008 NATIONAL ELECTRICAL CODE (e.g. WIRING, DEVICE PLACEMENT, ETC.).
24. ELECTRICAL CONTRACTOR SHALL PROVIDE ALL UTILITY METERING EQUIPMENT TO COMPLY WITH THE STANDARDS OF THE LOCAL OR PROJECT SPECIFIC POWER COMPANY.
25. VERIFY EXACT LOCATIONS OF ALL NEW AND EXISTING UNDERGROUND SITE UTILITIES, PIPING AND RACEWAY SYSTEMS PRIOR TO TRENCHING. A UTILITY LOCATING COMPANY SUCH AS "BLUE STAKE" OR EQUAL SHALL BE USED TO VERIFY AND MARK UTILITIES BEFORE TRENCHING. PROVIDE NECESSARY TRENCHING, BACKFILL EXCAVATION, SUPPORTS, SERVICE FEEDERS, (CONDUIT AND/OR WIRE), PULL BOXES, TRANSFORMER PADS, SAW CUTTING AND PATCHING, CONCRETE PAVING ETC, REQUIRED. BACKFILL TRENCHES TO 90% COMPACTION. PATCHING SHALL MATCH EXISTING SURROUNDING SURFACES. CONTRACTOR SHALL OBTAIN AND VERIFY UTILITY COMPANY DRAWINGS AND REQUIREMENTS FOR ALL SITE UTILITIES. ELECTRICAL CONTRACTOR SHALL ALSO COORDINATE ELECTRICAL RELATED UTILITIES WITH THE CIVIL, MECHANICAL, AND SITE EXCAVATION CONTRACTORS.
26. PULLBOXES, CABINETS, ETC. MOUNTED ON THE EXTERIOR OF THE BUILDING SHALL BE WEATHERPROOF TYPE WITH HINGED GASKETED LOCKABLE COVERS SECURED WITH TAMPERPROOF SCREWS.
27. SPLICES IN EXTERIOR PULLBOXES AND MANHOLES SHALL BE MADE WATERPROOF USING "SCOTCAST" SPLICE KIT OR APPROVED EQUAL. SEAL ENDS OF CONDUITS AND DUCTS ENTERING BOXES WITH "DUCTSEAL" OR EQUAL.
28. ELECTRICAL CONTRACTOR SHALL TEST AND VERIFY ALL SYSTEMS WITH PROJECT ENGINEER DURING FINAL INSPECTION TO INSURE PROPER OPERATION. IF TESTS RESULT IN DEFECT THE CONTRACTOR SHALL MAKE ANY CORRECTIONS NECESSARY AT NO ADDITIONAL COSTS TO THE OWNER.
29. PROVIDE RECORD DRAWINGS IN ACCORDANCE WITH THE PROJECT SPECIFICATIONS.
30. THE CONTRACTOR SHALL GUARANTEE THE INSTALLATION AGAINST DEFECTS IN MATERIALS AND WORKMANSHIP, WHICH MAY OCCUR UNDER NORMAL USAGE FOR A PERIOD OF ONE YEAR AFTER SUBSTANTIAL COMPLETION. DEFECTS SHALL BE PROMPTLY CORRECTED.

revisions: num. description date

date: FEB. 15, 2012
project number: 11199.01
drawn by: TH
checked by: CW
project status: 100% DFCM REVIEW

COPYRIGHT © 2009 BABCOCK DESIGN GROUP

stamp: REGISTERED PROFESSIONAL ENGINEER No. 171794 STEPHEN P. OLSEN STATE OF UTAH

JWL + BDG Architecture

for: VERNAL FIELD HOUSE OF NATURAL HISTORY MUSEUM - ADDDITION

UTAH STATE PARKS AND RECREATION/UINTAH COUNTY

490 EAST MAIN STREET VERNAL, UTAH 84078

www.babcockdesign.com

sheet title: ELECTRICAL SYMBOLS AND NOTES

sheet number: E001

1 AREA PLAN
1/8" = 1'-0"

#	KEYNOTE:
1	EXISTING MAIN SERVICE TRANSFORMER.
2	EXISTING MAIN DISTRIBUTION PANEL. ELECTRICAL CONTRACTOR SHALL PROVIDE NEW METER FOR THE EXISTING 600 AMP BREAKER
3	NEW (2) 3" CONDUITS. STUB UP TO NEW MECHANICAL ROOM INTO PANEL H1.
4	ELECTRICAL CONTRACTOR SHALL PROVIDE DISCONNECT FOR NEW MECHANICAL EQUIPMENT.
5	EXISTING 4" CONDUIT STUBBED OUT FROM EXISTING DATA/TELECOM ROOM ON THE SECOND FLOOR. ELECTRICAL CONTRACTOR SHALL VERIFY LOCATION BEFORE BID.

GENERAL NOTES:

1. ALL WIRES IN ENTIRE PROJECT MUST BE RUN IN CONDUIT.
2. FOR STEEL RACEWAY INSTALLED IN CONTACT WITH SOIL, PROVIDE RIGID OR IMC PVC COATED OR WRAPPED RACEWAYS, FITTING, ETC.
3. PROVIDE A MINIMUM 3/4" RACEWAYS.
4. PROVIDE FIVE CAPPED SPARE 3/4" CONDUITS FROM EACH SECTION OF A PANELBOARD INTO THE CEILING AND FLOOR SPACE. IF THE FLOOR SPACE IS NOT ACCESSIBLE, PROVIDE AN ADDITIONAL 3/4" CONDUIT FROM EACH SECTION OF A BRANCH PANELBOARD INTO THE CEILING. PROVIDE 200-LB NYLON PULL CORD IN ALL EMPTY CONDUIT.
5. PROVIDE A MIN OF #12 COPPER CONDUCTORS.
6. PROVIDE SEPARATE NEUTRALS FOR ALL GFI CIRCUIT BREAKERS AND FOR THE LOAD SIDE OF FEED THRU GFCI OUTLETS.
7. PROVIDE LIGHTNING (SURGE) ARRESTERS FOR VOLTAGE TRANSFORMERS AND SWITCHGEAR LOCATED ABOVE GROUND OUT SIDE.
8. SET OVERCURRENT AND GROUND FAULT PROTECTION BASED UPON FAULT CURRENT PROTECTION AND COORDINATION STUDY PREPARED BY A/E.
9. USE FEED THRU GFCI OUTLETS ONLY IF THE OUTLET SERVED IS LOCATED IN THE SAME ROOM.
10. PROVIDE ADDRESSABLE FIRE ALARM SYSTEMS. INSTALL "CLASS A" LOOPED SYSTEMS OR AS APPROVED BY THE FIRE MARSHAL. DO NOT USE THE FOLLOWING COMPONETS UNLESS APPROVED BY THE DIRECTOR, ZONED FIRE ALARM PANELS, IONIZATION SMOKE DETECTORS.
11. FOR COMMUNICATION OUTLETS: PROVDE A 1" EMT CONDUIT WITH A DOUBLE (4" SQUARE) BOX AND SINGLE-GANG MUD RING AT EACH COMMUNICATION OUTLET LOCATION. **NO DASIE CHAIN ALLOWED.** CONDUIT FROM WORKSTATION LOCATIONS SHOULD ROUTE TO A CABLETRAY OR HOME RUN TO TELECOM. ROOM.

revisions: num.	description	date

date: FEB. 15, 2012
project number: 11199.01
drawn by: T.H.
checked by: C.W.
project status: 100% DFCM REVIEW
original drawing is 24" x 36"
Current as of: 2/14/2012 5:47:28 PM
File path: J:\Projects\11199.01 - Vernal Field House of Natural History\Models\Architect.rvt

The drawings and specifications are the property of Babcock Design Group, Inc. They are intended for use only on this project. Any other use, including but not limited to, reproduction, publication, sale, or other personal gain is unacceptable with this notice. They are intended for use only for modifications of the completed project. No part thereof may be copied, reproduced, photographed, modified or published in any form or manner, nor assigned to any other person or firm without the written consent of Babcock Design Group, Inc.
Alpha tone, or estimate sales within the job sealed consent of Babcock Design Group, Inc.
COPYRIGHT © 2009 BABCOCK DESIGN GROUP

stamp:

REGISTERED PROFESSIONAL ENGINEER
No. 171794
STEPHEN P. OLSEN
STATE OF UTAH

VERNAL FIELD HOUSE OF NATURAL HISTORY MUSEUM - ADDDITION

for:

UTAH STATE PARKS AND RECREATION/UINTAH COUNTY

490 EAST MAIN STREET VERNAL, UTAH 84078

www.babcockdesign.com

JWL + BDG Architecture

sheet title: OVERALL BUILDING - POWER PLAN

sheet number: E101

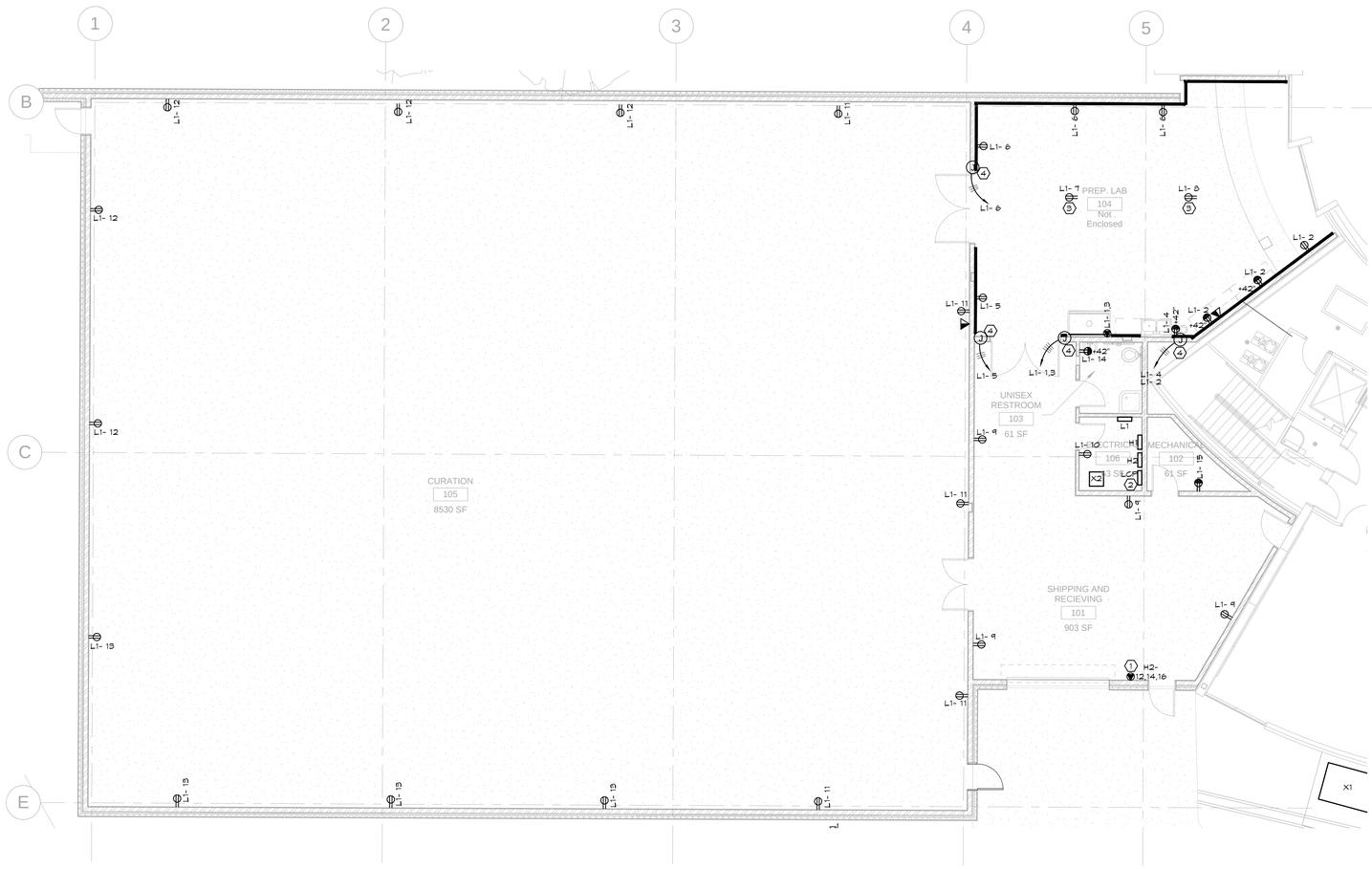

1 LEVEL 1 - POWER PLAN
1/8" = 1'-0"

KEYNOTE:

#	
1	RECEPTACLE FOR WELDER. COORDINATE EXACT LOCTION AND CONNECTION TYPE WITH OWNER.
2	NEW LIGHTING CONTROL PANEL.
3	RECEPTACLE LOCATED FLUSH WITH CEILING. COORDINATE EXACT LOCATION WITH OWNER.
4	JUNCITON BOX FOR WIREMOLD SECTION.

GENERAL NOTES:

1. ALL WIRES IN ENTIRE PROJECT MUST BE RUN IN CONDUIT.
2. FOR STEEL RACEWAY INSTALLED IN CONTACT WITH SOIL, PROVIDE RIGID OR IMC PVC COATED OR WRAPPED RACEWAYS, FITTING, ETC.
3. PROVIDE A MINIMUM 3/4" RACEWAYS.
4. PROVIDE FIVE CAPPED SPARE 3/4" CONDUITS FROM EACH SECTION OF A PANELBOARD INTO THE CEILING AND FLOOR SPACE. IF THE FLOOR SPACE IS NOT ACCESSIBLE, PROVIDE AN ADDTIONAL 3/4" CONDUIT FROM EACH SECTION OF A BRANCH PANELBOARD INTO THE CEILING. PROVIDE 200-LB NYLON PULL CORD IN ALL EMPTY CONDUIT.
5. PROVIDE A MIN OF #12 COPPER CONDUCTORS.
6. PROVIDE SEPARATE NEUTRALS FOR ALL GFI CIRCUIT BREAKERS AND FOR THE LOAD SIDE OF FEED THRU GFCI OUTLETS.
7. PROVIDE LIGHTNING (SURGE) ARRESTERS FOR VOLTAGE TRANSFORMERS AND SWITCHGEAR LOCATED ABOVE GROUND OUT SIDE.
8. SET OVERCURRENT AND GROUND FAULT PROTECTION BASED UPON FAULT CURRENT PROTECTION AND COORDINATION STUDY PREPARED BY A/E.
9. USE FEED THRU GFCI OUTLETS ONLY IF THE OUTLET SERVED IS LOCATED IN THE SAME ROOM.
10. PROVIDE ADDRESSABLE FIRE ALARM SYSTEMS. INSTALL "CLASS A" LOOPED SYSTEMS OR AS APPROVED BY THE FIRE MARSHAL. DO NOT USE THE FOLLOWING COMPONETS UNLESS APPROVED BY THE DIRECTOR. ZONED FIRE ALARM PANELS, IONIZATION SMOKE DETECTORS.
11. FOR COMMUNICATION OUTLETS: PROVDE A 1" EMT CONDUIT WITH A DOUBLE (4" SQUARE) BOX AND SINGLE-GANG MUD RING AT EACH COMMUNICATION OUTLET LOCATION. **NO DASIE CHAIN ALLOWED.** CONDUIT FROM WORKSTATION LOCATIONS SHOULD ROUTE TO A CABLETRAY OR HOME RUN TO TELEGOM. ROOM.

revisions: rev#.	description	date

date: FEB. 15, 2012
project number: 11199.01
drawn by: T.H.
checked by: C.W.
project status: 100% DFCM REVIEW
original drawing is 24" x 36"
Current as of: 2/14/2012 5:47:27 PM
Last plotted: 2/14/2012 5:47:27 PM Version Filed in Project of Record: History
Materials/Electrical.rvt

The drawings, specifications and other documents and the designs incorporated herein, are the property of Babcock Design Group, Inc. They are instruments of service for use solely with respect to this project. Babcock Design Group, Inc. shall be deemed the author and owner of such documents and designs, and other personnel shall be accordance with this notice. They are provided for use only for the intended purpose and may not be used for other purposes without the express written consent of Babcock Design Group, Inc. Reproduction, modification of the contained projects, in part or whole, may not be made without the express written consent of Babcock Design Group, Inc. Visual contact with these documents shall constitute acceptance of the restrictions stated in this notice.
COPYRIGHT © 2009 BABCOCK DESIGN GROUP

stamp:

REGISTERED PROFESSIONAL ENGINEER
No. 171794
STEPHEN P. OLSEN
STATE OF UTAH

VERNAL FIELD HOUSE OF NATURAL HISTORY MUSEUM - ADDDITION

for:

UTAH STATE PARKS AND RECREATION/UINTAH COUNTY

450 EAST MAIN STREET VERNAL, UTAH 84078

www.babcockdesign.com

JWL + BDG Architecture

sheet title: LEVEL 1 - POWER PLAN

sheet number: E201

LIGHT FIXTURE SCHEDULE

FIXTURE NUMBER	FIXTURE MANUFACTURER	FIXTURE CATALOG #	DESCRIPTION	LAMPS TYPE	LAMPS QTY.	FIXTURE VOLTS	FIXTURE WATTS	FIXTURE MOUNTING	REMARKS
F1	COLUMBIA METALUX DAYBRIGHT	LHR-40-2-54-M4R-ST-EP-U IA-2P8HO-EB51 IA286HO-1/2EB	NARROW FLUORESCENT HIGH BAY	4' T8HO 54 W	2	277	150	PENDANT	----
F2	COLUMBIA METALUX DAYBRITE	4PS-24-3-32-S-A12-EPTT-U 2GC5-332A125-EB51 2PG332-TS12-1/2EB	2X4 SPECIFICATION GRADE STATIC TROFFER	3 T8 32W	3	277	99	RECESSED	----
F3	COLUMBIA DAYBRITE METALUX	W-4-2-32-EP-U-EL CD232W-2/1-EB BE-232-EB51	SLIM WALL MOUNT LIGHT	2 T8 32W	2	277	66	WALL	----
F4	COLUMBIA METALUX DAYBRITE	DE-4-2-32-E-U S6-232-EB51 T232-1/2EB	4' SIDE LAMP FLUORESCENT CHANNEL	4' T8 32W	2	277	66	PENDANT	----
F5	HUBBELL DAYBRITE LUMARK	CLL-70PS WLD070M-LP MHSP-70H-MT-LL	COMPACT WALLPACK	70W MH	1	277	70	WALL	----
F6	PRESCOLITE PORTFOLIO OMEGA	CFTA032EB-STTA02 C6042-E-6001-U 5632PLTU-T6CS	6" COMPACT FLUORESCENT RECESSED CAN LIGHT	CFL 32	1	277	32	RECESSED	----
EX1	DUAL LITE ISOLITE MCPHILBEN	CBRS-1-R-N-E LPDCEM6S-WW-UN ER55L-1-NB	EDGE-LIT LED EXIT SIGN	----	----	277	----	SURFACE	----
EX2	SURE-LITES MCPHILBEN COMPAS5	CG-6-WH CT6 CSE/2	2-Head EM Wall Pack (Surface)	----	----	277	----	WALL	----

NOTE:
ELECTRICAL CONTRACTOR SHALL PROVIDE A 'QUICK DISCONNECT HARNESS' FOR EACH FLUORESCENT LIGHTING FIXTURE TO SERVE AS A MEANS OF DISCONNECT TO ALLOW THE FIXTURE BALLAST TO BE SERVICED IN PLACE, AS PER
THE NATIONAL ELECTRICAL CODE 2008, ARTICLE 410.130 (G).

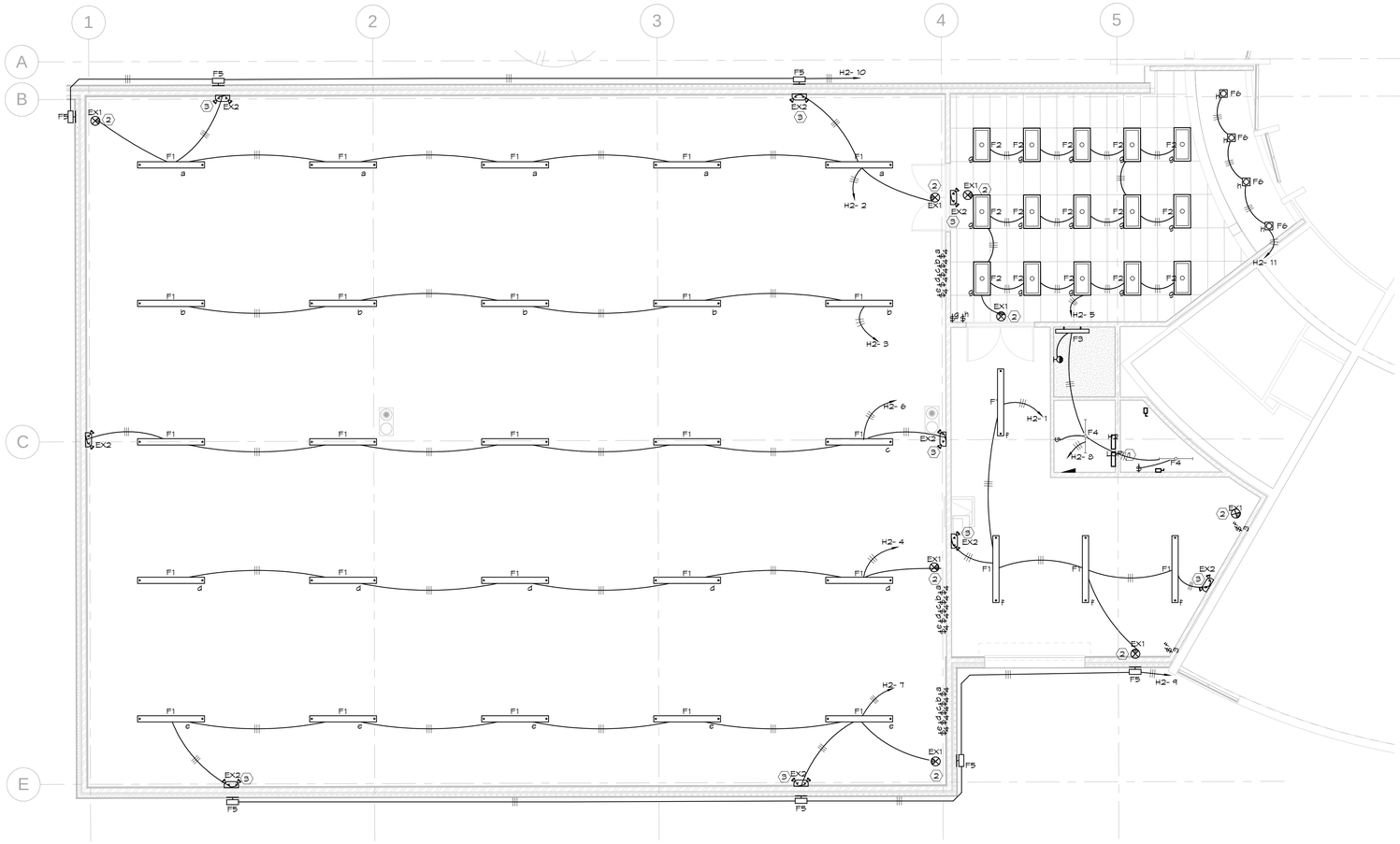

1 LEVEL 1 - LIGHTING PLAN
1/8" = 1'-0"

KEYNOTE:

1 NEW LIGHTING CONTROL PANEL.
2 EXIT SIGN TO BE UNSWITCHED WITH BATTERY BACKUP.
3 EMERGENCY LIGHT TO BE UNSWITCHED WITH BATTERY BACKUP.

GENERAL NOTES:

1. ALL WIRES IN ENTIRE PROJECT MUST BE RUN IN CONDUIT.
2. FOR STEEL RACEWAY INSTALLED IN CONTACT WITH SOIL, PROVIDE RIGID OR IMC PVC COATED OR WRAPPED RACEWAYS, FITTING, ETC.
3. PROVIDE A MINIMUM 3/4" RACEWAYS.
4. PROVIDE FIVE CAPPED SPARE 3/4" CONDUITS FROM EACH SECTION OF A PANELBOARD INTO THE CEILING AND FLOOR SPACE. IF THE FLOOR SPACE IS NOT ACCESSIBLE, PROVIDE AN ADDITIONAL 3/4" CONDUIT FROM EACH SECTION OF A BRANCH PANELBOARD INTO THE CEILING. PROVIDE 200-LB NYLON PULL CORD IN ALL EMPTY CONDUIT.
5. PROVIDE A MIN OF #12 COPPER CONDUCTORS.
6. PROVIDE SEPARATE NEUTRALS FOR ALL GFI CIRCUIT BREAKERS AND FOR THE LOAD SIDE OF FEED THRU GFCI OUTLETS.
7. PROVIDE LIGHTNING (SURGE) ARRESTERS FOR VOLTAGE TRANSFORMERS AND SWITCHGEAR LOCATED ABOVE GROUND OUT SIDE.
8. SET OVERCURRENT AND GROUND FAULT PROTECTION BASED UPON FAULT CURRENT PROTECTION AND COORDINATION STUDY PREPARED BY A/E.
9. USE FEED THRU GFCI OUTLETS ONLY IF THE OUTLET SERVED IS LOCATED IN THE SAME ROOM.
10. PROVIDE ADDRESSABLE FIRE ALARM SYSTEMS. INSTALL "CLASS A" LOOPED SYSTEMS OR AS APPROVED BY THE FIRE MARSHAL. DO NOT USE THE FOLLOWING COMPONETS UNLESS APPROVED BY THE DIRECTOR, ZONED FIRE ALARM PANELS, IONIZATION SMOKE DETECTORS.
11. FOR COMMUNICATION OUTLETS: PROVIDE A 1" EMT CONDUIT WITH A DOUBLE (4" SQUARE) BOX AND SINGLE-GANG MUD RING AT EACH COMMUNICATION OUTLET LOCATION. **NO DASIE CHAIN ALLOWED**. CONDUIT FROM WORKSTATION LOCATIONS SHOULD ROUTE TO A CABLETRAY OR HOME RUN TO TELECOM. ROOM.

revisions: num.	description	date

date: FEB. 15, 2012
project number: 111991.01
drawn by: T.H.
checked by: C.W.
project status: 100% DFCM REVIEW

Current as of: 2/14/2012, 5:47:29 PM
File name: 111991.01 - Vernal Field House of Natural History.rvt
original drawing is 24" x 36"
Model path: M:\Revit\Electrical*.rvt

The drawings, specifications and other documents, including electronic media, prepared by Babcock Design Group, Inc. They are instruments of service and are the property of Babcock Design Group, Inc. They are intended for use only in connection with the project for which they were prepared. Reproductions, prints, electronic media, and other personnel prior to accordance with this notice. They are intended for use only for the purpose of constructing, maintaining, and operating the project. Any other use, reproduction, or modification of the contained projects, has been or may be created, reproduced, photographed, electronically stored, or otherwise used without the express written consent of Babcock Design Group, Inc. Any use of the contained projects, has been or may be created, reproduced, photographed, electronically stored, or otherwise used without the express written consent of Babcock Design Group, Inc. Alpha Kore, or whatever name under the job exists, consent of Babcock Design Group, Inc.
COPYRIGHT © 2009 BABCOCK DESIGN GROUP

REGISTERED PROFESSIONAL ENGINEER
No. 171794
STEPHEN P. OLSEN
STATE OF UTAH

stamp:

VERNAL FIELD HOUSE OF NATURAL HISTORY MUSEUM - ADDDITION

for:

UTAH STATE PARKS AND RECREATION/UINTAH COUNTY

490 EAST MAIN STREET VERNAL, UTAH 84078

www.babcockdesign.com

JWL + BDG Architecture

sheet title:
LEVEL 1 - LIGHTING PLAN

sheet number:
E301

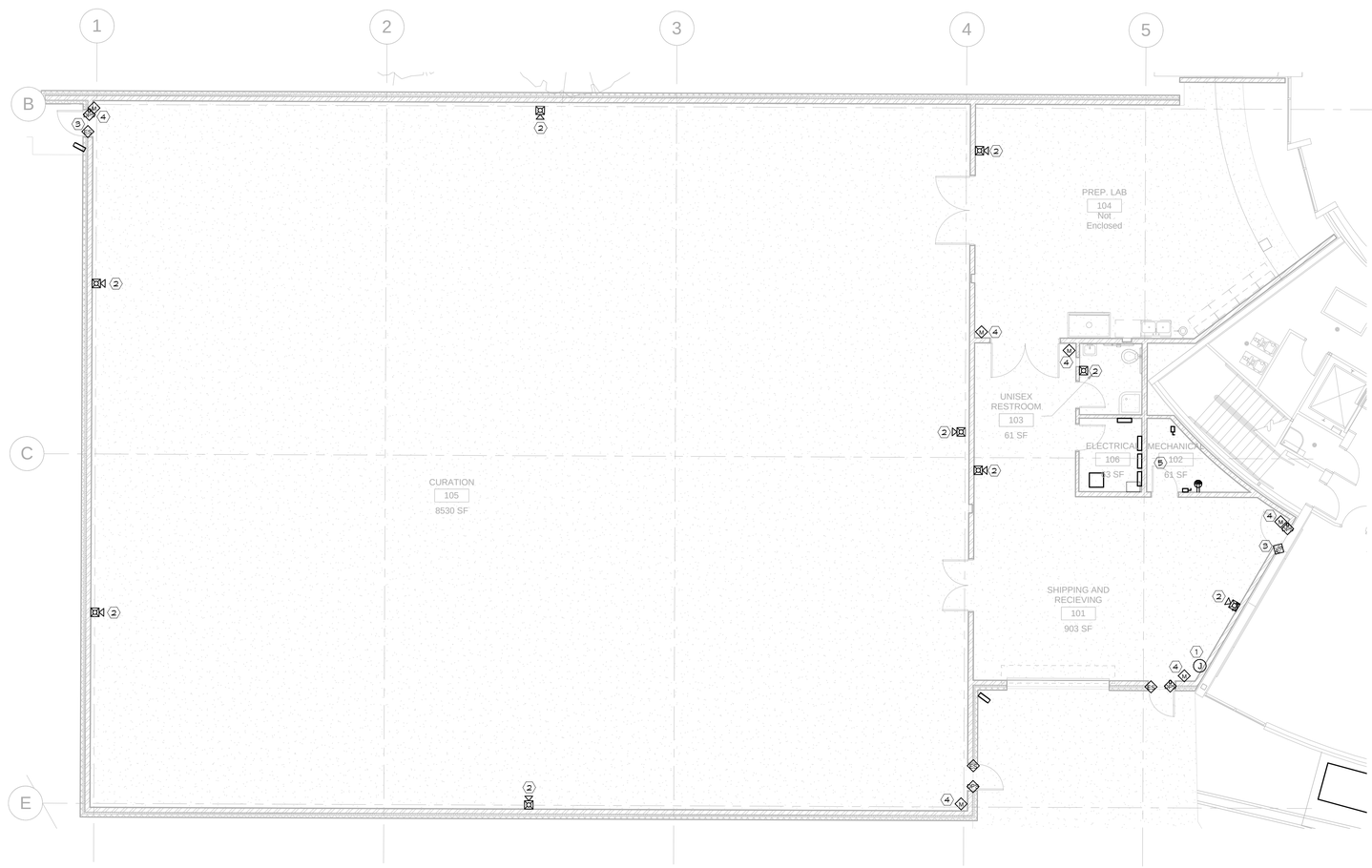

1 LEVEL 1 - SYSTEMS PLAN
1/8" = 1'-0"

#	KEYNOTE:
1	JUNCTION BOX FOR SECURITY PANEL/PAD. COORDINATE EXACT LOCATION WITH SWAINS SECURITY.
2	NON ADDRESSABLE FIRE ALARM DEVICE. COORDINATE ALL FIRE ALARM WITH MOUNTAIN ALARM. ALL FIRE ALARM WIRE MUST BE RUN IN CONDUIT.
3	SEE DETAIL F/E601 FOR TYPICAL SECURITY DOOR DETAIL. ALL SECURITY WIRE MUST BE RUN IN CONDUIT.
4	MOTION DETECTOR TO BE TIED INTO ACCESS CONTROL SYSTEM. COORDINATE EXACT REQUIREMENTS WITH SWAINS SECURITY. ALL WIRES MUST BE RUN IN 3/4" CONDUIT MIN.
5	SECURITY CAMERA POWER SUPPLY. COORDINATE EXACT LOCATION WITH SWAINS SECURITY.

GENERAL NOTES:

1. ALL WIRES IN ENTIRE PROJECT MUST BE RUN IN CONDUIT.
2. FOR STEEL RACEWAY INSTALLED IN CONTACT WITH SOIL, PROVIDE RIGID OR IMC PVC COATED OR WRAPPED RACEWAYS, FITTING, ETC.
3. PROVIDE A MINIMUM 3/4" RACEWAYS.
4. PROVIDE FIVE CAPPED SPARE 3/4" CONDUITS FROM EACH SECTION OF A PANELBOARD INTO THE CEILING AND FLOOR SPACE. IF THE FLOOR SPACE IS NOT ACCESSIBLE, PROVIDE AN ADDTIONAL 3/4" CONDUIT FROM EACH SECTION OF A BRANCH PANELBOARD INTO THE CEILING. PROVIDE 200-LB NYLON PULL CORD IN ALL EMPTY CONDUIT.
5. PROVIDE A MIN OF #12 COPPER CONDUCTORS.
6. PROVIDE SEPARATE NEUTRALS FOR ALL GFI CIRCUIT BREAKERS AND FOR THE LOAD SIDE OF FEED THRU GFCI OUTLETS.
7. PROVIDE LIGHTNING (SURGE) ARRESTERS FOR VOLTAGE TRANSFORMERS AND SWITCHGEAR LOCATED ABOVE GROUND OUT SIDE.
8. SET OVERCURRENT AND GROUND FAULT PROTECTION BASED UPON FAULT CURRENT PROTECTION AND COORDINATION STUDY PREPARED BY A/E.
9. USE FEED THRU GFCI OUTLETS ONLY IF THE OUTLET SERVED IS LOCATED IN THE SAME ROOM.
10. PROVIDE ADDRESSABLE FIRE ALARM SYSTEMS. INSTALL "CLASS A" LOOPED SYSTEMS OR AS APPROVED BY THE FIRE MARSHAL. DO NOT USE THE FOLLOWING COMPONETS UNLESS APPROVED BY THE DIRECTOR; ZONED FIRE ALARM PANELS, IONIZATION SMOKE DETECTORS.
11. FOR COMMUNICATION OUTLETS: PROVIDE A 1" EMT CONDUIT WITH A DOUBLE (4" SQUARE) BOX AND SINGLE-GANG MUD RING AT EACH COMMUNICATION OUTLET LOCATION. **NO DASIE CHAIN ALLOWED**. CONDUIT FROM WORKSTATION LOCATIONS SHOULD ROUTE TO A CABLETRAY OR HOME RUN TO TELEGOM. ROOM.

revisions: num.	description	date

date: FEB. 15, 2012
project number: 11199.01
drawn by: T.H.
checked by: C.W.
project status: 100% DFCM REVIEW
original drawing is 24" x 36"
file path: Z:\Active Projects\11199.01 - Vernal Field House of Natural History\Models\Architect.rvt

The drawings, specifications and other documents, including electronic media, prepared by Babcock Design Group, Inc. are instruments of service and are the property of Babcock Design Group, Inc. They are deemed to be the property of the owner for the purpose of completing the project for which they were prepared. Any other use, reuse, or other purpose is prohibited without the express written consent of Babcock Design Group, Inc. Any modifications of the completed project, not part thereof may be accepted, reproduced, photographed, duplicated or used in any way for any other project without the written consent of Babcock Design Group, Inc. Any reuse or alterations shall relieve the undersigned of responsibility for any consequences arising therefrom.
COPYRIGHT © 2009 BABCOCK DESIGN GROUP

stamp:

REGISTERED PROFESSIONAL ENGINEER
No. 171794
STEPHEN P. OLSEN
STATE OF UTAH

VERNAL FIELD HOUSE OF NATURAL HISTORY MUSEUM - ADDDITION

for:

UTAH STATE PARKS AND RECREATION/UINTAH COUNTY

490 EAST MAIN STREET VERNAL, UTAH 84078

www.babcockdesign.com

JWL + BDG Architecture

sheet title:
LEVEL 1 - SYSTEMS PLAN

sheet number:
E401

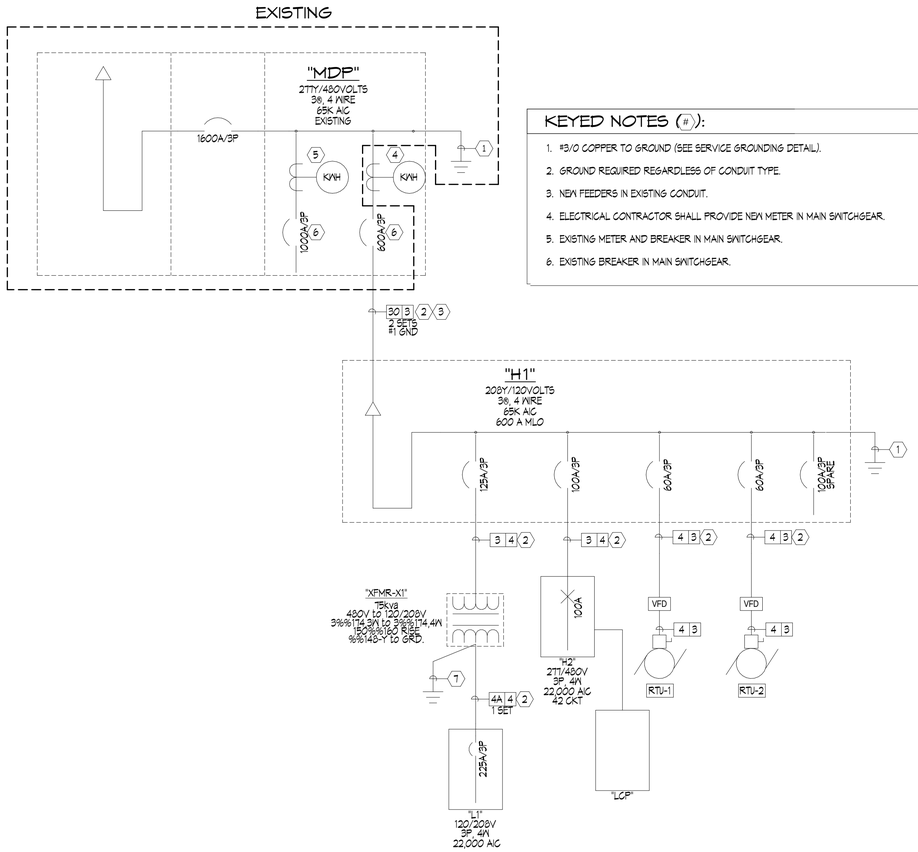

1 ONE LINE DIAGRAM

KEYED NOTES (#):

1. #3/0 COPPER TO GROUND (SEE SERVICE GROUNDING DETAIL).
2. GROUND REQUIRED REGARDLESS OF CONDUIT TYPE.
3. NEW FEEDERS IN EXISTING CONDUIT.
4. ELECTRICAL CONTRACTOR SHALL PROVIDE NEW METER IN MAIN SWITCHGEAR.
5. EXISTING METER AND BREAKER IN MAIN SWITCHGEAR.
6. EXISTING BREAKER IN MAIN SWITCHGEAR.

CONDUIT & WIRE SCHEDULE

SYMBOL SIZE	SYMBOL QTY	CONDUIT	WIRE SIZE & TYPE	GROUND	AMPS	REMARKS
12	2	¾"	#12 THHN CU	#12 THHN CU	25	
	3	¾"				
	4	¾"				
10	2	¾"	#10 THHN CU	#10 THHN CU	30	
	3	¾"				
	4	¾"				
8	2	¾"	#8 THHN CU	#10 THHN CU	40	
	3	¾"				
	4	¾"				
6	2	¾"	#6 THHN CU	#8 THHN CU	55	
	3	¾"				
	4	¾"				
4	2	¾"	#4 THHN CU	#8 THHN CU	70	
	3	¾"				
	4	1¼"				
3	2	1"	#3 THHN CU	#8 THHN CU	100	
	3	1"				
	4	1¼"				
2	2	1¼"	#2 THHN CU	#6 THHN CU	115	
	3	1¼"				
	4	1½"				
1	2	1½"	#1 THHN CU	#6 THHN CU	130	
	3	1½"				
	4	1½"				
1A	2	1½"	#1/0 THHN CU	#6 THHN CU	150	
	3	1½"				
	4	1½"				
2A	2	1½"	#2/0 THHN CU	#6 THHN CU	175	
	3	1½"				
	4	2"				
3A	2	1½"	#3/0 THHN CU	#6 THHN CU	200	
	3	2"				
	4	2"				
4A	2	2"	#4/0 THHN CU	#4 THHN CU	230	
	3	2"				
	4	2½"				
25	2	2"	#250 KMCM XHHN CU	#4 XHHN CU	255	
	3	2"				
	4	2½"				
30	2	2½"	#300 KMCM XHHN CU	#3 XHHH CU	285	
	3	3"				
	4	3"				
35	2	2"	#350 KMCM XHHN CU	#3 XHHH CU	310	
	3	3"				
	4	3"				
40	2	2½"	#400 KMCM XHHN CU	#3 XHHH CU	335	
	3	3"				
	4	3"				
50	2	3"	#500 KMCM XHHN CU	#3 XHHH CU	380	
	3	4"				
	4	4"				
60	2	3"	#600 KCM XHHN CU	#3 XHHH CU	420	
	3	4"				
	4	4"				

EXAMPLE:

3A | 4 =(4)-#3/0 THHN/THWN + (1)#6 THHN/THWN GND, 2"CONDUIT

50 | 4 2 SETS 1/A GND. =(4)-#500kmcm XHHN CU + (1)-#1/0 XHHN CU GND, 2 SETS, PARALLEL FEEDERS

NOTES:
1. PARALLEL RUNS REQUIRE A LARGER GROUND WIRE PER CONDUIT - SEE NATIONAL ELECTRICAL CODE.
2. WHERE THHN CONDUCTORS SHALL BE RUN UNDERGROUND, PROVIDE THWN OR XHHW INSULATION IN LIEU OF THHN OR XHHN INSULATION ON ALL UNDERGROUND CONDUCTORS.

TELEPHONE RISER NOTES:

1. EXISTING TELEPHONE BOARD. ELECTRICAL CONTRACTOR SHALL UTILIZE EXISTING 4" CONDUIT STUBBED OUT FROM SECOND FLOOR ELECTRICAL ROOM.
2. ELECTRICAL CONTRACTOR SHALL PROVIDE CONDUIT WITH PULL STRING ONLY. CABLES, AND TERMINATIONS.

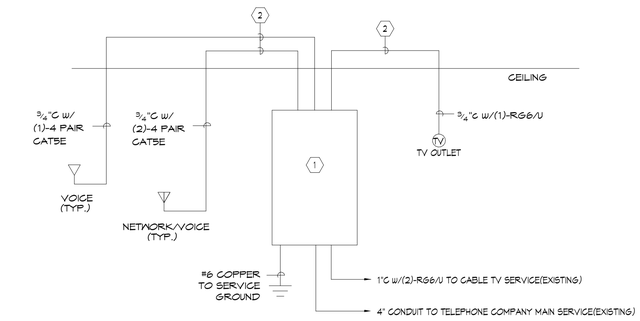

2 TELEPHONE RISER DIAGRAM

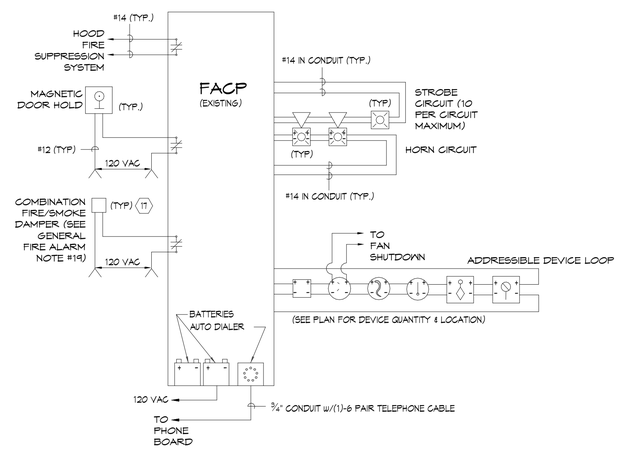

3 FIRE ALARM DIAGRAM

FIRE ALARM GENERAL NOTES:

1. COORDINATE FIRE ALARM DEVICES WITH LIGHTING FIXTURES, SPEAKERS, GRILLS, ETC.
2. DO NOT INSTALL SMOKE DETECTORS WITHIN 3'-0" OF ANY MECHANICAL GRILL.
3. FIRE ALARM CONTROL PANEL AND ANNUNCIATOR ENCLOSURES SHALL CONTAIN A FLANGE AROUND PERIMETER TO FACILITATE AND IMPROVE THE AESTHETIC TRANSITION FROM ENCLOSURE TO SHEETROCK.
4. VERIFY ANY POTENTIAL ADDITIONAL REQUIREMENTS WITH THE AUTHORITY HAVING JURISDICTION.
5. DUCT SMOKE DETECTORS SHOWN FOR REFERENCE.COORDINATE DUCT SMOKE DETECTOR LOCATIONS WITH MECHANICAL PLANS.
6. PLANS ARE BASED UPON 99 MONITOR AND CONTROL DEVICES PER ADDRESSABLE LOOP. OTHER CONFIGURATIONS ARE ACCEPTABLE SUBJECT TO CONTRACTOR ALLOWING FOR INCREASED WIRING CONFIGURATION. MAXIMUM INITIAL DEVICES PER LOOP SHALL NOT EXCEED 75% MAXIMUM ALLOWABLE.
7. PLANS ARE BASED UPON THE WIRING SCHEDULE SHOWN. WHERE MANUFACTURER'S REQUIREMENTS EXCEED REQUIREMENTS SHOWN, INCLUDE ADDITIONAL ASSOCIATED COSTS & SUBMITTAL DRAWINGS INDICATING NEW WIRING CONFIGURATION.
8. PLANS ARE BASED UPON 10 TOTAL STROBE LIGHTS (WHATEVER COMBINATION HOR.STROBE OR INDIVIDUAL STROBES) PER CIRCUIT. PROVIDE FIRE ALARM HORN ON EXTERIOR OF BUILDING. SELECT STROBES BASED UPON ROOM SIZE AND MANUFACTURER.
9. FLOW & TAMPER CONFIGURATION BASED UPON FIRE SPRINKLER DESIGN CONCEPT. FIELD VERIFY ACTUAL REQUIREMENTS. INCLUDE ANY ADDITIONAL MONITORING DEVICES REQUIRED BY ACTUAL REQUIREMENTS.
10. HEAT DETECTORS WHEN INSTALLED IN ELEVATOR SHAFTS OR MECHANICAL ROOMS FOR ELEVATOR SHUT DOWN SHALL HAVE LOCKED HEAT DETECTOR WITH LOWER RESPONSE TIME INDEX THAN THE SPRINKLER HEAD.
11. ALL OUTPUT DEVICES ARE DESIGNED ON SYSTEMS WITH 2 AMP POWER SUPPLY.
12. HORN/STROBE BASED ON 120 MILLIAMPS, DOOR HOLDERS (IF REQUIRED) BASED ON 70 MILLIAMPS.
13. BATTERY CAPACITY TO BE ADEQUATE TO OPERATE 15 MINUTES AFTER 60 HOURS PLUS 25% SPARE CAPACITY.
14. VFD REQUIRES TWO RELAYS, ONE FOR SMOKE CONTROL, ONE SPARE.
15. RUN SPARE LOOPS IN SAME CONDUIT.
16. PROVIDE DUCT DETECTOR AT EACH FLOOR PRIOR TO CONNECTION TO A COMMON RETURN & PRIOR TO RE-CIRCULATING OR REFRESH AIR INLET IN AIR RETURN SYSTEMS OVER 15,000 CFM CAPACITY & SERVING MORE THAN ONE STORY.
17. PROVIDE MANUAL PULL STATIONS IN BOILER ROOM.
18. INSTALL DUCT DETECTORS PER NFPA 72 REQUIREMENTS & PROVIDE ADDITIONAL DUCT DETECTORS DEPENDING UPON FINAL DUCT ARRANGEMENT.
19. PROVIDE AND INSTALL SMOKE DETECTOR AND/OR DUCT SMOKE DETECTOR WITHIN 5'-0' OF A SMOKE/FIRE DAMPER AS PER REQUIREMENTS OF THE INTERNATIONAL BUILDING CODE.

revisions: num.	description	date

date: FEB. 15, 2012
project number: 11199.01
drawn by: T.H.
checked by: C.W.
project status: 100% DFCM REVIEW
original drawing is 24" x 36"
Current as of: 2/14/2012, 5:47:30 PM
Revision Name: 100% DFCM REVIEW - Vernal Field House of Natural History
file path: M:\projects\11199.01 Vernal Field House of Natural History\Architecture\Electrical\E501.rvt

The drawings, specifications and other documents and designs prepared by JWL + BDG Architecture are instruments of service and are the property of Babcock Design Group, Inc. They are intended for use only in connection with the project for which they were prepared. Reproductions of drawings, specifications, and other documents prepared by JWL + BDG Architecture shall be made only in accordance with this notice. They are intended for use only for the purpose of constructing, maintaining, and operating the project. Any other use, reproduction, modification of the contents of the prepared projects, for part thereof may be unlawful, unauthorized, and prohibited. Any reproduction, modification, or other use of the prepared projects shall be at the sole risk of the person or entity making such use, and such person or entity shall indemnify and hold harmless JWL + BDG Architecture, or its agents, or employees against claims arising from such use, unless the prior written consent of Babcock Design Group, Inc.
COPYRIGHT © 2009 BABCOCK DESIGN GROUP

stamp: REGISTERED PROFESSIONAL ENGINEER No. 171794 STEPHEN P. OLSEN STATE OF UTAH

VERNAL FIELD HOUSE OF NATURAL HISTORY MUSEUM - ADDDITION

for:

UTAH STATE PARKS AND RECREATION/UINTAH COUNTY

490 EAST MAIN STREET VERNAL, UTAH 84078

www.babcockdesign.com

JWL + BDG Architecture

sheet title: ONE LINE DIAGRAM

sheet number: E501

Branch Panel: L1

Location: ELECTRICAL 106 | **Volts:** 120/208 Wye | **A.I.C. Rating:** 22,000
Supply From: X2 | **Phases:** 3 | **Mains Type:**
Mounting: Recessed | **Wires:** 4 | **Mains Rating:** 225 A
Enclosure: Type 1 | **MCB Rating:**

Notes:

CKT	AMP	POLES	CIRCUIT NAME	Wire Size	USE	LOAD	A		B		C		LOAD	USE	Wire Size	CIRCUIT NAME	POLES	AMP	CKT
1	20 A	2	HOOD	2-#12, 1-#12,	Power;	2000 W	1000 VA	540 VA					540 W	Recept	1-#12, 1-#12,	RCPT - LAB	1	20 A	2
3	--	--	--	--	--	--			1000 VA	180 VA			180 W	Recept	1-#12, 1-#12,	RCPT - LAB SINK	1	20 A	4
5	20 A	1	RCPT - WIREMOLD	1-#12, 1-#12,	Recept	180 W					180 VA	540 VA	540 W	Recept	1-#12, 1-#12,	RCPT - LAB	1	20 A	6
7	20 A	1	RCPT - CEILING	1-#12, 1-#12,	Recept	180 W	180 VA	180 VA					180 W	Recept	1-#12, 1-#12,	RCPT - CEILING	1	20 A	8
9	20 A	1	RCPT - SHIPPING	1-#12, 1-#12,	Recept	720 W			720 VA	180 VA			180 W	Recept	1-#12, 1-#12,	RCPT - MECH/ELEC.	1	20 A	10
11	20 A	1	RCPT - CURATION	1-#12, 1-#12,	Recept	900 W					900 VA	900 VA	900 W	Recept	1-#12, 1-#12,	RCPT - CURATION	1	20 A	12
13	20 A	1	RCPT - CURATION	1-#12, 1-#12,	Recept	720 W	720 VA	180 VA					180 W	Recept	1-#12, 1-#12,	RCPT - UNISEX RESTROOM	1	20 A	14
15	20 A	1	Receptacle	1-#12, 1-#12,	Recept	1000 W			1000 VA	696 VA			696 W	Other	1-#1, 1-#1,	Other	1	20 A	16
17	30 A	2	EWH-1	2-#10,	HVAC	4500 W					2250 VA	200 VA	200 W	Other	1-#6, 1-#6,	P-1	1	20 A	18
19	--	--	--	--	--	--	2250 VA	2250 VA					4500 W	HVAC	2-#12, 1-#12,	AIR COMPRESSOR	2	20 A	20
21										2250 VA			--	--	--	--	--	--	22
23																			24
25																			26
27																			28
29																			30
31																			32
33																			34
35																			36
37																			38
39																			40
41																			42
						Total Load:	7300 VA		6026 VA		4970 VA								
						Total Amps:	62 A		52 A		41 A								

GENERAL NOTES:
1. ALL INSULATION ON CONDUCTORS TO BE THHN UNLESS NOTED OTHERWISE. INSULATION ON ALL UNDERGROUND CONDUCTORS SHALL BE THHW. 2. RECEPTACLE LOAD CACULATED AS PER SECTION 220 OF THE NATIONAL ELECTRICAL CODE. 3. PANEL COVER SHALL BE FIEL MARKED FOR FLASH PROTECTION WITH A PERMANENT LABLE AS REQUIRED BY THE NATIONAL ELECTRICAL CODE SECTION 110. LABEL SHALL READ AS FOLLOWS: "DANGER: POTENTIAL ARC FLASH HAZZARD".

Load Classification	Connected Load	Demand Factor	Estimated Demand	Panel Totals	
HVAC	9000 VA	100.00%	9000 VA		
Other	896 VA	100.00%	896 VA	**Total Conn. Load:**	18296 VA
Power	0 VA	0.00%	0 VA	**Total Est. Demand:**	18296 VA
Receptacle	8400 VA	100.00%	8400 VA	**Total Conn.:**	51 A
				Total Est. Demand:	51 A

Branch Panel: H1

Location: ELECTRICAL 106 | **Volts:** 480/277 Wye | **A.I.C. Rating:** 65,000
Supply From: | **Phases:** 3 | **Mains Type:**
Mounting: Recessed | **Wires:** 4 | **Mains Rating:** 600 A
Enclosure: Type 1 | **MCB Rating:**

Notes:

CKT	AMP	POLES	CIRCUIT NAME	Wire Size	USE	LOAD	A		B		C		LOAD	USE	Wire Size	CIRCUIT NAME	POLES	AMP	CKT
1	125 A	3	X2	3-#1/0,	HVAC;	18296 W	7300 VA	8828 VA					25228 W	Lightin	3-#1, 1-#1,	H2	3	100 A	2
3	--	--	--	--	--	--			6026 VA	7990 VA			--	--	--	--	--	--	4
5	--	--	--	--	--	--					4970 VA	8790 VA	--	--	--	--	--	--	6
7	60 A	3	RTU-2	3-#4, 1-#4,	HVAC	9000 W	3000 VA	3000					9000 W	HVAC	3-#4, 1-#4,	RTU-1	3	60 A	8
9	--	--	--	--	--	--			3000 VA	3000 VA			--	--	--	--	--	--	10
11	--	--	--	--	--	--					3000	3000 VA	--	--	--	--	--	--	12
13	60 A	3	EF-1	3-#4, 1-#4,	HVAC	3000 W	1000 VA												14
15	--	--	--	--	--	--			1000 VA										16
17	--	--	--	--	--	--					1000 VA								18
19																			20
21																			22
23																			24
25																			26
27																			28
29																			30
						Total Load:	23128 VA		21016 VA		20760 VA								
						Total Amps:	84 A		76 A		75 A								

GENERAL NOTES:
1. ALL INSULATION ON CONDUCTORS TO BE THHN UNLESS NOTED OTHERWISE. INSULATION ON ALL UNDERGROUND CONDUCTORS SHALL BE THHW. 2. RECEPTACLE LOAD CACULATED AS PER SECTION 220 OF THE NATIONAL ELECTRICAL CODE. 3. PANEL COVER SHALL BE FIEL MARKED FOR FLASH PROTECTION WITH A PERMANENT LABLE AS REQUIRED BY THE NATIONAL ELECTRICAL CODE SECTION 110. LABEL SHALL READ AS FOLLOWS: "DANGER: POTENTIAL ARC FLASH HAZZARD".

Load Classification	Connected Load	Demand Factor	Estimated Demand	Panel Totals	
HVAC	30000 VA	100.00%	30000 VA		
Lighting	7118 VA	125.00%	8898 VA	**Total Conn. Load:**	64904 VA
Lighting - Exterior	490 VA	125.00%	613 VA	**Total Est. Demand:**	58606 VA
Other	896 VA	100.00%	896 VA	**Total Conn.:**	78 A
Power	0 VA	0.00%	0 VA	**Total Est. Demand:**	70 A
Receptacle	26400 VA	68.94%	18200 VA		

Branch Panel: H2

Location: ELECTRICAL 106 | **Volts:** 480/277 Wye | **A.I.C. Rating:** 22,000
Supply From: H1 | **Phases:** 3 | **Mains Type:**
Mounting: Recessed | **Wires:** 4 | **Mains Rating:** 100 A
Enclosure: Type 1 | **MCB Rating:**

Notes:

CKT	AMP	POLES	CIRCUIT NAME	Wire Size	USE	LOAD	A		B		C		LOAD	USE	Wire Size	CIRCUIT NAME	POLES	AMP	CKT
1	20 A	1	LTG - RECEIVING/SHIP	1-#12, 1-#12,	Lightin	760 W	800 VA	950 VA					903 W	Lightin	1-#12, 1-#12,	LTG - CURATION	1	20 A	2
3	20 A	1	LTG - CURATION	1-#12, 1-#12,	Lightin	713 W			750 VA	750 VA			713 W	Lightin	1-#12, 1-#12,	LTG - CURATION	1	20 A	4
5	20 A	1	LTG - LAB	1-#12, 1-#12,	Lightin	1368 W					1440 VA	950 VA	903 W	Lightin	1-#12, 1-#12,	LTG - CURATION	1	20 A	6
7	20 A	1	LTG - CURATION	1-#12, 1-#12,	Lightin	903 W	950 VA	128 VA					122 W	Lightin	1-#12, 1-#12,	LTG - REST/MECH	1	20 A	8
9	20 A	1	LTG - EXTERIOR	1-#12, 1-#12,	Lightin	266 W			280 VA	210 VA			200 W	Lightin	1-#12, 1-#12,	LTG - EXTERIOR	1	20 A	10
11	20 A	1	LTG - LAB	1-#12, 1-#12,	Lightin	380 W					400 VA	6000 VA	18000 W	Recept	3-#3, 1-#3,	WELDER	3	80 A	12
13								6000					--	--	--	--	--	--	14
15										6000 VA			--	--	--	--	--	--	16
17																			18
19																			20
21																			22
23																			24
25																			26
27																			28
29																			30
31																			32
33																			34
35																			36
37																			38
39																			40
41																			42
						Total Load:	8828 VA		7990 VA		8790 VA								
						Total Amps:	32 A		29 A		32 A								

GENERAL NOTES:
1. ALL INSULATION ON CONDUCTORS TO BE THHN UNLESS NOTED OTHERWISE. INSULATION ON ALL UNDERGROUND CONDUCTORS SHALL BE THHW. 2. RECEPTACLE LOAD CACULATED AS PER SECTION 220 OF THE NATIONAL ELECTRICAL CODE. 3. PANEL COVER SHALL BE FIEL MARKED FOR FLASH PROTECTION WITH A PERMANENT LABLE AS REQUIRED BY THE NATIONAL ELECTRICAL CODE SECTION 110. LABEL SHALL READ AS FOLLOWS: "DANGER: POTENTIAL ARC FLASH HAZZARD".

Load Classification	Connected Load	Demand Factor	Estimated Demand	Panel Totals	
Lighting	7118 VA	125.00%	8898 VA		
Lighting - Exterior	490 VA	125.00%	613 VA	**Total Conn. Load:**	25608 VA
Receptacle	18000 VA	77.78%	14000 VA	**Total Est. Demand:**	23510 VA
				Total Conn.:	31 A
				Total Est. Demand:	28 A

revisions:

num.	description	date
△		
△		
△		
△		
△		
△		
△		

date: FEB. 15, 2012
project number: 11199.01
drawn by: T.H.
checked by: C.W.
project status: 100% DFCM REVIEW

current as of: 2/14/2012 5:47:30 PM — original drawing is 24" x 36"
file path: F:\wORK\11199.00.01 - Vernal Field House of Natural History Museum\Electrical.rvt

The drawings, specifications, designs, and images represented herein are considered by law the architect's instruments of service and are the property of Babcock Design Group, Inc. They are available for limited review and evaluation by clients, consultants, contractors, government agencies, vendors, and office personnel only in accordance with this notice. They are intended for use only for the project specified and are to be used for no other purpose or project including additions to or modification of the completed project. No part thereof may be copied, reproduced, photographed, modified, published, uploaded, transmitted, disclosed, sold, distributed to others in any way including in digital form, or otherwise used without the prior written consent of Babcock Design Group, Inc.

COPYRIGHT © 2009 BABCOCK DESIGN GROUP

stamp: REGISTERED PROFESSIONAL ENGINEER — No. 171794 — STEPHEN P. OLSEN — STATE OF UTAH

VERNAL FIELD HOUSE OF NATURAL HISTORY MUSEUM - ADDDITION

for:

UTAH STATE PARKS AND RECREATION/UINTAH COUNTY

490 EAST MAIN STREET VERNAL, UTAH 84078

JWL + BDG Architecture

www.babcockdesign.com

sheet title: ELECTRICAL SCHEDULES

sheet number: E502

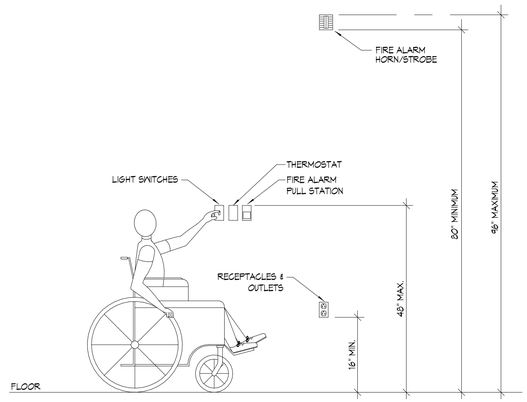

A E601 MOUNTING HEIGHTS DETAIL

NOTES:

1. TYPICAL FOR WOOD AND METAL STUD ROUGH IN.
2. PLASTER RINGS NOT SHOWN.
3. LOCATE ALL OUTLET BOXES IN ACCORDANCE WITH ARCHITECTURAL AND MECHANICAL DRAWINGS, AND WITH ALL APPLICABLE SHOP DRAWINGS.
4. IN ACCORDANCE WITH INTERNATIONAL BUILDING CODE OUTLETS ON OPPOSITE SIDES OF WALLS OR PARTITIONS IN THE SAME STUD SPACE MUST BE SEPARATED BY A MINIMUM OF 24" HORIZONTAL DISTANCE.

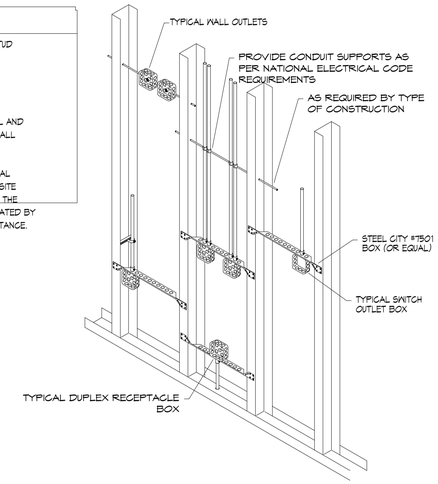

B E6.1 TYPICAL ROUGH-IN REQUIREMENTS DETAIL

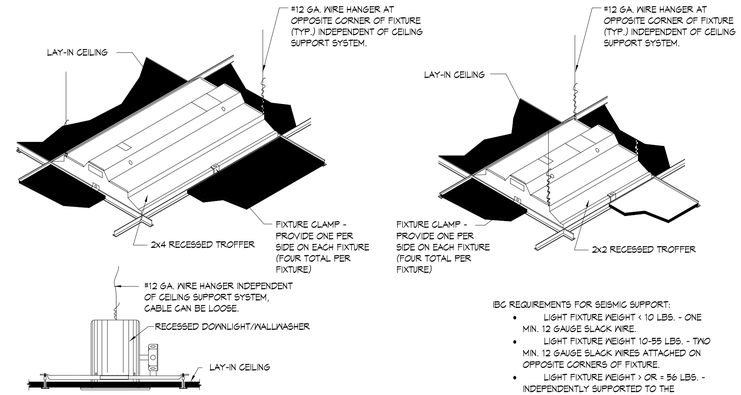

IBC REQUIREMENTS FOR SEISMIC SUPPORT:

- LIGHT FIXTURE WEIGHT < 10 LBS. - ONE MIN. 12 GAUGE SLACK WIRE.
- LIGHT FIXTURE WEIGHT 10-55 LBS. - TWO MIN. 12 GAUGE SLACK WIRES ATTACHED ON OPPOSITE CORNERS OF FIXTURE.
- LIGHT FIXTURE WEIGHT > OR = 56 LBS. - INDEPENDENTLY SUPPORTED TO THE STRUCTURE SLACK WIRES ARE NOT REQUIRED.

C E601 LAY-IN GRID FIXTURE SEISMIC MOUNTING DETAILS

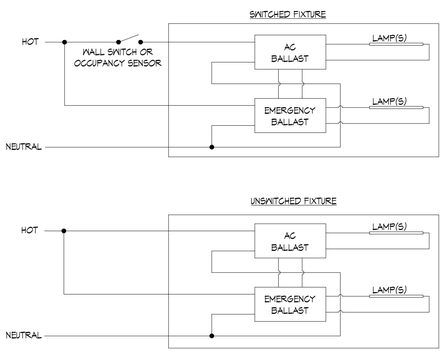

D E6.1 EMERGENCY BALLAST OPERATION DETAIL

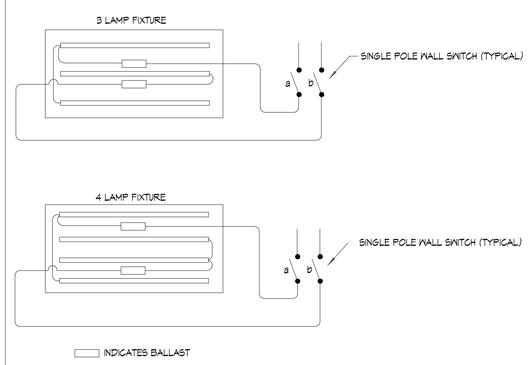

E E601 EMERGENCY BALLAST OPERATION DETAIL

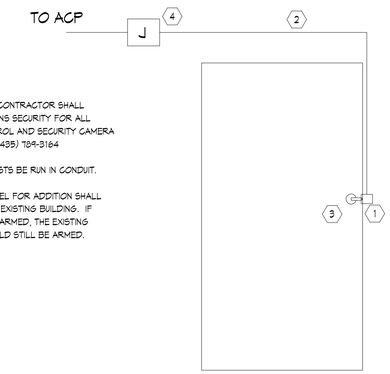

* ELECTRICAL CONTRACTOR SHALL CONTACT SWANS SECURITY FOR ALL ACCESS CONTROL AND SECURITY CAMERA INTEGRATION. (435) 789-3164

*ALL WIRES MUSTS BE RUN IN CONDUIT.

*SECURITY PANEL FOR ADDITION SHALL NOT CONTROL EXISTING BUILDING. IF ADDITION IS UNARMED, THE EXISTING BUILDING SHOULD STILL BE ARMED.

ACCESS DOOR NOTES

1. INTEGRATED ELECTRIC STRIKE/CARD READER PROVIDED BY SECTION 087100.
2. WIRE FROM JUNCTION BOX TO ELECTRIC STRIKE COORDINATE WITH SECURITY INTEGRATOR
3. SECURITY INTEGRATOR MUST BE CERTIFIED FOR LOCK INSTALLATION.
4. JUNCTION BOX SHALL BE PROVIDED BY ELECTRICAL CONTRACTOR.

F E601 TYPICAL SINGLE DOOR SECURITY ACCESS

NOTE:

TYPICAL DETAILS SHOWING GENERAL FIRE STOPPING PROCEDURE. ACTUAL PROCEDURE DEPENDS UPON ANNULAR SPACE BETWEEN PIPE AND/OR INSULATION AND OPENING. FOLLOW MANUFACTURER'S INSTRUCTIONS.

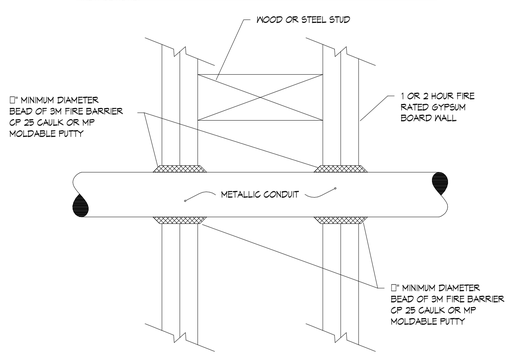

G E6.1 FIRE STOP THRU GYPSUM BOARD WALL

NOTE:

TYPICAL DETAILS SHOWING GENERAL FIRE STOPPING PROCEDURE. ACTUAL PROCEDURE DEPENDS UPON ANNULAR SPACE BETWEEN PIPE AND/OR INSULATION AND OPENING. FOLLOW MANUFACTURER'S INSTRUCTIONS.

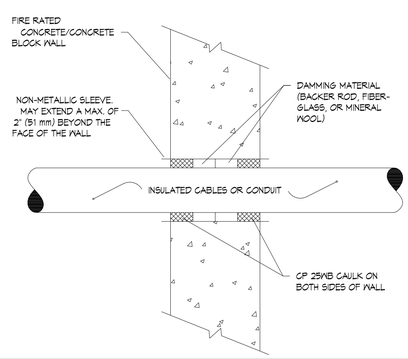

H E601 FIRESTOP THRU CONCRETE/MASONRY WALL

NOTE:

TYPICAL DETAILS SHOWING GENERAL FIRE STOPPING PROCEDURE. ACTUAL PROCEDURE DEPENDS UPON ANNULAR SPACE BETWEEN PIPE AND/OR INSULATION AND OPENING. FOLLOW MANUFACTURER'S INSTRUCTIONS.

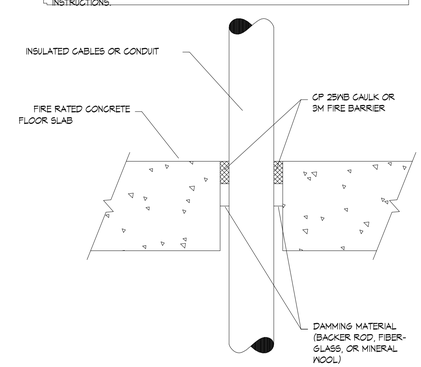

I E601 FIRESTOP THRU CONCRETE FLOOR

revisions: num.	description	date

date: FEB. 15, 2012
project number: 111991.01
drawn by: T.H.
checked by: C.W.
project status: 100% DFCM REVIEW
original drawing is 24" x 36"
Current as of: 2/14/2012, 5:47:30 PM
Plot Scale: 1:1 Plot Date: 2/15/2012 - Vernal Field House of Natural History
MaterialsBlackCat.Art

These drawings and specifications are the property of Babcock Design Group, Inc. They are intended for use on this project only and may not be used for other projects or extensions of this project without written and other personnel prior to accordance with this notice. They are provided for use only for construction purposes. Reproduction or modification of these documents without written permission is prohibited. Any modifications of the contained plans, but just beyond may be erased, reproduced, photographed, or otherwise altered without written permission from Babcock Design Group, Inc. Any alterations made to these drawings and specifications will be indicated as such and the original seal removed. Alterations to digital files, or software versions other than the one delivered, will be at the recipient's risk. Babcock Design Group, Inc.
COPYRIGHT © 2009 BABCOCK DESIGN GROUP

stamp:

REGISTERED PROFESSIONAL ENGINEER
No. 171794
STEPHEN P. OLSEN
STATE OF UTAH

VERNAL FIELD HOUSE OF NATURAL HISTORY MUSEUM - ADDDITION

for:

UTAH STATE PARKS AND RECREATION/UINTAH COUNTY

490 EAST MAIN STREET VERNAL, UTAH 84078

www.babcockdesign.com

JWL + BDG Architecture

sheet title: ELECTRICAL DETAILS

sheet number: E601

VERNAL FIELD HOUSE OF NATURAL HISTORY MUSEUM - ADDITION
CIVIL SITE PLAN/UTILITY PLAN

SCALE 1"=20'

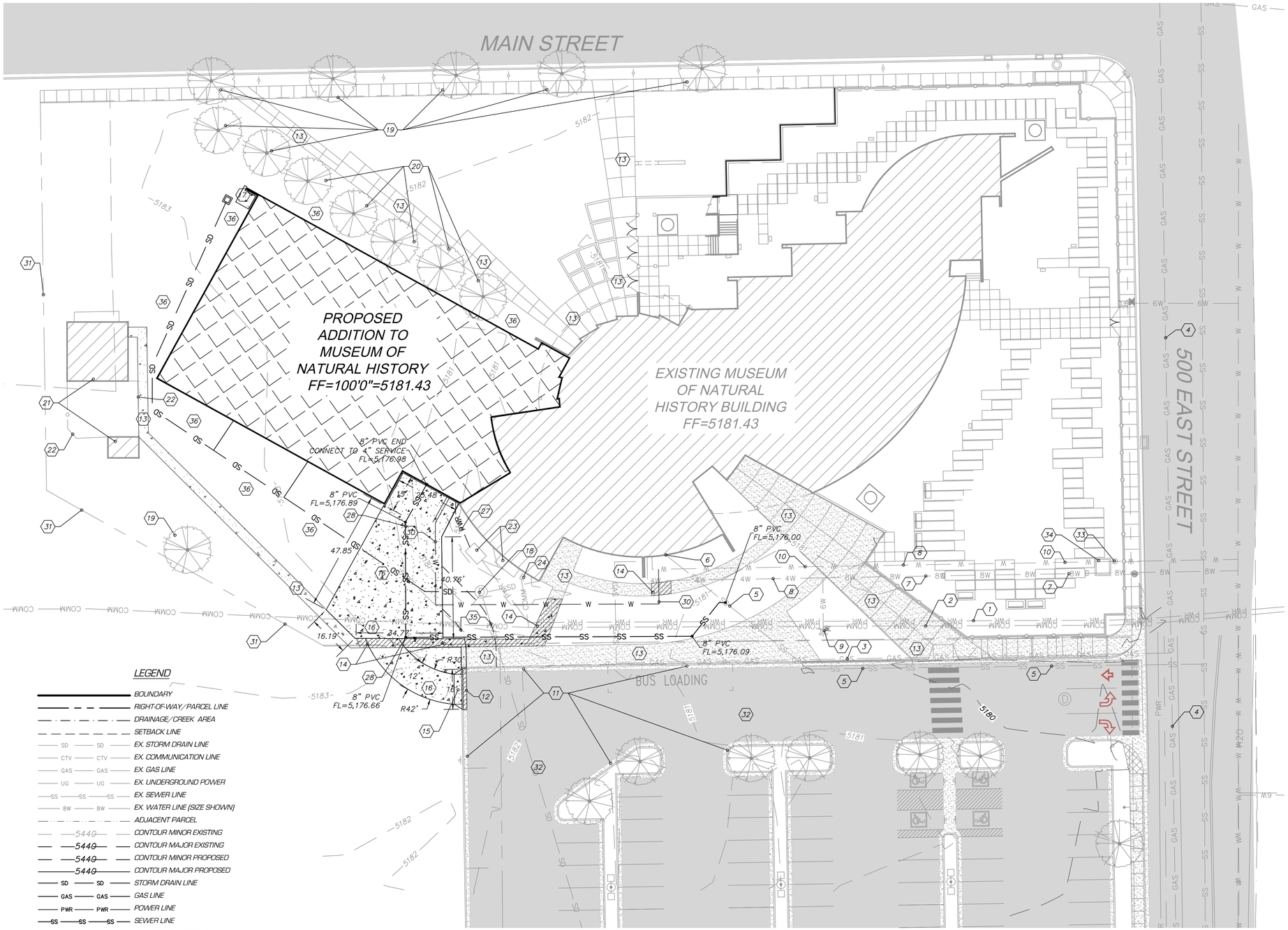

SHEET KEY NOTES:

1. EXISTING ROCKY MOUNTAIN POWER LINE. LOCATION APPROXIMATE. CONTRACTOR SHALL CALL BLUE STAKES PRIOR TO BEGINNING CONSTRUCTION.
2. EXISTING STRATA COPPER AND FIBER OPTIC COMMUNICATIONS LINE. LOCATION APPROXIMATE. CONTRACTOR SHALL CALL BLUE STAKES PRIOR TO BEGINNING CONSTRUCTION.
3. EXISTING 1-1/4" QUESTAR GAS LINE. LOCATION IS APPROXIMATE. CONTRACTOR SHALL CALL BLUE STAKES PRIOR TO BEGINNING CONSTRUCTION.
4. EXISTING 3-INCH QUESTAR GAS LINE.
5. EXISTING 6" SEWER SERVICE.
6. FLOW LINE ELEVATION OF EXISTING SEWER SERVICE = 5175.01. THIS IS BASED UPON THE AS-BUILT DRAWING FROM STANTECH ENGINEERING. CONTRACTOR SHALL VERIFY DEPTH PRIOR TO CONNECTING SEWER SERVICE.
7. EXISTING 8" DIP FIRE LINE.
8. EXISTING 4" DIP FIRE LINE.
9. EXISTING FIRE HYDRANT.
10. EXISTING 2.5" COPPER WATER SERVICE.
11. EXISTING CURB AND GUTTER TO REMAIN.
12. EXISTING CURB AND GUTTER TO BE REMOVED.
13. EXISTING SIDEWALK TO REMAIN.
14. EXISTING SIDEWALK TO BE REMOVED AND REPLACED.
15. PROPOSED DRIVE APPROACH AND CURB. SEE STANDARD DETAIL #5 ON SHEET C-500.
16. PROPOSED 6" CONCRETE DRIVEWAY. SEE STANDARD DETAIL #3 ON SHEET C-500.
17. PROPOSED 4' WIDE SIDEWALK. SEE STANDARD DETAIL ON #4 ON SHEET C-500.
18. EXISTING 6' WIDE SUMP TO REMAIN.
19. EXISTING TREES TO REMAIN.
20. EXISTING TREES TO BE REMOVED OR PRUNED.
21. EXISTING SHED TO REMAIN.
22. EXISTING FENCE TO REMAIN.
23. EXISTING POWER EQUIPMENT.
24. EXISTING TELEPHONE PEDESTAL.
25. PROPOSED STORM DRAIN SYSTEM. SEE SHEET C201
26. NOT USED.
27. PROPOSED POWER SERVICE CONDUITS. SEE MECHANICAL PLANS.
28. INSTALL 8" PVC SEWER SERVICE AT 0.5% SLOPE. SEE PLANS FOR ELEVATIONS. INSTALL BRASS CAP SEWER CLEANOUTS AT ALL BENDS. THE BRASS CAP SHALL BE FLUSH WITH THE FINISHED GROUND.
29. NOT USED.
30. PROPOSED FIRE LINE. CONTRACTOR AND FIRE ENGINEER TO VERIFY THE ADEQUACY OF THE EXISTING FIRE SYSTEM TO DETERMINE THE NEED AND SIZE OF THIS PROPOSED FIRE LINE.
31. BOUNDARY LINE OF PARCEL #050300082 BASED UPON THE ORIGINAL ALTA SURVEY.
32. EXISTING ASPHALT TO REMAIN.
33. EXISTING WATER METER.
34. EXISTING WATER VAULT.
35. ALTERNATE DRIVEWAY ACCESS.
36. INSTALL LANDSCAPING PER ARCHITECTURAL SITE PLAN DETAILS.

GENERAL NOTES:

1. THE TOPOGRAPHIC AND FEATURE SURVEY WAS PROVIDED BY CIVIL SOLUTIONS GROUP, INC. THE SCOPE OF THE SURVEY WAS TO OBTAIN TOPOGRAPHIC AND FEATURE DATA.
2. A METES AND BOUNDS SEARCH WAS CONDUCTED AT THE UINTAH COUNTY RECORDER'S OFFICE AND THE ORIGINAL ALTA SURVEY FOR THE MUSEUM PROJECT WERE REVIEWED TO DETERMINE THE APPROXIMATE BOUNDARY LINE. BASED UPON THE CAD FILE OF THE ALTA SURVEY THE PROPOSED ADDITION IS WITHIN THE PROPERTY CURRENTLY OWNED BY EITHER THE UTAH STATE DIVISION OF PARKS AND RECREATION, UTAH STATE DIVISION OF FACILITIES AND CONSTRUCTION, OR THE MUNICIPAL BUILDING AUTHORITY OF UINTAH COUNTY.
3. REFER TO THE ARCHITECTURAL PLAN FOR FLOOR PLANS OF THE PROPOSED ADDITION.
4. ROOF DRAINS FROM THE ADDITION WILL CONNECT TO THE EXISTING SUMP. THE SUMP WAS INSTALLED DURING CONSTRUCTION OF THE ORIGINAL MUSEUM BUILDING FOR STORAGE OF A FUTURE ADDITION, WHICH CONNECTS TO THE EXISTING STORM DRAIN SYSTEM IN THE PARKING LOT.
5. THE GAS, POWER, AND COMMUNICATIONS LINES ARE SHOWN BASED UPON COLLECTED MAPS FROM THE UTILITY COMPANIES, INFRASTRUCTURE LOCATIONS, AND OTHER MARKINGS ON SITE.
6. THE WASTE LINE WILL BE DRAINED INTO AN EXISTING DRAIN LINE IN THE EXISTING BUILDING.
7. THE POWER AND COMMUNICATION LINES WILL TIE INTO THE EXISTING SERVICE. SEE ELECTRICAL DRAWING FOR INFORMATION.
8. THE GAS SERVICE WILL BE COORDINATED AND SHOWN ON THE MECHANICAL PLAN.
9. THE BUILDING WILL CONNECT TO THE EXISTING FIRE SUPPRESSION SYSTEM ON THE EXISTING BUILDING.
10. FIRE DEMAND ANALYSIS:
    EXISTING BUILDING CONSTRUCTION TYPE: 5B [22,171 SF]
    PROPOSED BUILDING CONSTRUCTION TYPE 2B [11,664 SF]
    - ACCORDING TO APPENDIX B OF THE IFC 2009 THE COMBINED FIRE FLOW DEMAND IS 6,250 GPM. THE CODE ALLOWS FOR A REDUCTION OF 75% IF THE BUILDING HAS FIRE SUPPRESSION SPRINKLERS, WHICH IT DOES. THAT RESULTS IN A FIRE FLOW DEMAND OF 1,562.50 GPM.
    - ACCORDING TO APPENDIX C OF THE IFC 2009 THE REQUIRED DISTANCE FROM FIRE HYDRANTS IS 250' OR LESS FOR THE ABOVE FIRE DEMAND. THERE ARE TWO EXISTING FIRE HYDRANTS WITHIN A DISTANCE LESS THAN 250'.

LEGEND

- BOUNDARY
- RIGHT-OF-WAY/PARCEL LINE
- DRAINAGE/CREEK AREA
- SETBACK LINE
- SD — EX. STORM DRAIN LINE
- CTV — EX. COMMUNICATION LINE
- GAS — EX. GAS LINE
- UG — EX. UNDERGROUND POWER
- SS — EX. SEWER LINE
- 8W — EX. WATER LINE [SIZE SHOWN]
- ADJACENT PARCEL
- 5440 — CONTOUR MINOR EXISTING
- 5440 — CONTOUR MAJOR EXISTING
- 5440 — CONTOUR MINOR PROPOSED
- 5440 — CONTOUR MAJOR PROPOSED
- SD — STORM DRAIN LINE
- GAS — GAS LINE
- PWR — POWER LINE
- SS — SEWER LINE
- 10W — WATER LINE [SIZE SHOWN]
- EXISTING ASPHALT
- PROPOSED ASPHALT
- PROPOSED BUILDING
- 50.00 — EXISTING ELEVATION
- 50.00 — PROPOSED ELEVATION
- CONSTRUCTION LIMIT LINE
- SILT FENCE
- OPEN FACED CURB AND GUTTER
- CLOSED FACE CURB AND GUTTER

N

0 20' 40'

Know what's below. Call 811 before you dig.
BLUE STAKES OF UTAH
UTILITY NOTIFICATION CENTER, INC.
www.bluestakes.org
1-800-662-4111

civilsolutionsgroup inc.
2 NORTH MAIN SUITE 7
PROVIDENCE, UT 84321
P: 435.213.3762
F: 435.213.3778
www.civilsolutionsgroup.net

revisions:

date:	14 FEBRUARY 2012
project number:	201103
drawn by:	D. MACFARLANE
checked by:	D. MACFARLANE
project status:	CONSTRUCTION DOCUMENTS
current as of:	original drawing is 24" x 36"
file path:	C:\Users\Denny\Dropbox\JWL Projects\Uintah County Museum of Natural History\Acad\Civil\Museum CDs\C101 SITE PLAN.dwg

The drawings, specifications, details, and designs represented in these documents, as well as the intellectual property contained therein, are the property of JWL + BDG Architecture. The reproduction, modification, or distribution of these documents in whole or in part, without the express written consent of JWL + BDG Architecture, is strictly prohibited. This prohibition includes, but is not limited to, the reproduction of any portion of the drawings or specifications, including, but not limited to, any graphic representation, any electronic media, or any other medium, whether now known or hereafter developed, without the express written consent of JWL + BDG Architecture. Any violation of this prohibition will be prosecuted to the fullest extent of the law.

COPYRIGHT © 2009 BABCOCK DESIGN GROUP

PROFESSIONAL ENGINEER No. 7630848-2202 DANIEL Y. MACFARLANE 02-14-2012 STATE OF UTAH

stamp:

VERNAL FIELD HOUSE OF NATURAL HISTORY MUSEUM - ADDITION

for:

UTAH STATE PARKS AND RECREATION/ UINTAH COUNTY

470 EAST MAIN STREET VERNAL, UTAH 84078

JWL + BDG Architecture
52 exchange place salt lake city, ut 84111 t 801.531.1146 f 801.363.3733 www.babcockdesign.com

sheet title: CIVIL SITE PLAN/UTILITY PLAN

sheet number: C101