CODE ANALYSIS

APPLICABLE CODES

	Year		Year
International Building Code	2012	National Electrical Code	2011
International Mechanical Code	2012	Uniform Code for	
International Plumbing Code	2012	Building Conservation	
International Fire Code	2012	ADA Accessibility	
International Energy		Guidelines	
Conservation Code	2012		

A. Occupancy and Group: _____ _____ _____ _____ _____

Change in Use: Yes _____ No __X__ Mixed Occupancy: Yes __X__ No _____
Special Use and Occupancy (e.g. High Rise, Covered Mall): BOILER PLANT

B. Seismic Design Category: _____ Design Wind Speed: __NA__ mph

C. Type of Construction (circle one):

I/A I/B II/A II/B III/A III/B IV/HT V/A V/B

D. Fire Resistance Rating Requirements for the Exterior Walls based on the fire separation distance (in hours): EXISTING BUILDING

North: _____ South: _____ East: _____ West: _____

E. Mixed Occupancies: __X__ Nonseparated Uses: _____

F: Sprinklers:

Required: __X__ Provided: __X__ Type of Sprinkler System: WET

G: Number of Stories: __NA__ Building Height: NA-EXISTING BUILDING

H: Actual Area per Floor (square feet): NA-EXISTING BUILDING

I: Tabular Area: NA-EXISTING BUILDING

J: Area Modifications: NONE-REPLACING EXISTING BOILERS

a) $A_a = A_t + \left[\frac{A_t\, I_f}{100}\right] + \left[\frac{A_t\, I_s}{100}\right]$ $\qquad I_f = 100\left[\frac{F}{P} - 0.25\right]\frac{W}{30}$

b) Sum of the Ratio Calculations for Mixed Occupancies:

$\frac{\text{Actual Area}}{\text{Allowable Area}} \leq 1$

c) Total Allowable Area for:

1) One Story: _____
2) Two Story: $A_a(2)$_____
3) Three Story: $A_a(3)$_____

d) Unlimited Area Building: Yes _____ No _____ Code Section: _____

K. Fire Resistance Rating Requirements for Building Elements (hours). NA-EXISTING BUILDING

Element	Hours	Assembly Listing	Element	Hours	Assembly Listing
Exterior Bearing Walls			Floors - Ceiling Floors		
Interior Bearing Walls			Roofs - Ceiling Roofs		
Exterior Non-Bearing Walls			Exterior Doors and Windows		
Structural Frame			Shaft Enclosures		
Partitions - Permanent			Fire Walls		
Fire Barriers			Fire Partitions		
			Smoke Partitions		

L. Design Occupant Load: __NA__ EXISTING BUILDING

Exit Width Required: __NA__ Exit Width Provided: __NA__

M. Minimum Number of Required Plumbing Facilities: NA-EXISTING BUILDING

a) Water Closets - Required (m) _____ (f) _____ Provided (m) _____ (f) _____
b) Lavatories - Required (m) _____ (f) _____ Provided (m) _____ (f) _____
c) Bath Tubs or Showers: _____
d) Drinking Fountains: _____ Service Sinks: _____

FOOTNOTES:

1) In case of conflict with the U.S. Department of Justice Federal Registers Parts I through V - ADA Guidelines and specific reference to the International Building Code Accessibility Chapters, the more restrictive requirement shall govern.

2) Additional Code Information shall be provided at the discretion of the Building Official for Complex Buildings. Including, but not limited to:
   a) High Rise Requirements.
   b) Atriums.
   c) Performance Based Criteria.
   d) Means or Egress Analysis.
   e) Fire Assembly Locator Sheet.
   f) Exterior and Interior Accessibility Route.
   g) Fire Stopping, Including Tested Design Number.

SCOPE:
REPLACEMENT OF TWO BOILERS, SOME PIPING, CONNECTING INTO EXISTING STACK, ELECTRICAL AND REPLACING SOME CONTROLS. SCOPE DOES NOT INCLUDE ANY ADDITIONS OR MODIFICATIONS TO THE EXISTING STRUCTURAL OR BUILDING.

DIXIE STATE UNIVERSITY
BURNS ARENA BOILER REPLACEMENT
DFCM #14281640

DESIGN CRITERIA:

THESE DOCUMENTS - DRAWINGS AND SPECIFICATIONS COMPLY WITH ALL THE REQUIREMENTS OF THE DFCM UPDATED STANDARDS FOR MECHANICAL UPGRADES OF EXISTING BUILDING.

CODE INSPECTION REQUIREMENTS:

1. BEFORE A FINAL ACCEPTANCE CAN BE ISSUED, THE STATE APPOINTED CODE INSPECTOR SHALL PROVIDE A FINAL REPORT RECOMMENDING THAT THE NEW MECHANICAL WORK IS IN COMPLIANCE WITH THE DRAWINGS, SPECIFICATIONS AND APPLICABLE CODES ESPECIALLY FOR THE FOLLOWING ITEMS.
   a.)SEISMIC - MECHANICAL AND ELECTRICAL PER DEFERRED SUBMITTALS.
   b.)EPOXY.
   c.)FIRE CAULKING AT RATED WALLS.
   d.)WELDING - PIPING.
2. SEE ALSO SHEET G002.

DEFERRED SUBMITTALS :

1. SEISMIC FOR ALL NEW PIPING 4" AND ABOVE AND BOILER RESTRAINTS-INTERIOR.
2. SEISMIC ENGINEER SHALL PROVIDE A SUBMITTAL INCLUDING CALCULATIONS AND DETAILS TO THE DFCM BUILDING OFFICIALS FOR REVIEW. SEISMIC SHALL BE DESIGNED TO RESIST THE EFFECTS OF EARTHQUAKE MOTIONS IN ACCORDANCE WITH ASCE 7-05. REFERENCE IBC SECTION 1613.1.
3. THE DATE OF DEFERRED SUBMITTALS IS APPROXIMATELY **15 DAYS** AFTER NOTICE TO PROCEED. MECHANICAL WORK CANNOT COMMENCE UNTIL THE DFCM BUILDING OFFICIALS HAVE APPROVED THE SEISMIC SUBMITTALS.
4. EACH DEFERRED SUBMITTAL IS REQUIRED TO HAVE THE PROJECT NAME, DFCM NUMBER, PROJECT ADDRESS, CONFORMANCE LETTER OR STAMP FROM THE DESIGNER AND A 3"x3" SPACE FOR THE APPROVAL STAMP ON THE FRONT PAGE.

SPECIAL INSPECTIONS:

1. SEE SHEET DRAWING G002.

DRAWING INDEX:

GENERAL:

G001--- TITLE SHEET
G002--- SPECIAL INSPECTIONS AND TESTING

MECHANICAL:

MG001- MECHANICAL GENERAL NOTES AND LEGEND
ME301- BURNS ARENA BOILER ROOM SECTIONS
ME401- BURNS ARENA LARGE SCALE BOILER ROOM PLANS
ME501- MECHANICAL DETAILS
ME601- MECHANICAL SCHEDULES & DETAILS
ME701- FLOW DIAGRAM

THE GREAT SEAL OF THE STATE OF UTAH · INDUSTRY · 1847 · 1896

State of Utah—Department of Administrative Services

DIVISION OF FACILITIES CONSTRUCTION AND MANAGEMENT

4110 State Office Building / Salt Lake City, Utah 84114 / 538-3018

CODE REVIEW STAMP

DIVISION OF FACILITIES CONSTRUCTION AND MANAGEMENT
REVIEWED FOR CODE COMPLIANCE
SIGNATURE: _____
DATE: 03/10/2015

PROJECT AREA

South 700 East
Saint George, Utah

PROFESSIONAL ENGINEER 02/27/15 WINWARD M. PACKER No. 375080 STATE OF UTAH

WHW ENGINEERING INC.
PROFESSIONAL MECHANICAL ENGINEERING
8619 Sandy Parkway Suite 101
SANDY, UTAH 84070
(801)466-4021, FAX 466-8536
EMAIL: excellence@whw-engineering.com

G001

Asphalt testing (specify locations and frequency)	☐ Continuous	☐ Periodic	
Heating hot water piping welding (specify locations and frequency)	☐ Continuous	☒ Periodic	Verify quality of all new welds and qualifications of Welder. See specifications.
Seismic supports for duct work and sealing of joints for duct work	☐ Continuous	☐ Periodic	
Seismic supports for electrical raceways, cable trays and lights	☐ Continuous	☐ Periodic	
Seismic supports for heating hot water lines including gas.	☐ Continuous	☒ Periodic	Verify that installations meets deferred submittals For seismic.
Seismic bracing for mechanical units on slab.	☐ Continuous	☒ Periodic	Verify that installations meets deferred submittals For seismic.

Special Inspectors Shall:

- Be approved by the Building Official prior to performing any duties;
- Provide proof of licensure as a special inspector by the State of Utah for each type of inspection;
- Inspection reports are to meet the requirements of IBC 1704.2.4 and DFCM standards;
- Inspection reports are to be submitted to the code consultant, architect, DFCM project manager, and the State of Utah Building Official within 48 hours of performing inspections;
- A final inspection report shall be submitted following completion of the project documenting the types of special inspections performed and a statement indicating that the structure is in compliance with the approved construction documents and applicable codes (see IBC 1704.2.4).

STRUCTURAL OBSERVATIONS (IBC 1704.5) **NOT REQUIRED**

Structural Observer's Shall:

- Provide proof of licensure as a licensed professional/structural engineer by the State of Utah;
- If structural observations are performed by individuals other than the design professional in responsible charge, they should first be approved by the Building Official.
- At the conclusion of work a final structural observation report must be submitted to the Building Official noting any deficiencies which, to the best of the structural observer's knowledge, have not been resolved (see IBC 1704.5).

Updated July 22, 2013

Item			Detailed Instructions and Frequencies
Anchorage of emergency or standby power systems	☐ Continuous	☐ Periodic	Verify that anchorage complies with approved construction documents. ***Performed by code inspection firm.***
Installation of piping systems carrying flammable, combustible or highly toxic materials	☐ Continuous	☐ Periodic	Verify that installation and restraint comply with approved construction documents. ***Performed by code inspection firm.***
Installation of HVAC ductwork containing hazardous materials	☐ Continuous	☐ Periodic	Verify that installation and restraint comply with approved construction documents. ***Performed by code inspection firm.***
Installation of vibration isolation systems having a clearance of ≤¼"	☐ Continuous	☒ Periodic	Verify that installation complies with approved construction documents and manufacturer's recommendations. ***Performed by code inspection firm.***
Designated seismic systems	☐ Continuous	☒ Periodic	Confirm that manufacturer's certificate of compliance conforms to the requirements of Section 13.2 of ASCE 7-10. Verify that the label, anchorage or mounting conforms to the manufacturer's certificate of compliance. ***Performed by code inspection firm.***

SEISMICALLY ISOLATED STRUCTURES (IBC 1705.11.8 & 1705.12.4) **NOT REQUIRED**

SPECIAL CASES (IBC 1705.1.1) – material alternatives or unusual design applications

Item			Detailed Instructions and Frequencies
Material and installation	☐ Continuous	☒ Periodic	Per design professional in responsible charge or report from an accepted accreditation agency (i.e. ICC-ES).

MISCELLANEOUS AREAS

➢ *These inspections may be recommended by the Architect/Engineer and are to be approved by DFCM.*

Item			Detailed Instructions and Frequencies
Suspended Acoustical Ceilings	☐ Continuous	☐ Periodic	***Performed by code inspection firm.***
Soil backfill (specify locations and frequency)	☐ Continuous	☐ Periodic	
Soils for curb and gutter (specify locations and frequency)	☐ Continuous	☐ Periodic	
Soils for parking lots (specify locations and frequency)	☐ Continuous	☐ Periodic	
Soils for utility trench backfill	☐ Continuous	☐ Periodic	
Reinforcement for slab on grade sidewalks and drive approaches (specify locations and frequency)	☐ Continuous	☐ Periodic	
Reinforcement for interior slab on grade (specify locations and frequency)	☐ Continuous	☐ Periodic	
Concrete testing for slab on grade sidewalks and drive approaches (specify locations and frequency)	☐ Continuous	☐ Periodic	
Concrete testing for interior slab on grade (specify locations and frequency)	☐ Continuous	☐ Periodic	
Asphalt inspection (specify locations and frequency)	☐ Continuous	☐ Periodic	

SPECIAL INSPECTION, MATERIAL TESTING & STRUCTURAL OBSERVATION ITEMS REQUIRED BY CHAPTER 17 OF THE 2012 IBC

Indicate items requiring special inspection, structural testing, or structural observations by checking the appropriate box. All items not requiring inspection/testing should be removed from the form. For items requiring continuous inspection, a special inspector must be present onsite during the performance of that task. In most cases "periodic" inspections/tests shall be performed prior to commencing the task, intermittently during the task, and at the completion of the task. The "Detailed Instructions & Frequency" provides a description of the presumed requirements for tasks requiring "periodic" inspections. The design professional in responsible should revise the requirements as needed on a project-specific basis.

FABRICATORS (IBC 1704.2.5) **NOT REQUIRED**

STRUCTURAL STEEL (IBC 1705.2.1, 1705.11.1 & 1705.12.2) **NOT REQUIRED**

STEEL CONSTRUCTION OTHER THAN STRUCTURAL STEEL (IBC 1705.2.2) **NOT REQUIRED**

CONCRETE CONSTRUCTION (IBC 1705.3 & 1705.12.1) **NOT REQUIRED**

MASONRY CONSTRUCTION (IBC 1705.4) **NOT REQUIRED**

WOOD CONSTRUCTION (IBC 1705.5, 1705.10.1 & 1705.11.2) **NOT REQUIRED**

SOILS CONSTRUCTION (IBC 1705.6) **NOT REQUIRED**

DRIVEN DEEP FOUNDATIONS (IBC 1705.7) **NOT REQUIRED**

CAST-IN-PLACE DEEP FOUNDATIONS (IBC 1705.8) **NOT REQUIRED**

HELICAL PILE FOUNDATIONS (IBC 1705.9) **NOT REQUIRED**

SPRAYED FIRE-RESISTANT MATERIALS (IBC 1705.13) **NOT REQUIRED**

MASTIC AND INTUMESCENT FIRE-RESISTANT COATINGS (IBC 1705.14) **NOT REQUIRED**

EXTERIOR INSULATION AND FINISH SYSTEMS (EIFS) (IBC 1705.15) **NOT REQUIRED**

FIRE-RESISTANT PENETRATIONS AND JOINTS (IBC 1705.16) **NOT REQUIRED**

SMOKE CONTROL (IBC 1705.17) **NOT REQUIRED**

ARCHITECTURAL COMPONENTS (IBC 1705.11.5 & 1705.11.7) **NOT REQUIRED**

MECHANICAL & ELECTRICAL COMPONENTS (IBC 1705.11.4 & 1705.11.6)

➢ *Only required for buildings located within Seismic Design Category C, D, E, or F.*

ALL IDEAS, DESIGNS, ARRANGEMENTS AND PLANS INDICATED OR REPRESENTED BY THIS DRAWING ARE OWNED BY AND THE PROPERTY OF WHW ENGINEERING INC. AND WERE CREATED, EVOLVED, AND DEVELOPED FOR USE ON AND IN CONNECTION WITH THE SPECIFIED PROJECT. NONE OF THE IDEAS, DESIGNS, ARRANGEMENTS OR PLANS SHALL BE USED BY OR DISCLOSED TO ANY PERSON, FIRM, OR CORPORATION FOR ANY PURPOSE WHATSOEVER WITHOUT WRITTEN CONSENT OF WHW ENGINEERING INC., WRITTEN DIMENSIONS ON THESE DRAWINGS SHALL HAVE PRECEDENCE OVER SCALE DIMENSIONS. CONTRACTORS SHALL VERIFY AND BE RESPONSIBLE FOR ALL DIMENSIONS AND CONDITIONS ON THE JOB AND THE OFFICE MUST BE NOTIFIED OF ANY VARIATION FROM THE DIMENSIONS AND CONDITIONS SHOWN BY THESE DRAWINGS. WARNING: REPRODUCTION HEREOF IS A CRIMINAL OFFENSE UNDER 18 U.S.C. SEC. 506. UNAUTHORIZED DISCLOSURE MAY CONSTITUTE TRADE SECRET MISAPPROPRIATION IN VIOLATION OF U.C.A.§ 13-24-3-1 ET. SEQ. AND OTHER LAWS.

State of Utah
Department of Administrative Services

Division of Facilities Construction & Management
4110 State Office Building
Salt Lake City, Utah 84114
Phone: (801) 538 - 3018
Fax: (801) 538 - 3267

Internet: http://www.dfcm.state.ut.us

CONSULTANTS

WHW ENGINEERING INC.
PROFESSIONAL MECHANICAL ENGINEERING
8619 Sandy Parkway Suite 101
SANDY, UTAH 84070
(801)466-4021, FAX 466-8536
EMAIL: excellence@whw-engineering.com

CODE REVIEW STAMP

DIVISION OF FACILITIES CONSTRUCTION AND MANAGEMENT
REVIEWED FOR CODE COMPLIANCE
SIGNATURE:
DATE: 03/10/2015

PROJECT NAME & ADDRESS

DSU BURNS ARENA BOILER REPLACEMENTS

DFCM#14281640

St. George, Utah

MARK	DATE	REVISION

PROJECT MANAGER: SLW
DRAWN BY: LGD
CHECKED BY: WP
DATE: 02/27//15
WHW JOB NO.: 14053

PROFESSIONAL ENGINEER 02/27/15 WINWARD M. PACKER No. 375080 STATE OF UTAH

SHEET TITLE

SPECIAL INSPECTIONS AND TESTING

SHEET NO.

G002

ALL IDEAS, DESIGNS, ARRANGEMENTS AND PLANS INDICATED OR REPRESENTED BY THIS DRAWING ARE OWNED BY AND THE PROPERTY OF WHW ENGINEERING INC. AND WERE CREATED, EVOLVED, AND DEVELOPED FOR USE ON AND IN CONNECTION WITH THE SPECIFIED PROJECT. NONE OF THE IDEAS, DESIGNS, ARRANGEMENTS OR PLANS SHALL BE USED BY OR DISCLOSED TO ANY PERSON, FIRM, OR CORPORATION FOR ANY PURPOSE WHATSOEVER WITHOUT WRITTEN CONSENT OF WHW ENGINEERING INC. WRITTEN DIMENSIONS ON THESE DRAWINGS SHALL HAVE PRECEDANCE OVER SCALE DIMENSIONS. CONTRACTORS SHALL VERIFY AND BE RESPONSIBLE FOR ALL DIMENSIONS AND CONDITIONS ON THE JOB AND THE OFFICE MUST BE NOTIFIED OF ANY VARIATION FROM THE DIMENSIONS AND CONDITIONS SHOWN BY THESE DRAWINGS. WARNING: REPRODUCTION HEREOF IS A CRIMINAL OFFENSE UNDER 18 U.S.C. SEC. 506. UNAUTHORIZED DISCLOSURE MAY CONSTITUTE TRADE SECRET MISAPPROPRIATION IN VIOLATION OF U.C.A.§ 13-24-2-3-1 ET. SEQ. AND OTHER LAWS.

MECHANICAL LEGEND

SYMBOL	ABR.	DESCRIPTION
GENERAL TERMINOLOGY		
A / ME-101		SECTION LETTER DESIGNATION / SECTION DRAWN ON THIS SHEET
A2		DETAIL NUMBER DESIGNATION CORRESPONDING WITH GRID LOCATION
AH 1		MECHANICAL EQUIPMENT DESIGNATION / EQUIPMENT ITEM DESIGNATION
1		REVISION DESIGNATOR AND NUMBER
1		KEY NOTE DESIGNATOR AND NUMBER
	POC	POINT OF CONNECTION
	POR	POINT OF REMOVAL
AFF		ABOVE FINISHED FLOOR
℄ EL.		CENTER LINE ELEVATION
GC		GENERAL CONTRACTOR
MC		MECHANICAL CONTRACTOR
EC		ELECTRICAL CONTRACTOR
CC		CONTROLS CONTRACTOR
NIC		NOT IN CONTRACT
NTS		NOT TO SCALE
SYMBOL	ABR.	DESCRIPTION
		EXISTING EQUIPMENT TO BE REMOVED
		EXISTING EQUIPMENT TO REMAIN
		NEW EQUIPMENT

SYMBOL	ABR.	DESCRIPTION
WET SIDE		
		UNION
		MANUAL ACTUATOR (BALL, BUTTERFLY, NEEDLE, ETC. VALVES)
		MANUAL ACTUATOR (GATE, GLOBE, S&D, OS&Y, ETC. VALVES)
		THREADED OR SWEAT VALVE CONNECTION
		NEEDLE VALVE
		FLANGED VALVE CONNECTION
		BUTTERFLY VALVE
		CHECK VALVE
	PRV	PRESSURE REDUCING VALVE
	CBV	CIRCUIT BALANCING VALVE
	BV	BALL VALVE
P	PRV	PRESSURE RELIEF VALVE
		AUTOMATIC AIR VENT
		MANUAL AIR VENT
		STRAINER
		STRAINER W/ PLUGGED BLOW OFF
	VTI	VENTURI
		PRESSURE GAUGE AND GAUGE COCK - WATER
		THERMOMETER AND THERMOWELL
	TW	THERMOWELL
		DIRECTION OF FLOW

SYMBOL	ABR.	DESCRIPTION
WET SIDE CONT		
		SLOPE
		ELBOW UP
		ELBOW DOWN
		TEE UP
		TEE DOWN
		EXISTING PIPING TO BE REMOVED
		EXISTING PIPING TO REMAIN
		NEW PIPING
		PIPE CAP OR PLUG
		CONCENTRIC REDUCER
		ECCENTRIC REDUCER
G		NATURAL GAS PIPING
D		EQUIPMENT DRAIN
MU		MAKE-UP WATER
V		VENT PIPING
HWS		HOT WATER SUPPLY
HWR		HOT WATER RETURN

GENERAL NOTES:

G-1 MECHANICAL INFORMATION IS NOT LIMITED TO THE MECHANICAL DRAWINGS. CONTRACTOR SHALL BE RESPONSIBLE FOR INFORMATION OF THE EXISTING BUILDING, BOILER PLANT, SITE CONDITIONS, EXISTING PIPING, EQUIPMENT, ELECTRICAL, CONTROLS, SUPPORTS, AND CONCRETE BASES AND FLOORS.

A - EACH DRAWING SHEET AND THE SPECIFICATIONS HAVE BEEN PREPARED TO SUPPLEMENT EACH OTHER AND THEY SHALL BE INTERPRETED AS AN INTEGRAL UNIT WITH ITEMS SHOWN AND NOTED ON ONE AND NOT THE OTHER BEING FURNISHED AND INSTALLED AS THOUGH SHOWN AND CALLED OUT IN ALL PLACES. ITEMS IN SPECIFICATIONS OR DRAWINGS LISTED WHICH ARE DIFFERING IN EFFICIENCY OR QUALITY SHALL BE HELD TO THE GREATEST OF: EFFICIENCY, QUALITY OR GOVERNING CODE.

B - THE CONTRACTOR WILL BE HELD RESPONSIBLE FOR THE INSTALLATION OF THE SYSTEMS ACCORDING TO THE TRUE INTENT AND MEANING OF THE CONTRACT DOCUMENTS.

C - THE CONTRACTOR SHALL INSTALL ALL EQUIPMENT WITH PROPER SERVICE ACCESS AND CLEARANCES ACCORDING TO MANUFACTURERS RECOMMENDATIONS. THE CONTRACTOR SHALL REVIEW SUPPLIERS BID PACKAGES FOR COMPLETENESS AND COMPLIANCE TO THE SPECIFICATIONS, SCHEDULES, AND DESIGN INTENT (ALL EQUIPMENT AND METHODS). THE CONTRACTOR SHALL REMOVE AND REINSTALL CORRECTLY AT HIS OWN EXPENSE ANY EQUIPMENT NOT IN COMPLIANCE.

D - THE CONTRACTOR SHALL CONSULT MANUFACTURERS INSTALLATION INSTRUCTIONS FOR SIZES, METHODS, ACCESSORIES, AND CLEARANCES IN SPACE AVAILABLE PRIOR TO BIDDING PROJECT.

E - ANYTHING NOT CLEAR OR IN CONFLICT WILL BE EXPLAINED BY MAKING APPLICATION TO THE ENGINEER IN WRITING.

G-2 ANY AND ALL ALTERATIONS TO THE SYSTEM SHOWN SHALL BE SUBMITTED TO THE ENGINEER PRIOR TO CHANGES FOR APPROVAL. CONTRACTOR SHALL NOT START ANY CHANGES UNTIL NOTIFIED IN WRITING. IF CHANGES ARE MADE PRIOR TO APPROVAL CONTRACTOR SHALL TAKE ALL RESPONSIBILITY FOR THE CHANGES MADE AND ALL COSTS RELATING TO FAILURE OR REPLACEMENT OF ALTERATIONS.

G-3 CONTRACTOR SHALL FIELD VERIFY ALL DIMENSIONS, TIE-IN POINTS, AND FINAL EQUIPMENT LOCATIONS.

G-4 THE WORKING DRAWINGS ARE DIAGRAMMATIC. THEY DO NOT SHOW EVERY OFFSET, BEND, OR ELBOW NECESSARY FOR THE COMPLETE INSTALLATION IN THE SPACE PROVIDED. ALL LOCATIONS FOR MECHANICAL EQUIPMENT SHALL BE FIELD VERIFIED AND COORDINATED WITH ALL DRAWINGS.

G-5 THE INSTRUCTION TO "PROVIDE" ALSO INCLUDES INSTALLATION.

G-6 STACK SIZE SHOWN ON DRAWINGS ARE FREE AREA DIMENSIONS.

G-7 THE CONTRACTOR SHALL ASSUME ALL RESPONSIBILITY IN HANDLING AND DISPOSING OF OILS, ETC. ALL SUCH MATERIALS SHALL BE HANDLED, DISPOSED, AND USED IN ACCORDANCE WITH ALL LOCAL, STATE, AND FEDERAL LAWS.

G-8 THE MECHANICAL CONTRACTOR SHALL VERIFY NEW MOTOR VOLTAGES WITH THE ELECTRICAL DESIGN BUILD CONTRACTOR BEFORE ORDERING MOTORIZED EQUIPMENT AND CONTROLS.

G-9 SUPPLIERS SHALL REVIEW ALL DRAWINGS AND THE SPECIFICATIONS PRIOR TO SUBMITTING PRICES TO THE CONTRACTOR. ALL QUESTIONS AND DISCREPANCIES SHALL BE BROUGHT TO THE ENGINEERS ATTENTION PRIOR TO BIDDING.

G-10 CONTRACTOR SHALL THOROUGHLY REVIEW AND SIGN SUBMITTALS FOR COMPLETENESS AND COMPLIANCE TO THE SPECIFICATIONS PRIOR TO ENGINEERS REVIEW. SUPPLIERS SHALL HIGHLIGHT OR MARK ALL INFORMATION REQUIRED TO SHOW COMPLIANCE TO THE SPECIFICATIONS. ALL REQUESTED EXCEPTIONS TO THE SPECIFICATIONS, OR SCHEDULES SHALL BE CLEARLY NOTED AND EXPLAINED. SUBMITTAL REVIEW AND ACCEPTANCE IS FOR DESIGN CONCEPT ONLY, AND DOES NOT AT ANY TIME RELIEVE THE CONTRACTOR OF RESPONSIBILITY TO MEET SPECIFICATIONS, CAPACITIES, OR DESIGN INTENT.

G-11 ALL MECHANICAL AND PLUMBING SHALL BE INSTALLED AND CONFORM TO THE 2012 EDITION OF THE IMC AND IPC WITH UTAH ANNOTATIONS AND STATE REQUIREMENTS. ALL ELECTRICAL SHALL BE INSTALLED AND CONFORM TO THE 2011 EDITION OF THE N.E.C. WITH UTAH ANNOTATIONS.

G-12 THIS CONTRACTOR SHALL BE RESPONSIBLE FOR THE DRAINING DOWN AND RE-FILLING OF ALL SYSTEMS NECESSARY TO COMPLETE THE WORK OUTLINED BY THIS PROJECT. THIS INCLUDES PROVIDING THE REQUIRED CHEMICAL TREATMENT WHEN RE-FILLING THE SYSTEM. COORDINATE WITH DIXIE STATE UNIVERSITY FOR CHEMICALS AND HOW TO FILL SYSTEM.

G-13 ALL PIPING, MATERIALS, ETC. SHALL BE NEW AND DOMESTIC MADE UNLESS SPECIFICALLY AUTHORIZED IN WRITING PRIOR TO BID. **PIPING SHALL BE SEAMLESS, TYPE ASTM A - 106 FOR ALL HEATING HOT WATER.**

G-14 THIS CONTRACTOR SHALL CONTRACT WITH A DESIGN BUILD ELECTRICAL CONTRACTOR FOR THE DESIGN AND CONSTRUCTION OF THE ELECTRICAL PORTION OF THIS PROJECT. ELECTRICAL DESIGN AND INSTALLATION SHALL BE PER DFCM AND DSU REQUIREMENTS AND STANDARDS AND IN ACCORDANCE WITH 2011 N.E.C.

State of Utah
Department of Administrative Services
Division of Facilities Construction & Management
4110 State Office Building
Salt Lake City, Utah 84114
Phone: (801) 538 - 3018
Fax: (801) 538 - 3267
Internet: http://www.dfcm.state.ut.us

CONSULTANTS

WHW ENGINEERING INC.
PROFESSIONAL MECHANICAL ENGINEERING
8619 Sandy Parkway Suite 101
SANDY, UTAH 84070
(801)466-4021, FAX 466-8536
EMAIL: excellence@whw-engineering.com

CODE REVIEW STAMP

DIVISION OF FACILITIES CONSTRUCTION AND MANAGEMENT
REVIEWED FOR CODE COMPLIANCE
SIGNATURE:
DATE: 03/10/2015

PROJECT NAME & ADDRESS

DSU BURNS ARENA BOILER REPLACEMENTS

DFCM#14281640

St. George, Utah

MARK	DATE	REVISION

PROJECT MANAGER: SLW
DRAWN BY: LGD
CHECKED BY: WP
DATE: 02/27/15
WHW JOB NO.: 14053

PROFESSIONAL ENGINEER 02/27/15 WINWARD M. PACKER No. 375080 STATE OF UTAH

SHEET TITLE

MECHANICAL GENERAL NOTES AND LEGEND

SHEET NO.

MG001

ALL IDEAS, DESIGNS, ARRANGEMENTS AND PLANS INDICATED OR REPRESENTED BY THIS DRAWING ARE OWNED BY AND THE PROPERTY OF WHW ENGINEERING INC., AND WERE CREATED, EVOLVED, AND DEVELOPED FOR USE ON AND IN CONNECTION WITH THE SPECIFIED PROJECT. NONE OF THE IDEAS, DESIGNS, ARRANGEMENTS AND PLANS INDICATED OR REPRESENTED BY THIS DRAWING ARE TO BE USED BY OR DISCLOSED TO ANY PERSON, FIRM, OR CORPORATION FOR ANY PURPOSE WHATSOEVER WITHOUT WRITTEN CONSENT OF WHW ENGINEERING INC., WRITTEN DIMENSIONS ON THESE DRAWINGS SHALL HAVE PRECEDENCE OVER SCALE DIMENSIONS. CONTRACTORS SHALL VERIFY AND BE RESPONSIBLE FOR ALL DIMENSIONS AND CONDITIONS ON THE JOB AND THE OFFICE MUST BE NOTIFIED OF ANY VARIATION FROM THE DIMENSIONS AND CONDITIONS SHOWN BY THESE DRAWINGS. WARNING: REPRODUCTION HEREOF BY A CRIMINAL OFFENSE UNDER 18 U.S.C. SEC. 506. UNAUTHORIZED DISCLOSURE MAY CONSTITUTE TRADE SECRET MISAPPROPRIATION IN VIOLATION OF U.C.A.§ 13-24-2-1-1 ET. SEQ. AND OTHER LAWS.

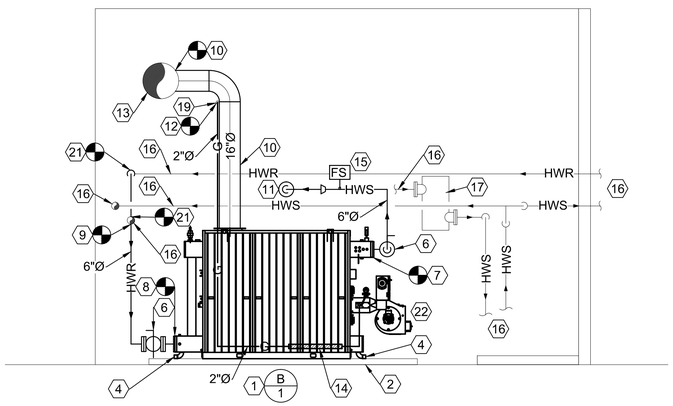

A1 BURNS ARENA BOILER SECTION PLAN
SCALE: 1/4" = 1'-0"

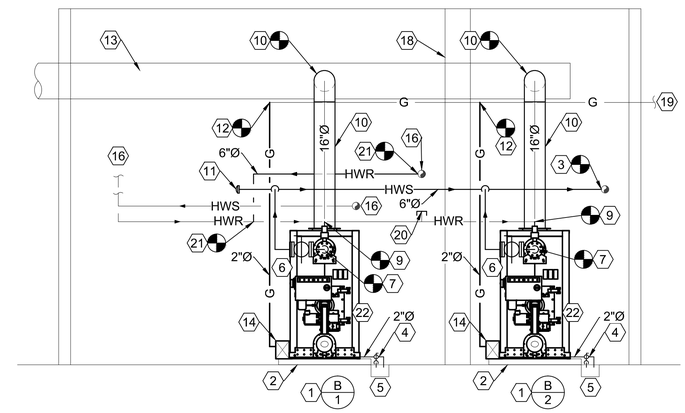

A3 BURNS ARENA BOILER SECTION PLAN
SCALE: 1/4" = 1'-0"

SHEET NOTES:

1. PROVIDE AND INSTALL NEW GAS FIRED FLEX TUBE HOT WATER BOILER AND ALL ASSOCIATED ITEMS SHOWN, SPECIFIED AND REQUIRED. MOUNT ON EXISTING HOUSEKEEPING PAD.
2. EXISTING HOUSE KEEPING PADS SHALL BE CLEANED, PATCHED AND PAINTED BEFORE SETTING OF BOILERS.
3. CONNECT TO EXISTING HOT WATER SUPPLY IN THIS APPROXIMATE LOCATION. IF EXISTING PIPING IS 5"Ø, PROVIDE A 6"x5" REDUCER. ALL NEW PIPING SHALL BE 6"Ø.
4. PROVIDE 2"Ø DRAINS TO EXISTING FLOOR SINKS. PROVIDE 2" BALL VALVE OUTSIDE OF PAD.
5. EXISTING FLOOR SINKS SHALL REMAIN.
6. 6" - 150# FLANGED BALL VALVE.
7. CONNECT TO BOILER'S HWS 6" - 150# FLANGE WITH NEW 6" - 150# COMPANION FLANGE.
8. CONNECT TO BOILER'S HWR 6" 150# FLANGE WITH NEW 6" - 150# COMPANION FLANGE.
9. CONNECT TO EXISTING HWR PIPING IN THIS APPROXIMATE LOCATION. PROVIDE A 6"x5" REDUCER IF EXISTING PIPING IS 5"Ø.
10. PROVIDE NEW 16"Ø BREECHING FROM BOILER AND CONNECT TO EXISTING HORIZONTAL BREECHING. CUT INTO EXISTING BREECHING. PATCH EXISTING OPENINGS MADE BY THE REMOVAL OF THE EXISTING BREECHING.
11. PROVIDE 6" - 150# COMPANION AND BLIND FLANGE ON END OF NEW HWS.
12. CONNECT TO EXISTING 2"Ø GAS PIPING IN THIS APPROXIMATE LOCATION. FIELD VERIFY EXACT TIE-IN LOCATION. ROUTE TO GAS TRAIN.
13. EXISTING 24"Ø BREECHING SHALL REMAIN.
14. GAS TRAIN. SEE DETAIL ME501.
15. NEW FLOW SWITCH.
16. EXISTING HWS AND HWR PIPING.
17. EXISTING AIR SEPARATOR.
18. EXISTING CONCRETE COLUMN.
19. EXISTING GAS PIPING.
20. CAP EXISTING HWR PIPING DROP.
21. PROVIDE NEW 6"Ø PIPING AND NEW CONNECTION TO EXISTING HWR PIPING.
22. SEE F.G.R. PIPING DETAIL A4/ME601.

KEYPLAN

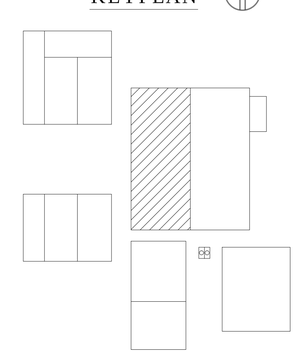

State of Utah
Department of Administrative Services
Division of Facilities Construction & Management
4110 State Office Building
Salt Lake City, Utah 84114
Phone: (801) 538 - 3018
Fax: (801) 538 - 3267
Internet: http://www.dfcm.state.ut.us

CONSULTANTS

WHW ENGINEERING INC.
PROFESSIONAL MECHANICAL ENGINEERING
8619 Sandy Parkway Suite 101
SANDY, UTAH 84070
(801)466-4021, FAX 466-8536
EMAIL: excellence@whw-engineering.com

CODE REVIEW STAMP

DIVISION OF FACILITIES CONSTRUCTION AND MANAGEMENT
REVIEWED FOR CODE COMPLIANCE
SIGNATURE:
DATE: 03/10/2015

PROJECT NAME & ADDRESS

DSU BURNS ARENA BOILER REPLACEMENTS

DFCM#14281640

St. George, Utah

MARK	DATE	REVISION

PROJECT MANAGER: SLW
DRAWN BY: LGD
CHECKED BY: WP
DATE: 02/27/15
WHW JOB NO.: 14053

PROFESSIONAL ENGINEER 02/27/15 WINWARD M. PACKER No. 375080 STATE OF UTAH

SHEET TITLE

BURNS ARENA BOILER ROOM SECTIONS

SHEET NO.

ME301

SHEET NOTES:

(40) PROVIDE O2 ANALYZER SYSTEM FOR BOTH NEW BOILERS. CONTROLS CONTRACTOR SHALL PROVIDE ALL NECESSARY STACK CONNECTIONS. BOILER MANUFACTURER SHALL PROVIDE THE O2 ANALYZER. SEE BOILER SPECIFICATIONS.

(41) PROVIDE 6" - 150# COMPANION AND BLIND FLANGE ON END OF NEW HWS.

(42) 4"Ø F.G.R. PIPING SHALL BE INSTALLED AND INSULATED BY CONTRACTOR. SEE SPECIFICATIONS FOR MATERIALS. SEE A4/ME601 FOR FGR PIPING AND CONNECTION DETAIL.

SHEET NOTES:

(35) REMOVE EXISTING HWR DROP AND CAP.

(36) REMOVE ELBOW DOWN AND PROVIDE A NEW 6"Ø HWR ELL AND ROUTE NEW 6"Ø HWR PIPING TO NEW HWR PIPING FROM AVENA AND ECCLES FITNESS CENTER.

(37) EMERGENCY PUSH BUTTON BOILER SHUT DOWN.

(38) EXISTING BUTTERFLY VALVES SHALL REMAIN.

(39) PROVIDE NATURAL GAS METER IN EXISTING 2"Ø GAS PIPING UPSTREAM OF BOILERS. METER SHALL BE EQUAL TO ONICON MODEL F-5100. CONNECT TO AUTOMATION SYSTEM. SEE DETAIL A1/ME501.

SHEET NOTES:

(30) CONNECT TO EXISTING GAS PIPING IN THIS APPROXIMATE LOCATION. MODIFY EXISTING OVERHEAD GAS PIPING AS REQUIRED. SEE DETAIL C1/ME501.

(31) PROVIDE NEW BOILER DISCONNECTS IN SAME LOCATION AS EXISTING REMOVED DISCONNECTS.

(32) PROVIDE 6" - 150# BALL VALVE.

(33) PROVIDE NEW FLOW SWITCHES.

(34) ROUTE RELIEF PIPING FROM RELIEF VALVE DOWN SIDE OF BOILER. TERMINATE 2" FROM FLOOR. SIZE PIPING PER MANUFACTURER'S SUPPLIED RELIEF VALVE. IF TWO RELIEF VALVES ARE PROVIDED CONNECT THE TWO TOGETHER AND PROVIDE ONE DROP.

SHEET NOTES:

(25) CONNECT TO EXISTING HWS PIPING AT THIS APPROXIMATE LOCATION AND EXTEND AS SHOWN. PROVIDE 6"x5" ECCENTRIC REDUCER IF EXISTING PIPING IS 5"Ø.

(26) CONNECT NEW 6"Ø HWS PIPING TO BOILERS 6" - 150# FLANGE AT HWS CONNECTION. SEE SHEET ME701 FOR HWS PIPING DETAILS.

(27) CONNECT 2"Ø DRAIN TO BOILERS 2"Ø DRAIN CONNECTION WITH UNION.

(28) PROVIDE 2"Ø BALL VALVE ON DRAIN LINE AWAY FROM BASE PAD SO DRAIN VALVE CAN BE REPLACED.

(29) CONNECT NEW 16"Ø BREECHING INTO SIDE OF EXISTING 24"Ø BREECHING. PATCH EXISTING HOLES IN BOTTOM OF EXISTING 24"Ø BREECHING.

SHEET NOTES:

(1) EXISTING HEATING HOT WATER PUMPS ALONG WITH ALL ASSOCIATED SUCTION AND DISCHARGE PIPING, VALVES, SUCTION DIFFUSERS ETC. SHALL REMAIN.

(2) EXISTING AIR SEPARATOR AND ASSOCIATED PIPING, FLANGES, FITTING ETC. SHALL REMAIN.

(3) EXISTING HEATING HOT WATER PIPING IN CORRIDORS SHALL REMAIN.

(4) EXISTING HOT WATER SUPPLY AND HOT WATER RETURN PIPING TO ARENA AND ECCLES FITNESS CENTER .

(5) EXISTING HOT WATER SUPPLY AND RETURN TO COX THEATER AND SMITH'S COMPUTER CENTER SHALL REMAIN.

(6) EXISTING FLOOR MOUNTED EXPANSION TANK ET-2 SHALL REMAIN.

(7) REMOVE EXISTING BOILERS 1 & 2. REMOVE ALL ASSOCIATED HOT WATER PIPING, GAS PIPING, DRAIN PIPING, RELIEF PIPING, FLUE, ELECTRICAL, CONTROLS, AND ALL ACCESSORIES. FIELD VERIFY.

(8) EXISTING DOMESTIC HOT WATER GENERATORS SHALL REMAIN.

(9) EXISTING FLOOR SINKS SHALL REMAIN. COVER AND PROTECT DURING CONSTRUCTION.

(10) EXISTING CONCRETE COLUMNS SHALL NOT BE DISTURBED.

(11) EXISTING DUCTWORK SHALL REMAIN.

(12) REMOVE EXISTING BOILER DISCONNECTS. CONDUIT, WIRING AND SUPPORT SHALL REMAIN. FIELD VERIFY.

(13) EXISTING EXPANSION PIPING SHALL REMAIN.

(14) REMOVE EXISTING GAS PIPING AND ALL ASSOCIATED ITEMS TO POINTS SHOWN. FIELD VERIFY.

(15) EXISTING OVERHEAD GAS PIPING SHALL REMAIN AND BE RE-USED.

(16) EXISTING VFD'S SHALL REMAIN.

(17) EXISTING MAKE-UP & CHEMICAL FEED WATER TANK, PUMP, AND PIPING SHALL REMAIN.

(18) REMOVE EXISTING HWS AND HWR PIPING AND VALVES TO POINTS SHOWN. FIELD VERIFY.

(19) REMOVE EXISTING BREECHING FROM EXISTING BOILER CONNECTIONS TO COMMON STACK

(20) EXISTING 24"Ø COMMON BREECHING AND STACK THROUGH ROOF SHALL REMAIN.

(21) EXISTING BOILER HOUSE KEEPING PADS SHALL REMAIN. AFTER BOILERS HAVE BEEN REMOVED, CONTRACTOR SHALL CLEAN, REPAIR, PATCH, ANDPAINT EXISTING HOUSE KEEPING PADS FOR PLACEMENT OF NEW BOILERS.

(22) PROVIDE NEW HOT WATER BOILERS AND ALL ASSOCIATED ITEMS. MOUNT ON EXISTING HOUSEKEEPING PADS.

(23) CONNECT TO EXISTING HWR PIPING IN THE VERTICAL PIPING AFTER THE TEE. PROVIDE A 6"x5" CONCENTRIC REDUCER IF EXISTING PIPING IS 5"Ø. DROP NEW 6"Ø PIPING AND CONNECT TO NEW BOILER'S 6" - 150# FLANGE HWR CONNECTION. SEE SHEET ME701 FOR HWR PIPING DETAILS.

(24) CONNECT TO EXISTING HWR PIPING IN THE VERTICAL PIPING AFTER THE 90° ELL.. PROVIDE A 6"x5" CONCENTRIC REDUCER IF EXISTING PIPING IS 5"Ø. DROP NEW 6"Ø PIPING AND CONNECT TO NEW BOILER'S 6" - 150# FLANGE HWR CONNECTION. SEE SHEET ME701 FOR HWR PIPING DETAILS.

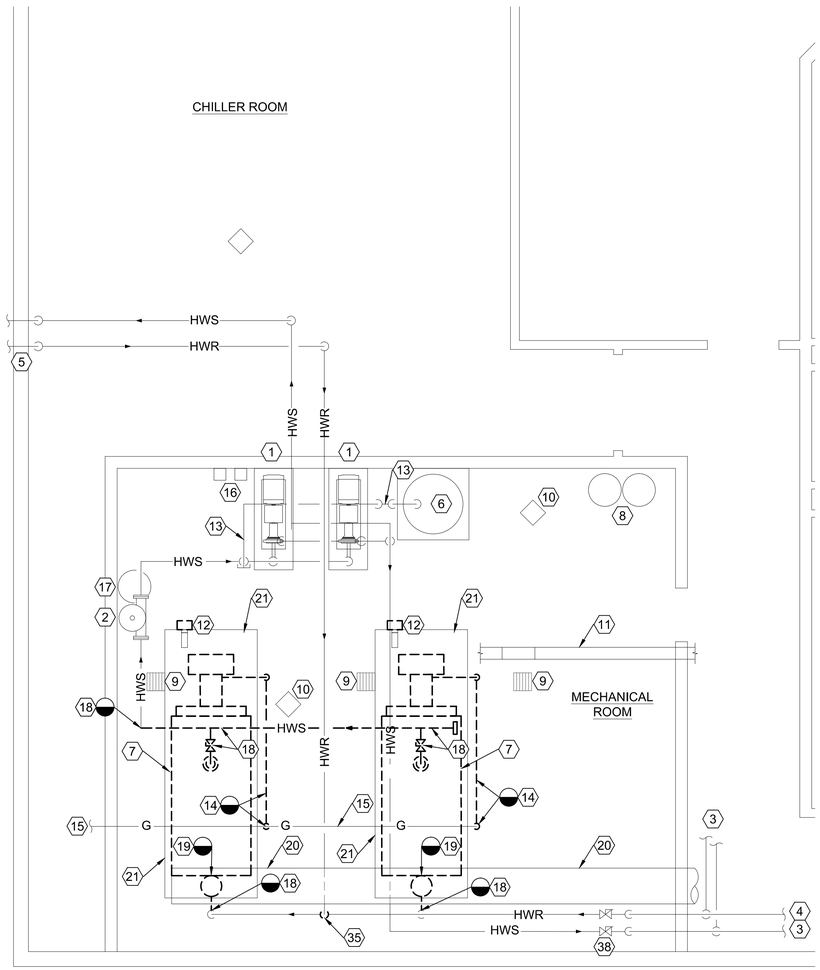

BURNS ARENA LARGE SCALE
BOILER ROOM DEMOLITION PLAN
1/4" = 1' - 0"

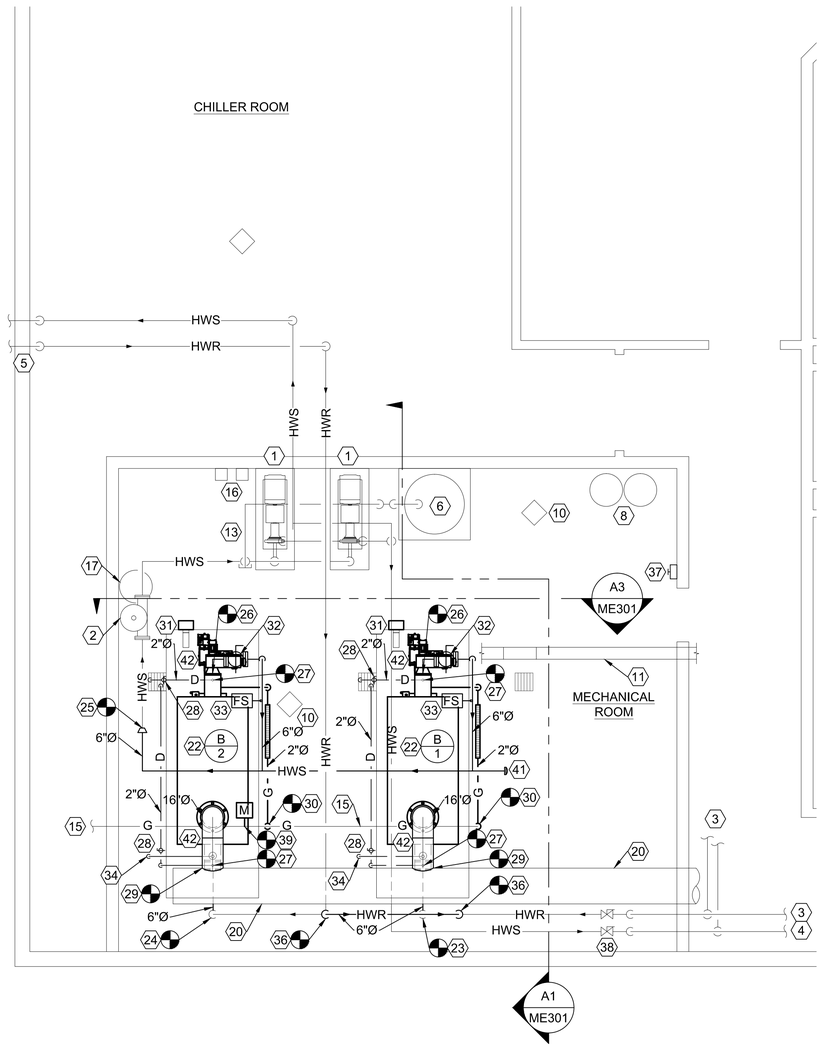

BURNS ARENA LARGE SCALE NEW
BOILER ROOM PLAN
1/4" = 1' - 0"

KEYPLAN

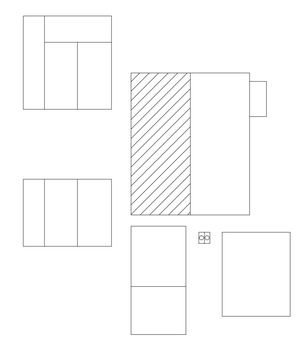

State of Utah
Department of Administrative Services
Division of Facilities Construction & Management
4110 State Office Building
Salt Lake City, Utah 84114
Phone: (801) 538 - 3018
Fax: (801) 538 - 3267
Internet: http://www.dfcm.state.ut.us

CONSULTANTS

WHW ENGINEERING INC.
PROFESSIONAL MECHANICAL ENGINEERING
8619 Sandy Parkway Suite 101
SANDY, UTAH 84070
(801)466-4021, FAX 466-8536
EMAIL: excellence@whw-engineering.com

CODE REVIEW STAMP

DIVISION OF FACILITIES CONSTRUCTION AND MANAGEMENT
REVIEWED FOR CODE COMPLIANCE
SIGNATURE:
DATE: 03/10/2015

PROJECT NAME & ADDRESS

DSU BURNS ARENA BOILER REPLACEMENTS

DFCM#14281640

St. George, Utah

MARK	DATE	REVISION

PROJECT MANAGER: SLW
DRAWN BY: LGD
CHECKED BY: WP
DATE: 02/27/15
WHW JOB NO.: 14053

PROFESSIONAL ENGINEER 02/27/15 WINWARD M. PACKER No. 375080 STATE OF UTAH

SHEET TITLE
BURNS ARENA LARGE SCALE BOILER ROOM PLANS

SHEET NO.
ME401

ALL IDEAS, DESIGNS, ARRANGEMENTS AND PLANS INDICATED OR REPRESENTED BY THIS DRAWING ARE OWNED BY AND THE PROPERTY OF WHW ENGINEERING INC., AND WERE CREATED, EVOLVED, AND DEVELOPED FOR USE ON AND IN CONNECTION WITH THE SPECIFIED PROJECT. NONE OF THE IDEAS, DESIGNS, ARRANGEMENTS OR PLANS SHALL BE USED BY OR DISCLOSED TO ANY PERSON, FIRM, OR CORPORATION FOR ANY PURPOSE WHATSOEVER WITHOUT WRITTEN CONSENT OF WHW ENGINEERING INC.. WRITTEN DIMENSIONS ON THESE DRAWINGS SHALL HAVE PRECEDENCE OVER SCALE DIMENSIONS. CONTRACTORS SHALL VERIFY AND BE RESPONSIBLE FOR ALL DIMENSIONS AND CONDITIONS ON THE JOB AND THIS OFFICE MUST BE NOTIFIED OF ANY VARIATION FROM THE DIMENSIONS AND CONDITIONS SHOWN BY THESE DRAWINGS. REPRODUCTION HEREOF BY A CRIMINAL OFFENSE UNDER 18 U.S.C. SEC. 506. UNAUTHORIZED DISCLOSURE MAY CONSTITUTE TRADE SECRET MISAPPROPRIATION IN VIOLATION OF U.C.A 13-24-3-1 ET. SEQ. AND OTHER LAWS.

ALL IDEAS, DESIGNS, ARRANGEMENTS AND PLANS INDICATED OR REPRESENTED BY THIS DRAWING ARE OWNED BY AND THE PROPERTY OF WHW ENGINEERING INC., AND WERE CREATED, EVOLVED, AND DEVELOPED FOR USE ON AND IN CONNECTION WITH THE SPECIFIED PROJECT. NONE OF THE IDEAS, DESIGNS, ARRANGEMENTS AND PLANS SHALL BE USED BY OR DISCLOSED TO ANY PERSON, FIRM, OR CORPORATION FOR ANY PURPOSE WHATSOEVER WITHOUT WRITTEN CONSENT OF WHW ENGINEERING INC. WRITTEN DIMENSIONS ON THESE DRAWINGS SHALL HAVE PRECEDENCE OVER SCALE DIMENSIONS. CONTRACTORS SHALL VERIFY AND BE RESPONSIBLE FOR ALL DIMENSIONS AND CONDITIONS ON THE JOB AND THIS OFFICE MUST BE NOTIFIED OF ANY VARIATION FROM THE DIMENSIONS AND CONDITIONS SHOWN BY THESE DRAWINGS. WARNING: REPRODUCTION HEREOF IS A CRIMINAL OFFENSE UNDER 18 U.S.C. SEC. 506. UNAUTHORIZED DISCLOSURE MAY CONSTITUTE TRADE SECRET MISAPPROPRIATION IN VIOLATION OF U.C.A.§ 13-24-3-1 ET. SEQ. AND OTHER LAWS.

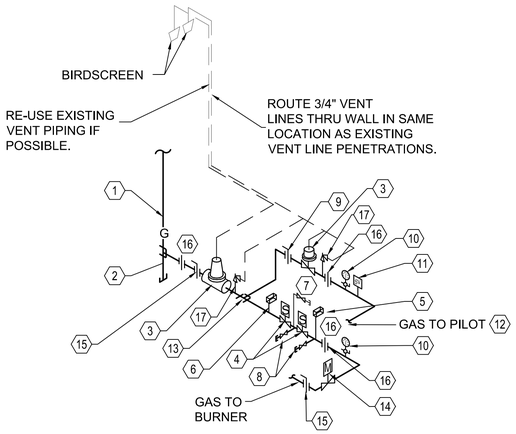

LEGEND	
NO.	ITEM
1	GAS INLET
2	DIRT LEG FULL SIZE
3	GAS PRESSURE REGULATOR
4	MOTORIZED SAFETY VALVE
5	HIGH PRESSURE SWITCH
6	LOW PRESSURE SWITCH
7	VENT VALVE AND VENT
8	TEST COCK
9	SHUT-OFF COCK
10	PRESSURE GUAGE
11	SOLENOID VALVE
12	GAS TO PILOT
13	GAS TAKE-OFF TO PILOT
14	MOTORIZED MODULATING VALVE
15	SHUT-OFF VALVE
16	UNION
17	RELIEF VALVE-VENT TO ATMOSPHERE

C1 CSD-1 AUTO-IGNITION GAS TRAIN ISOMETRIC
SCALE: NONE

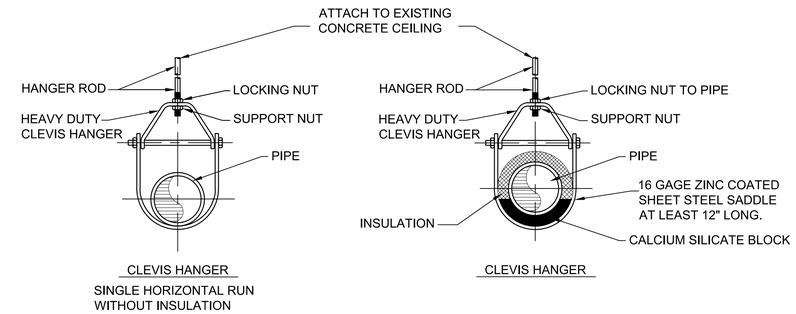

C4 PIPE HANGER DETAIL
SCALE: NONE

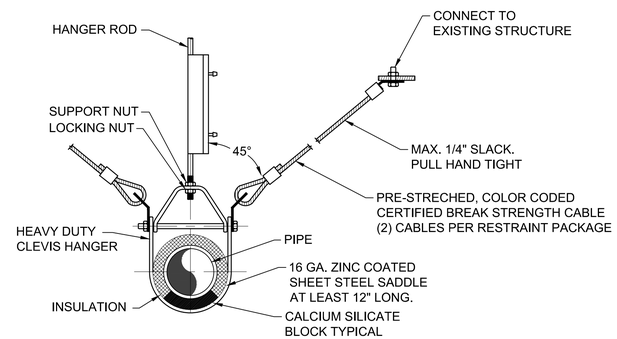

B3 SEISMIC SWAY BRACING DETAILS
SCALE: NONE

INSTALLATION KIT FROM ONICON:
KIT # INSTL64-3/4" FULL PORT BRONZE BALL VALVE, 3/4" GALV. CLOSE NIPPLE, 3/4"x1/2" BRASS REDUCING BUSHING, 3/4" CARBON STEEL WELD-O-LET, 1/2" STAINLESS STEEL COMPRESSION FITTING WITH PTFE FERRULES.

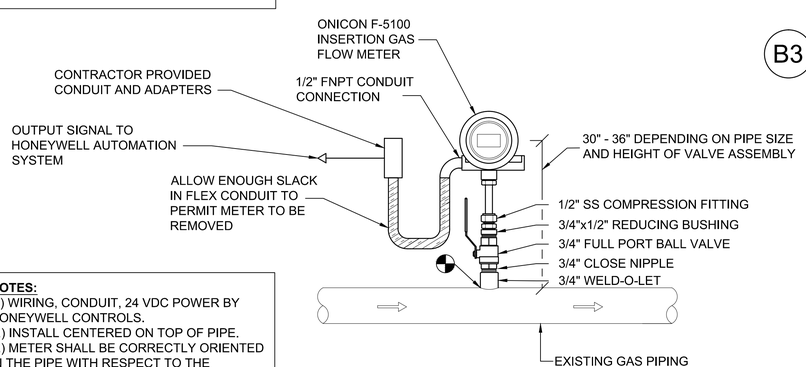

NOTES:
1.) WIRING, CONDUIT, 24 VDC POWER BY HONEYWELL CONTROLS.
2.) INSTALL CENTERED ON TOP OF PIPE.
3.) METER SHALL BE CORRECTLY ORIENTED IN THE PIPE WITH RESPECT TO THE DIRECTION OF FLOW. ARROW ON METER SHALL MATCH SAME DIRECTION AS GAS FLOW.

A1 NATURAL GAS METER DETAIL
SCALE: NONE

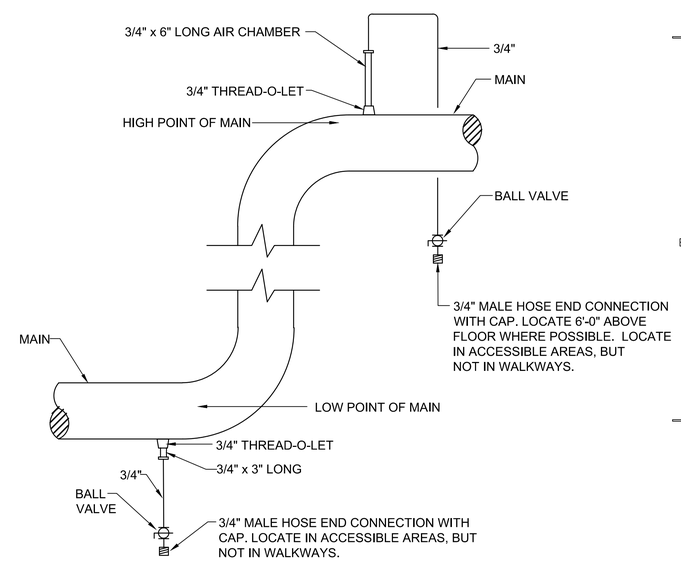

A4 MANUAL AIR VENT AND DRAIN DETAIL
SCALE: NONE

State of Utah
Department of Administrative Services
Division of Facilities Construction & Management
4110 State Office Building
Salt Lake City, Utah 84114
Phone: (801) 538 - 3018
Fax: (801) 538 - 3267
Internet: http://www.dfcm.state.ut.us

CONSULTANTS

WHW ENGINEERING INC.
PROFESSIONAL MECHANICAL ENGINEERING
8619 Sandy Parkway Suite 101
SANDY, UTAH 84070
(801)466-4021, FAX 466-8536
EMAIL: excellence@whw-engineering.com

CODE REVIEW STAMP

DIVISION OF FACILITIES CONSTRUCTION AND MANAGEMENT
REVIEWED FOR CODE COMPLIANCE
SIGNATURE:
DATE: 03/10/2015

PROJECT NAME & ADDRESS

DSU BURNS ARENA BOILER REPLACEMENTS

DFCM#14281640

St. George, Utah

MARK	DATE	REVISION

PROJECT MANAGER: SLW
DRAWN BY: LGD
CHECKED BY: WP
DATE: 02/27/15
WHW JOB NO.: 14053

PROFESSIONAL ENGINEER 02/27/15 WINWARD M. PACKER No. 375080 STATE OF UTAH

SHEET TITLE
MECHANICAL DETAILS

SHEET NO.
ME501

ALL IDEAS, DESIGNS, ARRANGEMENTS AND PLANS INDICATED OR REPRESENTED BY THIS DRAWING ARE OWNED BY AND THE PROPERTY OF WHW ENGINEERING INC., AND WERE CREATED, EVOLVED, AND DEVELOPED FOR USE ON AND IN CONNECTION WITH THE SPECIFIED PROJECT. NONE OF THE IDEAS, DESIGNS, ARRANGEMENTS OR PLANS SHALL BE USED BY OR DISCLOSED TO ANY PERSON, FIRM, OR CORPORATION FOR ANY PURPOSE WHATSOEVER WITHOUT WRITTEN CONSENT OF WHW ENGINEERING INC. WRITTEN DIMENSIONS ON THESE DRAWINGS SHALL HAVE PRECEDENCE OVER SCALE DIMENSIONS. CONTRACTORS SHALL VERIFY AND BE RESPONSIBLE FOR ALL DIMENSIONS AND CONDITIONS ON THE JOB AND THIS OFFICE MUST BE NOTIFIED OF ANY VARIATION FROM THE DIMENSIONS AND CONDITIONS SHOWN BY THESE DRAWINGS. WARNING: REPRODUCTION HEREOF IS A CRIMINAL OFFENSE UNDER 18 U.S.C. SEC. 506. UNAUTHORIZED DISCLOSURE MAY CONSTITUTE TRADE SECRET MISAPPROPRIATION IN VIOLATION OF I.C. 24-2-3-1 ET. SEQ. AND OTHER LAWS.

BOILER SCHEDULE

SYMBOL	TYPE	MBH INPUT	MBH OUTPUT	DESIGN WATER TEMP.		OPERATING WATER TEMP.		ELECTRICAL DATA			SHIPPING WEIGHT LBS.	BURNER FAN MOTOR	OPERATION WEIGHT LBS	MAKE AND MODEL #	SCHEDULE NOTES
				IN	OUT	IN	OUT	VOLTS	PHASE	CYCLE					
B 1	HOT WATER	5000	4250	220° F	320° F	160° F	180° F	480	3	60	6100	5 HP	7600	CLEAVER BROOKS FLX-500HW	1,2,3,4,5,6,7
B 2	HOT WATER	5000	4250	220° F	320° F	160° F	180° F	480	3	60	6100	5 HP	7600	CLEAVER BROOKS FLX-500HW	1,2,3,4,5,6,7

1. BOILER RATINGS ARE FOR SEA LEVEL.
2. SEE SPECIFICATION FOR OTHER APPROVED MANUFACTURERS.
3. VERIFY FLUE SIZING AND MATERIAL WITH EACH BOILER MANUFACTURER AND INSTALL ACCORDINGLY.
4. PROVIDE 120V CONTROL CIRCUIT. STEP DOWN TRANSFORMER BY BOILER MANUFACTURER.
5. BOILER SHALL COME KNOCKED DOWN AND ASSEMBLED IN BOILER ROOM BY BOILER MANUFACTURER.
6. PROVIDE WITH FGR PIPING.
7. PROVIDE LOW NOx BURNER.

PUMP SCHEDULE

1. PUMPS ARE EXISTING AND SHALL BE RE-USED SEE DRAWINGS.

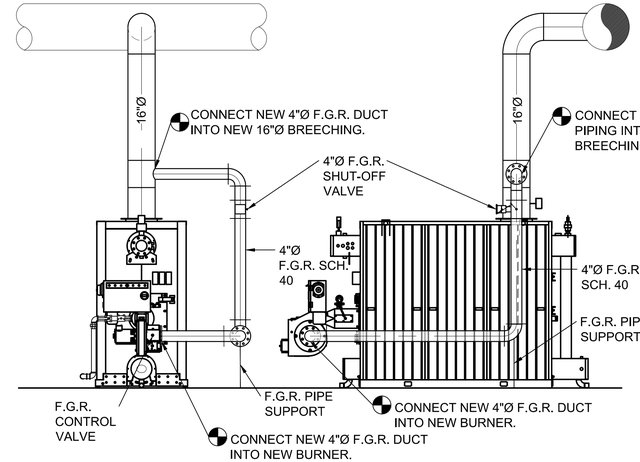

INSTALL F.G.R. PER MANUFACTURER'S RECOMMENDATIONS. ALL F.G.R. PIPING SHALL BE COVERED WITH A MINIMUM OF 2" OF INSULATION.

A4 F.G.R. PIPING SYSTEM DETAIL
SCALE: NONE

State of Utah
Department of Administrative Services
Division of Facilities Construction & Management
4110 State Office Building
Salt Lake City, Utah 84114
Phone: (801) 538 - 3018
Fax: (801) 538 - 3267
Internet: http://www.dfcm.state.ut.us

CONSULTANTS

WHW ENGINEERING INC.
PROFESSIONAL MECHANICAL ENGINEERING
8619 Sandy Parkway Suite 101
SANDY, UTAH 84070
(801)466-4021, FAX 466-8536
EMAIL: excellence@whw-engineering.com

CODE REVIEW STAMP

DIVISION OF FACILITIES CONSTRUCTION AND MANAGEMENT
REVIEWED FOR CODE COMPLIANCE
SIGNATURE:
DATE: 03/10/2015

PROJECT NAME & ADDRESS

DSU BURNS ARENA BOILER REPLACEMENTS

DFCM#14281640

St. George, Utah

MARK	DATE	REVISION

PROJECT MANAGER: SLW
DRAWN BY: LGD 02/27/15
CHECKED BY: WP
DATE: 02/27/15
WHW JOB NO.: 14053

PROFESSIONAL ENGINEER WINWARD M. PACKER No. 375080 STATE OF UTAH

SHEET TITLE

MECHANICAL SCHEDULES & DETAILS

SHEET NO.

ME601

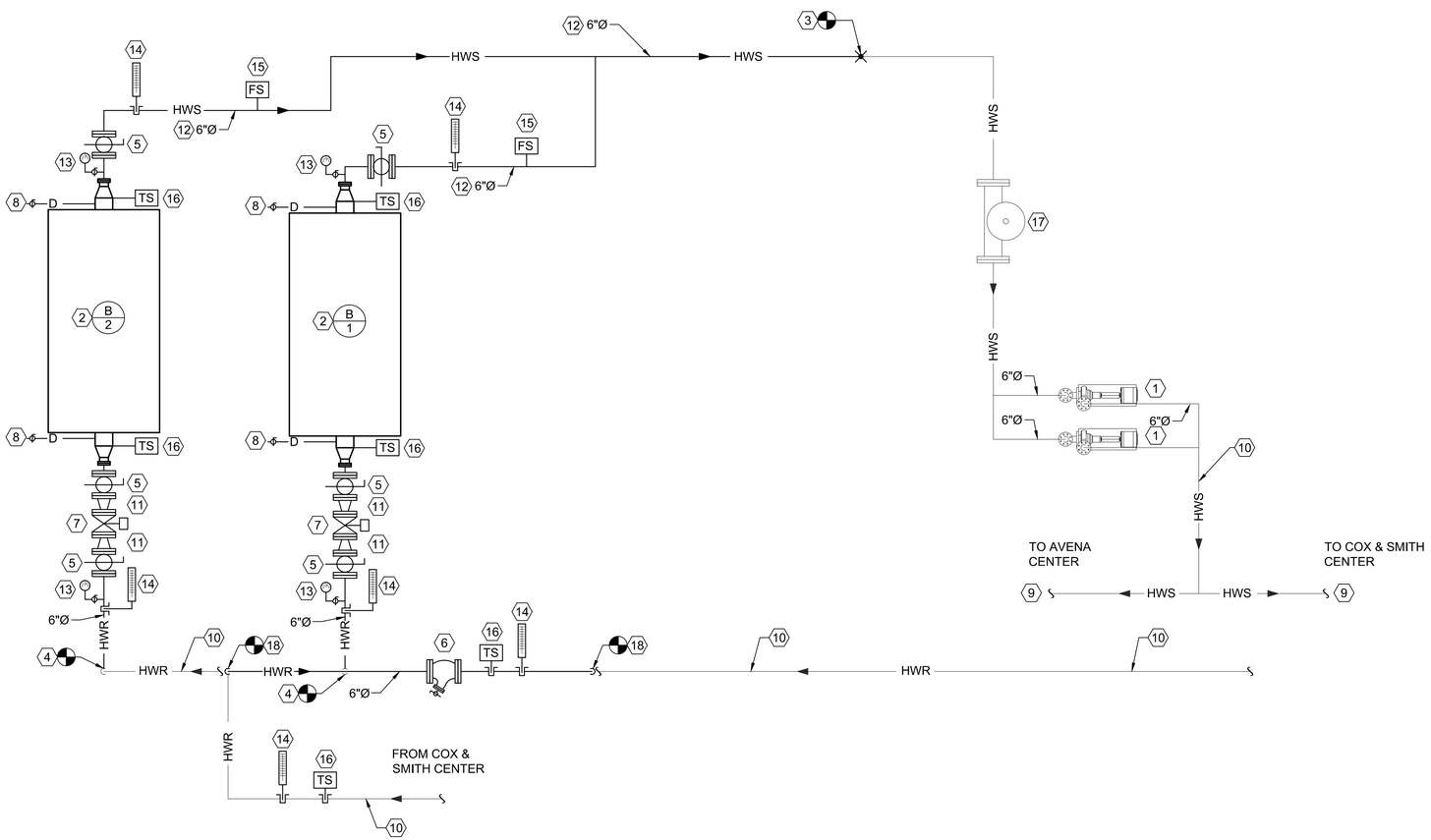

A2 FLOW DIAGRAM
SCALE: NONE

SHEET NOTES:

1. EXISTING HOT WATER PUMPS.
2. NEW GAS FIRED, FLEX TUBE, HOT WATER KNOCK DOWN BOILER.
3. CONNECT TO EXISTING HWS AT THIS POINT AND EXTEND NEW 6"Ø SCHEDULE 40 PIPING FROM THIS POINT TO NEW BOILERS.
4. CONNECT TO EXISTING HWR AT THIS POINT AND EXTEND NEW 6"Ø SCHEDULE 40 PIPING FROM THIS POINT TO NEW BOILERS.
5. PROVIDE NEW 150# - 6" FLANGED BALL VALVES AND COMPANION FLANGES.
6. PROVIDE NEW 150# - 6" FLANGED STRAINER AND COMPANION FLANGES. PROVIDE BLOWDOWN PIPING AND BALL VALVE WITH HOSE CONNECTION.
7. PROVIDE NEW 150# FLANGED CONTROL VALVES.
8. PROVIDE NEW 2"Ø DRAINS AND BALL VALVES WITH HOSE END CONNECTION LOCATED ON THE BOTTOM AT BOILER CONNECTION.
9. EXISTING HWS TO SYSTEM SHALL REMAIN.
10. EXISTING HWR FROM SYSTEM SHALL REMAIN.
11. REDUCERS SIZE FROM LINE SIZE TO CONTROL VALVE SIZING.
12. PROVIDE NEW 6"Ø SCH 40 HWS PIPING FROM NEW BOILERS TO EXISTING PIPING.
13. PROVIDE NEW PRESSURE GAUGES IN THIS APPROXIMATE LOCATION.
14. PROVIDE NEW THERMOMETERS IN THIS APPROXIMATE LOCATION.
15. PROVIDE NEW THRED-O-LET AND FLOW SWITCH.
16. PROVIDE NEW THRED-O-LET AND TEMPERATURE SENSOR.
17. EXISTING AIR SEPARATOR SHALL REMAIN.
18. PROVIDE NEW PIPING FROM NEW ELL TO NEW TIE-IN UPSTREAM OF BOILER #1.

State of Utah
Department of Administrative Services
Division of Facilities Construction & Management
4110 State Office Building
Salt Lake City, Utah 84114
Phone: (801) 538 - 3018
Fax: (801) 538 - 3267
Internet: http://www.dfcm.state.ut.us

CONSULTANTS

WHW ENGINEERING INC.
PROFESSIONAL MECHANICAL ENGINEERING
8619 Sandy Parkway Suite 101
SANDY, UTAH 84070
(801)466-4021, FAX 466-8536
EMAIL: excellence@whw-engineering.com

CODE REVIEW STAMP

DIVISION OF FACILITIES CONSTRUCTION AND MANAGEMENT
REVIEWED FOR CODE COMPLIANCE
SIGNATURE:
DATE: 03/10/2015

PROJECT NAME & ADDRESS

DSU BURNS ARENA BOILER REPLACEMENTS

DFCM#14281640

St. George, Utah

MARK	DATE	REVISION

PROJECT MANAGER: SLW
DRAWN BY: LGD
CHECKED BY: WP
DATE: 02/27//15
WHW JOB NO.: 14053

PROFESSIONAL ENGINEER 02/27/15 WINWARD M. PACKER No. 375080 STATE OF UTAH

SHEET TITLE

FLOW DIAGRAM

SHEET NO.

ME701

ALL IDEAS, DESIGNS, ARRANGEMENTS AND PLANS INDICATED OR REPRESENTED BY THIS DRAWING ARE OWNED BY AND THE PROPERTY OF WHW ENGINEERING INC. AND WERE CREATED, EVOLVED, AND DEVELOPED FOR USE ON AND IN CONNECTION WITH THE SPECIFIED PROJECT. NONE OF THE IDEAS, DESIGNS, ARRANGEMENTS OR PLANS SHALL BE USED BY OR DISCLOSED TO ANY PERSON, FIRM, OR CORPORATION FOR ANY PURPOSE WHATSOEVER WITHOUT WRITTEN CONSENT OF WHW ENGINEERING INC. WRITTEN DIMENSIONS ON THESE DRAWINGS SHALL HAVE PRECEDENCE OVER SCALE DIMENSIONS. CONTRACTORS SHALL VERIFY AND BE RESPONSIBLE FOR ALL DIMENSIONS AND CONDITIONS ON THE JOB AND THE OFFICE MUST BE NOTIFIED OF ANY VARIATION FROM THE DIMENSIONS AND CONDITIONS SHOWN BY THESE DRAWINGS. WARNING: REPRODUCTION HEREOF IS A CRIMINAL OFFENSE UNDER 18 U.S.C. SEC. 506. UNAUTHORIZED DISCLOSURE MAY CONSTITUTE TRADE SECRET MISAPPROPRIATION IN VIOLATION OF U.C.A.§ 13-1-1 ET. SEQ. AND OTHER LAWS.