State of Utah

GARY R. HERBERT
Governor

SPENCER J. COX
Lieutenant Governor

Department of Administrative Services
KIMBERLY K. HOOD
Executive Director

Division of Facilities Construction and Management
BRUCE WHITTINGTON
Interim Director

Addendum No. 2

Date: March 27, 2015

To: Shortlisted Contractors

From: Matthias Mueller – Project Manager

Reference: D13 Classroom Building Remodel – Davis Campus
Weber State University – Clearfield, Utah
DFCM Project No. 14297810

Subject: **Addendum No. 2**

Pages	Addendum Cover Sheet	1	page
	Architect's Addendum No. 1	146	pages
	Total	147	pages

Note: This Addendum shall be included as part of the Contract Documents. Items in this Addendum apply to all drawings and specification sections whether referenced or not involving the portion of the work added, deleted, modified, or otherwise addressed in the Addendum. Acknowledge receipt of this Addendum in the space provided on the Bid Form. Failure to do so may subject the Bidder to Disqualification.

2.1 SCHEDULE CHANGES: There are no Project Schedule changes.

2.2 GENERAL ITEMS: See attached Architect's Addendum No. 1 dated March 27, 2015.

Weber State University

D13 CLASSROOM REMODEL

Project No. 2014.095.00
DFCM Project No. 14297810

ADDENDUM NO. 1

March 27, 2015

The original specifications and drawings, dated March 9, 2015 for the project referenced above are amended in the Addendum No. 1, dated March 27, 2015.

Receipt of this addendum shall be acknowledged by inserting its number and date in the space provided on the bid form.

This addendum consists of the following:

Attachments:

Structural, Mechanical/Plumbing and Electrical Narratives

Specification Sections:

SPECIFICATION INDEX
055213 PIPE AND TUBE RAILINGS
064116 PLASTIC-LAMINATE-FACED ARCHITECTURAL CABINETS
087100 DOOR HARDWARE
088000 GLAZING
104413 FIRE PROTECTION CABINETS
104416 FIRE EXTINGUISHERS
122413 ROLLER WINDOW SHADES
230700 MECHANICAL INSULATION
233400 AIR HANDLING FANS
235700 HEAT TRANSFER

Drawing sheets:
G100-GI102,G105,C100-C300,AD101-102,AE201-204,AE209-AE211,AE300,AE406,AE500
SE001-002, SB101, SB501-502, SF102-103, SF201, SF501
M002, FP101-102, MH101, MH103, MH601-602, PL601
ED101-103, EP102-103, EP601-602, EL101, EL601

Architectural and Civil Addendum Items:

AD1-A01 SPECIFICATION INDEX
A new specification index is included.

AD1-A02 055213 PIPE AND TUBE RAILINGS
This specification supports the stair railings that have been added to the work.

AD1-A03 064116 PLASTIC-LAMINATE-FACED ARCHITECTURAL CABINETS
The approved fabricators list has been removed opening the bid to all those who can meet specified requirements. Straw-based particle board has also been removed from the composite wood and agrifiber products list.

AD1-A04 087100 DOOR HARDWARE
Doors 204A and 210A require new hardware types (HW types #16 and #17). This hardware type has been added to the specification.

AD1-A05 088000 GLAZING
An architectural window film has been added to the specification for use at indicated exterior windows.

AD1-A06 104413 FIRE PROTECTION CABINETS
The specification has been changed to required aluminum, not steel cabinets.

AD1-A07 104416 FIRE EXTINGUISHERS
The specification has been updated to required 10 pound, not 5 pound, extinguishers.

AD1-A08 122413 ROLLER WINDOW SHADES
Approved manufacturers have been added.

AD1-A09 G100
Added all stamps for all disciplines.

Added DFCM project number.

AD1-A10 G101
Updated index

AD1-A11 GI102
-Added final occupancy requirements.
-Added area modification equation and calculations.
-Added note regarding rated ceiling in elevator equipment room.
-Added section of mechanical penetration requirement and updated rated wall information at main mechanical distribution.

AD1-A12 G105
A site accessibility plan has been added.

AD1-A13 C100, C200, C300
Existing ADA parking stalls and surrounding area need to be re-graded and re-striped. An accessible route (sidewalk) is also being constructed from the ADA stalls to the public sidewalk.

AD1-A14 AD101
Added notes and callouts for D10, D11, D12 and D13

AD1-A15 AD102
-Added notes and callouts for D10, D11, D12 and D13
-Added note about investigational demolition required in Electrical 208B.

AD1-A16 AE201
-Added note identifying interior finish mock up room.
-Added section call out at main mechanical distribution.
-Added railing elevation/section callouts for new railings for existing stairs.

AD1-A17 AE202
-Added note identifying interior finish mock up room.
-Added section call out at main mechanical distribution.

-Added railing elevation/section callouts for new railings for existing stairs.
-Changed door swing, frame and hardware on door 210A.
-Added detail callouts for mullion to glass locations.
-Added ADA operator for door 204A.
-Door hardware updated on schedule.

AD1-A18 AE203 – AE 204
Added deflection track/fire trak, notes and details

AD1-A19 AE209
-Added note for projector location coordination.
-Added Ceiling Type C Detail.

AD1-A20 AE210
Added note for projector location coordination.

AD1-A21 AE211
Added roof safety railing at existing roof hatch.

AD1-A22 AE300
Updated EIFS repair notes.

AD1-A23 AE406
Stair railing added to elevation.

AD1-A24 AE500
-Added railing elevations 6, 7 and 8/AE500.
-Updated detail 4/AE500.
-Add detail 9/AE500.

End of Architectural Addendum No. 1

See Structural, Mechanical and Electrical Addendum on following pages.

REAVELEY
ENGINEERS + ASSOCIATES
Consulting Structural Engineers

Weber State University D13 Classroom Building Remodel

Addendum #01

Structural Revisions
March 27, 2015

SB101 Footing and Foundation Plan

1. Added top of footing elevations to braced frames along grid A and at grid point 6/C as clouded on sheet.

SB501 Footing and Foundation Details

1. Revised details A1, A3, A5, B3, B5, C1, D1, D3, & D5 as clouded on sheet.

SB502 Footing and Foundation Details

1. Revised detail D3 as clouded on sheet.

SF201 Braced Frame Elevations

1. Revised buckling-restrained brace schedule as clouded on sheet.
    a. Revised cap plate thickness of BRB 1.50 at grids 3-4 and BRB 1.50 at grids 5-6.
    b. Revised note 1.
    c. Revised note 3.
    d. Revised note 4.
    e. Revised note 5.
    f. Added note 9.

SF501 Framing Details

1. Revised details B1, B2, C2, C4, D2, D3, & D4 as clouded on sheet.
    a. Revised size of angle framing opening in details B1, B2, C2, C4, D2, D3, & D4.
    b. Added note to details B1 & C4.

End of Addendum #01

Attachments: SE001, SE002, SB101, SB501, SB502, SF102, SF103, SF201, & SF501.

P: 801.486.3883
F: 801.485.0911

675 E. 500 S. Suite 400
Salt Lake City, Utah 84102
www.reaveley.com

COLVIN ENGINEERING ASSOCIATES

MECHANICAL ADDENDUM 1

Job Name and Location: WSU Building D13 - Ogden, Utah

CEA PROJECT NO. 2014-114.00

Date: 3/27/15

All contractors submitting proposals for this project shall be governed by the following revisions, changes, and explanations to the bidding documents. Bids shall be submitted in accordance with the following:

Item No.	Add, Delete or Clarify	Specification Section or Drawing No.	Reference / Description:
1	Clarify	FP101	Updated code reference to 2012
2	Clarify	FP102	Updated code reference to 2012
3	Clarify	MH103	Revised heat pump #1, 2, 3 &4 locations on roof.
4	Clarify	MH103	Added section of air handler on roof
5	Clarify	MH602	Updated filter to MERV 9 in ERV schedule
6	Clarify	MH602	Updated brake horsepower
7	Clarify	230700	Clarify energy code is ASHRAE 90.1 2010
8	Add	233400	Add specification section “Air handling fans”
9	Clarify	M002	Updated Comcheck form
10	Clarify	MH601	Clarify model number of VRF fan coil FC-W12
11	Clarify	MH601	Clarify Branch Controller pipe connection size.
12	Clarify	PL601	Clarify water heater efficiency as COP.
13	Clarify	235700	Clarify energy recovery unit specification.
14	Clarify	MH101	Clarify new exhaust duct connection location to existing duct over elevator equipment room.

PRODUCT SUBSTITUTIONS / PRIOR APPROVALS

Item No.	Specification Section	Product Type	Alternate Manufacturers
1	233713	Registers and Grilles	Carnes
2	233400	Inline cabinet transfer fan	Broan Commercial
3	233410	Utility set exhaust fan	Carnes
4	224440	Low Flow Urinal	American Standard
5	224440	Piston type Flush Valves	American Standard
6	224440	Toilet Seats	American Standard
7	233410	Fume Exhaust Fans	Greenheck
8	235700	Energy Recovery Ventilators	Greenheck, Temtrol, Venmar

The above named alternate equipment manufacturers stand approved in name only. Approval here in no way relieves the supplier from complying with all other engineering, weight spatial, and quality requirements of equipment indicated in the contract documents. Contractors using products from the above named alternate manufacturers shall refer to Specification Section 230500 for detailed contractor responsibilities related to the use of alternate brands not used as the Basis of Design.

END OF ADDENDUM NO. 1

SPECTRUM ENGINEERS
Mechanical Engineering
Electrical Engineering
Technology Engineering
Acoustical Engineering
Lighting Design
Theatre Design
Fire Protection Engineering
Building Commissioning

Salt Lake City | Phoenix | St. Louis | Baltimore
[p] 800-678-7077
www.spectrum-engineers.com

WSU D13 Remodel – Addendum #1

To:	Clio Rayner	**phone:**	(801) 521-8600
Company:	GSBS	**email:**	crayner@gsbsarchitects.com
		copied:	
Job:	WSU Davis Campus D13 Remodel		
Job No.	14297810 2014.095.00		
Re:	Addendum #1		
From:	David Wesemann, PE	**phone:**	(801) 401-8468
Date:	3/26/2015	**email:**	dew@spectrum-engineers.com
Distributed Via: Email		**page:**	1 of 3

Please issue the following items as part of Addendum #1:

I. SPECIFICATIONS

Section 275313, Clock Systems

1. Remove this section from the specification. Clock systems will be Owner-furnished and Owner-installed on this project.

II. DRAWINGS

Sheets ED101, ED102 (refer to attached sheets)

1. Revised routing of existing telecommunications entrance lines to more closely match existing conditions (field verification still required).
   This change also applies to EY101 / EY102.

Sheet ED103 (refer to attached sheet)

1. Updated location and sizes of disconnect and transformer to more closely match existing conditions.
2. Added note to relocate existing transformer, disconnect and feeder wiring.

Sheet EP101

1. Changed circuit L5-60 in Engineering Space 121 to L5-4.
2. Changed circuit L5-23 in Engineering Space 115 to L5-23.

Sheet EP102 (refer to attached sheet)

1. Updated Biotech /Chem Prep/Storage room 222 to coordinate with Architectural layout.
2. Removed outlet on South West wall of Biology Lab 205 due to it being covered by cubby millwork.
3. Updated electrical room to match existing conditions.
4. Added j-box for existing outdoor sign.
5. Removed equipment and power for synchronized clocks from Data 216.
6. Removed 1 microwave outlet in Faculty Room 201.
7. Added tag "F" next to outlet mounted on teacher's desk in Shared Classroom 208.
8. Added j-box, conduit, and conductors to provide power to Unisex 204 ADA door and actuators. Add to circuit L10-2.

Sheet EP103 (refer to attached sheet)

1. Added circuits to power existing to remain equipment in Roof Penthouse.
2. Removed Keynote tags #2 and #3 that were just west of Roof Penthouse.
3. Updated location of heat pumps on roof top to match mechanical.
4. Moved transformer and disconnect so that the equipment was clear of DOAS-1. Added keynote to coordinate with mechanical installers equipment submittals and move equipment to an appropriate location if necessary.

Sheet EP111

1. Changed CNC equipment disconnect to fused disconnect to match equipment schedule.

Sheet EP601 (refer to attached sheet)

1. Updated One-line to include work to relocate transformer and disconnect, and provide new feeders.

Sheet EP602 (refer to attached sheet)

1. Updated equipment schedule to match mechanical equipment schedules.

Sheet EL101 (refer to attached sheet)

1. Added lights in DX-1 fixtures to vestibule 100A and outside of Men's and Women's Bathrooms.
2. Also added an occupancy sensor in vestibule 100A.

Sheet EL601 (refer to attached sheet)

1. Approved equivalents added to fixture schedule.

Sheet EY101, EY102

1. Clocks shown are Owner-furnished and Owner-installed.

Sheet EY102

1. Added note next to CP in Biology Lab 205 to have contractor install control panel back box above AV equipment rack and to coordinate with architectural elevations and owner/architect prior to rough-in.

Attachments:

ED101 - MAIN LEVEL ELECTRICAL DEMOLITION PLAN
ED102 - SECOND LEVEL ELECTRICAL DEMOLITION PLAN
ED103 - PENTHOUSE-ROOF ELECTRICAL DEMOLITION PLAN
EP102 - SECOND LEVEL POWER PLAN
EP103 - PENTHOUSE-ROOF POWER PLAN
EP601 - ONE-LINE DIAGRAMS
EP602 - EQUIPMENT SCHEDULE
EL101 - MAIN LEVEL LIGHTING PLAN
EL601 - INTERIOR LIGHTING FIXTURE SCHEDULE

End of Addendum

Table of Contents

SPECIFICATIONS GROUP

General Requirements Subgroup

DIVISION 00 – PROCUREMENT AND CONTRACTING REQUIREMENTS

000000	DFCM 2005 GENERAL CONDITIONS	51
000000	DFCM-002 SUPPLEMENTAL GENERAL CONDITIONS FOR HEALTH INSURANCE	4
000000	DFCM-003 SUPPLEMENTAL GENERAL CONDITIONS REGARDING ILLEGAL IMMIGRATION	4
000000	DFCM-004 SUPPLEMENTAL GENERAL CONDITIONS FOR DRUG AND ALCOHOL TESTING	2
000000	DFCM-005 SUPPLEMENTAL GENERAL CONDITIONS FOR CONSTRUCTION AGREEMENTS	4
000000	DFCM-006 SUPPLEMENTAL GENERAL CONDITIONS FOR BID BONDS	1

DIVISION 01 - GENERAL REQUIREMENTS

012300	ALTERNATES	2
012500	SUBSTITUTION PROCEDURES	4
013100	PROJECT MANAGEMENT AND COORDINATION	11
013300	SUBMITTAL PROCEDURES	11
014000	QUALITY REQUIREMENTS	11
014200	REFERENCES	17
015000	TEMPORARY FACILITIES AND CONTROLS	8
016000	PRODUCT REQUIREMENTS	5
017300	EXECUTION	10
017419	CONSTRUCTION WASTE MANAGEMENT AND DISPOSAL	3
017700	CLOSEOUT PROCEDURES	7
017823	OPERATION AND MAINTENANCE DATA	9
017839	PROJECT RECORD DOCUMENTS	4
017900	DEMONSTRATION AND TRAINING	7
019113	GENERAL COMMISSIONING REQUIREMENTS	15

Facility Construction Subgroup

DIVISION 02 – EXISTING CONDITIONS

024119	SELECTIVE DEMOLITION	6

DIVISION 03 – CONCRETE

033000	CAST-IN-PLACE CONCRETE	18

DIVISION 05 – METALS

051200	STRUCTURAL STEEL FRAMING	10
051250	BUCKLING RESTRAINED BRACES	9

053100	STEEL DECKING	4
055000	METAL FABRICATIONS	8
055213	PIPE AND TUBE STEEL RAILING	7

DIVISION 06 – WOOD, PLASTICS, AND COMPOSITES

064116	PLASTIC-LAMINATE-FACED ARCHITECTURAL CABINETS	8

DIVISION 07 – THERMAL AND MOISTURE PROTECTION

078413	PENETRATION FIRESTOPPING	7
078446	FIRE RESISTIVE JOINT SYSTEMS	4
079200	JOINT SEALANTS	10

DIVISION 08 – OPENINGS

081113	HOLLOW METAL DOORS AND FRAMES	10
081416	FLUSH WOOD DOORS	7
083113	ACCESS DOORS AND FRAMES	4
084213	ALUMINUM-FRAMED ENTRANCES	7
087100	DOOR HARDWARE	27
088000	GLAZING	9

DIVISION 09 – FINISHES

092216	NON-STRUCTURAL METAL FRAMING	8
092900	GYPSUM BOARD	7
093013	CERAMIC TILING	12
095113	ACOUSTICAL PANEL CEILINGS	9
096513	RESILIENT BASE AND ACCESSORIES	6
096519	RELILIENT TILE FLOORING	5
096813	TILE CARPETING	8
097200	WALL COVERINGS	4
097723	FABRIC-WRAPPED PANELS	4
099123	INTERIOR PAINTING	8

DIVISION 10 – SPECIALTIES

101100	VISUAL DISPLAY UNITS	7
102600	WALL AND DOOR PROTECTION	4
102800	TOILET, BATH, AND LAUNDRY	5
104413	FIRE EXTINGUISHER CABINETS	5
104416	FIRE EXTINGUISHERS	3

DIVISION 11 – EQUIPMENT

115213	PROJECTION SCREENS	3
115310	LABORATORY CASEWORK AND OTHER FURNISHINGS	8
115313	LABORATORY FUME HOODS	9

DIVISION 12 – FURNISHINGS

122413	ROLLER WINDOW SHADES	6
123216	MANUFACTURED WOOD LABORATORY CASEWORK	11
123553	METAL LABORATORY CASEWORK AND OTHER FURNISHINGS	10

123623.13	PLASTIC-LAMINATE-CLAD COUNTERTOPS	6

DIVISION 22 – PLUMBING

221410	PLUMBING PIPING	10
221411	DISINFECTING WATER SUPPLY SYSTEM	6
221430	PLUMBING SPECIALTIES	13
224440	PLUMBING FIXTURES	11
224450	PLUMBING EQUIPMENT	5
224460	SPECIAL PLUMBING EQUIPMENT SYSTEMS	4

DIVISION 23 – HEATING VENTILATING AND AIR CONDITIONING

230500	BASIC MECHANICAL REQUIREMENTS	22
230529	BASIC MECHANICAL MATERIALS AND METHODS	33
230540	MECHANICAL SOUND AND VIBRATION CONTROL	24
230548	MECHANICAL SEISMIC CONTROL	7
230593	TESTING, ADJUSTING AND BALANCING	7
230700	MECHANICAL INSULATION	10
230900	ELECTRONIC CONTROLS	49
230910	LABORATORY AIRFLOW CONTROL	22
231123	NATURAL GAS SYSTEMS	7
232120	PROCESS PIPING	7
233300	DUCTWORK AND ACCESSORIES	18
123400	AIR HANDLING FANS	4
233410	SPECIAL EXHAUST SYSTEMS	4
233600	AIR TERMINAL UNITS	3
233713	AIR INLETS AND OUTLETS	5
235700	HEAT TRANSFER	4
236400	REFRIGERATION	7
238146	HEAT PUMPS	16

DIVISION 26 – ELECTRICAL

260500	COMMON WORK RESULTS FOR ELECTRICAL	4
260519	LOW-VOLTAGE ELECTRICAL POWER CONDUCTORS AND CABLES	5
260526	GROUNDING AND BONDING FOR ELECTRICAL SYSTEMS	6
260529	HANGERS AND SUPPORTS FOR ELECTRICAL SYSTEMS	5
260533	RACEWAYS AND BOXES FOR ELECTRICAL SYSTEMS	12
260536	CABLE TRAYS FOR ELECTRICAL SYSTEMS	6
260548	SEISMIC CONTROLS FOR ELECTRICAL SYSTEMS	8
260553	IDENTIFICATION FOR ELECTRICAL SYSTEMS	9
260923	LIGHTING CONTROL DEVICES	7
262416	PANELBOARDS	8
262726	WIRING DEVICES	7
262726.1	WIRING DEVICES SCHEDULE	2
262813	FUSES	4
262816	ENCLOSED SWITCHES AND CIRQUIT BREAKERS	7
262913	ENCLOSED CONTROLLERS	9
264313	SURGE PROTECTION FOR LOW-VOLTAGE ELECTRICAL POWER CIRCUITS	5
265100	INTERIOR LIGHTING	11

DIVISION 27 – COMMUNICATIONS
~~275313 CLOCK SYSTEMS 4~~

DIVISION 28 – ELECTRONIC SAFETY AND SECURITY
283111 DIGITAL, ADDRESSABLE FIRE-ALARM SYSTEM 19

END OF TABLE OF CONTENTS

SECTION 055213 - PIPE AND TUBE RAILINGS

PART 1 - GENERAL

1.1 RELATED DOCUMENTS

A. Drawings and general provisions of the Contract, including General and Supplementary Conditions and Division 01 Specification Sections, apply to this Section.

1.2 SUMMARY

A. This Section includes the following:

1. Steel pipe railings.

1.3 PERFORMANCE REQUIREMENTS

A. General: In engineering railings to withstand structural loads indicated, determine allowable design working stresses of railing materials based on the following:

1. Steel: 72 percent of minimum yield strength.

B. Structural Performance: Provide railings capable of withstanding the effects of gravity loads and the following loads and stresses within limits and under conditions indicated:

1. Handrails:

a. Uniform load of 50 lbf/ ft. applied in any direction.
b. Concentrated load of 200 lbf applied in any direction.
c. Uniform and concentrated loads need not be assumed to act concurrently.

2. Top Rails of Guards:

a. Uniform load of 50 lbf/ ft. applied in any direction.
b. Concentrated load of 200 lbf applied in any direction.
c. Uniform and concentrated loads need not be assumed to act concurrently.

3. Infill of Guards:

a. Concentrated load of 200 lbf applied horizontally on an area of 1 sq. ft..

C. Thermal Movements: Provide exterior railings that allow for thermal movements resulting from the following maximum change (range) in ambient and surface temperatures by preventing buckling, opening of joints, overstressing of components, failure of connections, and other

detrimental effects. Base engineering calculation on surface temperatures of materials due to both solar heat gain and nighttime-sky heat loss.

1. Temperature Change (Range): 120 deg F, ambient; 180 deg F, material surfaces.

D. Control of Corrosion: Prevent galvanic action and other forms of corrosion by insulating metals and other materials from direct contact with incompatible materials.

1.4 SUBMITTALS

A. Product Data: For the following:

1. Grout, anchoring cement, and paint products.

B. Shop Drawings: Include plans, elevations, sections, details, and attachments to other work.

1. For installed products indicated to comply with design loads, include structural analysis data signed and sealed by the qualified professional engineer responsible for their preparation.

C. Welding certificates.

1.5 QUALITY ASSURANCE

A. Source Limitations: Obtain each type of railing through one source from a single manufacturer.

B. Welding: Qualify procedures and personnel according to the following:

1. AWS D1.1, "Structural Welding Code--Steel."

1.6 PROJECT CONDITIONS

A. Field Measurements: Verify actual locations of walls, existing stair components and other construction contiguous with railings by field measurements before fabrication and indicate measurements on Shop Drawings.

1.7 COORDINATION AND SCHEDULING

A. Coordinate installation of anchorages for railings. Furnish setting drawings, templates, and directions for installing anchorages, including sleeves, concrete inserts, anchor bolts, and items with integral anchors, that are to be embedded in concrete or masonry. Deliver such items to Project site in time for installation.

PART 2 - PRODUCTS

2.1 METALS, GENERAL

A. Metal Surfaces, General: Provide materials with smooth surfaces, without seam marks, roller marks, rolled trade names, stains, discolorations, or blemishes.

B. Brackets, Flanges, and Anchors: Cast or formed metal of same type of material and finish as supported rails, unless otherwise indicated.

2.2 STEEL AND IRON

A. Pipe: ASTM A 53/A 53M, Type F or Type S, Grade A, Standard Weight (Schedule 40), unless another grade and weight are required by structural loads.

1. Provide painted finish.

2.3 FASTENERS

A. Fasteners for Anchoring Railings to Other Construction: Select fasteners of type, grade, and class required to produce connections suitable for anchoring railings to other types of construction indicated and capable of withstanding design loads.

B. Fasteners for Interconnecting Railing Components:
1. Provide concealed fasteners for interconnecting railing components and for attaching them to other work, unless exposed fasteners are unavoidable or are the standard fastening method for railings indicated.

2.4 MISCELLANEOUS MATERIALS

A. Welding Rods and Bare Electrodes: Select according to AWS specifications for metal alloy welded.

B. Nonshrink, Nonmetallic Grout: Factory-packaged, nonstaining, noncorrosive, nongaseous grout complying with ASTM C 1107. Provide grout specifically recommended by manufacturer for interior and exterior applications.

C. Anchoring Cement: Factory-packaged, nonshrink, nonstaining, hydraulic-controlled expansion cement formulation for mixing with water at Project site to create pourable anchoring, patching, and grouting compound.

1. Water-Resistant Product: At exterior locations provide formulation that is resistant to erosion from water exposure without needing protection by a sealer or waterproof coating and that is recommended by manufacturer for exterior use.

2.5 FABRICATION

A. General: Fabricate railings to comply with requirements indicated for design, dimensions, member sizes and spacing, details, finish, and anchorage.

B. Assemble railings in the shop to greatest extent possible to minimize field splicing and assembly. Disassemble units only as necessary for shipping and handling limitations. Clearly mark units for reassembly and coordinated installation. Use connections that maintain structural value of joined pieces.

C. Cut, drill, and punch metals cleanly and accurately. Remove burrs and ease edges to a radius of approximately 1/32 inch, unless otherwise indicated. Remove sharp or rough areas on exposed surfaces.

D. Form work true to line and level with accurate angles and surfaces.

E. Fabricate connections that will be exposed to weather in a manner to exclude water. Provide weep holes where water may accumulate.

F. Cut, reinforce, drill, and tap as indicated to receive finish hardware, screws, and similar items.

G. Connections: Fabricate railings with welded connections, unless otherwise indicated.

H. Welded Connections: Cope components at connections to provide close fit, or use fittings designed for this purpose. Weld all around at connections, including at fittings.

1. Use materials and methods that minimize distortion and develop strength and corrosion resistance of base metals.
2. Obtain fusion without undercut or overlap.
3. Remove flux immediately.
4. At exposed connections, finish exposed surfaces smooth and blended so no roughness shows after finishing and welded surface matches contours of adjoining surfaces.

I. Form changes in direction as follows:

1. By bending.

J. Form simple and compound curves by bending members in jigs to produce uniform curvature for each repetitive configuration required; maintain cross section of member throughout entire bend without buckling, twisting, cracking, or otherwise deforming exposed surfaces of components.

K. Close exposed ends of railing members with prefabricated end fittings.

L. Provide wall returns at ends of wall-mounted handrails, unless otherwise indicated. Close ends of returns unless clearance between end of rail and wall is 1/4 inch or less.

M. Brackets, Flanges, Fittings, and Anchors: Provide wall brackets, flanges, miscellaneous fittings, and anchors to interconnect railing members to other work, unless otherwise indicated.

1. At brackets and fittings fastened to plaster or gypsum board partitions, provide fillers made from crush-resistant material, or other means to transfer wall loads through wall finishes to structural supports and prevent bracket or fitting rotation and crushing of substrate.

N. Provide inserts and other anchorage devices for connecting railings to concrete or masonry work. Fabricate anchorage devices capable of withstanding loads imposed by railings. Coordinate anchorage devices with supporting structure.

O. Toe Boards: Where indicated, provide toe boards at railings around openings and at edge of open-sided floors and platforms. Fabricate to dimensions and details indicated.

2.6 FINISHES, GENERAL

A. Comply with NAAMM's "Metal Finishes Manual for Architectural and Metal Products" for recommendations for applying and designating finishes.

PART 3 - EXECUTION

3.1 EXAMINATION

A. Examine plaster and gypsum board assemblies, where reinforced to receive anchors, to verify that locations of concealed reinforcements have been clearly marked for Installer. Locate reinforcements and mark locations if not already done.

3.2 INSTALLATION, GENERAL

A. Fit exposed connections together to form tight, hairline joints.

B. Perform cutting, drilling, and fitting required for installing railings. Set railings accurately in location, alignment, and elevation; measured from established lines and levels and free of rack.

1. Do not weld, cut, or abrade surfaces of railing components that have been coated or finished after fabrication and that are intended for field connection by mechanical or other means without further cutting or fitting.
2. Set posts plumb within a tolerance of 1/16 inch in 3 feet.
3. Align rails so variations from level for horizontal members and variations from parallel with rake of steps and ramps for sloping members do not exceed 1/4 inch in 12 feet.

C. Adjust railings before anchoring to ensure matching alignment at abutting joints.

D. Fastening to In-Place Construction: Use anchorage devices and fasteners where necessary for securing railings and for properly transferring loads to in-place construction.

3.3 RAILING CONNECTIONS

A. Welded Connections: Use fully welded joints for permanently connecting railing components. Comply with requirements for welded connections in Part 2 "Fabrication" Article whether welding is performed in the shop or in the field.

B. Expansion Joints: Install expansion joints at locations indicated but not farther apart than required to accommodate thermal movement. Provide slip-joint internal sleeve extending 2 inches beyond joint on either side, fasten internal sleeve securely to 1 side, and locate joint within 6 inches of post.

3.4 ANCHORING POSTS

A. Form or core-drill holes not less than 5 inches deep and 3/4 inch larger than OD of post for installing posts in concrete. Clean holes of loose material, insert posts, and fill annular space between post and concrete with nonshrink, nonmetallic grout or anchoring cement, mixed and placed to comply with anchoring material manufacturer's written instructions.

B. Cover anchorage joint with flange of same metal as post, attached to post with set screws.

C. Leave anchorage joint exposed; wipe off surplus anchoring material; and leave 1/8-inch buildup, sloped away from post.

3.5 ANCHORING RAILING ENDS

A. Anchor railing ends to concrete and masonry with round flanges connected to railing ends and anchored to wall construction with anchors and bolts.

3.6 ATTACHING HANDRAILS TO WALLS

A. Attach handrails to wall with wall brackets. Provide brackets with 1-1/2-inch clearance from inside face of handrail and finished wall surface.

1. Use type of bracket with flange tapped for concealed anchorage to threaded hanger bolt.
2. Use type of bracket with predrilled hole for exposed bolt anchorage.

B. Locate brackets as indicated or, if not indicated, at spacing required to support structural loads.

C. Secure wall brackets to building construction as follows:

1. For concrete and solid masonry anchorage, use drilled-in expansion shields and hanger or lag bolts.

3.7 ADJUSTING AND CLEANING

A. Touchup Painting: Immediately after erection, clean field welds, bolted connections, and abraded areas of shop paint, and paint exposed areas with same material as used for shop painting to comply with SSPC-PA 1 for touching up shop-painted surfaces.

B. Touchup Painting: Cleaning and touchup painting of field welds, bolted connections, and abraded areas of shop paint are specified in Division 09 painting Sections.

3.8 PROTECTION

A. Protect finishes of railings from damage during construction period with temporary protective coverings approved by railing manufacturer. Remove protective coverings at time of Substantial Completion.

B. Restore finishes damaged during installation and construction period so no evidence remains of correction work. Return items that cannot be refinished in the field to the shop; make required alterations and refinish entire unit, or provide new units.

END OF SECTION 055213

SECTION 064116 - PLASTIC-LAMINATE-FACED ARCHITECTURAL CABINETS

PART 1 - GENERAL

1.1 RELATED DOCUMENTS

A. Drawings and general provisions of the Contract, including General and Supplementary Conditions and Division 01 Specification Sections, apply to this Section.

1.2 SUMMARY

A. Section Includes:

1. Plastic-laminate-faced architectural cabinets.
2. Wood furring, blocking, shims, and hanging strips for installing plastic-laminate-faced architectural cabinets unless concealed within other construction before cabinet installation.

B. Related Requirements:

1. Section 061000 "Rough Carpentry" for wood furring, blocking, shims, and hanging strips required for installing cabinets and concealed within other construction before cabinet installation.

1.3 ACTION SUBMITTALS

A. Product Data: For each type of product, including panel products high-pressure decorative laminate, adhesive for bonding plastic and cabinet hardware and accessories.

B. Shop Drawings: Show location of each item, dimensioned plans and elevations, large-scale details, attachment devices, and other components.

1. Show locations and sizes of furring, blocking, and hanging strips, including concealed blocking and reinforcement specified in other Sections.
2. Show locations and sizes of cutouts and holes for electrical switches and outlets and other items installed in architectural plastic-laminate cabinets.
3. Apply AWI Quality Certification Program label to Shop Drawings.

C. Samples for Verification:

1. Plastic laminates, 8 by 10 inches, for each color, pattern, and surface finish.
2. Exposed cabinet hardware and accessories, one unit for each type and finish.

1.4 INFORMATIONAL SUBMITTALS

A. Qualification Data: For Installer and fabricator.

B. Product Certificates: For each type of product.

C. Woodwork Quality Standard Compliance Certificates: AWI Quality Certification Program certificates.

1.5 QUALITY ASSURANCE

A. Fabricator Qualifications: Shop that employs skilled workers who custom fabricate products similar to those required for this Project and whose products have a record of successful in-service performance. Shop is a certified participant in AWI's Quality Certification Program.

B. Installer Qualifications: Certified participant in AWI's Quality Certification Program.

C. Mockups: Build mockups to verify selections made under Sample submittals and to demonstrate aesthetic effects and set quality standards for materials and execution.

1. Build mockup of Teaching Station
2. Subject to compliance with requirements, approved mockups may become part of the completed Work if undisturbed at time of Substantial Completion.

1.6 DELIVERY, STORAGE, AND HANDLING

A. Do not deliver cabinets until painting and similar operations that could damage woodwork have been completed in installation areas. If cabinets must be stored in other than installation areas, store only in areas where environmental conditions comply with requirements specified in "Field Conditions" Article.

1.7 FIELD CONDITIONS

A. Environmental Limitations: Do not deliver or install cabinets until building is enclosed, wet work is complete, and HVAC system is operating and maintaining temperature and relative humidity at occupancy levels during the remainder of the construction period.

B. Environmental Limitations: Do not deliver or install cabinets until building is enclosed, wet work is complete, and HVAC system is operating and maintaining temperature between 60 and 90 deg F and relative humidity between 25 and 55 percent during the remainder of the construction period.

C. Field Measurements: Where cabinets are indicated to fit to other construction, verify dimensions of other construction by field measurements before fabrication, and indicate

measurements on Shop Drawings. Coordinate fabrication schedule with construction progress to avoid delaying the Work.

1. Locate concealed framing, blocking, and reinforcements that support cabinets by field measurements before being enclosed, and indicate measurements on Shop Drawings.

D. Established Dimensions: Where cabinets are indicated to fit to other construction, establish dimensions for areas where cabinets are to fit. Provide allowance for trimming at site, and coordinate construction to ensure that actual dimensions correspond to established dimensions.

1.8 COORDINATION

A. Coordinate sizes and locations of framing, blocking, furring, reinforcements, and other related units of Work specified in other Sections to ensure that cabinets can be supported and installed as indicated.

PART 2 - PRODUCTS

~~2.1 ARCHITECTURAL CABINET FABRICATORS~~

~~A. Fabricators: Subject to compliance with requirements, provide products by one of the following:~~

~~1. Anderson Mill~~
~~2. Associated Fixture.~~
~~3. Boswell Olsen~~
~~4. Fondell Woodwork~~
~~5. Fetzer's Inc.~~
~~6. Huetter Mill & Cabinet~~ Add.1

2.2 PLASTIC-LAMINATE-FACED ARCHITECTURAL CABINETS

A. Quality Standard: Unless otherwise indicated, comply with the "Architectural Woodwork Standards" for grades of architectural plastic-laminate cabinets indicated for construction, finishes, installation, and other requirements.

1. Provide labels and certificates from AWI certification program indicating that woodwork, including installation, complies with requirements of grades specified.

B. Grade: Custom

C. Type of Construction: Face frame.

D. Cabinet, Door, and Drawer Front Interface Style: Flush overlay.

E. High-Pressure Decorative Laminate: NEMA LD 3, grades as indicated or if not indicated, as required by woodwork quality standard.
   1. Manufacturers: Subject to compliance with requirements, provide products by the following, or approved equal:
      a. Wilsonart LLC.

F. Laminate Cladding for Exposed Surfaces:

   1. Horizontal Surfaces: Grade HGS.
   2. Postformed Surfaces: Grade HGP.
   3. Vertical Surfaces: Grade VGS.
   4. Edges: Grade HGS, PVC edge banding, 0.12 inch thick, matching laminate in color, pattern, and finish.
   5. Pattern Direction:

      a. PL1: Orthoganal Orientation (Non-directional).
      b. PL3: Vertical Orientation.

A. Materials for Semiexposed Surfaces:

   1. Surfaces Other Than Drawer Bodies: High-pressure decorative laminate, NEMA LD 3, Grade VGS.

      a. Edges of Plastic-Laminate Shelves: Plastic laminate edge banding, 0.12 inch thick, matching laminate in color, pattern, and finish.
      b. For semiexposed backs of panels with exposed plastic-laminate surfaces, provide surface of high-pressure decorative laminate, NEMA LD 3, Grade VGS.

   2. Drawer Sides and Backs: Thermoset decorative panels with PVC or polyester edge banding.
   3. Drawer Bottoms: Thermoset decorative panels.

B. Concealed Backs of Panels with Exposed Plastic-Laminate Surfaces: High-pressure decorative laminate, NEMA LD 3, Grade BKL.

C. Drawer Construction: Fabricate with exposed fronts fastened to subfront with mounting screws from interior of body.

   1. Join subfronts, backs, and sides with glued rabbeted joints supplemented by mechanical fasteners.

D. Concealed Backs of Panels with Exposed Plastic-Laminate Surfaces: High-pressure decorative laminate, NEMA LD 3, Grade BKL.

E. Drawer Construction: Fabricate with exposed fronts fastened to subfront with mounting screws from interior of body.

1. Join subfronts, backs, and sides with glued rabbeted joints supplemented by mechanical fasteners.

F. Cabinet Body Joinery: Dowel or Dado.

G. Colors, Patterns, and Finishes: Provide materials and products that result in colors and textures of exposed laminate surfaces complying with the following requirements:

1. As indicated on drawings.

2.3 WOOD MATERIALS

A. Wood Products: Provide materials that comply with requirements of referenced quality standard for each type of woodwork and quality grade specified unless otherwise indicated.

1. Wood Moisture Content: 5 to 10 percent.

B. Composite Wood and Agrifiber Products: Provide materials that comply with requirements of referenced quality standard for each type of woodwork and quality grade specified unless otherwise indicated.

1. Medium-Density Fiberboard: ANSI A208.2, Grade 130.
2. Particleboard: ANSI A208.1, Grade M-2.
3. ~~Particleboard: Straw-based particleboard complying with requirements in ANSI A208.1, Grade M-2, except for density.~~

   a. ~~Manufacturers: Subject to compliance with requirements, provide products by one of the following:~~

      1) ~~Environ Biocomposites Manufacturing LLC; Biofiber Wheat.~~
      2) ~~Sorm Incorporated; Primeboard Premium Wheat.~~ Add. #1

4. Softwood Plywood: DOC PS 1, medium-density overlay.
5. Veneer-Faced Panel Products (Hardwood Plywood): HPVA HP-1, made with adhesive containing no urea formaldehyde.
6. Thermoset Decorative Panels: Particleboard or medium-density fiberboard finished with thermally fused, melamine-impregnated decorative paper and complying with requirements of NEMA LD 3, Grade VGL, for test methods 3.3, 3.4, 3.6, 3.8, and 3.10.

2.4 CABINET HARDWARE AND ACCESSORIES

A. General: Provide cabinet hardware and accessory materials associated with architectural cabinets except for items specified in Section 087111 "Door Hardware (Descriptive Specification)."

A. Concealed Hinges (European Type): BHMA A156.9, B01602, 135 degrees of opening, self-closing.

B. Back-Mounted Pulls: BHMA A156.9, B02011.

C. Wire Pulls: Back mounted, solid metal, 4 inches long, 5/16 inch in diameter.

D. Adjustable Shelf Standards and Supports: BHMA A156.9, B04071; with shelf rests, B04081.

E. Shelf Rests: BHMA A156.9, B04013; metal.

F. Drawer Slides: BHMA A156.9.

1. Grade 1HD-100 and Grade 1HD-200: Side mounted; full-extension type; zinc-plated-steel ball-bearing slides.
2. For drawers not more than 3 inches high and not more than 24 inches wide, provide Grade 1HD-100.
3. For drawers more than 3 inches high but not more than 6 inches high and not more than 24 inches wide, provide Grade 1HD-100.
4. For drawers more than 6 inches high or more than 24 inches wide, provide Grade 1HD-200.
5. For trash bins not more than 20 inches high and 16 inches wide, provide Grade 1HD-200.

G. Door Locks: BHMA A156.11, E07121.

H. Drawer Locks: BHMA A156.11, E07041.

I. Door and Drawer Silencers: BHMA A156.16, L03011.

J. Exposed Hardware Finishes: For exposed hardware, provide finish that complies with BHMA A156.18 for BHMA finish number indicated.

1. Satin Stainless Steel: BHMA 630.

K. For concealed hardware, provide manufacturer's standard finish that complies with product class requirements in BHMA A156.9.

2.5 MISCELLANEOUS MATERIALS

A. Furring, Blocking, Shims, and Hanging Strips: Softwood or hardwood lumber, kiln dried to less than 15 percent moisture content.

B. Anchors: Select material, type, size, and finish required for each substrate for secure anchorage. Provide metal expansion sleeves or expansion bolts for post-installed anchors. Use nonferrous-metal or hot-dip galvanized anchors and inserts at inside face of exterior walls and at floors.

C. Adhesive for Bonding Plastic Laminate: Contact cement.

1. Adhesive for Bonding Edges: Hot-melt adhesive or adhesive specified above for faces.

2.6 FABRICATION

A. Fabricate cabinets to dimensions, profiles, and details indicated.

B. Complete fabrication, including assembly and hardware application, to maximum extent possible before shipment to Project site. Disassemble components only as necessary for shipment and installation. Where necessary for fitting at site, provide ample allowance for scribing, trimming, and fitting.

1. Notify Architect seven days in advance of the dates and times woodwork fabrication will be complete.
2. Trial fit assemblies at fabrication shop that cannot be shipped completely assembled. Install dowels, screws, bolted connectors, and other fastening devices that can be removed after trial fitting. Verify that various parts fit as intended and check measurements of assemblies against field measurements before disassembling for shipment.

C. Shop-cut openings to maximum extent possible to receive hardware, appliances, electrical work, and similar items. Locate openings accurately and use templates or roughing-in diagrams to produce accurately sized and shaped openings. Sand edges of cutouts to remove splinters and burrs.

PART 3 - EXECUTION

3.1 PREPARATION

A. Before installation, condition cabinets to average prevailing humidity conditions in installation areas.

B. Before installing cabinets, examine shop-fabricated work for completion and complete work as required.

3.2 INSTALLATION

A. Grade: Install cabinets to comply with same grade as item to be installed.

B. Assemble cabinets and complete fabrication at Project site to the extent that it was not completed in the shop.

C. Install cabinets level, plumb, true, and straight. Shim as required with concealed shims. Install level and plumb to a tolerance of 1/8 inch in 96 inches.

D. Scribe and cut cabinets to fit adjoining work, refinish cut surfaces, and repair damaged finish at cuts.

E. Anchor cabinets to anchors or blocking built in or directly attached to substrates. Secure with countersunk, concealed fasteners and blind nailing. Use fine finishing nails for exposed fastening, countersunk and filled flush with woodwork.

1. Use filler matching finish of items being installed.

F. Cabinets: Install without distortion so doors and drawers fit openings properly and are accurately aligned. Adjust hardware to center doors and drawers in openings and to provide unencumbered operation. Complete installation of hardware and accessory items as indicated.

1. Install cabinets with no more than 1/8 inch in 96-inch sag, bow, or other variation from a straight line.
2. Fasten wall cabinets through back, near top and bottom, and at ends not more than 16 inches o.c. with No. 10 wafer-head sheet metal screws through metal backing or metal framing behind wall finish.

3.3 ADJUSTING AND CLEANING

A. Repair damaged and defective cabinets, where possible, to eliminate functional and visual defects; where not possible to repair, replace woodwork. Adjust joinery for uniform appearance.

B. Clean, lubricate, and adjust hardware.

C. Clean cabinets on exposed and semiexposed surfaces.

END OF SECTION 064116

SECTION 087100 - DOOR HARDWARE

PART 1 - GENERAL

1.1 RELATED DOCUMENTS

A. Drawings and general provisions of the Contract, including General and Supplementary Conditions and Division 01 Specification Sections, apply to this Section.

1.2 SUMMARY

A. This Section includes the following:

1. Commercial door hardware for the following:

   a. Swinging doors.
   b. Fire-rated swinging doors.
   c. Other doors to the extent indicated.

2. Cylinders for doors specified in other Sections.
3. Electrified door hardware.

B. Related Sections include the following:

1. Division 08 Section "Hollow Metal Doors and Frames"
2. Division 08 Section "Aluminum-Framed Entrances and Storefronts"
3. Division 08 Section "Flush Wood Doors"
4. Division 26 Sections for connections to electrical power system and for low-voltage wiring work.
5. Division 28 Section "Access Control" for access control devices installed at door openings and provided as part of a security access system.
6. Division 28 Section "Intrusion Detection" for detection devices installed at door openings and provided as part of an intrusion detection system.

C. Products furnished, but not installed, under this Section include the following. Coordinating, purchasing, delivering, and scheduling remain requirements of this Section.

1. Thresholds, weather stripping, and cylinders for locks specified in other Sections.

1.3 REFERENCED STANDARDS

A. Provide hardware in accordance with the following standards in addition to those specified in Division 01 Section “References”.

1. American National Standards Institute (ANSI), A117.1: Accessible and Usable Buildings and Facilities, edition as adopted by local Authority Having Jurisdiction (AHJ).

2. Builders Hardware Manufacturer's Association (BHMA)

   a. ANSI/BHMA A156.2: Bored and Preassembled Locks and Latches, 2011 edition
   b. ANSI/BHMA A156.3: Exit Devices, 2008 edition
   c. ANSI/BHMA A156.4: Door Controls - Closers, 2008 edition
   d. ANSI/BHMA A156.18: Materials and Finishes, 2006 edition
   e. ANSI/BHMA A156.19: Power Assist and Low Energy Power Operated Doors, 2007 edition

3. Door and Hardware Institute (DHI)

   a. Recommended Locations for Architectural Hardware for Flush Wood Doors, 1993 edition
   b. Recommended Locations for Architectural Hardware for Standard Steel Doors and Frames, 2004 edition
   c. Installation Guide for Doors and Hardware, 1994 edition
   d. Keying Systems and Nomenclature, 2003 edition
   e. Sequence and Format for the Hardware Schedule, 2001 edition

4. National Fire Protection Association (NFPA)

   a. NFPA 70: National Electrical Code, edition as adopted by local AHJ.
   b. NFPA 80: Standard for Fire Doors and Other Opening Protectives, edition as adopted by local AHJ.
   c. NFPA 252: Standard Methods of Fire Tests of Door Assemblies, edition as adopted by local AHJ.

1.4 SUBMITTALS

A. Product Data: Include construction and installation details, material descriptions, dimensions of individual components and profiles, and finishes.

B. Shop Drawings: Details of electrified door hardware, indicating the following:

1. Wiring Diagrams: Power, signal, and control wiring. Include the following:

   a. System schematic.
   b. Point-to-point wiring diagram.
   c. Riser diagram.
   d. Elevation of each door.

2. Detail interface between electrified door hardware and fire alarm, access control, security, building control system.
3. Operation Narrative: Describe the operation of doors controlled by electrified door hardware.

C. Samples for Verification: For exposed door hardware of each type, in specified finish, full size. Tag with full description for coordination with the door hardware sets. Submit Samples before, or concurrent with, submission of the final door hardware sets, if requested.

1. Samples will be returned to Contractor. Units that are acceptable and remain undamaged through submittal, review, and field comparison process may, after final check of operation, be incorporated into the Work, within limitations of keying requirements.

D. Qualification Data: For Installer

E. Product Test Reports: Based on evaluation of comprehensive tests performed by manufacturer and witnessed by a qualified testing agency, for locks, latches, and closers as requested.

F. Maintenance Data: For each type of door hardware to include in maintenance manuals. Include final hardware and keying schedule.

G. Warranty: Special warranty specified in this Section.

H. Door Hardware Sets: Prepared by or under the supervision of Architectural Hardware Consultant, detailing fabrication and assembly of door hardware, as well as procedures and diagrams. Coordinate the final door hardware sets with doors, frames, and related work to ensure proper size, thickness, hand, function, and finish of door hardware.

1. Format: Use same scheduling sequence and format and use same door numbers as in the Contract Documents.
2. Content: Include the following information:

a. Identification number, location, hand, fire rating, and material of each door and frame.
b. Type, style, function, size, quantity, and finish of each door hardware item.
c. Complete designations of every item required for each door or opening including name and manufacturer.
d. Fastenings and other pertinent information.
e. Location of each door hardware set, cross-referenced to Drawings, both on floor plans and in door and frame schedule.
f. Explanation of abbreviations, symbols, and codes contained in schedule.
g. Mounting locations for door hardware.
h. Door and frame sizes and materials.
i. Description of each electrified door hardware function, including location, sequence of operation, and interface with other building control systems.

1) Sequence of Operation: Include description of component functions that occur in the following situations: authorized person wants to enter; authorized person wants to exit; unauthorized person wants to enter; unauthorized person wants to exit.

j. List of related door devices specified in other Sections for each door and frame.

3. Submittal Sequence: Submit the final door hardware sets at earliest possible date, particularly where approval of the door hardware sets must precede fabrication of other work that is critical in Project construction schedule. Include Product Data, Samples, Shop Drawings of other work affected by door hardware, and other information essential to the coordinated review of the door hardware sets.

1.5 QUALITY ASSURANCE

A. Installer Qualifications: An employer of workers trained and approved by lock manufacturer.

1. Installer's responsibilities include supplying and installing door hardware and providing a qualified Architectural Hardware Consultant available during the course of the Work to consult with Contractor, Architect, and Owner about door hardware and keying.
2. Installer shall have warehousing facilities in Project's vicinity.
3. Scheduling Responsibility: Preparation of door hardware and keying schedules.
4. Engineering Responsibility: Preparation of data for electrified door hardware, including Shop Drawings, based on testing and engineering analysis of manufacturer's standard units in assemblies similar to those indicated for this Project.

B. Architectural Hardware Consultant Qualifications: A person who is currently certified by DHI as an Architectural Hardware Consultant and who is experienced in providing consulting services for door hardware installations that are comparable in material, design, and extent to that indicated for this Project.

C. Source Limitations: Obtain each type and variety of door hardware from a single manufacturer, unless otherwise indicated.

1. Provide electrified door hardware from same manufacturer as mechanical door hardware, unless otherwise indicated. Manufacturers that perform electrical modifications and that are listed by a testing and inspecting agency acceptable to authorities having jurisdiction are acceptable.

D. Fire-Rated Door Assemblies: Assemblies complying with NFPA 80 that are listed and labeled by a testing and inspecting agency acceptable to authorities having jurisdiction, for fire ratings indicated, based on testing according to NFPA 252 and UBC Standard 7-2.

1. Test Pressure: After 5 minutes into the test, neutral pressure level in furnace shall be established at 40 inches (1016 mm) or less above the sill.

E. Electrified Door Hardware: Listed and labeled as defined in NFPA 70, Article 100, by a testing agency acceptable to authorities having jurisdiction, and marked for intended use.

F. Keying Conference: Conduct conference at Project site to comply with requirements in Division 01 Section "Project Management and Coordination." In addition to Owner, Construction Manager, Contractor, and Architect, conference participants shall also include Installer's Architectural Hardware Consultant and Owner's Security Consultant. Incorporate keying conference decisions into final keying schedule after reviewing door hardware keying system including, but not limited to, the following:

1. Function of building, flow of traffic, purpose of each area, degree of security required, and plans for future expansion.
2. Preliminary key system schematic diagram.
3. Requirements for key control system.
4. Address for delivery of keys.

G. Pre-installation Conference: Conduct conference at Project site to comply with requirements in Division 01 Section "Project Management and Coordination."

1.6 DELIVERY, STORAGE, AND HANDLING

A. Inventory door hardware on receipt and provide secure lock-up for door hardware delivered to Project site.

B. Tag each item or package separately with identification related to the final door hardware sets, and include basic installation instructions, templates, and necessary fasteners with each item or package.

C. Deliver keys to Owner’s Representative by registered mail or overnight package service.

1.7 COORDINATION

A. Coordinate layout and installation of recessed hardware with floor construction. Cast anchoring inserts into concrete. Concrete, reinforcement, and formwork requirements are specified in Division 03.

B. Templates: Distribute door hardware templates for doors, frames, and other work specified to be factory prepared for installing door hardware. Check Shop Drawings of other work to confirm that adequate provisions are made for locating and installing door hardware to comply with indicated requirements.

C. Coordinate with aluminum entrance door supplier for door hardware installation.

D. Electrical System Roughing-in: Coordinate layout and installation of electrified door hardware with connections to power supplies, fire alarm system and detection devices, access control system, security system, and building control system.

E. Existing Openings: Where new hardware components are scheduled for application to existing construction or where modifications to existing door hardware are required, field verify existing conditions and coordinate installation of door hardware to suit opening conditions and to provide for proper operation.

1.8 WARRANTY

A. Special Warranty: Manufacturer's standard form in which manufacturer agrees to repair or replace components of door hardware that fail in materials or workmanship within specified warranty period.

1. Failures include, but are not limited to, the following:

   a. Structural failures including excessive deflection, cracking, or breakage.
   b. Faulty operation of operators and door hardware.
   c. Deterioration of metals, metal finishes, and other materials beyond normal weathering and use.

2. Warranty Period: Three (3) years from date of Substantial Completion, except as follows:

   a. Continuous Hinges: Lifetime of Building
   b. Grade 1 Cylindrical Locks: Ten (10) years from date of Substantial Completion.
   c. Exit Devices: Three (3) years from date of Substantial Completion.
   d. Manual Closers: Thirty (30) years from date of Substantial Completion.
   e. Automatic Operators: Two (2) years from date of Substantial Completion.
   f. Electrified Hardware Items: One (1) year from date of Substantial Completion.

1.9 MAINTENANCE SERVICE

A. Maintenance Tools and Instructions: Furnish a complete set of specialized tools and maintenance instructions as needed for Owner's continued adjustment, maintenance, and removal and replacement of door hardware.

B. Maintenance Service: Beginning at Substantial Completion, provide six (6) months' full maintenance by skilled employees of door hardware Installer. Include quarterly preventive maintenance, repair or replacement of worn or defective components, lubrication, cleaning, and adjusting as required for proper door hardware operation. Provide parts and supplies same as those used in the manufacture and installation of original products.

PART 2 - PRODUCTS

2.1 MANUFACTURERS

A. Manufacturers: Subject to compliance with requirements, provide products by one of the following:

1.	Hinges:	Ives, Hager, Stanley, McKinney, Bommer
2.	Continuous Hinges:	Ives, Stanley, Hager, Select, McKinney, Pemko
3.	Operating Door Trim:	Ives, Rockwood, Hager, Trimco
4.	Decorative Door Pulls:	Ives, Rockwood, Hager, Burns
5.	Locking Door Pulls:	C.R. Lawrence, Rockwood, Dorma
6.	Electric Strikes:	Von Duprin, HES, Foldger Adams
7.	Locks and Latches:	Schlage, , Match Existing
8.	Cylinders and Cores:	By Owner
9.	Exit Devices:	Von Duprin, Match Existing
10.	Mechanical Door Closers:	LCN, Match Existing

11.	Automatic Operators:	LCN, Match Existing
12.	Accessories and Trim:	Ives, Rockwood, Hager, Trimco
13.	Overhead Stops and Holders:	Glynn Johnson, Rixson, ABH, Sargent
14.	Saddle and Panic Thresholds:	Zero, National Guard, Pemko
15.	Weather Strip and Gasket:	Zero, National Guard, Pemko
16.	Miscellaneous Hardware:	Ives, Rockwood, Hager, Trimco

B. Substitutions submitted in compliance with Division 01 Section “Substitutions” requirements will be reviewed for conformance to basis of design.

2.2 SCHEDULED HARDWARE

A. Requirements for design, grade, function, finish, size, and other distinctive qualities of each type of finish hardware are indicated in the "Hardware Schedule" at the end of this Section. Products are identified by using hardware designation numbers of the following:

1. Manufacturer's Product Designations: The product designation and name of one manufacturer are listed for each hardware type required for the purpose of establishing minimum requirements. Provide either the product designated or, where more than one manufacturer is specified under the Article "Manufacturers" in Part 2 for each hardware type, the comparable product of one of the other manufacturers that complies with requirements.

2.3 MATERIALS AND FABRICATION

A. General

1. Manufacturer's Name Plate: Do not use manufacturers' products that have manufacturer's name or trade name displayed in a visible location (omit removable nameplates) except in conjunction with required fire-rated labels and as otherwise acceptable to Architect.

   a. Manufacturer's identification will be permitted on rim of lock cylinders only.

2. Base Metals: Produce hardware units of basic metal and forming method indicated using manufacturer's standard metal alloy, composition, temper, and hardness, but in no case of lesser (commercially recognized) quality than specified for applicable hardware units for finish designations indicated.
3. Provide hardware manufactured to conform to published templates generally prepared for machine screw installation. Do not provide hardware that has been prepared for self-tapping sheet metal screws, except as specifically indicated.

B. Fasteners

1. Furnish screws for installation with each hardware item. Provide Phillips flat-head screws except as otherwise indicated. Furnish stainless steel (exposed under any condition) screws to match hardware finish or, if exposed in surfaces of other work, to

match finish of this other work as closely as possible including "prepared for paint" surfaces to receive painted finish.

2. Provide concealed fasteners for hardware units that are exposed when door is closed except to the extent no standard units of type specified are available with concealed fasteners. Use through bolts only as indicated in this section unless their use is the only means of reinforcing the work adequately to fasten the hardware securely. Where thru-bolts are used as a means of reinforcing the work, provide sleeves for each thru-bolt or use sex screw fasteners.

2.4 HINGES

A. Acceptable Products:

1. Ives: 5BB1
2. Hager: BB1279
3. Stanley: FBB179
4. McKinney: TB2714
5. Bommer: BB5000

B. Requirements:

1. Quantity: Provide the following, unless otherwise indicated:

   a. Two Hinges: For doors with heights up to 60 inches.
   b. Three Hinges: For doors with heights 61 to 90 inches.

2. Template Requirements: Except for hinges and pivots to be installed entirely (both leaves) into wood doors and frames, provide only template-produced units.
3. Hinge Weight: As indicated in hardware sets.
4. Hinge Base Metal: Unless otherwise indicated, provide the following:

   a. Exterior Hinges: Stainless steel with stainless-steel pin.
   b. Interior Hinges: Steel with steel pin.
   c. Hinges for Fire-Rated Assemblies: Steel with steel pin.

5. Hinge Options: Where indicated in door hardware sets or on Drawings:

   a. Safety Stud: Designed for stud in one leaf to engage hole in opposing leaf.
   b. Non-removable Pins: Provide set screw in hinge barrel that, when tightened into a groove in hinge pin, prevents removal of pin while door is closed; for out-swinging doors.
   c. Corners: Square.

6. Fasteners: Comply with the following:

   a. Machine Screws: For metal doors and frames. Install into drilled and tapped holes.
   b. Wood Screws: For wood doors and frames.
   c. Threaded-to-the-Head Wood Screws: For fire-rated wood doors.

2.5 CONTINUOUS HINGES

A. Acceptable Products:

1.	Ives:	112HD	224HD
2.	Stanley:	661HD	662HD
3.	Hager:	780-112HD	780-224HD
4.	Select:	SL11HD	SL24HD
5.	McKinney:	MCK-12HD	MCK-25HD

B. Requirements:

1. Geared Continuous Hinges: Shall utilize a single gear section for the door leaf and a separate gear section for the frame side of the door. Provide full mortise or surface applied hinge as scheduled in each set. Geared hinges are to be UL 10C tested and approved for 90 minutes.

2.6 OPERATING DOOR TRIM

A. Door Bolts

1. Acceptable Products:

a.	Ives:	FB358/FB458
b.	Rockwood:	557/555
c.	Hager:	283D/282D
d.	Trimco:	3915/3917

2. Requirements:

a. Provide bolt model recommended by manufacturer for door material type.
b. Provide 1 inch throw stainless steel bolt with 12 inch length unless otherwise scheduled in the sets.
c. Provide a dust proof strike for bottom bolt at all locations where there is not a threshold.

B. Push Plates, Pull Plates, and Pulls

1. Acceptable Products:

a.	Ives:	8200	8305
b.	Rockwood:	70C	111x70C
c.	Hager:	30S	31J
d.	Trimco:	1001	1018

2. Requirements:

a. Push Plate: Provide 6 inch by 16 inch by .050 inch push plate constructed of stainless steel. Bevel all four edges.

b. Pull Plate: Provide 4 inch by 16 inch by .050 inch push plate constructed of stainless steel, bevel all four edges. Provide 10 inch center to center (CTC) pull constructed of stainless steel with a diameter of 1 inch.

C. Decorative Door Pulls

1. Acceptable Products:

a. Ives: 9264F
b. Rockwood: RM3311
c. Burns: VP4251

2. Requirements:

a. Provide door pulls 1-1/4 inch diameter with flat tips. Pull shall be constructed of brass, bronze, or stainless steel.
b. Provide pull length and shape as indicated in the sets.

2.7 ELECTRIC STRIKES

A. Acceptable Products:

1. Von Duprin: 6000 Series
2. HES: 1006 Series
3. Foldger Adam: 300 Series

B. Requirements:

1. Provide electric strikes that are continuous duty rated without the use of external rectifiers.
2. Provide electric strikes with function (fail safe, fail secure) and power requirements as scheduled.
3. Where scheduled, provide electric strikes with monitor switches.

2.8 LOCKS AND LATCHES

A. General:

1. Lock Chassis: Shall be made from steel, with locking spindles of stainless steel.
2. Latch Bolt: Shall be constructed of stainless steel with 3/4 inch throw on mortise locks and 1/2 inch throw otherwise. Latch to be deadlocking on keyed functions.
3. Lever Trim: Shall be pressure cast brass, bronze, zinc, or steel with wrought rose design. Levers are to be solid with no voids or plastic inserts.
4. Fire Rating: Lock shall be listed for up to 3 hours.
5. Strike Plates: Provide ANSI 4-7/8 inch strike plates. At pairs of doors, provide strike with 7/8 inch flat lip. At single doors, provide round-lipped strike with lip length as required to minimally clear jamb and trim. Provide dust box at each strike location.

B. Grade 1 Bored Locks

1. Acceptable Products:

a. Base Bid:

1) Corbin Russwin: CL3300 Series, NZD Lever

b. Alternate Bid:

1) Schlage: ND Series, Rhodes Lever
2) Sargent: 10 Line, LL Lever

2. Requirements:

a. ANSI Grade: BHMA/ANSI A156.2, Series 4000, Grade 1.
b. Door Prep: Provide lockset to install using a standard ANSI 161 door preparation.
c. Anti-Rotation Plate: Provide lockset with a mechanically interlocked anti-rotation plate. Anti-Rotation teeth or "bite tabs" are not acceptable. Locks without any rotation prevention devices are not acceptable.
d. Lever Return Springs: Provide each lever with two compression type return springs that are easily accessible without dismantling the lock chassis. Locks utilizing tension or torsion lever return springs are unacceptable. Locks with internal springs that require dismantling the lock chassis are unacceptable.
e. Lever Spindles: Provide lock with either milled or 1-piece deep drawn spindles. 2-piece interlocking stamped spindles are not acceptable.
f. Multi-Functionality: Provide modular lockset with capability to convert to a new lock function by changing key cams.
g. Vandal Resistant Lever: Where scheduled, provide lockset with lever that freely rotates even when locked to resist vandalism and abuse.

2.9 CYLINDERS AND CORES

A. Provided by Owner

B. Requirements:

1. Temporary Construction Keying: Provide each cylinder with "Split Key" type temporary keying during the construction period. At substantial completion, accompany the owner's representative while voiding construction keying.

2.10 EXIT DEVICES

A. Acceptable Products:

1. Von Duprin: 98 Series
2. Match Existing

B. Requirements:

1. ANSI Grade: BHMA/ANSI A156.3, Grade 1.
2. Device Construction:

   a. Exit device(s) shall have a mechanism case constructed of extruded aluminum or wrought stainless steel, base plates constructed of cold rolled or cast steel, push pad of extruded aluminum with stainless steel covering or wrought stainless steel, and end caps with flush mounted, sloped design. At full-glass doors, provide exit devices with no exposed fasteners or rivets visible through glass. Where required by stile width, provide narrow-stile type device.
   b. Latchbolt: Provide Pullman-type deadlocking latch bolts constructed of stainless steel. Where specified provide high security Pullman-type latchbolt that collapses to be square faced under high pull forces. Latch return springs shall be compression type. Tension and Torsion latch return springs are not acceptable.
   c. Dogging Mechanism: where dogging or latch-retraction options are not specifically scheduled for non-fire rated doors, provide device with a hex-key activated hook-type dogging mechanism constructed of steel.
   d. Plastic or nylon used for the push pad, or parts in the dogging mechanism or latchbolt mechanism are unacceptable.
   e. Sound Dampening: Device shall be provided with factory-installed sound dampening materials.
   f. Provide device type, function, and trim style as indicated in hardware schedules.

3. Where exit device(s) are provided for fire rated door, provide with fire listing and label indicating “Fire Exit Hardware”. If device is mounted on wood doors, provide sex nuts and bolts.
4. Provide shim kits, filler plates, and other accessories as required for each opening.
5. Unless otherwise indicated in the sets, provide device with roller-type strike.
6. Where scheduled, provide removable mullions by same manufacturer as provided exit devices. Provide mullion stabilizers, key removable option, strike preps, and fire rating as indicated in sets.
7. Concealed vertical exit devices shall be a cable-actuated concealed vertical latch system available in two-point and less bottom latch (LBL) configurations. Vertical rods are not acceptable.

   a. Cable shall include color-coded stainless steel with polytetrafluoroethylene (Teflon®) liner and stainless steel core wire. Latches and center slides are color coded to aid in installation. Conduit and core wire ends snap into latch and center slides without the use of tools. Latchbolts and blocking cams shall be manufactured from sintered metal low carbon copper- infiltrated steel, with a molybdenum disulfide coating for low friction and consistent performance.
   b. Top latchbolt shall have a minimum 0.382 inch and greater than 90 degree engagement with strike to prevent door and frame separation under high static load. Bottom latchbolt, when used, shall have a minimum of 0.44 inch engagement with strike.
   c. Product cycle life shall exceed 1,000,000 cycles.
   d. Latch release does not require separate trigger mechanism.

e. Top and bottom latch must operate independently of each other. Top latch will fully engage top strike even when bottom latch is compromised.
f. Cable and latching system shall have the ability to:

1) Be assembled as a complete assembly and function prior to being installed in the door.
2) Install into the door as a one-piece single assembly
3) Be installed independently of device installation and function on door even prior to device and trim installation.
4) Connect to the exit device at a single attachment point.
5) Adjust bottom latch height from a single point, after the system is installed and connected to exit device, while the door is hanging
6) Alter latch position up and down within two-inches without additional adjustment.
7) Ability to remove the system while door is hanging.
8) Configure latchbolt mounting: double or single tab mount for steel doors, and wood doors, face mount for aluminum doors, eliminating requirement of tabs.
9) Provide adjustable exit device to latch center line adjustment. Ensures double tab mounting option for top latch, regardless of exit device centerline.

2.11 MECHANICAL DOOR CLOSERS

A. General:

1. Valves: Closers shall have separate valves for latch speed, main speed, and back check. Valves shall be staked to prevent accidental removal.
2. Provide the appropriate closer body, handing, and brackets to mount closer inside the building on the least-public side of the door.

a. Where closers are to be mounted parallel arm, provide with heavy duty, fully forged arms.
b. Where closers are to be mounted regular arm and the opening can otherwise be opened to 180 degrees, provide closer with the appropriate special templating to allow 180 degree door swing. Where a special template is not available for 180 degree swing, provide closer arm with integrated stop.

3. Integrated Stop Closer Arms: Where a closer with integrated stop is required, provide the appropriate closer and arm as follows:

a. Parallel arm with spring-cushioned stop arm: Provide where door is otherwise able to open to 95 degrees and requires a parallel arm mount closer.
b. Parallel arm with dead stop arm: Provide where door is obstructed from opening to 95 degrees and requires a parallel arm mount closer.
c. Regular arm with push side surface-mounted overhead stop: Provide where door closer should mount on pull side of door.

4. Hold Open Arms: Provide closer arms with mechanical hold-opens as scheduled.
5. Provide closers with any special templates, brackets, plates, or other accessories required for interface with header, door, wall, and other hardware. Provide closers with screw packs containing thru-bolts, machine screws, and wood screws.
6. Closers shall be provided with all-weather fluid and shall not require readjustment from 120 degrees F to -30 degrees F. Fluid shall be non-flaming and shall not fuel door or floor covering fires. Upon request, provide data indicating thermal properties of fluid.
7. Closers shall close and latch door when adjusted to meet accessibility requirements for door opening force: 8.5 lbs at exterior doors, 5 lbs at interior doors, and 15 lbs at labeled fire doors.

B. Heavy Duty Door Closers:

1. LCN: 4040XP
2. Match Existing
3. Requirements:

   a. ANSI Grade: BHMA/ANSI A156.4, Grade 1.
   b. Closer Construction: Closer shall have cast iron body with 1-1/2 inch steel piston, double heat treated pinion, 5/8 inch bearing journals, and full complement needle or caged ball bearings. Closer shall be adjustable from sizes 1 through 6.
   c. Provide closers with spring size adjustment dial for ease of adjusting.

2.12 AUTOMATIC OPERATORS (ELECTRO-HYDRAULIC)

A. Acceptable Products:

1. LCN: 4600 Series
2. Match Existing

B. Requirements:

1. Provide low energy automatic operator units with hydraulic closer complying with ANSI A156.19.
2. Provide units with conventional door closer opening and closing forces unless power operator motor is activated. Provide door closer assembly with adjustable spring size, back-check, and opening and closing speed adjustment valves to control door.

   a. Hydraulic Fluid: Fireproof, passing requirements of UL10C, and requiring no seasonal closer adjustment for temperatures ranging from 120 degrees F to -30 degrees F.

3. Provide units with on/off switch for manual operation, motor start up delay, vestibule interface delay, electric lock delay, and door hold open delay.
4. Provide drop plates, brackets, or adapters for arms as required for details.
5. Provide actuator switches for operation as specified. Provide weather-resistant actuators at exterior applications.

6. Provide complete assemblies of controls, switches, power supplies, relays, and parts/material recommended and approved by manufacturer of automatic operator for each individual leaf.
7. Provide units with vestibule inputs that allow sequencing operation of two units, and SPDT relay for interfacing with latching or locking devices.
8. Provide bollards specifically made to accommodate actuator hardware at exterior and within-vestibule locations as shown on plans.

2.13 ARCHITECTURAL DOOR TRIM

A. Protection Plates and Edge Guards

1. Acceptable Products:

a.	Ives:	8400 Series
b.	Rockwood:	K1050
c.	Hager:	194S
d.	Trimco:	K Series

2. Requirements:

a. Provide .050 inch thick stainless steel protection plates with height as scheduled. Plate shall have four beveled edges and countersunk screws. Provide plate with width as follows:

1) Pairs of Doors: Provide plate to be 1 inch less door width.
2) Single Doors: Provide plate to be 2 inches less door width on push side, pull side mounted plates to be 1 inch less door width.

B. Door Stops and Holders

1. Acceptable Products:

a.	Ives:	WS407
b.	Rockwood:	405/406
c.	Hager:	236W
d.	Trimco:	1270

2. Requirements:

a. Provide stops and holders as indicated in the HW sets.
b. Where wall bumpers are scheduled, provide concave rubber bumper where the adjacent lever trim incorporates a push-button. Otherwise, provide convex rubber bumpers.

2.14 OVERHEAD STOPS AND HOLDERS

A. Acceptable Products:

1.	Glynn Johnson:	100 Series
2.	Rixson-Firemark:	6 Series
3.	ABH:	1000 Series
4.	Sargent:	100 Series

B. Requirements:

1. Provide overhead stops and holders as scheduled, sized per manufacturer's recommendations based on door width.
2. Provide concealed overhead stops with adjustable jamb bracket.
3. Where possible without conflicting with other hardware, mount surface overhead stops on least public side of door.
4. Provide stops with any special templates, brackets, plates, or other accessories required for interface with header, door, wall, and other hardware.

2.15 WEATHERSTRIP AND GASKET

A. General:

1. Provide weather strip and gasketing as scheduled.
2. Size weather strip and gasket to provide a continuous seal around opening and at meeting stiles.

B. Perimeter Seals

1. Acceptable Products:

a.	Zero:	8303AA	488S-BK
b.	National Guard:	160S	2525B
c.	Pemko:	303AS	PK33D

2.16 MISCELLANEOUS HARDWARE

A. Silencers

1. Acceptable Products:

a.	Ives:	SR64
b.	Rockwood:	608
c.	Hager:	307D
d.	Trimco:	1229A

2. Requirements:

a. Where indicated on single openings, provide 3 each rubber silencers on lock jamb.
b. Where indicated on paired openings, provide 2 each rubber silencers on header.

2.17 ELECTRONIC ACCESSORIES

A. Power Supplies

1. Acceptable Products:

a. Von Duprin: PS900 Series
b. Match Existing

2. Requirements:

a. Provide power supplies, recommended and approved by the manufacturer of the electrified locking component, for the operation of electrified locks, electrified exit devices, magnetic locks, electric strikes, and other components requiring a power supply.
b. Provide the appropriate quantity of power supplies necessary for the proper operation of the electrified locking component and/or components as recommended by the manufacturer of the electrified locking components with consideration for each electrified component utilizing the power supply, the location of the power supply, and the approved wiring diagrams. Locate the power supplies as directed by the Architect.
c. Provide a power supply that is regulated and filtered 24 VDC, or as required, and UL class 2 listed.
d. Options: Provide the following options.

1) Provide a power supply, where specified, with the internal capability of charging optional sealed backup batteries 24 VDC, or as required, in addition to operating the DC load.
2) Provide sealed batteries for battery back-up at each power supply where scheduled.
3) Provide keyed power supply cabinet.
4) Provide a power supply complete requiring only 120VAC to the fused input and shall be supplied in an enclosure.

e. Provide a power supply with emergency release terminals, where required, that allow the release of all devices upon activation of the fire alarm system complete with fire alarm input for initiating “no delay” exiting mode.

B. Electric Power Transfers

1. Acceptable Products:

a. Von Duprin: EPT-10
b. Match Existing EPT-10

2. Requirements:

a. Provide edge-mounted electric power transfer with either two 18 gauge wires or ten 24 gauge wires as scheduled.

b. Provide transfer capable of carrying a 16 Amp current for a minimum of .3 seconds.

C. Door Contacts

1. Acceptable Products:

a.	Schlage Electronics:	679-05	7764
b.	Securitron:	DPS Series	--
c.	Security Door Controls:	MC-4	MC-4M

2. Requirements:

a. Provide concealed, edge-mounted door contacts as appropriate for door/frame material.
b. Provide 7764 door contacts where scheduled on fire rated openings, otherwise provide 679-05 switches.

2.18 HIGH SECURITY EMERGENCY KEY BOX

A. Acceptable Products:

1. Knox, Inc. 3200 Series x RMK
2. Substitutions as approved by Architect/Owner

B. Requirements:

1. Provide recess-mounted emergency key box as approved by the local fire jurisdiction. Key box to be master-keyed as dictated by local fire jurisdiction.

2.19 FINISHES

A. Match items to the manufacturer's standard color and texture finish for the latch and locksets (or push-pull units if no latch or locksets).

B. Provide quality of finish, including thickness of plating or coating (if any), composition, hardness, and other qualities complying with manufacturer's standards, but in no case less than specified by referenced standards for the applicable units of hardware.

C. The designations used in schedules and elsewhere to indicate hardware finishes are those listed in ANSI/BHMA A156.18, "Materials and Finishes," including coordination with the traditional U.S. finishes shown by certain manufacturers for their products.

D. The designations used in schedules and elsewhere to indicate hardware finishes are the industry-recognized standard commercial finishes, except as otherwise noted.

1. Brushed Chrome and/or Stainless Steel Appearance

a. Brushed Stainless Steel, no coating: ANSI 630.
b. Satin Chrome, Clear Coated: ANSI 626, ANSI 652.
c. Powder Coated Aluminum finish: ANSI 689.
d. Saddle and Panic Thresholds: Mill Aluminum finish.
e. Weatherstrip and Gasket: Clear Anodized Aluminum finish.

PART 3 - EXECUTION

3.1 EXAMINATION

A. Examine doors and frames, with Installer present, for compliance with requirements for installation tolerances, labeled fire door assembly construction, wall and floor construction, and other conditions affecting performance.

B. Examine roughing-in for electrical power systems to verify actual locations of wiring connections before electrified door hardware installation.

C. Proceed with installation only after unsatisfactory conditions have been corrected.

3.2 PREPARATION

A. Steel Doors and Frames: Comply with DHI A115 Series.

1. Surface-Applied Door Hardware: Drill and tap doors and frames according to ANSI A250.6.

B. Wood Doors: Comply with DHI A115-W Series.

3.3 INSTALLATION

A. Pre-installation conference shall be conducted prior to installation of hardware at Project site. Meet with the, Owner, Contractor, installer, and manufacturer's representatives. A separate pre-installation conference shall be conducted prior to the installation of electronic security hardware with the electrical contractor Review catalogs, brochures, templates, installation instructions, and the approved hardware schedule. Survey installation procedures and workmanship, with special emphasis on unusual conditions, as to ensure correct technique of installation, and coordination with other work. Notify participants at least ten, 10 working days before conference.

B. Hardware Installers must have a minimum of five (5) years' experience in installation of hardware. Provide verification of installer's qualification to Consultant for approval. All installers to attend review meetings with the hardware distributor.

C. Install hardware using only manufacturer supplied and approved fasteners in strict adherence with manufacturers published installation instructions.

D. Install head seal prior to installation of “PA”-parallel arm mounted door closers and push side mounted door stops/holders. Trim, cut and notch thresholds and saddles neatly to minimally fit the profile of the door frame. Install thresholds and saddles in a bed of caulking completely sealing the underside from water and air penetration.

E. Counter sink through bolt of door pull under push plate during installation.

F. Mounting Heights: Mount door hardware units at heights indicated, as follows, unless otherwise indicated or required to comply with governing regulations.

1. Standard Steel Doors and Frames: DHI's "Recommended Locations for Architectural Hardware for Standard Steel Doors and Frames."
2. Custom Steel Doors and Frames: DHI's "Recommended Locations for Builders' Hardware for Custom Steel Doors and Frames."
3. Wood Doors: DHI WDHS.3, "Recommended Locations for Architectural Hardware for Wood Flush Doors."

G. Install each door hardware item to comply with manufacturer's written instructions. Where cutting and fitting are required to install door hardware onto or into surfaces that are later to be painted or finished in another way, coordinate removal, storage, and reinstallation of surface protective trim units with finishing work specified in Division 09 Sections. Do not install surface-mounted items until finishes have been completed on substrates involved.

1. Set units level, plumb, and true to line and location. Adjust and reinforce attachment substrates as necessary for proper installation and operation.
2. Drill and countersink units that are not factory prepared for anchorage fasteners. Space fasteners and anchors according to industry standards.

H. Boxed Power Supplies: Locate power supplies as indicated. Verify location with Architect.

1. Configuration: Provide one power supply for each door opening.
2. Configuration: Provide the least number of power supplies required to adequately serve doors with electrified door hardware.

3.4 FIELD QUALITY CONTROL

A. Architectural Hardware Consultant: Architect shall engage a qualified Architectural Hardware Consultant to perform inspections and to prepare inspection reports.

B. Architectural Hardware Consultant shall inspect door hardware and state in each report whether installed work complies with or deviates from requirements, including whether door hardware is properly installed and adjusted.

3.5 ADJUSTING

A. Initial Adjustment: Adjust and check each operating item of door hardware and each door to ensure proper operation or function of every unit. Replace units that cannot be adjusted to

operate as intended. Adjust door control devices to compensate for final operation of heating and ventilating equipment and to comply with referenced accessibility requirements.

1. Electric Strikes: Adjust horizontal and vertical alignment of keeper to properly engage lock bolt.
2. Door Closers: Unless otherwise required by authorities having jurisdiction, adjust sweep period so that, from an open position of 70 degrees, the door will take at least 3 seconds to move to a point 3 inches (75 mm) from the latch, measured to the leading edge of the door.

B. Occupancy Adjustment: Approximately six months after date of Substantial Completion, Installer's Architectural Hardware Consultant shall examine and readjust, including adjusting operating forces, each item of door hardware as necessary to ensure function of doors, door hardware, and electrified door hardware.

3.6 CLEANING AND PROTECTION

A. Clean adjacent surfaces soiled by door hardware installation.

B. Clean operating items as necessary to restore proper function and finish.

C. Provide final protection and maintain conditions that ensure that door hardware is without damage or deterioration at time of Substantial Completion.

3.7 DEMONSTRATION

A. Engage a factory-authorized service representative to train Owner's maintenance personnel to adjust, operate, and maintain door hardware and door hardware finishes. Refer to Division 01 Section "Demonstration and Training."

3.8 DOOR HARDWARE SETS

A. The following schedule of hardware sets shall be considered a guide and the supplier is cautioned to refer to general conditions, special conditions, and the full requirements of this section. It shall be the hardware supplier's responsibility to furnish all required hardware.

B. Where items of hardware are not definitely or correctly specified and are required for completion of the Work, a written statement of such omission, error, conflict, or other discrepancy shall be sent to the Architect, prior to date specified for receipt of bids, for clarification by addendum.

C. Adjustments to the Contract Sum will not be allowed for omissions or items of hardware not clarified prior to bid opening.

HW SET NO: 01

1	SET	SEALS	160S	AL	NGP
	EA	RE-USE EXISTING	HARDWARE		EXI

PATCH, REPAIR, REFINISH FRAME TO LIKE NEW CONDITION. REPLACE ANY DAMAGED HARDWARE.

HW SET NO: 02

1	EA	END CAP KIT	050014	626	VON
1	SET	SEALS	160S	AL	NGP
	EA	RE-USE EXISTING	HARDWARE		EXI

PATCH, REPAIR, REFINISH FRAME TO LIKE NEW CONDITION. REPLACE ANY DAMAGED HARDWARE.

HW SET NO: 03

3	EA	HINGE	5BB1 4.5 X 4.5 NRP		652	IVE
1	EA	STOREROOM LOCKSET	CL3357 NZD		626	C-R
1	EA	PERMANENT CORE	PROVIDED BY OWNER INSTALLED BY CONTRACTOR		626	B/O
1	EA	ELECTRIC STRIKE	6400 FSE	✓	630	VON
1	EA	SURFACE CLOSER	4040XP		689	LCN
1	EA	KICK PLATE	8400 10" X 2" LDW		630	IVE
1	EA	WALL STOP	WS406/407CCV		630	IVE
3	EA	SILENCER	SR64		GRY	IVE
1	EA	CREDENTIAL READER	BY DIV 28	✓		B/O
1	EA	DOOR CONTACT	679-05		WHT	SCE
1	EA	PIR REQUEST TO EXIT	SCANII		BLK	SCE
		POWER SUPPLY	BY DIV 28	✓		B/O

CARD IN. USER PRESENTS CREDENTIAL, ELECTRIC STRIKE KEEPER RELEASES, USER OPENS DOOR TO ENTER.
DOOR POSITION IS MONITORED THROUGH ACCESS CONTROL SYSTEM. MOTION DETECTOR IS REQUEST TO EXIT.

HW SET NO: 04

6	EA	HINGE	5BB1 4.5 X 4.5 NRP	652	IVE
1	EA	MANUAL FLUSH BOLT	FB458 (TOP)	626	IVE
1	EA	CLASSROOM LOCKSET	CL3355 NZD	626	C-R
1	EA	PERMANENT CORE	PROVIDED BY OWNER INSTALLED BY CONTRACTOR	626	B/O

1	EA	SURFACE CLOSER	4040XP HEDA (ACTIVE LEAF ONLY)	689	LCN
1	EA	KICK PLATE	8400 10" X 2" LDW	630	IVE
2	EA	WALL STOP	WS406/407CCV	630	IVE
3	EA	SILENCER	SR64	GRY	IVE

HW SET NO: 05

6	EA	HINGE	5BB1 4.5 X 4.5 NRP	652	IVE
1	EA	MANUAL FLUSH BOLT	FB458 (TOP)	626	IVE
1	EA	CLASSROOM LOCKSET	CL3355 NZD	626	C-R
1	EA	PERMANENT CORE	PROVIDED BY OWNER INSTALLED BY CONTRACTOR	626	B/O
1	EA	SURFACE CLOSER	4040XP H (ACTIVE LEAF ONLY)	689	LCN
1	EA	KICK PLATE	8400 10" X 2" LDW	630	IVE
2	EA	WALL STOP	WS406/407CCV	630	IVE
3	EA	SILENCER	SR64	GRY	IVE

HW SET NO: 06

1	EA	CONT. HINGE	224HD	628	IVE
1	EA	CLASSROOM LOCKSET	CL3355 NZD	626	C-R
1	EA	PERMANENT CORE	PROVIDED BY OWNER INSTALLED BY CONTRACTOR	626	B/O
1	EA	SURFACE CLOSER	4040XP HEDA	689	LCN
1	EA	KICK PLATE	8400 10" X 2" LDW	630	IVE
1	EA	WALL STOP	WS406/407CCV	630	IVE
3	EA	SILENCER	SR64	GRY	IVE

HW SET NO: 07

3	EA	HINGE	5BB1 4.5 X 4.5 NRP	652	IVE
1	EA	CLASSROOM LOCKSET	CL3355 NZD	626	C-R
1	EA	PERMANENT CORE	PROVIDED BY OWNER INSTALLED BY CONTRACTOR	626	B/O
1	EA	SURFACE CLOSER	4040XP H	689	LCN
1	EA	KICK PLATE	8400 10" X 2" LDW	630	IVE
1	EA	WALL STOP	WS406/407CCV	630	IVE
3	EA	SILENCER	SR64	GRY	IVE

HW SET NO: 08

3	EA	HINGE	5BB1 4.5 X 4.5 NRP	652	IVE
1	EA	CLASSROOM LOCKSET	CL3355 NZD	626	C-R
1	EA	PERMANENT CORE	PROVIDED BY OWNER INSTALLED BY CONTRACTOR	626	B/O
1	EA	WALL STOP	WS406/407CCV	630	IVE
3	EA	SILENCER	SR64	GRY	IVE

HW SET NO: 09

3	EA	HINGE	5BB1 4.5 X 4.5 NRP	652	IVE
1	EA	CLASSROOM LOCKSET	CL3355 NZD	626	C-R
1	EA	PERMANENT CORE	PROVIDED BY OWNER INSTALLED BY CONTRACTOR	626	B/O
1	EA	KICK PLATE	8400 10" X 2" LDW	630	IVE
1	EA	WALL STOP	WS406/407CCV	630	IVE
3	EA	SILENCER	SR64	GRY	IVE

HW SET NO: 10

3	EA	HINGE	5BB1 4.5 X 4.5 NRP	652	IVE
1	EA	OFF/ENT LOCKSET	CL3361 NZD	626	C-R
1	EA	PERMANENT CORE	PROVIDED BY OWNER INSTALLED BY CONTRACTOR	626	B/O
1	EA	KICK PLATE	8400 10" X 2" LDW	630	IVE
1	EA	WALL STOP	WS406/407CCV	630	IVE
3	EA	SILENCER	SR64	GRY	IVE

HW SET NO: 11

3	EA	HINGE	5BB1 4.5 X 4.5 NRP	652	IVE
1	EA	STOREROOM LOCKSET	CL3357 NZD	626	C-R
1	EA	PERMANENT CORE	PROVIDED BY OWNER INSTALLED BY CONTRACTOR	626	B/O
1	EA	KICK PLATE	8400 10" X 2" LDW	630	IVE
1	EA	WALL STOP	WS406/407CCV	630	IVE
3	EA	SILENCER	SR64	GRY	IVE

HW SET NO: 12

3	EA	HINGE	5BB1 4.5 X 4.5 NRP	652	IVE
1	EA	STOREROOM LOCKSET	CL3357 NZD	626	C-R

1	EA	PERMANENT CORE	PROVIDED BY OWNER INSTALLED BY CONTRACTOR	626	B/O
1	EA	SURFACE CLOSER	4040XP	689	LCN
1	EA	KICK PLATE	8400 10" X 2" LDW	630	IVE
1	EA	WALL STOP	WS406/407CCV	630	IVE
3	EA	SILENCER	SR64	GRY	IVE

HW SET NO: 13

3	EA	HINGE	5BB1 4.5 X 4.5 NRP	652	IVE
1	EA	PRIVACY LATCHSET	CL3340 NZD	626	C-R
1	EA	SURFACE CLOSER	4040XP	689	LCN
1	EA	KICK PLATE	8400 10" X 2" LDW	630	IVE
1	EA	WALL STOP	WS406/407CCV	630	IVE
1	SET	SEALS	2525B	BRN	NGP

HW SET NO: 14

3	EA	HINGE	5BB1 4.5 X 4.5 NRP	652	IVE
1	EA	PUSH PLATE	8200 6" X 16"	630	IVE
1	EA	PULL PLATE	8305 8" 4" X 16"	630	IVE
1	EA	SURFACE CLOSER	4040XP H	689	LCN
1	EA	KICK PLATE	8400 10" X 2" LDW	630	IVE
1	EA	WALL STOP	WS406/407CCV	630	IVE
3	EA	SILENCER	SR64	GRY	IVE

HW SET NO: 15

1	EA	DOOR CORD	798C-12	626	SCE
1	EA	END CAP KIT	050014	626	VON
1	EA	DOOR CONTACT	679-05 (IF REQ'D)	WHT	SCE
1	EA	RX SWITCH KIT	050251		VON
	EA	RE-USE EXISTING	HARDWARE		EXI

PATCH, REPAIR, REFINISH FRAME TO LIKE NEW CONDITION. REPLACE ANY DAMAGED HARDWARE.

HW SET NO: 16

3	EA	HINGE	5BB1 4.5 X 4.5 NRP		652	IVE
1	EA	PANIC HARDWARE	98-L-06		626	VON
1	EA	RIM CYLINDER	BY OWNER		626	B/O
1	EA	SURFACE CLOSER	4040XP SHCUSH		689	LCN
1	EA	CUSH SHOE SUPPORT	4040-30		689	LCN
3	EA	SILENCER	SR64		GRY	IVE

HW SET NO: 17

3	EA	HINGE	5BB1 4.5 X 4.5 NRP		652	IVE
1	EA	POWER TRANSFER	EPT10	✓	689	VON
1	EA	EL STOREROOM LOCK	ND80PDEL RHO N123-062	✓	626	SCH
1	EA	ELECTRIC STRIKE	6211 FSE DS	✓	630	VON
1	EA	SURF. AUTO OPERATOR	4631	✓	689	LCN
2	EA	ACTUATOR, WALL MOUNT	8310-853	✓	630	LCN
1	EA	KICK PLATE	8400 10" X 2" LDW B4E		630	IVE
1	EA	WALL STOP	WS407CCV		630	IVE
1	EA	COAT AND HAT HOOK	582		626	IVE
3	EA	SILENCER	SR64		GRY	IVE
1	EA	PUSHBUTTON	621GID AA DP	✓	629	SCE
1	EA	SIGN	"DEPRESS TO LOCK DOOR"			TBD
1	EA	POWER SUPPLY	PS902 900-BBK 900-8P	✓	LGR	SCE
1	EA	POINT TO POINT	DIAGRAM			SCE
2	EA	RELAYS	AS REQ'D BY DIV 26	✓		B/O

DOOR IS NORMALLY UNLOCKED. USER PUSHES ACTUATOR RELEASING ELECTRIC STRIKE, ADA OPERATOR OPENS DOOR OR DEPRESSES LEVER AND PUSHES DOOR OPEN. TO LOCK DOOR USER PRESSES PUSH BUTTON TO POWER OUTSIDE LEVER TO LOCK AND DEACTIVATE OUTSIDE ACTUATOR. ROTATING INSIDE LEVER OR PUSHING INSIDE ACTUATOR RELEASES ELECTRIC STRIKE AND PUSH BUTTON AND UNLOCKS DOOR FROM EXTERIOR AND ACTIVATES EXTERIOR ACTUATOR. Add.#1

HW SET NO: A

2	EA	CONT. HINGE	112HD EPT		628	IVE
2	EA	POWER TRANSFER	EPT10	✓	689	VON
1	EA	ELEC PANIC HARDWARE	LX-RX-QEL+-9849-NL-OP-110MD	✓	626	VON
1	EA	ELEC PANIC HARDWARE	RX-QEL+-9849-EO	✓	626	VON
1	EA	RIM CYLINDER	PROVIDED BY OWNER INSTALLED BY CONTRACTOR		626	B/O
2	EA	LONG DOOR PULL	9264F 36" 20" STD		630	IVE
1	EA	DOOR PULL	VR810 DT		630	IVE
1	EA	DOOR PULL	VR810 NL		630	IVE
2	EA	OH STOP	100S ADJ		630	GLY
1	EA	SURFACE CLOSER	4040XP EDA		689	LCN

1	EA	SURF. AUTO OPERATOR	4642 CS FC	✓	689	LCN
1	EA	PA MOUNTING PLATE	4040-18PA		689	LCN
1	EA	BLADE STOP SPACER	4040-61		689	LCN
1	EA	ACTUATOR, WALL MOUNT	8310-853 (EXTERIOR ON BOLLARD)	✓	630	LCN
1	EA	BOLLARD POST	8310-866 (EXTERIOR)	✓	AL	LCN
1	EA	PERIMETER SEALS	DOOR MFG STD		AL	B/O
1	EA	THRESHOLD	DOOR MFG STD		AL	B/O
1	EA	CREDENTIAL READER	BY DIV 28	✓		B/O
2	EA	DOOR CONTACT	7764	✓	628	SCE
1	EA	POWER SUPPLY	PS902 900-2RS-FA	✓	LGR	VON

AUTO LOCK/UNLOCK THROUGH ACCESS CONTROL SYSTEM. CARD ENTRANCE AFTER HOURS. USER PRESENTS CREDENTIAL, EXIT DEVICE LATCH RETRACTS, USER EITHER OPENS DOOR TO ENTER OR PUSHES ACTUATOR TO ACTIVATE OPERATOR FOR ENTRANCE. EXTERIOR ACTUATOR IS TURNED OFF/ON THROUGH ACCESS CONTROL SYSTEM TIME AND CALENDAR FEATURE. DOOR POSITION IS MONITORED THROUGH ACCESS CONTROL SYSTEM. REQUEST TO EXIT IS IN EXIT DEVICE PUSH BAR. OPERATOR FUNCTIONS INDEPENDENT FROM INTERIOR OPERATOR.

HW SET NO: B

2	EA	CONT. HINGE	112HD		628	IVE
1	EA	DUMMY PUSH BAR	350		626	VON
2	EA	LONG DOOR PULL	9264F 36" 20" STD		630	IVE
2	EA	OH STOP	100S ADJ		630	GLY
1	EA	SURFACE CLOSER	4040XP EDA		689	LCN
1	EA	SURF. AUTO OPERATOR	4642 CS FC	✓	689	LCN
1	EA	PA MOUNTING PLATE	4040-18PA		689	LCN
1	EA	BLADE STOP SPACER	4040-61		689	LCN
1	EA	ACTUATOR, JAMB MOUNT	8310-818 (MULLION MOUNT)	✓	630	LCN
1	EA	ACTUATOR, WALL MOUNT	8310-855 (INSTALL ON VESTIBULE BOLLARD)	✓	630	LCN
1	EA	BOLLARD POST	8310-866 (VESTIBULE)	✓	AL	LCN
1	EA	PERIMETER SEALS	DOOR MFG STD		AL	B/O
1	EA	THRESHOLD	DOOR MFG STD		AL	B/O

OPERATOR FUNCTIONS INDEPENDENT FROM EXTERIOR OPERATOR.

END OF SECTION 087100

SECTION 088000 - GLAZING

PART 1 - GENERAL

1.1 RELATED DOCUMENTS

A. Drawings and general provisions of the Contract, including General and Supplementary Conditions and Division 01 Specification Sections, apply to this Section.

1.2 SUMMARY

A. Section includes:

1. Glass for windows doors interior borrowed lites.
2. Glazing sealants and accessories.
3. Architectural window films. Add.#1

B. Related Requirements:

1. Section 084213 "Aluminum-Framed Entrances" for glass in storefront door entrances.
2. Section 088300 "Mirrors."

1.3 DEFINITIONS

A. Glass Manufacturers: Firms that produce primary glass, fabricated glass, or both, as defined in referenced glazing publications.

B. Glass Thicknesses: Indicated by thickness designations in millimeters according to ASTM C 1036.

C. IBC: International Building Code.

D. Interspace: Space between lites of an insulating-glass unit.

1.4 COORDINATION

A. Coordinate glazing channel dimensions to provide necessary bite on glass, minimum edge and face clearances, and adequate sealant thicknesses, with reasonable tolerances.

1.5 ACTION SUBMITTALS

A. Product Data: For each type of product.

B. Glass Samples: For each type of the following products; 12 inches square.

1. Insulating glass.

C. Glazing Schedule: List glass types and thicknesses for each size opening and location. Use same designations indicated on Drawings.

D. Delegated-Design Submittal: For glass indicated to comply with performance requirements and design criteria, including analysis data signed and sealed by the qualified professional engineer responsible for their preparation.

1.6 QUALITY ASSURANCE

A. Manufacturer Qualifications for Insulating-Glass Units with Sputter-Coated, Low-E Coatings: A qualified insulating-glass manufacturer who is approved by coated-glass manufacturer.

1.7 DELIVERY, STORAGE, AND HANDLING

A. Protect glazing materials according to manufacturer's written instructions. Prevent damage to glass and glazing materials from condensation, temperature changes, direct exposure to sun, or other causes.

B. Comply with insulating-glass manufacturer's written instructions for venting and sealing units to avoid hermetic seal ruptures due to altitude change.

1.8 FIELD CONDITIONS

A. Environmental Limitations: Do not proceed with glazing when ambient and substrate temperature conditions are outside limits permitted by glazing material manufacturers and when glazing channel substrates are wet from rain, frost, condensation, or other causes.

1. Do not install glazing sealants when ambient and substrate temperature conditions are outside limits permitted by sealant manufacturer or are below 40 deg F.

1.9 WARRANTY

A. Manufacturer's Special Warranty for Insulating Glass: Manufacturer agrees to replace insulating-glass units that deteriorate within specified warranty period. Deterioration of insulating glass is defined as failure of hermetic seal under normal use that is not attributed to glass breakage or to maintaining and cleaning insulating glass contrary to manufacturer's written instructions. Evidence of failure is the obstruction of vision by dust, moisture, or film on interior surfaces of glass.

1. Warranty Period: 10 years from date of Substantial Completion.

PART 2 - PRODUCTS

2.1 MANUFACTURERS

A. Source Limitations for Glass: Obtain from single source from single manufacturer for each glass type.

B. Source Limitations for Glazing Accessories: Obtain from single source from single manufacturer for each product and installation method.

2.2 PERFORMANCE REQUIREMENTS

A. General: Installed glazing systems shall withstand normal thermal movement and wind and impact loads (where applicable) without failure, including loss or glass breakage attributable to the following: defective manufacture, fabrication, or installation; failure of sealants or gaskets to remain watertight and airtight; deterioration of glazing materials; or other defects in construction.

B. Delegated Design: Engage a qualified professional engineer, as defined in Section 014000 "Quality Requirements," to design glazing.

C. Structural Performance: Glazing shall withstand the following design loads within limits and under conditions indicated determined according to the IBC and ASTM E 1300.

1. Design Wind Pressures: As indicated on Drawings.
2. Maximum Lateral Deflection: For glass supported on all four edges, limit center-of-glass deflection at design wind pressure to not more than 1/50 times the short-side length or 1 inch, whichever is less.
3. Differential Shading: Design glass to resist thermal stresses induced by differential shading within individual glass lites.

D. Safety Glazing: Where safety glazing is indicated, provide glazing that complies with 16 CFR 1201, Category II.

E. Thermal and Optical Performance Properties: Provide glass with performance properties specified, as indicated in manufacturer's published test data, based on procedures indicated below:

1. For monolithic-glass lites, properties are based on units with lites 6 mm thick.
2. For insulating-glass units, properties are based on units of thickness indicated for overall unit and for each lite.
3. U-Factors: Center-of-glazing values, according to NFRC 100 and based on LBL's WINDOW 5.2 computer program, expressed as Btu/sq. ft. x h x deg F.
4. Solar Heat-Gain Coefficient and Visible Transmittance: Center-of-glazing values, according to NFRC 200 and based on LBL's WINDOW 5.2 computer program.
5. Visible Reflectance: Center-of-glazing values, according to NFRC 300.

2.3 GLASS PRODUCTS, GENERAL

A. Glazing Publications: Comply with published recommendations of glass product manufacturers and organizations below unless more stringent requirements are indicated. See these publications for glazing terms not otherwise defined in this Section or in referenced standards.

1. IGMA Publication for Insulating Glass: SIGMA TM-3000, "North American Glazing Guidelines for Sealed Insulating Glass Units for Commercial and Residential Use."

B. Safety Glazing Labeling: Permanently mark glazing with certification label of manufacturer. Label shall indicate manufacturer's name, type of glass, thickness, and safety glazing standard with which glass complies.

C. Thickness: Where glass thickness is indicated, it is a minimum. Provide glass that complies with performance requirements and is not less than the thickness indicated.

1. Minimum Glass Thickness for Lites: 6 mm.

D. Strength: Provide fully tempered float glass.

2.4 GLASS PRODUCTS

A. Fully Tempered Float Glass: ASTM C 1048, Kind FT (fully tempered), Condition A (uncoated) unless otherwise indicated, Type I, Class 1 (clear) , Quality-Q3.

B. Heat-Strengthened Float Glass: ASTM C 1048, Kind HS (heat strengthened), Type I, Condition A (uncoated) unless otherwise indicated, Type I, Class 1 (clear) or Class 2 (tinted) as indicated, Quality-Q3.

1. Fabrication Process: By horizontal (roller-hearth) process with roll-wave distortion parallel to bottom edge of glass as installed unless otherwise indicated.

2.5 INSULATING GLASS

A. Insulating-Glass Units: Factory-assembled units consisting of sealed lites of glass separated by a dehydrated interspace, qualified according to ASTM E 2190.

1. Sealing System: Dual seal, with manufacturer's standard primary and secondary sealants.
2. Spacer: Manufacturer's standard spacer material and construction.
3. Desiccant: Molecular sieve or silica gel, or a blend of both.

2.6 GLAZING TAPES

A. Back-Bedding Mastic Glazing Tapes: Preformed, butyl-based, 100 percent solids elastomeric tape; nonstaining and nonmigrating in contact with nonporous surfaces; with or without spacer

rod as recommended in writing by tape and glass manufacturers for application indicated; and complying with ASTM C 1281 and AAMA 800 for products indicated below:

1. AAMA 804.3 tape, as required.

2.7 MISCELLANEOUS GLAZING MATERIALS

A. General: Provide products of material, size, and shape complying with referenced glazing standard, with requirements of manufacturers of glass and other glazing materials for application indicated, and with a proven record of compatibility with surfaces contacted in installation.

B. Cleaners, Primers, and Sealers: Types recommended by sealant or gasket manufacturer.

C. Setting Blocks: Elastomeric material with a Shore, Type A durometer hardness of 85, plus or minus 5.

D. Spacers: Elastomeric blocks or continuous extrusions of hardness required by glass manufacturer to maintain glass lites in place for installation indicated.

E. Edge Blocks: Elastomeric material of hardness needed to limit glass lateral movement (side walking).

F. Cylindrical Glazing Sealant Backing: ASTM C 1330, Type O (open-cell material), of size and density to control glazing sealant depth and otherwise produce optimum glazing sealant performance.

2.8 GLAZING FILM

A. Architectural Window Film: Subject to compliance with requirements, provide 3M Fasara Glace or approved equal. Add.#1

2.9 FABRICATION OF GLAZING UNITS

A. Fabricate glazing units in sizes required to fit openings indicated for Project, with edge and face clearances, edge and surface conditions, and bite complying with written instructions of product manufacturer and referenced glazing publications, to comply with system performance requirements.

1. Allow for thermal movements from ambient and surface temperature changes acting on glass framing members and glazing components.

a. Temperature Change: 120 deg F, ambient; 180 deg F, material surfaces.

B. Grind smooth and polish exposed glass edges and corners.

PART 3 - EXECUTION

3.1 EXAMINATION

A. Examine framing, glazing channels, and stops, with Installer present, for compliance with the following:

1. Manufacturing and installation tolerances, including those for size, squareness, and offsets at corners.
2. Presence and functioning of weep systems.
3. Minimum required face and edge clearances.
4. Effective sealing between joints of glass-framing members.

B. Proceed with installation only after unsatisfactory conditions have been corrected.

3.2 PREPARATION

A. Clean glazing channels and other framing members receiving glass immediately before glazing. Remove coatings not firmly bonded to substrates.

B. Examine glazing units to locate exterior and interior surfaces. Label or mark units as needed so that exterior and interior surfaces are readily identifiable. Do not use materials that leave visible marks in the completed Work.

3.3 GLAZING, GENERAL

A. Comply with combined written instructions of manufacturers of glass, sealants, gaskets, and other glazing materials, unless more stringent requirements are indicated, including those in referenced glazing publications.

B. Protect glass edges from damage during handling and installation. Remove damaged glass from Project site and legally dispose of off Project site. Damaged glass includes glass with edge damage or other imperfections that, when installed, could weaken glass, impair performance, or impair appearance.

C. Apply primers to joint surfaces where required for adhesion of sealants, as determined by preconstruction testing.

D. Install setting blocks in sill rabbets, sized and located to comply with referenced glazing publications, unless otherwise required by glass manufacturer. Set blocks in thin course of compatible sealant suitable for heel bead.

E. Do not exceed edge pressures stipulated by glass manufacturers for installing glass lites.

F. Provide spacers for glass lites where length plus width is larger than 50 inches.

1. Locate spacers directly opposite each other on both inside and outside faces of glass. Install correct size and spacing to preserve required face clearances, unless gaskets and glazing tapes are used that have demonstrated ability to maintain required face clearances and to comply with system performance requirements.
2. Provide 1/8-inch minimum bite of spacers on glass and use thickness equal to sealant width. With glazing tape, use thickness slightly less than final compressed thickness of tape.

G. Provide edge blocking where indicated or needed to prevent glass lites from moving sideways in glazing channel, as recommended in writing by glass manufacturer and according to requirements in referenced glazing publications.

H. Set glass lites in each series with uniform pattern, draw, bow, and similar characteristics.

I. Set glass lites with proper orientation so that coatings face exterior or interior as specified.

J. Where wedge-shaped gaskets are driven into one side of channel to pressurize sealant or gasket on opposite side, provide adequate anchorage so gasket cannot walk out when installation is subjected to movement.

K. Square cut wedge-shaped gaskets at corners and install gaskets in a manner recommended by gasket manufacturer to prevent corners from pulling away; seal corner joints and butt joints with sealant recommended by gasket manufacturer.

3.4 TAPE GLAZING

A. Position tapes on fixed stops so that, when compressed by glass, their exposed edges are flush with or protrude slightly above sightline of stops.

B. Install tapes continuously, but not necessarily in one continuous length. Do not stretch tapes to make them fit opening.

C. Cover vertical framing joints by applying tapes to heads and sills first, then to jambs. Cover horizontal framing joints by applying tapes to jambs, then to heads and sills.

D. Place joints in tapes at corners of opening with adjoining lengths butted together, not lapped. Seal joints in tapes with compatible sealant approved by tape manufacturer.

E. Do not remove release paper from tape until right before each glazing unit is installed.

3.5 GASKET GLAZING (DRY)

A. Cut compression gaskets to lengths recommended by gasket manufacturer to fit openings exactly, with allowance for stretch during installation.

B. Insert soft compression gasket between glass and frame or fixed stop so it is securely in place with joints miter cut and bonded together at corners.

C. Install gaskets so they protrude past face of glazing stops.

3.6 CLEANING AND PROTECTION

A. Immediately after installation remove nonpermanent labels and clean surfaces.

B. Protect glass from contact with contaminating substances resulting from construction operations. Examine glass surfaces adjacent to or below exterior concrete and other masonry surfaces at frequent intervals during construction, but not less than once a month, for buildup of dirt, scum, alkaline deposits, or stains.

1. If, despite such protection, contaminating substances do come into contact with glass, remove substances immediately as recommended in writing by glass manufacturer. Remove and replace glass that cannot be cleaned without damage to coatings.

C. Remove and replace glass that is damaged during construction period.

D. Wash glass on both exposed surfaces not more than four days before date scheduled for inspections that establish date of Substantial Completion. Wash glass as recommended in writing by glass manufacturer.

3.7 MONOLITHIC GLASS SCHEDULE

A. Glass Type D: Clear fully tempered float glass.

1. Minimum Thickness: 6 mm.
2. Safety glazing required.

3.8 INSULATING GLASS SCHEDULE

A. Glass Type B: Low-E-coated, clear insulating glass.

1. Basis-of-Design Product: Viracon VNE1-63.
2. Overall Unit Thickness: 1 inch.
3. Minimum Thickness of Each Glass Lite: 6 mm.
4. Outdoor Lite: Heat-strengthened or Fully tempered float glass.
5. Interspace Content: Air.
6. Indoor Lite: Heat-strengthened or Fully tempered float glass.
7. Low-E Coating: Pyrolytic or sputtered on second surface.
8. Winter Nighttime U-Factor: .29 maximum.
9. Summer Daytime U-Factor: .26 maximum.
10. Visible Light Transmittance: 62 percent minimum.

11. Solar Heat Gain Coefficient: .29 maximum.
12. Safety glazing required.

END OF SECTION 088000

SECTION 104413 - FIRE PROTECTION CABINETS

PART 1 - GENERAL

1.1 RELATED DOCUMENTS

A. Drawings and general provisions of the Contract, including General and Supplementary Conditions and Division 01 Specification Sections, apply to this Section.

1.2 SUMMARY

A. Section Includes:

1. Fire-protection cabinets for the following:

a. Portable fire extinguishers.

B. Related Requirements:

1. Section 104416 "Fire Extinguishers."

1.3 ACTION SUBMITTALS

A. Product Data: For each type of product. Show door hardware, cabinet type, trim style, and panel style. Include roughing-in dimensions and details showing recessed-, semirecessed-, or surface-mounting method and relationships of box and trim to surrounding construction.

B. Samples for Verification: For each type of exposed finish required, prepared on Samples 6 by 6 inches (150 by 150 mm) square.

1.4 CLOSEOUT SUBMITTALS

A. Maintenance Data: For fire-protection cabinets to include in maintenance manuals.

1.5 COORDINATION

A. Coordinate size of fire-protection cabinets to ensure that type and capacity of fire extinguishers indicated are accommodated.

B. Coordinate sizes and locations of fire-protection cabinets with wall depths.

PART 2 - PRODUCTS

2.1 PERFORMANCE REQUIREMENTS

A. Fire-Rated Fire-Protection Cabinets: Listed and labeled to comply with requirements in ASTM E 814 for fire-resistance rating of walls where they are installed.

B. Electrical Components, Devices, and Accessories: Listed and labeled as defined in NFPA 70, by a qualified testing agency, and marked for intended location and application.

2.2 FIRE-PROTECTION CABINET: FEC

A. Cabinet Type: Suitable for fire extinguisher.

1. Manufacturers: Subject to compliance with requirements, provide products by one of the following:

a. Fire-End & Croker Corporation.
b. JL Industries, Inc.; a division of the Activar Construction Products Group.
c. Larsens Manufacturing Company.
d. Modern Metal Products, Division of Technico Inc.
e. Potter Roemer LLC.

B. Cabinet Construction: Nonrated.

C. Cabinet Material: Aluminum sheet.

1. Shelf: Same metal and finish as cabinet.

D. Semirecessed Cabinet: One-piece combination trim and perimeter door frame overlapping surrounding wall surface with exposed trim face and wall return at outer edge (backbend).

1. Rolled-Edge Trim: 2-1/2-inch (64-mm) backbend depth.

E. Cabinet Trim Material: Aluminum sheet.

F. Door Material: Aluminum sheet.

G. Door Style: Vertical duo panel with frame.

H. Door Glazing: Clear float glass.

I. Door Hardware: Manufacturer's standard door-operating hardware of proper type for cabinet type, trim style, and door material and style indicated.

1. Provide projecting lever handle with cam-action latch or projecting door pull and friction latch.

2. Provide continuous hinge, of same material and finish as trim or concealed hinge permitting door to open 180 degrees.

J. Accessories:

1. Mounting Bracket: Manufacturer's standard steel, designed to secure fire extinguisher to fire-protection cabinet, of sizes required for types and capacities of fire extinguishers indicated, with plated or baked-enamel finish.
2. Identification: Lettering complying with authorities having jurisdiction for letter style, size, spacing, and location.

   a. Identify fire extinguisher in fire-protection cabinet with the words "FIRE EXTINGUISHER."

      1) Location: Applied to cabinet glazing.
      2) Application Process: Pressure-sensitive vinyl letters.
      3) Lettering Color: Red.
      4) Orientation: Vertical.

K. Materials:

1. Aluminum: ASTM B 221 (ASTM B 221M), with strength and durability characteristics of not less than Alloy 6063-T5 for aluminum sheet. ASTM B 221 (ASTM B 221M) for extruded shapes.

   a. Finish: Clear anodic.

2. Clear Float Glass: ASTM C 1036, Type I, Class 1, Quality q3, 3 mm thick.

2.3 FABRICATION

A. Fire-Protection Cabinets: Provide manufacturer's standard box (tub) with trim, frame, door, and hardware to suit cabinet type, trim style, and door style indicated.

1. Weld joints and grind smooth.
2. Provide factory-drilled mounting holes.
3. Install door locks at factory.

B. Cabinet Doors: Fabricate doors according to manufacturer's standards, from materials indicated and coordinated with cabinet types and trim styles.
1. Fabricate door frames of one-piece construction with edges flanged.
2. Miter and weld perimeter door frames.

C. Cabinet Trim: Fabricate cabinet trim in one piece with corners mitered, welded, and ground smooth.

2.4 GENERAL FINISH REQUIREMENTS

A. Comply with NAAMM's AMP 500, "Metal Finishes Manual for Architectural and Metal Products," for recommendations for applying and designating finishes.

B. Protect mechanical finishes on exposed surfaces of fire-protection cabinets from damage by applying a strippable, temporary protective covering before shipping.

C. Finish fire-protection cabinets after assembly.

D. Appearance of Finished Work: Noticeable variations in same piece are not acceptable. Variations in appearance of adjoining components are acceptable if they are within the range of approved Samples and are assembled or installed to minimize contrast.

PART 3 - EXECUTION

3.1 EXAMINATION

A. Examine walls and partitions for suitable framing depth and blocking where semirecessed cabinets will be installed.

B. Proceed with installation only after unsatisfactory conditions have been corrected.

3.2 PREPARATION

A. Prepare recesses for semirecessed fire-protection cabinets as required by type and size of cabinet and trim style.

3.3 INSTALLATION

A. General: Install fire-protection cabinets in locations and at mounting heights indicated or, if not indicated, at heights acceptable to authorities having jurisdiction.

B. Fire-Protection Cabinets: Fasten cabinets to structure, square and plumb.

C. Identification: Apply vinyl lettering at locations indicated.

3.4 ADJUSTING AND CLEANING

A. Remove temporary protective coverings and strippable films, if any, as fire-protection cabinets are installed unless otherwise indicated in manufacturer's written installation instructions.

B. Adjust fire-protection cabinet doors to operate easily without binding. Verify that integral locking devices operate properly.

C. On completion of fire-protection cabinet installation, clean interior and exterior surfaces as recommended by manufacturer.

D. Touch up marred finishes, or replace fire-protection cabinets that cannot be restored to factory-finished appearance. Use only materials and procedures recommended or furnished by fire-protection cabinet and mounting bracket manufacturers.

E. Replace fire-protection cabinets that have been damaged or have deteriorated beyond successful repair by finish touchup or similar minor repair procedures.

END OF SECTION 104413

SECTION 104416 - FIRE EXTINGUISHERS

PART 1 - GENERAL

1.1 RELATED DOCUMENTS

A. Drawings and general provisions of the Contract, including General and Supplementary Conditions and Division 01 Specification Sections, apply to this Section.

1.2 SUMMARY

A. Section includes portable, hand-carried fire extinguishers.

B. Related Sections:

1. Section 104413 "Fire Extinguisher Cabinets."

1.3 ACTION SUBMITTALS

A. Product Data: For each type of product indicated. Include rating and classification, material descriptions, dimensions of individual components and profiles, and finishes for fire extinguisher.

B. Product Schedule: For fire extinguishers. Coordinate final fire extinguisher schedule with fire protection cabinet schedule to ensure proper fit and function. Use same designations indicated on Drawings.

1.4 INFORMATIONAL SUBMITTALS

A. Warranty: Sample of special warranty.

1.5 CLOSEOUT SUBMITTALS

A. Operation and Maintenance Data: For fire extinguishers to include in maintenance manuals.

1.6 QUALITY ASSURANCE

A. NFPA Compliance: Fabricate and label fire extinguishers to comply with NFPA 10, "Portable Fire Extinguishers."

B. Fire Extinguishers: Listed and labeled for type, rating, and classification by an independent testing agency acceptable to authorities having jurisdiction.

1. Provide fire extinguishers approved, listed, and labeled by FMG.

1.7 COORDINATION

A. Coordinate type and capacity of fire extinguishers with fire protection cabinets to ensure fit and function.

1.8 WARRANTY

A. Special Warranty: Manufacturer's standard form in which manufacturer agrees to repair or replace fire extinguishers that fail in materials or workmanship within specified warranty period.

1. Failures include, but are not limited to, the following:

a. Failure of hydrostatic test according to NFPA 10.
b. Faulty operation of valves or release levers.

2. Warranty Period: Six years from date of Substantial Completion.

PART 2 - PRODUCTS

2.1 PORTABLE, HAND-CARRIED FIRE EXTINGUISHERS

A. Fire Extinguishers: Type, size, and capacity for each fire protection cabinet indicated.

1. Valves: Manufacturer's standard.
2. Handles and Levers: Manufacturer's standard.
3. Instruction Labels: Include pictorial marking system complying with NFPA 10, Appendix B and bar coding for documenting fire extinguisher location, inspections, maintenance, and recharging.

B. Multipurpose Dry-Chemical Type: UL-rated 3-A:40-BC, ~~5~~10 lb. nominal capacity, with monoammonium phosphate-based dry chemical in manufacturer's standard enameled container.

Add.#1

PART 3 - EXECUTION

3.1 EXAMINATION

A. Examine fire extinguishers for proper charging and tagging.

1. Remove and replace damaged, defective, or undercharged fire extinguishers.

B. Proceed with installation only after unsatisfactory conditions have been corrected.

3.2 INSTALLATION

A. General: Install fire extinguishers and mounting brackets in locations indicated and in compliance with requirements of authorities having jurisdiction.

B. Mounting Brackets: Fasten mounting brackets to surfaces, square and plumb, at locations indicated.

END OF SECTION 104416

SECTION 122413 - ROLLER WINDOW SHADES

PART 1 - GENERAL

1.1 RELATED DOCUMENTS

A. Drawings and general provisions of the Contract, including General and Supplementary Conditions and Division 01 Specification Sections, apply to this Section.

1.2 SUMMARY

A. Section Includes:

1. Manually operated roller shades with single rollers.

B. Related Requirements:

1. Section 061053 "Miscellaneous Rough Carpentry" for wood blocking and grounds for mounting roller shades and accessories.

1.3 ALLOWANCES

A. Roller shades are part of Window-Covering Allowance.

1.4 ACTION SUBMITTALS

A. Product Data:

1. Include styles, material descriptions, construction details, dimensions of individual components and profiles, features, finishes, and operating instructions for roller shades.

B. Shop Drawings: Show fabrication and installation details for roller shades, including shadeband materials, their orientation to rollers, and their seam and batten locations.

C. Samples for Verification:

1. Shadeband Material: Not less than 10 inches square. Mark inside face of material if applicable.
2. Installation Accessories: Full-size unit, not less than 10 inches long.

D. Roller-Shade Schedule: Use same designations indicated on Drawings.

1.5 INFORMATIONAL SUBMITTALS

A. Qualification Data: For Installer.

B. Product Certificates: For each type of shadeband material, signed by product manufacturer.

C. Product Test Reports: For each type of shadeband material, for tests performed by manufacturer and witnessed by a qualified testing agency.

1.6 CLOSEOUT SUBMITTALS

A. Maintenance Data: For roller shades to include in maintenance manuals.

1.7 MAINTENANCE MATERIAL SUBMITTALS

A. Furnish extra materials that match products installed and that are packaged with protective covering for storage and identified with labels describing contents.

1. Roller Shades: Full-size units equal to 5 percent of quantity installed for each size, color, and shadeband material indicated, but no fewer than two units.

1.8 QUALITY ASSURANCE

A. Installer Qualifications: Fabricator of products.

1.9 DELIVERY, STORAGE, AND HANDLING

A. Deliver roller shades in factory packages, marked with manufacturer, product name, and location of installation.

1.10 FIELD CONDITIONS

A. Environmental Limitations: Do not install roller shades until construction and finish work in spaces, including painting, is complete and dry and ambient temperature and humidity conditions are maintained at the levels indicated for Project when occupied for its intended use.

B. Field Measurements: Where roller shades are indicated to fit to other construction, verify dimensions of other construction by field measurements before fabrication and indicate measurements on Shop Drawings. Allow clearances for operating hardware of operable glazed units through entire operating range. Notify Architect of installation conditions that vary from Drawings. Coordinate fabrication schedule with construction progress to avoid delaying the Work.

PART 2 - PRODUCTS

2.1 MANUFACTURERS

A. Manufacturers: Subject to compliance with requirements, provide products by one of the following:

1. Draper Inc.
2. MechoSystems
3. Springs Window Fashions Add.#1
4. VIMCO.

B. Source Limitations: Obtain roller shades from single source from single manufacturer.

2.2 MANUALLY OPERATED SHADES WITH SINGLE ROLLERS

A. Chain-and-Clutch Operating Mechanisms: With continuous-loop bead chain and clutch that stops shade movement when bead chain is released; permanently adjusted and lubricated.

1. Bead Chains: Stainless steel.

a. Loop Length: Full length of roller shade.
b. Limit Stops: Provide upper and lower ball stops.
c. Chain-Retainer Type: Chain tensioner, sill mounted.

2. Spring Lift-Assist Mechanisms: Manufacturer's standard for balancing roller-shade weight and lifting heavy roller shades.

a. Provide for shadebands that weigh more than 10 lb or for shades as recommended by manufacturer, whichever criteria are more stringent.

B. Rollers: Corrosion-resistant steel or extruded-aluminum tubes of diameters and wall thicknesses required to accommodate operating mechanisms and weights and widths of shadebands indicated without deflection. Provide with permanently lubricated drive-end assemblies and idle-end assemblies designed to facilitate removal of shadebands for service.

1. Roller Drive-End Location: Right side of inside face of shade.
2. Direction of Shadeband Roll: Regular, from back of roller.
3. Shadeband-to-Roller Attachment: Manufacturer's standard method.

C. Mounting Hardware: Brackets or endcaps, corrosion resistant and compatible with roller assembly, operating mechanism, installation accessories, and mounting location and conditions indicated.

D. Roller-Coupling Assemblies: Coordinated with operating mechanism and designed to join up to three inline rollers into a multiband shade that is operated by one roller drive-end assembly.

E. Shadebands:

1. Shadeband Material: Light-filtering fabric.
2. Shadeband Bottom (Hem) Bar: Steel or extruded aluminum.

   a. Type: Enclosed in sealed pocket of shadeband material.
   b. Color and Finish: As indicated on Drawings.

F. Installation Accessories:

1. Front Fascia: Aluminum extrusion that conceals front and underside of roller and operating mechanism and attaches to roller endcaps without exposed fasteners.

   a. Shape: L-shaped.
   b. Height: Manufacturer's standard height required to conceal roller and shadeband when shade is fully open, but not less than 4 inches.

2. Endcap Covers: To cover exposed endcaps.
3. Installation Accessories Color and Finish: As selected from manufacturer's full range.

2.3 SHADEBAND MATERIALS

A. Shadeband Material Flame-Resistance Rating: Comply with NFPA 701. Testing by a qualified testing agency. Identify products with appropriate markings of applicable testing agency.

B. Light-Filtering Fabric: Woven fabric, stain and fade resistant.

1. Source: Draper
2. Type: PVC coated polyester.
3. Weave: Basketweave
4. Thickness: 0.036 inches.
5. Weight: 19.2 oz.yd2.
6. Roll Width: 60 inches.
7. Orientation on Shadeband: Up the bolt.
8. Openness Factor: 5 percent
9. Color: As selected by Architect from Manufacturer’s full range.

2.4 ROLLER-SHADE FABRICATION

A. Product Safety Standard: Fabricate roller shades to comply with WCMA A 100.1, including requirements for flexible, chain-loop devices; lead content of components; and warning labels.

B. Unit Sizes: Fabricate units in sizes to fill window and other openings as follows, measured at 74 deg F:

1. Between (Inside) Jamb Installation: Width equal to jamb-to-jamb dimension of opening in which shade is installed less 1/4 inch per side or 1/2-inch total, plus or minus 1/8 inch. Length equal to head-to-sill or -floor dimension of opening in which shade is installed less 1/4 inch, plus or minus 1/8 inch.

2. Field verify all locations where shades are to be installed and confirm the ability to inside jamb mount all shades. Notify architect immediately if this installation method is not possible at all locations.

C. Shadeband Fabrication: Fabricate shadebands without battens or seams to extent possible except as follows:

1. Vertical Shades: Where width-to-length ratio of shadeband is equal to or greater than 1:4, provide battens and seams at uniform spacings along shadeband length to ensure shadeband tracking and alignment through its full range of movement without distortion of the material.

PART 3 - EXECUTION

3.1 EXAMINATION

A. Examine substrates, areas, and conditions, with Installer present, for compliance with requirements for installation tolerances, operational clearances, and other conditions affecting performance of the Work.

B. Proceed with installation only after unsatisfactory conditions have been corrected.

3.2 ROLLER-SHADE INSTALLATION

A. Install roller shades level, plumb, and aligned with adjacent units according to manufacturer's written instructions.

3.3 ADJUSTING

A. Adjust and balance roller shades to operate smoothly, easily, safely, and free from binding or malfunction throughout entire operational range.

3.4 CLEANING AND PROTECTION

A. Clean roller-shade surfaces after installation, according to manufacturer's written instructions.

B. Provide final protection and maintain conditions, in a manner acceptable to manufacturer and Installer, that ensure that roller shades are without damage or deterioration at time of Substantial Completion.

C. Replace damaged roller shades that cannot be repaired, in a manner approved by Architect, before time of Substantial Completion.

END OF SECTION 122413

DIVISION 22/23 TABLE OF CONTENTS

SECTION NUMBER	TITLE
221410	Plumbing Piping
221411	Disinfecting Water Supply System
221430	Plumbing Specialties
224440	Plumbing Fixtures
224450	Plumbing Equipment
224460	Special Plumbing Equipment Systems
230500	Basic Mechanical Requirements
230529	Basic Mechanical Materials and Methods
230540	Mechanical Sound and Vibration Control
230548	Mechanical Seismic Control
230593	Testing, Adjusting and Balancing
230700	Mechanical Insulation
230900	Electronic Controls
230910	Laboratory Airflow Control
231123	Natural Gas Systems
232120	Process Piping
233300	Ductwork and Accessories
233400	Air Handling Fans
233410	Special Exhaust Systems
233600	Air Terminal Units
233713	Air Inlets and Outlets
235700	Heat Transfer
236400	Refrigeration
238146	Heat Pumps

SECTION 230700 - MECHANICAL INSULATION

PART 1 - GENERAL

1.1 RELATED WORK

A. Requirements: Provide insulation in accordance with the Contract Documents.

B. Related work specified in other Sections:

Section 230500 - Basic Mechanical Requirements
Section 230529 - Basic Mechanical Materials and Methods
Section 230540 - Mechanical Sound and Vibration Control
Section 224450 - Plumbing Equipment
Section 236400 - Refrigeration
Section 233100 - Air Distribution

1.2 SYSTEM DESCRIPTION

A. The mechanical insulation work required by this Section shall include materials and methods as described herein and on the Drawings and as required by applicable energy codes.

B. The work includes, but is not limited to providing insulation on the following:

1. Plumbing Systems:

   Domestic Hot Water-Supply, Recirculating, Hot Water Converters, and Storage Tanks
   Tempered Domestic Water-Supply, Recirculating and Storage Tanks
   Tempered Domestic Water Circulating
   Domestic Cold Water
   Chilled Drinking Water Piping, Recirculating and Storage Tanks

2. Refrigerant Systems:

   Refrigerant Piping
   Cold Condensate Drains

3. Air Distribution Systems:

Exterior surfaces of all plenums and ducts which are a part of the following systems where duct or plenum is not lined (see Section 230540):
Outside Air
Combustion Air
Mixed Air
Medium Pressure Supply Air
Low Pressure Supply Air
Return Air
Rigid Round Runouts to Diffusers except any exposed in open ceilings.

4. Other Systems:

Cold Condensate Drains

1.3 QUALITY ASSURANCE

A. Qualifications: The firm executing the work of this Section shall have at least 3 years successful installation experience on projects with mechanical insulations similar in scope and nature to that required for this Project.

B. Requirements of Regulatory Agencies: All insulation shall be in accordance with Jurisdicational Building Code and State and Federal Energy Conservation Standards.

1.4 SUBMITTALS

A. Product Data: Submit manufacturer's specifications and installation instructions for each type of mechanical insulation in accordance with the General Conditions of the Contract. Include schedule showing manufacturer's product number, thickness and furnished accessories for each mechanical system requiring insulation.

B. Provide schedule of pipe sizes with insulation thickness at corresponding fluid temperatures.

1.5 PRODUCT DELIVERY, STORAGE AND HANDLING

A. Delivery of Materials: Deliver insulation, coverings, adhesives, and coatings to site in containers with manufacturer's stamp or label affixed showing fire hazard ratings of products.

B. Storage of Materials: Protect insulation against dirt, water, chemical and mechanical damage. Do not install damaged insulation; remove from project site.

PART 2 - PRODUCTS

2.1 ACCEPTABLE MANUFACTURERS

A. Acceptable manufacturers of insulation materials shall be as follows:
Certain-teed
Owens-Corning
Johns Manville
Armstrong
Knauf
Dow Chemical
3M/Thermal Ceramics (FireMaster)
Unifrax (Fyrewrap)
SpecSeal (Claymac)
Renler (Pyroscat FastR Wrap)
Gilsulate International, Inc. (Gilsulate 500XR Loose-Fill Insulation)
Einsulation
Aerogels

2.2 MATERIALS

A. Conductivity:

TYPE OF INSULATION	MAXIMUM THERMAL CONDUCTIVITY/INCH
Calcium Silicate	0.47 at 600 degrees Fahrenheit
Glass Fiber Pipe Insulation	0.25 at 75 degrees Fahrenheit
Glass Fiber Rigid Equipment Insulation	0.25 at 75 degrees Fahrenheit
Glass Fiber Rigid Duct Insulation	0.24 at 75 degrees Fahrenheit
Glass Fiber Blanket Duct Insulation	0.29 at 75 degrees Fahrenheit
Expanded Polystyrene	0.24 at 75 degrees Fahrenheit
Ceramic Fiber Grease Duct Wrap	0.25 at 70 degrees Fahrenheit
Polyisocyanurate Foam	0.19 at 75 degrees Fahrenheit
Granular Loose Fill	See below

B. Duct Wrap: Blanket-type fiberglass insulation 1-1/2" thick, 0.75 pounds per cubic foot density.

C. Vapor Barrier Coatings: To have a perm rating not more than 0.25 when tested in accordance with ASTM E96, procedure A.

D. Adhesives, Sealers, Facings and Vapor Barrier Coatings: To be compatible with materials to which applied, and shall not corrode, soften, or otherwise attack the pipe or insulation materials in either the wet or dry state. Use only adhesives, sealers, facings, and vapor barrier coatings as recommended by the manufacturer of insulation materials.

E. Chemicals for Treating Paper: Non-soluble.

F. Non-Collapsing Inserts: Calcium Silicate or Polyisocyanurate (Dow Trymer 2000). No Polystyrene inserts are allowed.

G. Granular, Loose-Fill Insulation: Inorganic, nontoxic, nonflammable, sodium potassium aluminum silicate with calcium carbonate filler. Include chemical treatment that renders insulation hydrophobic.

1. Thermal Conductivity (k-Value): 0.60 at 175 deg F and 0.65 at 300 deg F.
2. Application Temperature Range: 35 to 800 deg F.
3. Dry Density: 40 to 42 lb/cu. ft.
4. Strength: 12,000 lb/sq. ft.

2.3 PERFORMANCE CRITERIA

A. Insulation and accessory materials to meet the following criteria:

1. Insulation Materials: To be noncombustible as defined in National Fire Protection Association Pamphlet 220 and to be Underwriter's Laboratory listed.
2. Flame/Smoke Ratings: Provide composite mechanical insulation (insulation, jackets, coverings, sealers, mastics and adhesives) with flame-spread rating of 25 or less, and smoke-developed rating of 50 or less, as tested by ANSI/ASTM E 84 (NFPA 255) method.

2.4 HANDICAP LAVATORY INSULATION

A. Insulation System: Molded closed cell insulation, 3/16-inch nominal wall thickness; provide pre-molded fittings to completely cover tail piece, P-trap, trap arm, hot and cold water supply stop valves and exposed supply tubing; include nylon fasteners for all fittings.

B. Handi Lav-Guard manufactured by Truebro; Trap Wrap manufactured by Brocar Products; Zeston Snap-Trap manufactured by Johns Manville or approved equal.

C. Install at all handicap accessible lavatories installed in this project.

PART 3 - EXECUTION

3.1 GENERAL INSTALLATION REQUIREMENTS

A. Testing of piping and ductwork to be completed prior to application of insulation.

B. Apply insulation tightly over clean, dry surfaces with sections or edges firmly butted together.

C. Make insulation continuous through sleeves or openings in walls and floors.

D. Run sealed vapor barriers continuous throughout all cold surface insulation systems.

E. Avoid the use of staples on vapor barrier jackets. Seal all vapor barrier penetrations with white vapor barrier sealant.

F. Apply adhesives so as not to exceed the coverages recommended by the manufacturers.

G. Leave surfaces clean and ready for painting.

H. Do not insulate cleanouts, access openings or identification plates. Neatly bevel insulation and finishes up to the edges of such openings and stop with sheet metal rings.

I. Provide non-collapsing inserts between pipe and all shields/saddles on all insulated piping 2-1/2" and larger.

3.2 SPECIFIC INSTALLATION REQUIREMENTS

A. Minimum Pipe Insulation Schedule:

ASHRAE 90.1 2010 Standard to be used for all piping insulation.

Exceptions:

1. Factory installed piping within HVAC equipment tested and rated in accordance with ASHRAE 90.1, 2010 referenced procedures.
2. Piping that conveys fluids that have a design operating temperature range between 60°F and 105°F, unless noted to be insulated on drawings or in specifications.
3. Piping that conveys fluids that have not been heated or cooled through the use of fossil fuels or electric power, unless noted to be insulated on drawings or in specifications.

4. In piping 1 in. or less, insulation is not required for stainers, control valves, and balancing valve.

DUCT AND PLENUM INSULATION	
Location	Min. Insulation Value
In unconditioned spaces (i.e. ceiling spaces or unheated spaces)	R-5
Outside building envelope	R-8

Exceptions:

a. When located within equipment.
b. When design temperature difference between the interior and exterior of the duct or plenum does not exceed 15°F (i.e. return air ducts in ceiling spaces).

B. Plumbing System:

1. Domestic Cold Water:

2. Insulate entire system. Thickness per Table of Section 230700, 3.2.A. with colored PVC cover in mechanical rooms.

3. Domestic Hot and Tempered Supply and Circulating Water:

4. Insulate entire system with colored PVC cover in mechanical rooms.

Thicknesses per table of 230700-3.2, A.

5. Domestic Hot Water Heaters, Storage Tanks, and Accumulators (not factory insulated):

Two inch thick fiberglass board, foil faced or faced with Du-All tank wrap or equal. Finish with six-ounce canvas or fiberglass reinforcing mesh and fire retardant lagging adhesive.

6. Chilled Drinking Water:

Thicknesses per Chilled Water Piping System, 40-55 deg. F., of 230700-3.2 A.

7. Fittings:

   Premolded PVC fitting covers with Fiberglass insert. PVC covers shall be rated for return air plenum use.

8. Valves:

   All systems: Oversized pipe covering of same material and thickness as adjacent pipe covering. Finish with six-ounce canvas and heavy coat of vapor barrier mastic coating.

C. Chilling System:

1. Fiberglass pipe covering with all service jacket self-seal lap on all piping with colored PVC cover in mechanical rooms.

2. Fittings:

   All systems: Premolded PVC fitting covers with fiberglass insert. Seal all fittings at end and throat.

3. Valves:

   All systems: Oversized pipe covering of same material and thickness as adjacent pipe covering. Finish with six-ounce canvas or fiberglass reinforcing mesh and heavy coat of vapor barrier mastic coating.

4. Cold Condensate Drain Piping:

   1/2" thickness fiberglass pipe covering with all service jacket self-seal lap.

5. Refrigerant Suction and Liquid Piping: Thicknesses per Refrigerant Piping System of Section 230700 - 3.2, A.

   Fiberglass pipe covering with all service jacket self-seal lap. At Contractor's Option, a closed cell insulation with all joints butted and cemented may be used in lieu of fiberglass. Armaflex 22 or equal. If closed cell insulation is exposed to sunlight, coat all surfaces with UV protection to prevent long term deterioration from sunlight.

6. Refrigerant Hot Gas Piping:

   1" thickness fiberglass pipe covering with all service jacket self-seal lap, or 3/4" thick closed cell insulation. This is for safety purposes only, not for thermal efficiency.

E. Buried Piping:

1. Do not disturb the bottom of trench, or compact and stabilize it to ensure proper support.
2. Remove any standing water in the bottom of trench.
3. Form insulation trench by excavation or by installing drywall side forms to establish required height and width of the insulation.
4. Support piping with proper pitch, separation, and clearance to backfill or side forms using temporary supporting devices that can be removed after back filling with insulation.
5. Place insulation and backfill after field quality-control testing has been completed and results approved.
6. Apply bitumastic coating to carbon-steel anchors and guides. Pour concrete thrust blocks and anchors.
7. Wrap piping at bends, expansion loops, and offsets with mineral-wool insulation of thickness appropriate for calculated expansion amount.
8. Pour loose-fill insulation to required dimension agitating insulation to eliminate voids around piping.
9. Remove temporary hangers and supports.
10. Cover loose-fill insulation with polyethylene sheet a minimum of 4 mils (0.10 mm) thick, and empty loose-fill insulation bags on top.
11. Manually backfill 6 inches (150 mm) of clean backfill. If mechanical compaction is required, manually backfill to 12 inches (300 mm) before using mechanical-compaction equipment.

F. Refrigerant System:

1. Expanded polystyrene pipe covering with all service jacket and self-seal lap.
2. Refrigerant piping and brine piping: Insulate with thickness per Section 230700-3.2, A. Thickness over 2-1/2 inch may be applied in two layers. Ends of inner layer sections shall be staggered and taped. End and longitudinal joints of outer layer shall be staggered with inner layer joints. Secure with 1-inch fiberglass filament tape 12 inches on center. Provide factory applied all service jacket on outer layer. Seal all ends of insulation runs.
3. Valves and Fittings: Pre-molded covers fabricated of same material and thickness as pipe insulation. Fill gaps with injected foam insulation. Secure covers with 1 inch fiberglass filament tape.

4. Vessels: Insulate with two layers of prefabricated curved segments to fit vessel. Stagger all joints. Secure with banding 18 inches on center. Extend side insulation past tank head to thickness of insulation, insert circular end insulation. Fill voids with injected foam insulation.
5. Brine pumps: Pumps shall be insulated with 2-inch total thickness of flexible expanded elastomeric insulation, install to allow for maintenance access to pump.

G. Air Distribution System:

1. Exterior surfaces of outside air, combustion air, mixed air, and recovery coil discharge:

   One and one-half inch thick fiberglass three pound board with all service jacket. Seal all joints and pins with tape material to match jacket. Apply material with weld pins or stick clips.

2. Exterior surfaces of supply and return air plenums where not indicated to be lined:

   One and one-half inch thick fiberglass three pound board with all service jacket. Seal all joints and pins with tape material to match jacket. Apply material with weld pins.

3. Exterior surfaces of exposed supply ductwork not lined:

   One and one-half inch thick fiberglass three pound board with all service jacket. Seal all joints and pins with tape material to match jacket. Apply material with weld pins or stick clips.

4. Concealed supply ductwork not lined:

   One and one-half inch thick 0.75 pound fiberglass duct wrap with foil scrim facings. All joints sealed. Apply material with adhesive or wire 18 inches o.c.

5. Low pressure round runouts to diffusers:

   One and one-half inch thick 0.75 pound fiberglass duct wrap with foil scrim facings. All joints sealed. Apply material with adhesive or wire 18 inches o.c.

6. See Specification Section 230540 – Mechanical Sound and Vibration Control for requirements for lined ductwork.

H. Other Systems:

1. Piping Insulation Exposed to Rainfall:

   Provide 0.016-inch thick corrugated aluminum jacket and fitting covers on all insulation exposed to rainfall. Install seam on bottom of horizontal and angled piping. Seal all joints weather-tight. Seal jacket seams with silicone sealant.

2. Protective Insulation Jacketing:

   Provide high impact colored (Verify Color with Weber State University Facilities before any installation begins) polyvinyl chloride pipe covering on insulated piping that is exposed in mechanical rooms. Thickness to be 30 mil. Install where noted on drawings and per manufacturer's recommendations for hot and cold piping systems. Seal using solvent welding adhesive, providing slip joints as required for expansion and contraction. Ceel-Co Ceel-Tite 300 series, Schuller Zeston 300 series, or approved equal.

3. Condensate Drains Inside Buildings:

   1/2" thickness fiberglass pipe covering with all service jacket self-seal lap.

END OF SECTION 230700

SECTION 233400 - AIR HANDLING FANS

PART 1 - GENERAL

1.1 WORK INCLUDED

A. In-Line Centrifugal Fans
B. Exhaust Fans (Ceiling Type)

1.2 RELATED WORK

A. The General Conditions, Supplementary Conditions and Division 1, General Requirements apply to this section and Contractor shall review and adhere to all requirements of these documents.

1. Section 230500 - Basic Mechanical Requirements.
2. Section 230529 - Basic Mechanical Materials and Methods.
3. Section 230540 - Mechanical Sound and Vibration Control.
4. Section 230548 - Mechanical Seismic Control.
5. Section 230593 - Testing, Adjusting and Balancing.

1.3 QUALITY ASSURANCE

A. Manufacturer's Qualifications: Firms regularly engaged in manufacture of specified fans with characteristics, sizes, and capacities required, whose specified fan has been in satisfactory use in similar service for not less than 3 years.

1.4 SUBMITTALS

A. Submit shop drawings and product data for the following items under provisions of the General Conditions of the Contract:

1. Shop Drawings: Submit assembly-type shop drawings showing unit dimensions, weight loadings, required clearances, construction details, and field connection details for each fan.
2. Product Data: Submit manufacturer's technical product data for all fans showing dimensions, weights, capacities, ratings, fan performance curves with operating point clearly indicated, motor electrical characteristics, gages and finishes of materials. Provide multiple-speed performance curves for fans with variable speed drives.

B. Submit printed Operating Instructions and Maintenance Data for the following items under provisions of Operating and Maintenance Data paragraph in Section 230500:

1. All fans.

1.5 DELIVERY, STORAGE AND HANDLING

A. Deliver fans with factory-installed shipping skids and lifting lugs; pack components in factory-fabricated protective containers.

B. Handle fans carefully to avoid damage to components, enclosures, and finish. Do not install damaged components; replace and return damaged components to fan manufacturer.

C. Store fans in clean dry place and protect from weather and construction traffic.

D. Comply with Manufacturer's rigging and installation instructions for unloading fans and moving them to final location.

1.6 EXTRA STOCK

A. Provide one spare set of belts for each belt-driven fan.

PART 2 - PRODUCTS

2.1 CENTRIFUGAL FANS

A. Acceptable Manufacturers: Subject to compliance with requirements, provide centrifugal fan of one of the following: Twin City, Trane, New York Blower, Pace, ACME, Cook, Barry, Soler and Palau.

B. Type: The fans to be forward curved type completely assembled with fan, fan scroll, motor, belt, drive, belt guard and motor mount, capacity and arrangement as shown on the Drawings, and certified performance tests by Air Moving and Conditioning Association (AMCA) to be submitted with the shop drawing.

C. Housing: To be constructed of steel sheet and parts to be bonderized and then coated with baked primer-finisher. The fan scroll to be attached to the side plates by means of continuous lock seam or welded seam construction.

D. Bearings: The bearings to be of the ball bearing type especially constructed for quiet operation.

E. Motor and Drive: To be belt driven with adjustable motor sheave. Motor nameplate horsepower shall exceed brake horsepower by a minimum of five percent. Belts to be of the oil resistant type. Motor to be especially designed for quiet operation and in accordance with "Motors" in Section 230529. Provide variable frequency drives where indicated, in accordance with Section 230810.

2.2 EXHAUST FANS (CEILING TYPE)

A. Acceptable Manufacturer: Subject to compliance with requirements, provide ceiling type exhaust fan of one of the following: Penn Co. (Zephyr Model), ILG, Pace, Cook, Jenn-Air, Greenheck, ACME, Carnes, Twin City Fan, Broan, Soler and Palau.

B. Type: Shall be of the centrifugal fan, integral grille and housing type, all completely self-contained.

C. Capacity: Capacity and model number of the units shall be as shown on drawings, and shall be certified by AMCA.

D. Motor and Drive: Fan shall be of the direct drive type, and maximum fan motor speed shall be 1150 RPM. Motor shall be of the permanently lubricated ball bearing type, and shall be directly coupled to the fan. The motor and fan shall be easily removable thru the intake grille for service. Direct drive fans to include solid state speed controllers.

E. Housing: Shall be constructed of heavy gauge steel, and shall be completely insulated internally with acoustical insulation material to deaden sound.

F. Backdraft Damper: Each fan shall be equipped with a nonmetallic backdraft damper constructed of neoprene and shall be shatterproof under all conditions.

G. U.L. Label: Each fan shall be approved by the Underwriters' Laboratories, Inc. and shall carry the U.L. Label.

H. Intake Grille: Shall be constructed of steel frame and woven steel grille with a minimum free area of 85%. Intake grille shall have a white, factory baked enamel finish.

PART 3 – EXECUTION

3.1 INSTALLATION OF FANS

A. Install fans where indicated, in accordance with equipment manufacturer's installation instructions, and with recognized industry practices, to ensure that equipment complies with requirements and serves intended purposes.

B. Coordinate with other work, including ductwork, floor construction, and electrical work as necessary to interface installation of air handling equipment with other work.

C. Access: Provide access space around fans for service as indicated, but in no case less than that recommended by manufacturer.

D. Do not operate fans for any other purpose, temporary or permanent, until ductwork is clean, filters in place, bearings lubricated, and fan has been test run under observation.

E. Support: Install floor-mounted fans on 4" high reinforced concrete pad, 6" larger on each side than unit base in accordance with Section 230529.

F. Mounting: Mount fans on vibration isolators, in accordance with manufacturer's instructions and Section 230540.

G. Seismic Restraint: Provide seismic restraints in accordance with Section 230548.

H. Electrical Wiring: Install electrical devices furnished by manufacturer but not specified to be factory-mounted. Furnish copy of manufacturer's wiring diagram submittal to Electrical Installer.

1. Verify that electrical wiring installation is in accordance with manufacturer's submittal and installation requirements of Division 26 sections. Do not proceed with equipment start-up until wiring installation is acceptable to equipment installer with rotation in direction indicated and intended for proper performance. If there is no rotation arrow supplied by the manufacturer, install a correct rotation arrow.

I. Duct Connections: Refer to Division 23 Air Distribution sections. Provide ductwork, accessories, and flexible connections as indicated.

3.2 FIELD QUALITY CONTROL

A. Upon completion of installation of air handling equipment, and after motor has been energized with normal power source, test equipment to demonstrate compliance with requirements. Where possible, field correct malfunctioning equipment, then retest to demonstrate compliance. Replace equipment which cannot be satisfactorily corrected.

3.3 EXTRA BELTS

A. Deliver one spare set of belts for each belt-driven fan unit, obtain receipt from Owner that belts have been received.

END OF SECTION 233400

SECTION 235700 - HEAT TRANSFER

PART 1 - GENERAL

1.1 RELATED WORK

A. The General Conditions, Supplementary Conditions and Division 1, General Requirements apply to this Section, and Contractor shall review and adhere to all requirements of these documents.

B. Related work specified in other Sections:

Section 230500 - Basic Mechanical Requirements
Section 230529 - Basic Mechanical Materials and Methods
Section 230540 - Mechanical Sound and Vibration Control
Section 230593 - Testing, Adjusting and Balancing
Section 230700 - Mechanical Insulation
Section 230900 - Electronic Controls
Section 233400 - Air Handling Fans
Section 236400 - Refrigeration

1.2 SYSTEM DESCRIPTION

A. The work includes, but is not limited to providing the following:

1. Electric Radiant Ceiling Panels
2. All contactors, relays, terminal boxes, thermostats and other electrical appurtenances for electric heat in accordance with "ELECTRIC WIRING" paragraph in Section 230529 - Basic Mechanical Materials and Methods.

1.3 QUALITY ASSURANCE

A. Quality control shall be in accordance with Section 230500 - Basic Mechanical Requirements.

1.4 REFERENCES

A. Reference Standards: Except as modified by governing codes and by the Contract Documents, comply with the applicable provisions and recommendations of the following:

1. Comply with American National Standards Institute (ANSI B31.1) Code for Pressure Piping.

1.5 SUBMITTALS

A. Shop Drawings: Submit Shop Drawings and Product Data for the following items in accordance with the General Conditions of the Contract:

1. Electric Heating Equipment
2. Energy Recovery Units

B. Operating Instructions and Maintenance Data: Submit printed Operating Instructions and Maintenance Data for the following items in accordance with Operating and Maintenance Data paragraph in Section 230500:

1. Electric Heating Equipment
2. Energy Recovery Units

PART 2 - PRODUCTS

2.1 ENERGY RECOVERY VENTILATORS

A. Acceptable Manufacturers: RenewAire, Cook, Fantech, Innovent.

B. See schedules on drawings for sizes and capacities.

C. Energy recovery ventilator shall be packaged static plate enthalpic-energy recovery ventilator.

2.2 CONSTRUCTION – STANDARD CASING (2” WALLS)

A. General: Construct unit as specified herein. Single wall construction is unacceptable and will be rejected. All panels on the unit must be fully removable without the use of cutting tools. All internal components must be removable without dismantling the structural framing of the unit. Unit shall be suitable for outdoor installation as detailed on the plan drawings.

B. Base: Construct base of minimum 10 ga. welded structural steel with cross supports and integral lifting lugs. Bolted bases are unacceptable. Coat base with 2 part epoxy primer and urethane modified enamel top coat. Removable lifting lugs are provided.

C. Framing: Frame is constructed of a combination of galvanized and aluminum tube members designed to support flush-mounted double-wall panels. Vertical framing members must be easily removable, without the use of specialty tools or torches, for

replacement of large internal components. Welded framing is not acceptable unless all internal components can be easily removed without cutting any welds. A closed-cell polyvinyl foam gasket with a thickness of 3/16” or greater must be applied between all framing members and panels.

D. Flooring: Provide 2" double-wall, foam-injected floor construction. Walk on floor material shall be a minimum of 18 ga. galvanized G90 steel. Outer floor panel shall be 22 ga. galvanized G90 steel. Floor panels shall be foam injected for optimal support strength and to eliminate "oil-canning". Floor panels shall be secured to the unit base frame with flush screws for a smooth walk-on surface and sealed with a cross-lined butyl rubber compound containing zero VOC’s and meeting ASTM E-84. A minimum 1” lip must be provided around all floor penetrations. Walk-on grating must be provided over all accessible floor mounted duct connections.

E. Panels: Unit shall have non-load bearing, fully-removable, heavy gauge 2" double-wall panels.

F. Exterior Materials:. Exterior skin shall be galvanized G60 steel or galvanealed steel for painted equipment. Unpainted galvanized exterior unacceptable.

1. A textured polyester paint (light gray color) shall be provided. Coating shall be salt spray tested per ASTM B117 for a minimum of 1,800 hours and have no blistering or red rust on the face when the testing is completed.

G. Interior Materials: Interior skin shall be galvanized G90 steel.

H. Casing Ratings: Maximum casing panel deflection shall not exceed L/250 at the design total static pressure (where L is the longest panel span on the unit). Casing shall meet a SMACNA duct leakage class (DLC) rating of 5.0 or better. The panel insertion loss, per octave band, shall not be less than the following:

Frequency (Hz):	100	125	250	500	1000	2000	4000	8000
Insertion loss (dB):	24	16	30	32	33	34	63	60

I. Insulation: All interior walls, floor, and ceiling shall be double wall and insulated with 2 lb/ft^3 polyurethane injected foam insulation having a minimum R-12 thermal value. No insulation shall be exposed to the air stream. Fiberglass or non-injected foam insulation is not acceptable and will be rejected.

J. Access Doors: Provide double wall doors with the same thickness, insulation and inner/outer wall material as the rest of the air handler. Doors shall be full height (up to 72”) with continuous stainless steel piano hinges extending the full distance of the door. Bi-directional compression latches with integral roller cam and hex-screw locking assembly must be provided. A 6061-T6 extruded aluminum frame with welded corners shall be provided around the full door perimeter. An EPDM bulb-type gasket must be provided in accordance with ASTM D 2000 (foam gasket tape or similar approach is not acceptable as a door seal method). Supply and exhaust air streams shall not be covered by a single door. Access panels in lieu of access door are unacceptable. Rain gutters are provided over all access doors that are not the full height of the unit casing. All doors

that open with pressure shall be provided with a pressure relief safety latch. Provide doors for access to any area requiring routine maintenance.

K. Door Accessories:

1. Access doors shall be provided with [8"x8"/12”x12”] [single/double] pane wire-glass windows in [fan sections/all sections].

2. Access doors shall be provided with aluminum door tie back

3. Kill switches are provided on the fan access doors.

L. Weather hoods: Provide weather hoods with expanded aluminum bird screens over all exposed inlets and outlets. Hoods may ship loose for installation in the field.

M. Roof: Provide roof with standing seam construction which allows removal of individual sections for inspection purposes without removal of the entire roof. A double wall foam injected panel must be provided below the roof liner creating 3 layers of metal between the conditioned air tunnel and ambient air. Pitch roof with sufficient slope to ensure water drainage. Units over 137” wide require double sloped roof designs. Roof overhang to be provided around complete perimeter of the unit. No penetrations can be made to the roof.

2.3 FLAT PLAT HEAT EXCHANGER – SENSIBLE TYPE

A. Provide cross flow flat plate heat exchanger with performance as scheduled. Counter flow heat exchangers are unacceptable due to high pressure drop and fouling concerns.

B. Heat exchanger plates shall be completely smooth with no dimples or corrugations for contaminants to adhere to.

C. Maximum operating differential pressure of no less than 10” wc at 70°F. Maximum operating temperature no less than 400°F.

D. Heat exchanger must have aluminum tube framing (steel framing not acceptable) and minimum 0.008” thick 1100 series aluminum plates.

E. Plate corners must be sealed both mechanically and with sealant to limit cross contamination.

F. Entire heat transfer surface shall be visible for inspection and cleaning without disassembling the heat exchanger.

G. Provide double-sloped stainless steel drain pans under entire heat exchanger. Terminate drain pan connections through the side of the unit. Drain lines must be properly trapped and freeze protected by the installing contractor.

H. A ten (10) year non-prorated parts warranty is provided for all flat plate air-to-air heat exchangers. The warranty period begins at start up or six (6) months after shipment, whichever occurs first.

2.4 BLOWER/MOTOR – DIRECT DRIVE

A. Supply & Exhaust blower: AF or BI blade direct drive plenum fans shall be provided. Fans shall be certified to bear the AMCA seal for air and sound performance. Fan motors must be selected to run at 80 Hz maximum at design conditions. Any fan/motor combination selected to run at a higher frequency will be rejected due to decreased motor life.

B. Motors shall be 3 phase TEFC with a NEMA frame, cast iron construction and a 1.15 service factor. Motor base shall be adjustable. Motor brake horsepower shall not exceed scheduled values. Fan brake horsepower shall not exceed 90% of motor horsepower. All motors shall be premium efficiency with class F insulation. Shaft grounding kits will be provided on all VFD controlled motors 10 HP and larger.

C. Isolation: Blower and motor shall be mounted on a unitary base with 2" housed seismic rated spring isolators.

D. Accessories:

1. Plenum fan inlet screens shall be provided.
2. Variable frequency drives: Provide variable speed drive for supply and exhaust fan(s). VFDs shall be factory provided and installed inside the unit behind an access door

E. VFD options required: Input line reactor.

2.5 DAMPERS

A. Motorized dampers shall be low leakage type with aluminum construction, airfoil blades, vinyl edge seals, metal jamb seals, and synthetic bearings. Gravity dampers shall have aluminum frame, aluminum blades, extruded vinyl edge seals, and synthetic bearings.

B. The following dampers shall be provided at a minimum (additional dampers may be required, please consult the sequence of operation to determine what is needed):

1. Exhaust air shut-off damper, 2-position actuator.
2. Outside air heat exchanger face damper, modulating actuator.
3. Outside air heat exchanger bypass damper, modulating actuator.
4. Exhaust air shut-off damper, 2-position actuator.

2.6 FILTERS

A. Outside air filter: Provide 2” MERV 8 filter bank at the outside air inlet. Mount in a galvanized steel side access slide rack and size for 500 fpm maximum face velocity. Filters must be rated U.L. class 2 per U.L. standard 900.

B. Return air filter: Provide 2” MERV 8 filter bank at the return air inlet. Mount in a galvanized steel side access slide rack and size for 500 fpm maximum face velocity. Filters must be rated U.L. class 2 per U.L. standard 900.

2.7 HEATING

A. Indirect fired duct furnace: An indirect fired duct furnace is provided with performance as specified in the schedule. Furnace shall be ETL listed using ANSI Z83.8 standards. Furnace shall have a tubular heat exchanger constructed of 304 stainless steel. Tubes shall have integral formed dimples to maximize heat transfer and condensate drainage. Burner assembly shall include in-shot type burners, electronic spark ignition system, high temperature safety control, air proving switch, and draft inducer. Allowable gas inlet pressure is 6" to 14" w.c. Gas valve is minimum 4:1 turndown electronic modulating or turndown scheduled, whichever is greater. Vent pipe for indoor unit provided & installed by the contractor.

1. A twenty (20) year non-prorated parts warranty is provided for all furnace heat exchangers. The warranty period begins at start up or six (6) months after shipment, whichever occurs first

2.8 ELECTRICAL

A. Wire units according to NEC and ETL list the entire unit. ETL listing of electrical panel only is unacceptable. All major electrical components shall be UL listed. Factory wire unit for single point power connection. Enclose all power wiring in conduit.

B. Provide non-fused disconnect, fan motor starters/protectors, contactors, control transformer, control circuit fusing, service switch, and terminal block. Units supplied with VFDs shall have individual branch fusing per drive. A motor protector shall be provided if equipment manufacturer’s manual bypass is required.

C. Provide NEMA 3R electrical/control panel.

D. A door safety kill switch shall be provided on all blower section access doors. The door safety kill switch shall de-energize the blower motor if the access door is opened. The kill switch shall prevent motor startup if the blower section access door is open.

E. Lights: Provide vapor proof marine fixtures with LED bulbs in [all access sections/fan sections/filter sections]. Wire lights to a single light switch. Mount light switch near the electrical panel and wire switch to a terminal strip in the electrical panel. Separate 120V power must be provided to the switch for indoor mounted equipment. A transformer will be provided to provide power to the lighting circuit for outdoor mounted equipment.

F. Convenience Receptacles: Provide a GFCI duplex receptacle mounted near the electrical panel and wire receptacle to a terminal strip in the electrical panel. Separate 120V power must be provided to the receptacle for indoor mounted equipment. A transformer will be provided to provide power to the circuit for outdoor mounted equipment

2.9 DDC SYSTEM

A. All controls and control components other than stated above shall be installed by the controls contractor in the field.

2.10 ACCESSORIES

A. Roof curb: A 14” prefabricated insulated roof curb will be provided for the unit. The curb will be suitable for a flat roof. The curb will be shipped disassembled.

2.11 ELECTRIC RADIANT CEILING PANELS

A. The required panels shall be constructed of 26 gauge galvanized steel back overlapping and riveted to a 22 gauge galvanized steel front. The panel heating element shall be a carbon (graphite) element, no resistance wires. The surface shall be a multi-faceted crystalline type which will demonstrate a watt density of 0.72 watts per square foot at a distance of six feet down from the center of the panel, if a low density panel (62.5 watts/sq. ft.) or 1.00 watt per square foot, if a high density panel (95 watts/sq. ft.). The rated input shall be: (95 watts sq. ft. with a surface temperature of not more than 200 degrees F.) The panel voltage and sizes shall be as scheduled. All panels shall come with not less than ten year warranty.

B. Panels shall contain 1", 1 PCF high temperature fiberglass insulation.

C. Provide frame as required for non-lay-in ceilings and assembly clips for all types of installation.

D. Provide minimum 40" flexible conduit and wiring per NEC.

E. Approved manufacturers: Airtex, Aztec, Vulcan, Chromalox, Raywall, QMark.

PART 3 - EXECUTION

3.1 ENERGY RECOVERY VENTILATORS

A. Install in accordance with manufacturers installation instructions.

B. Install with canvas connectors on inlets and outlets.

C. Mounts to provide access and clearance to controls and filters.

3.2 EXTRA MATERIALS

A. Furnish extra material described below that match the product installed, are packaged with protective covering for storage, and are identified on the shipping bill of lading:

1. Filters: Furnish one (1) spare set of pre-filters for each pre-filter bank provided.

3.3 EXAMINATION

A. After completing the installation, inspect the air handler for damag,e dirt or debris. Remove all dirt, construction debris and repair any damage to the finish including chips, scratches, or dents.

B. Replace the filters used during the construction phase.

END OF SECTION 235700

WSU DAVIS CAMPUS D13 REMODEL

CONSTRUCTION DOCUMENTS

GSBS ARCHITECTS

375 WEST 200 SOUTH
SALT LAKE CITY, UT 84101

P 801.521.8600
F 801.521.7913

www.gsbsarchitects.com

CIVIL ENGINEERING:
ENSIGN ENGINEERING
45 WEST 10000 SOUTH, SUITE 500
SANDY, UT 84070
801.255.0529

STUCTURAL ENGINEERING:
REAVELEY ENGINEERING
675 EAST 500 SOUTH, SUITE 400
SALT LAKE CITY, UT 84102
801.486.3883

MECHANICAL ENGINEERING:
COLVIN ENGINEERING
244 WEST 300 NORTH, SUITE 200
SALT LAKE CITY, UT 84103
801.322.2400

ELECTRICAL ENGINEERING:
SPECTRUM ENGINEERS
324 SOUTH STATE STREET, SUITE 400
SALT LAKE CITY, UT 84111
801.328.5151

STATE OF UTAH
5668347-0301
03/09/2015
LICENSED ARCHITECT

LICENSED PROFESSIONAL ENGINEER
Morgan
No. 5567061
3-09-15
STATE OF UTAH

PROFESSIONAL STRUCTURAL ENGINEER
No. 323725
DORIAN LEE ADAMS
STATE OF UTAH
3/6/2015

LICENSED PROFESSIONAL ENGINEER
03/09/15
181524
STATE OF UTAH

LICENSED PROFESSIONAL ENGINEER
No. 181563
DAVID E. WESEMANN
03.09.15
STATE OF UTAH

WSU DAVIS CAMPUS D13 REMODEL

875 SOUTH UNIVERSITY PARK BLVD.
CLEARFIELD, UT 84041

DFCM

4110 STATE OFFICE
BUILDING 450 NORTH
STATE STREET SALT
LAKE CITY, UT 84114

OWNER PROJECT NO.: 14297810
GSBS PROJECT NO.: 2014.095.00
ISSUED DATE: 03/09/2015

VICINITY MAP

DRAWING INDEX

DRAWING INDEX	
Sheet Number	Sheet Name
GENERAL	
G100	COVER SHEET
G101	INDEX
G102	CODE SHEET
G103	MISC. DOCUMENTS
G104	ELECTRICAL COMCHECK
G105	SITE ACCESSIBILITY PLAN
CIVIL	
C100	DRAINAGE IMPROVEMENT PLAN
C200	HANDICAP PARKING AREA DEMOLITION PLAN, SITE AND GRADING PLAN
C300	DETAILS
ARCHITECTURAL	
AD101	DEMO FLOOR PLAN - LEVEL 1
AD102	DEMO FLOOR PLAN - LEVEL 2
AD103	DEMO RCP - LEVEL 1
AD104	DEMO RCP - LEVEL 2
AE201	FLOOR PLAN - LEVEL 1
AE202	FLOOR PLAN - LEVEL 2
AE203	WTFI - LEVEL 1
AE204	WTFI - LEVEL 2
AE205	FLOOR FINISH - LEVEL 1
AE206	FLOOR FINISH - LEVEL 2
AE207	FFE - LEVEL 1
AE208	FFE - LEVEL 2
AE209	RCP - LEVEL 1
AE210	RCP - LEVEL 2
AE211	ROOF PLAN
AE300	EXTERIOR WINDOW ELEVATIONS
AE400	ENLARGED RESTROOMS & ELEVATIONS
AE401	ENLARGED BIOTECH / CHEM LAB & INTERIOR ELEVATIONS
AE402	ENLARGED BIOLOGY LAB & BIOLOGY PREP / STORAGE
AE403	CLASSROOM INTERIOR ELEVATIONS
AE404	CLASSROOM INTERIOR ELEVATIONS
AE405	INTERIOR ELEVATIONS
AE406	INTERIOR ELEVATIONS
AE407	INTERIOR ELEVATIONS
AE408	INTERIOR ELEVATIONS
AE500	PLAN DETAILS
AE501	CEILING, TRANSITION AND RESTROOM DETAILS
AE502	INTERIOR DETAILS
AE503	INTERIOR DETAILS
AE504	SIGNAGE DETAILS
AE600	INTERIOR FINISHES SCHEDULE
AE701	UL LISTINGS
AE702	UL LISTINGS
STRUCTURAL	
SE001	GENERAL STRUCTURAL NOTES
SE002	GENERAL STRUCTURAL NOTES
SB101	FOOTING & FOUNDATION PLAN
SB501	FOOTING & FOUNDATION DETAILS
SB502	FOOTING & FOUNDATION DETAILS
SF102	LEVEL 2 FLOOR FRAMING PLAN

DRAWING INDEX	
Sheet Number	Sheet Name
SF103	ROOF FRAMING PLAN
SF201	BRACED FRAME ELEVATIONS
SF501	FRAMING DETAILS
MECHANICAL	
M001	MECHANICAL LEGEND, SYMBOLS & ABBREVIATIONS
M002	COMCHECK
FP101	LEVEL 1 FIRE PROTECTION PLAN
FP102	LEVEL 2 FIRE PROTECTION PLAN
MD101	DEMO MECHANICAL AND PIPING PLAN - LEVEL 1
MD102	DEMO MECHANICAL AND PIPING PLAN - LEVEL 2
MD103	MECHANICAL / PLUMBING DEMO PLAN - ROOF
MH101	REMODEL MECHANICAL PLAN - LEVEL 1
MH102	REMODEL MECHANICAL PLAN - LEVEL 2
MH103	MECHANICAL / PLUMBING REMODEL PLAN - ROOF
MH501	MECHANICAL DETAILS
MH502	MECHANICAL DETAILS
MH601	MECHANICAL SCHEDULES
MH602	MECHANICAL SCHEDULES
MH701	VRF SCHEMATICS - LEVEL 1 & 2
MH702	CONTROL SCHEMATICS
MH703	CONTROL SCHEMATICS
PLUMBING	
PD101	DEMO PLUMBING PLAN - LEVEL 1
PD102	DEMO PLUMBING PLAN - LEVEL 2
PL101	REMODEL PLUMBING PLAN - LEVEL 1
PL102	REMODEL PLUMBING PLAN - LEVEL 2
PL501	PLUMBING DETAILS
PL601	PLUMBING SCHEDULES
Electrical	
EE001	SHEET INDEX, ABBREVIATIONS, AND GENERAL NOTES
EE501	ELECTRICAL DETAILS PLAN
EE701	TYPICAL MOUNTING HEIGHT DETAILS
ES101	ELECTRICAL SITE PLAN
ED101	MAIN LEVEL ELECTRICAL DEMOLITION PLAN
ED102	SECOND LEVEL ELECTRICAL DEMOLITION PLAN
ED103	PENTHOUSE/ROOF ELECTRICAL DEMOLITION PLAN
EP101	MAIN LEVEL POWER PLAN
EP102	SECOND LEVEL POWER PLAN
EP103	PENTHOUSE/ROOF POWER PLAN
EP111	MAIN LEVEL MECHANICAL POWER PLAN
EP112	SECOND LEVEL MECHANICAL POWER PLAN
EP601	ONE-LINE DIAGRAMS
EP602	EQUIPMENT SCHEDULE
EP603	PANEL SCHEDULES
EP604	PANEL SCHEDULES
EL101	MAIN LEVEL LIGHTING PLAN
EL102	SECOND LEVEL LIGHTING PLAN
EL501	LIGHTING CONTROL DETAILS
EL601	INTERIOR LIGHTING FIXTURE SCHEDULE
EY101	MAIN LEVEL AUXILIARY PLAN
EY102	SECOND LEVEL AUXILIARY PLAN
EY103	PENTHOUSE/ROOF AUXILIARY PLAN
EY601	AUXILIARY DIAGRAMS AND SCHEDULES
FA101	MAIN LEVEL FIRE ALARM PLAN
FA102	SECOND LEVEL FIRE ALARM PLAN
FA103	PENTHOUSE/ROOF FIRE ALARM PLAN
FA601	FIRE ALARM RISER

GSBS ARCHITECTS

375 WEST 200 SOUTH
SALT LAKE CITY, UT 84101

P 801.521.8600
F 801.521.7913

www.gsbsarchitects.com

REVISIONS:

1	03/27/2015	Addendum #1

ABBREVIATIONS

ABV	ABOVE
A.F.F.	ABOVE FINISH FLOOR
ADJ.	ADJUSTABLE
ALUM.	ALUMINUM
ASTM	AMERICAN SOCIETY FOR TESTING MATERIALS
AB	ANCHOR BOLT
<	ANGLE
APPROX.	APPROXIMATE
ARCH.	ARCHITECTURAL OR ARCHITECT
@	AT
BP	BASE PLATE
BRG.	BEARING
B.M.	BENCHMARK
BTWN	BETWEEN
BITUM.	BITUMINOUS
BD.	BOARD
BOT.	BOTTOM
B.O.	BOTTOM OF
BLDG	BUILDING
CLG.	CEILING
CL	CENTER LINE
CT	CERAMIC TILE
CLR.	CLEAR
COL	COLUMN
CONC	CONCRETE
CMU	CONCRETE MASONRY UNIT
CONST.	CONSTRUCTION
CONT.	CONTINUOUS
C.J.	CONTROL JOINT
COORD.	COORDINATE
DBA	DEFORMED BAR ANCHOR
DEPT	DEPARTMENT
DTL.	DETAIL
Ø	DIAMETER
DIA.	DIAMETER
DBL.	DOUBLE
DWGS.	DRAWINGS
EA.	EACH
E.F.	EACH FACE
E.S.	EACH SIDE
E.W.	EACH WAY
EWC	ELECTRIC WATER COOLER
EL.	ELEVATION
ELEV.	ELEVATION
EQ.	EQUAL
EXIST.	EXISTING
EXP.	EXPANSION
E.J.	EXPANSION JOINT
EXT.	EXTERIOR
FT.	FEET OR FOOT
FIN	FINISH
FF	FINISH FLOOR
FE	FIRE EXTINGUISHER
FEC	FIRE EXTINGUISHER CABINET
FLR.	FLOOR
FD	FLOOR DRAIN
FTG.	FOOTING
FDN.	FOUNDATION
GA.	GAGE/GAUGE
GAL.	GALLON
GPM	GALLONS PER MINUTE
GALV.	GALVANIZED
GOVT.	GOVERNMENT
GFCI	GOVERNMENT FURNISHED CONTRACTOR INSTALLED
GFGI	GOVERNMENT FURNISHED GOVERNMENT INSTALLED
GND.	GROUND
GYP. BD.	GYPSUM BOARD
GWB.	GYPSUM WALL BOARD
HC.	HANDICAPPED
HDWR.	HARDWARE
HSA	HEADED STUD ANCHOR
HVAC	HEATING/VENTILATION/AIR CONDITIONING
HT.	HEIGHT
H.M.	HOLLOW METAL
HORIZ.	HORIZONTAL
HR.	HOUR
HYD	HYDRANT
IN.	INCHES OR INCH
INFO.	INFORMATION
I.D.	INSIDE DIAMETER
I.F.	INSIDE FACE
INSUL.	INSULATION
INT.	INTERIOR
LAV.	LAVATORY
LT.	LIGHT
LT. WT.	LIGHT WEIGHT
MAINT.	MAINTENANCE
MANUF.	MANUFACTURER
MFR.	MANUFACTURER
M.O.	MASONRY OPENING
MAT.	MATERIAL
MAX.	MAXIMUM
MECH.	MECHANICAL
MTL.	METAL
MIN.	MINIMUM
MISC.	MISCELLANEOUS
N.I.C.	NOT IN CONTRACT
N.T.S.	NOT TO SCALE
#	NUMBER
NO.	NUMBER
O.C.	ON CENTER
OWSJ	OPEN WEB STEEL JOIST
OPP.	OPPOSITE
O.D.	OUTSIDE DIAMETER
O.F.	OUTSIDE FACE
O.H.	OVERHEAD
OHD	OVERHEAD DOOR
PNT	PAINTED OR PAINT
PTN	PARTITION
PERP.	PERPENDICULAR
PLAM	PLASTIC LAMINATE
PL.	PLATE
PCF	POUNDS PER CUBIC FOOT
PLF	POUNDS PER LINEAL FOOT
PSF	POUNDS PER SQUARE FOOT
PSI	POUNDS PER SQUARE INCH
PROT.	PROTECTION
QTY.	QUANTITY
RAD.	RADIUS
REINF.	REINFORCED
REQ	REQUIRED
R.D.	ROOF DRAIN
RM.	ROOM
R.O.	ROUGH OPENING
SCHED.	SCHEDULE
SHT.	SHEET
SHR.	SHOWER
SIM.	SIMILAR
STC	SOUND TRANSMISSION COEFFICIENT
SPEC.	SPECIFICATION
STD.	STANDARD
STRUCT.	STRUCTURAL
SUPER.	SUPERVISOR
SUSP.	SUSPENDED
THRU	THROUGH
T.O.	TOP OF
T.O.A.	TOP OF ASPHALT
T.O.C.	TOP OF CURB
T.O.F.	TOP OF FOOTING
T.O.S.	TOP OF SLAB OR SIDEWALK
T.O.W.	TOP OF WALL
TYP.	TYPICAL
U.N.O.	UNLESS NOTED OTHERWISE
VEN.	VENEER
VERT.	VERTICAL
VEST.	VESTIBULE
VCT	VINYL COMPOSITION TILE
WWF	WELDED WIRE FABRIC
W/	WITH
WD.	WOOD

GRAPHIC SYMBOLS

GRID	GRID LINES
# SHEET	DETAIL SYMBOL DETAIL NUMBER/ SHEET WHERE DETAIL IS DRAWN
# SHEET	BUILDING SECTION SYMBOL SECTION REFERENCE/ SHEET WHERE SECTION IS DRAWN
# SHEET	WALL SECTION SYMBOL SECTION REFERENCE/ SHEET WHERE SECTION IS DRAWN
SHEET #	EXTERIOR ELEVATION SYMBOL ELEVATION IDENTIFICATION SHEET WHERE ELEVATION IS DRAWN
SHEET #	INTERIOR ELEVATION SYMBOL ELEVATION IDENTIFICATION SHEET WHERE ELEVATION IS DRAWN
	ELEVATION CONTROL POINT OR DATUM POINT
100A	DOOR TAG DOOR NUMBER
W1	WINDOW TAG WINDOW OR STOREFRONT NUMBER
NAME 101	ROOM TAG ROOM NAME ROOM NUMBER
1	REVISION TAG
# VIEW NAME SHEET SCALE	VIEW TITLE VIEW NUMBER/ SHEET WHERE VIEW IS LOCATED VIEW NAME/ VIEW SCALE

MATERIALS/LEGEND

- CONCRETE MASONRY UNIT
- FACE BRICK
- CONCRETE (POURED IN PLACE)
- GYPSUM BOARD OR SETTING BEDS
- INSULATION (BATT & BLANKET)
- INSULATION (RIGID/SEMI-RIGID)
- PLYWOOD
- CONTINUOUS ROUGH WOOD
- BLOCKING, ROUGH WOOD
- METAL (LARGE SCALE)
- GRAVEL
- EARTH
- COMPACTED FILL
- QUARRY/CERAMIC TILE
- FIREPROOFING
- WOOD

WSU DAVIS CAMPUS D13 REMODEL

875 SOUTH UNIVERSITY PARK BLVD.
CLEARFIELD, UT 84041

DFCM

4110 STATE OFFICE BUILDING 450 NORTH STATE STREET SALT LAKE CITY, UT 84114

OWNER PROJECT NO.:	14297810
GSBS PROJECT NO.:	2014.095.00
ISSUED DATE:	03/09/2015

INDEX

G101

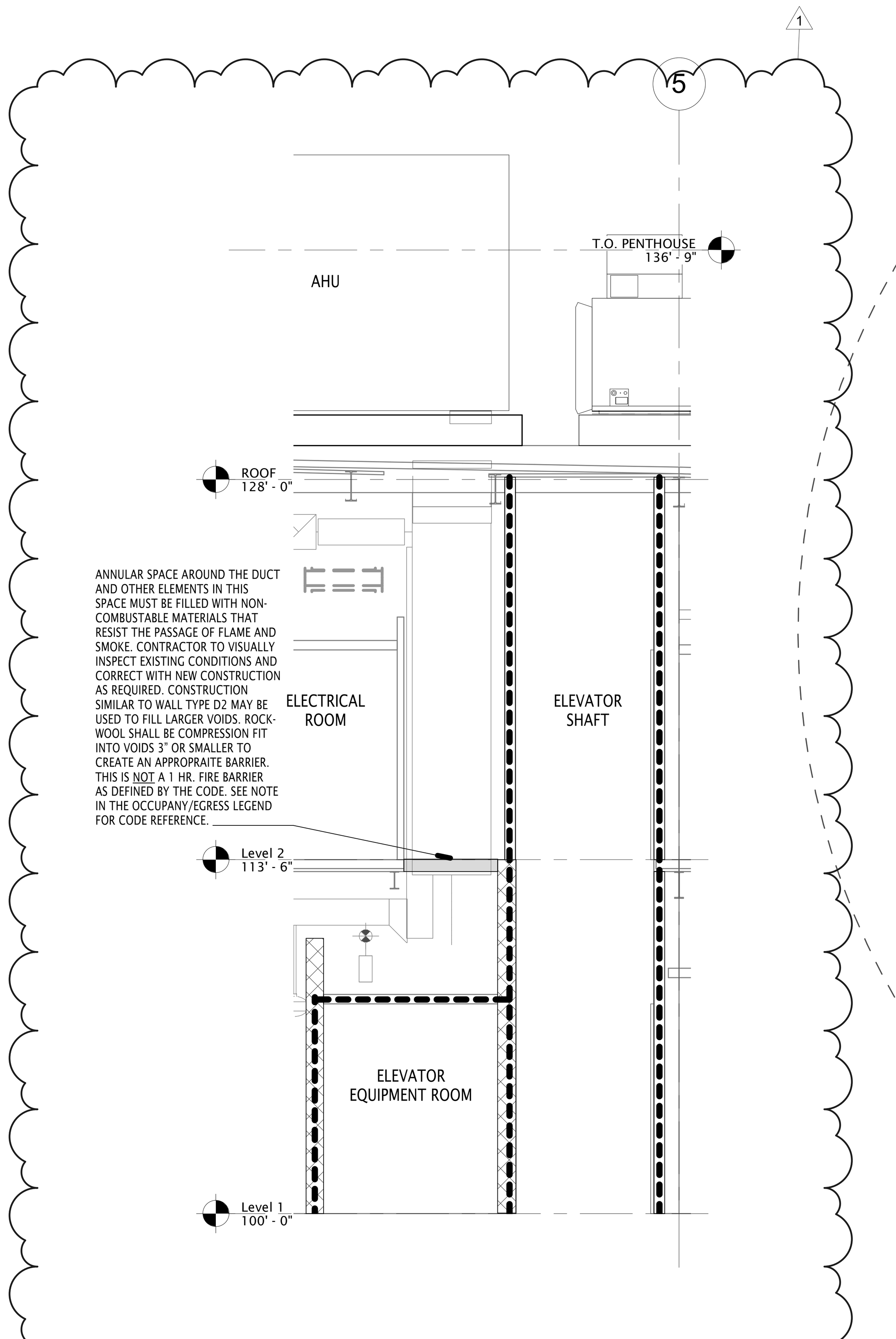

3 GI102 MAIN MECHANCIAL PENETRATION SECTION
1/4" = 1'-0"

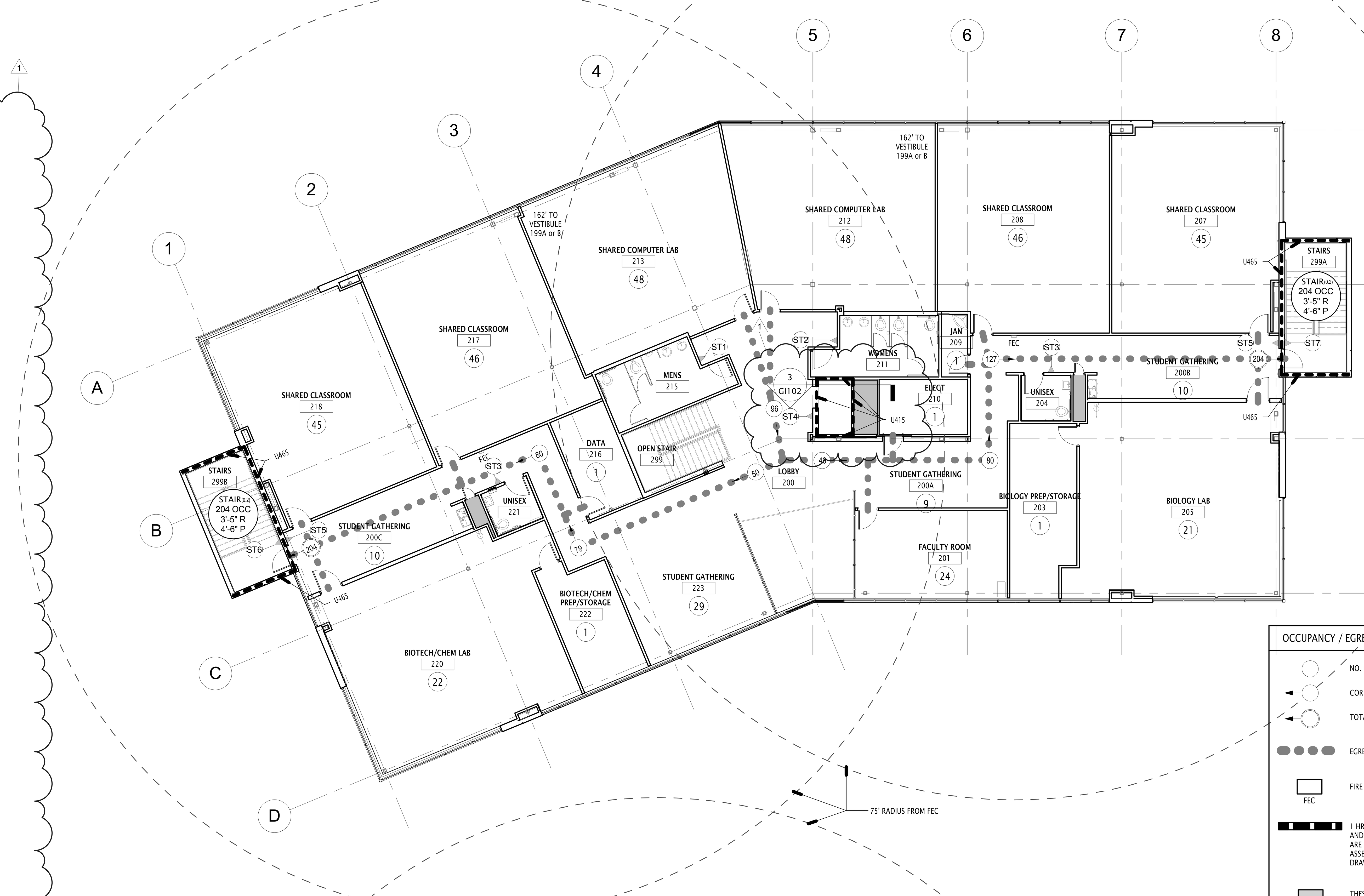

2 GI102 CODE PLAN - LEVEL 2
3/32" = 1'-0"

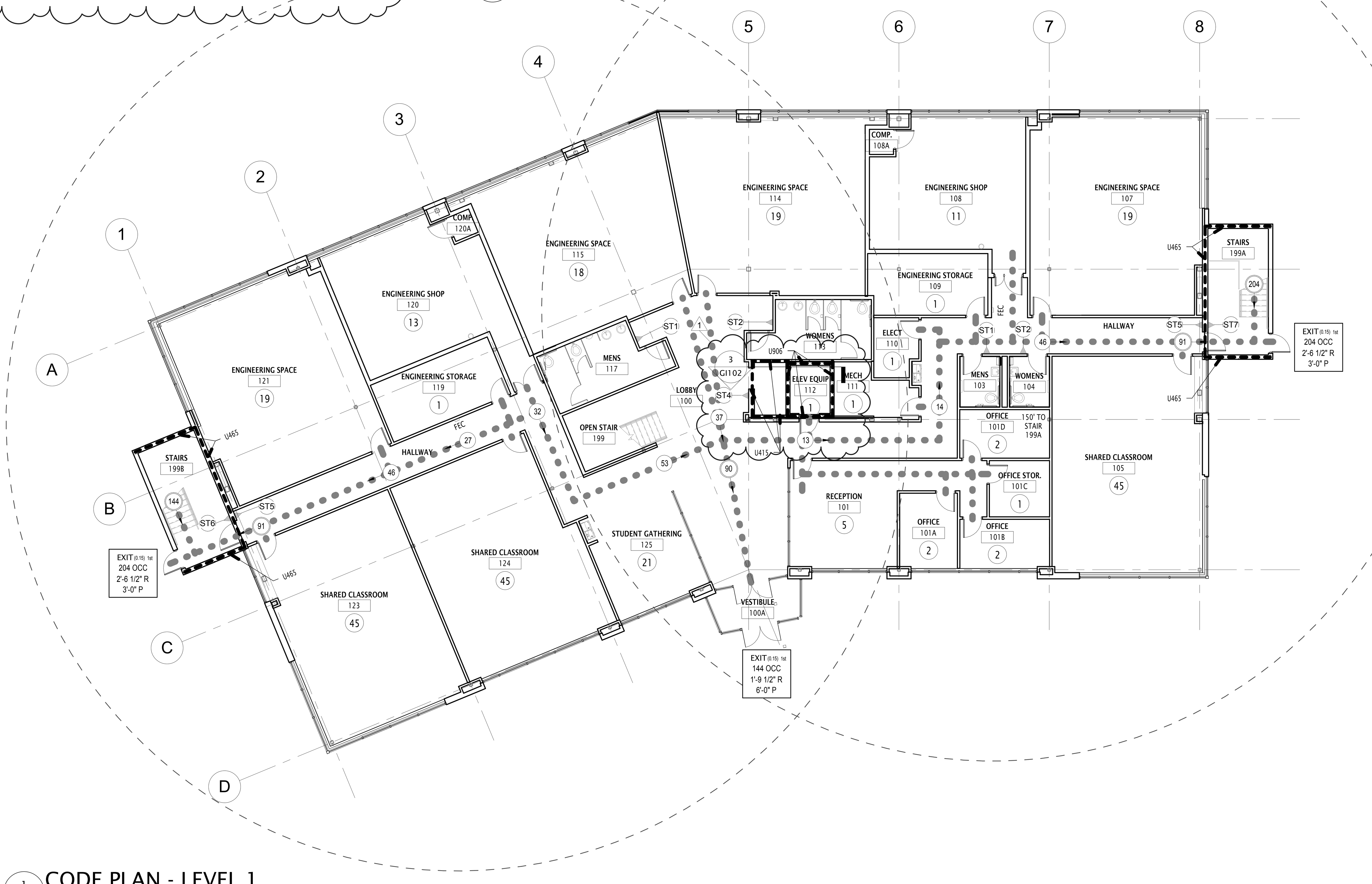

1 GI102 CODE PLAN - LEVEL 1
3/32" = 1'-0"

OCCUPANCY / EGRESS LEGEND

- NO. OF OCCUPANTS
- CORRIDOR TRIBUTARY LOAD
- TOTAL NO. OF OCCUPANTS AT EXIT
- EGRESS PATH
- FEC — FIRE EXTINGUISHER CABINET
- 1 HR. RATED WALL (ALL RATED WALLS ARE EXISTING AND RATINGS MUST BE MAINTAINED. UL LISTINGS ARE SHOWN ON PLAN. THESE ARE ASSUMED RATING ASSEMBLIES USED ACCORDING TO THE ORIGINAL DRAWINGS.
- THESE AREAS HAVE NUMEROUS PENETRATIONS THROUGH THE FLOOR AT LEVEL 2. PROTECT THE ANNULAR SPACE AROUND ALL PENETRATING ELEMENTS WITH AN APPROVED NON-COMBUSTIBLE MATERIAL THAT RESISTS THE FREE PASSAGE OF FLAME AND THE PRODUCTS OF COMBUSTION AS REQUIRED IN IBC 2012 717.6.3.

ELEVATOR EQUIPMENT ROOM 112 HAS A RATED CEILING THAT MUST BE MAINTAINED.

PROVIDE FIRE STOPPING AS REQUIRED TO MAINTAIN RATINGS.

PROVIDE FIRE STOPPING AT ANY PENETRATIONS IN RATED ASSEMBLIES AND IN LOCATIONS THAT CANNOT BE SEALED TO RATED STANDARDS SUCH AS HEADS OF RATED WALLS RUN TO EXPOSED DECK ABOVE.

EXISTING DRAWINGS INDICATE THAT THESE RATED SYSTEMS ARE SEPARATE WALL TYPES THAT HAVE, IN MANY INSTANCES, BEEN COVED WITH FURRING WALLS FOR FINAL FINISH. NEW CONSTRUCTION REQUIRES REMOVAL OF THESE FURRING WALLS AT SOME LOCATIONS. ALERT ARCHITECT TO ANY UNFORESEEN CONDITIONS RELATED TO THESE RATING REQUIREMENTS.

DEFERRED SUBMITTALS:	DATES:
FIRE SPRINKLERS	APRIL 2015
FIRE ALARM	APRIL 2015
SEISMIC BRACING FOR MECHANICAL	APRIL 2015
SEISMIC BRACING FOR ELECTRICAL	APRIL 2015
SEISMIC BRACING FOR PLUMBING	APRIL 2015
SEISMIC BRACING FOR MILLWORK	APRIL 2015

CODE ANALYSIS

APPLICABLE CODES

	Year		Year
International Building Code	2012	National Electrical Code	2011
International Mechanical Code	2012	Uniform Code for Building Conservation	2012
International Fuel Gas Code	2012		
International Plumbing Code	2012	ADA Accessibility Guidelines	ANSI 2009
International Fire Code	2012		
International Energy Conservation Code ASHRAE 90.1	2012		

A. Occupancy and Group: E B

Change in Use: Yes X No ___ Mixed Occupancy: Yes ___ No X

Special Use and Occupancy (e.g. High Rise, Covered Mall):

B. Seismic Design Category: D Design Wind Speed: 80 mph

C. Type of Construction (circle one):

I/A I/B II/A II/B III/A III/B IV/HT V/A (V/B)

D. Fire Resistance Rating Requirements for the Exterior Walls based on the fire separation distance (in hours):

North: NA South: NA East: NA West: NA

E. Mixed Occupancies: Yes Nonseparated Uses: Yes

F. Sprinklers:

Required: Yes Provided: Yes

Type of Sprinkler System (IBC 903.3.1) See FS Sheets

G. Number of Stories: 2 Building Height: 36'-9"

H. Actual Area per Floor (square feet): 27,083 SF

I. Tabular Area: (table 503): B: 9,000 SF, 2 stories, 40' E: 9,500 SF, 1 story, 40'

J. Area Modifications: $A_a = \{A_t + [A_t x I_f] + [A_t x I_s]\}$ $I_f = [F/P-0.25]W/30$

[525/535-0.25][(505x30+20x20)/525]/30 = .72

$I_s = 2$

Frontage Increase: B: 9,000(1.72) = 15,480 SF E: 9,500(1.72) = 16340 SF

Sprinkler Height Increase: B: 60' E: 60'

Sprinkler Story Increase: B: 3 stories E: 2 stories

Sprinkler Area Increase: B: 9,000 (2) = 18,000 SF E: 9,500 (2) = 19,000 SF

c) Total Allowable Area for:

1) One Story: B: 42,480 SF; E: 44,840 SF

2) Two Story: A (2a B: 42,480 SF; E: 44,840 SF

3) Total Allowable B: 84,960 SF; E: 89,680 SF

d) Unlimited Area Building: Yes ___ No X Code Section: ___

K. Fire Resistance Rating Requirements for Building Elements (hours).

Element	Hours	Assembly Listing	Element	Hours	Assembly Listing
Exterior Bearing Walls			Floors - Ceiling Floors		
Interior Bearing Walls			Roofs - Ceiling Roofs		
Exterior Non-Bearing Walls			Exterior Doors and Windows		
Structural Frame			Shaft Enclosures	1	EXST.
Partitions - Permanent			Fire Walls		
Fire Barriers			Fire Partitions		
			Smoke Partitions		

L. Design Occupant Load: 680

Exit Width Required: 8'-6" Exit Width Provided: 12'-0"

M. Minimum Number of Required Plumbing Facilities:

a) Water Closets - Required (m) 8 (f) 8 Provided (m) 8 (f) 8

b) Urinals - Required (m) Provided (m)

c) Lavatories - Required (m) 6 (f) 6 Provided (m) 6 (f) 6

d) Bath Tub or Showers: ___

e) Drinking Fountains: 7 Service Sinks: 1

FOOTNOTES:

1) In case of conflict with the U.S. Department of Justice Federal Registers Parts I through V - ADA guidelines and specific reference to the International Building Code Accessibility Chapters, the more requirements shall govern.

2) Additional Code Information shall be provided at the discretion of the Building Official for Complex Buildings. Including, but not all limited to:

a) High Rise Requirements.
b) Atriums.
c) Performance Based Criteria.
d) Means or Egress Analysis.
e) Fire Assembly Locator Sheet.
f) Exterior and Interior Accessibility Route.
g) Fire Stopping, Including Tested Design Number.

OCCUPANCY REQUIREMENTS:

1. A code inspection report recommending that a certificate of occupancy be issued.
2. Final report from the special inspection agency.
3. Certificate of fire clearance from the State Fire Marshall.
4. Final approval from the State Elevator inspector, if applicable.
5. Final approval from the State boiler inspector, if applicable.
6. Report of the disinfection of the potable water system. IPC 610
7. A Certificate of Compliance from the approved fabricator, if applicable. IBC 1704.2.2
8. A stamped and signed final report from the structural engineer when structural observation is required by IBC 1710.
9. An NFRC Certificate for fenestration without the NFRC label.
10. Final report from the special inspector and the mechanical engineer when smoke control is required. The reports must comply with IBC 909.18.8.3.

CODE REQUIRED SIGNAGE SCHEDULE

Sign Room Name	Sign Type	Copy Text	Copy Text Size	Braille Text	Height	Width	Mounting Height	Furnished By	Installed By
MENS 103	ST1	MEN	5/8"	MEN	8"	7"	5' - 0"	OWNER	CONTRACTOR
MENS 117	ST1	MEN	5/8"	MEN	8"	7"	5' - 0"	OWNER	CONTRACTOR
MENS 215	ST1	MEN	5/8"	MEN	8"	7"	5' - 0"	OWNER	CONTRACTOR
WOMENS 104	ST2	WOMEN	5/8"	WOMEN	8"	7"	5' - 0"	OWNER	CONTRACTOR
WOMENS 113	ST2	WOMEN	5/8"	WOMEN	8"	7"	5' - 0"	OWNER	CONTRACTOR
WOMENS 211	ST2	WOMEN	5/8"	WOMEN	8"	7"	5' - 0"	OWNER	CONTRACTOR
UNISEX 204	ST3	RESTROOM	5/8"	RESTROOM	8"	7"	5' - 0"	OWNER	CONTRACTOR
UNISEX 221	ST3	RESTROOM	5/8"	RESTROOM	8"	7"	5' - 0"	OWNER	CONTRACTOR
LOBBY 100	ST4	IN CASE OF FIRE, USE STAIRS	5/8"	IN CASE OF FIRE, USE STAIRS	8"	7"	5' - 0"	OWNER	CONTRACTOR
LOBBY 200	ST4	IN CASE OF FIRE, USE STAIRS	5/8"	IN CASE OF FIRE, USE STAIRS	8"	7"	5' - 0"	OWNER	CONTRACTOR
HALLWAY 100	ST5	STAIR	5/8"	STAIR	8"	7"	5' - 0"	OWNER	CONTRACTOR
HALLWAY 100	ST5	STAIR	5/8"	STAIR	8"	7"	5' - 0"	OWNER	CONTRACTOR
STUDENT GATHERING 200C	ST5	STAIR	5/8"	STAIR	8"	7"	5' - 0"	OWNER	CONTRACTOR
STUDENT GATHERING 200B	ST5	STAIR	5/8"	STAIR	8"	7"	5' - 0"	OWNER	CONTRACTOR
STAIRS 199B	ST6	NORTH STAIR NO ROOF ACCESS LEVEL 1 EXIT HERE LEVELS 1 TO 2	SEE SIGN TYPE	NORTH STAIR LEVEL 1 EXIT HERE LEVELS 1 TO 2	1' - 6"	1' - 4"	5' - 0"	OWNER	CONTRACTOR
STAIRS 299B	ST6	NORTH STAIR NO ROOF ACCESS LEVEL 2 EXIT HERE LEVELS 1 TO 2	SEE SIGN TYPE	NORTH STAIR LEVEL 2 EXIT HERE LEVELS 1 TO 2	1' - 6"	1' - 4"	5' - 0"	OWNER	CONTRACTOR
STAIRS 199A	ST7	SOUTH STAIR ROOF ACCESS LEVEL 1EXIT HERE LEVELS 1 TO 2		SOUTH STAIR LEVEL 1 EXIT HERE LEVELS 1 TO 2	1' - 6"	1' - 4"	5' - 0"	OWNER	CONTRACTOR
STAIRS 299A	ST7	SOUTH STAIR ROOF ACCESS LEVEL 2 EXIT HERE LEVELS 1 TO 2		SOUTH STAIR LEVEL 2 EXIT HERE LEVELS 1 TO 2	1' - 6"	1' - 4"	5' - 0"	OWNER	CONTRACTOR

GSBS ARCHITECTS
375 WEST 200 SOUTH
SALT LAKE CITY, UT 84101
P 801.521.8600
F 801.521.7913
www.gsbsarchitects.com

REVISIONS:

1	03/27/2015	Addendum #1

STATE OF UTAH LICENSED ARCHITECT GARTH R. SHAW 5668347-0301 03/09/2015

WSU DAVIS CAMPUS D13 REMODEL

875 SOUTH UNIVERSITY PARK BLVD.
CLEARFIELD, UT 84041

DFCM

4110 STATE OFFICE BUILDING 450 NORTH STATE STREET SALT LAKE CITY, UT 84114

OWNER PROJECT NO.:	14297810
GSBS PROJECT NO.:	2014.095.00
ISSUED DATE:	03/09/2015

CODE SHEET

GI102

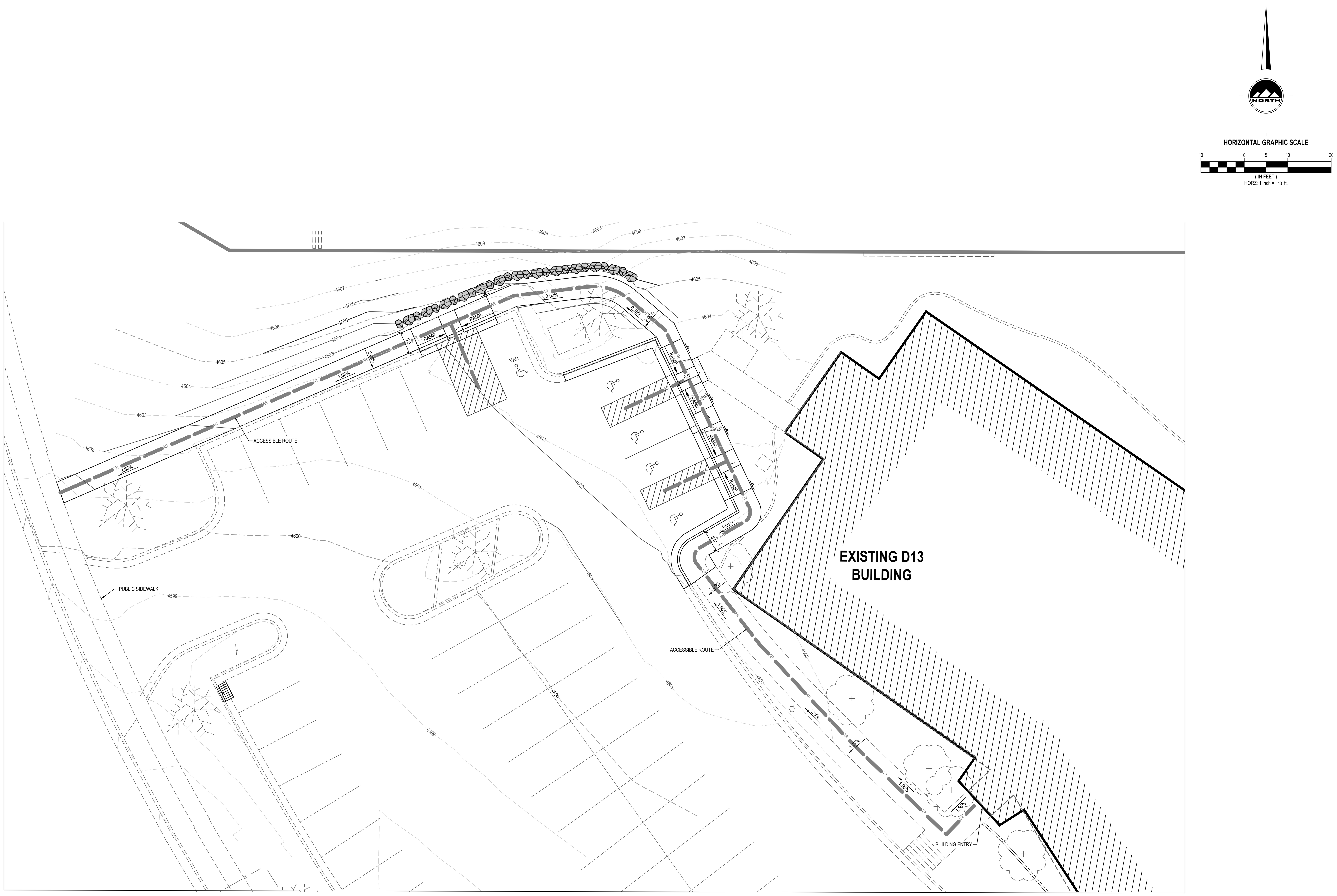

SITE ACCESSIBILITY PLAN

GSBS ARCHITECTS

375 WEST 200 SOUTH
SALT LAKE CITY, UT 84101

P 801.521.8600
F 801.521.7913

www.gsbsarchitects.com

REVISIONS:

1	3/27/2015	ADDENDUM #1, NEW SHEET

ENSIGN

SALT LAKE CITY
45 W. 10000 S., Suite 500
Sandy, Utah 84070
Phone: 801.255.0529
Fax: 801.255.4449

LAYTON
Phone: 801.547.1100

TOOELE
Phone: 435.843.3590

CEDAR CITY
Phone: 435.865.1453

RICHFIELD
Phone: 435.896.2983

COLORADO SPRINGS
Phone: 719.476.0119

WWW.ENSIGNUTAH.COM

CALL BLUESTAKES @ 811 AT LEAST 48 HOURS PRIOR TO THE COMMENCEMENT OF ANY CONSTRUCTION.

811 Know what's below. Call before you dig.

WSU DAVIS CAMPUS D13 REMODEL

875 SOUTH UNIVERSITY PARK BLVD.
CLEARFIELD, UT 84041

DFCM

4110 STATE OFFICE BUILDING 450 NORTH STATE STREET SALT LAKE CITY, UT 84114

OWNER PROJECT NO.:	14297810
GSBS PROJECT NO.:	2014.095.00
ISSUED DATE:	03/09/2015

SITE ACCESSIBILITY

GI-105

GENERAL NOTES

1. ALL CONSTRUCTION MUST STRICTLY FOLLOW THE STANDARDS AND SPECIFICATIONS SET FORTH BY: THE DESIGN ENGINEER, APWA (2012 EDITION), AND THE CURRENT MANUAL ON UNIFORM TRAFFIC CONTROL DEVICES (M.U.T.C.D.) (2009 EDITION). THE ORDER LISTED ABOVE IS ARRANGED BY SENIORITY. THE LATEST EDITION OF ALL STANDARDS AND SPECIFICATIONS MUST BE ADHERED TO. ALL CONSTRUCTION MUST ALSO STRICTLY ADHERE TO THE FOLLOWING: THE INTERNATIONAL PLUMBING CODE (2012 EDITION), UTAH DRINKING WATER REGULATIONS, THE INTERNATIONAL BUILDING CODE (IBC) (2012 EDITION), ADA AND ADAAG (2010 EDITION). IF A CONSTRUCTION PRACTICE IS NOT SPECIFIED BY ANY OF THE LISTED SOURCES, CONTRACTOR MUST CONTACT DESIGN ENGINEER FOR DIRECTION.
2. CONTRACTOR TO STRICTLY FOLLOW THE MOST CURRENT COPY OF THE SOILS REPORT FOR THIS PROJECT, GEOTECHNICAL INVESTIGATION FOR THE PROPOSED TASS PARKING LOT, PREPARED BY IGES, REPORT DATED AUGUST 1, 2014. ALL GRADING INCLUDING BUT NOT LIMITED TO CUT, FILL, COMPACTION, ASPHALT SECTION, SUBBASE, TRENCH EXCAVATION/BACKFILL, SITE GRUBBING, AND FOOTINGS MUST BE COORDINATED DIRECTLY WITH SOILS REPORT.
3. CONTRACTOR SHALL BE RESPONSIBLE FOR DUST CONTROL. WET DOWN DRY MATERIALS AND RUBBISH TO PREVENT BLOWING.
4. CONTRACTOR SHALL BE RESPONSIBLE FOR ANY DAMAGE TO ADJACENT SURFACE IMPROVEMENTS.
5. CONTRACTOR SHALL BE RESPONSIBLE FOR CORRECTING ANY SETTLEMENT OF OR DAMAGE TO EXISTING UTILITIES.
6. THE CONTRACTOR IS RESPONSIBLE TO FURNISH ALL MATERIALS TO COMPLETE THE PROJECT.
7. UNLESS OTHERWISE NOTED, ALL ON-GRADE CONCRETE WILL BE PLACED ON A MINIMUM 4" GRAVEL BASE OVER A WELL COMPACTED (95 % DENSITY PER ASTM D-1557) SUB GRADE.
8. THE LOCATIONS OF UNDERGROUND FACILITIES SHOWN ON THESE PLANS ARE BASED ON FIELD SURVEYS AND LOCAL UTILITY COMPANY RECORDS. IT SHALL BE THE CONTRACTOR'S FULL RESPONSIBILITY TO CONTACT THE VARIOUS UTILITY COMPANIES TO LOCATE THEIR FACILITIES PRIOR TO PROCEEDING WITH CONSTRUCTION. NO ADDITIONAL COMPENSATION SHALL BE PAID TO THE CONTRACTOR FOR DAMAGE AND REPAIR TO THESE FACILITIES CAUSED BY HIS WORK FORCE. CONTRACTOR SHALL START INSTALLATION AT LOW POINT OF ALL NEW GRAVITY UTILITY LINES.
9. ALL DIMENSIONS, GRADES, AND UTILITY DESIGN SHOWN ON THE PLANS SHALL BE VERIFIED BY THE CONTRACTOR PRIOR TO CONSTRUCTION. CONTRACTOR SHALL NOTIFY THE ENGINEER IF ANY DISCREPANCIES EXIST, PRIOR TO PROCEEDING WITH CONSTRUCTION FOR NECESSARY PLAN OR GRADE CHANGES. NO EXTRA COMPENSATION SHALL BE PAID TO THE CONTRACTOR FOR WORK HAVING TO BE REDONE DUE TO THE DIMENSIONS OR GRADES SHOWN INCORRECTLY ON THESE PLANS, IF SUCH NOTIFICATION HAS NOT BEEN GIVEN.
10. NO CHANGE IN DESIGN LOCATION OR GRADE WILL BE MADE BY THE CONTRACTOR WITHOUT THE WRITTEN APPROVAL OF THE PROJECT ENGINEER.
11. NATURAL VEGETATION AND SOIL COVER SHALL NOT BE DISTURBED PRIOR TO ACTUAL CONSTRUCTION OF A REQUIRED FACILITY OR IMPROVEMENT. MASS CLEARING OF THE SITE IN ANTICIPATION OF CONSTRUCTION SHALL BE AVOIDED.
12. CONTRACTOR SHALL BE RESPONSIBLE FOR FURNISHING, MAINTAINING, OR RESTORING ALL MONUMENTS AND MONUMENT REFERENCE MARKS WITHIN THE PROJECT SITE.
13. CONTRACTOR TO LAYOUT AND POTHOLE FOR ALL POTENTIAL CONFLICTS WITH UTILITY LINES ON- OR OFF-SITE AS REQUIRED PRIOR TO ANY CONSTRUCTION, AND THE CONTRACTOR WILL VERIFY DEPTHS OF UTILITIES IN THE FIELD BY POT HOLING A MINIMUM OF 300 FEET AHEAD OF PIPELINE CONSTRUCTION TO AVOID CONFLICTS WITH DESIGNED PIPELINE GRADE AND ALIGNMENT. IF A CONFLICT ARISES RESULTING FROM THE CONTRACTOR'S NEGLIGENCE TO POTHOLE UTILITIES, THE CONTRACTOR WILL BE REQUIRED TO RESOLVE THE CONFLICT WITHOUT ADDITIONAL COST OR CLAIM TO THE OWNER OR ENGINEER.
14. ANY AREA OUTSIDE THE LIMIT OF WORK THAT IS DISTURBED SHALL BE RESTORED TO ITS ORIGINAL CONDITION AT NO COST TO OWNER.
15. CONSULT ALL OF THE DRAWINGS AND SPECIFICATIONS FOR COORDINATION REQUIREMENTS BEFORE COMMENCING CONSTRUCTION.
16. AT ALL LOCATIONS WHERE EXISTING PAVEMENT ABUTS NEW CONSTRUCTION, THE EDGE OF THE EXISTING PAVEMENT SHALL BE SAWCUT TO A CLEAN, SMOOTH EDGE.
17. ALL CONSTRUCTION AND MATERIALS SHALL BE IN ACCORDANCE WITH THE MOST RECENT, ADOPTED EDITION OF ADA ACCESSIBILITY GUIDELINES.
18. CONTRACTOR SHALL, THROUGHOUT THE PERIOD OF THE CONTRACT, BE LICENSED IN THE STATE OF UTAH AND SHALL BE BONDABLE FOR AN AMOUNT REQUIRED BY THE OWNER.
19. CONTRACTOR SHALL BE RESPONSIBLE TO PROVIDE ALL WATER, POWER, SANITARY FACILITIES AND TELEPHONE SERVICES AS REQUIRED FOR THE CONTRACTOR'S USE DURING CONSTRUCTION.
20. CONTRACTOR SHALL BE RESPONSIBLE FOR ADEQUATELY SCHEDULING INSPECTION AND TESTING OF ALL FACILITIES CONSTRUCTED UNDER THIS CONTRACT. ALL TESTING SHALL CONFORM TO THE REGULATORY AGENCY'S STANDARD SPECIFICATIONS. ALL RE-TESTING AND/OR RE-INSPECTION SHALL BE PAID FOR BY THE CONTRACTOR.
21. IF EXISTING IMPROVEMENTS NEED TO BE DISTURBED AND/OR REMOVED FOR THE PROPER PLACEMENT OF IMPROVEMENTS TO BE CONSTRUCTED BY THESE PLANS, THE CONTRACTOR SHALL BE RESPONSIBLE FOR PROTECTING EXISTING IMPROVEMENTS FROM DAMAGE. COST OF REPLACING OR REPAIRING EXISTING IMPROVEMENTS SHALL BE INCLUDED IN THE UNIT PRICE BID FOR ITEMS REQUIRING REMOVAL AND/OR REPLACEMENT. THERE WILL BE NO EXTRA COST DUE TO THE CONTRACTOR FOR REPLACING OR REPAIRING EXISTING IMPROVEMENTS.
22. WHENEVER EXISTING FACILITIES ARE REMOVED, DAMAGED, BROKEN, OR CUT IN THE INSTALLATION OF THE WORK COVERED BY THESE PLANS OR SPECIFICATIONS, SAID FACILITIES SHALL BE REPLACED AT THE CONTRACTOR'S EXPENSE WITH MATERIALS EQUAL TO OR BETTER THAN THE MATERIALS USED IN THE ORIGINAL EXISTING FACILITIES. THE FINISHED PRODUCT SHALL BE SUBJECT TO THE APPROVAL OF THE OWNER, THE ENGINEER, AND THE RESPECTIVE REGULATORY AGENCY.
23. CONTRACTOR SHALL MAINTAIN A NEATLY MARKED SET OF FULL-SIZE RECORD DRAWINGS SHOWING THE FINAL LOCATION AND LAYOUT OF ALL STRUCTURES AND OTHER FACILITIES. RECORD DRAWINGS SHALL REFLECT CHANGE ORDERS, ACCOMMODATIONS, AND ADJUSTMENTS TO ALL IMPROVEMENTS CONSTRUCTED. WHERE NECESSARY, SUPPLEMENTAL DRAWINGS SHALL BE PREPARED AND SUBMITTED BY THE CONTRACTOR. PRIOR TO ACCEPTANCE OF THE PROJECT, THE CONTRACTOR SHALL DELIVER TO THE ENGINEER ONE SET OF NEATLY MARKED RECORD DRAWINGS SHOWING THE INFORMATION REQUIRED ABOVE. RECORD DRAWINGS SHALL BE REVIEWED AND THE COMPLETE RECORD DRAWING SET SHALL BE CURRENT WITH ALL CHANGES AND DEVIATIONS REDLINED AS A PRECONDITION TO THE FINAL PROGRESS PAYMENT APPROVAL AND/OR FINAL ACCEPTANCE.
24. WHERE THE PLANS OR SPECIFICATIONS DESCRIBE PORTIONS OF THE WORK IN GENERAL TERMS BUT NOT IN COMPLETE DETAIL, IT IS UNDERSTOOD THAT ONLY THE BEST GENERAL PRACTICE IS TO PREVAIL AND THAT ONLY MATERIALS AND WORKMANSHIP OF THE FIRST QUALITY ARE TO BE USED.
25. CONTRACTOR SHALL PROVIDE ALL SHORING, BRACING, SLOPING OR OTHER PROVISIONS NECESSARY TO PROTECT WORKMEN FOR ALL AREAS TO BE EXCAVATED TO A DEPTH OF 4' OR MORE. FOR EXCAVATIONS 4 FEET OR MORE IN DEPTH, THE CONTRACTOR SHALL COMPLY WITH INDUSTRIAL COMMISSION OF UTAH SAFETY ORDERS SECTION 68 - EXCAVATIONS AND SECTION 69 - TRENCHES, ALONG WITH ANY LOCAL CODES OR ORDINANCES.
26. ALL EXISTING GATES AND FENCES TO REMAIN UNLESS OTHERWISE NOTED ON PLANS. PROTECT ALL GATES AND FENCES FROM DAMAGE.
27. ALL EXISTING TREES ARE TO REMAIN UNLESS OTHERWISE NOTED ON PLANS. PROTECT ALL TREES FROM DAMAGE.
28. CONTRACTORS ARE RESPONSIBLE FOR ALL OSHA REQUIREMENTS ON THE PROJECT SITE.

DEMOLITION NOTES

1. EXISTING UTILITY INFORMATION SHOWN IS FOR INFORMATIONAL PURPOSES ONLY. IT IS DERIVED FROM RECORD DRAWINGS AND MAY NOT BE LOCATED CORRECTLY AND IS NOT ALL INCLUSIVE. CONTRACTOR SHALL FIELD LOCATE ALL UTILITIES BEFORE BEGINNING DEMOLITION/CONSTRUCTION.
2. THERE MAY BE BURIED UTILITIES WITHIN THE LIMITS OF DISTURBANCE THAT ARE NOT SHOWN ON THE PLANS DUE TO LACK OF MAPPING OR RECORD INFORMATION. CONTRACTOR SHALL NOTIFY ENGINEER WHEN UNEXPECTED UTILITIES ARE DISCOVERED.
3. THE CONTRACTOR SHALL BE FULLY RESPONSIBLE FOR LOCATING AND PROTECTING FROM DAMAGE ALL EXISTING UTILITIES AND IMPROVEMENTS WHETHER OR NOT SHOWN ON THESE PLANS. THE FACILITIES AND IMPROVEMENTS ARE BELIEVED TO BE CORRECTLY SHOWN BUT THE CONTRACTOR IS REQUIRED TO SATISFY HIMSELF AS TO THE COMPLETENESS AND ACCURACY OF THE LOCATIONS. ANY CONTRACTOR PERFORMING WORK ON THIS PROJECT SHALL FAMILIARIZE THEMSELVES WITH THE SITE AND SHALL BE HELD SOLELY RESPONSIBLE FOR ANY DAMAGE TO EXISTING FACILITIES RESULTING DIRECTLY, OR INDIRECTLY, FROM THEIR OPERATIONS, WHETHER OR NOT SAID FACILITIES ARE SHOWN ON THESE PLANS.

TRAFFIC CONTROL AND SAFETY NOTES

1. TRAFFIC CONTROL AND STRIPING TO CONFORM TO CURRENT MANUAL OF UNIFORM TRAFFIC CONTROL DEVICES (M.U.T.C.D.).
2. BARRICADING AND DETOURING SHALL BE IN CONFORMANCE WITH THE REQUIREMENTS OF THE CURRENT MANUAL OF UNIFORM TRAFFIC CONTROL DEVICES (M.U.T.C.D.).
3. NO STREET SHALL BE CLOSED TO TRAFFIC WITHOUT WRITTEN PERMISSION FROM THE GOVERNING AUTHORITY, EXCEPT WHEN DIRECTED BY LAW ENFORCEMENT OR FIRE OFFICIALS.
4. THE CONTRACTOR SHALL MAKE EVERY EFFORT TO PROVIDE FOR SMOOTH TRAFFIC FLOW AND SAFETY. ACCESS SHALL BE MAINTAINED FOR ALL PROPERTIES ADJACENT TO THE WORK.
5. DETOURING OPERATIONS FOR A PERIOD OF SIX CONSECUTIVE CALENDAR DAYS, OR MORE, REQUIRE THE INSTALLATION OF TEMPORARY STREET STRIPING AND REMOVAL OF INTERFERING STRIPING BY SANDBLASTING. THE DETOURING STRIPING PLAN OR CONSTRUCTION TRAFFIC CONTROL PLAN MUST BE SUBMITTED TO THE CITY TRAFFIC ENGINEER FOR REVIEW AND APPROVAL.
6. ALL TRAFFIC CONTROL DEVICES SHALL BE RESTORED TO THEIR ORIGINAL CONDITION AT THE END OF THE WORK TO THE SATISFACTION OF THE CITY TRAFFIC ENGINEER.
7. TRAFFIC CONTROL DEVICES (TCDs) SHALL REMAIN VISIBLE AND OPERATIONAL AT ALL TIMES.
8. ALL PERMANENT TRAFFIC CONTROL DEVICES CALLED FOR HEREON SHALL BE IN PLACE AND IN FINAL POSITION PRIOR TO ALLOWING ANY PUBLIC TRAFFIC ONTO THE PORTIONS OF THE ROAD(S) BEING IMPROVED HEREUNDER, REGARDLESS OF THE STATUS OF COMPLETION OF PAVING OR OTHER OFF-SITE IMPROVEMENTS CALLED FOR BY THESE PLANS.
9. THE CONTRACTOR SHALL PROVIDE BARRICADES, SIGNS, FLASHERS, OTHER EQUIPMENT AND FLAG PERSONS NECESSARY TO INSURE THE SAFETY OF WORKERS AND VISITORS.

UTILITY NOTES

1. ALL CONSTRUCTION AND MATERIALS SHALL BE IN ACCORDANCE WITH THESE CONTRACT DOCUMENTS, CITY AND STATE REQUIREMENTS AND THE MOST RECENT EDITIONS OF THE FOLLOWING: THE INTERNATIONAL PLUMBING CODE (2012 EDITION), UTAH DRINKING WATER REGULATIONS, APWA MANUAL OF STANDARD PLANS AND SPECIFICATIONS (2012 EDITION), IBC (2012 EDITION), ADA AND ADAAG (2010 EDITION). THE CONTRACTOR IS REQUIRED TO ADHERE TO ALL OF THE ABOVE-MENTIONED DOCUMENTS UNLESS OTHERWISE NOTED AND APPROVED BY THE ENGINEER.
2. CONTRACTOR SHALL COORDINATE LOCATION OF NEW "DRY UTILITIES" WITH THE APPROPRIATE UTILITY COMPANY, INCLUDING BUT NOT LIMITED TO: TELEPHONE & INTERNET SERVICE, GAS SERVICE, CABLE, AND POWER.
3. EXISTING UTILITIES HAVE BEEN SHOWN ON THE PLANS USING A COMBINATION OF FIELD MAINTENANCE STAFF AND ON-SITE SURVEY. PRIOR TO COMMENCING ANY WORK, IT SHALL BE THE CONTRACTOR'S RESPONSIBILITY TO HAVE EACH UTILITY COMPANY LOCATE, IN THE FIELD, THEIR MAIN AND SERVICE LINES. THE CONTRACTOR SHALL NOTIFY BLUE STAKES AT 1-800-662-4111 48 HOURS IN ADVANCE OF PERFORMING ANY EXCAVATION WORK. THE CONTRACTOR SHALL RECORD THE BLUE STAKES ORDER NUMBER AND FURNISH ORDER NUMBER TO OWNER AND ENGINEER PRIOR TO ANY EXCAVATION. IT WILL BE THE CONTRACTOR'S SOLE RESPONSIBILITY TO DIRECTLY CONTACT ANY OTHER UTILITY COMPANIES THAT ARE NOT MEMBERS OF BLUE STAKES. IT SHALL BE THE CONTRACTOR'S SOLE RESPONSIBILITY TO PROTECT ALL EXISTING UTILITIES SO THAT NO DAMAGE RESULTS TO THEM DURING THE PERFORMANCE OF THIS CONTRACT. ANY REPAIRS NECESSARY TO DAMAGED UTILITIES SHALL BE PAID FOR BY THE CONTRACTOR. THE CONTRACTOR SHALL BE REQUIRED TO COOPERATE WITH OTHER CONTRACTORS AND UTILITY COMPANIES INSTALLING NEW STRUCTURES, UTILITIES AND SERVICE TO THE PROJECT.
4. CARE SHOULD BE TAKEN IN ALL EXCAVATIONS DUE TO POSSIBLE EXISTENCE OF UNRECORDED UTILITY LINES. EXCAVATION REQUIRED WITHIN PROXIMITY OF EXISTING UTILITY LINES SHALL BE DONE BY HAND. CONTRACTOR SHALL REPAIR ANY DAMAGE TO EXISTING UTILITY LINES OR STRUCTURES INCURRED DURING CONSTRUCTION OPERATIONS AT CONTRACTOR'S EXPENSE.
5. TRENCH BACKFILL MATERIAL AND COMPACTION TESTS ARE TO BE TAKEN PER APWA STANDARD SPECIFICATIONS (2012 EDITION), SECTION 02320 - BACKFILLING TRENCHES, OR AS REQUIRED BY THE GEOTECHNICAL REPORT IF NATIVE MATERIALS ARE USED. NO NATIVE MATERIALS ARE ALLOWED IN THE PIPE ZONE. THE MAXIMUM LIFT FOR BACKFILLING EXCAVATIONS IS 8-INCHES.
6. THE CONTRACTOR IS SOLELY RESPONSIBLE FOR CONFORMING TO LOCAL AND FEDERAL CODES GOVERNING SHORING AND BRACING OF EXCAVATIONS AND TRENCHES, AND FOR THE PROTECTION OF WORKERS.
7. THE CONTRACTOR IS REQUIRED TO KEEP ALL CONSTRUCTION ACTIVITIES WITHIN THE APPROVED PROJECT LIMITS. THIS INCLUDES, BUT IS NOT LIMITED TO VEHICLE AND EQUIPMENT STAGING, MATERIAL STORAGE AND LIMITS OF TRENCH EXCAVATION. IT IS THE CONTRACTOR'S RESPONSIBILITY TO OBTAIN PERMISSION AND/OR EASEMENTS FROM THE APPROPRIATE GOVERNING ENTITY AND/OR INDIVIDUAL PROPERTY OWNER(S) FOR WORK OR STAGING OUTSIDE OF THE PROJECT LIMITS.
8. THE CONTRACTOR IS RESPONSIBLE FOR REPAIRING ANY DAMAGE, CAUSED BY ANY CONDITION INCLUDING SETTLEMENT, TO EXISTING UTILITIES FROM WORK PERFORMED AT AT OR NEAR EXISTING UTILITIES. THE CONTRACTOR SHALL TAKE ALL MEASURES NECESSARY TO PROTECT ALL EXISTING PUBLIC AND PRIVATE ROADWAY AND UTILITY FACILITIES. DAMAGE TO EXISTING FACILITIES CAUSED BY THE CONTRACTOR MUST BE REPAIRED BY THE CONTRACTOR AT HIS/HER EXPENSE TO THE SATISFACTION OF THE OWNER OF SAID FACILITIES.
9. ALL WATER LINE AND SEWER LINE INSTALLATION AND TESTING TO BE IN ACCORDANCE WITH ALL APPLICABLE AWWA, UPWS, ASTM, ANSI, & APWA SPECIFICATIONS.
10. ALL MANHOLES, HYDRANTS, VALVES, CLEANOUT BOXES, CATCH BASINS, METERS, ETC. MUST BE RAISED OR LOWERED TO FINAL GRADE PER APWA (2012 EDITION) STANDARDS AND INSPECTOR REQUIREMENTS. CONCRETE COLLARS MUST BE CONSTRUCTED ON ALL MANHOLES, CLEANOUT BOXES, CATCH BASINS, AND VALVES PER APWA STANDARDS. ALL MANHOLE, CATCH BASIN, OR CLEANOUT BOX CONNECTIONS MUST BE MADE WITH THE PIPE CUT FLUSH WITH THE INSIDE OF THE BOX AND GROUTED OR SEALED.
11. CONTRACTOR SHALL NOT ALLOW ANY GROUNDWATER OR DEBRIS TO ENTER THE NEW OR EXISTING PIPE DURING CONSTRUCTION.
12. CONTRACTOR TO LOOP NEW WATERLINE AROUND GRAVITY UTILITIES IF CONFLICT DOES OCCUR. NOTE ALL CONFLICTS AND LOOPS ON AS-BUILT DRAWINGS.
13. SILT AND DEBRIS ARE TO BE CLEANED OUT OF ALL STORM DRAIN BOXES. CATCH BASINS ARE TO BE MAINTAINED IN A CLEANED CONDITION AS NEEDED UNTIL AFTER THE FINAL BOND RELEASE INSPECTION.
14. CONTRACTOR SHALL CLEAN ASPHALT, TAR OR OTHER ADHESIVES OFF OF ALL MANHOLE LIDS AND INLET GRATES TO ALLOW ACCESS.
15. EACH TRENCH SHALL BE EXCAVATED SO THAT THE PIPE CAN BE LAID TO THE ALIGNMENT AND GRADE AS REQUIRED. THE TRENCH WALL SHALL BE SO BRACED THAT THE WORKMEN MAY WORK SAFELY AND EFFICIENTLY. ALL TRENCHES SHALL BE DRAINED SO THE PIPE LAYING MAY TAKE PLACE IN DEWATERED CONDITIONS.
16. CONTRACTOR SHALL PROVIDE AND MAINTAIN AT ALL TIMES AMPLE MEANS AND DEVICES WITH WHICH TO REMOVE PROMPTLY AND TO PROPERLY DISPOSE OF ALL WATER ENTERING THE TRENCH EXCAVATION.
17. ALL SEWER LINES AND SEWER SERVICES SHALL HAVE A MINIMUM SEPARATION OF 10 FEET, CENTER TO CENTER, FROM THE WATER LINES. IF A 10 FOOT SEPARATION CAN NOT BE MAINTAINED, THE SEWER LINE AND WATER LINE SHALL BE LAID IN SEPARATE TRENCHES AND THERE SHALL BE A MINIMUM 18" VERTICAL SEPARATION BETWEEN THE PIPES.
18. CONTRACTOR SHALL INSTALL THRUST BLOCKING AT ALL WATERLINE ANGLE POINTS AND TEES.
19. ALL UNDERGROUND UTILITIES SHALL BE IN PLACE PRIOR TO INSTALLATION OF CURB, GUTTER, SIDEWALK AND STREET PAVING.
20. CONTRACTOR SHALL INSTALL MAGNETIC LOCATING TAPE CONTINUOUSLY OVER ALL NONMETALLIC PIPE.

GRADING AND DRAINAGE NOTES

1. SITE GRADING SHALL BE PERFORMED IN ACCORDANCE WITH THESE PLANS AND SPECIFICATIONS.
2. CONTRACTOR TO STRIP AND CLEAR THE TOPSOIL, MAJOR ROOTS AND ORGANIC MATERIAL FROM ALL PROPOSED BUILDING AND PAVEMENT AREAS PRIOR TO SITE GRADING. (THE TOPSOIL MAY BE STOCKPILED FOR LATER USE IN LANDSCAPED AREAS.)
3. CONTRACTOR SHALL REMOVE ALL ORGANIC MATERIAL AND OTHER DELETERIOUS MATERIALS PRIOR TO PLACING GRADING FILL OR BASE COURSE. THE AREA SHOULD BE PROOF ROLLED TO IDENTIFY ANY SOFT AREAS. WHERE SOFT AREAS ARE ENCOUNTERED THE CONTRACTOR SHALL REMOVE THE SOIL AND REPLACE WITH COMPACTED FILL.
4. ALL DEBRIS PILES AND BERMS SHOULD BE REMOVED AND HAULED AWAY FROM SITE OR USED AS GENERAL FILL IN LANDSCAPED AREAS.
5. CONTRACTOR TO GRADE PROJECT SITE TO PROVIDE A SMOOTH TRANSITION BETWEEN NEW AND EXISTING ASPHALT, CURB AND GUTTER, AND ADJOINING SITE IMPROVEMENTS.
6. CONTRACTOR SHALL BE RESPONSIBLE FOR DAMAGE AND DEBRIS ON ADJACENT STREETS WHEN EQUIPMENT IS TRAVELING THOSE STREETS.
7. CONTRACTOR SHALL BE FAMILIAR WITH ALL CONDITIONS AND RECOMMENDATIONS OUTLINED IN THE GEOTECHNICAL REPORT AND TAKE ALL NECESSARY PRECAUTIONS AND RECOMMENDED PROCEDURES TO ASSURE SOUND GRADING PRACTICES.
8. CONTRACTOR SHALL TAKE APPROPRIATE GRADING MEASURES TO DIRECT STORM SURFACE RUNOFF TOWARDS CATCH BASINS.
9. THE LOCATIONS OF UNDERGROUND FACILITIES SHOWN ON THESE PLANS ARE BASED ON FIELD SURVEYS AND LOCAL UTILITY COMPANY RECORDS. IT SHALL BE THE CONTRACTORS' FULL RESPONSIBILITY TO CONTACT THE VARIOUS UTILITY COMPANIES TO LOCATE THEIR FACILITIES PRIOR TO PROCEEDING WITH CONSTRUCTION. NO ADDITIONAL COMPENSATION SHALL BE PAID TO THE CONTRACTOR FOR DAMAGE AND REPAIR TO THESE FACILITIES CAUSED BY HIS WORK FORCE.
10. IT SHALL BE THE RESPONSIBILITY OF THE CONTRACTOR TO PERFORM ALL NECESSARY CUTS AND FILLS WITHIN THE LIMITS OF THIS PROJECT AND THE RELATED OFF-SITE WORK, SO AS TO GENERATE THE DESIRED SUBGRADE, FINISH GRADES, AND SLOPES SHOWN.
11. THE CONTRACTOR IS WARNED THAT AN EARTHWORK BALANCE WAS NOT NECESSARILY THE INTENT OF THIS PROJECT. ANY ADDITIONAL MATERIAL REQUIRED OR LEFTOVER MATERIAL FOLLOWING EARTHWORK OPERATIONS BECOMES THE RESPONSIBILITY OF THE CONTRACTOR.
12. THE GRADING CONTRACTOR IS RESPONSIBLE TO COORDINATE WITH THE OWNER TO PROVIDE FOR THE REQUIREMENTS OF THE PROJECT STORM WATER POLLUTION PREVENTION PLAN (SWPPP) AND ASSOCIATED PERMIT. ALL CONTRACTOR ACTIVITIES 1 ACRE OR MORE ARE REQUIRED TO PROVIDE A STORM WATER POLLUTION PREVENTION PLAN.
13. ALL CUT AND FILL SLOPES SHALL BE PROTECTED UNTIL EFFECTIVE EROSION CONTROL HAS BEEN ESTABLISHED.
14. THE USE OF POTABLE WATER WITHOUT A SPECIAL PERMIT FOR BUILDING OR CONSTRUCTION PURPOSES INCLUDING CONSOLIDATION OF BACKFILL OR DUST CONTROL IS PROHIBITED. THE CONTRACTOR SHALL OBTAIN ALL NECESSARY PERMITS FOR CONSTRUCTION WATER FROM THE GOVERNING AGENCY.

LEGEND

SECTION CORNER	EXISTING EDGE OF ASPHALT
EXISTING MONUMENT	PROPOSED EDGE OF ASPHALT
PROPOSED MONUMENT	EXISTING STRIPING
EXISTING REBAR AND CAP	PROPOSED STRIPING
SET ENSIGN REBAR AND CAP	EXISTING FENCE
EXISTING WATER METER	PROPOSED FENCE
PROPOSED WATER METER	EXISTING FLOW LINE
EXISTING WATER MANHOLE	PROPOSED FLOW LINE
PROPOSED WATER MANHOLE	GRADE BREAK
EXISTING WATER BOX	EXISTING STORM DRAIN LINE
EXISTING WATER VALVE	PROPOSED STORM DRAIN LINE
PROPOSED WATER VALVE	ROOF DRAIN LINE
EXISTING FIRE HYDRANT	CATCHMENTS
PROPOSED FIRE HYDRANT	HIGHWATER LINE
PROPOSED FIRE DEPARTMENT CONNECTION	EXISTING SANITARY SEWER
EXISTING SECONDARY WATER VALVE	PROPOSED SANITARY SEWER LINE
PROPOSED SECONDARY WATER VALVE	PROPOSED SAN. SWR. SERVICE LINE
EXISTING IRRIGATION BOX	EXISTING LAND DRAIN LINE
EXISTING IRRIGATION VALVE	PROPOSED LAND DRAIN LINE
PROPOSED IRRIGATION VALVE	PROPOSED LAND DRAIN SERVICE LINE
EXISTING SANITARY SEWER MANHOLE	EXISTING CULINARY WATER LINE
PROPOSED SANITARY SEWER MANHOLE	PROPOSED CULINARY WATER LINE
EXISTING SANITARY CLEAN OUT	PROPOSED CULINARY WATER SERVICE LINE
EXISTING STORM DRAIN CLEAN OUT BOX	EXISTING SECONDARY WATER LINE
PROPOSED STORM DRAIN CLEAN OUT BOX	PROPOSED SECONDARY WATER LINE
EXISTING STORM DRAIN INLET BOX	PROPOSED SEC. WATER SERVICE LINE
EXISTING STORM DRAIN CATCH BASIN	EXISTING IRRIGATION LINE
PROPOSED STORM DRAIN CATCH BASIN	PROPOSED IRRIGATION LINE
EXISTING STORM DRAIN COMBO BOX	EXISTING OVERHEAD POWER LINE
PROPOSED STORM DRAIN COMBO BOX	EXISTING ELECTRICAL LINE
EXISTING STORM DRAIN CLEAN OUT	EXISTING GAS LINE
EXISTING STORM DRAIN CULVERT	EXISTING TELEPHONE LINE
PROPOSED STORM DRAIN CULVERT	ACCESSIBLE ROUTE
TEMPORARY SAG INLET PROTECTION	SAW CUT LINE
TEMPORARY IN-LINE INLET PROTECTION	STRAW WATTLE
ROOF DRAIN	TEMPORARY BERM
EXISTING ELECTRICAL MANHOLE	TEMPORARY SILT FENCE
EXISTING ELECTRICAL BOX	LIMITS OF DISTURBANCE
EXISTING TRANSFORMER	EXISTING WALL
EXISTING UTILITY POLE	PROPOSED WALL
EXISTING LIGHT	EXISTING CONTOURS
PROPOSED LIGHT	PROPOSED CONTOURS
EXISTING GAS METER	BUILDABLE AREA WITHIN SETBACKS
EXISTING GAS MANHOLE	PUBLIC DRAINAGE EASEMENT
EXISTING GAS VALVE	EXISTING ASPHALT TO BE REMOVED
EXISTING TELEPHONE MANHOLE	PROPOSED ASPHALT
EXISTING TELEPHONE BOX	EXISTING CURB AND GUTTER
EXISTING TRAFFIC SIGNAL BOX	PROPOSED CURB AND GUTTER
EXISTING CABLE BOX	PROPOSED REVERSE PAN CURB AND GUTTER
EXISTING BOLLARD	TRANSITION TO REVERSE PAN CURB
PROPOSED BOLLARD	CONCRETE TO BE REMOVED
EXISTING SIGN	EXISTING CONCRETE
PROPOSED SIGN	PROPOSED CONCRETE
EXISTING SPOT ELEVATION	BUILDING TO BE REMOVED
PROPOSED SPOT ELEVATION	EXISTING BUILDING
EXISTING FLOW DIRECTION	PROPOSED BUILDING
EXISTING TREE	
DENSE VEGETATION	

NOTE: MAY CONTAIN SYMBOLS THAT ARE NOT USED IN THIS PLAN SET.

ABBREVIATIONS

APWA	AMERICAN PUBLIC WORKS ASSOCIATION	NIC	NOT IN CONTRACT
AR	ACCESSIBLE ROUTE	NO	NUMBER
ASTM	AMERICAN SOCIETY FOR TESTING AND MATERIALS	OC	ON CENTER
AWWA	AMERICAN WATER WORKS ASSOCIATION	OCEW	ON CENTER EACH WAY
BOS	BOTTOM OF STEP	OHP	OVERHEAD POWER
BVC	BEGIN VERTICAL CURVE	PC	POINT OF CURVATURE OR PRESSURE CLASS
C	CURVE	PCC	POINT OF COMPOUND CURVATURE
CB	CATCH BASIN	PI	POINT OF INTERSECTION
CF	CURB FACE	PIV	POST INDICATOR VALVE
CL	CENTER LINE	PL	PROPERTY LINE
CO	CLEAN OUT	PRC	POINT OF REVERSE CURVATURE
COMM	COMMUNICATION	PRO	PROPOSED
CONC	CONCRETE	PT	POINT OF TANGENCY
CONT	CONTINUOUS	PVC	POINT OF VERTICAL CURVATURE
DIA	DIAMETER	PVI	POINT OF VERTICAL INTERSECTION
DIP	DUCTILE IRON PIPE	PVT	POINT OF VERTICAL TANGENCY
ELEC	ELECTRICAL	R	RADIUS
ELEV	ELEVATION	RD	ROOF DRAIN
EOA	EDGE OF ASPHALT	ROW	RIGHT OF WAY
EVC	END OF VERTICAL CURVE	S	SLOPE
EW	EACH WAY	SAN SWR	SANITARY SEWER
EXIST	EXISTING	SD	STORM DRAIN
FF	FINISH FLOOR	SEC	SECONDARY
FG	FINISH GRADE	SS	SANITARY SEWER
FH	FIRE HYDRANT	STA	STATION
FL	FLOW LINE OR FLANGE	SW	SIDEWALK
GB	GRADE BREAK	SWL	SECONDARY WATER LINE
GF	GARAGE FLOOR	TBC	TOP BACK OF CURB
GV	GATE VALVE	TOG	TOP OF GRATE
HC	HANDICAP	TOA	TOP OF ASPHALT
HP	HIGH POINT	TOC	TOP OF CONCRETE
IRR	IRRIGATION	TOF	TOP OF FOUNDATION
K	RATE OF VERTICAL CURVATURE	TOW	TOP OF WALL
LD	LAND DRAIN	TOS	TOP OF STEP
LF	LINEAR FEET	TYP	TYPICAL
LP	LOW POINT	VC	VERTICAL CURVE
MH	MANHOLE	WIV	WALL INDICATOR VALVE
MJ	MECHANICAL JOINT	WL	WATER LINE
NG	NATURAL GROUND		

NOTE: MAY CONTAIN ABBREVIATIONS THAT ARE NOT USED IN THIS PLAN SET.

1

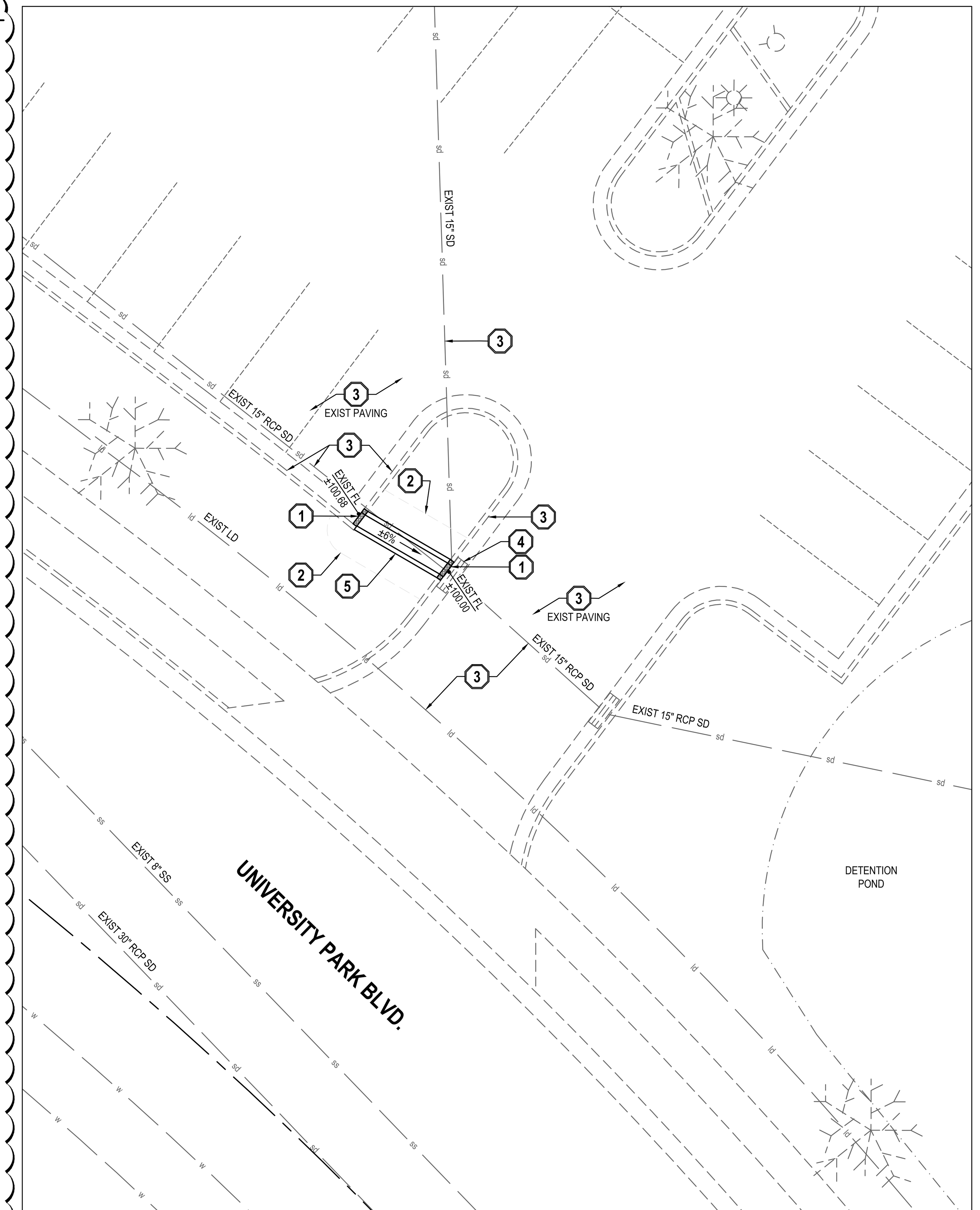

1 / C-100 DRAINAGE IMPROVEMENT PLAN
1" = 10'

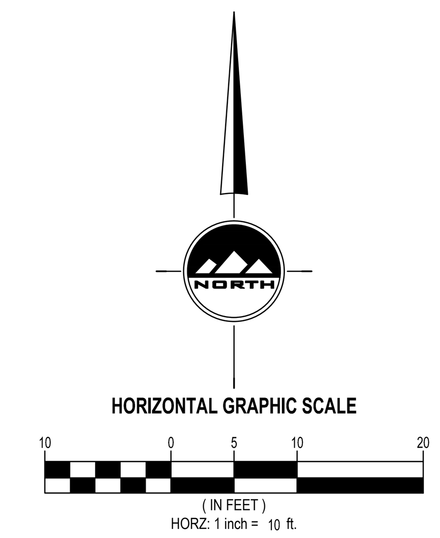

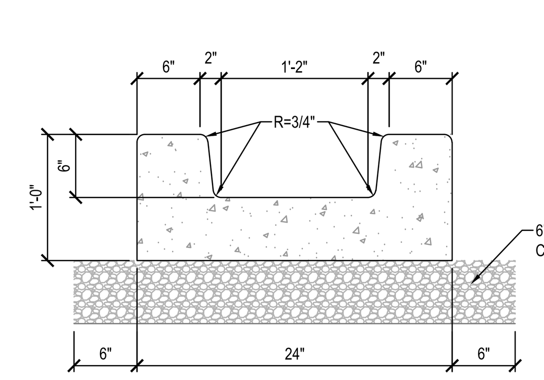

NOTE:

1. INSTALL 2" CONTRACTION JOINTS AT 10' MAXIMUM SPACING.
2. ALL STRUCTURAL FILL TO BE COMPACTED TO A MINIMUM OF 95% OF THE MAXIMUM DRY DENSITY AS DETERMINED BY THE AASHTO T-180 (D-1557) METHOD OF COMPACTION. LIFTS SHOULD NOT EXCEED 8" IN LOOSE THICKNESS.
3. REMOVE SURFACE VEGETATION AND OTHER DELETERIOUS MATERIALS OVER THE ENTIRE SITE IN PREPARATION OF PROPOSED IMPROVEMENTS.

A / C-100 CONCRETE WATERWAY SECTION
1" = 1'-0"

GENERAL SHEET NOTES

1. ALL WORK TO COMPLY WITH THE GOVERNING AGENCY'S STANDARDS AND SPECIFICATIONS.
2. EXISTING UNDERGROUND UTILITIES AND IMPROVEMENTS ARE SHOWN IN THEIR APPROXIMATE LOCATIONS BASED UPON RECORD INFORMATION AVAILABLE AT THE TIME OF PREPARATION OF THESE PLANS. LOCATIONS MAY NOT HAVE BEEN VERIFIED IN THE FIELD AND NO GUARANTEE IS MADE AS TO THE ACCURACY OR COMPLETENESS OF THE INFORMATION SHOWN. IT SHALL BE THE RESPONSIBILITY OF THE CONTRACTOR TO DETERMINE THE EXISTENCE AND LOCATION OF THE UTILITIES SHOWN ON THESE PLANS OR INDICATED IN THE FIELD BY LOCATING SERVICES. ANY ADDITIONAL COSTS INCURRED AS A RESULT OF THE CONTRACTOR'S FAILURE TO VERIFY THE LOCATIONS OF EXISTING UTILITIES PRIOR TO THE BEGINNING OF CONSTRUCTION IN THEIR VICINITY SHALL BE BORNE BY THE CONTRACTOR AND ASSUMED INCLUDED IN THE CONTRACT. THE CONTRACTOR IS TO VERIFY ALL CONNECTION POINTS WITH THE EXISTING UTILITIES. THE CONTRACTOR IS RESPONSIBLE FOR ANY DAMAGE CAUSED TO THE EXISTING UTILITIES AND UTILITY STRUCTURES THAT ARE TO REMAIN. IF CONFLICTS WITH EXISTING UTILITIES OCCUR, THE CONTRACTOR SHALL NOTIFY THE ENGINEER PRIOR TO CONSTRUCTION TO DETERMINE IF ANY FIELD ADJUSTMENTS SHOULD BE MADE.
3. ALL SURFACE IMPROVEMENTS DISTURBED BY CONSTRUCTION SHALL BE RESTORED OR REPLACED, INCLUDING TREES AND DECORATIVE SHRUBS, SOD, FENCES, WALLS AND STRUCTURES, WHETHER OR NOT THEY ARE SPECIFICALLY SHOWN ON THE CONTRACT DOCUMENTS.
4. ALL CONSTRUCTION SIGNAGE, BARRICADES, TRAFFIC CONTROL DEVICES, ETC. SHALL CONFORM TO THE LATEST EDITION OF THE M.U.T.C.D. THE CONTRACTOR WILL MAINTAIN SUCH SO THAT THEY ARE PROPERLY PLACED AND VISIBLE AT ALL TIMES.
5. SIDEWALKS AND CURBS DESIGNATED TO BE DEMOLISHED SHALL BE DEMOLISHED TO THE NEAREST EXPANSION JOINT, MATCHING THESE PLANS AS CLOSELY AS POSSIBLE.
6. THE CONTRACTOR IS TO PROTECT AND PRESERVE ALL EXISTING IMPROVEMENTS, UTILITIES, AND SIGNS, ETC. UNLESS OTHERWISE NOTED ON THESE PLANS.
7. NOTIFY ENGINEER OF ANY DISCREPANCIES IN DESIGN OR STAKING BEFORE PLACING CONCRETE OR ASPHALT OR STORM DRAIN STRUCTURES.
8. ALL STORM DRAIN INFRASTRUCTURE TO BE INSTALLED PER GOVERNING AGENCY OR APWA STANDARD PLANS AND SPECIFICATIONS.
9. THE CONTRACTOR SHALL ADJUST TO GRADE ALL EXISTING UTILITIES AS NEEDED PER LOCAL GOVERNING AGENCY'S STANDARDS AND SPECIFICATIONS.

SCOPE OF WORK:

PROVIDE, INSTALL AND/OR CONSTRUCT THE FOLLOWING PER THE SPECIFICATIONS GIVEN OR REFERENCED, THE DETAILS NOTED, AND/OR AS SHOWN ON THE CONSTRUCTION DRAWINGS:

1. SAWCUT EXISTING BACK OF CURB TO MATCH PROFILE OF PROPOSED CONCRETE WATERWAY. REMOVE AND PROPERLY DISPOSE OF CONCRETE WASTE.
2. REMOVE EXISTING LANDSCAPING IN THIS AREA AND RESTORE TO ORIGINAL CONDITION AFTER INSTALLATION OF WATERWAY. RETROFIT AND REPAIR IRRIGATION SYSTEM AS NEEDED.
3. PROTECT AND PRESERVE ALL EXISTING IMPROVEMENTS, UTILITIES, STRUCTURES, PAVEMENT, SIGNS, ETC. (TYPICAL UNLESS OTHERWISE NOTED).
4. CLEAN AND REMOVE ALL DEBRIS FROM EXISTING CATCH BASIN AT PROJECT COMPLETION.
5. ±11 L.F., CONCRETE WATERWAY PER DETAIL A/C-100. MATCH FLOW-LINES OF EXISTING GUTTER AT EACH END. INSTALL JOINT SEALANT TYPE HAS1 (OR EQUIVALENT) AT EACH END BETWEEN NEW WATERWAY AND EXISTING CURBING.

CALL BLUESTAKES @ 811 AT LEAST 48 HOURS PRIOR TO THE COMMENCEMENT OF ANY CONSTRUCTION.

811 Know what's below. Call before you dig.

GSBS ARCHITECTS
375 WEST 200 SOUTH
SALT LAKE CITY, UT 84101
P 801.521.8600
F 801.521.7913
www.gsbsarchitects.com

REVISIONS:

1	3/27/2015	ADDENDUM #1

ENSIGN
SALT LAKE CITY
45 W. 10000 S., Suite 500
Sandy, Utah 84070
Phone: 801.255.0529
Fax: 801.255.4449
LAYTON
Phone: 801.547.1100
TOOELE
Phone: 435.843.3590
CEDAR CITY
Phone: 435.865.1453
RICHFIELD
Phone: 435.896.2983
COLORADO SPRINGS
Phone: 719.476.0119
WWW.ENSIGNUTAH.COM

LICENSED PROFESSIONAL ENGINEER
Koby J. Morgan
No. 5567061
3-25-15
STATE OF UTAH

WSU DAVIS CAMPUS D13 REMODEL

875 SOUTH UNIVERSITY PARK BLVD.
CLEARFIELD, UT 84041

DFCM

4110 STATE OFFICE
BUILDING 450 NORTH
STATE STREET SALT
LAKE CITY, UT 84114

OWNER PROJECT NO.:	14297810
GSBS PROJECT NO.:	2014.095.00
ISSUED DATE:	03/09/2015

DRAINAGE IMPROVEMENT PLAN

C-100

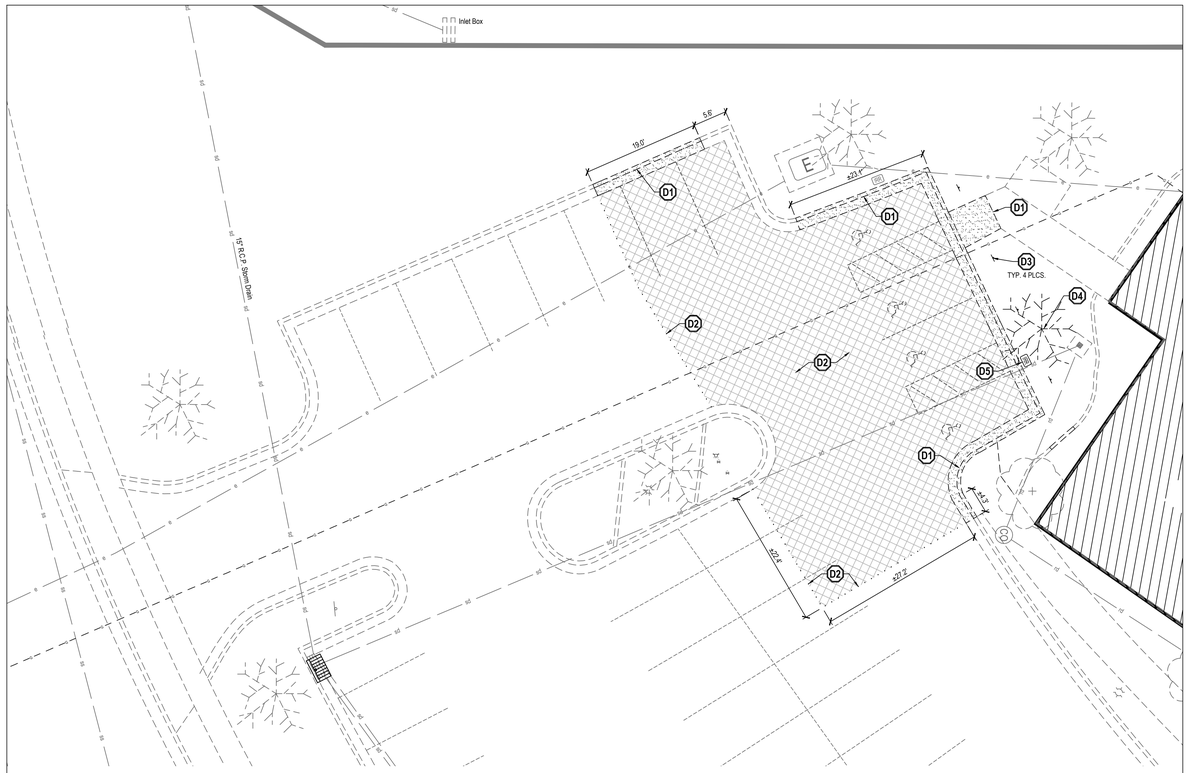

1 C-200 ADA PARKING – DEMOLITION PLAN
1" = 10'

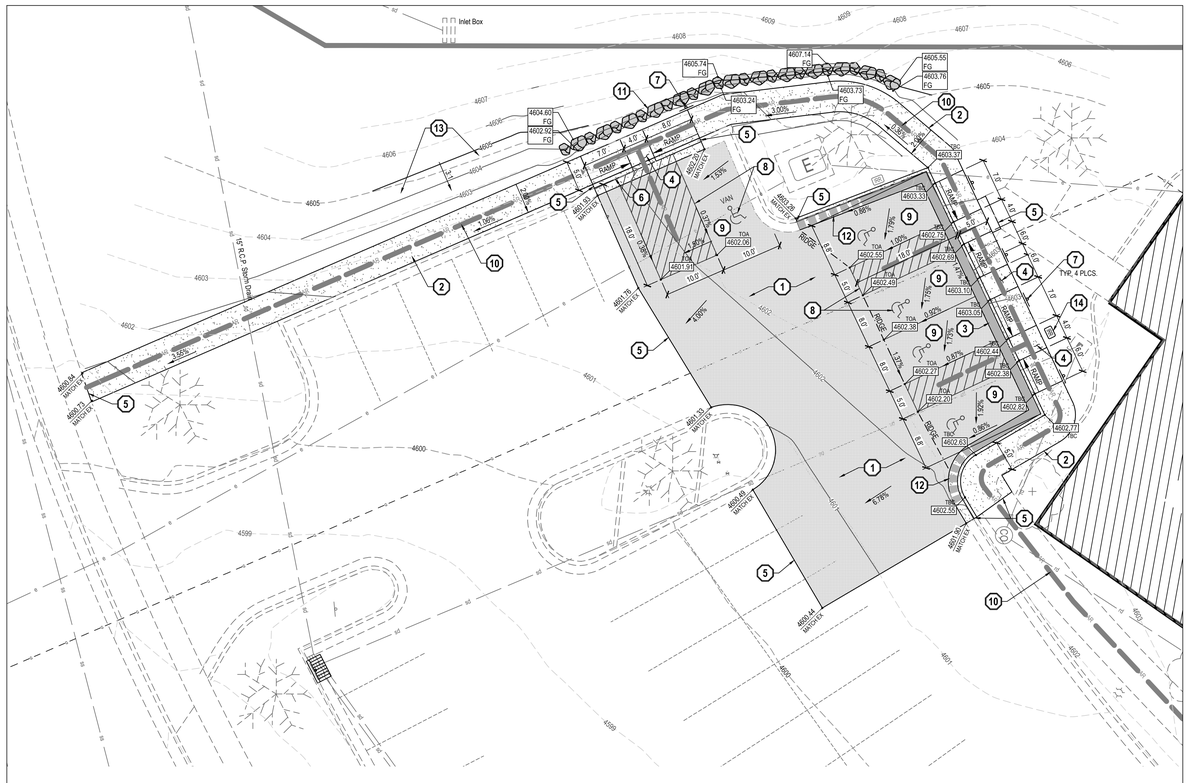

2 C-200 ADA PARKING – SITE AND GRADING PLAN
1" = 10'

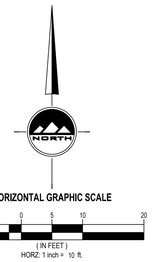

GENERAL NOTES

1. ALL WORK TO COMPLY WITH THE GOVERNING AGENCY'S STANDARDS AND SPECIFICATIONS. SEE SHEET C-100.
2. EXISTING UNDERGROUND UTILITIES AND IMPROVEMENTS ARE SHOWN IN THEIR APPROXIMATE LOCATIONS BASED UPON RECORD INFORMATION AVAILABLE AT THE TIME OF PREPARATION OF THESE PLANS. LOCATIONS MAY NOT HAVE BEEN VERIFIED IN THE FIELD AND NO GUARANTEE IS MADE AS TO THE ACCURACY OR COMPLETENESS OF THE INFORMATION SHOWN. IT SHALL BE THE RESPONSIBILITY OF THE CONTRACTOR TO DETERMINE THE EXISTENCE AND LOCATION OF THE UTILITIES SHOWN ON THESE PLANS OR INDICATED IN THE FIELD BY LOCATING SERVICES. ANY ADDITIONAL COSTS INCURRED AS A RESULT OF THE CONTRACTOR'S FAILURE TO VERIFY THE LOCATIONS OF EXISTING UTILITIES PRIOR TO THE BEGINNING OF CONSTRUCTION IN THEIR VICINITY SHALL BE BORNE BY THE CONTRACTOR AND ASSUMED INCLUDED IN THE CONTRACT. THE CONTRACTOR IS TO VERIFY ALL CONNECTION POINTS WITH THE EXISTING UTILITIES. THE CONTRACTOR IS RESPONSIBLE FOR ANY DAMAGE CAUSED TO THE EXISTING UTILITIES AND UTILITY STRUCTURES THAT ARE TO REMAIN. IF CONFLICTS WITH EXISTING UTILITIES OCCUR, THE CONTRACTOR SHALL NOTIFY THE ENGINEER PRIOR TO CONSTRUCTION TO DETERMINE IF ANY FIELD ADJUSTMENTS SHOULD BE MADE.
3. ALL SURFACE IMPROVEMENTS DISTURBED BY CONSTRUCTION SHALL BE RESTORED OR REPLACED, INCLUDING TREES AND DECORATIVE SHRUBS, SOD, FENCES, WALLS AND STRUCTURES, WHETHER OR NOT THEY ARE SPECIFICALLY SHOWN ON THE CONTRACT DOCUMENTS.
4. ALL CONSTRUCTION SIGNAGE, BARRICADES, TRAFFIC CONTROL DEVICES, ETC. SHALL CONFORM TO THE LATEST EDITION OF THE M.U.T.C.D. THE CONTRACTOR WILL MAINTAIN SUCH SO THAT THEY ARE PROPERLY PLACED AND VISIBLE AT ALL TIMES.
5. SIDEWALKS AND CURBS DESIGNATED TO BE DEMOLISHED SHALL BE DEMOLISHED TO THE NEAREST EXPANSION JOINT, MATCHING THESE PLANS AS CLOSELY AS POSSIBLE.
6. THE CONTRACTOR IS TO PROTECT AND PRESERVE ALL EXISTING IMPROVEMENTS, UTILITIES, AND SIGNS, ETC. UNLESS OTHERWISE NOTED ON THESE PLANS.
7. NOTIFY ENGINEER OF ANY DISCREPANCIES IN DESIGN OR STAKING BEFORE PLACING CONCRETE OR ASPHALT OR STORM DRAIN STRUCTURES.
8. ALL STORM DRAIN INFRASTRUCTURE TO BE INSTALLED PER GOVERNING AGENCY OR APWA STANDARD PLANS AND SPECIFICATIONS.
9. THE CONTRACTOR SHALL ADJUST TO GRADE ALL EXISTING UTILITIES AS NEEDED PER LOCAL GOVERNING AGENCY'S STANDARDS AND SPECIFICATIONS.
10. ALL IMPROVEMENTS MUST COMPLY WITH ADA STANDARDS AND RECOMMENDATIONS.

SCOPE OF WORK:

PROVIDE, INSTALL AND/OR CONSTRUCT THE FOLLOWING PER THE SPECIFICATIONS GIVEN OR REFERENCED, THE DETAILS NOTED, AND/OR AS SHOWN ON THE CONSTRUCTION DRAWINGS:

DEMOLITION KEYNOTES

- D1 SAWCUT EXISTING CONCRETE SIDEWALK AND CURB AND GUTTER AT NEXT NEAREST JOINT. REMOVE AND PROPERLY DISPOSE OF EXISTING SIDEWALK AND CURBING.
- D2 SAWCUT EXISTING ASPHALT PAVING TO FORM CLEAN EDGE. REMOVE AND PROPERLY DISPOSE OF EXISTING ASPHALT PAVEMENT.
- D3 REMOVE EXISTING ADA PARKING STALL SIGNS, STORE AND RE-INSTALL.
- D4 REMOVE AND PROPERLY DISPOSE OF EXISTING TREE.
- D5 RELOCATE EXISTING IRRIGATION VALVE BOX, SEE SITE AND GRADING PLAN BELOW.

IMPROVEMENT KEYNOTES

- 1 ASPHALT PAVEMENT TO MATCH EXISTING, MINIMUM 3" ASPHALT (DM-1/2") OVER 8" BASE COURSE.
- 2 CONCRETE SIDEWALK PER APWA PLAN 231. SEE SHEET C-300.
- 3 24" REVERSE PAN CURB AND GUTTER PER DETAIL 1/C-300.
- 4 MIDBLOCK CURB CUT ASSEMBLY PER APWA PLAN 236, EXAMPLE 5. NO DETECTABLE WARNING SURFACE REQUIRED. SEE SHEET C-300
- 5 MATCH EXISTING GRADE AT TIE-IN LOCATION.
- 6 CURB AND GUTTER TO MATCH EXISTING. WARP PAN TO MATCH CURB CUT ASSEMBLY SLOPE AND GRADE REQUIREMENTS.
- 7 "HANDICAP PARKING" SIGN PER DETAIL 2/C-300.
- 8 PAVEMENT STRIPING WHERE SHOWN ON PLANS. SEE DETAIL 3/C-300 FOR HANDICAP PARKING STALL SYMBOL.
- 9 FINISH GRADE SLOPES IN HANDICAP PARKING SPACES SHALL NOT EXCEED 2.00% IN ANY DIRECTION. CONTRACTOR TO CONFIRM SLOPES AFTER SETTING FORMS AND PRIOR TO INSTALLING PAVEMENT AND ADJUST FORMS AS NECESSARY TO SLOPES LESS THAN 2.00%. NOTIFY THE ENGINEER IF ANY DISCREPANCIES EXIST PRIOR TO INSTALLING PAVEMENT.
- 10 DESIGNATED ACCESSIBLE ROUTE. ENSURE GRADES DO NOT EXCEED 5.0% FOR RUNNING SLOPES (1:12 OR 8.33% FOR RAMPS) AND 2.0% FOR CROSS SLOPES.
- 11 ROCK WALL PER DETAIL 4/C-300, OR APPROVED SEGMENTED WALL SYSTEM. CONTRACTOR TO PROVIDE SHOP DRAWINGS OF WALL SYSTEM TO DESIGN ENGINEER FOR REVIEW AND APPROVAL PRIOR TO INSTALLATION.
- 12 TRANSITION FROM REVERSE PAN CURB AND GUTTER TO STANDARD CURB AND GUTTER.
- 13 RESTORE LANDSCAPING AND IRRIGATION SYSTEM TO PRE-CONSTRUCTION CONDITIONS OR AS DIRECTED BY OWNER.
- 14 RELOCATE IRRIGATION VALVES AND BOX TO THIS LOCATION. REPLACE EXISTING PLASTIC BOX IF DAMAGED. IRRIGATION PIPING AND SYSTEM TO BE MODIFIED AS REQUIRED TO RESTORE TO PRE-CONSTRUCTION CONDITIONS.

811 Know what's below. Call before you dig.

CALL BLUESTAKES @ 811 AT LEAST 48 HOURS PRIOR TO THE COMMENCEMENT OF ANY CONSTRUCTION.

GSBS ARCHITECTS

375 WEST 200 SOUTH
SALT LAKE CITY, UT 84101

P 801.521.8600
F 801.521.7913

www.gsbsarchitects.com

REVISIONS:

1	3/27/2015	ADDENDUM #1, NEW SHEET

ENSIGN

SALT LAKE CITY
45 W. 10000 S., Suite 500
Sandy, Utah 84070
Phone: 801.255.0529
Fax: 801.255.4449

LAYTON
Phone: 801.547.1100

TOOELE
Phone: 435.843.3590

CEDAR CITY
Phone: 435.865.1453

RICHFIELD
Phone: 435.896.2983

COLORADO SPRINGS
Phone: 719.476.0119

WWW.ENSIGNUTAH.COM

LICENSED PROFESSIONAL ENGINEER
Morgan
No. 5567061
3-25-15
STATE OF UTAH

WSU DAVIS CAMPUS D13 REMODEL

875 SOUTH UNIVERSITY PARK BLVD.
CLEARFIELD, UT 84041

DFCM

4110 STATE OFFICE BUILDING 450 NORTH STATE STREET SALT LAKE CITY, UT 84114

OWNER PROJECT NO.:	14297810
GSBS PROJECT NO.:	2014.095.00
ISSUED DATE:	03/09/2015

HANDICAP PARKING AREA DEMOLITION PLAN, SITE AND GRADING PLAN

C-200

GSBS ARCHITECTS

375 WEST 200 SOUTH
SALT LAKE CITY, UT 84101

P 801.521.8600
F 801.521.7913

www.gsbsarchitects.com

REVISIONS:

A	3/27/2015	ADDENDUM #1, NEW SHEET

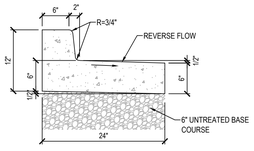

NOTE:

1. CONSTRUCT PER NOTES AND SPECIFICATIONS ASSOCIATED WITH APWA STANDARD PLAN NO. 205.

1 24" REVERSE PAN CURB AND GUTTER

SCALE: 1" = 1'-0"

NOTES:

1. SIGNS TO BE CENTERED AT FRONT OF PARKING SPACE.
2. HANDICAP PARKING LOGO, COLOR, HEIGHT, OF POLE, DIMENSIONS OF SIGN TO BE INSTALLED PER GOVERNMENTAL REQUIREMENTS.

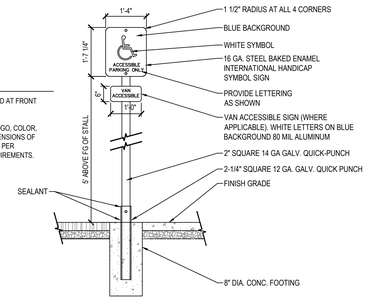

2 ACCESIBLE PARKING SIGN

SCALE: 1/2" = 1'-0"

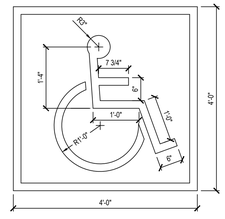

NOTES:

1. INTERNATIONAL PICTOGRAPH SYMBOL WHITE FED. STD. 17875.
2. 4"-BORDER-WHITE FED. STD. 17875.
3. BACKGROUND-BLUE FED. STD. 15180.

3 HANDICAP STALL PAVEMENT MARKING

SCALE: 3/4" = 1'-0"

ROCK WALL NOTES:

1. THE RESPONSIBILITY OF STANDARD ROCK WALLS REMAINS WITH THE ROCK WALL BUILDER.
2. ANY MODIFICATIONS TO THE WALL OR THE HILLSIDE ABOVE OR BELOW THE WALL POST CONSTRUCTION WILL REMOVE THE RESPONSIBILITY FROM THE DESIGN ENGINEER.
3. ALL FILL TO BE COMPACTED TO 95% MAX DRY DENSITY PER ASTM D-1557 PLACED IN 8" LIFTS.
4. CONTINUOUS JOINTS OR PLANES ARE NOT ALLOWED.
5. IT IS THE OWNER'S RESPONSIBILITY TO INTERCEPT SURFACE DRAINAGE FROM ABOVE THE ROCK WALL AND DIRECT IT AWAY FROM THE WALL TO A PERMANENT DISCHARGE POINT WELL AWAY FROM THE TOE OF THE ROCK WALL.
6. ALL ROCK SHALL BE ANGULAR AND QUARRIED USING NON-EXPLOSIVE METHODS.
7. MINIMUM ROCK SIZE IS 1.5' DIAMETER.
8. PLACE ROCKS SO THAT THEY INTERLOCK WITH EACH OTHER WITH UPPER ROCK OFFSET SO THAT IT RESTS ON 2 LOWER ROCKS.
9. SLOPES NOT PROTECTED WITH ROCKS OR AREAS OF SOIL BETWEEN THE ROCKS SHOULD BE PROTECTED FROM EROSION BY REVEGETATION OR OTHER METHODS.
10. MAINTENANCE OF ROCK-PROTECTED SLOPES WILL BE REQUIRED AS THE ROCKS SETTLE AND MOVE OVER TIME. LOCALIZED AREAS OF ROCK-PROTECTED SLOPE MAY NEED ADJUSTMENTS TO IMPROVE ROCK INTERLOCKING OVER TIME. ADEQUATE BACKFILL OR ROCK TO ROCK CONTACT SHOULD BE MAINTAINED TO PREVENT SIGNIFICANT MOVEMENT OF THE TOP ROW OF ROCKS.
11. CARE SHOULD BE TAKEN NOT TO OVER WATER THE SOIL LOCATED ABOVE AND BEHIND THE ROCK-PROTECTED SLOPES. OVER WATERING WILL LIKELY RESULT IN SOIL ERODING THROUGH THE JOINTS BETWEEN THE ROCKS.
12. GOOD SURFACE DRAINAGE SHOULD BE PROVIDED UPSLOPE OF THE ROCK-PROTECTED SLOPES TO DIRECT RUNOFF AWAY FROM THE ROCK PROTECTED SLOPES.

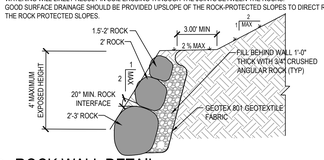

4 ROCK WALL DETAIL

SCALE: 1" = 1'-0"

ENSIGN

SALT LAKE CITY
45 W. 10000 S., Suite 500
Sandy, Utah 84070
Phone: 801.255.0529
Fax: 801.255.4449

LAYTON
Phone: 801.547.1100

TOOELE
Phone: 435.843.3590

CEDAR CITY
Phone: 435.865.1453

RICHFIELD
Phone: 435.896.2983

COLORADO SPRINGS
Phone: 719.476.0119

WWW.ENSIGNUTAH.COM

Sidewalk

1. **GENERAL**
   A. Variance from specified dimensions and slopes must be acceptable to the ENGINEER. System configuration may be changed at ENGINEER's discretion.
   B. Additional requirements are specified in APWA Section 32 16 13.
2. **PRODUCTS**
   A. Base Course: Untreated base course, APWA Section 32 11 23. Do not use gravel as a base course without ENGINEER's permission.
   B. Expansion Joint Filler: 1/2-inch thick type F1 full depth, APWA Section 32 13 73.
   C. Concrete: Class 4000, APWA Section 03 30 04. If necessary, provide concrete that achieves design strength in less than 7 days. Use caution; however, as concrete crazing (spider cracks) may develop if air temperature exceeds 90 degrees F.
   D. Concrete Curing Agent: Clear membrane forming compound with fugitive dye (Type ID Class A), APWA Section 03 39 00.
3. **EXECUTION**
   A. Base Course Placement: APWA Section 32 05 10. Maximum lift thickness before compaction is 8-inches when using riding equipment or 6-inches when using hand held equipment. Compaction is 95 percent or greater relative to a modified proctor density, APWA Section 31 23 26.
   B. Concrete Placement: APWA Section 03 30 10.
      1) Install expansion joints vertical, full depth, with top of filler set flush with concrete surface.
      2) Install contraction joints vertical, 1/8-inch wide or 1/4 slab thickness if the slab is greater than 8-inches thick. Maximum length to width ratio for non-square panels is 1.5 to 1. Maximum panel length (in feet) is 1.5 times the slab thickness (in inches).
      3) Provide 1/2-inch radius edges. Apply a broom finish. Apply a curing agent.

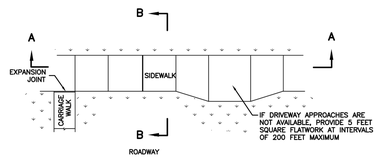

PLAN

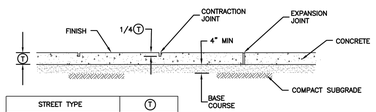

STREET TYPE	T
RESIDENTIAL (WITH PARK STRIP)	4"
RESIDENTIAL (NO PARK STRIP)	6"
OTHER	
REPLACING EXISTING SIDEWALK	MATCH EXISTING (4" MIN.)

SEE DRIVEWAY APPROACH PLANS FOR SIDEWALK THICKNESS AT DRIVEWAYS

SECTION A–A

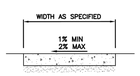

SECTION B–B

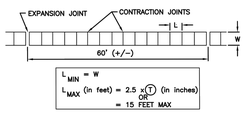

SIDEWALK JOINT DETAIL

Midblock curb cut assembly

1. **GENERAL**
   A. Where existing elements or spaces are altered to receive an assembly; slopes and dimensions shall comply with slopes and dimensions shown on the drawing, or to the maximum extent feasible permitted by the ENGINEER. Final configuration of the assembly may be different than shown.
   B. Installation of a curb wall is ENGINEER's choice.
   C. Definitions and supplemental requirements are specified in APWA Section 32 16 14.
2. **PRODUCTS**
   A. Base Course: Untreated base course, APWA Section 32 11 23. Do not use gravel as a base course without ENGINEER's permission.
   B. Expansion Joint Filler: 1/2-inch thick type F1 full depth, APWA Section 32 13 73.
   C. Detectable Warning Surface: Paver, ribbed composite panel, or tile. Provide a color that contrasts with adjacent walking surface, either light-on-dark or dark-on-light. ENGINEER to select type and color unless indicated elsewhere.
   D. Concrete: Class 4000, APWA Section 03 30 04.
   E. Concrete Curing Agent: Clear membrane forming compound with fugitive dye (Type ID Class A), APWA Section 03 39 00.
3. **EXECUTION**
   A. Base Course Placement: APWA Section 32 05 10. Maximum lift thickness before compaction is 8-inches when using riding equipment or 6-inches when using hand held equipment. Compaction is95 percent or greater relative to a modified proctor density, APWA Section 31 23 26.
   B. Curb Modifications:
      1) The sloped surface created to accommodate the ramp or approach areas shall be perpendicular to the back of curb.
      2) No grade break shall exist between the flow-line and the turning space. Length of the curb modification abutting the turning space is 4 feet minimum.
   C. Curb Ramp: Ramp length not required to exceed 15 feet. Grade breaks are perpendicular to the direction of ramp run and are not permitted on the ramp or turning space surface. Sides are parallel to each other and perpendicular to the ends.
   D. Curb Wall: Set top of curb wall equal to elevation of extended lateral lines of sidewalk.
   E. Concrete Placement: APWA Section 03 30 10.
      1) Maximum length to width ratio for rectangular panel joints is 1.5 to 1. Joint spacing measured in feet not to exceed twice slab thickness measured in inches or a maximum of 15 feet.
      2) Install expansion joints vertical, full depth, with top of filler set flush with concrete surface. Install contraction joints vertical, 1/8-inch wide, and 1/4 of the depth of the concrete flatwork.
      3) Provide 1/2-inch radius edges. Apply a broom finish. Apply a curing agent.
   F. Clear Space: No trip hazards in the clear space.

TURNING SPACE AT STREET LEVEL

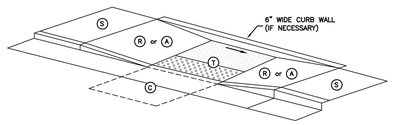

EXAMPLE 5

ELEMENT	DIMENSION
R A	4 FEET WIDE MINIMUM
C T	4 FEET SQUARE MINIMUM

WHERE TURNING SPACE IS CONSTRAINED ON 2 SIDES, PROVIDE 5 FEET IN THE DIRECTION OF THE CROSSWALK

TABLE OF DIMENSIONS

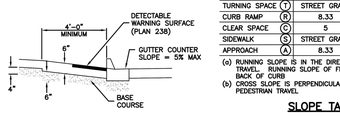

MATERIALS

	RUNNING SLOPE (%) MAXIMUM	CROSS SLOPE (%) MAXIMUM
TURNING SPACE T	STREET GRADE	2
CURB RAMP R	8.33	2
CLEAR SPACE C	5	STREET GRADE
SIDEWALK S	STREET GRADE	2
APPROACH A	8.33	2

(a) RUNNING SLOPE IS IN THE DIRECTION OF PEDESTRIAN TRAVEL. RUNNING SLOPE OF FLARE IS PARALLEL TO BACK OF CURB
(b) CROSS SLOPE IS PERPENDICULAR TO DIRECTION OF PEDESTRIAN TRAVEL

SLOPE TABLE

LICENSED PROFESSIONAL ENGINEER
Morgan
No. 5567061
3-25-15
STATE OF UTAH

WSU DAVIS CAMPUS D13 REMODEL

875 SOUTH UNIVERSITY PARK BLVD.
CLEARFIELD, UT 84041

DFCM

4110 STATE OFFICE BUILDING 450 NORTH STATE STREET SALT LAKE CITY, UT 84114

OWNER PROJECT NO.:	14297810
GSBS PROJECT NO.:	2014.095.00
ISSUED DATE:	03/09/2015

DETAILS

811 Know what's below. Call before you dig.

CALL BLUESTAKES @ 811 AT LEAST 48 HOURS PRIOR TO THE COMMENCEMENT OF ANY CONSTRUCTION.

C-300

DEMOLITION KEY NOTES

Plan Note	COMMENTS
D1	REMOVE EXISTING WALL AND ALL MECHANICAL AND ELECTRICAL FIXTURES/DEVICES AND DOOR, FRAME AND HARDWARE IN WALL TO BE REMOVED. REFER TO MECHANICAL, PLUMBING AND ELECTRICAL FOR ADDITIONAL INFORMATION.
D2	REMOVE EXISTING STOREFRONT COMPLETELY.
D3	REMOVE EXISTING STOREFRONT AS SHOWN. LEAVE EXTENT SHOWN TO REMAIN IN PLACE AND PROVIDE FINISHED END CAPS.
D4	REMOVE EXISTING DOOR FROM FRAME. REPAIR FRAME AS NECESSARY IN PREPARATION FOR NEW DOOR INSTALLATION.
D5	REMOVE STRUCTURAL BRACED FRAME. REFER TO STRUCTURAL FOR ADDITIONAL INFORMATION. DEMOLISH EXISTING WALLS COVERING BRACE FRAMES AS NECESSARY TO COMPLETE WORK. MAINTAIN EXISTING AREAS TO REMAIN AS SHOWN AND ALERT ARCHITECT TO ANY CONFLICTS.
D6	REMOVE EXISTING LOBBY FLOORING AS NECESSARY FOR REMOVAL AND INSTALLATION OF STRUCTURAL ELEMENTS. REINSTALL TILE AFTER REQUIRED STRUCTURAL WORK IS COMPLETED. EXISTING FLOORING IN LOBBY 100 TO REMAIN IN ALL OTHER AREAS. PROTECT AS NECESSARY.
D7	REMOVE EXISTING CARPET FLOORING AND ADHESIVE. SCRAPE AND CLEAN SUBSTRATE AS REQUIRED FOR INSTALLATION OF NEW FLOORING.
D8	REMOVE EXISTING FIXTURE. REFER TO PLUMBING AND ELECTRICAL FOR ADDITIONAL INFORMATION.
D9	REMOVE EXISTING ACOUSTICAL PANEL CEILING AND GRID. HARD CEILINGS TO REMAIN. REPAIR ALL BOPITS AS NECESSARY.
D10	SCRAPE AND CLEAN CONCRETE FLOOR AS REQUIRED FOR INSTALLATION OF NEW FLOORING.
D11	REMOVE ALL EXISTING WINDOW COVERINGS AND PATCH FRAMES AS NECESSARY.
D12	REMOVE EXISTING DOOR, FRAME AND HARDWARE. PATCH AND REPAIR WALL AS NECESSARY IN PREPARATION FOR NEW DOOR AND FRAME INSTALLATION.
D13	REMOVE EXISTING RAILING FROM STRUCTURE/FLOOR. PREPARE SURFACE FOR INSTALLATION OF NEW RAILING.

DEMOLITION NOTES:

SHADED AREA INDICATES LOCATION OF NUMEROUS FLOOR PENETRATIONS AND OTHER INTERVENTIONS IN SLAB-ON-GRADE AND SLAB-ON-DECK FOR MECHANICAL PLUMBING AND ELECTRICAL DEMOLITION AND NEW CONSTRUCTION. MINIMIZE DEMOLITION AS MUCH AS POSSIBLE TO COMPLETE WORK AND SIZE EACH PENETRATION FOR THE PENETRATING ELEMENT. REFER TO STRUCTURAL, MECHANICAL, PLUMBING AND ELECTRICAL DRAWING FOR ADDITIONAL INFORMATION.

SHADED AREA INDICATES SLAB DEMO REQUIRED FOR STRUCTURAL WORK. SEE STRUCTURAL FOR ADDITIONAL INFORMATION.

1. CONTRACTOR TO ASSESS ALL DAMAGE TO FINISHES TO REMAIN PRIOR TO BIDDING. AS A PART OF THIS CONTRACT ALL DAMAGE TO THESE FINISHES WILL BE REPAIRED. INCLUDE ALL COSTS IN BID.

2. WHERE DEMOLISHED ELEMENTS MEET ELEMENTS TO REMAIN PROTECT ALL ELEMENTS/FINISHES AS NECESSARY TO MAINTAIN THEIR CURRENT CONDITION.

3. IN ALL WALLS SHOWN TO REMAIN REMOVE DEVICES AND ASSOCIATED WIRING AS REQUIRED AND PATCH AND REPAIR WALLS. AFTER DEMOLITION IS COMPLETE REPAIR ALL DAMAGED AREAS ON WALL TO REMAIN AND RETURN ALL EXPOSED WALL SURFACES TO A LEVEL 4 FINISH OR BETTER.

4. AFTER DEMOLITION IS COMPLETE PATCH AND REPAIR ALL HOLES IN SLAB-ON-GRADE AND SLAB ON DECK.

5. STRUCTURAL, MECHANICAL, PLUMBING AND ELECTRICAL INFORMATION IS SHOWN FOR REFERENCE ONLY . COORDINATE WITH STRUCTURAL, MECHANICAL, PLUMBING AND ELECTRICAL DRAWINGS FOR ADDITIONAL INFORMATION. ANY CONFLICTS SHOULD BE ADDRESSED WITH ARCHITECT AS SOON AS POSSIBLE.

DEMOLITION LEGEND

- DEMOLISHED WALL
- EXISTING WALL TO REMAIN
- DEMOLISHED POWER OUTLET
- EXISTING POWER OUTLET TO REMAIN
- DEMOLISHED CONTROL SWITCH
- EXISTING CONTROL SWITCH TO REMAIN
- DEMOLISHED COMMUNICATION OUTLET
- EXISTING COMMUNICATION OUTLET TO REMAIN
- DMOLISHED FIRE ALARM PULL STATION
- EXISTING STRUCTURAL BRACE TO BE REMOVED AND REPLACED. SEE STRUCTURAL DRAWINGS FOR ALL DEMOLITION REQUIREMENTS.

1. REFER TO SPECIFICATION SECTION 017419 CONSTRUCTION WASTE MANAGEMENT AND DISPOSAL FOR MORE INFORMTION ON WASTE MANAGEMENT.

2. REFER TO SPECIFICATION SECTION 024119 SELECTIVE DEMOLITION FOR MORE INFORMATION ON DEMOLITION ACTIVITIES AND EXPECTED RESULTS.

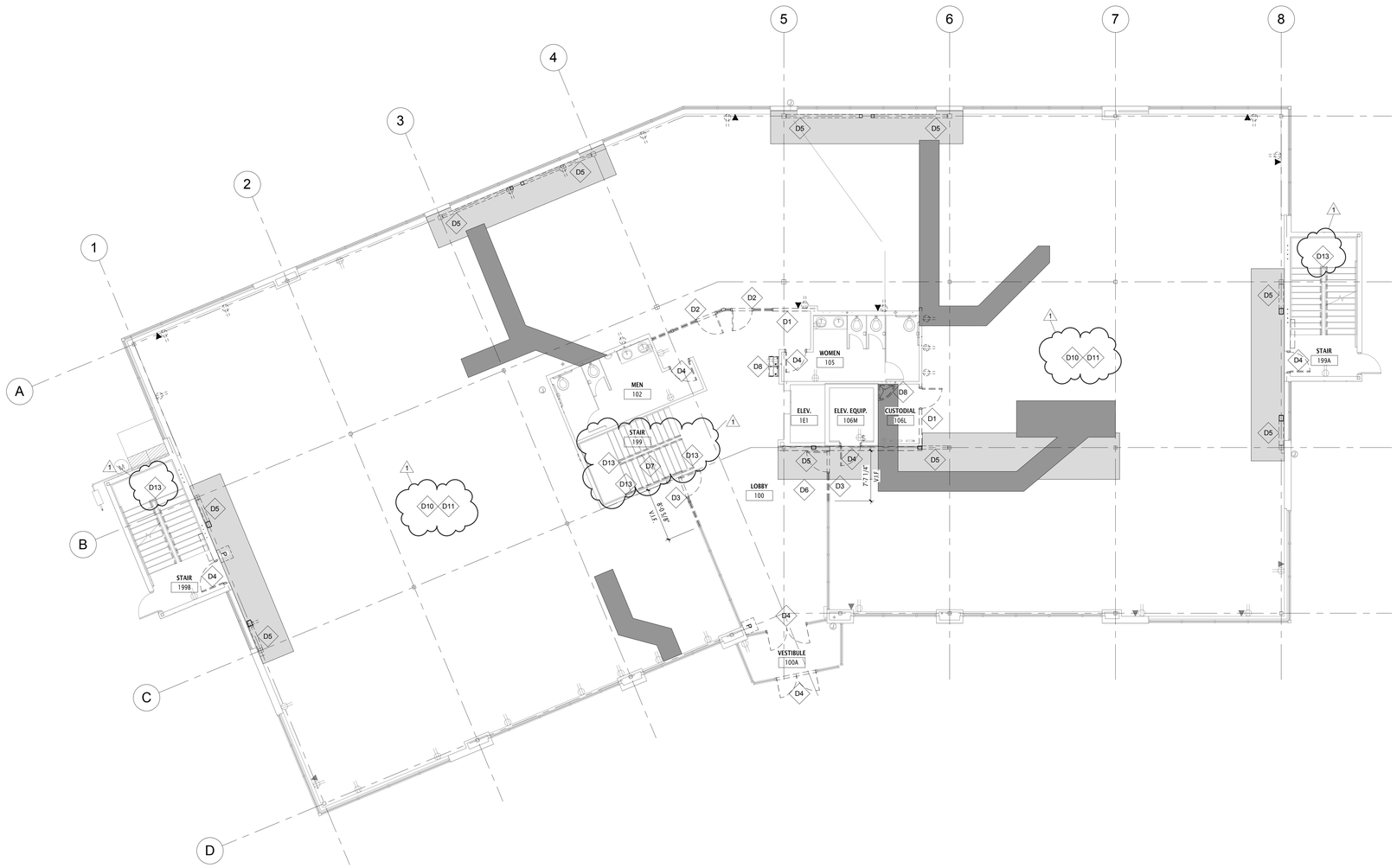

1 AD101 DEMOLITION PLAN - LEVEL 1
1/8" = 1'-0"

GSBS ARCHITECTS

375 WEST 200 SOUTH
SALT LAKE CITY, UT 84101

P 801.521.8600
F 801.521.7913

www.gsbsarchitects.com

REVISIONS:

1	03/27/2015	Addendum #1

PROJECT NORTH

STATE OF UTAH
CHARLES SHAW
5668347-0301
03/09/2015
LICENSED ARCHITECT

WSU DAVIS CAMPUS D13 REMODEL

875 SOUTH UNIVERSITY PARK BLVD.
CLEARFIELD, UT 84041

DFCM

4110 STATE OFFICE
BUILDING 450 NORTH
STATE STREET SALT
LAKE CITY, UT 84114

OWNER PROJECT NO.:	14297810
GSBS PROJECT NO.:	2014.095.00
ISSUED DATE:	03/09/2015

DEMO FLOOR PLAN - LEVEL 1

AD101

DEMOLITION KEY NOTES

Plan Note	COMMENTS
D1	REMOVE EXISTING WALL AND ALL MECHANICAL AND ELECTRICAL FIXTURES/DEVICES AND DOOR, FRAME AND HARDWARE IN WALL TO BE REMOVED. REFER TO MECHANICAL, PLUMBING AND ELECTRICAL FOR ADDITIONAL INFORMATION.
D2	REMOVE EXISTING STOREFRONT COMPLETELY.
D3	REMOVE EXISTING STOREFRONT AS SHOWN. LEAVE EXTENT SHOWN TO REMAIN IN PLACE AND PROVIDE FINISHED END CAPS.
D4	REMOVE EXISTING DOOR FROM FRAME. REPAIR FRAME AS NECESSARY IN PREPARATION FOR NEW DOOR INSTALLATION.
D5	REMOVE STRUCTURAL BRACED FRAME. REFER TO STRUCTURAL FOR ADDITIONAL INFORMATION. DEMOLISH EXISTING WALLS COVERING BRACE FRAMES AS NECESSARY TO COMPLETE WORK. MAINTAIN EXISTING AREAS TO REMAIN AS SHOWN AND ALERT ARCHITECT TO ANY CONFLICTS.
D6	REMOVE EXISTING LOBBY FLOORING AS NECESSARY FOR REMOVAL AND INSTALLATION OF STRUCTURAL ELEMENTS. REINSTALL TILE AFTER REQUIRED STRUCTURAL WORK IS COMPLETED. EXISTING FLOORING IN LOBBY 100 TO REMAIN IN ALL OTHER AREAS. PROTECT AS NECESSARY.
D7	REMOVE EXISTING CARPET FLOORING AND ADHESIVE. SCRAPE AND CLEAN SUBSTRATE AS REQUIRED FOR INSTALLATION OF NEW FLOORING.
D8	REMOVE EXISTING FIXTURE. REFER TO PLUMBING AND ELECTRICAL FOR ADDITIONAL INFORMATION.
D9	REMOVE EXISTING ACOUSTICAL PANEL CEILING AND GRID. HARD LID SOFFITS TO REMAIN. REPAIR ALL SOFFITS AS NECESSARY.
D10	SCRAPE AND CLEAN CONCRETE FLOOR AS REQUIRED FOR INSTALLATION OF NEW FLOORING.
D11	REMOVE ALL EXISTING WINDOW COVERINGS AND PATCH FRAMES AS NECESSARY.
D12	REMOVE EXISTING DOOR, FRAME AND HARDWARE. PATCH AND REPAIR WALL AS NECESSARY IN PREPARATION FOR NEW DOOR AND FRAME INSTALLATION.
D13	REMOVE EXISTING RAILING FROM STRUCTURE/FLOOR. PREPARE SURFACE FOR INSTALLATION OF NEW RAILING.

DEMOLITION NOTES:

SHADED AREA INDICATES LOCATION OF NUMEROUS FLOOR PENETRATIONS AND OTHER INTERVENTIONS IN SLAB-ON-GRADE AND SLAB-ON-DECK FOR MECHANICAL PLUMBING AND ELECTRICAL DEMOLITION AND NEW CONSTRUCTION. MINIMIZE DEMOLITION AS MUCH AS POSSIBLE TO COMPLETE WORK AND SIZE EACH PENETRATION FOR THE PENETRATING ELEMENT. REFER TO STRUCTURAL, MECHANICAL, PLUMBING AND ELECTRICAL DRAWING FOR ADDITIONAL INFORMATION.

SHADED AREA INDICATES SLAB DEMO REQUIRED FOR STRUCTURAL WORK. SEE STRUCTURAL FOR ADDITIONAL INFORMATION.

1. CONTRACTOR TO ASSESS ALL DAMAGE TO FINISHES TO REMAIN PRIOR TO BIDDING. AS A PART OF THIS CONTRACT ALL DAMAGE TO THESE FINISHES WILL BE REPAIRED. INCLUDE ALL COSTS IN BID..

2. WHERE DEMOLISHED ELEMENTS MEET ELEMENTS TO REMAIN PROTECT ALL ELEMENTS/FINISHES AS NECESSARY TO MAINTAIN THEIR CURRENT CONDITION.

3. IN ALL WALLS SHOWN TO REMAIN REMOVE DEVICES AND ASSOCIATED WIRING AS REQUIRED AND PATCH AND REPAIR WALLS. AFTER DEMOLITION IS COMPLETE REPAIR ALL DAMAGED AREAS ON WALL TO REMAIN AND RETURN ALL EXPOSED WALL SURFACES TO A LEVEL 4 FINISH OR BETTER.

4. AFTER DEMOLITION IS COMPLETE PATCH AND REPAIR ALL HOLES IN SLAB-ON-GRADE AND SLAB ON DECK.

5. STRUCTURAL, MECHANICAL, PLUMBING AND ELECTRICAL INFORMATION IS SHOWN FOR REFERENCE ONLY. COORDINATE WITH STRUCTURAL, MECHANICAL, PLUMBING AND ELECTRICAL DRAWINGS FOR ADDITIONAL INFORMATION. ANY CONFLICTS SHOULD BE ADDRESSED WITH ARCHITECT AS SOON AS POSSIBLE.

DEMOLITION LEGEND

- DEMOLISHED WALL
- EXISTING WALL TO REMAIN
- DEMOLISHED POWER OUTLET
- EXISTING POWER OUTLET TO REMAIN
- DEMOLISHED CONTROL SWITCH
- EXISTING CONTROL SWITCH TO REMAIN
- DEMOLISHED COMMUNICATION OUTLET
- EXISTING COMMUNICATION OUTLET TO REMAIN
- P — DMOLISHED FIRE ALARM PULL STATION
- EXISTING STRUCTURAL BRACE TO BE REMOVED AND REPLACED. SEE STRUCTURAL DRAWINGS FOR ALL DEMOLITION REQUIREMENTS.

1. REFER TO SPECIFICATION SECTION 017419 CONSTRUCTION WASTE MANAGEMENT AND DISPOSAL FOR MORE INFORMTION ON WASTE MANAGEMENT.

2. REFER TO SPECIFICATION SECTION 024119 SELECTIVE DEMOLITION FOR MORE INFORMATION ON DEMOLITION ACTIVITIES AND EXPECTED RESULTS.

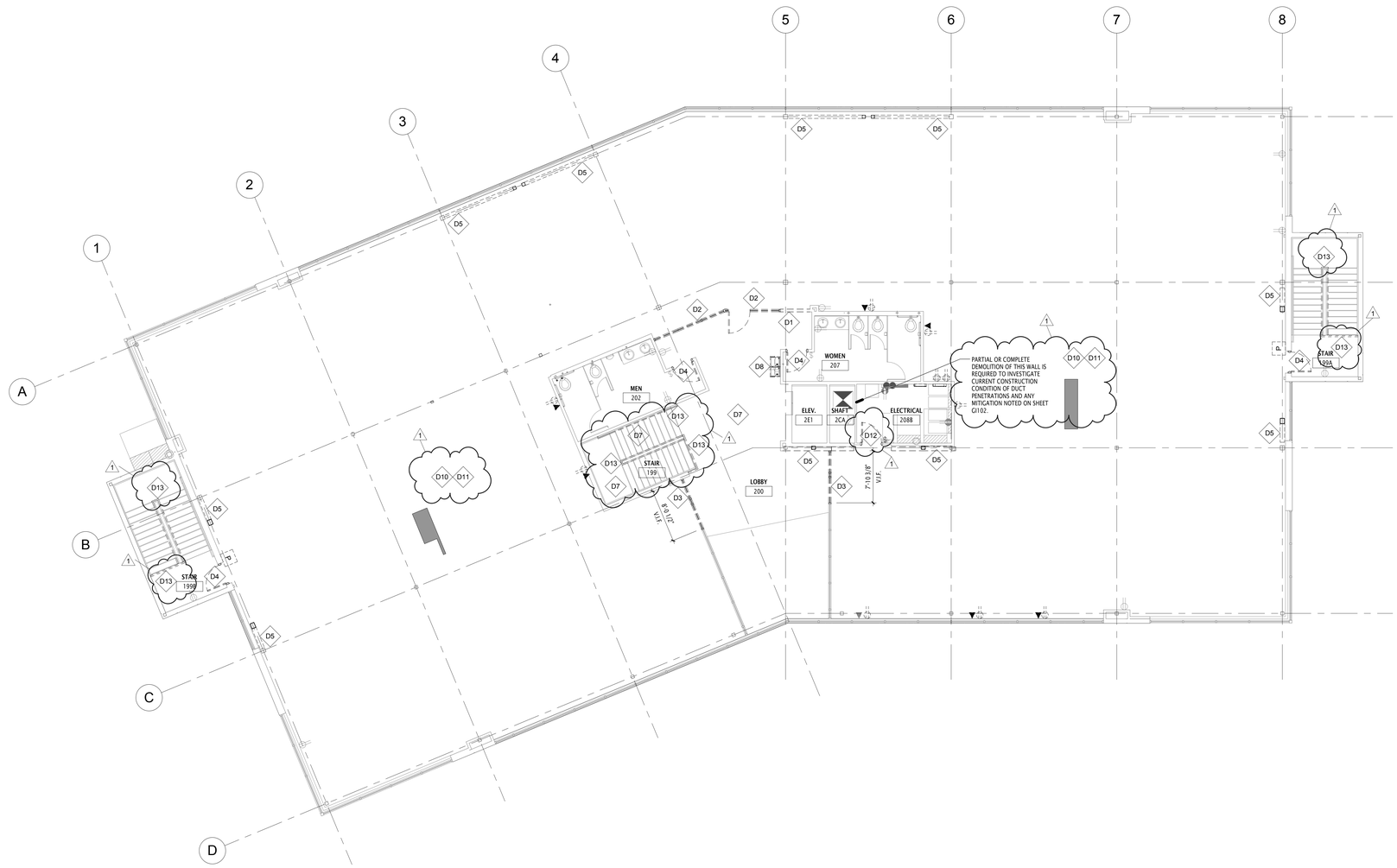

1 AD102 DEMOLITION PLAN - LEVEL 2
1/8" = 1'-0"

GSBS ARCHITECTS

375 WEST 200 SOUTH
SALT LAKE CITY, UT 84101

P 801.521.8600
F 801.521.7913

www.gsbsarchitects.com

REVISIONS:

1	03/27/2015	Addendum #1

PROJECT NORTH

STATE OF UTAH
ARCHITECT
5668347-0301
03/09/2015
LICENSED ARCHITECT

WSU DAVIS CAMPUS D13 REMODEL

875 SOUTH UNIVERSITY PARK BLVD.
CLEARFIELD, UT 84041

DFCM

4110 STATE OFFICE
BUILDING 450 NORTH
STATE STREET SALT
LAKE CITY, UT 84114

OWNER PROJECT NO.:	14297810
GSBS PROJECT NO.:	2014.095.00
ISSUED DATE:	03/09/2015

DEMO FLOOR PLAN - LEVEL 2

AD102

DOOR LEGEND

DOOR SCHEDULE AND WINDOW PANEL NOTES:
EXPLANATION OF SCHEDULE HEADINGS:
A. DOOR MARK: REFERENCE DOOR MARK ON FLOOR PLANS
B. DOOR SIZE: FINISHED DOOR SIZE TO BE INSTALLED IN ONE FRAME
DH - DIVIDERS DOOR
D. DOOR THICKNESS: FINISHED PANEL THICKNESS.
E. DOOR FIRE RATING: FIRE RATING REQUIRED BY INTERNATIONAL BUILDING CODE.
F. DOOR TYPE: REFERENCE DOOR ELEVATIONS
G. DOOR MATERIAL: INDICATES DOOR PANEL CONSTRUCTION MATERIAL
HM - HOLLOW METAL
WD - SOLID CORE WOOD
AL - ALUMINUM
ST - STEEL
H. GLAZING TYPE: GLAZING TYPE IN DOOR PANEL
A - INSULATED FLOAT GLASS
B - INSULATED TEMPERED GLASS
C - 1/4" FLOAT GLASS
D - 1/4" TEMPERED GLASS
E - INSULATED SPANDREL GLASS
F - INSULATED TEMPERED SPANDREL GLASS
G - 1/4" TEMPERED DECORATIVE GLASS
J. DOOR FINISH: FACTORY OR SITE APPLIED DOOR PANEL FINISH
ST - STAIN (FACTORY)
PT - PAINT
CL - CLEAR ANODIZED
K. HARDWARE SET: REFERENCE SPECS - DIVISION 8
L. DOOR FRAME TYPE: SEE DOOR FRAME ELEVATIONS
M. FRAME MATERIAL: CONSTRUCTION MATERIAL
N. FRAME FIRE RATING: REQUIRED FIRE RATING FOR DOOR FRAME (IN MINUTES)
P. THICKNESS: FRAME THICKNESS
Q. GLAZING TYPE: GLAZING TYPE IN DOOR/WINDOW FRAME
A - INSULATED FLOAT GLASS
B - INSULATED TEMPERED GLASS
C - 1/4" FLOAT GLASS
D - 1/4" TEMPERED GLASS
E - INSULATED SPANDREL GLASS
F - INSULATED TEMPERED SPANDREL GLASS
G - 1/4" TEMPERED DECORATIVE GLASS
R. FRAME FINISH: FACTORY OR SITE APPLIED DOOR/WINDOW FRAME FINISH
PT - PAINT
CL - CLEAR ANODIZED

ADA DOOR CLEARANCE

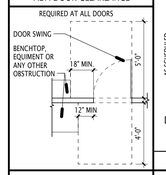

VERIFY ALL MILLWORK DIMENSIONS WITH INSTALLED CONSTRUCTION PRIOR TO PRODUCTION

DOOR/FRAME TYPES

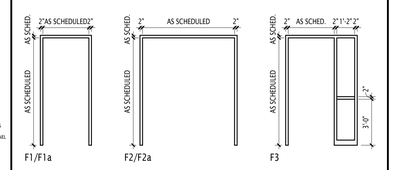

FRAME TYPES

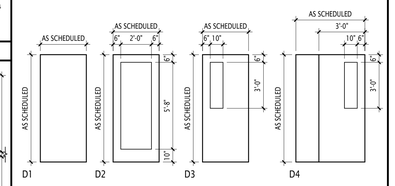

DOOR TYPES

DOOR SCHEDULE - LEVEL 1

Door Number	DOOR Panels	DOOR Width	DOOR Height	DOOR Thickness	DOOR Fire Rating	DOOR Type	DOOR Material	DOOR Glazing	DOOR Finish	DOOR Hardware	FRAME Head Height	FRAME Type	FRAME Material	FRAME Rating	FRAME Glazing	FRAME Finish	Remarks	Door Number
100A-A	PR	3' - 0"	7' - 0"	1 3/4"		D2	ALUM	B	CLR	10			EXISTING			CLR		100A-A
100A-B	PR	3' - 0"	7' - 0"	1 3/4"		D2	ALUM	B	CLR	A			EXISTING			CLR		100A-B
101A	SNGL	3' - 0"	7' - 0"	1 3/4"		D1	WD	-	STN	07	2"	F1	HM		-	PNT		101A
101A-A	SNGL	3' - 0"	7' - 0"	1 3/4"		D1	WD	-	STN	10	2"	F1	HM		-	PNT		101A-A
101B-A	SNGL	3' - 0"	7' - 0"	1 3/4"		D1	WD	-	STN	10	2"	F1	HM		-	PNT		101B-A
101C-A	SNGL	3' - 0"	7' - 0"	1 3/4"		D1	WD	-	STN	11	2"	F1	HM		-	PNT		101C-A
101D-A	SNGL	3' - 0"	7' - 0"	1 3/4"		D1	WD	-	STN	10	2"	F1	HM		-	PNT		101D-A
103A	SNGL	3' - 0"	7' - 0"	1 3/4"		D1	WD	-	STN	13	2"	F1	HM		-	PNT		103A
104A	SNGL	3' - 0"	7' - 0"	1 3/4"		D1	WD	-	STN	13	2"	F1	HM		-	PNT		104A
105A	SNGL	3' - 0"	7' - 0"	1 3/4"		D1	WD	-	STN	07	2"	F1	HM		-	PNT		105A
107A	SNGL	3' - 0"	7' - 0"	1 3/4"		D1	WD	-	STN	07	2"	F1	HM		-	PNT		107A
108A	PR	4' - 6"	7' - 0"	1 3/4"		D4	WD	B	STN	04	2"	F2	HM		-	PNT		108A
108B	SNGL	3' - 0"	7' - 0"	1 3/4"		D1	WD	-	STN	08	2"	F1	HM		-	PNT		108B
109A	SNGL	3' - 0"	7' - 0"	1 3/4"		D1	WD	-	STN	11	2"	F1	HM		-	PNT		109A
110A	SNGL	3' - 0"	7' - 0"	1 3/4"		D1	WD	-	STN	11	2"	F1	HM		-	PNT		110A
111A	SNGL	3' - 0"	7' - 0"	1 3/4"		D1	WD	-	STN	11	2"	F1	HM		-	PNT		111A
112A	SNGL	3' - 0"	7' - 0"	1 3/4"	1 HOUR	D1	WD	-	STN	01	2"	F1	EXISTING	1 HOUR	-	PNT		112A
113A	SNGL	3' - 0"	7' - 0"	1 3/4"		D1	WD	-	STN	14	2"	F1	EXISTING		-	PNT		113A
114A	SNGL	3' - 0"	7' - 0"	1 3/4"		D1	WD	-	STN	07	2"	F1	HM		-	PNT		114A
115A	SNGL	3' - 0"	7' - 0"	1 3/4"		D1	WD	-	STN	07	2"	F1	HM		-	PNT		115A
117A	SNGL	3' - 0"	7' - 0"	1 3/4"		D1	WD	-	STN	14	2"	F1	EXISTING		-	PNT		117A
119A	SNGL	3' - 0"	7' - 0"	1 3/4"		D1	WD	-	STN	11	2"	F1	HM		-	PNT		119A
120A	PR	4' - 6"	7' - 0"	1 3/4"		D3	WD	B	STN	05	2"	F2	HM		-	PNT		120A
120B	SNGL	3' - 0"	7' - 0"	1 3/4"		D1	WD	-	STN	08	2"	F1	HM		-	PNT		120B
121A	SNGL	3' - 0"	7' - 0"	1 3/4"		D1	WD	-	STN	07	2"	F1	HM		-	PNT		121A
123A	SNGL	3' - 0"	7' - 0"	1 3/4"		D1	WD	-	STN	07	2"	F1	HM		-	PNT		123A
124A	SNGL	3' - 0"	7' - 0"	1 3/4"		D1	WD	-	STN	07	2"	F1	HM		-	PNT		124A
199A-A	SNGL	3' - 0"	7' - 0"	1 3/4"	1 HOUR	D1	WD	-	STN	02	2"	F1	EXISTING	1 HOUR	-	PNT		199A-A
199A-B	SNGL	3' - 0"	7' - 0"	1 3/4"		D1	EXISTING	-	PNT	15	2"	F1	EXISTING		-	PNT	NEW HARDWARE ON EXISTING DOORS	199A-B
199B-A	SNGL	3' - 6"	7' - 0"	1 3/4"	1 HOUR	D1	WD	-	STN	02	2"	F1	HM	1 HOUR	-	PNT		199B-A
199B-B	SNGL	3' - 0"	7' - 0"	1 3/4"		D1	EXISTING	-	PNT	15	2"	F1	EXISTING		-	PNT	NEW HARDWARE ON EXISTING DOORS	199B-B

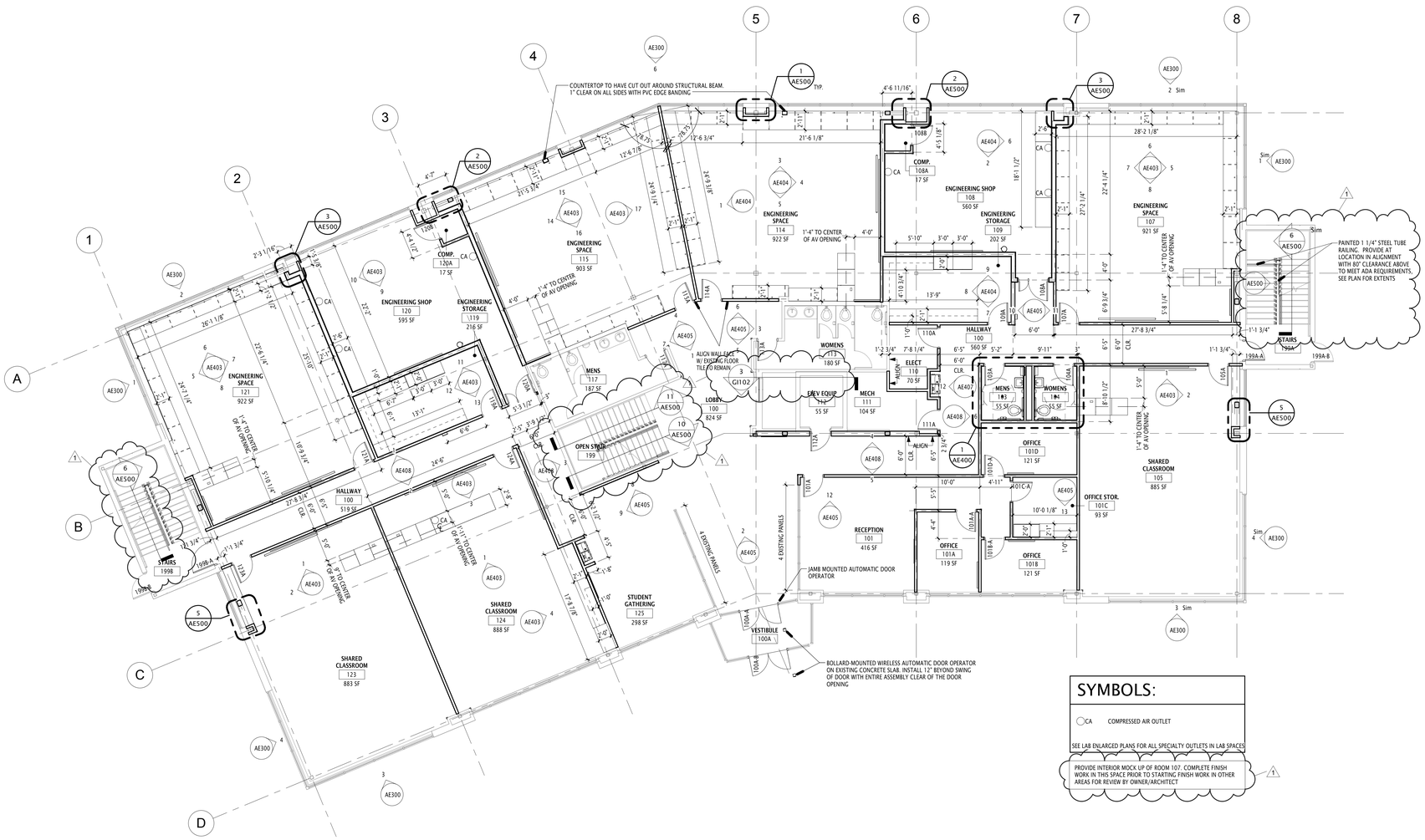

SYMBOLS:

CA COMPRESSED AIR OUTLET

SEE LAB ENLARGED PLANS FOR ALL SPECIALTY OUTLETS IN LAB SPACES

PROVIDE INTERIOR MOCK UP OF ROOM 107. COMPLETE FINISH WORK IN THIS SPACE PRIOR TO STARTING FINISH WORK IN OTHER AREAS FOR REVIEW BY OWNER/ARCHITECT

1 AE201 FLOOR PLAN - LEVEL 1
1/8" = 1'-0"

GSBS ARCHITECTS
375 WEST 200 SOUTH
SALT LAKE CITY, UT 84101
P 801.521.8600
F 801.521.7913
www.gsbsarchitects.com

REVISIONS:

1	03/27/2015	Addendum #1

PROJECT NORTH

STATE OF UTAH
CARL SHAW
5668347-0301
03/09/2015
LICENSED ARCHITECT

WSU DAVIS CAMPUS D13 REMODEL

875 SOUTH UNIVERSITY PARK BLVD.
CLEARFIELD, UT 84041

DFCM

4110 STATE OFFICE BUILDING 450 NORTH
STATE STREET SALT LAKE CITY, UT 84114

OWNER PROJECT NO.:	14297810
GSBS PROJECT NO.:	2014.095.00
ISSUED DATE:	03/09/2015

FLOOR PLAN - LEVEL 1

AE201

DOOR LEGEND

DOOR SCHEDULE AND WINDOW PANEL NOTES:
EXPLANATION OF SCHEDULE HEADINGS:
A. DOOR MARK: REFERENCE DOOR MARK ON FLOOR PLANS
B. DOOR SIZE: FINISHED DOOR SIZE TO BE INSTALLED IN ONE FRAME
DH - OVERHEAD DOOR
D. DOOR THICKNESS FINISHED PANEL THICKNESS.
E. DOOR FIRE RATING: FIRE RATING REQUIRED BY INTERNATIONAL BUILDING CODE
F. DOOR GLAZING: REFER TO DOOR ELEVATIONS
G. DOOR MATERIAL INDICATES DOOR PANEL CONSTRUCTION MATERIAL
HM - HOLLOW METAL
WD - SOLID CORE WOOD
FG - FIBERGLASS
CT - CERAMIC
H. GLAZING TYPE: GLAZING TYPE IN DOOR PANEL
A - INSULATED FLOAT GLASS
B - INSULATED TEMPERED GLASS
C - 1/4" FLOAT GLASS
D - 1/4" TEMPERED GLASS
E - INSULATED SPANDREL GLASS
F - INSULATED TEMPERED SPANDREL GLASS
G - 1/4" TEMPERED DECORATIVE GLASS
J. DOOR FINISH: FACTORY OR SITE APPLIED DOOR PANEL FINISH
ST - STAIN (FACTORY)
PT - PAINT
CL - CLEAR ANODIZED
K. HARDWARE SET: SEE HARDWARE SETS - DIVISION 8
L. DOOR FRAME TYPE: SEE DOOR FRAME ELEVATIONS
M. FRAME MATERIAL: CONSTRUCTION MATERIAL
N. FRAME FIRE RATING: REQUIRED FIRE RATING FOR DOOR FRAME IN MINUTES
P. THICKNESS: FRAME THICKNESS
Q. GLAZING TYPE: GLAZING TYPE IN DOOR/WINDOW FRAME
B - INSULATED FLOAT GLASS
E - INSULATED TEMPERED GLASS
C - 1/4" FLOAT GLASS
D - 1/4" TEMPERED GLASS
F - INSULATED SPANDREL GLASS
F - INSULATED TEMPERED SPANDREL GLASS
G - 1/4" TEMPERED DECORATIVE GLASS
R. FRAME FINISH: FACTORY OR SITE APPLIED DOOR/WINDOW FRAME FINISH
PT - PAINT
CL - CLEAR ANODIZED

ADA DOOR CLEARLANCE

REQUIRED AT ALL DOORS

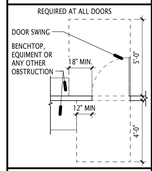

VERIFY ALL MILLWORK DIMENSIONS WITH INSTALLED CONSTRUCTION PRIOR TO PRODUCTION

DOOR/FRAME TYPES

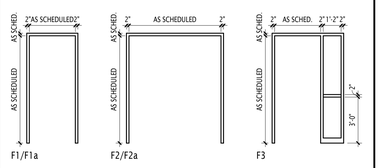

FRAME TYPES

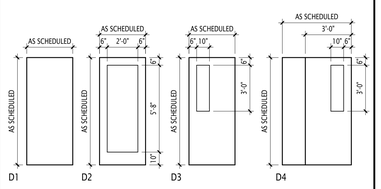

DOOR TYPES

DOOR SCHEDULE - LEVEL 2

Door Number	DOOR Panels	Width	Height	Thickness	Fire Rating	Type	Material	Glazing	Finish	Hardware	FRAME Head Height	Type	Material	Rating	Glazing	Finish	Remarks	Door Number
200A	SNGL	1' - 6"	7' - 0"	1 3/4"		D1	WD	-	STN	11	2"	F1	HM		-	PNT		200A
200B	SNGL	1' - 6"	7' - 0"	1 3/4"		D1	WD	-	STN	11	2"	F1	HM		-	PNT		200B
201A	SNGL	3' - 0"	7' - 0"	1 3/4"		D1	WD	-	STN	11	2"	F1	HM		-	PNT		201A
203A	SNGL	3' - 0"	7' - 0"	1 3/4"		D2	WD	D	STN	09	2"	F1	HM		-	PNT		203A
204A	SNGL	3' - 0"	7' - 0"	1 3/4"		D1	WD	-	STN	17	2"	F1	HM		-	PNT		204A
205A	SNGL	3' - 6"	7' - 0"	1 3/4"		D1	WD	-	STN	06	2"	F1	HM		-	PNT		205A
207A	SNGL	3' - 0"	7' - 0"	1 3/4"		D1	WD	-	STN	07	2"	F1	HM		-	PNT		207A
208A	SNGL	3' - 0"	7' - 0"	1 3/4"		D1	WD	-	STN	07	2"	F1	HM		-	PNT		208A
209A	SNGL	3' - 0"	7' - 0"	1 3/4"		D1	WD	-	STN	12	2"	F1	HM		-	PNT		209A
210A	SNGL	3' - 0"	7' - 0"	1 3/4"		D1	WD	-	STN	16	2"	F1	HM	1	-	PNT		210A
211A	SNGL	3' - 0"	7' - 0"	1 3/4"		D1	WD	-	STN	14	2"	F1	EXISTING		-	PNT		211A
212A	SNGL	3' - 0"	7' - 0"	1 3/4"		D1	WD	-	STN	07	2"	F1	HM		-	PNT		212A
213A	SNGL	3' - 0"	7' - 0"	1 3/4"		D1	WD	-	STN	07	2"	F1	HM		-	PNT		213A
215A	SNGL	3' - 0"	7' - 0"	1 3/4"		D1	WD	-	STN	14	2"	F1	EXISTING		-	PNT		215A
216A	SNGL	3' - 0"	7' - 0"	1 3/4"		D1	WD	-	STN	03	2"	F1	HM		-	PNT		216A
217A	SNGL	3' - 0"	7' - 0"	1 3/4"		D1	WD	-	STN	07	2"	F1	HM		-	PNT		217A
218A	SNGL	3' - 0"	7' - 0"	1 3/4"		D1	WD	-	STN	07	2"	F1	HM		-	PNT		218A
220A	SNGL	3' - 6"	7' - 0"	1 3/4"		D1	WD	-	STN	06	2"	F1	HM		-	PNT		220A
221A	SNGL	3' - 0"	7' - 0"	1 3/4"		D1	WD	-	STN	13	2"	F1	HM		-	PNT		221A
222A	SNGL	3' - 0"	7' - 0"	1 3/4"		D2	WD	D	STN	08	2"	F1	HM		-	PNT		222A
299A-A	SNGL	3' - 0"	7' - 0"	1 3/4"		D1	WD	-	STN	02	2"	F1	EXISTING		-	PNT		299A-A
299B-A	SNGL	3' - 0"	7' - 0"	1 3/4"		D1	WD	-	STN	02	2"	F1	EXISTING		-	PNT		299B-A

GSBS ARCHITECTS
375 WEST 200 SOUTH
SALT LAKE CITY, UT 84101
P 801.521.8600
F 801.521.7913
www.gsbsarchitects.com

REVISIONS:

1	03/27/2015	Addendum #1

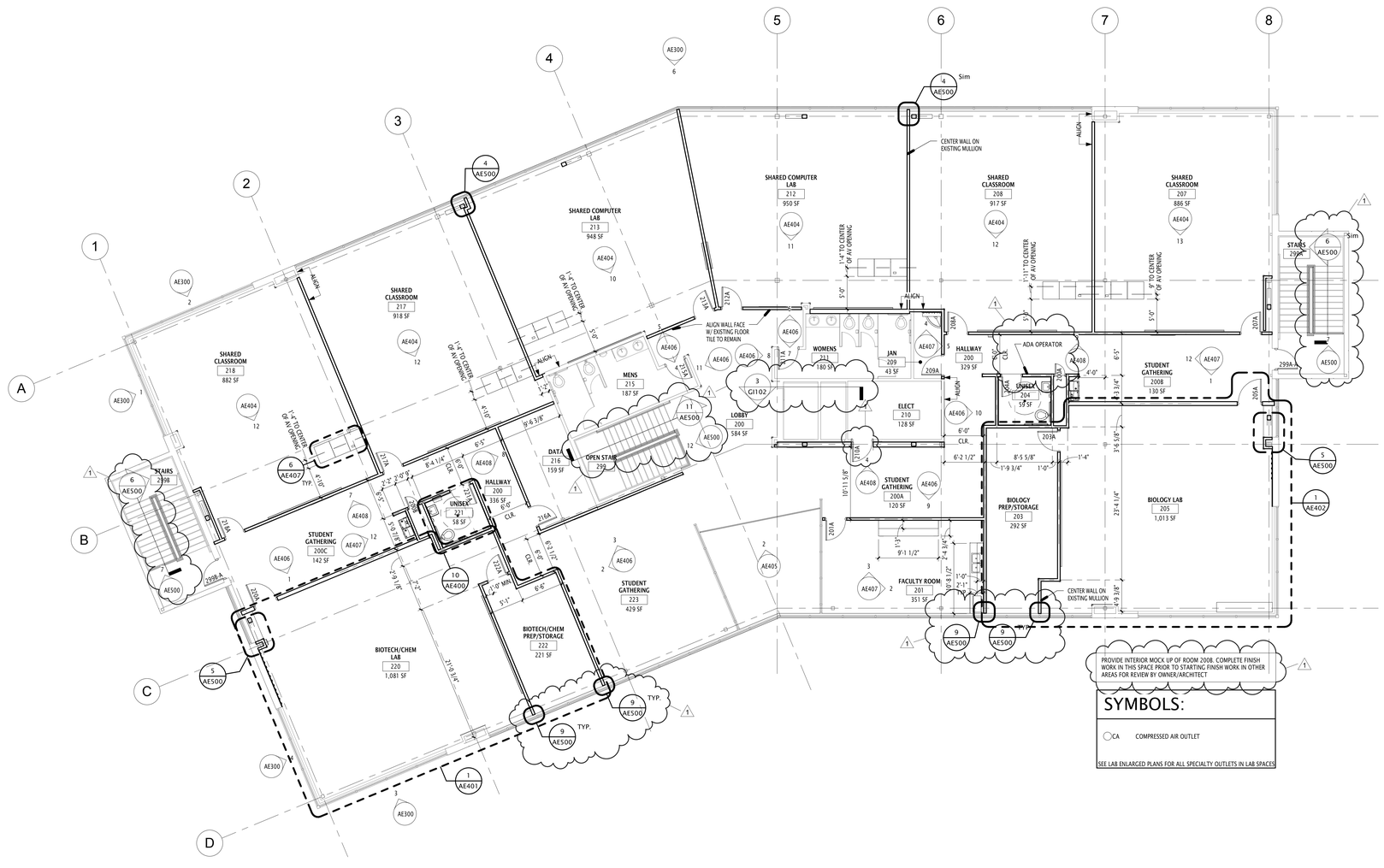

PROJECT NORTH

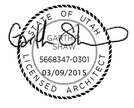

WSU DAVIS CAMPUS D13 REMODEL

875 SOUTH UNIVERSITY PARK BLVD.
CLEARFIELD, UT 84041

DFCM

4110 STATE OFFICE
BUILDING 450 NORTH
STATE STREET SALT
LAKE CITY, UT 84114

OWNER PROJECT NO.:	14297810
GSBS PROJECT NO.:	2014.095.00
ISSUED DATE:	03/09/2015

FLOOR PLAN - LEVEL 2

1 AE202 FLOOR PLAN - LEVEL 2
1/8" = 1'-0"

AE202

BACKING NOTES:

BACKING IS REQUIRED FOR, BUT NOT LIMITED TO, ALL OF THE FOLLOWING:

ALL DOOR STOPS
ALL GRAB BARS
ALL TOILET PAPER AND TOWER DISPENSERS.
ALL MIRRORS.
ALL TELEVISIONS
ALL AV CABINETS
ALL PROJECTORS
ALL WALL HOOKS

WHITEBOARDS AND TACKBOARDS CAN BE MOUNTED DIRECTLY TO STUDS AND DO NOT REQUIRE ADDITIONAL BACKING.

REFER TO 092216 NON-STRUCTURAL METAL FRAMING FOR BACKING PRODUCTS AND ADDITIONAL REQUIREMENTS.

PLYWOOD BACKING REQUIRED AT DATA ROOM.

FINISH KEY

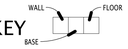

WALLS		BASE		FLOOR		MISC.		NOTES:
P	PAINTED GYP. BOARD	RB	4" VINYL BASE	CP	CARPET TILE	PL	PLASTIC LAMINATE	1. STAINLESS STEEL CORNER GUARDS ON ALL OUTSIDE CORNERS, UP TO 4'-0" A.F.F. SEE FINISH SCHEDULE AE600.
CT	CERAMIC TILE	CTB	COVED CERAMIC TILE BASE	SC	SEALED CONCRETE	SS	EPOXY RESIN SOLID SURFACE	
CG	STAINLESS STEEL CORNER GUARD	EX	EXISTING	MT	MOSAIC TILE	RESIL-1	RESILIENT STAIR NOSING WITH 6" RISER BASE	
T	TACKABLE FABRIC WRAPPED WALL PANEL			LVT	LUXURY VINYL TILE			
VWG	VINYL WALL GRAPHIC. SEE INTERIOR ELEVATIONS.			EM	ENTRY MAT			
EX	EXISTING			EX	EXISTING			
PLY	PLYWOOD UP TO 8'							

GSBS ARCHITECTS

375 WEST 200 SOUTH
SALT LAKE CITY, UT 84101

P 801.521.8600
F 801.521.7913

www.gsbsarchitects.com

REVISIONS:

1	03/27/2015	Addendum #1

WALL TYPES LEGEND

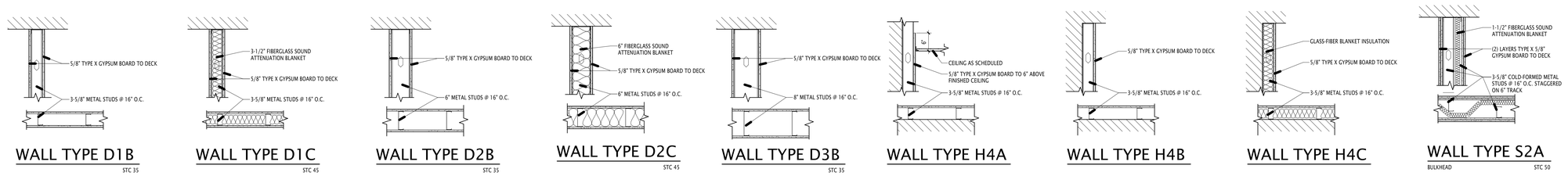

WALL TYPE D1B — STC 35

WALL TYPE D1C — STC 45

WALL TYPE D2B — STC 35

WALL TYPE D2C — STC 45

WALL TYPE D3B — STC 35

WALL TYPE H4A

WALL TYPE H4B

WALL TYPE H4C

WALL TYPE S2A — BULKHEAD — STC 50

3 5/8" STUD (L/360, 5psf)	
25-Gauge	14'-0" High (Max.)
20 DW-Gauge	14'-6" High (Max.)
20 STR-Gauge	16'-6" High (Max.)
6" STUD (L/360, 5psf)	
25-Gauge	20'-0" High (Max.)
20 DW-Gauge	20'-6" High (Max.)
20 STR-Gauge	23'-0" High (Max.)

NOTE:
ABOVE SIZES ARE MINIMUM REQUIREMENTS BASED ON DIETRICH ULTRASTEEL FRAMING. CONTRACTOR SHALL PROVIDE MANUFACTURER'S PUBLISHED LIMITING HEIGHT TABLES TO DEMONSTRATE COMPLIANCE WITH MINIMUM STUD SIZE REQUIREMENTS.

NOTES:

1. ALL WALL DIMENSIONS SHOWN ON DRAWINGS ARE TO CENTER OF STUD FOR NEW CONSTRUCTION UNLESS NOTED OTHERWISE.
2. WALL TYPE TO CONTINUE AT DOOR & WINDOW OPENINGS (TOP & BOTTOM) U.N.O.
3. WHERE METAL STUD FURRING OCCURS ADJACENT TO A CMU WALL, A COMPLETE SEPARATION BETWEEN WALLS IS REQUIRED. DO NOT ATTACH STUD WALL, FINISH SIDE ELECTRICAL BOXES, CONDUIT, ETC. TO WALL.
4. WHERE FREESTANDING METAL STUD FURRING OCCURS, PROVIDE HORIZONTAL METAL STRAPPING @ 4'-0" O.C. (VERTICALLY)
5. THE INTENT OF ACOUSTICAL PARTITIONS IS TO ACHIEVE AS HIGH AN STC RATING AS POSSIBLE. RUN GYPSUM BOARD AS TIGHT AS POSSIBLE AT FLOORS, CEILINGS & PENETRATIONS
6. FOR ANY WALL MISSING A WALL TYPE DESIGNATION, PROVIDE WALL TYPE D1C.
7. PROVIDE BLOCKING IN WALLS & CEILINGS AS REQUIRED FOR INSTALLATION OF MECH., PLUMB. & ELEC. EQUIP. AND SPECIALTIES
8. STENCIL FIRE-RATED WALLS 6" ABOVE ACCESSIBLE CEILINGS, OR AT TOP OF WALL WHERE NO CEILING IS SCHEDULED. THE FOLLOWING: FIRE AND/OR SMOKE BARRIER - PROTECT ALL OPENINGS. REPEAT STENCILING EVERY 30' FOR THE ENTIRE LENGTH OF THE WALL IN 1/2" HIGH LETTERING.
9. ALL T.O. WALL TO DECK CONSTRUCTION SHALL ADDRESS DEFLECTION OF FLOOR AND ROOF ASSEMBLIES. USE DEFLECTION TRACKS AT ALL LOCATIONS INCLUDE RATED WALLS AS NECESSARY. RATED WALLS LOCATIONS SHALL BE A UL LISTED ASSEMBLY. SEE DETAILS BELOW.

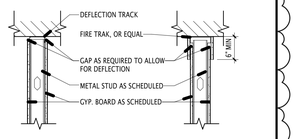

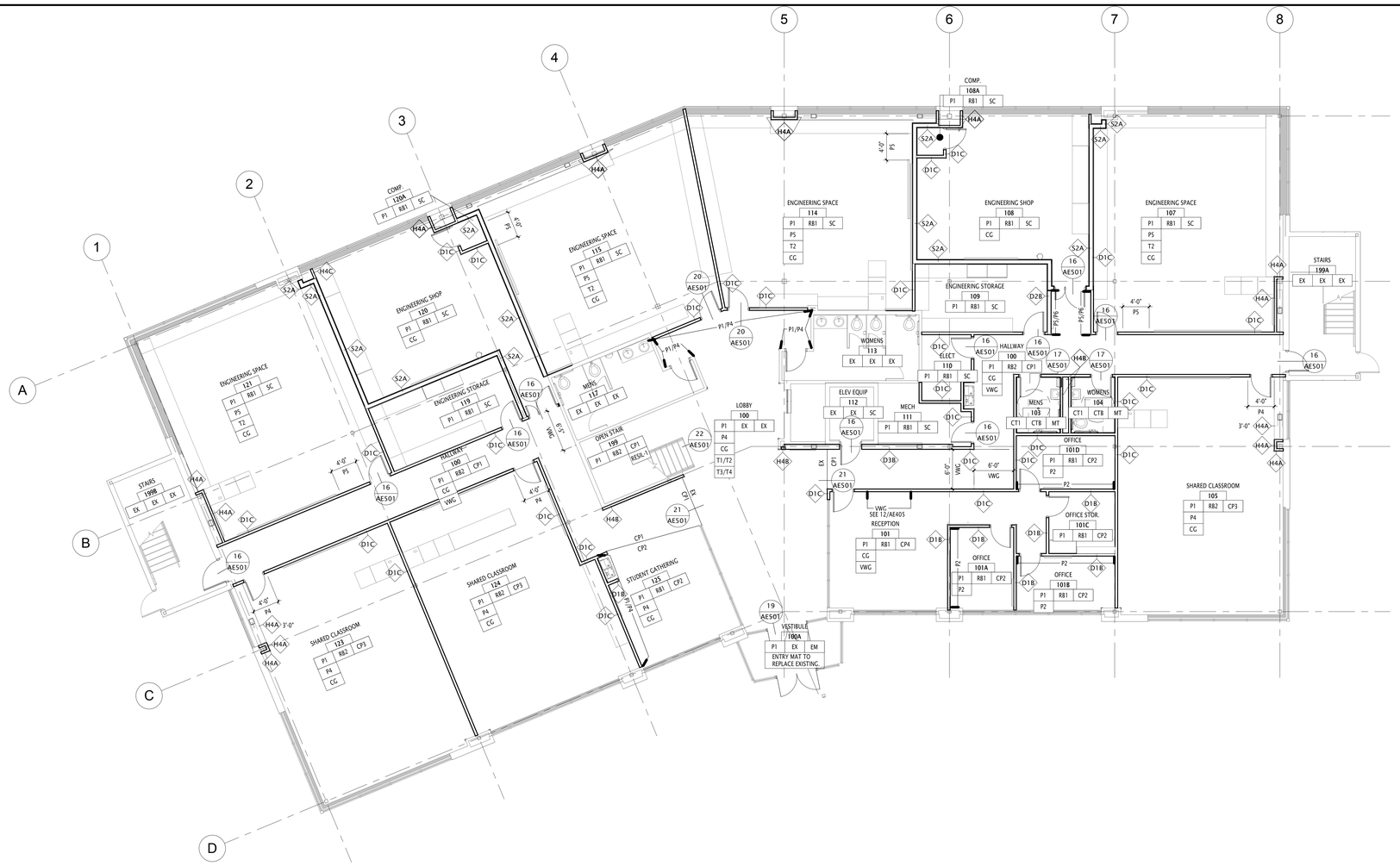

1 AE203 WTFI PLAN - LEVEL 1
1/8" = 1'-0"

STATE OF UTAH
LICENSED ARCHITECT
5668347-0301
03/09/2015

WSU DAVIS CAMPUS D13 REMODEL

875 SOUTH UNIVERSITY PARK BLVD.
CLEARFIELD, UT 84041

DFCM

4110 STATE OFFICE
BUILDING 450 NORTH
STATE STREET SALT
LAKE CITY, UT 84114

OWNER PROJECT NO.:	14297810
GSBS PROJECT NO.:	2014.095.00
ISSUED DATE:	03/09/2015

WTFI - LEVEL 1

AE203

BACKING NOTES:

BACKING IS REQUIRED FOR, BUT NOT LIMITED TO, ALL OF THE FOLLOWING:

ALL DOOR STOPS
ALL GRAB BARS
ALL TOILET PAPER AND TOWER DISPENSERS.
ALL MIRRORS
ALL TELEVISIONS
ALL AV CABINETS
ALL PROJECTORS
ALL WALL HOOKS

WHITEBOARDS AND TACKBOARDS CAN BE MOUNTED DIRECTLY TO STUDS AND DO NOT REQUIRE ADDITIONAL BACKING.

REFER TO 092216 NON-STRUCTURAL METAL FRAMING FOR BACKING PRODUCTS AND ADDITIONAL REQUIREMENTS.

PLYWOOD BACKING REQUIRED AT DATA ROOM.

FINISH KEY

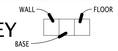

WALLS		BASE		FLOOR		MISC.		NOTES:
P	PAINTED CYP. BOARD	RB	4" VINYL BASE	CP	CARPET TILE	PL	PLASTIC LAMINATE	1. STAINLESS STEEL CORNER GUARDS ON ALL OUTSIDE CORNERS, UP TO 4'-0" A.F.F. SEE FINISH SCHEDULE AE600.
CT	CERAMIC TILE	CTB	COVED CERAMIC TILE BASE	SC	SEALED CONCRETE	SS	EPOXY RESIN SOLID SURFACE	
CG	STAINLESS STEEL CORNER GUARD	EX	EXISTING	MT	MOSAIC TILE	RESIL-1	RESILIENT STAIR NOSING WITH 6" RISER BASE	
T	TACKABLE FABRIC WRAPPED WALL PANEL			LVT	LUXURY VINYL TILE			
VWG	VINYL WALL GRAPHIC. SEE INTERIOR ELEVATIONS.			EM	ENTRY MAT			
EX	EXISTING			EX	EXISTING			
PLY	PLYWOOD UP TO 8'							

GSBS ARCHITECTS

375 WEST 200 SOUTH
SALT LAKE CITY, UT 84101

P 801.521.8600
F 801.521.7913

www.gsbsarchitects.com

REVISIONS:

1	03/27/2015	Addendum #1

WALL TYPES LEGEND

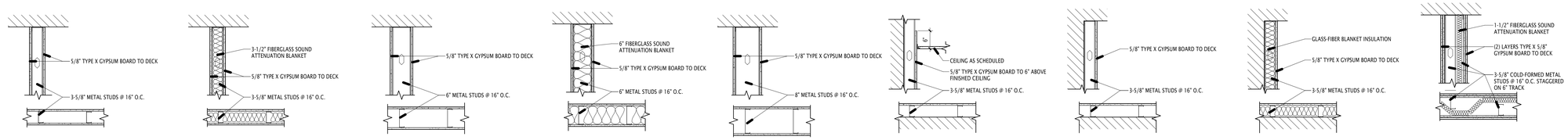

WALL TYPE D1B — STC 35

WALL TYPE D1C — STC 45

WALL TYPE D2B — STC 35

WALL TYPE D2C — STC 45

WALL TYPE D3B — STC 35

WALL TYPE H4A

WALL TYPE H4B

WALL TYPE H4C

WALL TYPE S2A — BULKHEAD — STC 50

3 5/8" STUD (L/360, 5psf)	
25-Gauge	14'-0" High (Max.)
20 DW-Gauge	14'-6" High (Max.)
20 STR-Gauge	16'-6" High (Max.)
6" STUD (L/360, 5psf)	
25-Gauge	20'-0" High (Max.)
20 DW-Gauge	20'-6" High (Max.)
20 STR-Gauge	23'-0" High (Max.)

NOTE:
ABOVE SIZES ARE MINIMUM REQUIREMENTS BASED ON DIETRICH ULTRASTEEL FRAMING. CONTRACTOR SHALL PROVIDE MANUFACTURER'S PUBLISHED LIMITING HEIGHT TABLES TO DEMONSTRATE COMPLIANCE WITH MINIMUM STUD SIZE REQUIREMENTS.

NOTES:

1. ALL WALL DIMENSIONS SHOWN ON DRAWINGS ARE TO CENTER OF STUD FOR NEW CONSTRUCTION UNLESS NOTED OTHERWISE.
2. WALL TYPE TO CONTINUE AT DOOR & WINDOW OPENINGS (TOP & BOTTOM) U.N.O.
3. WHERE METAL STUD FURRING OCCURS ADJACENT TO A CMU WALL, A COMPLETE SEPARATION BETWEEN WALLS IS REQUIRED. DO NOT ATTACH STUD WALL, FINISH SIDE ELECTRICAL BOXES, CONDUIT, ETC. TO WALL.
4. WHERE FREESTANDING METAL STUD FURRING OCCURS, PROVIDE HORIZONTAL METAL STRAPPING @ 4'-0" O.C. (VERTICALLY)
5. THE INTENT OF ACOUSTICAL PARTITIONS IS TO ACHIEVE AS HIGH AN STC RATING AS POSSIBLE. RUN GYPSUM BOARD AS TIGHT AS POSSIBLE AT FLOORS, CEILINGS & PENETRATIONS
6. FOR ANY WALL MISSING A WALL TYPE DESIGNATION, PROVIDE WALL TYPE D1C.
7. PROVIDE BLOCKING IN WALLS & CEILINGS AS REQUIRED FOR INSTALLATION OF MECH., PLUMB. & ELEC. EQUIP. AND SPECIALTIES
8. STENCIL FIRE-RATED WALLS 6" ABOVE ACCESSIBLE CEILINGS, OR AT TOP OF WALL WHERE NO CEILING IS SCHEDULED, THE FOLLOWING: FIRE AND/OR SMOKE BARRIER - PROTECT ALL OPENINGS. REPEAT STENCILING EVERY 30' FOR THE ENTIRE LENGTH OF THE WALL IN 1/2" MIN. HEIGHT LETTERING.
9. ALL T.O. WALL TO DECK CONSTRUCTION SHALL ADDRESS DEFLECTION OF FLOOR AND ROOF ASSEMBLIES. USE DEFLECTION TRACKS AT ALL LOCATIONS INCLUDE RATED WALLS AS NECESSARY. RATED WALLS LOCATIONS SHALL BE A UL LISTED ASSEMBLY. SEE DETAILS BELOW.

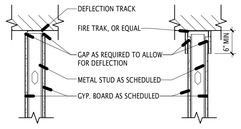

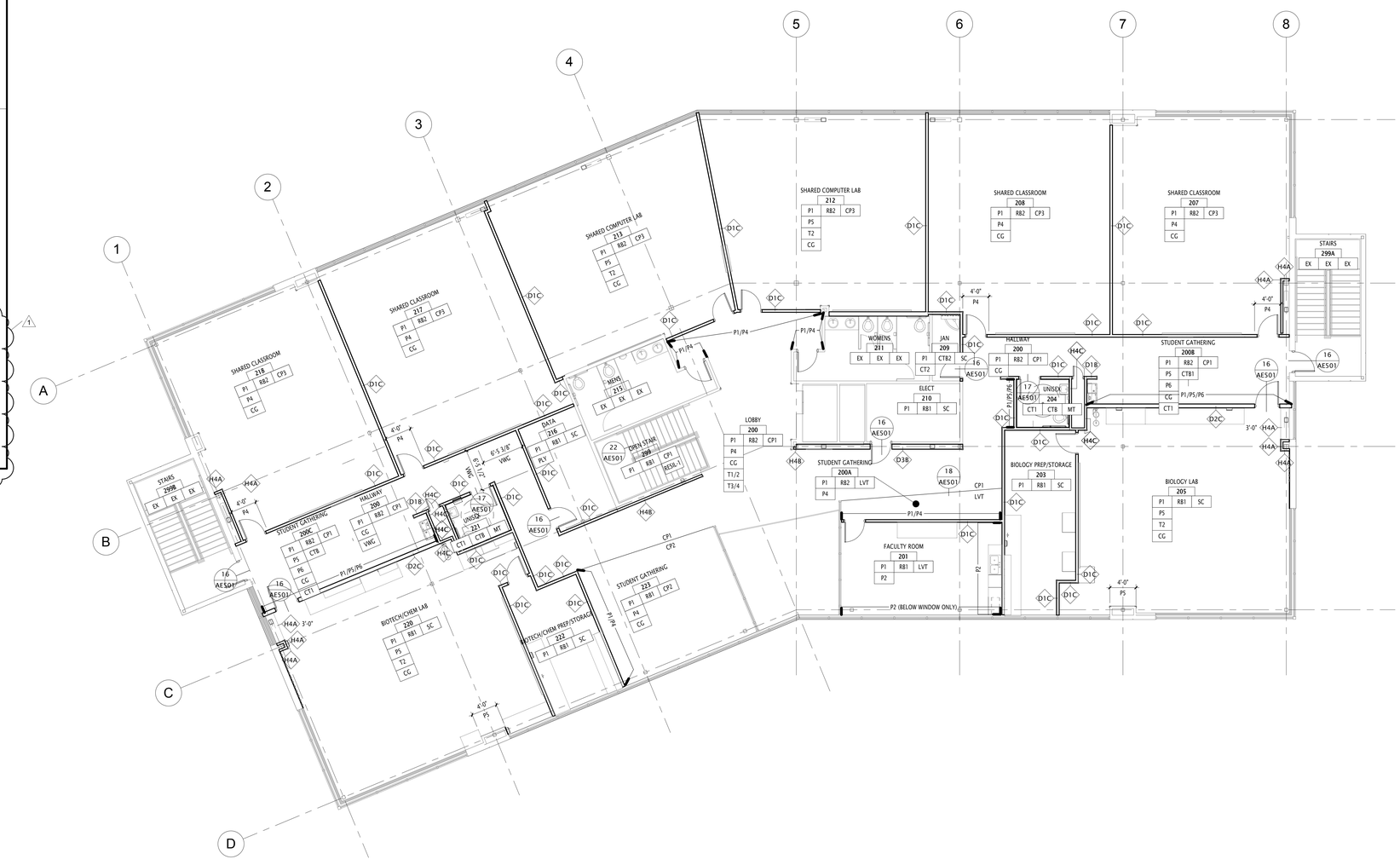

1 / AE204 WTFI PLAN - LEVEL 2
1/8" = 1'-0"

PROJECT NORTH

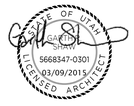

WSU DAVIS CAMPUS D13 REMODEL

875 SOUTH UNIVERSITY PARK BLVD.
CLEARFIELD, UT 84041

DFCM

4110 STATE OFFICE BUILDING 450 NORTH
STATE STREET SALT LAKE CITY, UT 84114

OWNER PROJECT NO.:	14297810
GSBS PROJECT NO.:	2014.095.00
ISSUED DATE:	03/09/2015

WTFI - LEVEL 2

AE204

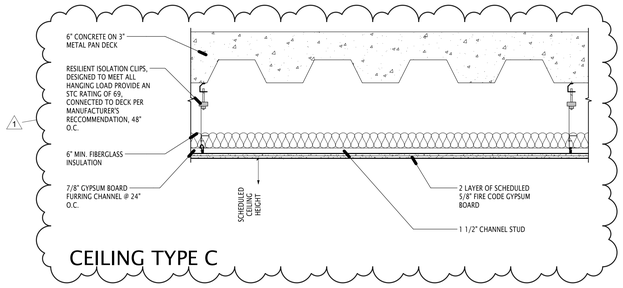

CEILING TYPE C

RCP LEGEND

ROOM #	
TYPE	A
ELEVATION	9'-0"

TYPE EA	EXISTING 2' x 2' LAY-IN ACOUSTICAL TILE IN SUSPENDED GRID
TYPE EB	EXISTING 5/8" GYPSUM BOARD (PAINTED) ON METAL STUD
TYPE A	2' x 2' LAY-IN ACOUSTICAL TILE IN SUSPENDED GRID
TYPE B	5/8" GYPSUM BOARD (PAINTED) ON METAL STUD
TYPE C	5/8" GYPSUM BOARD (PAINTED) ON RESILIENT CLIPS
TYPE D	EXPOSED STRUCTURE

SYMBOL LEGEND

- LAY-IN FIXTURE
- SUSPENED OR SURFACE MOUNTED LINEAR LIGHT
- RECESSED LIGHT FIXTURE
- MECHANICAL DIFFUSER - SUPPLY
- MECHANICAL DIFFUSER - RETURN
- PROJECTOR, CEILING MOUNTED LOCATED 12'-0" TO 14'-0" FROM SCREEN, TYP.
- PROJECTOR SCREEN
- VRF CASSETTE UNIT

GENERAL NOTES

1. MECHANICAL AND ELECTRICAL DATA SHOWN FOR REFERENCE ONLY. COORDINATE WITH MECHANICAL AND ELECTRICAL DRAWINGS. ANY CONFLICTS SHOULD BE ADDRESSED WITH ARCHITECT AS SOON AS POSSIBLE.

2. ANY SPACE WITHOUT A CEILING TAG IS TO RECEIVE CEILING TYPE 'A'

3. UNLESS NOTED OTHERWISE, PROVIDE FRAMED GYP BD. HEADER/ BULKHEAD AT EDGE WHERE ADJACENT CEILINGS HAVE DIFFERENT ELEVATIONS.

4. MANUAL JAMB ROLLER SHADES AT ALL EXTERIOR WINDOWS.

5. ALL DIMENSIONS OF RCP PLANS ARE TO FACE OF WALL AND CENTERLINE OF FIXTURES, U.N.O.

6. ALL GRID CEILINGS TO BE CENTERED IN ROOMS AS SHOWN TO ACCOMODATE DRAWING LAYOUT.

7. PROJECTORS ARE OWNER PROVIDED AND HAVE A THROW OF BETWEEN 13' AND 24'. COORDINATE LOCATION OF PROJECTOR WITH OWNER AND THEN LOCATE APPROPRIATE BACKING AND PROJECTION SCREEN ACCORDINGLY.

EQUIPMENT LEGEND

083113.C1	FLUSH ACCESS DOOR
122413.A1	MANUALLY OPERATED ROLLER SHADE AT ALL EXTERIOR WINDOWS EXCEPT LOBBY

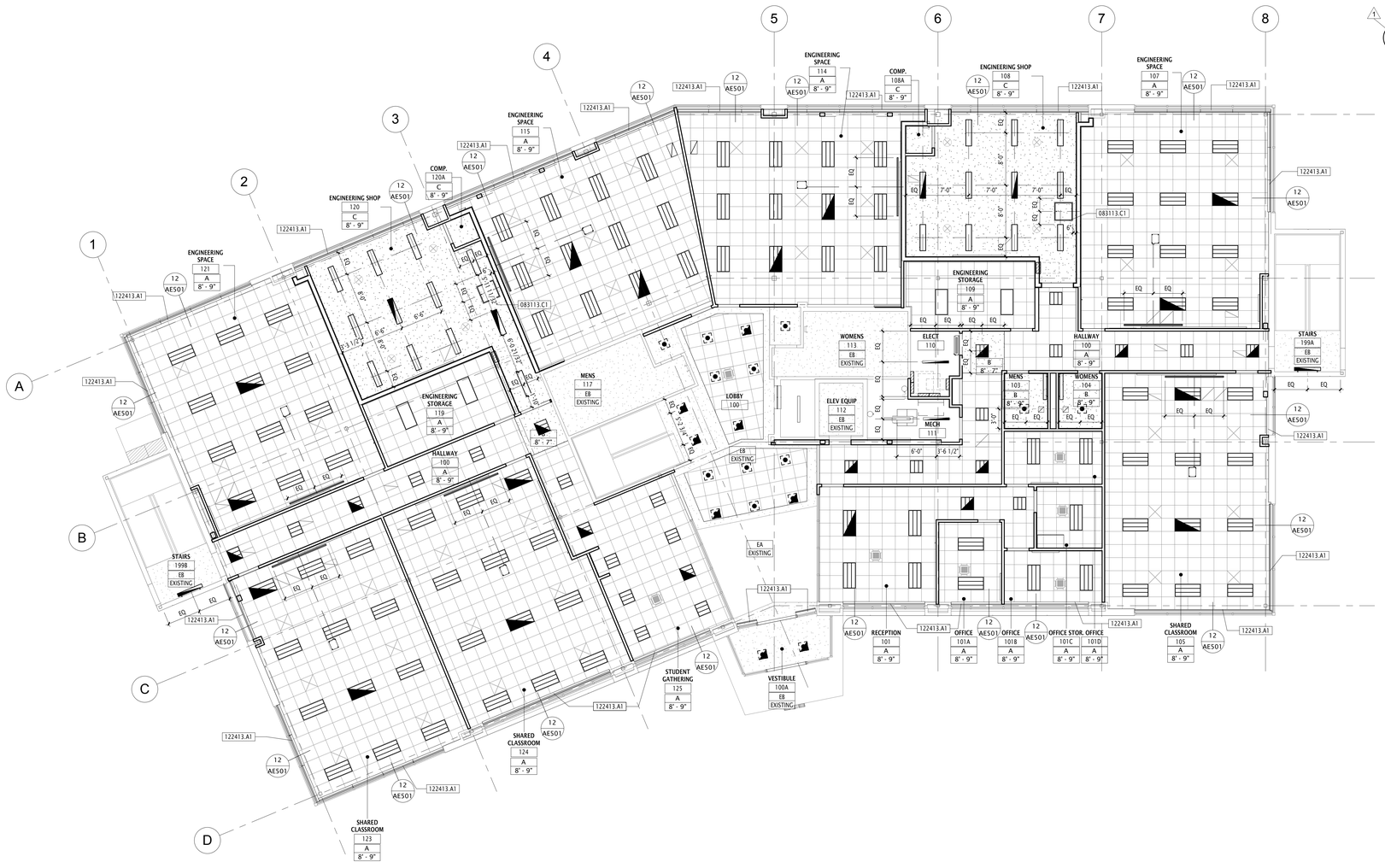

1 AE209 REFLECTED CEILING PLAN - LEVEL 1
1/8" = 1'-0"

GSBS ARCHITECTS
375 WEST 200 SOUTH
SALT LAKE CITY, UT 84101
P 801.521.8600
F 801.521.7913
www.gsbsarchitects.com

REVISIONS:

1	03/27/2015	Addendum #1

STATE OF UTAH
BARRY SHAW
5668347-0301
03/09/2015
LICENSED ARCHITECT

WSU DAVIS CAMPUS D13 REMODEL

875 SOUTH UNIVERSITY PARK BLVD.
CLEARFIELD, UT 84041

DFCM

4110 STATE OFFICE BUILDING 450 NORTH STATE STREET SALT LAKE CITY, UT 84114

OWNER PROJECT NO.:	14297810
GSBS PROJECT NO.:	2014.095.00
ISSUED DATE:	03/09/2015

RCP - LEVEL 1

AE209

RCP LEGEND

ROOM #	
TYPE	A
ELEVATION	9'-0"

TYPE EA	EXISTING 2' x 2' LAY-IN ACOUSTICAL TILE IN SUSPENDED GRID
TYPE EB	EXISTING 5/8" CYPSUM BOARD (PAINTED) ON METAL STUD
TYPE A	2' x 2' LAY-IN ACOUSTICAL TILE IN SUSPENDED GRID
TYPE B	5/8" CYPSUM BOARD (PAINTED) ON METAL STUD
TYPE C	5/8" CYPSUM BOARD (PAINTED) ON RESILIENT CLIPS
TYPE D	EXPOSED STRUCTURE

SYMBOL LEGEND

- LAY-IN FIXTURE
- SUSPENED OR SURFACE MOUNTED LINEAR LIGHT
- RECESSED LIGHT FIXTURE
- MECHANICAL DIFFUSER - SUPPLY
- MECHANICAL DIFFUSER - RETURN
- PROJECTOR, CEILING MOUNTED LOCATED 12'-0" TO 14'-0" FROM SCREEN, TYP.
- PROJECTOR SCREEN
- VRF CASSETTE UNIT

GENERAL NOTES

1. MECHANICAL AND ELECTRICAL DATA SHOWN FOR REFERENCE ONLY. COORDINATE WITH MECHANICAL AND ELECTRICAL DRAWINGS. ANY CONFLICTS SHOULD BE ADDRESSED WITH ARCHITECT AS SOON AS POSSIBLE.

2. ANY SPACE WITHOUT A CEILING TAG IS TO RECEIVE CEILING TYPE 'A'

3. UNLESS NOTED OTHERWISE, PROVIDE FRAMED GYP BD. HEADER/ BULKHEAD AT EDGE WHERE ADJACENT CEILINGS HAVE DIFFERENT ELEVATIONS.

4. MANUAL JAMB ROLLER SHADES AT ALL EXTERIOR WINDOWS.

5. ALL DIMENSIONS OF RCP PLANS ARE TO FACE OF WALL AND CENTERLINE OF FIXTURES, U.N.O.

6. ALL GRID CEILINGS TO BE CENTERED IN ROOMS AS SHOWN TO ACCOMODATE LIGHTING LAYOUT.

7. PROJECTORS ARE OWNER PROVIDED AND HAVE A THROW OF BETWEEN 13' AND 24'. COORDINATE LOCATION OF PROJECTOR WITH OWNER AND THEN LOCATE APPROPRIATE BACKING AND PROJECTION SCREEN ACCORDINGLY.

EQUIPMENT LEGEND

122413.A1	MANUALLY OPERATED ROLLER SHADE AT ALL EXTERIOR WINDOWS EXCEPT LOBBY

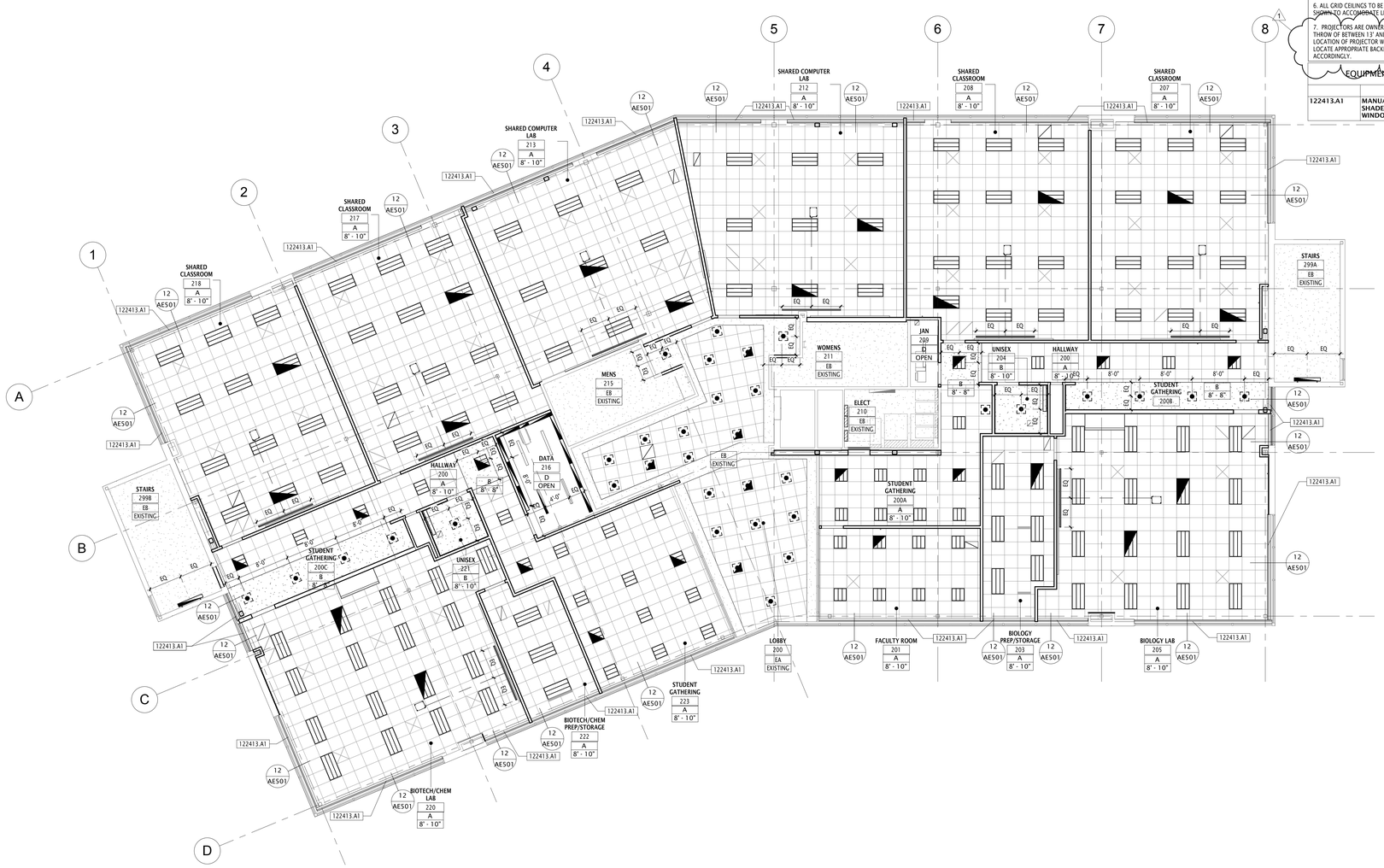

1 AE210 REFLECTED CEILING PLAN - LEVEL 2
1/8" = 1'-0"

GSBS ARCHITECTS

375 WEST 200 SOUTH
SALT LAKE CITY, UT 84101

P 801.521.8600
F 801.521.7913

www.gsbsarchitects.com

REVISIONS:

1	03/27/2015	Addendum #1

PROJECT NORTH

STATE OF UTAH
5668347-0301
03/09/2015
LICENSED ARCHITECT

WSU DAVIS CAMPUS D13 REMODEL

875 SOUTH UNIVERSITY PARK BLVD.
CLEARFIELD, UT 84041

DFCM

4110 STATE OFFICE
BUILDING 450 NORTH
STATE STREET SALT
LAKE CITY, UT 84114

OWNER PROJECT NO.:	14297810
GSBS PROJECT NO.:	2014.095.00
ISSUED DATE:	03/09/2015

RCP - LEVEL 2

AE210

GSBS ARCHITECTS

375 WEST 200 SOUTH
SALT LAKE CITY, UT 84101

P 801.521.8600
F 801.521.7913

www.gsbsarchitects.com

REVISIONS:

1	03/27/2015	Addendum #1

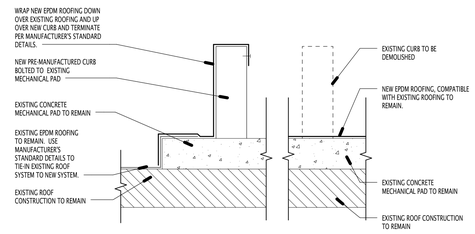

3 AE211 NEW ROOFING AND CURB DETAIL
1 1/2" = 1'-0"

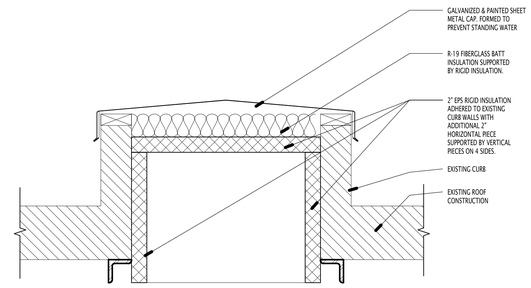

2 AE211 ROOF CAP DETAIL
1 1/2" = 1'-0"

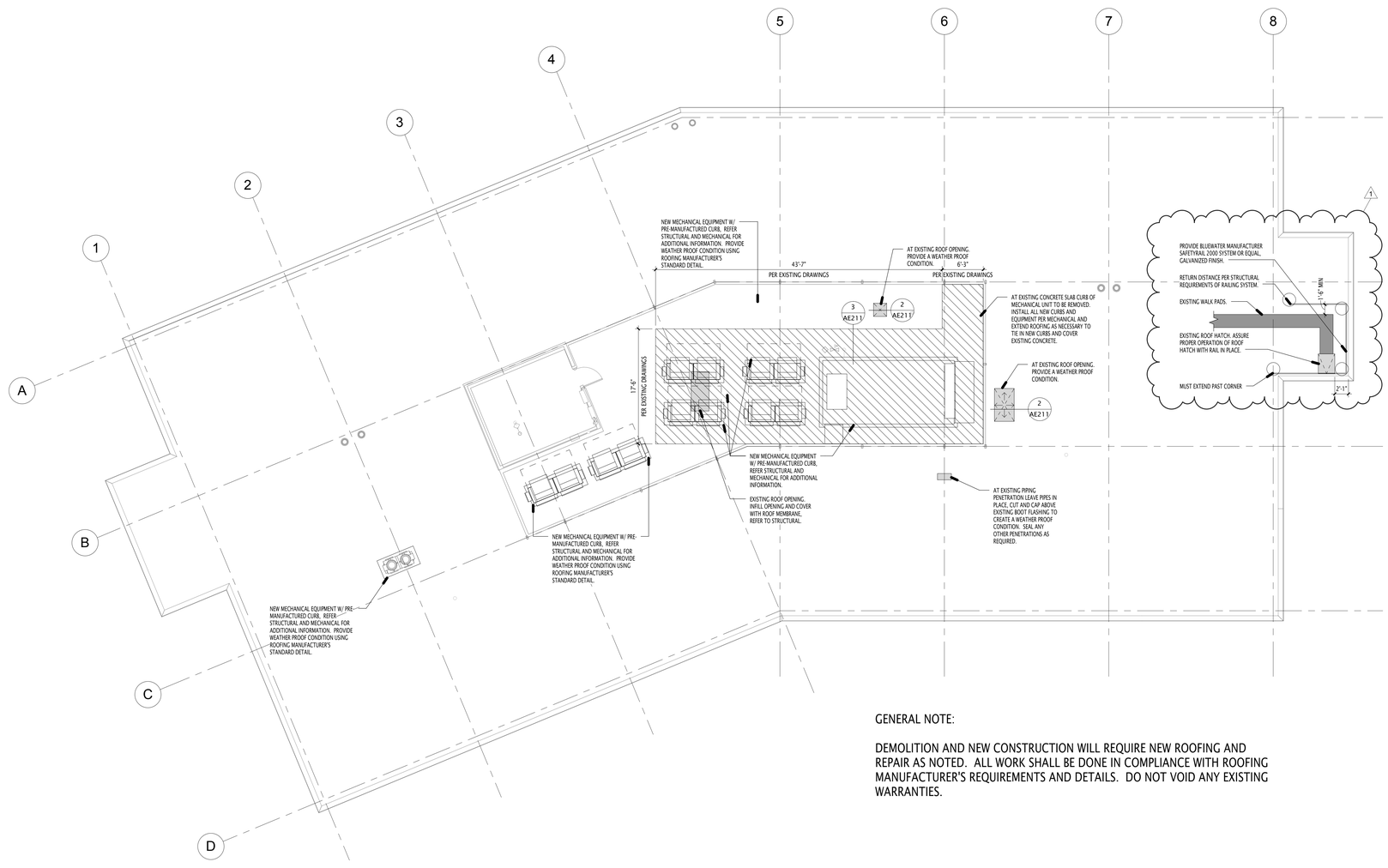

GENERAL NOTE:

DEMOLITION AND NEW CONSTRUCTION WILL REQUIRE NEW ROOFING AND REPAIR AS NOTED. ALL WORK SHALL BE DONE IN COMPLIANCE WITH ROOFING MANUFACTURER'S REQUIREMENTS AND DETAILS. DO NOT VOID ANY EXISTING WARRANTIES.

1 AE211 ROOF PLAN
1/8" = 1'-0"

PROJECT NORTH

STATE OF UTAH
BRADLEY S. SHAW
5668347-0301
03/09/2015
LICENSED ARCHITECT

WSU DAVIS CAMPUS D13 REMODEL

875 SOUTH UNIVERSITY PARK BLVD.
CLEARFIELD, UT 84041

DFCM

4110 STATE OFFICE
BUILDING 450 NORTH
STATE STREET SALT
LAKE CITY, UT 84114

OWNER PROJECT NO.:	14297810
GSBS PROJECT NO.:	2014.095.00
ISSUED DATE:	03/09/2015

ROOF PLAN

AE211

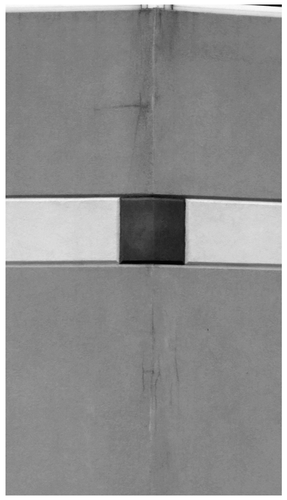

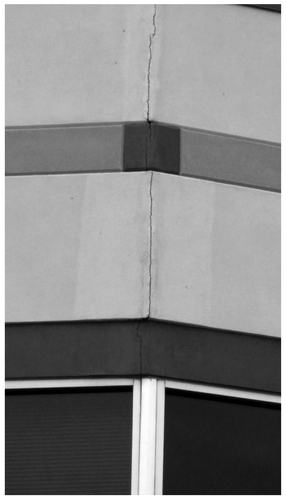

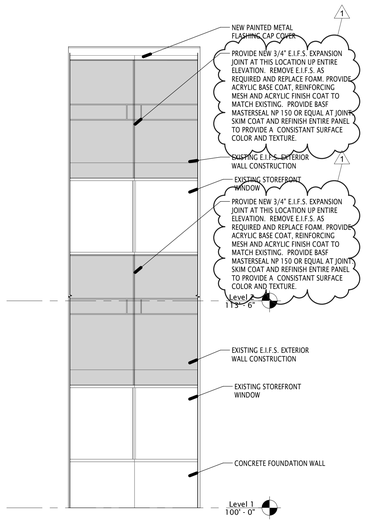

6 AE300 E.I.F.S. JOINT REPAIR REQUIREMENTS (#3)
1/4" = 1'-0"

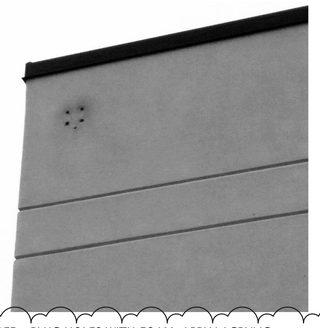

#2 PATCH AND REPAIR E.I.F.S. AS REQUIRED. PLUG HOLES WITH FOAM, APPLY ACRYLIC BASE COAT, REINFORCEMENT MESH AND ACRYLIC FINISH COAT TO MATCH EXISTING. SKIM COAT AND REFINISH ENTIRE PANEL TO PROVIDE CONSISTANT SURFACE COLOR AND TEXTURE.

#1 PATCH AND REPAIR E.I.F.S. AS REQUIRED. PLUG HOLES WITH FOAM, APPLY ACRYLIC BASE COAT, REINFORCEMENT MESH AND ACRYLIC FINISH COAT TO MATCH EXISTING. SKIM COAT AND REFINISH ENTIRE PANEL TO PROVIDE CONSISTANT SURFACE COLOR AND TEXTURE.

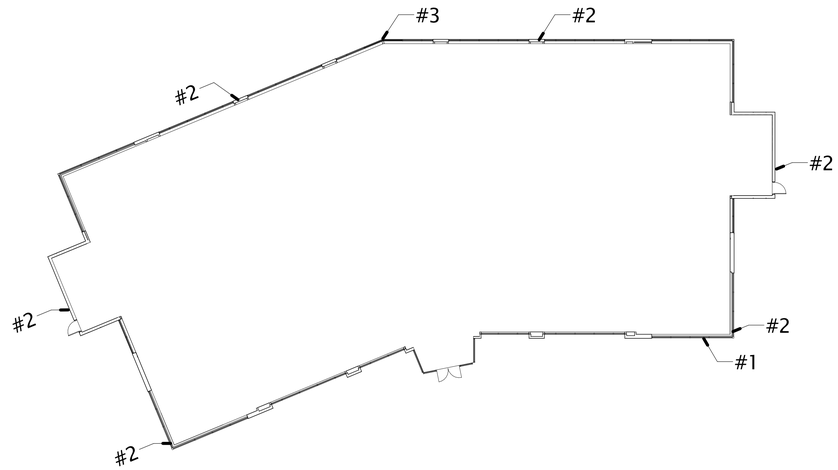

5 AE300 KEY PLAN FOR E.I.F.S. REPAIR REQUIREMENTS
1/16" = 1'-0"

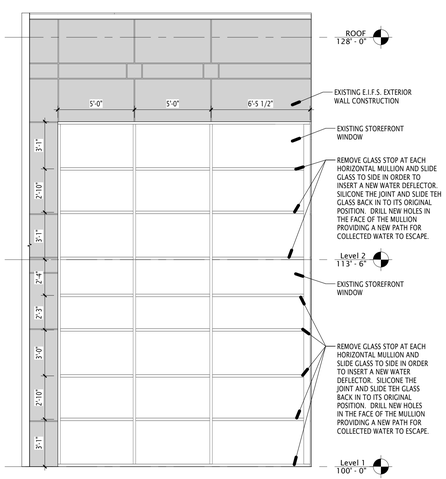

4 AE300 EXISTING WINDOW ELEVATION - 4
1/4" = 1'-0"

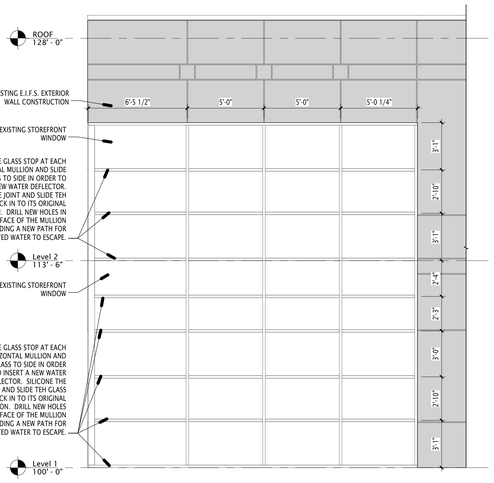

3 AE300 EXISTING WINDOW ELEVATION - 3
1/4" = 1'-0"

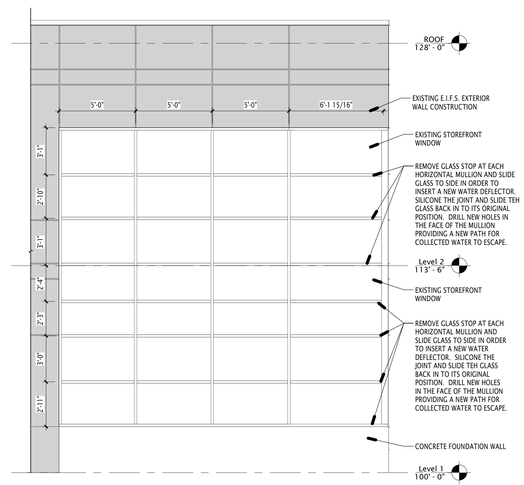

2 AE300 EXISTING WINDOW ELEVATION - 2
1/4" = 1'-0"

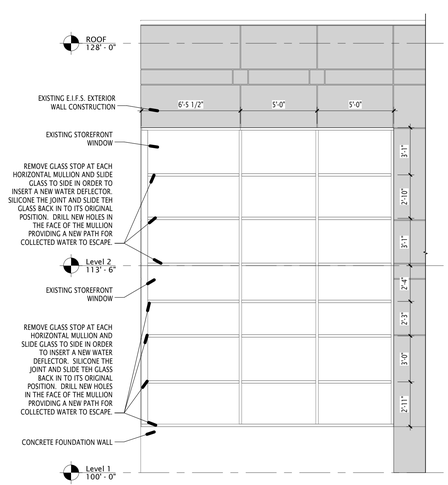

1 AE300 EXISTING WINDOW ELEVATION - 1
1/4" = 1'-0"

GSBS ARCHITECTS

375 WEST 200 SOUTH
SALT LAKE CITY, UT 84101

P 801.521.8600
F 801.521.7913

www.gsbsarchitects.com

REVISIONS:

1	03/27/2015	Addendum #1

WSU DAVIS CAMPUS D13 REMODEL

875 SOUTH UNIVERSITY PARK BLVD.
CLEARFIELD, UT 84041

DFCM

4110 STATE OFFICE
BUILDING 450 NORTH
STATE STREET SALT
LAKE CITY, UT 84114

OWNER PROJECT NO.:	14297810
GSBS PROJECT NO.:	2014.095.00
ISSUED DATE:	03/09/2015

EXTERIOR WINDOW ELEVATIONS

AE300

BACKING NOTES:

BACKING IS REQUIRED FOR, BUT NOT LIMITED TO, ALL OF THE FOLLOWING:

ALL DOOR STOPS
ALL GRAB BARS
ALL TOILET PAPER AND TOWER DISPENSERS.
ALL MIRRORS
ALL TELEVISIONS
ALL AV CABINETS
ALL PROJECTORS
ALL WALL HOOKS

WHITEBOARDS AND TACKBOARDS CAN BE MOUNTED DIRECTLY TO STUDS AND DO NOT REQUIRE ADDITIONAL BACKING.

REFER TO 092216 NON-STRUCTURAL METAL FRAMING FOR BACKING PRODUCTS AND ADDITIONAL REQUIREMENTS.

PLYWOOD BACKING REQUIRED AT DATA ROOM.

GENERAL NOTES:

1. ALL EXPOSED MILLWORK TO BE SCHEDULED PLASTIC LAMINATE TO MATCH FINISH FACE.
2. ALL INTERIOR MILLWORK FINISHES TO BE WHITE MELAMINE UNLESS OTHERWISE SPECIFIED.
3. PROVIDE FILLER ON ALL MILLWORK AS NEEDED. USE SAME CABINET FACE PLASTIC LAMINTE AS FINISH FACE.
4. FOR MILLWORK DEPTHS, SEE FLOOR PLAN OR ENLARGED PLAN.
5. SEE AE-600 FOR SCHEDULED FINISHES AND MILLWORK
6. BACKSPLASHES TO BE 4" HIGH EXCEPT WHERE WINDOW SILL IS LESS THAN 3'-2". THEN BACKSPLASH SHOULD BE OF LEVEL HEIGHT WITH SILL.
7. ALL INTERIOR COLUMNS TO BE PAINTED, P3.
8. COUNTER SUPPORTS TO MATCH COUNTER FINISH AND PLACED @ NO MORE THAN 4'-0" APART.
9. ALL DRAWERS / DOORS TO BE LOCKING.

EQUIPMENT LEGEND

096513.C1B	4" RUBBER BASE
097723.A1A	FABRIC WRAPPED PANEL TACKBOARD (T2). FELT FACED. 4' X 4' PROVIDED AND INSTALLED BY CONTRACTOR.
097723.A1C	FABRIC WRAPPED PANEL TACKBOARD (T1). FELT FACED. 1' X 1' PROVIDED AND INSTALLED BY CONTRACTOR.
097723.A1D	FABRIC WRAPPED PANEL TACKBOARD (T2). FELT FACED. 1' X 1' PROVIDED AND INSTALLED BY CONTRACTOR.
097723.A1E	FABRIC WRAPPED PANEL TACKBOARD (T3). FELT FACED. 1' X 1' PROVIDED AND INSTALLED BY CONTRACTOR.
097723.A1F	FABRIC WRAPPED PANEL TACKBOARD (T3). FELT FACED. 1' X 1'-6" PROVIDED AND INSTALLED BY CONTRACTOR.
097723.A1G	FABRIC WRAPPED PANEL TACKBOARD (T1). FELT FACED. 2' X 2' PROVIDED AND INSTALLED BY CONTRACTOR.
097723.A1H	FABRIC WRAPPED PANEL TACKBOARD (T2). FELT FACED. 1' X 4'-6" PROVIDED AND INSTALLED BY CONTRACTOR.
097723.A1I	FABRIC WRAPPED PANEL TACKBOARD (T3). FELT FACED. 1' X 4'-6" PROVIDED AND INSTALLED BY CONTRACTOR.
097723.A1J	FABRIC WRAPPED PANEL TACKBOARD (T3). FELT FACED. 1' X 3' PROVIDED AND INSTALLED BY CONTRACTOR.
097723.A1K	FABRIC WRAPPED PANEL TACKBOARD (T4). FELT FACED. 1' X 3' PROVIDED AND INSTALLED BY CONTRACTOR.
097723.A1L	FABRIC WRAPPED PANEL TACKBOARD (T4). FELT FACED. 2' X 3' PROVIDED AND INSTALLED BY CONTRACTOR.
097723.A1M	FABRIC WRAPPED PANEL TACKBOARD (T3). FELT FACED. 1' X 3'-6" PROVIDED AND INSTALLED BY CONTRACTOR.
099123.A6A	5/8" GYPSUM BOARD, PAINTED (P1)
099123.A6D	5/8" GYPSUM BOARD, PAINTED (P4)
099123.A6E	5/8" GYPSUM BOARD, PAINTED (P5)
099123.A6F	5/8" GYPSUM BOARD, PAINTED (P6)
102600.A2	STAINLESS STEEL CORNER GUARD
FFE.4	FLAT SCREEN TELEVISION. PROVIDED BY OWNERS. INSTALLED BY CONTRACTOR.

GSBS ARCHITECTS
375 WEST 200 SOUTH
SALT LAKE CITY, UT 84101
P 801.521.8600
F 801.521.7913
www.gsbsarchitects.com

REVISIONS:

1	03/27/2015	Addendum #1

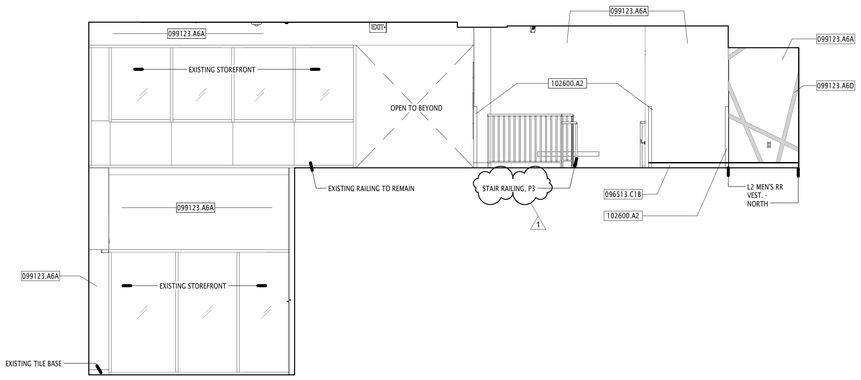

11 AE406 LOBBY 200 - NORTH
1/4" = 1'-0"

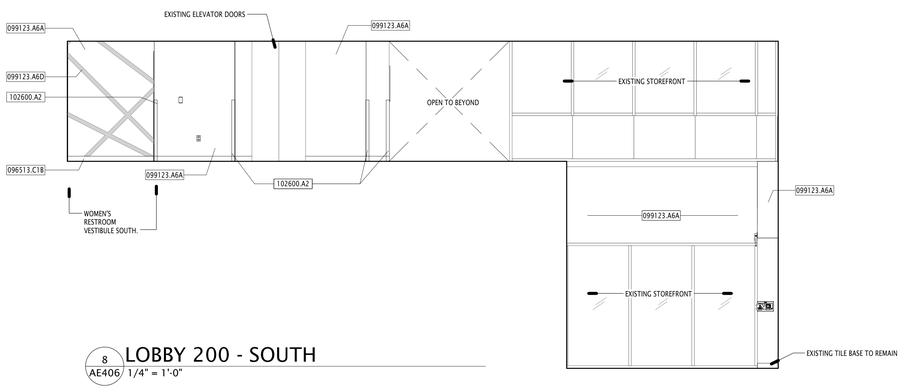

8 AE406 LOBBY 200 - SOUTH
1/4" = 1'-0"

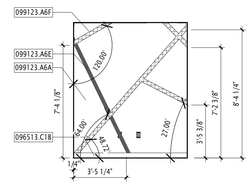

10 AE406 HALLWAY 200 - SOUTH
1/4" = 1'-0"

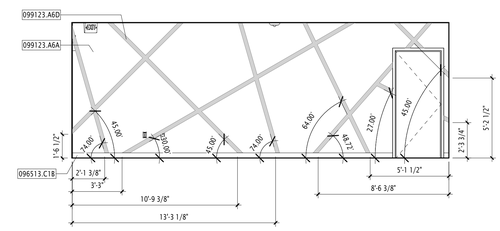

9 AE406 STUDENT GATHERING 200A - WEST
1/4" = 1'-0"

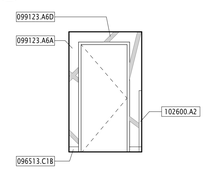

7 AE406 L2 WOMEN'S RESTROOM VESTIBULE - WEST
1/4" = 1'-0"

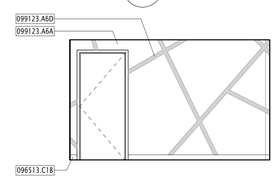

6 AE406 LOBBY 200 - EAST (2)
1/4" = 1'-0"

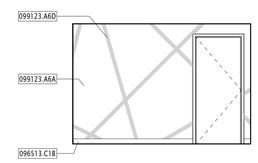

5 AE406 LOBBY 200 - EAST (1)
1/4" = 1'-0"

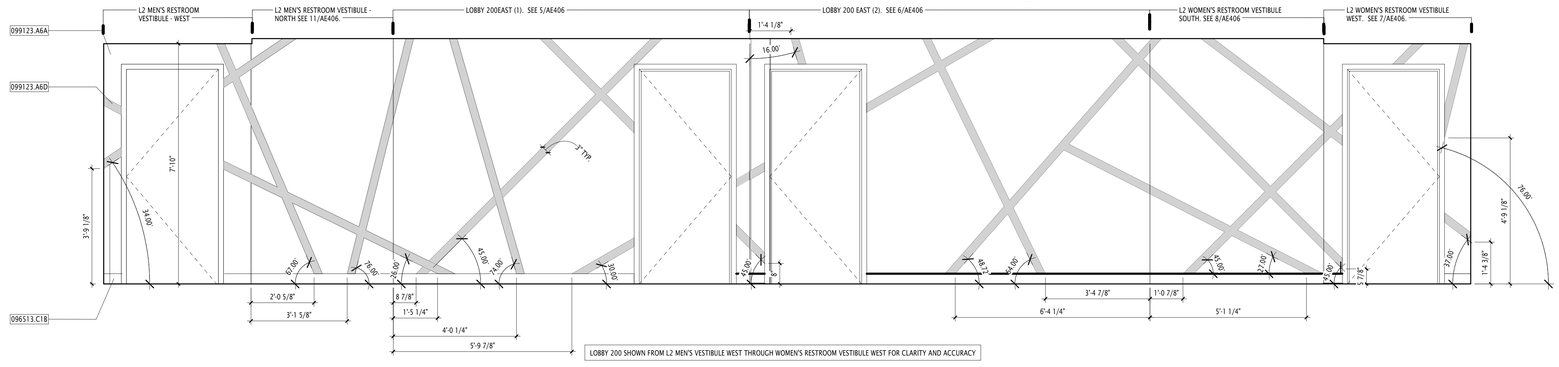

4 AE406 L2 MEN'S RR VEST. - WEST / L2 MEN'S RR VEST. - NORTH / LOBBY 200 - EAST (1) / LOBBY 200 - EAST (2) / L2 WOMEN'S RR VEST. - SOUTH / L2 WOMEN'S RR VEST. - WEST
1/2" = 1'-0"

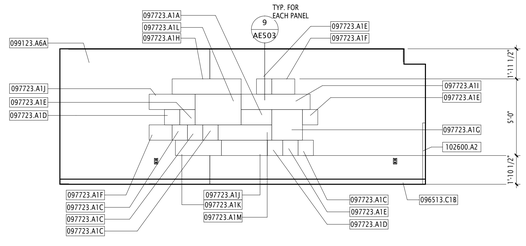

3 AE406 LOBBY / HALLWAY 200 - EAST
1/4" = 1'-0"

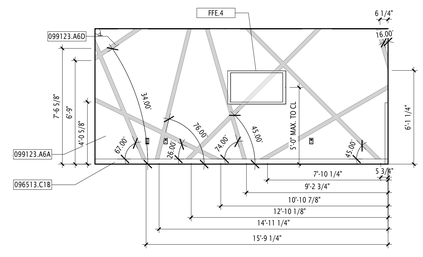

2 AE406 STUDENT GATHERING 232 - NORTH
1/4" = 1'-0"

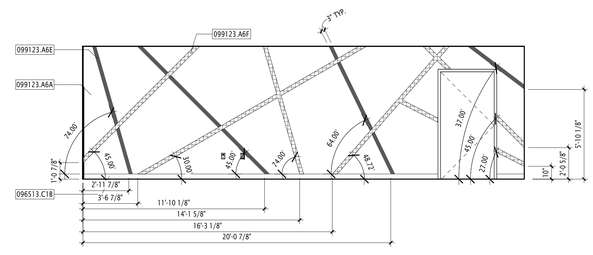

1 AE406 STUDENT GATHERING 200C - WEST (1)
1/4" = 1'-0"

STATE OF UTAH
BRADLEY SHAW
5668347-0301
03/09/2015
LICENSED ARCHITECT

WSU DAVIS CAMPUS D13 REMODEL

875 SOUTH UNIVERSITY PARK BLVD.
CLEARFIELD, UT 84041

DFCM

4110 STATE OFFICE BUILDING 450 NORTH
STATE STREET SALT LAKE CITY, UT 84114

OWNER PROJECT NO.:	14297810
GSBS PROJECT NO.:	2014.095.00
ISSUED DATE:	03/09/2015

INTERIOR ELEVATIONS

AE406

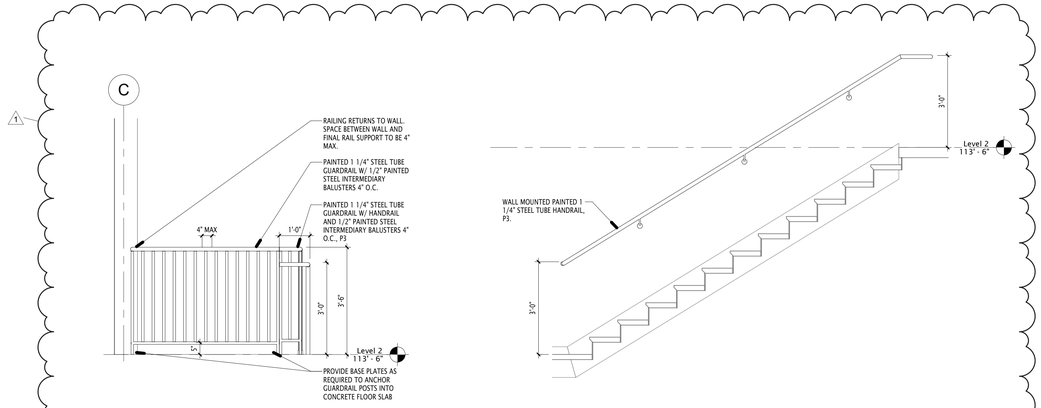

12 AE500 GUARDRAIL @ 199 T.O. STAIR
1/2" = 1'-0"

11 AE500 STAIR HANDRAIL ELEVATION - 199
1/2" = 1'-0"

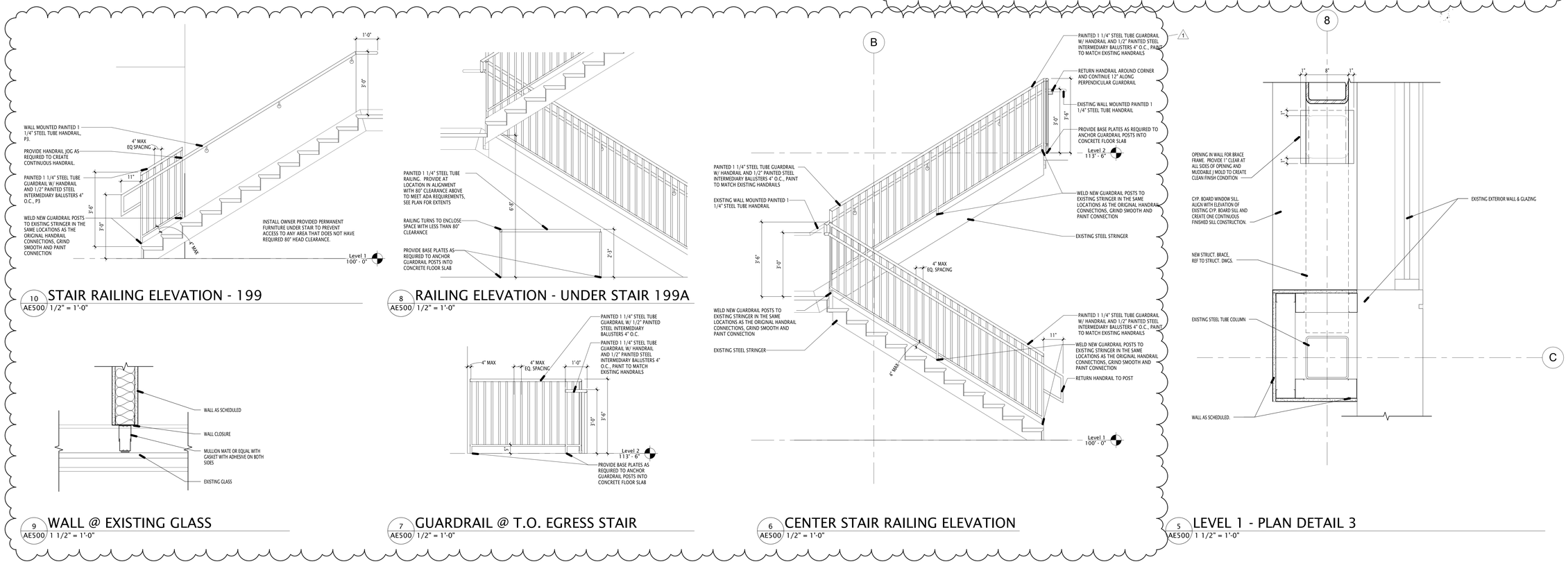

10 AE500 STAIR RAILING ELEVATION - 199
1/2" = 1'-0"

8 AE500 RAILING ELEVATION - UNDER STAIR 199A
1/2" = 1'-0"

9 AE500 WALL @ EXISTING GLASS
1 1/2" = 1'-0"

7 AE500 GUARDRAIL @ T.O. EGRESS STAIR
1/2" = 1'-0"

6 AE500 CENTER STAIR RAILING ELEVATION
1/2" = 1'-0"

5 AE500 LEVEL 1 - PLAN DETAIL 3
1 1/2" = 1'-0"

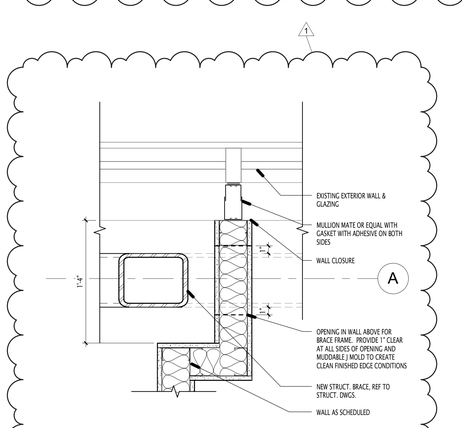

4 AE500 WALL @ EXISTING MULLION DETAIL
1 1/2" = 1'-0"

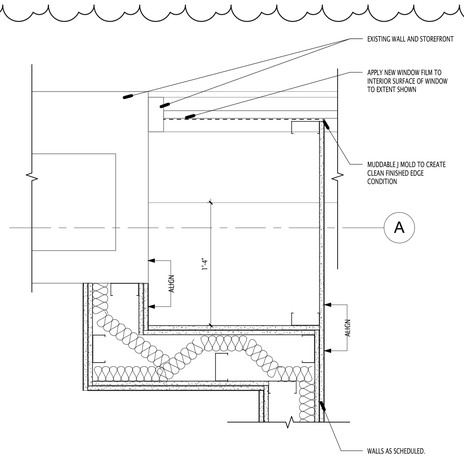

3 AE500 LEVEL 1 - PLAN DETAIL 2
1 1/2" = 1'-0"

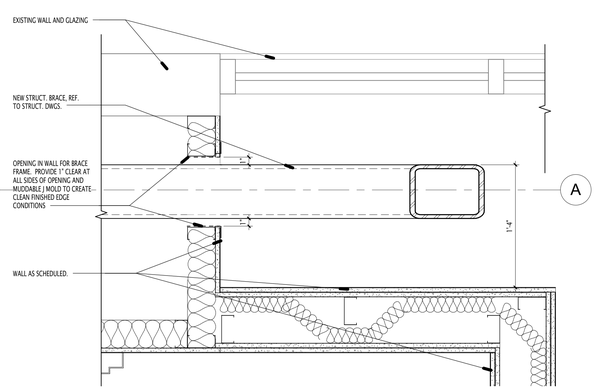

2 AE500 LEVEL 1 - PLAN DETAIL 1
1 1/2" = 1'-0"

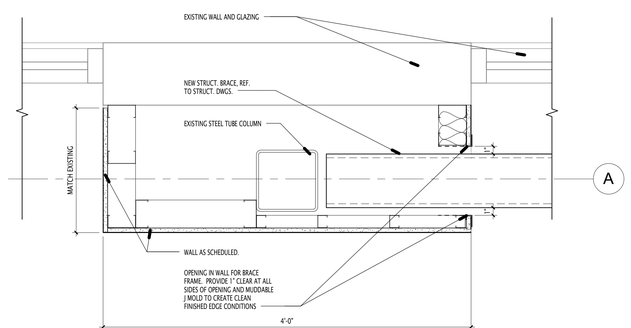

1 AE500 TYPICAL BRACED FRAME WALL PENETRATION DETAIL
1 1/2" = 1'-0"

GSBS ARCHITECTS
375 WEST 200 SOUTH
SALT LAKE CITY, UT 84101
P 801.521.8600
F 801.521.7913
www.gsbsarchitects.com

REVISIONS:

1	03/27/2015	Addendum #1

STATE OF UTAH
CHAD M. SHOW
5668347-0301
03/09/2015
LICENSED ARCHITECT

WSU DAVIS CAMPUS D13 REMODEL

875 SOUTH UNIVERSITY PARK BLVD.
CLEARFIELD, UT 84041

DFCM

4110 STATE OFFICE BUILDING 450 NORTH
STATE STREET SALT LAKE CITY, UT 84114

OWNER PROJECT NO.:	14297810
GSBS PROJECT NO.:	2014.095.00
ISSUED DATE:	03/09/2015

PLAN DETAILS

AE500

1. Design Criteria

1.1. Governing Building Code: 2012 International Building Code (IBC), 2012 International Existing Building Code (IEBC), ASCE 41-13 Seismic Evaluation and Retrofit of Existing Buildings
A. Risk Category: III

1.2. Floor Live Loading:
A. Office: ..... 60 psf Live Load + 20 psf Partition Load
B. Classrooms: ..... 60 psf Live Load + 20 psf Partition Load
C. Corridors above the First Floor ..... 80 psf Live Load
D. Penthouse: ..... 75 psf Live Load

1.3. Roof Live Loading:
A. Roof Snow Load: ..... 33 psf
1. Ground Snow Load, P_g: ..... 43 psf
2. Snow Exposure Factor, C_e: 1.0
3. Importance Factor, I_s: 1.1
4. Thermal Factor, C_t: 1.0

1.4. Earthquake:
A. Seismic Design Category..... D
B. Spectral Response Accelerations (IBC 2012):
S_S = 1.374 g S_{DS} = 0.916 g
S_1 = 0.469 g S_{D1} = 0.479 g
C. Spectral Response Accelerations (ASCE 41-13, BSE-2N):
S_{XS} = 1.374 g
S_{X1} = 0.718 g
D. Spectral Response Accelerations (ASCE 41-13, BSE-1N):
S_{XS} = 0.916 g
S_{X1} = 0.479 g
E. Soil Site Class: ..... D
F_a = 1.000 F_v = 1.531
F. Basic Seismic-Force-Resisting System: ..... Steel Buckling-Restrained Braced Frames
R = 8 C_d = 5 Ω_0 = 2.5
G. Importance Factor, I_E: 1.25
H. Design Base Shear (IBC 2012): ..... 173 kips
I. Design Base Shear (ASCE 41-13): ..... 1131 kips
J. Design Story Drift, Δ:..... 7 in
K. Analysis Procedure: ..... Modal Response Spectrum Analysis

1.5. Wind:
A. Ultimate Design Wind Speed V_{ult}: ..... 120 mph
B. Exposure: C
C. Internal Pressure Coefficient, GC_{pi}: 0.18
D. Topographic Factor, K_{lt}: 1.0
E. Components and Cladding Design Pressure:

Design Wind Pressure (psf)

Location		Tributary Area (ft^2)			
		< 10	50	100	> 500
Walls	Within 7.5 ft of building corner	46	39	36	29
	All other areas	38	34	33	29
Roof	Within 7.5 ft of building corner	96	58	41	41
	Within 7.5 ft of building edge	64	48	41	41
	All other areas	38	36	35	35

1.6. Foundation:
A. Subsurface Conditions:
Soils report and log of borings was obtained by the Owner for the Engineer's use in the design of the foundation, and is not a part of the Contract Documents. This report and log of borings is available for the Contractor's information, but is not a warranty of the subsurface conditions. The Contractor may use the report at his own risk.
B. Soils Report by AGEC, dated December 22, 2000.
C. Soil Bearing Pressure: ..... 2000 psf

2. Earthwork

2.1. Proof rolling: The natural undisturbed soil below all footings shall be proof rolled prior to placing concrete. Remove all soft spots and replace with compacted structural fill.

2.2. Compacted structural fill: All fill material shall be a well-graded granular material with a maximum size less than 4 inches and with not more than 10 percent passing a No. 200 sieve. It shall be compacted to 95 percent of the maximum laboratory density as determined by ASTM D1557. All fill shall be tested (See Specifications and the Quality Assurance section of the GSN).

3. Concrete

3.1. Materials shall comply with the Standards specified in American Concrete Institute (ACI) 318-11, "Building Code Requirements for Structural Concrete."
A. Concrete mix design requirements shall be as follows:

Location	f'c at 28 days (psi)	Max W/C Ratio	Air Content (%)	Max Aggregate Size	Exposure Classes*		
					F	S	C
Footings / Grade Beams / Piers	4000	0.45	-	¾"	F0	S0	C0
Interior Slabs on Grade	3000	0.50	-	1"	F0	S0	C0
Concrete Over Metal Deck	3000	0.50	-	¾"	F0	S0	C0

* Exposure Classes are per ACI 318, Section 4.2.1, where F, S and C are exposure categories for freezing and thawing, sulfate, and corrosion protection of reinforcement, respectively.

B. Cementitious Materials:
1. Portland Cement (ASTM C150):
a. Type I or II for exposure class S0.
b. Type II or V for exposure class S1.
c. Type V for exposure class S2 and S3.
2. Fly Ash (ASTM C618, Class C or F): maximum fly ash content as a percentage of total weight of cementitious materials shall be 25 percent.
C. Concrete Density (Maximum Air Dry Weight):
1. Normal weight concrete shall be approximately 145 to 155 pounds per cubic foot. Aggregate shall be ASTM C33.
D. Steel Reinforcement:
1. ASTM A615 Grade 60, fy = 60,000 psi min. unless noted otherwise.
E. Fiber Reinforcement:
1. Macrosynthetic Fibers: monofilament, non-fibrillating fibers made of a polypropylene/ polyethylene blend. Macro fibers shall comply with ASTM C 1116, Type III, and meet the criteria of ASTM D 7508.
a. Macrosynthentic fibers shall be added to concrete over steel deck at a dosage rate determined by the fiber manufacturer but not less than 4 lb/cu yd as noted in the Steel Roof Deck section of these notes.
b. Do not burn off exposed fibers.
F. Admixtures:
1. Air-entraining admixtures, comply with ASTM C 260 (when used).
a. Tolerance on air content as delivered shall be +/- 1.5%.
b. When air content of a trowel finished floor slab exceeds 3%, there is an increased risk for delaminations and blistering to occur. When this situation is present, the contractor shall pay special attention to the finishing procedures to help minimize such risks. Refer to ACI 302.1R-96 "Guide for Concrete Floor and Slab Construction" for proper finishing guidelines.
2. The use of super plasticizers and water reducers is allowed, but not required.
3. Calcium chloride or admixtures containing calcium chloride shall not be added to the concrete mix.
G. Chloride Ion: Maximum water soluble chloride ion concentrations in hardened concrete at age between 28 and 42 days contributed from the ingredients including water, aggregates, cementitious materials, and admixtures shall not exceed a maximum, by weight of cement, of 1.00% for concrete with exposure class C0, 0.30% for concrete with exposure class C1, 0.15% for concrete with exposure class C2, and 0.06% for all prestressed concrete.
H. Slump Limit: 4 inches, maximum for all concrete prior to the addition of plasticizers and water reducing admixtures. The concrete supplier shall indicate the final slump of each concrete mix in the submitted mix design.
I. Shrinkage Limit: Interior slabs on grade shall have a drying shrinkage limit of 0.040 percent tested in accordance with ASTM C157. Drying shrinkage test results shall be submitted with mix designs.
J. Only one grade or type of concrete shall be poured on the site at any given time.

3.2. Formwork shall comply with ACI Standards Publication 347 and the project specifications. The contractor shall be responsible for the design, detailing, care, placement and removal of the formwork and shores.

3.3. Concrete cover requirements for deformed bar reinforcing steel shall comply with ACI 318, "Building Code Requirements for Structural Concrete".
A. Cast-in-place Concrete: Specified Cover
1. Cast against and permanently exposed to earth: ..... 3"
2. Formed concrete exposed to earth or weather:
#6 thru #18 bars ..... 2"
#5 and smaller bars..... 1.1/2"
3. Concrete not exposed to weather or in contact with ground:
Slabs, Walls, Joists; #11 bars and smaller ..... 3/4"
Beams, Columns: primary reinforcement, ties, stirrups, spirals ..... 1.1/2"

3.4. Construction Joints and Control Joints:
A. Provide a surface intentionally roughened to ¼" amplitude in all wall footings. A continuous keyway shall not be used for concrete shear wall to footing connections, unless specifically indicated. Refer to project plans, schedules and details for the shear wall to footing connection requirements.
B. All horizontal and vertical construction joints shall have a surface intentionally roughened to ¼" amplitude. A continuous 2 X 4 keyway may be used on elements other than shear walls.
C. Provide reinforcement dowels to match the member reinforcement across the joint, unless noted otherwise. For dowels across construction joints and wall to footing connections of concrete shear walls, refer to specific project plans, schedules, and details.
D. Slabs on grade shall have construction or control joints spaced not to exceed 30 times the slab thickness in any direction.
E. Control joints shall be installed in slabs on grade so the length to width ratio of the slab is no more than 1.25:1. Control joints shall be completed within 12 hours of concrete placement. See typical details for joint configuration.

3.5. Detailing: All reinforcing, including welded wire fabric, shall be detailed, bolstered & supported to comply with ACI 315, "Details and Detailing of Concrete Reinforcement" and the Concrete Reinforcing Steel Institute (CRSI) recommendations. Reinforcing bars shall not be welded unless specifically shown on drawings.
A. Lap splice lengths shall be detailed to comply with the CONCRETE REINFORCING BAR DEVELOPMENT AND LAP SPLICE SCHEDULE.
B. All embedded elements and dowels shall be securely tied to formwork or to adjacent reinforcing prior to the placement of concrete.
C. Use chairs or other support devices recommended by CRSI to support and tie reinforcement bars and welded wire fabric prior to placing concrete. Welded wire fabric shall be continuously supported at 36" o.c. maximum.
D. Contractor shall coordinate placement of all openings, curbs, dowels, sleeves, conduits, bolts, inserts and other embedded items prior to concrete placement.
E. All reinforcement shall be bent cold, and shall be bent only once at the same location. All reinforcement shall be shop bent, unless otherwise permitted by the engineer.

3.6. No aluminum conduit or product containing aluminum or any other material injurious to concrete shall be embedded in concrete.

3.7. Unless otherwise noted, all slabs on grade shall be 4" thick.

4. Structural Steel

4.1. Material:
A. W-Shapes: ASTM A992, (F_y = 50 ksi), except as noted otherwise.
B. All Other Shapes and Plates: ASTM A36 (Fy = 36 ksi), except as noted otherwise.
C. Rectangular and Square Hollow Structural Sections (HSS): ASTM A500, Grade B (Fy = 46 ksi).
D. Round HSS: ASTM A500, Grade B (Fy = 42 ksi).
E. Steel Pipe: ASTM A53, Grade B (Fy = 35 ksi).
F. Deformed Bar Anchors (DBA): ASTM A496.
G. Headed Stud Anchors (HSA): ASTM A108, with dimensions complying with AISC specifications.
H. Anchor Rods: ASTM F1554, Grade 105 with ASTM A563 heavy hex nuts and ASTM F436 hardened washers, unless noted otherwise.
I. Structural steel that is part of the seismic force resisting system shall be supplied with minimum Charpy V-Notch impact test results of 20 ft-lbs. absorbed energy at 70 degrees Fahrenheit, indicated below:
1. Hot rolled shapes with flanges 1.1/2" thick and thicker tested in the alternate core location as described in ASTM A6 Supplementary requirement S30.
2. Plates 2" and thicker measured at any location permitted by ASTM A673.
3. Test Frequency: Each heat.

4.2. Fabrication and construction shall comply with the following Codes and Standards:
A. American Institute of Steel Construction (AISC) 360-10, "Specification for Structural Steel Buildings."
B. AISC 341-10, "Seismic Provisions for Structural Steel Buildings."
C. AISC 303-10, "Code of Standard Practice for Steel Buildings and Bridges" excluding the following: Section 3.3 (last sentence of first paragraph), Section 4.4, Section 4.4.1, Section 4.4.2, Section 4.5, and Section 7.13.3.
1. The architectural drawings are the prime contract drawings. Consultants' drawings by other disciplines are supplementary to the architectural drawings. The structural drawings shall be used in conjunction with the architectural drawings. Detailing and shop drawing production for structural elements will require information (including dimensions) contained in architectural, structural, and/or other consultants' drawings. Refer to the Special Instructions section of the general notes, below.
D. AISC/RCSC 2009, "Specification for Structural Joints Using ASTM A325 or A490 Bolts"
E. American Welding Society (AWS) D1.1:2010, "Structural Welding Code – Steel" (specific items do not apply when they conflict with the AISC requirements).
F. American Welding Society (AWS) D1.8:2009, "Structural Welding Code – Seismic Supplement" (specific items do not apply when they conflict with the AISC requirements).

4.3. Structural shapes and plates shall be fabricated from newly rolled (milled) one-piece sections without splices, unless specifically noted otherwise on the structural drawings. Connections for structural steel shall comply with the structural drawings, unless written approval is given by the structural engineer.

4.4. Welding:
A. It is recommended the steel erection contractor and steel fabricator contact the Quality Assurance Agency prior to beginning any welds. A program of joint preparation and welding procedures should be worked out between the two parties before the welding is started so that correct welds will be made from the beginning.
B. Certification of Welders: All shop and field welding shall be executed by AWS certified welders who have been specifically certified for the process of welding being performed. The welder's certification will be considered as being current unless the welder is not engaged in the process of welding being performed for a period exceeding six months or there is a specific reason to question a welder's ability as required by AWS. Certification and records must comply with AWS Standards. Certification and appropriate records must be provided to the architect prior to beginning work.
C. Electrodes: E-70 XX or as noted otherwise. E60 XX may be used for welding steel floor and roof decks.
D. Minimum Welds: All intersecting steel shapes that are not bolted shall be connected by a fillet weld all around, unless noted otherwise. Fillet weld sizes that are not shown shall be 1/16" less than the thinnest of the connected parts for thicknesses 1/4" and larger. Fillet welds on plates less than 1/4" shall be of the same size as the thinnest of the connected parts.
E. Reinforcing Bars: Do not weld rebar except as specifically detailed in the drawings. In such cases, use only AWS standards. Do not substitute reinforcing bars for deformed bar anchors (DBAs), machine bolts, or headed stud anchors (HSAs).
F. Bolts: Do not apply any welds, including "tack" welds to bolts, including anchor bolts, except as specifically detailed in the drawings.
G. Headed Stud Anchor (HSA) welding and Deformed Bar Anchor (DBA) welding shall conform to the manufacturer's specifications. Welding shall comply with AWS D1.1 Section 7.6 through 7.9 and Annex G.
H. Special Provisions for Welds in the SFRS (Seismic Force Resisting System): Welds used in members and connections of braced frames and collector elements shall comply with these requirements. Welding methods, procedures and quality control shall comply with AISC 341 Chapter J, AWS D1.1, AWS D1.8 and the following:
1. Demand Critical Welds: The following CJP groove welds are demand critical and shall comply with the special requirements for Demand Critical Welds.
a. Column bases in braced frames.
b. Other welds designated as demand critical in the drawings.
2. Welding shall be performed in accordance with AISC 341 Chapter J and a welding procedure specification (WPS) as required in AWS D1.1. WPS variables shall be within the parameters established by the filler metal manufacturer. WPS for demand critical welds shall also comply with AWS D1.8 Section 6.1.
3. Consumables for Welding:
a. Welds used in members and connections of the SFRS shall be made with filler metals meeting the requirements specified in section 6.3 of AWS D1.8.
b. Filler metal properties shall be as follows:

Property	70 ksi Classification	80 ksi Classification
Yield Strength, ksi	58 min	68 min
Tensile Strength, ksi	70 min	80 min
Elongation (%)	22 min	19 min
CVN Toughness, ft-lbf	20 min @ 0 degrees F	20 min @ 20 degrees F

c. Filler metals in Demand Critical Welds shall receive Heat Input Testing that achieves the properties listed above with CVN toughness of 40 ft-lbf min @ 70 degrees F and shall comply with AWS D1.8 section 6.3.5 to 6.3.8.
d. Diffusible Hydrogen: Welding electrodes and electrode-flux combinations shall meet the requirements of AWS D1.8 Table 6.3. The manufacturer's Certificate of Conformance shall be considered adequate proof of this requirement.
e. Intermixed filler metals shall meet the requirements of AWS D1.8 section 6.3.4.
4. Details and treatment of weld tabs shall be per AWS D1.8 Section 6.11. Use weld tabs as specified in AWS D1.1 Section 5.31 except at the end of CJP welds adjacent to the column web/flange juncture at continuity plates. Remove weld tabs to within 1/8 inch of the base metal surface after welding. Where weld tabs are used at continuity plates, remove them to within 1/4 inch of the base metal surface after welding. Finish the edge where weld tabs are removed to a surface roughness of 500 micro-inches.
5. CJP joints in members with different thickness or widths (such as column splices) shall be transitioned in a manner that the slope in the transition does not exceed 1 in 2.1/2. The transition shall be accomplished by chamfering the thicker part, tapering the wider part, sloping the weld metal, or by a combination of these.
6. Preheat, and interpass temperatures shall comply with AWS D1.1 Section 3.5 and AWS D1.8 Section 6.5.
7. Additional welding provisions applicable to demand critical welds only are as follows:
a. Welding processes shall comply with AWS D1.8 Section 6.2.
b. Filler metal packaging and exposure limitations shall comply with AWS D1.8 Section 6.4.
8. Tack welds shall comply with AWS D1.1 Section 5.18 and AWS D1.8 Section 6.6 and 6.16. Tack welds attaching backing bars and weld tabs at demand critical welds shall be placed where they are incorporated into a final weld.
9. Imperfections such as cracks, gouges, grooves, arch strikes and notches will not be permitted within the Protected Zone. Imperfections within the Protected Zone shall be repaired or removed in accordance with AWS D1.8 Section 6.15.4.
10. Braced Frame Welding: Lengths shown for fillet welds at brace-to-gusset, gusset-to-baseplate, and column-to-gusset connections are minimums, intended for establishing gusset plate dimensions. Weld entire contact length at these joints, typical.

4.5. Bolted Connections:
A. Provide snug tightened joints with ASTM A325N Type 1 bolts for steel to steel connections, as noted herein or as noted on the drawings. Snug tightened joints shall be used in connections for simple span framing and beam (or girder) to bearing plate connections. The snug tightened condition is usually attained by a few impacts of an impact wrench or the full effort of a man using an ordinary spud wrench. Bolts shall be tightened until all plies of the joint are in firm contact.
B. Provide hardened washers beneath the turned element of all bolts or nuts. Provide hardened beveled washers, to compensate for the lack of parallelism, where the outer face of the bolted parts has a slope greater than one in twenty with respect to the plane normal to the bolt axis. Hardened washers or plates installed over oversized holes or slotted holes shall be at least 5/16" thick and shall conform to ASTM F436. Plates or bars installed at slotted holes shall have a size sufficient to completely cover the slot after installation.
C. Where a steel to steel beam connection is not detailed in the drawings, provide a standard AISC framed connection with the capacity to support one half of the total uniform load capacity of the given shape for the span and for the steel specified.
D. Bolts, nuts and washers shall not be reused.

4.6. Steel Roof Deck:
A. Steel roof deck shall comply with the latest requirements of the Steel Deck Institute (SDI). Submit ICC Code Evaluation Report with load and lateral shear capacities with shop drawings.
B. Steel roof deck shall be 1 1/2" deep X 18 Gauge minimum galvanized (G60), type "B" wide rib deck with interlocking side seams with the following properties:

	18 Gauge
Minimum S (in^3/ft) =	0.331
Minimum I (in^4/ft) =	0.302

C. A 4" thick (5 1/2" overall) normal weight concrete (f'c = 3,000 psi @ 28 days unless noted otherwise) slab shall be poured over the steel deck. Reinforce slab using one of the following:
1. Macrosynthetic fiber reinforcement per the concrete materials section of the General Structural Notes.
D. Weld steel roof deck to supporting framing members with 3/4" diameter puddle welds at the following spacings (Closer spacings may be used to develop minimum shear requirements.):
1. 6" o.c. to all supports perpendicular to deck corrugations (7 welds per 36" sheet).
2. 6" o.c. to supports parallel to deck corrugations.
3. All welded surfaces shall be dry before welding deck to supports.
E. Attach interlocking seams with 1 1/2" long top seam welds at 12" o.c. minimum between adjacent pieces of decking. Crimp side seams before welding. Closer spacings may be used to develop minimum shear requirements.
F. Alternate means of deck attachment and fastening using screws, pins or other mechanical fastening methods are permitted with approval of the engineer. The contractor shall submit the proposed attachment system and the code evaluation report demonstrating the system has the required strength. If the alternate attachment method is approved, it is the responsibility of the contractor to ensure that the deck type and profile is compatible with the fastening system being used.
G. Provide a 2" minimum bearing and a 4-inch lap at the splice points of all pieces of deck.
H. Steel roof deck shall not be used to support loads from plumbing, HVAC ducts, light fixtures, architectural elements or equipment of any kind, unless specifically noted otherwise. Lightweight suspended acoustical ceilings with a total weight per wire not exceeding 50# may be hung from the steel roof deck. The hangers should be staggered to distribute the load over multiple deck flutes.

5. Special Instructions

5.1. The project specifications are not superseded by the General Structural Notes but are intended to be complementary to them. Consult the specifications for additional requirements in each section. Notes and specific details on the drawings shall take precedence over General Structural Notes and typical details.

5.2. The architectural drawings are the prime contract drawings. Consultant drawings by other disciplines are supplementary to the architectural drawings. All omissions or conflicts, including dimensions, between the various elements of the consultants' drawings and/or specifications shall be brought to the attention of the Architect before proceeding with any work involved. In case of conflict, follow the most stringent requirement as directed by the Architect without additional cost to the owner. Any work done by the contractor after discovery of such discrepancy shall be done at the contractor's risk.

5.3. The structural drawings shall be used in conjunction with the architectural drawings. Primary structural elements and overall structural layout are indicated within the structural plans and details. Some secondary elements, architectural layouts, alcoves, elevations, slopes, depressions, curbs, mechanical equipment, and electrical equipment, are not indicated within the structural drawings. Detailing and shop drawing production for structural elements will require information (including dimensions) contained in the architectural, structural and/or other consultants' drawings.

5.4. Shoring and Bracing Requirements:
A. Floor and Roof Structures -- The General Contractor is responsible for the method and sequence of all structural erection. He shall provide temporary shoring and bracing as his method of erection requires to provide adequate vertical and lateral support. Shoring and bracing shall remain in place as the chosen method requires until all permanent members are in place and all final connections are completed, including all roof and floor attachments. The building shall not be considered stable until all connections are complete.
B. Foundation walls must be braced until the complete floor or roof systems is completed. Do not backfill until floor or roof systems are in place.
C. Walls above grade shall be braced until the structural system is complete. Walls shall not be considered to be self-supporting.

5.5. All expansion joints (E.J.) shown in the structural drawings shall be considered seismic separation joints, unless noted otherwise.

5.6. Submittals: A copy of all shop drawings that have been submitted for review must be kept at the construction site for reference. These drawings must bear the appropriate review stamps. The shop drawing review shall not relieve the contractor of the responsibility of completing the project according to the contract documents. The general contractor shall review and mark all shop drawings prior to submitting them to the Architect for his review. Shop Drawings made from reproductions of (these) contract drawings will be rejected.

5.7. Project Coordination: It shall be the responsibility of the general contractor to coordinate with all trades any and all items that are to be integrated into the structural system. Openings or penetrations through, or attachments to the structural system that are not indicated on these drawings shall be the responsibility of the general contractor and shall be coordinated with the Architect/Engineers. The order of construction is the responsibility of the general contractor. It is the contractor's obligation to provide all items necessary for his chosen procedure.

5.8. Contractor shall field verify all dimensions, and conditions. If the contract drawings do not represent actual conditions, contractor shall notify architect/engineer prior to fabrication or construction within that area.

5.9. Notice of Copyright: The structural drawings, plans, schedules, notes and details are hereby copyrighted by Reaveley Engineers and Associates, Inc., All Rights reserved. Submission or distribution of documents to meet official regulatory requirements or for similar purposes in connection with the project is not to be construed as publication in derogation of Reaveley Engineers and Associates, Inc.'s reserved rights. The documents defining the structure are instruments of service prepared by Reaveley Engineers and Associates, Inc. for one use only. Furthermore, these documents shall not be reproduced, or copied, in whole or in part by the contractor or his subcontractors for preparation of shop drawings or other submittals.

6. Quality Assurance

6.1. Quality Assurance Agency Requirements:
A. The Owner shall engage a qualified Quality Assurance Agency (QAA) to provide all special inspection and quality assurance testing for the project. The QAA shall provide all information necessary for the building official to determine that the agency meets the applicable requirements
1. The QAA shall be objective, competent and independent from the contractor responsible for the work being inspected. The agency shall also disclose possible conflicts of interest to confirm objectivity.
2. The QAA shall have adequate equipment to perform required tests.
3. The QAA shall employ experienced personnel educated in conducting, supervising and evaluating tests and/or inspections. Experience or training shall be considered relevant when the documented experience or training is related in complexity to the same type of special inspection activities for projects of similar complexity and material qualities.
4. Prior to the start of construction, the QAA shall submit to the building official, the owner architect and engineer copies of the following:
a. Current calibration records for all equipment to be used for the work being inspected and/or tested.
b. Current certification and training records for each individual performing the inspections and/or testing.
c. Sample inspection and testing reports and the distribution list for the records.
d. Proposed inspection procedures and frequency for each inspection required by the work.
e. Proposed testing methods and frequency of testing required by the work.
5. The QAA shall send copies of all inspection and testing reports to the building official, owner, architect, engineer and contractor. Reports shall indicate that the work inspected was or was not completed in conformance to the approved construction documents. Discrepancies shall be brought to the immediate attention of the contractor for correction. If they are not corrected, the discrepancies shall be brought to the attention of the building official, architect and engineer.
6. The QAA shall submit a final report documenting required special inspections and correction of any discrepancies noted in the inspections. The final report shall be distributed to the building official, owner, architect and engineer in a timely manner prior to the completion of the project.

6.2. Contractor Responsibilities:
A. Each contractor responsible for the construction of a system or component requiring special inspections or testing shall submit a written statement of responsibility to the building official, owner, architect and engineer prior to the commencement of the work. The contractor's statement of responsibility shall contain the following:
1. Acknowledgement of awareness of the special requirements defined in the statement of special inspections.
2. Acknowledgement that control will be exercised in order to obtain conformance to the approved construction documents.
3. Contractor's internal quality control procedures, methods and measures to be used in order to obtain conformance to the approved construction documents. Include copies of quality control reports, frequency of reporting and distribution of reports.
4. Identification and qualifications of the person(s) responsible for quality control and their position(s) within the organization.
B. Notification of Engineer: The contractor shall notify the engineer twenty-four hours prior to:
1. Placing concrete in any footing, mat footing, deep foundation, grade beam, or pier.
2. Closing any wall forms.
3. Placing concrete in any column, beam or suspended slab.
4. Completing the structural steel framing.
C. Notification of QAA: The contractor shall notify the QAA in a timely manner so that inspection and testing may be performed as outlined in the statement of special inspections.

6.3. Structural Observations by the Engineer of Record.
A. The Engineer of Record will perform structural observations at critical phases of the project. Copies of the engineer's report will be distributed to the architect, contractor, owner, and building official.
B. Observation visits to the site by the Engineer's field representatives shall not be construed as inspection or approval of construction.

GSBS ARCHITECTS
375 WEST 200 SOUTH
SALT LAKE CITY, UT 84101
P 801.521.8600
F 801.521.7913
www.gsbsarchitects.com

REVISIONS:

WSU DAVIS CAMPUS D13 REMODEL

875 SOUTH UNIVERSITY PARK BLVD.
CLEARFIELD, UT 84041

DFCM

4110 STATE OFFICE BUILDING 450 NORTH STATE STREET SALT LAKE CITY, UT 84114

OWNER PROJECT NO.:	14297810
GSBS PROJECT NO.:	2014.095.00
ISSUED DATE:	03/09/2015

GENERAL STRUCTURAL NOTES

SE001

7. Statement of Special Inspections

7.1. The following materials, systems and components require special inspection or testing per Chapter 17 of the International Building Code (IBC).

7.2. For items requiring continuous inspection, a special inspector must be present onsite during the performance of that task. In most cases, periodic inspections/tests shall be performed prior to commencing the task, intermittently during the task, and at the completion of the task.

Structural Steel per IBC Section 1705.2.1, 1705.11.1 & 1705.12.2

Item	Frequency	Detailed Instructions
Prior to Welding (Table N5.4-1, AISC 360-10):		
Verify welding procedures (WPS) and consumable certificates	Continuous	
Material identification	Periodic	Verify type and grade of material.
Welder identification	Periodic	A system shall be maintained by which a welder who has welded a joint or member can be identified.
Fit-up groove welds	Periodic	Verify joint preparation, dimensions, cleanliness, tacking, and backing.
Access holes	Periodic	Verify configuration and finish.
Fit-up of fillet welds	Periodic	Verify alignment, gaps at root, cleanliness of steel surfaces, and tack weld quality and location.
During Welding (Table N5.4-2, AISC 360-10):		
Use of qualified welders	Periodic	Verify that welders are appropriately qualified.
Control and handling of welding consumables	Periodic	Verify packaging and exposure control.
Cracked tack welds	Periodic	Verify that welding does not occur over cracked tack welds.
Environmental conditions	Periodic	Verify win speed is within limits as well as precipitation and temperature.
WPS followed	Periodic	Verify items such as settings on welding equipment, travel speed, welding materials, shielding gas type/flow rate, preheat applied, interpass temperature maintained, and proper position.
Welding techniques	Periodic	Verify interpass and final cleaning, each pass is within profile limitations, and quality of each pass.
After Welding (Table N5.4-3, AISC 360-10):		
Welds cleaned	Periodic	Verify that welds have been propyl cleaned.
Size, length, and location of welds	Continuous	
Welds meet visual acceptance criteria	Continuous	
Arc strikes	Continuous	
k-area	Continuous	
Backing & weld tabs removed	Continuous	
Repair activities	Continuous	
Document acceptance or rejection of welded joint/member	Continuous	
Nondestructive Testing (Section N5.5, AISC 360-10):		
CJP welds (Risk Cat. III or IV)	Continuous	A reduction in the rate of ultrasonic testing is allowed per Section N5.5e.
Welded joints subject to fatigue	Continuous	
Prior to Bolting (Table N5.6-1, AISC 360-10):		
Certifications of fasteners	Continuous	
Fasteners marked	Periodic	Verify that fasteners have been marked in accordance with ASTM requirements.
Proper fasteners for joint	Periodic	Verify grade, type, and bolt length if threads are excluded from the shear plane.
Proper bolting procedure	Periodic	Verify proper procedure is used for the joint detail.
Connecting elements	Periodic	Verify appropriate faying surface condition and hole preparation, if specified, meet requirements.

Item	Frequency	Detailed Instructions
Pre-installation verification testing	Periodic	Observe and document verification testing by installation personnel for fastener assemblies and methods used.
Proper storage	Periodic	Verify proper storage of bolts, nuts, washers, and other fastener components.
During Bolting (Table N5.6-2, AISC 360-10):		
Fastener assemblies	Periodic	Verify that fastener assemblies are of suitable condition, paced in all holes, and washers are positioned as required.
Snug-tight prior to pretensioning	Periodic	Verify that joints are brought to snug-tight condition prior to pretensioning operation.
Fastener component	Periodic	Verify that fastener component is not turned by wrench prevented from rotating.
Pretensioned fasteners	Periodic	Verify that fasteners are Pretensioned in accordance with RCSC Specification, progressing systematically from the most rigid point toward the free edges.
After Bolting (Table N5.6-3, AISC 360-10):		
Document acceptance or rejection of bolted connections	Continuous	
Other Steel Inspections (Section N5.7, AISC 360-10: Table J8-1, J10-1, AISC 341-10):		
Structural steel details	Periodic	All fabricated steel or steel frames shall be inspected to verify compliance with the details shown in the construction documents, such as braces, stiffeners, member locations, and proper application of joint details at each connection.
Anchor rods and other embedments supporting structural steel	Periodic	Shall be on the premises during the placement of anchor rods and other embedments supporting structural steel for compliance with construction documents. Verify the diameter, grade, type, and length of the anchor rod or embedded item, and the extent or depth of embedment prior to placement of concrete.
Protected zones	Periodic	Verify that no holes or unapproved attachments are made within the protected zone *(see Table J8-1 of AISC 341-10).*
Steel Elements of Composite Construction (Table N6.1, AISC 360-10; Tables J9-1 thru J9-3, AISC 341-11):		
Document acceptance or rejection of steel elements	Continuous	
Reinforcing steel	Periodic	Verify appropriate reinforcement size, spacing, and orientation; that it has not been re-bent in field; that it is correctly tied and supported; and that required steel clearances have been provided.
Composite member size	Periodic	Verify that composite member is the required size.

Concrete Construction per IBC Sections 1705.3 &1705.12.1

Item	Frequency	Detailed Instructions
Reinforcing steel	Periodic	Verify prior to placing concrete that reinforcing is of specified type, grade and size; that it is free of oil, dirt and rust; that it is located and spaced properly; that hooks, bends, ties, stirrups and supplemental reinforcement are placed correctly; that lap lengths, stagger and offsets are provided; and that all mechanical connections are installed per the manufacturer's instructions and/or evaluation report.
Welding of reinforcing steel	Periodic	Verify weldability of reinforcing steel other than A706. Continuous inspection is required for welding of reinforcing steel used in intermediate or special concrete moment frames, boundary elements of special structural walls or shear reinforcement.
Cast-in bolts & embeds	Continuous	

Item	Frequency	Detailed Instructions
Post-installed anchors or dowels		All post-installed anchors/dowels shall be specially inspected as required by the approved ICC-ES report.
Use of required mix design	Periodic	Verify that all mixes used comply with the approved construction documents; ACI 318: Ch. 4, 5.2-5.4; and IBC 1904.3, 1913.2, 1913.3.
Concrete sampling for strength tests, slump, air content, and temperature	Continuous	Samples for strength tests shall be taken in accordance with ASTM C172, cured per ASTM C31 and tested in accordance with ASTM C39. Acceptance criteria for strength tests shall be per ACI 318 Section 5.6.3.3. For each mix placed, samples shall be taken not less than once a day, nor less than once for each 150 yd^3 of concrete, nor less than once for each 5000 ft^2 of surface area for slabs or walls. At the time fresh concrete is is sampled to fabricate specimens for strength tests, perform slump and air content tests and determine the temperature of the concrete.
Concrete & shotcrete placement	Continuous	
Curing temperature and techniques	Periodic	Verify that the ambient temperature for concrete is kept at > 50°F for at least 7 days after placement. High-early-strength concrete shall be kept at > 50°F for at least 3 days. Accelerated curing methods may be used (see ACI 318: 5.11.3). The ambient temperature for shotcrete shall be > 40°F for the same period of time as noted for concrete. Shotcrete shall be kept continuously moist for at least 24 hours after shotcreting. All concrete materials, reinforcement, forms, fillers, and ground shall be free from frost. In hot weather conditions ensure that appropriate measures are taken to avoid plastic shrinkage cracking and that the specified water/cement ratio is not exceeded.
In-situ strength verification	Periodic	Verify that adequate strength has been achieved prior to the removal of shores and forms or the stressing of post-tensioned tendons.
Formwork	Periodic	Verify that the forms are placed plumb and conform to the shapes, lines, and dimensions of the members as required by the approved construction documents.
Welding of Reinforcing Steel (IBC Table 1705.2.2):		
Verification of weldability	Periodic	Verify weldability of reinforcing steel other than A706 based upon carbon equivalent and in accordance with AWS D1.4. Continuous inspection is required for welding of reinforcing steel used in intermediate or special concrete moment frames, boundary elements of special structural walls or shear reinforcement.
Shear reinforcement	Continuous	
Other reinforcing steel	Periodic	Visually inspect all welds in accordance with AWS D1.4.

Soils per IBC Section 1705.6

Item	Frequency	Detailed Instructions
Verify subgrade is adequate to achieve design bearing capacity	Periodic	Prior to placement of concrete.
Verify excavations extend to proper depth and material	Periodic	Prior to placement of compacted fill or concrete.
Verify that subgrade has been appropriately prepared prior to placing compacted fill	Periodic	Prior to placement of compacted fill.
Perform classification and testing of compacted fill materials	Periodic	All materials shall be checked at each lift for proper classifications and gradations not less than once for each 10,000ft² of surface area.
Verify proper materials, densities and lift thicknesses during placement and compaction.	Continuous	

GSBS ARCHITECTS
375 WEST 200 SOUTH
SALT LAKE CITY, UT 84101
P 801.521.8600
F 801.521.7913
www.gsbsarchitects.com

REVISIONS:

PROFESSIONAL STRUCTURAL ENGINEER
No. 323725
DORIAN LEE ADAMS
STATE OF UTAH
3/6/2015

WSU DAVIS CAMPUS D13 REMODEL

875 SOUTH UNIVERSITY PARK BLVD.
CLEARFIELD, UT 84041

DFCM

4110 STATE OFFICE
BUILDING 450 NORTH
STATE STREET SALT
LAKE CITY, UT 84114

OWNER PROJECT NO.:	14297810
GSBS PROJECT NO.:	2014.095.00
ISSUED DATE:	03/09/2015

GENERAL STRUCTURAL NOTES

SE002

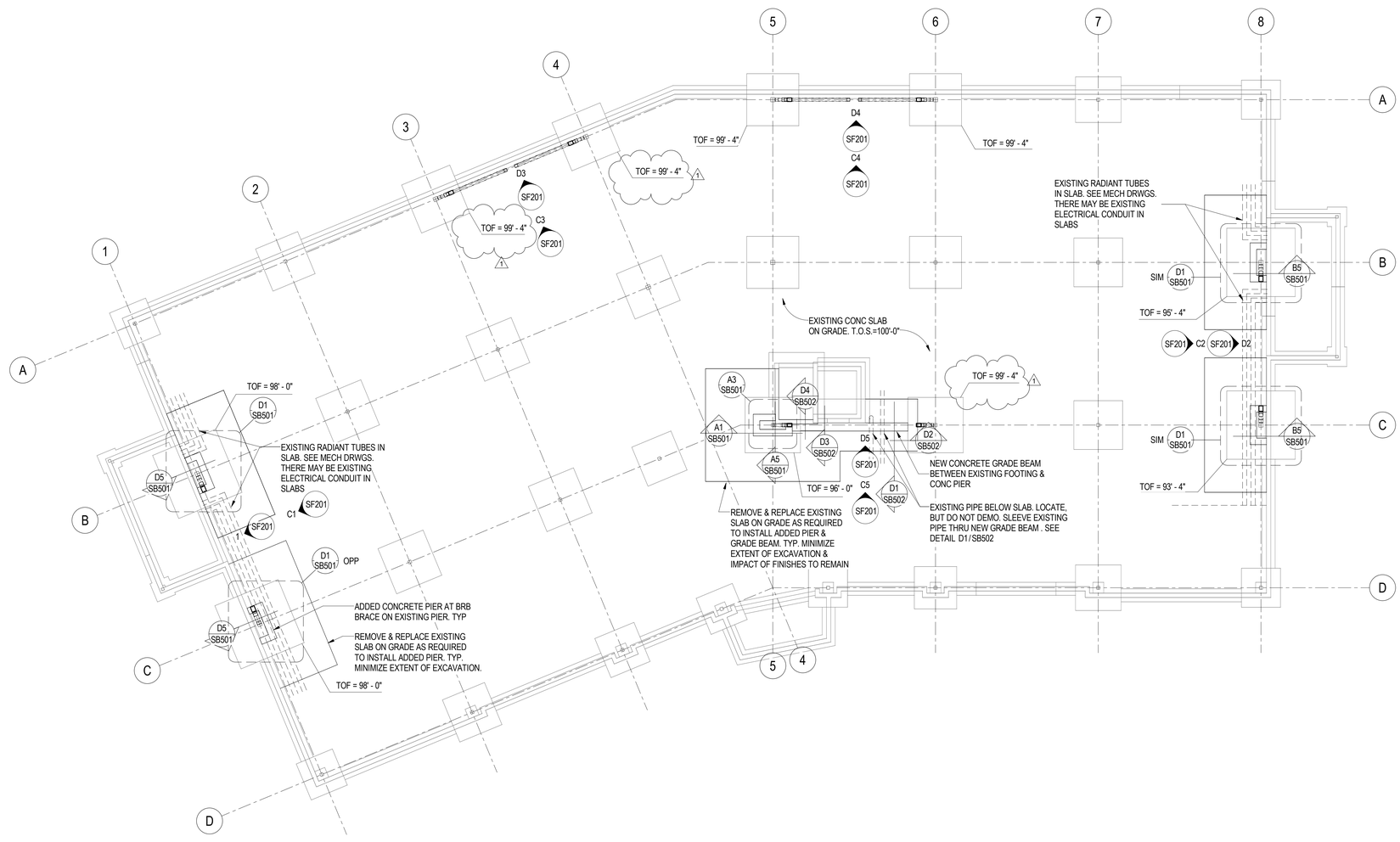

1 SB101 FOOTING & FOUNDATION PLAN

SCALE: 1/8" = 1'-0"

EXISTING ITEMS PLAN LEGEND

LEG-EXIST

- EXISTING FOOTING - CONTINUOUS
- EXISTING FOOTING - THICKENED SLAB
- EXISTING FOOTING - SQUARE, RECTANGULAR, OR MAT
- EXISTING CONCRETE SHEAR WALL, FOUNDATION WALL OR RETAINING WALL
- EXISTING OPENING THROUGH CONCRETE WALL
- EXISTING CONCRETE PIER IN CONCRETE WALL. PIER RECESSED 8" BELOW SLAB. TYP U.N.O.
- EXISTING CONCRETE COLUMN
- EXISTING OPENING

FOOTING & FOUNDATION PLAN LEGEND

LEG-FOOTING

- S — FOOTING STEP
- FOOTING - CONTINUOUS
- FOOTING - THICKENED SLAB
- FOOTING - SQUARE FOOTING - RECTANGULAR FOOTING - MAT FOOTING
- CONCRETE WALL, CONCRETE FOUNDATION WALL, OR CONCRETE RETAINING WALL
- CONCRETE FOUNDATION WALL - RECESSED
- CONCRETE PIER IN CONCRETE WALL. TOP OF PIER RECESSED 8" BELOW SLAB. TYP U.N.O.
- CONCRETE COLUMN OR PIER
- CONCRETE JAMB COLUMN POURED MONOLITHIC WITH CONCRETE WALL
- STEEL COLUMN - TUBE
- STEEL BRACED FRAME - ABOVE
- 0" — CHANGE IN ELEVATION
- SLAB BLOCK-OUT AT COLUMN
- CJ — SLAB CONTROL/CONSTRUCTION JOINT
- SPECIAL SLAB AREA
- RECESSED/DEPRESSED SLAB
- OPENING

GSBS ARCHITECTS

375 WEST 200 SOUTH
SALT LAKE CITY, UT 84101

P 801.521.8600
F 801.521.7913

www.gsbsarchitects.com

REVISIONS:

1	March 27, 2015	Addendum #1

PROJECT NORTH

PROFESSIONAL STRUCTURAL ENGINEER
No. 323725
DORIAN LEE ADAMS
STATE OF UTAH
3/6/2015

WSU DAVIS CAMPUS D13 REMODEL

875 SOUTH UNIVERSITY PARK BLVD.
CLEARFIELD, UT 84041

DFCM

4110 STATE OFFICE
BUILDING 450 NORTH
STATE STREET SALT
LAKE CITY, UT 84114

OWNER PROJECT NO.:	14297810
GSBS PROJECT NO.:	2014.095.00
ISSUED DATE:	03/09/2015

FOOTING & FOUNDATION PLAN

SB101

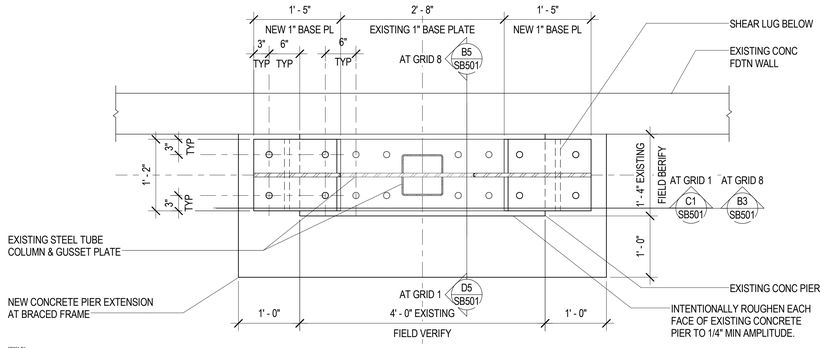

D1 / SB501 STEEL BASE PLATE EXTENSION AT NEW BRACE TO EXISTING COLUMN BASE - PLAN VIEW

NO SCALE

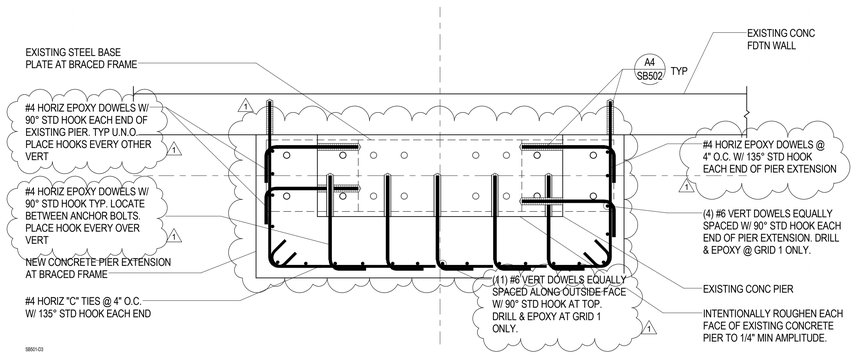

D3 / SB501 CONCRETE PIER EXTENSION AT NEW BRACE TO EXISTING COLUMN BASE - PLAN VIEW

NO SCALE

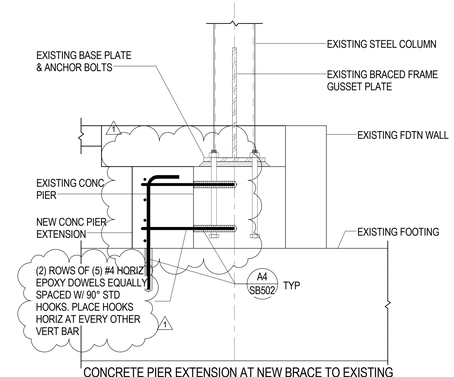

D5 / SB501 CONCRETE PIER EXTENSION AT NEW BRACE TO EXISTING COLUMN BASE

NO SCALE

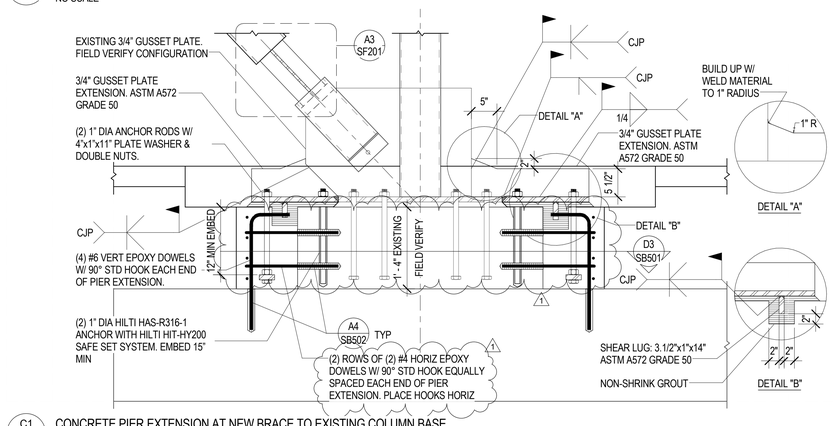

C1 / SB501 CONCRETE PIER EXTENSION AT NEW BRACE TO EXISTING COLUMN BASE

NO SCALE

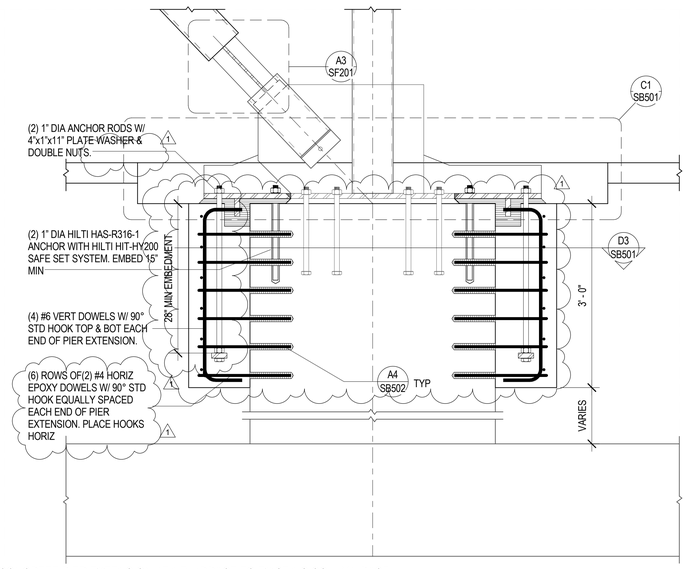

B3 / SB501 CONCRETE PIER EXTENSION AT NEW BRACE TO EXISTING COLUMN BASE

NO SCALE

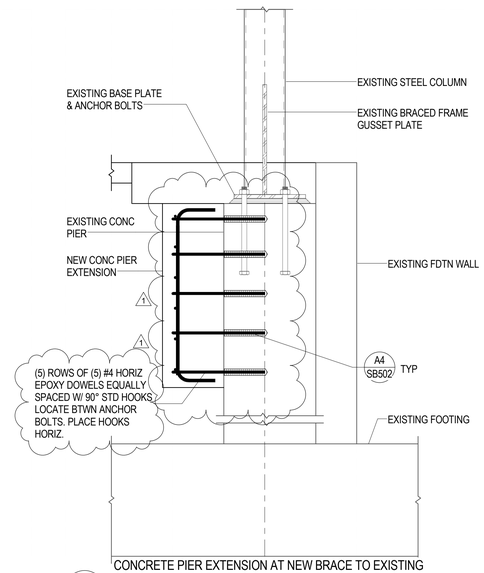

B5 / SB501 CONCRETE PIER EXTENSION AT NEW BRACE TO EXISTING COLUMN BASE

NO SCALE

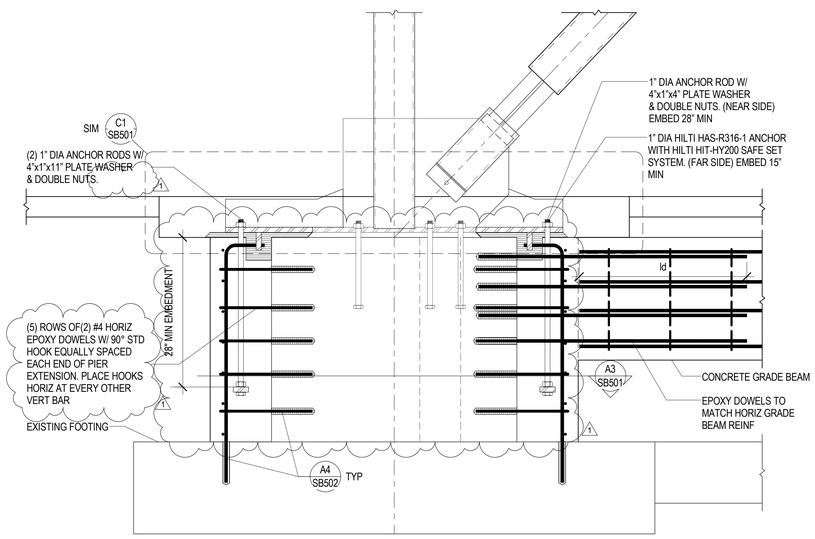

A1 / SB501 CONCRETE PIER EXTENSION AT NEW BRACE TO EXISTING COLUMN BASE

NO SCALE

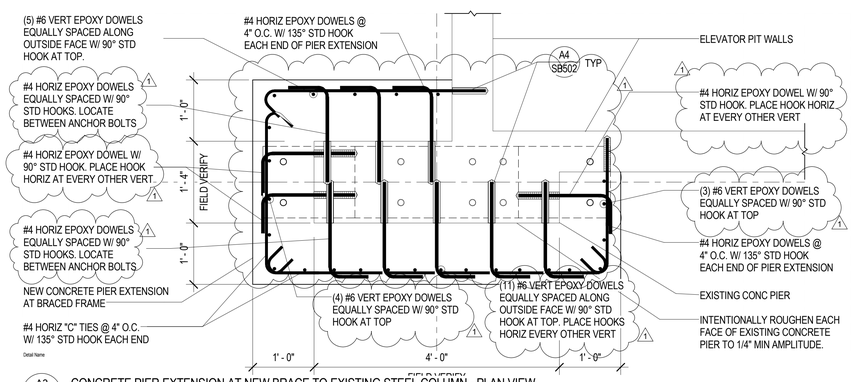

A3 / SB501 CONCRETE PIER EXTENSION AT NEW BRACE TO EXISTING STEEL COLUMN - PLAN VIEW

NO SCALE

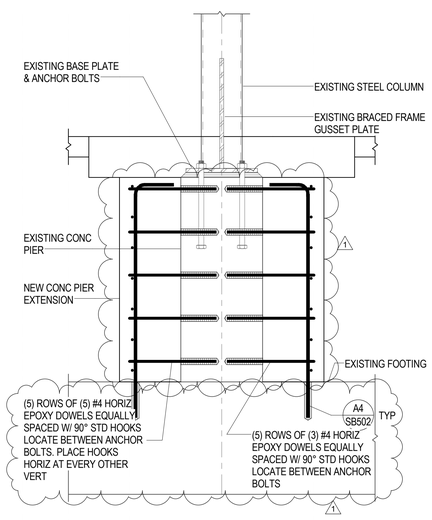

A5 / SB501 CONCRETE PIER EXTENSION AT NEW BRACE TO EXISTING COLUMN BASE

NO SCALE

GSBS ARCHITECTS

375 WEST 200 SOUTH
SALT LAKE CITY, UT 84101

P 801.521.8600
F 801.521.7913

www.gsbsarchitects.com

REVISIONS:

1	March 27, 2015	Addendum #1

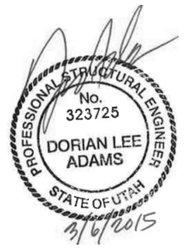

WSU DAVIS CAMPUS D13 REMODEL

875 SOUTH UNIVERSITY PARK BLVD.
CLEARFIELD, UT 84041

DFCM

4110 STATE OFFICE BUILDING 450 NORTH STATE STREET SALT LAKE CITY, UT 84114

OWNER PROJECT NO.:	14297810
GSBS PROJECT NO.:	2014.095.00
ISSUED DATE:	03/09/2015

FOOTING & FOUNDATION DETAILS

SB501

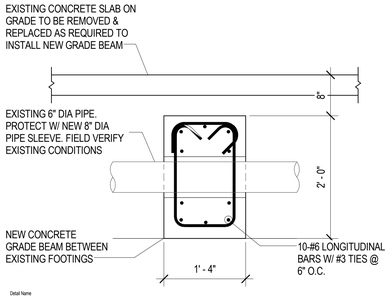

D1 / SB502 NEW CONCRETE GRADE BEAM

NO SCALE

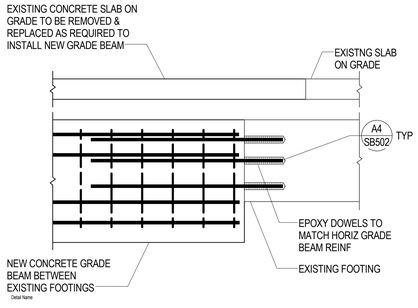

D2 / SB502 NEW CONCRETE GRADE BEAM TO EXISTING FOOTING

NO SCALE

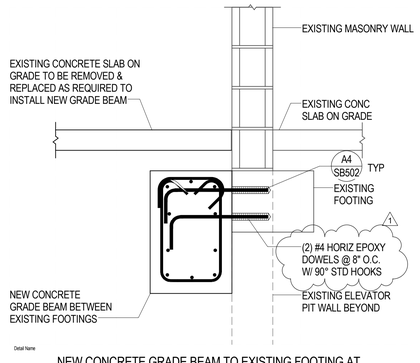

D3 / SB502 NEW CONCRETE GRADE BEAM TO EXISTING FOOTING AT MASONRY WALL

NO SCALE

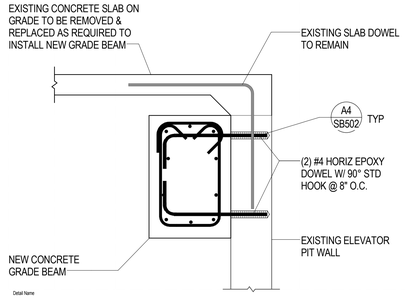

D4 / SB502 NEW CONCRETE GRADE BEAM TO EXISTING ELEVATOR PIT

NO SCALE

CONCRETE REINFORCING BAR DEVELOPMENT AND LAP SPLICE LENGTH SCHEDULE

Sched - Reinf-Splice

BAR SIZE	f'c = 3000 PSI				f'c = 4000 PSI				f'c = 4500 PSI	f'c = 5000 PSI	f'c = 6000 PSI	f'c = ALL
	Ld	Lt	Lsb	Lsbt	Ld	Lt	Lsb	Lsbt				
#3	17"	22"	22"	28"	15"	19"	19"	25"				
#4	22"	29"	29"	38"	19"	25"	25"	33"				
#5	28"	36"	36"	47"	24"	31"	31"	41"				
#6	33"	43"	43"	56"	29"	37"	37"	49"				
#7	48"	63"	63"	81"	42"	54"	54"	71"				

NOTES:

1. DEFINITIONS:
   - Ld: TENSION DEVELOPMENT LENGTH FOR REINFORCEMENT SATISFYING THE FOLLOWING CONDITIONS:
     - SLABS AND WALLS: CLEAR SPACING > 2db AND CONCRETE CLEAR COVER > db
     - BEAMS AND COLUMNS: CLEAR COVER SPACING > db AND CONCRETE CLEAR COVER > db
   - Lt: DEVELOPMENT LENGTH FOR TOP BARS IN TENSION
   - Lsb: TENSION LAP SPLICE LENGTH FOR OTHER THAN TOP BARS (CLASS B)
   - Lsbt: TENSION LAP SPLICE LENGTH OF TOP BARS.
   - Ldc: DEVELOPMENT LENGTH FOR BARS IN COMPRESSION
   - Lsc: TIED COLUMN LAP SPLICE IN COMPRESSION
   - db: NOMINAL BAR DIAMETER (INCHES)
   - TOP BARS: HORIZONTAL REINFORCEMENT WITH MORE THAN 12 INCHES OF FRESH CONCRETE CAST BELOW
2. MULTIPLY VALUES IN SCHEDULE BY 1.5 IF CLEAR SPACING OR CONCRETE COVER DO NOT MEET REQUIREMENTS FOR Ld IN NOTE 1.
3. MULTIPLY VALUES IN SCHEDULE BY 1.3 FOR USE IN LIGHTWEIGHT AGGREGATE CONCRETE.
4. FOR EPOXY COATED BAR: MULTIPLY VALUES IN SCHEDULE BY 1.5 FOR BARS WITH CLEAR COVER < 3db OR CLEAR SPACING < 6db. OTHERWISE MULTIPLY VALUES BY 1.2.
5. a. FOR BUNDLED BARS OF THREE OR LESS MULTIPLY LENGTHS BY 1.2.
   b. FOR BUNDLED BARS OF FOUR OR MORE MULTIPLY LENGTHS BY 1.33.
   c. INDIVIDUAL BAR SPLICES WITHIN A BUNDLE SHALL NOT OVERLAP. ENTIRE BUNDLES SHALL NOT BE LAP SPLICED.
6. SCHEDULE LENGTHS ARE FOR fy=60ksi REINFORCING, MULTIPLY LENGTHS BY 1.25 FOR fy=75ksi REINFORCING.
7. LAP SPLICES ARE NOT PERMITTED FOR #14 & #18 BARS. USE BAR COUPLERS PER G.S.N.

A1 / SB502 CONCRETE REINFORCING BAR LAP SPLICE SCHEDULE

NO SCALE

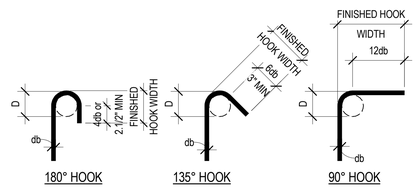

END HOOK SCHEDULE

BAR SIZE	D	FINISHED HOOK WIDTH		
		180° HOOK	135° HOOK	90° HOOK
#3	2.1/4"	3"	3"	6"
#4	3"	4"	3"	8"
#5	3.1/4"	5"	3.3/4"	10"
#6	4.1/2"	6"	4.1/2"	12"
#7	5.1/4"	7"	5.1/4"	14"

Sched - End-Hook

A3 / SB502 TYPICAL STANDARD HOOKS AND EMBEDMENT SCHEDULE

NO SCALE

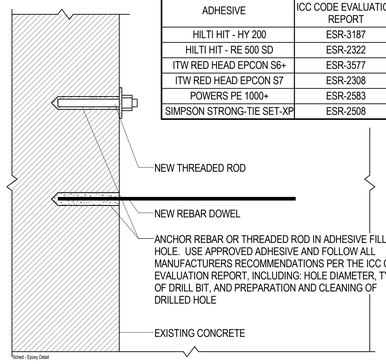

APPROVED ADHESIVES

ADHESIVE	ICC CODE EVALUATION REPORT
HILTI HIT - HY 200	ESR-3187
HILTI HIT - RE 500 SD	ESR-2322
ITW RED HEAD EPCON S6+	ESR-3577
ITW RED HEAD EPCON S7	ESR-2308
POWERS PE 1000+	ESR-2583
SIMPSON STRONG-TIE SET-XP	ESR-2508

ADHESIVE ANCHORING TO CONCRETE SCHEDULE

REINFORCING BAR		THREADED ROD	
DOWEL SIZE	EMBEDMENT LENGTH (SEE NOTE #2)	SIZE (DIA)	EMBEDMENT LENGTH (SEE NOTE #2)
#3	4"	3/8"	4 1/2"
#4	6"	1/2"	6"
#5	9"	5/8"	7 1/2"
#6	10"	3/4"	9"
#7	12"	7/8"	10 1/2"
#8	13"	1"	12"
#9	14"	1 1/4"	15"
#10	18"		
#11	18"		

NOTES:

1. THIS SCHEDULE SHALL BE USED ONLY WHERE SPECIFICALLY REFERENCED ON THE DRAWINGS AND AT OTHER LOCATIONS WITH APPROVAL OF THE ENGINEER.
2. EMBEDMENT LENGTHS SPECIFIED ON PLANS OR DETAILS TAKE PRECEDENCE OVER EMBEDMENT LENGTHS IN THIS SCHEDULE.
3. WHERE THE THICKNESS OF THE EXISTING CONCRETE MEMBER IS NOT SUFFICIENT TO ACHIEVE SCHEDULED EMBEDMENT AND SPECIFIED CLEAR COVER FOR THE ANCHOR, CONTACT THE ENGINEER.
4. USE PROCEDURES AND PRODUCTS RECOMMENDED BY ADHESIVE MANUFACTURER FOR OVERHEAD INSTALLATION.
5. SPECIAL INSPECTION IS REQUIRED DURING INSTALLATION OF ALL ADHESIVE ANCHORS PER THE CODE EVALUATION REPORT FOR THE ANCHOR AND THE QUALITY ASSURANCE SECTION OF THE GENERAL STRUCTURAL NOTES.

A4 / SB502 ADHESIVE ANCHORING TO CONCRETE SCHEDULE

NO SCALE

GSBS ARCHITECTS
375 WEST 200 SOUTH
SALT LAKE CITY, UT 84101
P 801.521.8600
F 801.521.7913
www.gsbsarchitects.com

REVISIONS:

1	March 27, 2015	Addendum #1

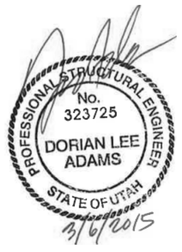

WSU DAVIS CAMPUS D13 REMODEL

875 SOUTH UNIVERSITY PARK BLVD.
CLEARFIELD, UT 84041

DFCM

4110 STATE OFFICE BUILDING 450 NORTH STATE STREET SALT LAKE CITY, UT 84114

OWNER PROJECT NO.: 14297810
GSBS PROJECT NO.: 2014.095.00
ISSUED DATE: 03/09/2015

FOOTING & FOUNDATION DETAILS

SB502

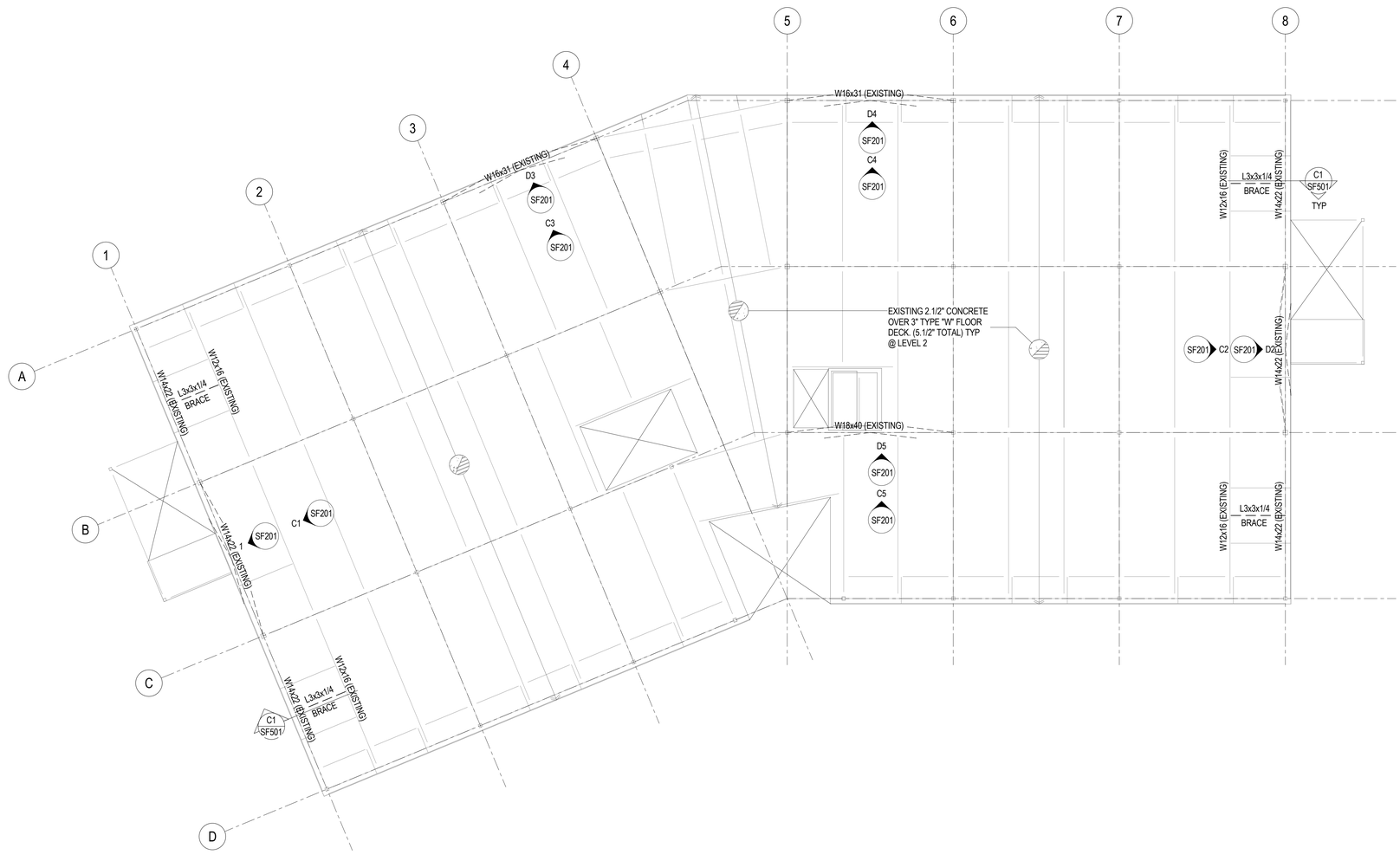

1 / SF102 LEVEL 2 FLOOR FRAMING PLAN

SCALE: 1/8" = 1'-0"

EXISTING ITEMS PLAN LEGEND

LEG-EXIST

- EXISTING STEEL COLUMN - TUBE
- EXISTING STEEL BRACED FRAME
- EXISTING STEEL BEAM OR GIRDER
- EXISTING STEEL JOIST OR PURLIN
- EXISTING CROSS BRIDGING
- EXISTING HORIZONTAL BRIDGING
- EXISTING TO BE REMOVED
- EXISTING OPENING

FLOOR FRAMING PLAN LEGEND

LEG-FLOOR

- STEEL COLUMN - TUBE
- STEEL BRACED FRAME
- STEEL BEAM OR GIRDER
- STEEL JOIST OR PURLIN
- SPECIAL DECK AREA
- RECESSED/DEPRESSED SLAB ON METAL DECK
- OPENING

FLOOR FRAMING PLAN NOTES

1. FOR NEW OPENINGS IN EXISTING FLOOR SLAB. SEE DETAIL B3/SF501.

GSBS ARCHITECTS

375 WEST 200 SOUTH
SALT LAKE CITY, UT 84101

P 801.521.8600
F 801.521.7913

www.gsbsarchitects.com

REVISIONS:

PROJECT NORTH

PROFESSIONAL STRUCTURAL ENGINEER
No. 323725
DORIAN LEE ADAMS
STATE OF UTAH
3/6/2015

WSU DAVIS CAMPUS D13 REMODEL

875 SOUTH UNIVERSITY PARK BLVD.
CLEARFIELD, UT 84041

DFCM

4110 STATE OFFICE
BUILDING 450 NORTH
STATE STREET SALT
LAKE CITY, UT 84114

OWNER PROJECT NO.:	14297810
GSBS PROJECT NO.:	2014.095.00
ISSUED DATE:	03/09/2015

LEVEL 2 FLOOR FRAMING PLAN

SF102

EXISTING ITEMS PLAN LEGEND

LEG-EXIST

- EXISTING STEEL COLUMN - TUBE
- EXISTING STEEL BRACED FRAME
- EXISTING STEEL BEAM OR GIRDER
- EXISTING STEEL JOIST OR PURLIN
- EXISTING CROSS BRIDGING
- EXISTING HORIZONTAL BRIDGING
- EXISTING TO BE REMOVED
- EXISTING OPENING

ROOF FRAMING PLAN LEGEND

- STEEL COLUMN - TUBE
- STEEL BRACED FRAME
- STEEL BEAM OR GIRDER
- STEEL JOIST OR PURLIN
- STEEL ANGLE BRACE / KICKER. SEE __/__ FOR ROOF EDGE KICKER. SEE __/__ FOR FRAME BRACE
- CROSS BRIDGING
- HORIZONTAL BRIDGING
- SPECIAL DECK AREA
- RECESSED/DEPRESSED SLAB ON METAL DECK
- OPENING

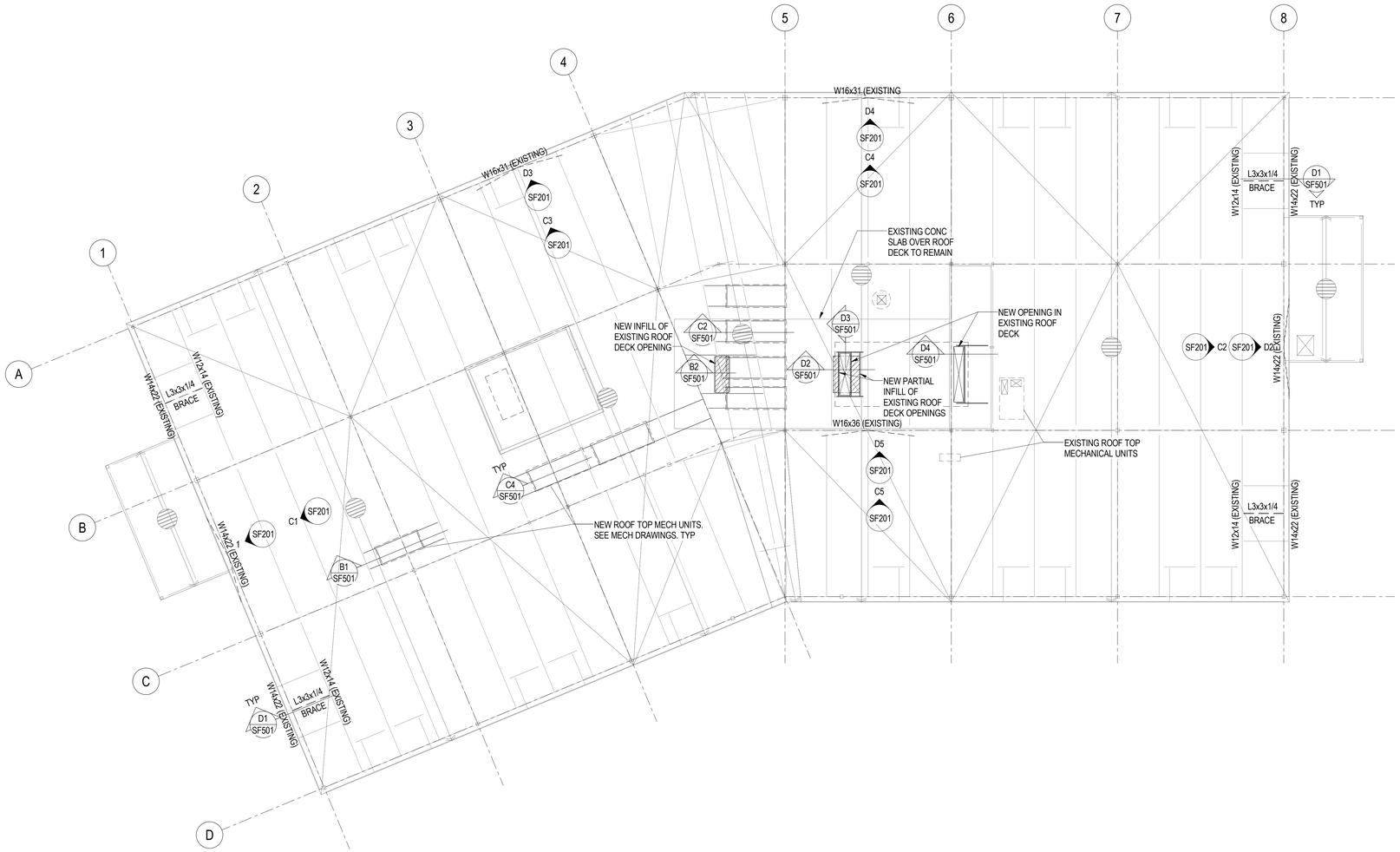

1 SF103 ROOF FRAMING PLAN

SCALE: 1/8" = 1'-0"

GSBS ARCHITECTS

375 WEST 200 SOUTH
SALT LAKE CITY, UT 84101

P 801.521.8600
F 801.521.7913

www.gsbsarchitects.com

REVISIONS:

PROJECT NORTH

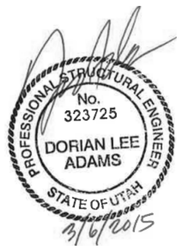

WSU DAVIS CAMPUS D13 REMODEL

875 SOUTH UNIVERSITY PARK BLVD.
CLEARFIELD, UT 84041

DFCM

4110 STATE OFFICE
BUILDING 450 NORTH
STATE STREET SALT
LAKE CITY, UT 84114

OWNER PROJECT NO.:	14297810
GSBS PROJECT NO.:	2014.095.00
ISSUED DATE:	03/09/2015

ROOF FRAMING PLAN

SF103

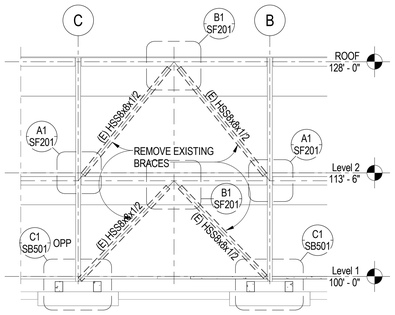

1 SF201 EXISTING BRACED FRAME ELEVATION - GRID 1
NO SCALE

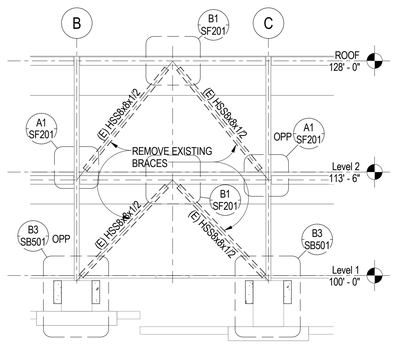

D2 SF201 EXISTING BRACED FRAME ELEVATION - GRID 8
NO SCALE

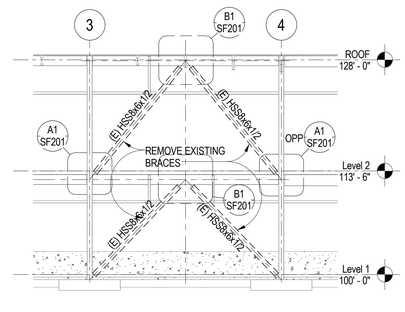

D3 SF201 EXISTING BRACED FRAME ELEVATION - GRID A, 3 TO 4
NO SCALE

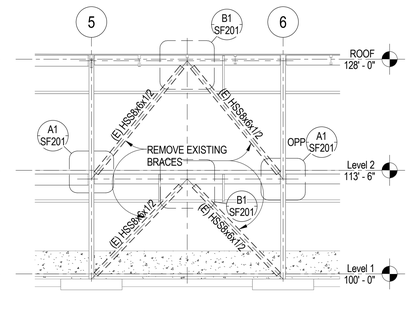

D4 SF201 EXISTING BRACED FRAME ELEVATION - GRID A, 5 TO 6
NO SCALE

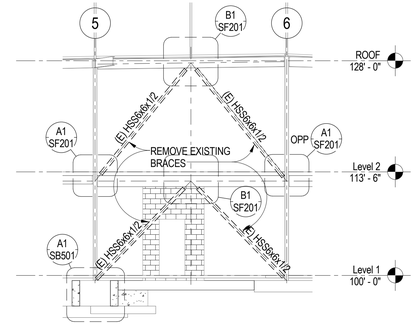

D5 SF201 EXISTING BRACED FRAME ELEVATION - GRID C
NO SCALE

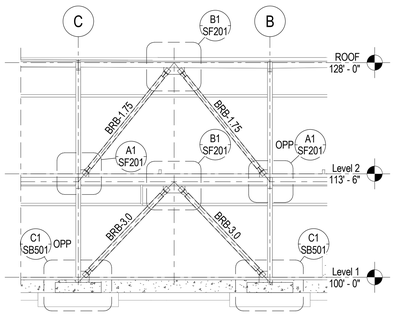

C1 SF201 NEW BRACED FRAME ELEVATION - GRID 1
NO SCALE

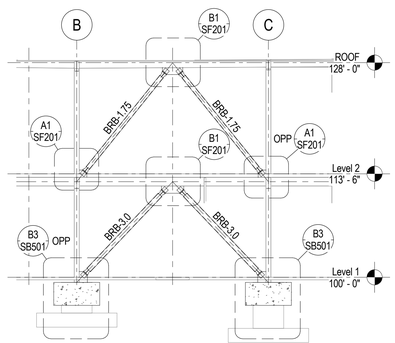

C2 SF201 NEW BRACED FRAME ELEVATION - GRID 8
NO SCALE

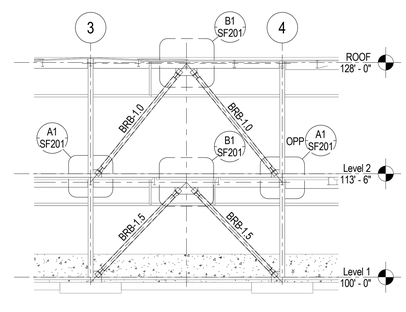

C3 SF201 NEW BRACED FRAME ELEVATION - GRID A, 3 TO 4
NO SCALE

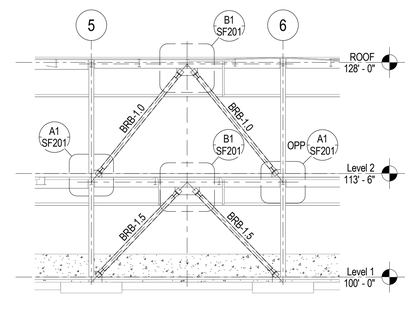

C4 SF201 NEW BRACED FRAME ELEVATION - GRID A, 5 TO 6
NO SCALE

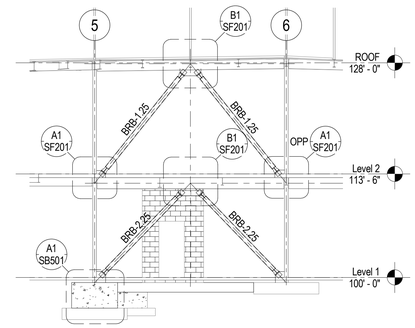

C5 SF201 NEW BRACED FRAME ELEVATION - GRID C
NO SCALE

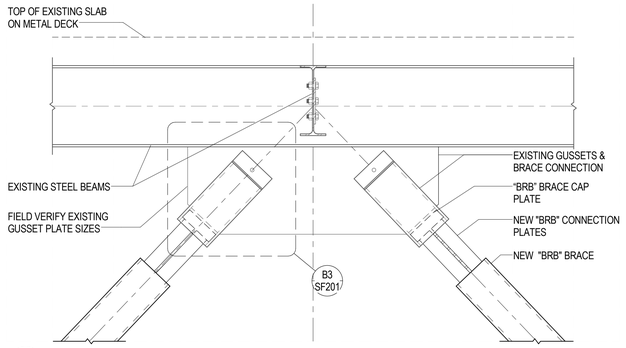

B1 SF201 NEW "BRB" BRACE CONNECTION TO EXISTING BRACE CONNECTION END & CAP PLATE
NO SCALE

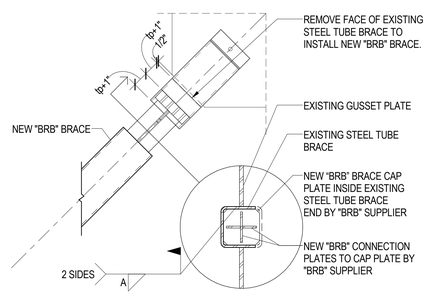

SF201-A2
B3 SF201 NEW "BRB" BRACE CONNECTION TO EXISTING BRACE END & CAP PLATE - TOP CONNECTION
NO SCALE

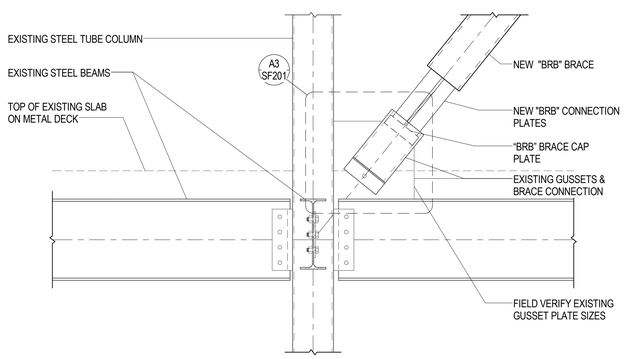

A1 SF201 NEW "BRB" BRACE CONNECTION TO EXISTING BRACE CONNECTION END & CAP PLATE
NO SCALE

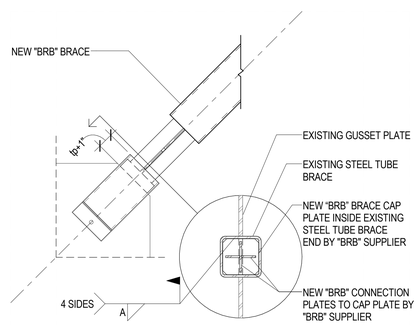

SB501-D5
A3 SF201 NEW "BRB" BRACE CONNECTION TO EXISTING BRACE END & CAP PLATE - BOTTOM CONNECTION
NO SCALE

BUCKLING RESTRAINED BRACE SCHEDULE

MARK	LOCATION		LEVEL	QUANTITY	CORE AREA (in^2)	B	w	STIFFNESS MODIFICATION FACTOR	MINIMUM STROKE (in)	CASING*			CAP PLATE THICK (t_p)	WELD A (in.)	REMARKS
	LINE	GRIDS								SHAPE	HEIGHT	WIDTH			
BRB 1.75	1	C-B	LEV-2	2	1.75	1.07	1.43	1.35	1.75	TUBE	7"	7"	1.5/8"	1/4"	
BRB 3.00	1	C-B	LEV-1	2	3.00	1.07	1.45	1.45	1.75	TUBE	7"	7"	2.1/8"	5/16"	
BRB 1.75	8	C-B	LEV-2	2	1.75	1.07	1.43	1.35	1.75	TUBE	7"	7"	1.5/8"	1/4"	
BRB 3.00	8	C-B	LEV-1	2	3.00	1.07	1.45	1.45	1.75	TUBE	7"	7"	2.1/8"	5/16"	
BRB 1.00	A	3-4	LEV-2	2	1.00	1.06	1.42	1.40	1.75	TUBE	7"	7"	1.1/2"	1/4"	
BRB 1.50	A	3-4	LEV-1	2	1.50	1.07	1.45	1.45	1.75	TUBE	7"	7"	1.3/4" 1	1/4"	
BRB 1.00	A	5-6	LEV-2	2	1.00	1.06	1.42	1.40	1.75	TUBE	7"	7"	1.1/2"	1/4"	
BRB 1.50	A	5-6	LEV-1	2	1.50	1.07	1.45	1.45	1.75	TUBE	7"	7"	1.3/4" 1	1/4"	
BRB 1.25	C	5-6	LEV-2	2	1.25	1.07	1.42	1.40	1.75	TUBE	7"	7"	1.5/8"	1/4"	
BRB 2.25	C	5-6	LEV-1	2	2.25	1.07	1.45	1.45	1.75	TUBE	7"	7"	2.1/8"	1/4"	

NOTES

1. CORE MATERIAL SHALL BE ASTM A36 MATERIAL SELECTED TO PROVIDE A MINIMUM TENSILE YIELD STRENGTH OF 38 ksi AND A MAXIMUM TENSILE YIELD STRENGTH OF 46 ksi. COUPON TESTS SHALL BE TAKEN FROM PLATES AT POINT OF MANUFACTURE OR BRB's AND SHAL BE USED TO VERIFY CONFORMANCE. 1
2. "BRB" SUPPLIER SHALL DESIGN BRACE CONNECTIONS IN ACCORDANCE WITH AISC 341-10.
3. "BRB" SUPPLIER SHALL PROVIDE TEST RESULTS FOR SIMILAR BRACES IN ACCORDANCE WITH AISC 341-10. 1
4. "BRB" SUPPLIER SHALL PROVIDE TESTED MATERIAL ADJUSTMENT FACTOR FOR COMPRESSION STRENGTH (B) AND STRAIN HARDENING (w). 1
5. STIFFNESS MODIFICATION FACTORS SHOWN ARE DESIGN VALUES, WORK POINT TO WORK POINT. FINAL STIFFNESS MODIFICATION FACTORS SHALL BE WITHIN +/- 10% OF THOSE INDICATED. 1 1
6. MINIMUM STROKE TO OCCUR AT EACH END OF BRACE IN TENSION AND COMPRESSION DIRECTIONS. CORE EXTENSIONS TO REMAIN STABLE OVER 2X THIS LENGTH.
7. CAP PLATE MATERIAL SHALL BE ASTM A572, GRADE 50.
8. WELD "A" SHALL BE FULL LENGTH OF CAP PLATE. 1
9. INFORMATION SHOWN RELATING TO BRB's IN INCLUDED FOR GENERAL DESIGN CONCEPT AND BIDDING PURPOSES.

BRB SCHEDULE

GSBS ARCHITECTS
375 WEST 200 SOUTH
SALT LAKE CITY, UT 84101
P 801.521.8600
F 801.521.7913
www.gsbsarchitects.com

REVISIONS:

1	March 27, 2015	Addendum #1

WSU DAVIS CAMPUS D13 REMODEL

875 SOUTH UNIVERSITY PARK BLVD.
CLEARFIELD, UT 84041

DFCM

4110 STATE OFFICE BUILDING 450 NORTH STATE STREET SALT LAKE CITY, UT 84114

OWNER PROJECT NO.:	14297810
GSBS PROJECT NO.:	2014.095.00
ISSUED DATE:	03/09/2015

BRACED FRAME ELEVATIONS

SF201

GSBS ARCHITECTS
375 WEST 200 SOUTH
SALT LAKE CITY, UT 84101
P 801.521.8600
F 801.521.7913
www.gsbsarchitects.com

REVISIONS:

1	March 27, 2015	Addendum #1

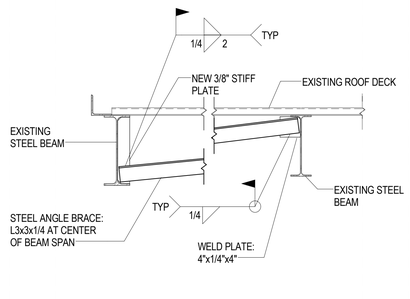

ROOF BEAM BRACE

D1 / SF501 ROOF BEAM BRACE
NO SCALE

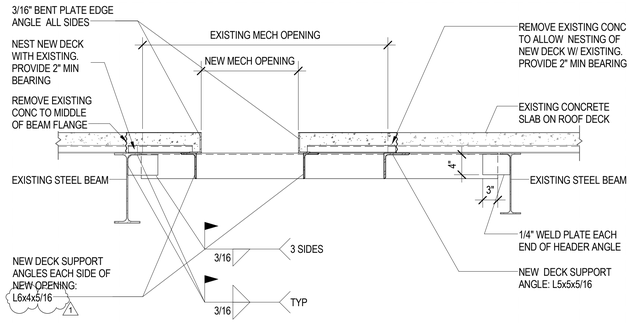

MECH OPENING

D2 / SF501 NEW MECH ROOF OPENING W/ PARTIAL INFILL OF EXISTING OPENING
NO SCALE

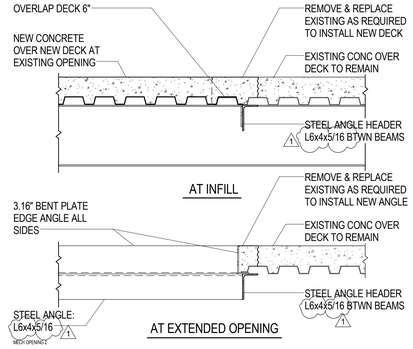

MECH OPENINGS

D3 / SF501 NEW OPENING AND INFILL AT END CONDITIONS
NO SCALE

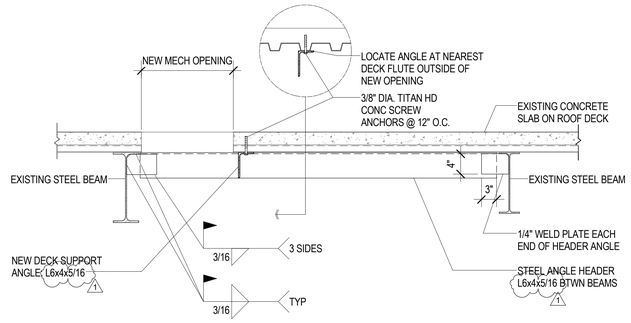

MECH OPENING 3

D4 / SF501 NEW MECH ROOF OPENING IN EXISTING ROOF W/ CONCRETE OVER ROOF DECK
NO SCALE

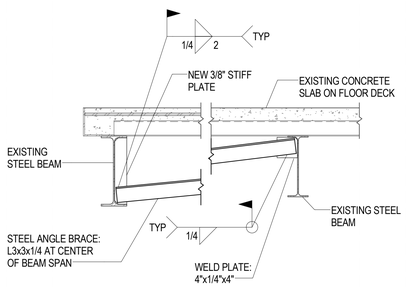

FLOOR BEAM BRACE

C1 / SF501 FLOOR BEAM BRACE
NO SCALE

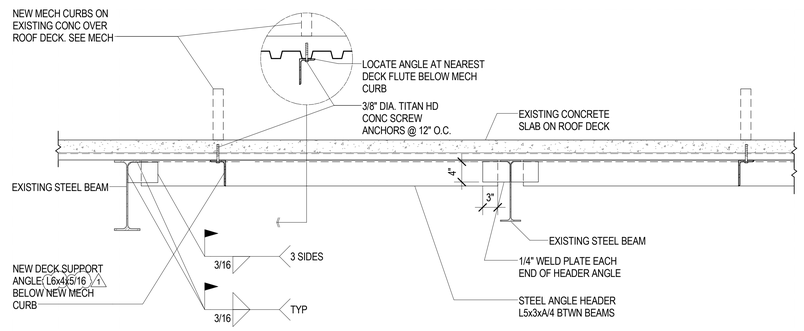

MECH CURB 1

C2 / SF501 NEW MECH EQUIPMENT CURBS ON EXISTING ROOF W/ CONCRETE OVER ROOF DECK
NO SCALE

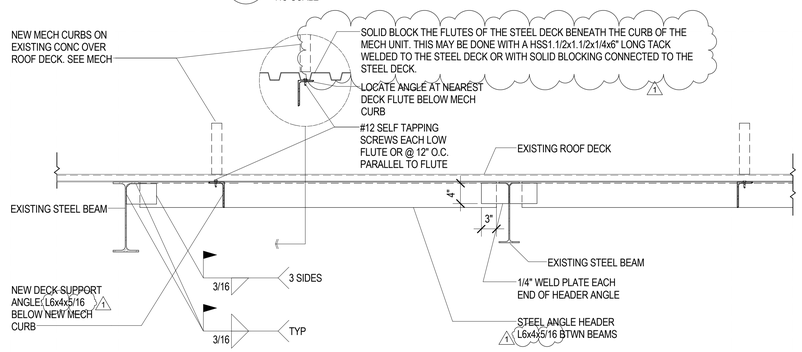

MECH CURB 2

C4 / SF501 NEW MECH EQUIPMENT CURBS ON EXISTING ROOF DECK
NO SCALE

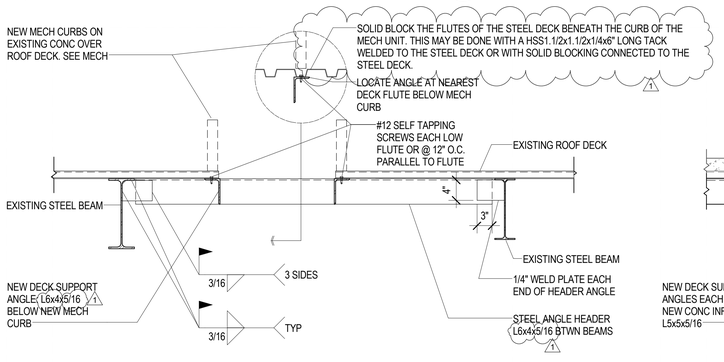

MECH CURB 2

B1 / SF501 NEW MECH ROOF OPENING W/ STEEL ANGLE SUPPORT FRAME
NO SCALE

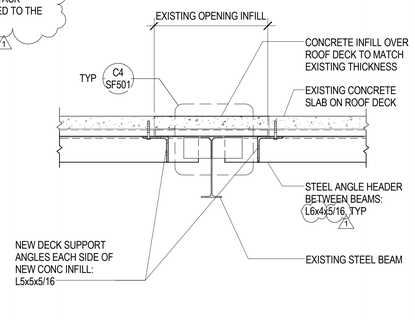

MECH OPENING INFILL

B2 / SF501 NEW CONCRETE INFILL AT EXISTING ROOF OPENING
NO SCALE

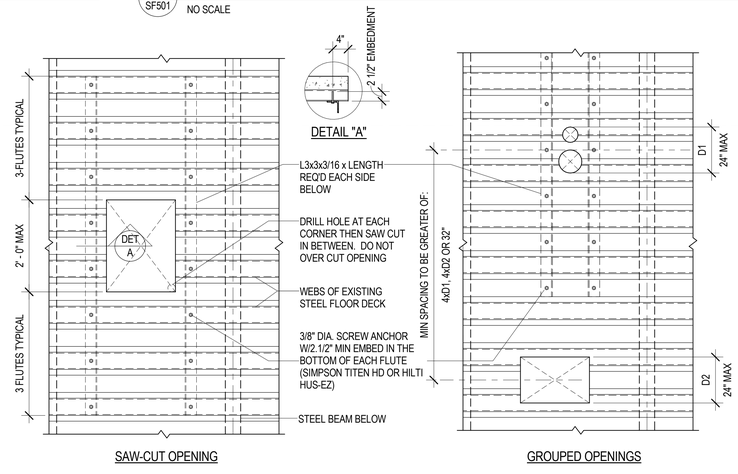

NOTES:

1. UNREINFORCED OPENINGS
A. OPENINGS UP TO 6" DIA DO NOT REQUIRE REINFORCING PROVIDED THEY ARE NOT SPACED LESS THAN 32" O.C.

2. SAW-CUT OPENINGS
A. SHIM GAPS BETWEEN ANGLE AND BOTTOM FLUTE.
B. INSTALL ANCHORS PER ICC REPORT.

3. GROUPED OPENINGS
A. OPENINGS SPACED CLOSER THAN THE MIN SPACING SHALL BE REINFORCED AS A SINGLE OPENING.
B. THE SIZE OF OPENINGS BETWEEN BEAM SUPPORTS MEASURED PARALLEL TO THE DECK FLUTES IS NOT LIMITED.

TYP FLR Misc Openings (W Deck)

B3 / SF501 TYPICAL MISCELLANEOUS FLOOR OPENING REINFORCING DETAIL FOR TYPE "W" DECK (UP TO 24")
NO SCALE

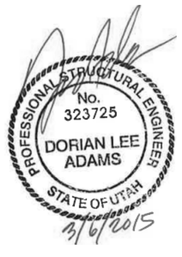

WSU DAVIS CAMPUS D13 REMODEL

875 SOUTH UNIVERSITY PARK BLVD.
CLEARFIELD, UT 84041

DFCM

4110 STATE OFFICE
BUILDING 450 NORTH
STATE STREET SALT
LAKE CITY, UT 84114

OWNER PROJECT NO.:	14297810
GSBS PROJECT NO.:	2014.095.00
ISSUED DATE:	03/09/2015

FRAMING DETAILS

SF501

GENERAL SHEET NOTES

1. PRIOR TO SUBMITTING BID, VISIT THE SITE AND FIELD VERIFY THE EXTENT OF ELECTRICAL DEMOLITION WORK TO MEET THE INTENT OF THE BID DOCUMENTS AND INCLUDE ALL COSTS IN BID.
2. PRIOR TO REMOVAL OF ANY ELECTRICAL EQUIPMENT OR WIRING, FIELD VERIFY THAT THE EQUIPMENT OR WIRING IS INACTIVE OR NO LONGER IN USE. WHERE EQUIPMENT OR WIRING IS STILL IN USE, IDENTIFY IT AND BRING IT TO THE ATTENTION OF THE ENGINEER.
3. COORDINATE DEMOLITION SEQUENCE WITH THE GENERAL CONTRACTOR AND LEAVE EQUIPMENT OPERATIONAL AS NEEDED FOR TEMPORARY POWER FOR THE DEMOLITION/CONSTRUCTION ACTIVITIES.
4. REMOVE ALL ABANDONED COMMUNICATIONS CABLING. PRIOR TO DEMOLITION MEET WITH OWNER AND IDENTIFY ALL COMMUNICATIONS CABLE TO REMAIN. PROTECT CABLE TO REMAIN DURING DEMOLITION.
5. UNLESS OTHERWISE INDICATED, REMOVE ALL LIGHTING FIXTURES, DEVICES AND EQUIPMENT IN DEMOLITION AREAS OR THAT ARE SHOWN DASHED. REMOVE ASSOCIATED CONDUIT AND WIRING BACK TO THE PANELBOARD OF ORIGINATION. SYSTEMATICALLY CHECK EACH BRANCH PANELBOARD CIRCUIT TO VERIFY EACH THAT CIRCUIT BREAKER NO LONGER HAS ANY ACTIVE LOADS. DISCONNECT THE WIRING AND TURN THE CIRCUIT BREAKER OFF, AND LABEL AS "SPARE". ANY REMAINING ACTIVE LOADS SHALL BE LABELED AT THE PANELBOARD AS TO WHAT LOAD IS SERVED.
6. REMOVE ALL DEVICES, RACEWAYS AND WIRING FROM WALLS TO BE REMOVED. WHERE ACTIVE RACEWAYS OCCUR IN WALLS TO BE REMOVED, REROUTE THE RACEWAY WITH ASSOCIATED WIRING TO KEEP THE CIRCUIT OPERATIONAL.
7. REMOVE THE ENTIRE FIRE ALARM SYSTEM INCLUDING DEVICES WITH ASSOCIATED CONDUIT AND WIRING. HOWEVER, THE EXISTING FIRE ALARM DEVICES AND SYSTEM SHALL REMAIN ACTIVE THROUGHOUT DEMOLITION AND CONSTRUCTION UNTIL THE NEW SYSTEM IS TESTED AND OPERATIONAL.
8. REMOVE ALL ABANDONED RACEWAY, CONDUIT, WIRING AND CABLING WHETHER ABANDONED PREVIOUS TO THIS PROJECT OR AS A RESULT OF THIS PROJECT. NOT ALL ABANDONED ITEMS ARE SHOWN ON THESE PLANS AND FIELD VERIFICATION OF DEMOLITION SCOPE EXTENT IS REQUIRED.
9. REFER TO MECHANICAL DEMOLITION SHEETS AND PROVIDE ALL ELECTRICAL DEMOLITION WORK NECESSARY FOR THE MECHANICAL DEMOLITION. COORDINATE ALL REQUIRED DEMOLITION WITH THE MECHANICAL CONTRACTOR.
10. WHERE EXISTING OUTLETS ARE SHOWN TO REMAIN, REPLACE WITH NEW OUTLET AND FACEPLATE. COORDINATE WITH NEW WORK SHOWN ON NEW ELECTRICAL PLANS.
11. A PREVIOUS DEMOLITION PACKAGE WAS ISSUED TO REMOVE INTERIOR WALLS AND CEILINGS. COORDINATE ELECTRICAL DEMOLITION WORK WITH WORK OF OTHER BID PACKAGE.

SHEET KEYNOTES

1. REMOVE EXISTING ELECTRICAL PANEL WITH ALL ASSOCIATED FEEDER AND BRANCH CIRCUIT WIRING AND CONDUIT. FOR ANY CIRCUITS THAT REMAIN, RELOCATE CIRCUITS TO NEW PANELBOARD (SEE NEW POWER PLAN). ASSUME 12 EA 20/1P CIRCUITS TO RELOCATE TO NEW PANEL.
2. EXISTING RESTROOM LIGHT FIXTURES TO REMAIN AND BE RE-CIRCUITED AS INDICATED ON NEW LIGHTING PLANS.
3. FIELD VERIFY, LOCATE AND PROTECT EXISTING POWER AND TELECOMM SERVICE LINES TO REMAIN.

GSBS ARCHITECTS
375 WEST 200 SOUTH
SALT LAKE CITY, UT 84101
P 801.521.8600
F 801.521.7913
www.gsbsarchitects.com

REVISIONS:

1	3/27/2015	ADDENDUM #1

SPECTRUM ENGINEERS
324 S. State St., Suite 400
Salt Lake City, UT 84111
800-678-7077
801-328-5151
fax: 801-328-5155
www.spectrum-engineers.com

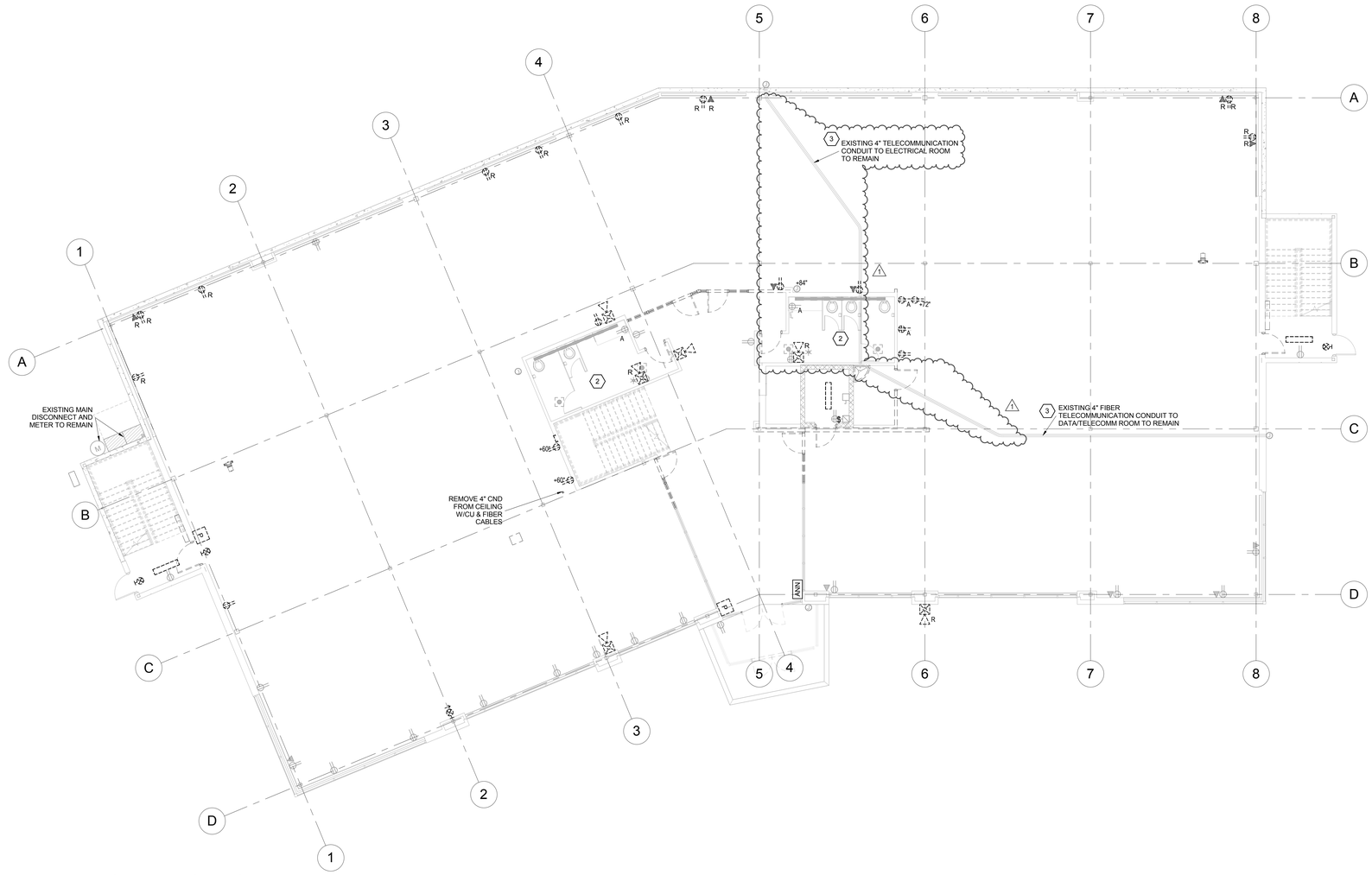

1 MAIN LEVEL ELECTRICAL DEMOLITION PLAN
SCALE: 1/8" = 1'-0"

WSU DAVIS CAMPUS D13 REMODEL

875 SOUTH UNIVERSITY PARK BLVD.
CLEARFIELD, UT 84041

DFCM

4110 STATE OFFICE
BUILDING 450 NORTH
STATE STREET SALT
LAKE CITY, UT 84114

OWNER PROJECT NO.:	14297810
GSBS PROJECT NO.:	2014.095.00
ISSUED DATE:	03/09/2015

MAIN LEVEL ELECTRICAL DEMOLITION PLAN

ED101

C:\Users\jpm\Documents\2014058ZElec_Central_jpm.rvt

3/26/2015 10:48:53 AM

GENERAL SHEET NOTES

1. PRIOR TO SUBMITTING BID, VISIT THE SITE AND FIELD VERIFY THE EXTENT OF ELECTRICAL DEMOLITION WORK TO MEET THE INTENT OF THE BID DOCUMENTS AND INCLUDE ALL COSTS IN BID.
2. PRIOR TO REMOVAL OF ANY ELECTRICAL EQUIPMENT OR WIRING, FIELD VERIFY THAT THE EQUIPMENT OR WIRING IS INACTIVE OR NO LONGER IN USE. WHERE EQUIPMENT OR WIRING IS STILL IN USE, IDENTIFY IT AND BRING IT TO THE ATTENTION OF THE ENGINEER.
3. COORDINATE DEMOLITION SEQUENCE WITH THE GENERAL CONTRACTOR AND LEAVE EQUIPMENT OPERATIONAL AS NEEDED FOR TEMPORARY POWER FOR THE DEMOLITION/CONSTRUCTION ACTIVITIES.
4. REMOVE ALL ABANDONED COMMUNICATIONS CABLING. PRIOR TO DEMOLITION MEET WITH OWNER AND IDENTIFY ALL COMMUNICATIONS CABLE TO REMAIN. PROTECT CABLE TO REMAIN DURING DEMOLITION.
5. UNLESS OTHERWISE INDICATED, REMOVE ALL LIGHTING FIXTURES, DEVICES AND EQUIPMENT IN DEMOLITION AREAS OR THAT ARE SHOWN DASHED. REMOVE ASSOCIATED CONDUIT AND WIRING BACK TO THE PANELBOARD OF ORIGINATION. SYSTEMATICALLY CHECK EACH BRANCH PANELBOARD CIRCUIT TO VERIFY EACH THAT CIRCUIT BREAKER NO LONGER HAS ANY ACTIVE LOADS. DISCONNECT THE WIRING AND TURN THE CIRCUIT BREAKER OFF, AND LABEL AS "SPARE". ANY REMAINING ACTIVE LOADS SHALL BE LABELED AT THE PANELBOARD AS TO WHAT LOAD IS SERVED.
6. REMOVE ALL DEVICES, RACEWAYS AND WIRING FROM WALLS TO BE REMOVED. WHERE ACTIVE RACEWAYS OCCUR IN WALLS TO BE REMOVED, REROUTE THE RACEWAY WITH ASSOCIATED WIRING TO KEEP THE CIRCUIT OPERATIONAL.
7. REMOVE THE ENTIRE FIRE ALARM SYSTEM INCLUDING DEVICES WITH ASSOCIATED CONDUIT AND WIRING. HOWEVER, THE EXISTING FIRE ALARM DEVICES AND SYSTEM SHALL REMAIN ACTIVE THROUGHOUT DEMOLITION AND CONSTRUCTION UNTIL THE NEW SYSTEM IS TESTED AND OPERATIONAL.
8. REMOVE ALL ABANDONED RACEWAY, CONDUIT, WIRING AND CABLING WHETHER ABANDONED PREVIOUS TO THIS PROJECT OR AS A RESULT OF THIS PROJECT. NOT ALL ABANDONED ITEMS ARE SHOWN ON THESE PLANS AND FIELD VERIFICATION OF DEMOLITION SCOPE EXTENT IS REQUIRED.
9. REFER TO MECHANICAL DEMOLITION SHEETS AND PROVIDE ALL ELECTRICAL DEMOLITION WORK NECESSARY FOR THE MECHANICAL DEMOLITION. COORDINATE ALL REQUIRED DEMOLITION WITH THE MECHANICAL CONTRACTOR.
10. WHERE EXISTING OUTLETS ARE SHOWN TO REMAIN, REPLACE WITH NEW OUTLET AND FACEPLATE. COORDINATE WITH NEW WORK SHOWN ON NEW ELECTRICAL PLANS.
11. A PREVIOUS DEMOLITION PACKAGE WAS ISSUED TO REMOVE INTERIOR WALLS AND CEILINGS. COORDINATE ELECTRICAL DEMOLITION WORK WITH WORK OF OTHER BID PACKAGE.

SHEET KEYNOTES

1. FIELD VERIFY, LOCATE AND PROTECT EXISTING POWER AND TELECOMM SERVICE LINES TO REMAIN.
2. EXISTING RESTROOM LIGHT FIXTURES TO REMAIN AND BE RE-CIRCUITED AS INDICATED ON NEW LIGHTING PLANS.
3. EXISTING TELECOMMUNICATIONS EQUIPMENT IN MAIN ELECTRICAL ROOM TO REMAIN.

GSBS ARCHITECTS
375 WEST 200 SOUTH
SALT LAKE CITY, UT 84101
P 801.521.8600
F 801.521.7913
www.gsbsarchitects.com

REVISIONS:

1	3/27/2015	ADDENDUM #1

SPECTRUM ENGINEERS
324 S. State St., Suite 400
Salt Lake City, UT 84111
800-678-7077
801-328-5151
fax: 801-328-5155
www.spectrum-engineers.com

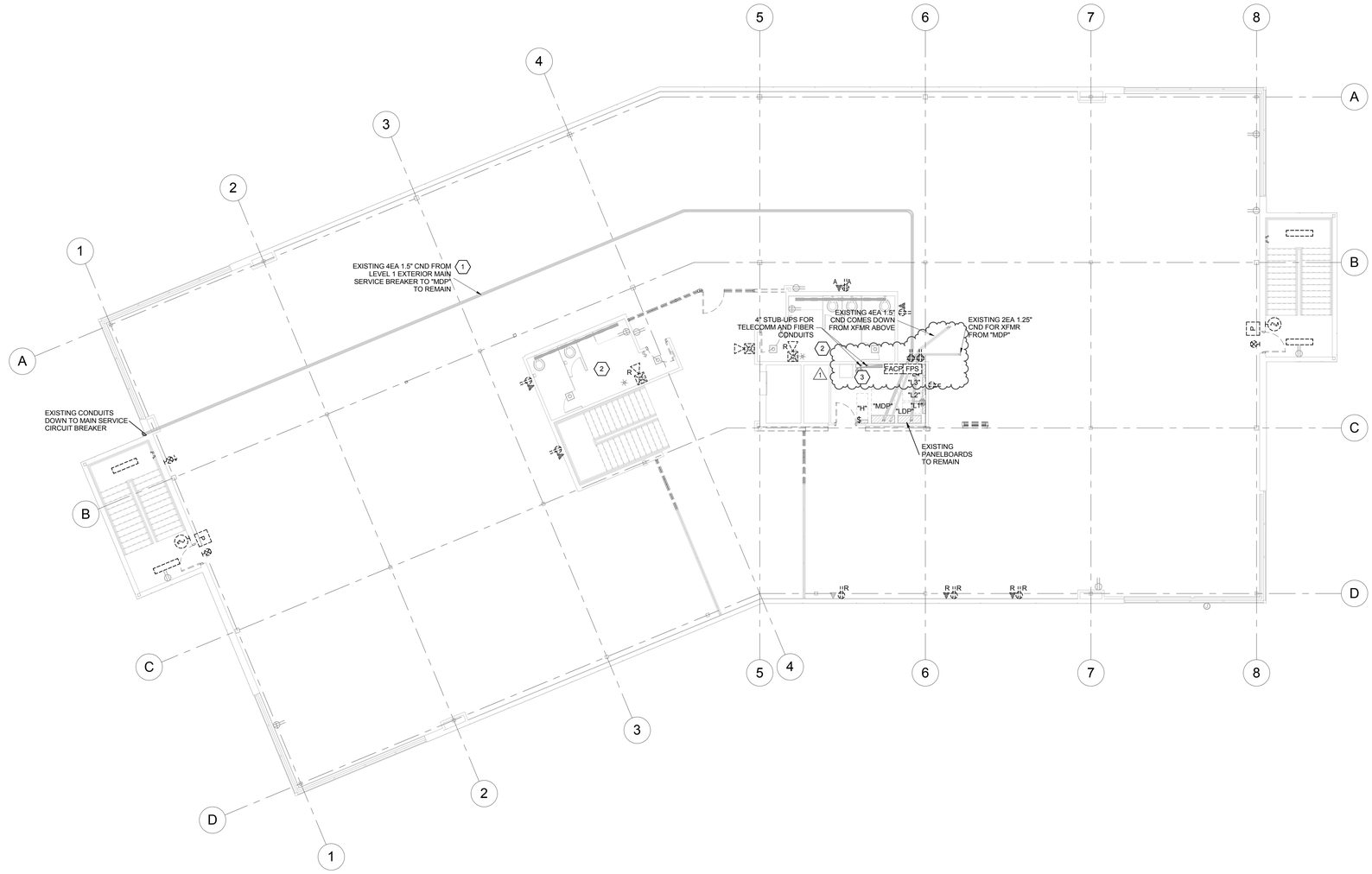

1 SECOND LEVEL ELECTRICAL DEMOLITION PLAN
SCALE: 1/8" = 1'-0"

WSU DAVIS CAMPUS D13 REMODEL

875 SOUTH UNIVERSITY PARK BLVD.
CLEARFIELD, UT 84041

DFCM

4110 STATE OFFICE BUILDING 450 NORTH STATE STREET SALT LAKE CITY, UT 84114

OWNER PROJECT NO.:	14297810
GSBS PROJECT NO.:	2014.095.00
ISSUED DATE:	03/09/2015

SECOND LEVEL ELECTRICAL DEMOLITION PLAN

ED102

C:\Users\jpm\Documents\2014058ZElec Central_jpm.rvt
3/26/2015 10:48:58 AM

GENERAL SHEET NOTES

1. PRIOR TO SUBMITTING BID, VISIT THE SITE AND FIELD VERIFY THE EXTENT OF ELECTRICAL DEMOLITION WORK TO MEET THE INTENT OF THE BID DOCUMENTS AND INCLUDE ALL COSTS IN BID.
2. PRIOR TO REMOVAL OF ANY ELECTRICAL EQUIPMENT OR WIRING, FIELD VERIFY THAT THE EQUIPMENT OR WIRING IS INACTIVE OR NO LONGER IN USE. WHERE EQUIPMENT OR WIRING IS STILL IN USE, IDENTIFY IT AND BRING IT TO THE ATTENTION OF THE ENGINEER.
3. COORDINATE DEMOLITION SEQUENCE WITH THE GENERAL CONTRACTOR AND LEAVE EQUIPMENT OPERATIONAL AS NEEDED FOR TEMPORARY POWER FOR THE DEMOLITION/CONSTRUCTION ACTIVITIES.
4. REMOVE ALL ABANDONED COMMUNICATIONS CABLING. PRIOR TO DEMOLITION MEET WITH OWNER AND IDENTIFY ALL COMMUNICATIONS CABLE TO REMAIN. PROTECT CABLE TO REMAIN DURING DEMOLITION.
5. UNLESS OTHERWISE INDICATED, REMOVE ALL LIGHTING FIXTURES, DEVICES AND EQUIPMENT IN DEMOLITION AREAS OR THAT ARE SHOWN DASHED. REMOVE ASSOCIATED CONDUIT AND WIRING BACK TO THE PANELBOARD OF ORIGINATION. SYSTEMATICALLY CHECK EACH BRANCH PANELBOARD CIRCUIT TO VERIFY EACH THAT CIRCUIT BREAKER NO LONGER HAS ANY ACTIVE LOADS. DISCONNECT THE WIRING AND TURN THE CIRCUIT BREAKER OFF, AND LABEL AS "SPARE". ANY REMAINING ACTIVE LOADS SHALL BE LABELED AT THE PANELBOARD AS TO WHAT LOAD IS SERVED.
6. REMOVE ALL DEVICES, RACEWAYS AND WIRING FROM WALLS TO BE REMOVED. WHERE ACTIVE RACEWAYS OCCUR IN WALLS TO BE REMOVED, REROUTE THE RACEWAY WITH ASSOCIATED WIRING TO KEEP THE CIRCUIT OPERATIONAL.
7. REMOVE THE ENTIRE FIRE ALARM SYSTEM INCLUDING DEVICES WITH ASSOCIATED CONDUIT AND WIRING. HOWEVER, THE EXISTING FIRE ALARM DEVICES AND SYSTEM SHALL REMAIN ACTIVE THROUGHOUT DEMOLITION AND CONSTRUCTION UNTIL THE NEW SYSTEM IS TESTED AND OPERATIONAL.
8. REMOVE ALL ABANDONED RACEWAY, CONDUIT, WIRING AND CABLING WHETHER ABANDONED PREVIOUS TO THIS PROJECT OR AS A RESULT OF THIS PROJECT. NOT ALL ABANDONED ITEMS ARE SHOWN ON THESE PLANS AND FIELD VERIFICATION OF DEMOLITION SCOPE EXTENT IS REQUIRED.
9. REFER TO MECHANICAL DEMOLITION SHEETS AND PROVIDE ALL ELECTRICAL DEMOLITION WORK NECESSARY FOR THE MECHANICAL DEMOLITION. COORDINATE ALL REQUIRED DEMOLITION WITH THE MECHANICAL CONTRACTOR.
10. WHERE EXISTING OUTLETS ARE SHOWN TO REMAIN, REPLACE WITH NEW OUTLET AND FACEPLATE. COORDINATE WITH NEW WORK SHOWN ON NEW ELECTRICAL PLANS.
11. A PREVIOUS DEMOLITION PACKAGE WAS ISSUED TO REMOVE INTERIOR WALLS AND CEILINGS. COORDINATE ELECTRICAL DEMOLITION WORK WITH WORK OF OTHER BID PACKAGE.

SHEET KEYNOTES

1. REMOVE ELECTRICAL CONNECTIONS TO MECHANICAL EQUIPMENT TO BE REMOVED. COORDINATE WITH MECHANICAL INSTALLER.
2. RELOCATE EXISTING TRANSFORMER AND ASSOCIATED DISCONNECT TO ACCOMMODATE NEW ROOFTOP MECHANICAL EQUIPMENT IN ORDER TO MAINTAIN REQUIRED WORKING CLEARANCES. PRIOR TO RELOCATION COORDINATE WITH MECHANICAL INSTALLER AND SHOP DRAWINGS TO UNDERSTAND THE EXTENT OF RELOCATION REQUIRED. RELOCATION REQUIRES THE REMOVAL OF ALL CONDUIT AND CONDUCTORS. PROVIDE ALL NEW CONDUITS AND CONDUCTORS ASSOCIATED WITH TRANSFORMER AND DISCONNECT PER ONE-LINE DIAGRAM.

GSBS ARCHITECTS
375 WEST 200 SOUTH
SALT LAKE CITY, UT 84101
P 801.521.8600
F 801.521.7913
www.gsbsarchitects.com

REVISIONS:

1	3/27/2015	ADDENDUM #1

SPECTRUM ENGINEERS
324 S. State St., Suite 400
Salt Lake City, UT 84111
800-678-7077
801-328-5151
fax: 801-328-5155
www.spectrum-engineers.com

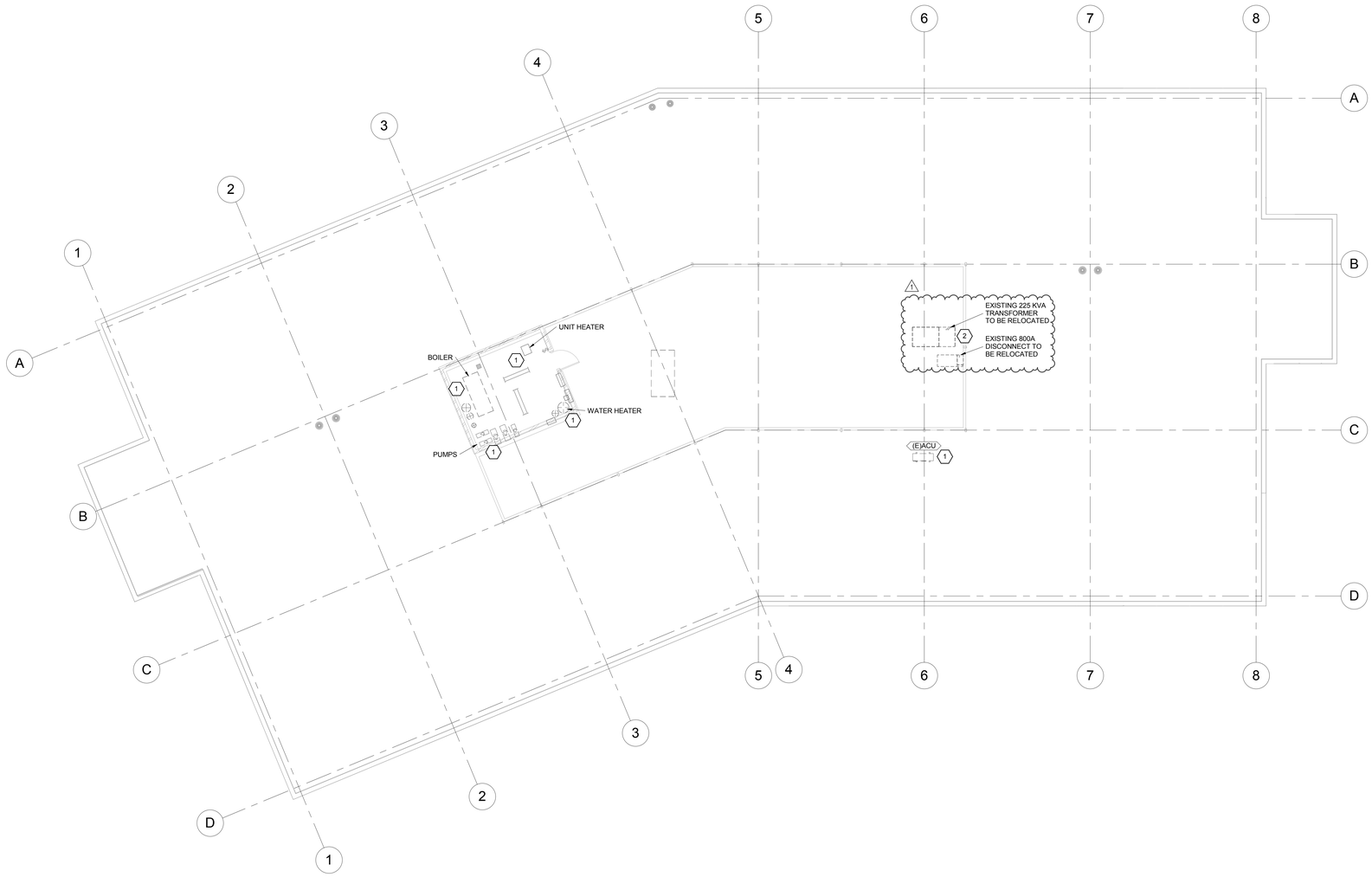

1 PENTHOUSE/ROOF ELECTRICAL DEMOLITION PLAN
SCALE: 1/8" = 1'-0"

LICENSED PROFESSIONAL ENGINEER
No. 181563
DAVID E. WESEMANN
03.09.15
STATE OF UTAH

WSU DAVIS CAMPUS D13 REMODEL

875 SOUTH UNIVERSITY PARK BLVD.
CLEARFIELD, UT 84041

DFCM

4110 STATE OFFICE BUILDING 450 NORTH STATE STREET SALT LAKE CITY, UT 84114

OWNER PROJECT NO.:	14297810
GSBS PROJECT NO.:	2014.095.00
ISSUED DATE:	03/09/2015

PENTHOUSE/ROOF ELECTRICAL DEMOLITION PLAN

ED103

C:\Users\jpm\Documents\2014058zElec_Central_jpm.rvt

3/26/2015 10:49:02 AM

GENERAL SHEET NOTES

1. PROVIDE DRY CONTACT FOR ALL REFRIGERATORS/FREEZERS TO TIE INTO BMS SYSTEM.
2. LOCATIONS OF MECHANICAL EQUIPMENT SHOWN IS APPROXIMATE. FIELD COORDINATE EXACT LOCATIONS OF EQUIPMENT PRIOR TO ROUGH-IN.

SHEET KEYNOTES

1. PROVIDE CEILING OUTLETS FOR PROJECTOR POWER AND DATA. COORDINATE EXACT LOCATION WITH ARCHITECT AND OWNER PRIOR TO ROUGH-IN.
2. PROVIDE J-BOX FOR MECHANICAL CONTROL CIRCUIT POWER. COORDINATE EXACT LOCATION WITH CONTROL CONTRACTOR PRIOR TO ROUGH-IN.
3. PROVIDE POWER STUB-UP INTO FURNITURE ISLAND FROM FLOOR BELOW. COORDINATE WITH FURNITURE LOCATION AND MANUFACTURED LAB CASEWORK REQUIREMENTS PRIOR TO CORE DRILLING THROUGH THE FLOOR. FURNITURE OUTLETS ARE FURNISHED BY OTHERS, WIRED BY ELEC.
4. PROVIDE (2) - NEMA L6-20 OUTLETS AND (2) - NEMA L6-30 OUTLETS AT THIS LOCATION AND AS INDICATED IN ELEVATION.
5. J-BOX FOR POWER CONNECTION TO LABORATORY SERVICE PANEL FOR EMERGENCY GAS SHUT OFF. COORDINATE EXACT LOCATION AND CONNECTION REQUIREMENTS WITH MECHANICAL CONTRACTOR PRIOR TO ROUGH-IN.
6. COORDINATE EXACT LOCATION OF AV JUNCTION BOX WITH FURNITURE AND MILLWORK, AND WITH OWNER AND ARCHITECT SUCH THAT AV J-BOX OPENINGS LINES UP WITH OPENING IN FURNITURE.
7. PROVIDE WIREMOLD SURFACE RACEWAY AND FINISHED BOXES ON COLUMN.
8. PROVIDE POWER AND DATA STUB-UPS INTO TEACHER FURNITURE ISLAND FROM FLOOR BELOW. COORDINATE WITH FURNITURE LOCATION AND MANUFACTURED LAB CASEWORK REQUIREMENTS PRIOR TO CORE DRILLING THROUGH THE FLOOR.
9. IN THIS SPACE FURNITURE OUTLETS ARE TO BE PROVIDED BY FURNITURE MANUFACTURER. PROVIDE CONDUIT AND WIRING TO DEVICES. COORDINATE CONNECTION REQUIREMENTS WITH FURNITURE INSTALLER AND MANUFACTURED LAB CASEWORK REQUIREMENTS.
10. COORDINATE EXACT LOCATION OF OUTLETS WITH ARCHITECTURAL ELEVATIONS AND EQUIPMENT.
11. PROVIDE RECESSED POWER AND DATA OUTLETS FOR FLAT-PANEL MONITORS. SEE DETAIL AND COORDINATE EXACT MOUNTING REQUIREMENTS WITH ARCHITECT/OWNER.
12. PROVIDE T1A-607 TYPE GROUND BUS. CHATSWORTH 40153-012 OR APPROVED EQUIVALENT.
13. PROVIDE ELECTRICAL CONNECTIONS TO FUME HOOD. ALSO PROVIDE #8CU GR CONNECTION TO EQUIPMENT GROUNDING SYSTEM COORDINATE WITH MANUFACTURER.
14. NEW SURGE PROTECTION (SPD) MOUNTED ABOVE LDP.

GSBS ARCHITECTS
375 WEST 200 SOUTH
SALT LAKE CITY, UT 84101
P 801.521.8600
F 801.521.7913
www.gsbsarchitects.com

REVISIONS:

1	3/27/2015	ADDENDUM #1

SPECTRUM ENGINEERS
324 S. State St., Suite 400
Salt Lake City, UT 84111
800-678-7077
801-328-5151
fax: 801-328-5155
www.spectrum-engineers.com

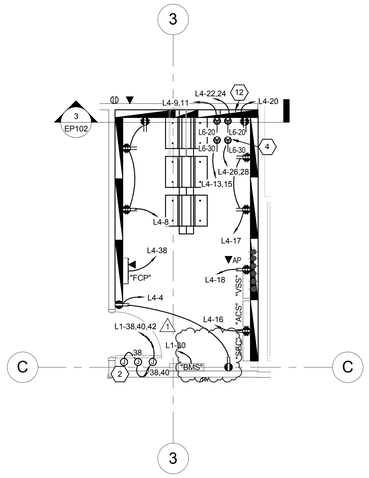

2 SECOND LEVEL - ENLARGED COMM ROOM POWER PLAN

SCALE: 1/4" = 1'-0"

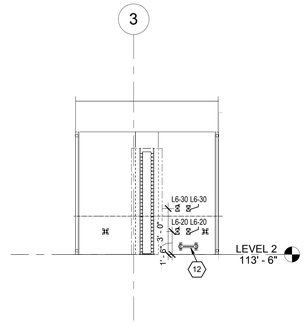

3 COMM ROOM ELEVATION

SCALE: 1/4" = 1'-0"

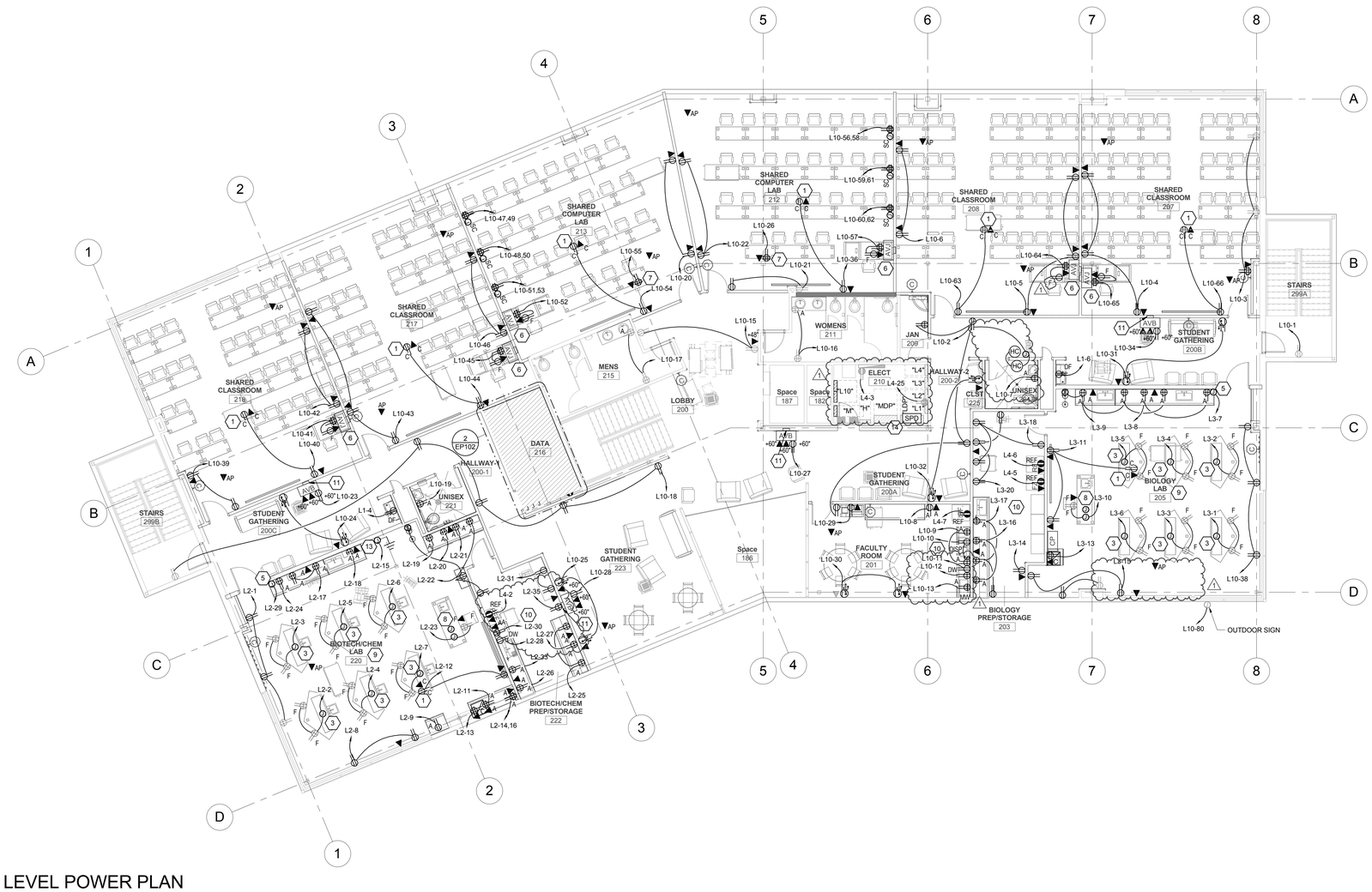

1 SECOND LEVEL POWER PLAN

SCALE: 1/8" = 1'-0"

WSU DAVIS CAMPUS D13 REMODEL

875 SOUTH UNIVERSITY PARK BLVD.
CLEARFIELD, UT 84041

DFCM

4110 STATE OFFICE BUILDING 450 NORTH
STATE STREET SALT LAKE CITY, UT 84114

OWNER PROJECT NO.:	14297810
GSBS PROJECT NO.:	2014.095.00
ISSUED DATE:	03/09/2015

SECOND LEVEL POWER PLAN

EP102

C:\Users\jpm\Documents\2014058 2Elec Central_jpm.rvt

3/26/2015 10:52:10 AM

GENERAL SHEET NOTES

1. PROVIDE DRY CONTACT FOR ALL REFRIGERATORS/FREEZERS TO TIE INTO BMS SYSTEM.
2. LOCATIONS OF MECHANICAL EQUIPMENT SHOWN IS APPROXIMATE. FIELD COORDINATE EXACT LOCATIONS OF EQUIPMENT PRIOR TO ROUGH-IN.

SHEET KEYNOTES

1. ROOF MOUNTED RECEPTACLE. PROVIDE INDEPENDENT SUPPORT SUCH AS UNISTRUT OR RIGID CONDUIT TO SUPPORT RECEPTACLE. INSTALL NEAR ROOF MOUNTED MECHANICAL EQUIPMENT.
2. RECONNECT EXISTING POWER AND LIGHTING CIRCUITS TO REMAIN IN PENTHOUSE.
3. 120V CIRCUIT FOR MECHANICAL CONTROLS AND AUXILIARY CIRCUITS. COORDINATE WITH MECHANICAL AND PROVIDE ALL CONNECTIONS.
4. RECONNECT EXISTING UNIT HEATER, PANELS, AND OTHER MECHANICAL EQUIPMENT THAT REMAINS IN PENTHOUSE ROOM.
5. RELOCATE EXISTING TRANSFORMER AND ASSOCIATED DISCONNECT TO ACCOMMODATE NEW ROOFTOP MECHANICAL EQUIPMENT IN ORDER TO MAINTAIN REQUIRED WORKING CLEARANCES. PRIOR TO RELOCATION COORDINATE WITH MECHANICAL INSTALLER AND SHOP DRAWINGS TO UNDERSTAND THE EXTENT OF RELOCATION REQUIRED. RELOCATION REQUIRES THE REMOVAL OF ALL CONDUIT AND CONDUCTORS. PROVIDE ALL NEW CONDUITS AND CONDUCTORS ASSOCIATED WITH TRANSFORMER AND DISCONNECT PER ONE-LINE DIAGRAM.

GSBS ARCHITECTS
375 WEST 200 SOUTH
SALT LAKE CITY, UT 84101
P 801.521.8600
F 801.521.7913
www.gsbsarchitects.com

REVISIONS:

1	3/27/2015	ADDENDUM #1

SPECTRUM ENGINEERS
324 S. State St., Suite 400
Salt Lake City, UT 84111
800-678-7077
801-328-5151
fax: 801-328-5155
www.spectrum-engineers.com

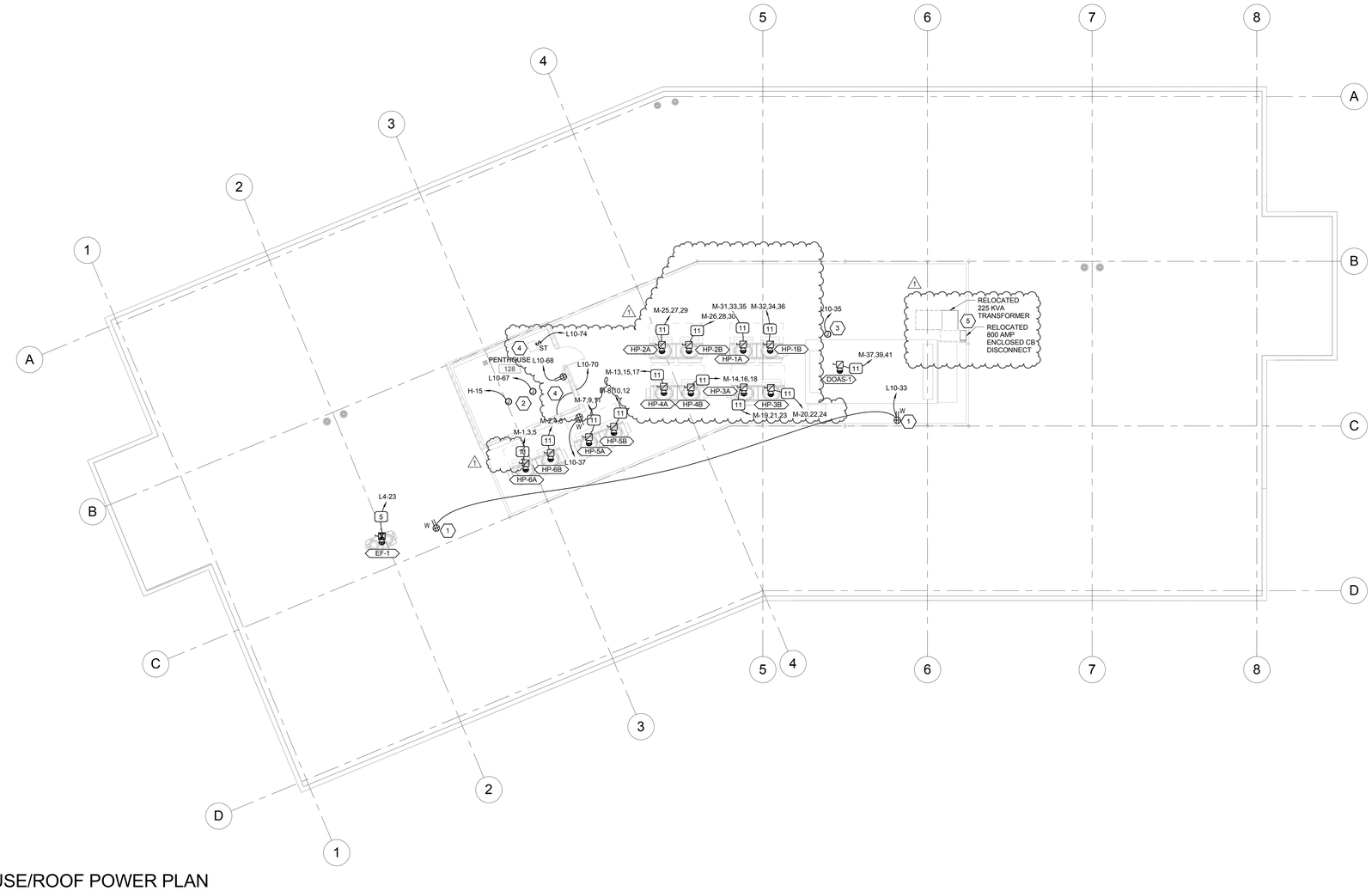

1 PENTHOUSE/ROOF POWER PLAN
SCALE: 1/8" = 1'-0"

LICENSED PROFESSIONAL ENGINEER
No. 181563
DAVID E. WESEMANN
03.09.15
STATE OF UTAH

WSU DAVIS CAMPUS D13 REMODEL

875 SOUTH UNIVERSITY PARK BLVD.
CLEARFIELD, UT 84041

DFCM

4110 STATE OFFICE BUILDING 450 NORTH
STATE STREET SALT LAKE CITY, UT 84114

OWNER PROJECT NO.:	14297810
GSBS PROJECT NO.:	2014.095.00
ISSUED DATE:	03/09/2015

PENTHOUSE/ROOF POWER PLAN

EP103

C:\Users\jpm\Documents\2014058 2Elec Central_jpm.rvt

3/26/2015 10:52:14 AM

GENERAL SHEET NOTES

1. PROVIDE NEMA 3R ENCLOSURES FOR EQUIPMENT LOCATED OUTDOORS. REFER TO PLANS FOR EQUIPMENT LOCATIONS.
2. REFER TO PLANS FOR CONSTRAINTS ON PHYSICAL DIMENSIONS AND CLEARANCE REQUIREMENTS OF EQUIPMENT. PROVIDE EQUIPMENT DIMENSIONS THAT FALL WITHIN THE CONSTRAINTS OF EACH SPECIFIC LOCATION.
3. ALL EQUIPMENT SHALL BE CONSTRUCTED AND BRACED FOR THE SEISMIC CONDITIONS OF THE PROJECT. REFER TO ELECTRICAL SPECIFICATIONS FOR REQUIREMENTS.
4. PROVIDE PERFORMANCE TESTING FOR GROUND-FAULT PROTECTION SYSTEMS ON SITE WITH A WRITTEN RECORD OF THIS TEST SUBMITTED TO THE AUTHORITY HAVING JURISDICTION PER 2011 NEC 230.95(C).

SHEET KEYNOTES

1. PROVIDE NEW CIRCUIT BREAKER AS INDICATED IN EXISTING DISTRIBUTION PANELBOARD. PROVIDE MINIMUM 22 KAIC RATING.
2. REMOVE EXISTING PANELBOARD WITH ASSOCIATED FEEDER CONDUIT AND WIRING. ANY BRANCH WIRING THAT REMAINS SHALL BE EXTENDED TO NEW PANELBOARDS.
3. PROVIDE NEW VERIS METER WITH ASSOCIATED CT'S AND WIRING, AND CONNECT TO BMS SYSTEM PER WSY STANDARDS. COORDINATE WITH WSU AND BMS INSTALLER.
4. BID ALTERNATE #2: REMOVE EXISTING ALUMINUN CONDUCTORS AND CONDUIT AND REPLACE WITH NEW COPPER CONDUCTORS AND CONDUIT AS INDICATED.
5. REMOVE EXISTING PRIMARY AND SECONDARY FEEDER CONDUCTORS AND CONDUITS ASSOCIATED WITH TRANSFORMER AND DISCONNECT TO BE RELOCATED. PROVIDE ALL NEW FEEDER CONDUITS AND CONDUCTORS AS INDICATED AND RECONNECT TO RELOCATED EQUIPMENT.
6. REMOVE EXISTING CONDUIT AND WIRING TO EXISTING ROOF TOP EQUIPMENT TO BE REMOVED. REMOVE EXISTING 300/3 CB.
7. PROVIDE NEW 35KAIC CB IN EXISTING PANEL AS INDICATED.
8. PROVIDE SHUNT-TRIP MAIN BREAKERS TO ACTIVATE WITH EPO SWITCHES IN ASSOCIATED ROOM.
9. REMOVE EXISTING 200/3 CIRCUIT BREAKER AND PROVIDE NEW 225/3, 22 KAIC CIRCUIT BREAKER AS INDICATED.
10. REMOVE EXISTING FEEDER CONDUIT AND WIRING AND PROVIDE NEW AS INDICATED.

FAULT CURRENT TABLE

BUS	FAULT CURRENT
H	35,000 SCA
L1	22,000 SCA
L2	22,000 SCA
L3	22,000 SCA
L4	22,000 SCA
L5	22,000 SCA
L6	22,000 SCA
L7	22,000 SCA
L8	22,000 SCA
L9	22,000 SCA
L10	22,000 SCA
M	35,000 SCA

PROVIDE FULLY RATED CIRCUIT BREAKERS IN PANELBOARDS FOR THE FAULT CURRENT SHOWN. SERIES RATINGS WITH NEXT LEVEL UPSTREAM OVERCURRENT PROTECTIVE DEVICES ARE PERMITTED SUBJECT TO FACTORY UL DOCUMENTATION OF SERIES RATING SUBMITTED TO ENGINEER. IF DEVICE OR EQUIPMENT FAULT CURRENT RATING IS NOT SHOWN, ASSUME 100,000 AIC.

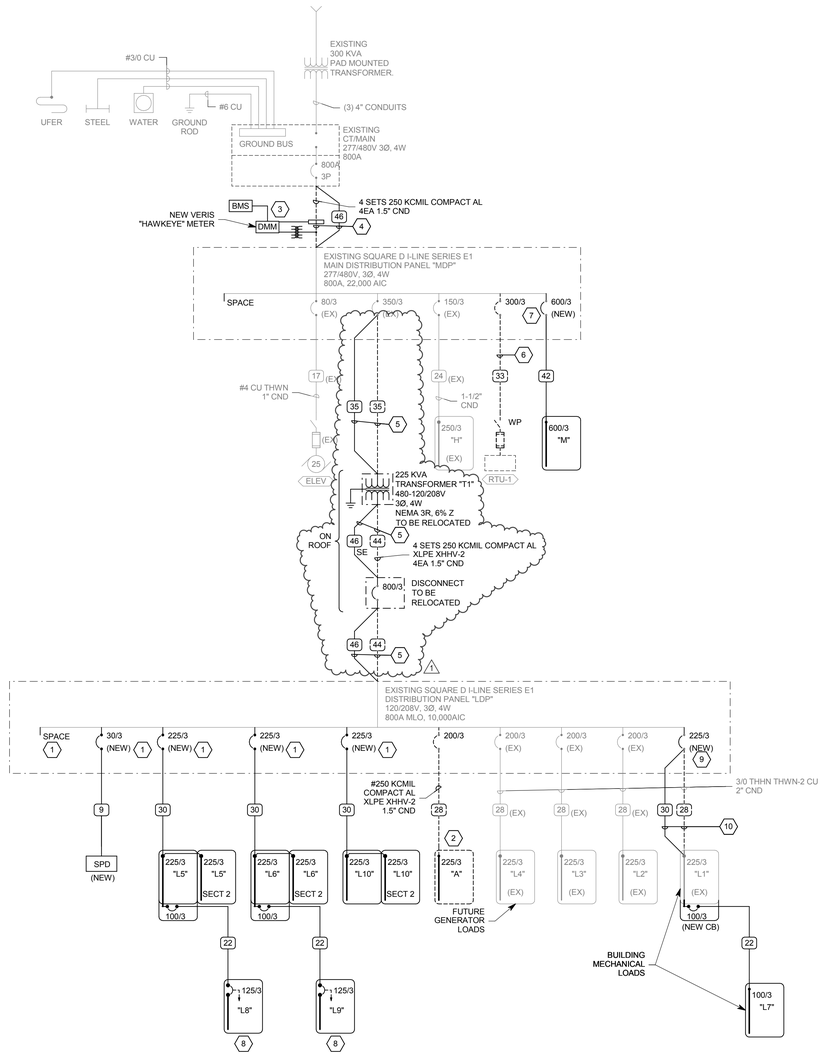

1 POWER ONE-LINE DIAGRAM

SCALE: NTS

COPPER CONDUCTOR AND CONDUIT SCHEDULE

SCHEDULE NUMBER

SUBSCRIPT (NOTE 5)

(E.G. 5 /G)

SYM	AMP	HH AMPS	CONDUIT SIZE	CONDUCTOR (NOTE 1) QTY	SIZE	G	IG/HH	SE	NOTES
1	20	-	.75	2	12	12	12	8	2
2	20	-	.75	3	12	12	12	8	2,3
3	20	24	.75	4	12	12	12	8	2,3
4	30	-	.75	2	10	10	10	8	2
5	30	-	.75	3	10	10	10	8	2
6	30	32	.75	4	10	10	10	8	2
7	40	-	1	2	8	10	8	6	2
8	40	-	1	3	8	10	8	6	2
9	40	44	1	4	8	10	8	6	2
10	55	-	1	2	6	10	8	4	2
11	55	-	1	3	6	10	8	4	2
12	55	60	1.25	4	6	10	8	4	2
13	70	-	1	2	4	8	4	2	2
14	70	-	1.25	3	4	8	4	2	2
15	70	76	1.25	4	4	8	4	2	2
16	85	-	1.25	2	3	8	3	2	2
17	85	-	1.25	3	3	8	3	2	2
18	85	92	1.25	4	3	8	3	2	2
19	95	-	1.25	3	2	8	2	2	2
20	95	104	1.50	4	2	8	2	2	2
21	130	-	1.50	3	1	6	2	2	2
22	130	116	1.50	4	1	6	2	2	2
23	150	-	2	3	1/0	6	2	1/0	2
24	150	136	2	4	1/0	6	2	1/0	2
25	175	-	2	3	2/0	6	2	2/0	2
26	175	156	2	4	2/0	6	2	2/0	2
27	200	-	2	3	3/0	6	2	2/0	2
28	200	180	2.50	4	3/0	6	2	2/0	2
29	230	-	2.50	3	4/0	4	2	2/0	2
30	230	208	2.50	4	4/0	4	2	2/0	2
31	255	-	2.50	3	250	4	1	2/0	2
32	255	232	2.50	4	250	4	1	2/0	2
33	310	-	3	3	350	3	1/0	3/0	2
34	310	280	3	4	350	3	1/0	3/0	2
35	380	-	3.50	3	500	3	3/0	3/0	2
36	380	344	4	4	500	3	3/0	3/0	2
37	400	-	2 EA 2	3	3/0	3	3/0	3/0	2
38	400	360	2 EA 2.50	4	3/0	3	3/0	3/0	2
39	510	-	2 EA 2.50	3	250	1	4/0	3/0	2
40	510	464	2 EA 3	4	250	1	4/0	3/0	2
41	620	-	2 EA 3	3	350	1/0	4/0	3/0	2,4
42	620	560	2 EA 3	4	350	1/0	4/0	3/0	2,4
43	760	-	2 EA 3.50	3	500	1/0	4/0	3/0	2,4
44	760	688	2 EA 4	4	500	1/0	4/0	3/0	2,4
45	855	-	3 EA 3	3	300	2/0	4/0	3/0	2,4
46	855	768	3 EA 3	4	300	2/0	4/0	3/0	2,4
47	1000	-	3 EA 3.50	3	400	2/0	4/0	3/0	4
48	1000	912	3 EA 3.50	4	400	2/0	4/0	3/0	4
49	1140	-	3 EA 4	3	500	3/0	4/0	3/0	4
50	1140	1032	3 EA 4	4	500	3/0	4/0	3/0	4
51	1240	-	4 EA 3	3	350	3/0	4/0	3/0	4
52	1240	1120	4 EA 3	4	350	3/0	4/0	3/0	4
53	1675	1520	5 EA 4	4	400	4/0	4/0	4/0	4
54	2010	1824	6 EA 4	4	400	250	250	250	4
55	2660	2408	7 EA 4	4	500	350	350	350	4
56	3040	2752	8 EA 4	4	500	500	500	500	4
57	4180	3784	11 EA 4	4	500	500	500	500	4
58	-	-	5 EA 4	-	-	-	-	-	6
59	-	-	5	-	-	-	-	-	6
60	-	-	10 EA 4	-	-	-	-	-	6

CONDUIT AND CONDUCTOR SCHEDULE NOTES

1. CONDUCTORS SHOWN ARE SHOWN FOR EACH CONDUIT WITH MODIFICATIONS AS NOTED IN NOTE 5. ALL CONDUCTORS SHOWN ARE THWN UNLESS OTHERWISE NOTED.
2. PROVIDE EQUIPMENT GROUND CONDUCTORS PER TABLE 250-122 WHEN CIRCUIT BREAKERS ARE SIZED GREATER THAN AMPERE RATING SHOWN IN TABLE.
3. PROVIDE #10 NEUTRALS FOR MULTIWIRE BRANCH CIRCUITS SERVING COMPUTERS.
4. GROUND (G) CONDUCTOR MAY BE DELETED ON SERVICE ENTRANCE CONDUCTORS.
5. SYMBOL SUBSCRIPTS:
   - "2N": INCLUDE TWO NEUTRAL CONDUCTORS, SIZED AS SCHEDULED FOR PHASED AND NEUTRAL CONDUCTORS.
   - "FG": FULL SIZE GROUND, SIZE EQUIPMENT GROUNDING CONDUCTOR TO BE SAME SIZE AS THE PHASE CONDUCTORS.
   - "HH": NEUTRAL CURRENTS EXIST DUE TO HIGH HARMONIC "NONLINEAR" LOADS. CURRENT CARRYING CONDUCTORS DERATED ACCORDINGLY. PROVIDE THE IG/HH SIZE FOR THE EQUIPMENT GROUNDING CONDUCTOR.
   - "IG": INCLUDE IG (INSULATED/ISOLATED GROUND CONDUCTOR) SCHEDULED ALONG WITH THE GROUND OF EQUIPMENT GROUND CONDUCTOR.
   - "SE": SUBSTITUTE "SE" CONDUCTOR FOR "G" CONDUCTOR SHOWN, WHICH IS SIZED FOR THE GROUNDING OF THE SECONDARY OF THE SEPARATELY DERIVED SYSTEM.
6. RACEWAY ONLY. CONDUCTORS PROVIDED BY UTILITY.

GSBS ARCHITECTS
375 WEST 200 SOUTH
SALT LAKE CITY, UT 84101
P 801.521.8600
F 801.521.7913
www.gsbsarchitects.com

REVISIONS:

1	3/27/2015	ADDENDUM #1

SPECTRUM ENGINEERS
324 S. State St., Suite 400
Salt Lake City, UT 84111
800-678-7077
801-328-5151
fax: 801-328-5155
www.spectrum-engineers.com

LICENSED PROFESSIONAL ENGINEER No. 181563 DAVID E. WESEMANN 03.09.15 STATE OF UTAH

WSU DAVIS CAMPUS D13 REMODEL

875 SOUTH UNIVERSITY PARK BLVD.
CLEARFIELD, UT 84041

DFCM

4110 STATE OFFICE BUILDING 450 NORTH STATE STREET SALT LAKE CITY, UT 84114

OWNER PROJECT NO.:	14297810
GSBS PROJECT NO.:	2014.095.00
ISSUED DATE:	03/09/2015

ONE-LINE DIAGRAMS

EP601

C:\Users\jpm\Documents\2014095.EEdec Central_jpm.rvt
3/26/2015 10:52:35 AM

EQUIPMENT SCHEDULE

WEBER STATE UNIVERSITY DAVIS CAMPUS D13 REMODEL

EQUIPMENT SCHEDULE KEY
E - DIVISION 26
Q - FURNISHED WITH EQUIPMENT
* - COORDINATE WITH THE DIVISION 23 TEMPERATURE CONTROL INSTALLER
** - AUTOMATIC CONTROL WIRING BY DIVISION 23

		LOAD DATA								OVERCURRENT PROTECTION			DISCONNECT			STARTER										
MARK	ITEM DESCRIPTION	HP	kW	MCA	FLA	VOLT	PH	Hz	WIRE AND CONDUIT SIZE	FURN BY	DEVICE	LOCATION	FURN BY	DEVICE	LOCATION	FURN BY	DEVICE	SIZES	SELECTOR SWITCH	PILOT LAMP	NORMALLY OPEN CONTACT	NORMALLY CLOSED CONTACT	PHASE FAILURE RELAY	NOTES	MARK
AC-1	AIR COMPRESSOR	1/2	-	-	9.8	120	1	60	2 #12, 12 GR 0.75" CND	E	20/1 CB		E	30A/1P NF	ADJ TO EQUIP	Q									AC-1
AD-1	AIR DRYER	1	-	-	16	120	1	60	2 #10, 10 GR 0.75" CND	E	30/1 CB		E	TOGGLE SWITCH	ADJ TO EQUIP	Q									AD-1
BC-1	BRANCH CONTROLLER	-	-	-	1.7	208	1	60	2 #12, 12 GR 0.75" CND	E	20/2 CB	L7	E	30A/2P FRS-5	ADJ TO EQUIP	Q								2	BC-1
BC-2	BRANCH CONTROLLER	-	-	-	1.7	208	1	60	2 #12, 12 GR 0.75" CND	E	20/2 CB	L7	E	30A/2P FRS-5	ADJ TO EQUIP	Q								2	BC-2
BC-3	BRANCH CONTROLLER	-	-	-	1.7	208	1	60	2 #12, 12 GR 0.75" CND	E	20/2 CB	L7	E	30A/2P FRS-5	ADJ TO EQUIP	Q								2	BC-3
BC-4	BRANCH CONTROLLER	-	-	-	1.7	208	1	60	2 #12, 12 GR 0.75" CND	E	20/2 CB	L1	E	30A/2P FRS-5	ADJ TO EQUIP	Q								2	BC-4
BC-5	BRANCH CONTROLLER	-	-	-	1.7	208	1	60	2 #12, 12 GR 0.75" CND	E	20/2 CB	L1	E	30A/2P FRS-5	ADJ TO EQUIP	Q								2	BC-5
BC-6	BRANCH CONTROLLER	-	-	-	1.7	208	1	60	2 #12, 12 GR 0.75" CND	E	20/2 CB	L1	E	30A/2P FRS-5	ADJ TO EQUIP	Q								2	BC-6
CL-1	CEILING CASSETTE UNIT	-	-	-	0.3	208	1	60	2 #12, 12 GR 0.75" CND	E	20/2 CB		E	30A/2P FRS-5	ADJ TO EQUIP	Q								2	CL-1
CL-2	CEILING CASSETTE UNIT	-	-	-	0.4	208	1	60	2 #12, 12 GR 0.75" CND	E	20/2 CB	L7	E	30A/2P FRS-5	ADJ TO EQUIP	Q								2	CL-2
CL-3	CEILIING CASSETTE UNIT	-	-	-	0.4	208	1	60	2 #12, 12 GR 0.75" CND	E	20/2 CB		E	30A/2P FRS-5	ADJ TO EQUIP	Q								2	CL-3
CNC-1	WSU EQUIPMENT	30	-	-	40	480	3	60	3 #4, #8 GR 1.25" CND	E	70/3 CB		E	100A/3P FRS-50	ADJ TO EQUIP	Q									CNC-1
DCP-1	DOMESTIC HOT WATER RECIRCULATION PUMP	-	-	-	1	120	1	60	2 #12, 12 GR 0.75" CND	E	20/1 CB	L7	E	OUTLET		Q									DCP-1
DOAS-1	DEDICATED OUTDOOR AIR SYSTEM	(4) 7.5HP	-	-	40	480	3	60	3 #6, #10 GR 1" CND	E	-	M	E	60A/3P FRS-45	ADJ TO EQUIP	Q								4	DOAS-1
EF-1	EXHAUST FAN	1/2	-	-	9.8	120	1	60	2 #10, 10 GR 0.75" CND	E	20/1 CB	L4	E	THERMAL SWITCH	ADJ TO EQUIP	E	(2) FVNR	0	HOA	R,G	2	2	YES	1,3	EF-1
FC-D12	FAN COIL	-	-	-	1.2	208	1	60	2 #12, 12 GR 0.75" CND	E	20/2 CB		E	30A/2P FRS-5	ADJ TO EQUIP	Q								2	FC-D12
FC-D18	FAN COIL	-	-	-	1.6	208	1	60	2 #12, 12 GR 0.75" CND	E	20/2 CB	L1	E	30A/2P FRS-5	ADJ TO EQUIP	Q								2	FC-D18
FC-D36	FAN COIL	-	-	-	3.5	208	1	60	2 #12, 12 GR 0.75" CND	E	20/2 CB	L7	E	30A/2P FRS-10	ADJ TO EQUIP	Q								2	FC-D36
FC-D48	FAN COIL	-	-	-	3.5	208	1	60	2 #12, 12 GR 0.75" CND	E	20/2 CB		E	30A/2P FRS-10	ADJ TO EQUIP	Q								2	FC-D48
FC-D54	FAN COIL	-	-	-	3.5	208	1	60	2 #12, 12 GR 0.75" CND	E	20/2 CB		E	30A/2P FRS-10	ADJ TO EQUIP	Q								2	FC-D54
FC-F24	FAN COIL	-	-	-	0.6	208	1	60	2 #12, 12 GR 0.75" CND	E	20/2 CB	L7	E	30A/2P FRS-5	ADJ TO EQUIP	Q								2	FC-F24
FC-W12	FAN COIL	-	-	-	0.4	208	1	60	2 #12, 12 GR 0.75" CND	E	20/2 CB		E	30A/2P FRS-5	ADJ TO EQUIP	Q								2	FC-W12
FC-W24	FAN COIL	-	-	-	0.6	208	1	60	2 #12, 12 GR 0.75" CND	E	20/2 CB	L4	E	30A/2P FRS-5	ADJ TO EQUIP	Q								1,2	FC-W24
HP-1A	HEAT PUMP	-	-	32	30	480	3	60	3 #6, #10 GR 1" CND	E	60/3 CB	M	E	60A/3P FRS-35	ADJ TO EQUIP	Q								2	HP-1A
HP-1B	HEAT PUMP	-	-	32	30	480	3	60	3 #6, #10 GR 1" CND	E	60/3 CB	M	E	60A/3P FRS-35	ADJ TO EQUIP	Q								2	HP-1B
HP-2A	HEAT PUMP	-	-	32	30	480	3	60	3 #6, #10 GR 1" CND	E	60/3 CB	M	E	60A/3P FRS-35	ADJ TO EQUIP	Q								2	HP-2A
HP-2B	HEAT PUMP	-	-	32	30	480	3	60	3 #6, #10 GR 1" CND	E	60/3 CB	M	E	60A/3P FRS-35	ADJ TO EQUIP	Q								2	HP-2B
HP-3A	HEAT PUMP	-	-	32	30	480	3	60	3 #6, #10 GR 1" CND	E	60/3 CB	M	E	60A/3P FRS-35	ADJ TO EQUIP	Q								2	HP-3A
HP-3B	HEAT PUMP	-	-	32	30	480	3	60	3 #6, #10 GR 1" CND	E	60/3 CB	M	E	60A/3P FRS-35	ADJ TO EQUIP	Q								2	HP-3B
HP-4A	HEAT PUMP	-	-	32	30	480	3	60	3 #6, #10 GR 1" CND	E	60/3 CB	M	E	60A/3P FRS-35	ADJ TO EQUIP	Q								2	HP-4A
HP-4B	HEAT PUMP	-	-	32	30	480	3	60	3 #6, #10 GR 1" CND	E	60/3 CB	M	E	60A/3P FRS-35	ADJ TO EQUIP	Q								2	HP-4B
HP-5A	HEAT PUMP	-	-	32	30	480	3	60	3 #6, #10 GR 1" CND	E	60/3 CB	M	E	60A/3P FRS-35	ADJ TO EQUIP	Q								2	HP-5A
HP-5B	HEAT PUMP	-	-	32	30	480	3	60	3 #6, #10 GR 1" CND	E	60/3 CB	M	E	60A/3P FRS-35	ADJ TO EQUIP	Q								2	HP-5B
HP-6A	HEAT PUMP	-	-	32	30	480	3	60	3 #6, #10 GR 1" CND	E	60/3 CB	M	E	60A/3P FRS-35	ADJ TO EQUIP	Q								2	HP-6A
HP-6B	HEAT PUMP	-	-	32	30	480	3	60	3 #6, #10 GR 1" CND	E	60/3 CB	M	E	60A/3P FRS-35	ADJ TO EQUIP	Q								2	HP-6B
HPWH-1	HYBRID ELECTRIC HEAT PUMP WATER HEATER	-	-	-	24	208	1	60	2 #8, #10 GR 1" CND	E	40/2 CB	L1	E	60A/2P FRS-35	ADJ TO EQUIP	Q									HPWH-1
HPWH-2	HYBRID ELECTRIC HEAT PUMP WATER HEATER	-	-	-	24	208	1	60	2 #8, #10 GR 1" CND	E	40/2 CB	L1	E	60A/2P FRS-35	ADJ TO EQUIP	Q									HPWH-2
HPWH-3	HYBRID ELECTRIC HEAT PUMP WATER HEATER	-	-	-	24	208	1	60	2 #8, #10 GR 1" CND	E	40/2 CB	L1	E	60A/2P FRS-35	ADJ TO EQUIP	Q									HPWH-3
TF-1	TRANSFER FAN	1/3	-	-	7.2	120	1	60	2 #12, 12 GR 0.75" CND	E	20/1 CB	L7	E	THERMAL SWITCH	ADJ TO EQUIP	E	FVNR	0	HOA	R,G	2	2	YES		TF-1
TF-2	TRANSFER FAN	1/2	-	-	9.8	120	1	60	2 #12, 12 GR 0.75" CND	E	20/1 CB	L4	E	THERMAL SWITCH	ADJ TO EQUIP	E	FVNR	0	HOA	R,G	2	2	YES	1	TF-2

NOTES:

1. FAN ON FUTURE EMERGENCY POWER.

2. PROVIDE 0.75" CND WITH INTERLOCK WIRING BETWEEN OUTDOOR HEAT PUMP AND ASSOCIATED INDOOR EVAPORATOR.

3. REDUNDANT FANS. PROVIDE STARTER FOR EACH.

4. PROVIDE CIRCUIT TO EQUIPMENTS SINGLE POINT OF CONNECTION.

GSBS ARCHITECTS
375 WEST 200 SOUTH
SALT LAKE CITY, UT 84101
P 801.521.8600
F 801.521.7913
www.gsbsarchitects.com

REVISIONS:

1	3/27/2015	ADDENDUM #1

SPECTRUM ENGINEERS
324 S. State St., Suite 400
Salt Lake City, UT 84111
800-678-7077
801-328-5151
fax: 801-328-5155
www.spectrum-engineers.com

LICENSED PROFESSIONAL ENGINEER
No. 181563
DAVID E. WESEMANN
03.09.15
STATE OF UTAH

WSU DAVIS CAMPUS D13 REMODEL

875 SOUTH UNIVERSITY PARK BLVD.
CLEARFIELD, UT 84041

DFCM

4110 STATE OFFICE BUILDING 450 NORTH STATE STREET SALT LAKE CITY, UT 84114

OWNER PROJECT NO.:	14297810
GSBS PROJECT NO.:	2014.095.00
ISSUED DATE:	03/09/2015

EQUIPMENT SCHEDULE

EP602

C:\Users\jpm\Documents\2014058 2Elec Central_jpm.rvt
3/26/2015 10:52:38 AM

GENERAL SHEET NOTES

1. CIRCUIT ALL EXIT SIGNS, BATTERY PACKS AND NIGHTLIGHTS (NL) TO UNSWITCHED LEG OF ASSOCIATED CIRCUIT.
2. COORDINATE ALL LIGHTING IN MECHANICAL, ELECTRICAL AND IT/COMM/DATA ROOMS WITH EQUIPMENT TO AVOID DUCTS, PIPES, ETC.

SHEET KEYNOTES

1. CIRCUIT ELEVATOR LIGHT(S) WITH ELEVATOR ROOM OUTLET.

GSBS ARCHITECTS

375 WEST 200 SOUTH
SALT LAKE CITY, UT 84101

P 801.521.8600
F 801.521.7913

www.gsbsarchitects.com

REVISIONS:

1	3/27/2015	ADDENDUM #1

SPECTRUM ENGINEERS
324 S. State St., Suite 400
Salt Lake City, UT 84111
800-678-7077
801-328-5151
fax: 801-328-5155
www.spectrum-engineers.com

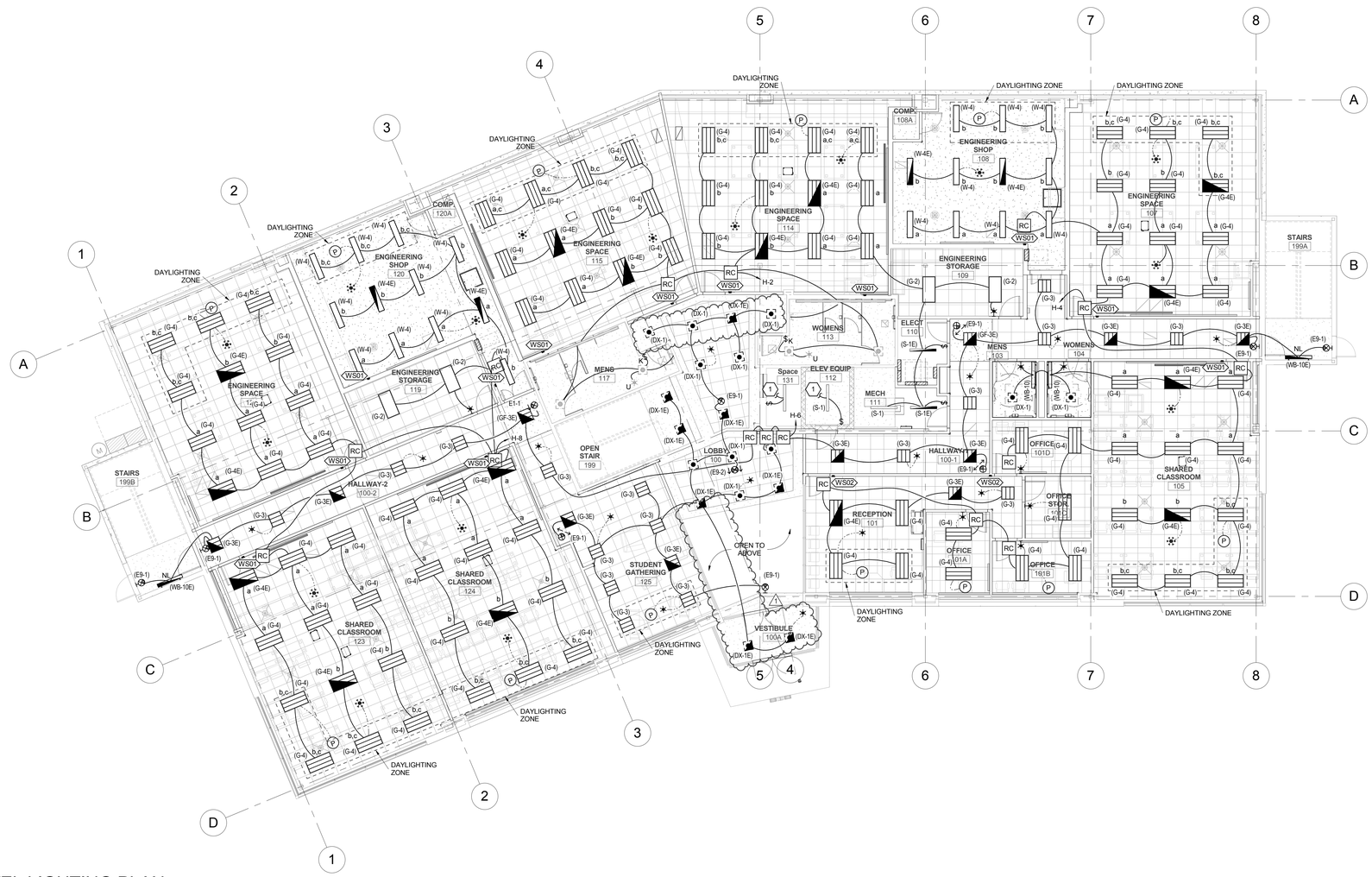

1 MAIN LEVEL LIGHTING PLAN
SCALE: 1/8" = 1'-0"

LICENSED PROFESSIONAL ENGINEER
No. 181563
DAVID E. WESEMANN
03.09.15
STATE OF UTAH

WSU DAVIS CAMPUS D13 REMODEL

875 SOUTH UNIVERSITY PARK BLVD.
CLEARFIELD, UT 84041

DFCM

4110 STATE OFFICE
BUILDING 450 NORTH
STATE STREET SALT
LAKE CITY, UT 84114

OWNER PROJECT NO.:	14297810
GSBS PROJECT NO.:	2014.095.00
ISSUED DATE:	03/09/2015

MAIN LEVEL LIGHTING PLAN

EL101

C:\Users\jpm\Documents\2014095BZElec CentralJpm.rvt

3/26/2015 10:49:24 AM

INTERIOR LIGHTING FIXTURE SCHEDULE

ABBREVIATIONS

LUMINAIRE OPTIONS

- ARHR - AIR RETURN AND HEAT REJECTION
- DL - DAMP LOCATION
- EQC - EARTHQUAKE CLIPS
- F - FUSING
- HLD - HINGED AND LATCHED DOOR
- HS - HOUSE SIDE SHIELD
- PS - PHOTOCELL SWITCH
- QRS - QUARTZ RESTRIKE
- ST - STATIC
- WG - WIRE GUARD
- WL - WET LOCATION

MOUNTING

- B - BASE
- C - CEILING
- F - FLANGE
- G - GRID
- P - PENDANT
- PL - POLE
- R - RECESSED
- S - SURFACE
- W - WALL

EMERGENCY

- NE - NORMAL AND EMERGENCY CONNECTIONS
- EB - EMERGENCY BATTERY PACK
- ET - EMERGENCY TRANSFER DEVICE

BALLAST

- IS - INSTANT START
- RS - RAPID START
- PS - PROGRAM START, PARALLEL LAMP OPERATION
- PSMH - PULSE START METAL HALLIDE (CWA OR ELECTRONIC)
- PPLF - PROVIDE POWER LINE FILTER
- LVTM - LOW VOLTAGE TRANSFORMER (MAGNETIC)
- LVTE - LOW VOLTAGE TRANSFORMER (ELECTRONIC)

DIMMING BALLAST

- D2 - 2 WIRE DIMMER
- D3 - 3 WIRE DIMMER
- D4 - 4 WIRE DIMMER
- DD - DIGITAL DIMMER
- SDP - STEP DIMMER BALLAST

BALLAST NOTATION

ANSI WATTS = Maximum Wattage at Connected Voltage

BB-#L:
- BB = Ballast Type
- #L = Number of Lamps

Example: PS-2L = (2) Lamp, Program Start Ballast

FINISH

- MW - MATTE WHITE
- BL - BLACK
- SL - SILVER
- GL - GOLD
- CL - CLEAR
- PW - PAINTED WHITE
- EA - EXTRUDED ALUMINUM
- S - STEEL
- GS - GALVANIZED STEEL
- C - CAST
- CBA - COLOR BY ARCHITECT
- SCBA - STANDARD COLOR BY ARCHITECT
- CCA - CUSTOM COLOR BY ARCHITECT
- FS 209D - MEETS FEDERAL STANDARD 209D
- TP - THERMALLY PROTECTED
- FL - FLUSH
- R - REGRESS
- M - MITERED

LENS

- #A - ACRYLIC #THICK
- #OA - ACRYLIC #THICK (OPAL)
- GC - GLASS (CLEAR)
- GO - GLASS (OPAL)
- GF - GLASS (FROSTED)
- SGL - SOFT GLOW LENS
- HPL - HIGH PERFORMANCE LENS
- DO - DROP OPAL
- CGL - CONVEX GLASS LENS
- S - SATIN LENS

OPTICS

- PRF - PERFORATED DIFFUSER
- DT - DETENTION
- BC - BLACK CONE
- BB - BLACK BAFFLE
- WB - WHITE BAFFLE
- VGL - VERTICAL GRAIN LOUVERS
- PPL - LOUVERS IN PLASTIC PROTECTOR
- WW - WALL WASH
- ESL - ELECTROSTATIC SHIELDED LENS

REFLECTOR

- OP - NONE/OPEN
- SP - SPECULAR
- SS - SEMI-SPECULAR
- D - DIFFUSE (WHITE ENAMEL)
- SC - SPECULAR (COLORED)
- PR - PRISMATIC
- FDR - FULL DEPTH REFLECTOR
- DS - DIFFUSE (SEMI SPECULAR) SILVER
- LI - LOW IRIDESCENT
- IR - IRIDESCENT
- SL - SILVER
- GL - GOLD
- CA - CLEAR ALZAK

CIE CLASSIFICATIONS

- DIR - DIRECT LIGHTING
- SD - SEMIDIRECT LIGHTING
- GEN - GENERAL DIFFUSE
- SI - SEMI-INDIRECT LIGHTING
- IND - INDIRECT LIGHTING
- ADJ - ADJUSTABLE

1. VERIFY THE PROPER MOUNTING KITS OR ACCESSORIES TO FACILITATE INSTALLATION AS SHOWN AT EACH LOCATION ON THE DRAWINGS.
2. COMPLY WITH THE "INTERIOR LIGHTING" SECTION OF THE SPECIFICATIONS.
3. REFER TO SPECIFICATIONS FOR IMPORTANT TECHNICAL REQUIREMENTS FOR LIGHTING FIXTURES, BALLASTS, AND LAMPS.
4. ALL FIXTURES SHALL BE APPROVED BY UL OR ANOTHER ACCEPTABLE TESTING LAB FOR THE PURPOSE INTENDED AND WITH THE LAMP AND BALLAST PROPOSED.

NOTES

1. PROVIDE UNIT PRICES AND FIXTURE BRAND SELECTED FOR ADD/DELETE CHANGES FOR EACH FIXTURE TYPES SHOWN WITHIN 48 BUSINESS HOURS OF THE BID DATE. FAILURE TO COMPLY WITH THIS REQUIREMENT MAY DISQUALIFY THE PRODUCTS AND EMPOWER THE ENGINEER TO DETERMINE FAIR VALUE FOR FIXTURE AND INSTALLATION CHANGES, WITHOUT FURTHER INPUT FROM THE CONTRACTOR OR INSTALLER.
2. CONTRACTOR ALLOWANCE PRICES ARE ACCURATE WHEN THIS JOB WAS SPECIFIED, CONTRACTOR AND ELECTRICAL DISTRIBUTOR SHALL VERIFY THIS ALLOWANCE AND REPORT ANY PROBLEMS TO THE ENGINEER BEFORE THE BID. ALLOWANCE PRICE MAY OR MAY NOT INCLUDE LAMP(S) OR FREIGHT AS NOTED, AND DO NOT INCLUDE ANY TAXES.

INTERIOR LIGHTING FIXTURE SCHEDULE - A **CONTRACTOR FURNISHED / CONTRACTOR INSTALLED**

	LUMINAIRE							LAMP			BALLAST					FINISH			OPTICS						MANUFACTURER (CATALOG SERIES)					
		NOMINAL SIZE											CONNECTED																	
ID	TYPE	LENGTH	WIDTH	MAX DEPTH	DIAMETER/ APERTURE	MOUNTING	OPTIONS	TYPE	LAMP COLOR	QUANTITY	CONFIGURATION	VOLTAGE	WATTS	HARMONICS (THD)	OPTIONS	HOUSING	TRIM	OTHER	CIE TYPE	FINISH	DIFFUSER	REFLECTOR	LUMINAIRE LUMENS	OPTIONS	OPTION 1	OPTION 2	OPTION 3	OPTION 4	OPTION 5	OPTION 6
(DX-1)	6" RECESSED LED DOWNLIGHT, CLEAR REFLECTOR, WHITE TRIM, FROSTED LENS, 0-10V DIMMING	-	-	8"	6"	C,R	-	LED	5000K	1	0-10V DIMMING	UNV 120/277V	30	-	-	-	PW	-	DIR	-	GF	CA	1800	-	GOTHAM (EVO-50/18-6AR-MVOLT)	LIGHTOLIER (C6L20NUVBZ10V/C6L15V 20DL50KMCLWVB)	PORTFOLIO (LD6A-20-D010TE-ERM 6A20-8-50-6LM1-LI-HB26)			
(DX-1E)	6" RECESSED LED DOWNLIGHT, CLEAR REFLECTOR, WHITE TRIM, FROSTED LENS, 0-10V DIMMING, W/ INTEGRAL EM BATTERY PACK	-	-	8"	6"	C,R	EB	LED	5000K	1	0-10V DIMMING	UNV 120/277V	30	-	-	-	PW	-	DIR	-	GF	CA	1800	-	GOTHAM (EVO-50/18-6AR-MVOLT-EL)	LIGHTOLIER (C6L20NUVBZ10VEM/C6L15200DL50KMCLWVB)	PORTFOLIO (LD6A-20-D010TE-IEM BOD-ERM6A20-8-50-6L M1-LI-HB26)			
(E9-1)	SINGLE FACE LED EXIT SIGN, METAL HOUSING, UNIVERSAL MOUNT, ARROWS PER PLAN, SELF-TESTING, GREEN LETTERS ON CLEAR BACKGROUND, MUST MEET NFPA ILLUMINATION STANDARDS, CONTRACTOR TO PROVIDE MATCHING WALL MOUNTED UNITS WHERE REQUIRED, W/ INTEGRAL EM BATTERY PACK	-	-	-	-	-	UNIVERSAL	LED	GREEN	1	LED DRIVER	UNV 120/277V	2	-	-	AL	-	-	-	-	-	-	0	-	LITHONIA (LQC-X-G-ELN)	DUALITE (SE-S-G-W-E-I)	EVENLITE (CCDS-EM-G-1-WW-XX -SD)	CHLORIDE (ER55LD-3-W-G)	1	
(E9-2)	DOUBLE FACE LED EXIT SIGN, METAL HOUSING, UNIVERSAL MOUNT, ARROWS PER PLAN, SELF-TESTING, GREEN LETTERS ON CLEAR BACKGROUND, MUST MEET NFPA ILLUMINATION STANDARDS, CONTRACTOR TO PROVIDE MATCHING WALL MOUNTED UNITS WHERE REQUIRED, W/ INTEGRAL EM BATTERY PACK	-	-	-	-	-	UNIVERSAL	LED	GREEN	1	LED DRIVER	UNV 120/277V	2	-	-	AL	-	-	-	-	-	-	0	-	LITHONIA (LQC-X-G-ELN)	DUALITE (SE-D-G-W-E-I)	EVENLITE (CCDS-EM-G-2-WW-XX -SD)	CHLORIDE (ER55LD-3-W-G)		
(S-1)	4' LED STRIP LIGHT, DIFFUSE LENS, WHITE FINISH, 0-10V DIMMING	4'	4"	4"	-	C,P	-	LED	5000K	1	0-10V DIMMING	UNV 120/277V	41	-	-	PW	-	-	DIR	-	OA	-	3000	-	LITHONIA (ZL2N-L48-3000LM-MDD-MVOLT-50K-80CRI-WH)	METALUX (SNLED-LD1-30-UNV-LN-L850-CD1-U)	DAYBRITE (LFR-4-FL-SLD-37-50-U -DZT)			
(S-1E)	4' LED STRIP LIGHT, DIFFUSE LENS, WHITE FINISH, 0-10V DIMMING, W/ INTEGRAL 1400 LUMEN EM BATTERY PACK	4'	4"	4"	-	C,P	EB	LED	5000K	1	0-10V DIMMING	UNV 120/277V	41	-	-	PW	-	-	DIR	-	OA	-	3000	-	LITHONIA (ZL2N-L48-3000LM-MDD-MVOLT-50K-80CRI-WH-E L14L)	METALUX (SNLED-LD1-30-UNV-LN-EL-L850-CD1-U)	DAYBRITE (LFR-4-FL-SLD-37-50-U -DZT-EM)			
(W-4)	1' X 4' LED SURFACE MOUNT W/ WRAP AROUND ACRYLIC DIFUSE LENS, WHITE FINISH	4'	1'	4"	-	C,S	-	LED	5000K	1	0-10V DIMMING	UNV 120/277V	40	-	-	PW	-	-	DIR	-	OA	-	4000	-	LITHONIA (STL4-40L-D40-LP850)	METALUX (4WNLED-LD1-41-F-UNV-L850-CD-1-U)	DAYBRITE (OWL-4-40L-850-UNIV-DIM)			
(W-4E)	1' X 4' LED SURFACE MOUNT W/ WRAP AROUND ACRYLIC DIFUSE LENS, WHITE FINISH, W/ INTEGRAL 1400 LUMEN EM BATTERY PACK	4'	1'	4"	-	C,S	EB	LED	5000K	1	0-10V DIMMING	UNV 120/277V	40	-	-	PW	-	-	DIR	-	OA	-	4000	-	LITHONIA (STL4-40L-D40-LP850-EL 14L)	METALUX (4WNLED-LD1-41-F-UNV-L850-EL-CD-1-U	DAYBRITE (OWL-4-40L-850-UNIV-DIM-EMLED)			
(WB-10)	4' LED VANITY WALL BRACKET, WHITE FINISH, 0-10V DIMMING	4'	5"	4"	-	W,S	-	LED	5000K	1	0-10V DIMMING	UNV 120/277V	28	-	-	PW	-	-	DIR	-	OA	-	3000	-	LITHONIA (WL4-30L-EZ1-LP850)	DAYBRITE (CSW48-28-50K-U-DZT-2-O)	MERCURY (L23-4-37-50K-ASW-SW -SXX-UNI)			
(WB-10E)	4' LED WALL BRACKET STAIR WAY LINEAR, WHITE FINISH, 0-10V DIMMING, W/ INTEGRAL 1400 LUMEN EM BATTERY PACK	4'	5"	4"	-	W,S	EB	LED	5000K	1	0-10V DIMMING	UNV 120/277V	28	-	-	PW	-	-	DIR	-	OA	-	3000	-	LITHONIA (WL4-30L-EZ1-LP850-EL1 4L)	DAYBRITE (CSW48-28-50K-U-DZT-2-O-EM)	MERCURY (L23-4-37-50K-ASW-SW -SXX-UNI-EM12)			

INTERIOR LIGHTING FIXTURE SCHEDULE - B **OWNER FURNISHED / CONTRACTOR INSTALLED**

	LUMINAIRE							LAMP			BALLAST					FINISH			OPTICS						MANUFACTURER (CATALOG SERIES)					
		NOMINAL SIZE											CONNECTED																	
ID	TYPE	LENGTH	WIDTH	MAX DEPTH	DIAMETER/ APERTURE	MOUNTING	OPTIONS	TYPE	LAMP COLOR	QUANTITY	CONFIGURATION	VOLTAGE	WATTS	HARMONICS (THD)	OPTIONS	HOUSING	TRIM	OTHER	CIE TYPE	FINISH	DIFFUSER	REFLECTOR	LUMINAIRE LUMENS	OPTIONS	OPTION 1	OPTION 2	OPTION 3	OPTION 4	OPTION 5	OPTION 6
(G-2)	2' X 4' RECESSED LED BASIC TROFFER, LAY-IN GRID CEILING, BACK OF HOUSE SPACES, WHITE TRIM, 0-10V DIMMING	4'	2'	5"	-	C,G	EB	LED	5000K	1	0-10V DIMMING	UNV 120/277V	40	-	-	PW	PW	-	DIR	-	A,S	-	4000	-	LITHONIA (2FLS4-40L-EZ1-LP850)					
(G-3)	2' X 2' RECESSED LED AESTHETIC TROFFER, LAY-IN GRID CELING, WHITE TRIM, 0-10V DIMMING	2'	2'	5"	-	C,G	EB	LED	5000K	1	0-10V DIMMING	UNV 120/277V	20	-	-	PW	PW	-	DIR	-	A,S	-	2000	-	LITHONIA (2VTL2-20L-ADP-EZ1-LP850)					
(G-3E)	2' X 2' RECESSED LED VOLUMETRIC TROFFER, LAY-IN GRID CELING, WHITE TRIM, 0-10V DIMMING, W/ INTEGRAL 1400 LUMEN EM BATTERY PACK	2'	2'	5"	-	C,G	EB	LED	5000K	1	0-10V DIMMING	UNV 120/277V	20	-	-	PW	PW	-	DIR	-	A,S	-	2000	-	LITHONIA (2VTL2-20L-ADP-EZ1-LP850-EL14L)					
(G-4)	2' X 4' RECESSED LED AESTHETIC TROFFER, LAY-IN GRID CELING, WHITE TRIM, 0-10V DIMMING	4'	2'	5"	-	C,G	EB	LED	5000K	1	0-10V DIMMING	UNV 120/277V	40	-	-	PW	PW	-	DIR	-	A,S	-	4000	-	LITHONIA (2VTL4-40L-ADP-EZ1-LP850)					
(G-4E)	2' X 4' RECESSED LED VOLUMETRIC TROFFER, LAY-IN GRID CELING, WHITE TRIM, 0-10V DIMMING, W/ INTEGRAL 1400 LUMEN EM BATTERY PACK	4'	2'	5"	-	C,G	EB	LED	5000K	1	0-10V DIMMING	UNV 120/277V	40	-	-	PW	PW	-	DIR	-	A,S	-	4000	-	LITHONIA (2VTL4-40L-ADP-EZ1-LP850-EL14L)					
(GF-3E)	2' X 2' RECESSED LED AESTHETIC TROFFER, LAY-IN FIXTURE W/ PROVIDED FLANGE KIT, WHITE TRIM, 0-10V DIMMING, W/ INTEGRAL 1400 LUMEN EM BATTERY PACK	2'	2'	5"	-	C,G	EB, FLANGE KIT	LED	5000K	1	0-10V DIMMING	UNV 120/277V	20	-	-	PW	PW	-	DIR	-	A,S	-	2000	-	LITHONIA (2VTL2-20L-ADP-EZ1-LP850-EL14L-FLANGE KIT)					

GSBS ARCHITECTS
375 WEST 200 SOUTH
SALT LAKE CITY, UT 84101
P 801.521.8600
F 801.521.7913
www.gsbsarchitects.com

REVISIONS:

1	3/27/2015	ADDENDUM #1

SPECTRUM ENGINEERS
324 S. State St., Suite 400
Salt Lake City, UT 84111
800-678-7077
801-328-5151
fax: 801-328-5155
www.spectrum-engineers.com

LICENSED PROFESSIONAL ENGINEER
No. 181563
DAVID E. WESEMANN
03.09.15
STATE OF UTAH

WSU DAVIS CAMPUS D13 REMODEL

875 SOUTH UNIVERSITY PARK BLVD.
CLEARFIELD, UT 84041

DFCM

4110 STATE OFFICE
BUILDING 450 NORTH
STATE STREET SALT
LAKE CITY, UT 84114

OWNER PROJECT NO.:	14297810
GSBS PROJECT NO.:	2014.095.00
ISSUED DATE:	03/09/2015

INTERIOR LIGHTING FIXTURE SCHEDULE

EL601

C:\Users\jpm\Documents\2014095BZElec CentralLjpm.rvt
3/26/2015 10:51:29 AM

COM*check* Software Version 3.9.4

Mechanical Compliance Certificate

90.1 (2010) Standard

Section 1: Project Information

Project Type: **Alteration**
Project Title : WSU Davis Campus D13 Remodel

Construction Site:
875 South University Park BLVD
Clearfield, UT 84041

Owner/Agent:
Clio Rayner
GSBS
375 West 200 South
Salt Lake City, UT 84101
801-521-8600

Designer/Contractor:
Ali Thamer
Colvin Engineering Associates
244 West 300 North
84103
801-322-2400

Section 2: General Information

Building Location (for weather data): **Ogden, Utah**
Climate Zone: **5b**

Section 3: Mechanical Systems List

Quantity **System Type & Description**

6 HP-1 Thru 6:
VRF, Air Cooled Heat Pump
Heating Mode: Capacity = 215 kBtu/h,
Proposed Efficiency = 3.32 COP, Required Efficiency = 3.20 COP
Cooling Mode: Capacity = 192 kBtu/h , No Economizer , Economizer exception: Humidity Requirements
Proposed Efficiency = 11.10 EER, Required Efficiency = 10.60 EER
Fan System: FAN SYSTEM 1 | Building -- Compliance (Brake HP method) : Passes

Fans:
FAN 1 Supply, Multi-Zone VAV, 12000 CFM, 15.0 motor nameplate hp, 12.0 brake hp
FAN 2 Exhaust, Multi-Zone VAV, 12000 CFM, 15.0 motor nameplate hp, 12.0 brake hp
FAN 3 Exhaust, Constant Volume, 830 CFM, 0.5 motor nameplate hp, 0.5 brake hp
Pressure Drop Credits:
Return and/or exhaust airflow control devices, 1.4524 credit
Particulate filtration credit: MERV 9 through 12, 1.4524 credit
Fully ducted return and/or exhaust air systems, 1.4524 credit
Fully ducted return and/or exhaust air systems in laboratories or vivarium systems, 2.2432 credit
Heat recovery device, 2.5853 credit

SYSTEM COMPLIANCE REQUIRED.

3 HPWH-1 Thru 3:
Electric Storage Water Heater, Capacity: 50 gallons w/ Circulation Pump
Proposed Efficiency: 90.00 EF, Required Efficiency: 0.86 EF

SWH COMPLIANCE REQUIRED.

Section 5: Compliance Statement

Compliance Statement: The proposed mechanical alteration project represented in this document is consistent with the building plans, specifications and other calculations submitted with this permit application. The proposed mechanical alteration project has been designed to meet the 90.1 (2010) Standard, Chapter 8, requirements in COM*check* Version 3.9.4 and to comply with the mandatory requirements in the Requirements Checklist.

BRET R CHRISTIANSEN 3/27/15
PROJECT MANAGER

Project Title: WSU Davis Campus D13 Remodel Report date: 03/27/15
Data filename: I:\PROJECTS\2014 Projects\2014-114.00 WSU Davis Campus Building D 13\Energy\Energy

Name - Title Signature Date

Section 6: Post Construction Compliance Statement

- ☐ HVAC record drawings of the actual installation and performance data for each equipment provided to the owner within 90 days after system acceptance.
- ☐ HVAC O&M documents for all mechanical equipment and system provided to the owner within 90 days after system acceptance.
- ☐ Written HVAC balancing report provided to the owner.

The above post construction requirements have been completed.

Principal Mechanical Designer-Name Signature Date

COM*check* Software Version 3.9.4

Inspection Checklist

Energy Code: 90.1 (2010) Standard

Requirements: 90.0% were addressed directly in the COM*check* software
Text in the "Comments/Assumptions" column is provided by the user in the COMcheck Requirements screen. For each requirement, the user certifies that a code requirement will be met and how that is documented, or that an exception is being claimed. Where compliance is itemized in a separate table, a reference to that table is provided.

90.1 (2010) Standard	Plan Review	Complies?	Comments/Assumptions
4.2.2.6.4, 4.2.1.6.7, 2 [PR2][1]	Plans, specifications, and/or calculations provide all information with which compliance can be determined for the mechanical systems and equipment and document where exceptions to the standard are claimed. Load calculations per acceptable engineering standards and handbooks.	☐Complies ☐Does Not ☐Not Observable ☐Not Applicable	Requirement will be met.

90.1 (2010) Standard	Footing / Foundation Inspection	Complies?	Comments/Assumptions
6.4.3.8 [FO9][1]	Freeze protection and snowlice melting system sensors for future connection to controls.	☐Complies ☐Does Not ☐Not Observable ☐Not Applicable	**Exception:** Requirement does not apply.

Additional Comments/Assumptions:

90.1 (2010) Standard	Plumbing Rough-In Inspection	Complies?	Comments/Assumptions
7.4.4.1 [PL2][1]	Temperature controls installed on service water heating systems (<=120°F to maximum temperature for intended use).	☐Complies ☐Does Not ☐Not Observable ☐Not Applicable	Requirement will be met. **Location on plans/spec:** PL501 *See the Mechanical Systems list for values for Water Heater 2.*
7.4.4.2 [PL3][1]	Automatic time switches installed to automatically switch off the recirculating hot-water system or heat trace.	☐Complies ☐Does Not ☐Not Observable ☐Not Applicable	Requirement will be met. **Location on plans/spec:** PL501 *See the Mechanical Systems list for values for Water Heater 2.*

Additional Comments/Assumptions:

Section # & Req.ID	Mechanical Rough-In Inspection	Plans Verified Value	Field Verified Value	Complies?	Comments/Assumptions
6.4.1.4.6, 4.1.5 [ME1][1]	HVAC equipment efficiency verified. Non-NAFCA HVAC equipment labeled as meeting 90.1.	Efficiency:____	Efficiency:____	☐Complies ☐Does Not ☐Not Observable ☐Not Applicable	*See the Mechanical Systems list for values.*
6.4.3.4.1 [ME3][1]	Stair and elevator shaft vents have motorized dampers that automatically close.			☐Complies ☐Does Not ☐Not Observable ☐Not Applicable	**Exception:** Requirement does not apply.
6.4.3.4.2, 6.4.3.4.3 [ME4][1]	Outdoor air and exhaust systems have motorized dampers that automatically shut when not in use and meet maximum leakage rates. Check gravity dampers where allowed.			☐Complies ☐Does Not ☐Not Observable ☐Not Applicable	Requirement will be met. **Location on plans/spec:** MH602, MH702, MH703
6.4.3.4.5 [ME39][1]	Enclosed parking garage ventilation has automatic contaminant detection and capacity to stage or modulate fans to 50% or less of design capacity.			☐Complies ☐Does Not ☐Not Observable ☐Not Applicable	**Exception:** Requirement does not apply.
6.4.3.4.4 [ME5][1]	Ventilation fans >0.75 hp have automatic controls to shut off fan when not required.			☐Complies ☐Does Not ☐Not Observable ☐Not Applicable	Requirement will be met. **Location on plans/spec:** MH602, MH702, MH703
6.4.3.9 [ME6][1]	Demand control ventilation provided for spaces >500 ft2 and >40 people/1000 ft2 occupant density and served by systems with air side economizer, auto modulating outside air damper control, or design airflow >3,000 cfm.			☐Complies ☐Does Not ☐Not Observable ☐Not Applicable	Requirement will be met. **Location on plans/spec:** MH101, MH102
6.4.4.1.1 [ME7][1]	Insulation exposed to weather protected from damage. Insulation outside of the conditioned space and associated with cooling systems is vapor retardant.			☐Complies ☐Does Not ☐Not Observable ☐Not Applicable	Requirement will be met. **Location on plans/spec:** Spec Section 230700
6.4.4.1.2 [ME8][1]	HVAC ducts and plenums insulated. Where ducts or plenums are installed in or under a slab, verification may need to occur during Foundation **Inspection**.	R-____	R-____	☐Complies ☐Does Not ☐Not Observable ☐Not Applicable	Requirement will be met. **Location on plans/spec:** SPec Section 230700
6.4.4.1.3 [ME9][1]	HVAC piping insulation thickness. Where piping is installed in or under a slab, verification may need to occur during Foundation Inspection.	____in,	____in,	☐Complies ☐Does Not ☐Not Observable ☐Not Applicable	Requirement will be met. **Location on plans/spec:** 230700
6.4.4.1.4 [ME41][1]	Thermally ineffective panel surfaces of sensible heating panels have insulation >= R-3.5.			☐Complies ☐Does Not ☐Not Observable ☐Not Applicable	**Exception:** Requirement does not apply.
6.4.4.2.1 [ME10][1]	Ducts and plenums sealed based on static pressure and location.			☐Complies ☐Does Not ☐Not Observable ☐Not Applicable	Requirement will be met. **Location on plans/spec:** 233300

1 High Impact (Tier 1)	2 Medium Impact (Tier 2)	3 Low Impact (Tier 3)

Section # & Req.ID	Mechanical Rough-In Inspection	Plans Verified Value	Field Verified Value	Complies?	Comments/Assumptions
6.5.1.6.5, 1.1.6.5.1, 3 [ME12][1]	Air economizers provided where required, meet the requirements for design capacity, control signal, ventilation controls, high-limit shut-off, integrated economizer control, and provide a means to relieve excess outside air during operation.			☐Complies ☐Does Not ☐Not Observable ☐Not Applicable	*See the Mechanical Systems list for values for HVAC System 1.*
6.5.2.3 [ME19][1]	Dehumidification controls provided to prevent reheating, recooling, mixing of hot and cold airstreams or concurrent heating and cooling of the same airstream.			☐Complies ☐Does Not ☐Not Observable ☐Not Applicable	Requirement will be met. **Location on plans/spec:** MH601
6.5.3.1.1 [ME52][1]	HVAC fan systems at design conditions do not exceed allowable fan system motor nameplate hp or fan system bhp.			☐Complies ☐Does Not ☐Not Observable ☐Not Applicable	**Exception:** Hospital and laboratory systems that utilize flow control devices on exhaust and/or return. **Location on plans/spec:** MH702 *See the Mechanical Systems list for values for HVAC System 1.*
6.5.3.1.2 [ME21][1]	HVAC fan motors not larger than allowable limits.	bhp:____	bhp:____	☐Complies ☐Does Not ☐Not Observable ☐Not Applicable	Requirement will be met. **Location on plans/spec:** MH601, MH602 *See the Mechanical Systems list for values for HVAC **System 1**.*
6.5.3.2.1 [ME22][1]	VAV fan motors >=10 hp to be driven by variable speed drive, have a vane-axial fan with variable pitch blades, or have controls to limit fan motor demand.	☐ VSD ☐ Vane axial fan ☐ Other	☐ VSD ☐ Vane axial fan ☐ Other	☐Complies ☐Does Not ☐Not Observable ☐Not Applicable	Requirement will be met. **Location on plans/spec:** MH602 *See the Mechanical Systems list for values for HVAC System 1.*
6.5.3.2.2 [ME23][1]	VAV fans have static pressure sensors positioned so setpoint <=1/3 total design pressure.			☐Complies ☐Does Not ☐Not Observable ☐Not Applicable	**Exception:** Systems with DDC of individual zone boxes reporting to the central control panel and reset of static pressure setpoint based on the zone requiring the most pressure. **Location on plans/spec:** MH702, MH703 *See the Mechanical Systems list for values for HVAC System 1.*
6.5.3.2.3 [ME24][1]	Reset static pressure setpoint for DDC controlled VAV boxes reporting to central controller based on the zones requiring the most pressure.			☐Complies ☐Does Not ☐Not Observable ☐Not Applicable	Requirement will be met. **Location on plans/spec:** MH702, MH703 *See the Mechanical Systems list for values for HVAC **System 1**.*
6.5.3.3 [ME42][1]	Multiple zone VAV systems with DDC of individual zone boxes have static pressure setpoint reset controls.			☐Complies ☐Does Not ☐Not Observable ☐Not Applicable	Requirement will be met. **Location on plans/spec:** MH702, MH703 *See the Mechanical Systems list for values for HVAC System 1.*

1 High Impact (Tier 1)	2 Medium Impact (Tier 2)	3 Low Impact (Tier 3)

Section # & Req.ID	Mechanical Rough-In Inspection	Plans Verified Value	Field Verified Value	Complies?	Comments/Assumptions
6.5.3.4 [ME43][1]	Multiple zone HVAC systems have supply air temperature reset controls.			☐Complies ☐Does Not ☐Not Observable ☐Not Applicable	**Exception:** Requirement does not apply. *See the Mechanical Systems list for values for HVAC System 1.*
6.5.4.1 [ME25][1]	HVAC pumping systems >10 hp designed for variable fluid flow.			☐Complies ☐Does Not ☐Not Observable ☐Not Applicable	Requirement will be met.
6.5.6.1 [ME56][1]	Exhaust air energy recovery on systems meeting Table 6.5.6.1.			☐Complies ☐Does Not ☐Not Observable ☐Not Applicable	Requirement will be met. **Location on plans/spec:** MH602
6.5.7.1.1 [ME32][1]	Kitchen hoods >5,000 cfm have make up air >=50% of exhaust air volume.			☐Complies ☐Does Not ☐Not Observable ☐Not Applicable	**Exception:** Requirement does not apply.
6.5.7.1.2 [ME46][1]	Conditioned supply air to space with a kitchen hood shall not exceed the greater of a) supply flow required to meet space heating or cooling, or b) hood exhaust flow minus the available air transfer from available spaces.			☐Complies ☐Does Not ☐Not Observable ☐Not Applicable	**Exception:** Requirement does not apply. *See the Mechanical Systems list for values for HVAC System 1.*
6.5.7.1.3 [ME47][1]	Kitchen hoods with a total exhaust airflow rate >5000 cfm meet replacement air, ventilation system, or energy recovery requirements shown in Table 6.5.7.1.3.			☐Complies ☐Does Not ☐Not Observable ☐Not Applicable	**Exception:** Requirement does not apply. *See the Mechanical Systems list for values for HVAC System 1.*
6.5.7.1.4 [ME48][1]	Kitchen hoods with a total exhaust airflow rate >5000 cfm meet replacement air, ventilation system, or energy recovery requirements.			☐Complies ☐Does Not ☐Not Observable ☐Not Applicable	**Exception:** Requirement does not apply. *See the Mechanical Systems list for values for HVAC System 1.*
6.5.7.1.5 [ME49][1]	Approved field test used to evaluate design air flow rates and demonstrate proper capture and containment of kitchen exhaust systems.			☐Complies ☐Does Not ☐Not Observable ☐Not Applicable	**Exception:** Requirement does not apply.
6.5.7.2 [ME33][1]	Fume hoods exhaust systems >=15,000 cfm have VAV hood exhaust and supply systems, direct make-up air or heat recovery.			☐Complies ☐Does Not ☐Not Observable ☐Not Applicable	**Exception:** Requirement does not apply.
6.5.8.1 [ME34][1]	Unenclosed spaces that are heated use only radiant heat.			☐Complies ☐Does Not ☐Not Observable ☐Not Applicable	**Exception:** Requirement does not apply.
7.4.2 [ME36][1]	Service water heating equipment meets efficiency requirements.			☐Complies ☐Does Not ☐Not Observable ☐Not Applicable	*See the Mechanical Systems list for values for Water Heater 2.*

Additional Comments/Assumptions:

1 High Impact (Tier 1)	2 Medium Impact (Tier 2)	3 Low Impact (Tier 3)

90.1 (2010) Standard	Rough-In Electrical Inspection	Complies?	Comments/Assumptions
8.4.2 [EL10][1]	At least 50% of all 125 volt 15- and 20-Amp receptacles are controlled by an automatic control device.	☐Complies ☐Does Not ☐Not Observable ☐Not Applicable	
10.4.1 [EL9][1]	Electric motors meet requirements where applicable.	☐Complies ☐Does Not ☐Not Observable ☐Not Applicable	Requirement will be met. **Location on plans/spec:** MH601, MH602

Additional Comments/Assumptions:

90.1 (2010) Standard	Final Inspection	Complies?	Comments/Assumptions
6.4.3.1.1 [FI2][1]	Heating and cooling to each zone is controlled by a thermostat control.	☐Complies ☐Does Not ☐Not Observable ☐Not Applicable	Requirement will be met. **Location on plans/spec:** MH101, MH102 *See the Mechanical Systems list for values for HP-1 Thru 6.*
6.4.3.1.2 [FI3][1]	Thermostatic controls have a 5 °F deadband.	☐Complies ☐Does Not ☐Not Observable ☐Not Applicable	Requirement will be met. **Location on plans/spec:** Spec Section 230900
6.4.3.2 [FI20][1]	Temperature controls have setpoint overlap restrictions.	☐Complies ☐Does Not ☐Not Observable ☐Not Applicable	Requirement will be met. **Location on plans/spec:** Spec Section 230900
6.4.3.3.1 [FI21][1]	HVAC systems equipped with at least one automatic shutdown control.	☐Complies ☐Does Not ☐Not Observable ☐Not Applicable	Requirement will be met. **Location on plans/spec:** Spec SEction 230900
6.4.3.3.2 [FI22][1]	Setback controls allow automatic restart and temporary operation as required for maintenance.	☐Complies ☐Does Not ☐Not Observable ☐Not Applicable	Requirement will be met. **Location on plans/spec:** Spec Section 230900
6.4.3.3.3 [FI4][1]	Systems with air capacity >10,000 cfm include optimum start controls.	☐Complies ☐Does Not ☐Not Observable ☐Not Applicable	Requirement will be met. **Location on plans/spec:** Spec Section 230900, MH702, MH703 *See the Mechanical Systems list for values for HP-1 Thru 6.*
6.4.3.3.4 [FI23][1]	Zone isolation devices and controls.	☐Complies ☐Does Not ☐Not Observable ☐Not Applicable	Requirement will be met. **Location on plans/spec:** MH101, MH102 *See the Mechanical Systems list for values for HP-1 Thru 6.*
6.4.3.5 [FI5][1]	Heat pump controls prevent supplemental electric resistance heat from coming on when not needed.	☐Complies ☐Does Not ☐Not Observable ☐Not Applicable	Requirement will be met. **Location on plans/spec:** MH601 *See the Mechanical Systems list for values for HP-1 Thru 6.*
6.4.3.7 [FI6][1]	When humidification and dehumidification are provided to a zone, simultaneous operation is prohibited.	☐Complies ☐Does Not ☐Not Observable ☐Not Applicable	Requirement will be met. **Location on plans/spec:** MH702, MH703
6.7.2.1 [FI7][1]	Furnished HVAC as-built drawings submitted within 90 days of system acceptance.	☐Complies ☐Does Not ☐Not Observable ☐Not Applicable	**Location on plans/spec:** MH601
6.7.2.2 [FI8][1]	Furnished O&M manuals for HVAC systems within 90 days of system accoptance.	☐Complies ☐Does Not ☐Not Observable ☐Not Applicable	
6.7.2.3 [FI9][1]	An air and/or hydronic system balancing report is provided for HVAC systems serving zones >5,000 ft2 of conditioned area.	☐Complies ☐Does Not ☐Not Observable ☐Not Applicable	
6.7.2.4 [FI10][1]	HVAC control systems have been tested to ensure proper operation, calibration and adjustment of controls.	☐Complies ☐Does Not ☐Not Observable ☐Not Applicable	Requirement will be met. **Location on plans/spec:** Spec Section 230900

1 High Impact (Tier 1)	2 Medium Impact (Tier 2)	3 Low Impact (Tier 3)

90.1 (2010) Standard	Final Inspection	Complies?	Comments/Assumptions
7.4.4.3 [FI11][1]	Public lavatory faucet water temperature <=110°F.	☐Complies ☐Does Not ☐Not Observable ☐Not Applicable	Requirement will be met. **Location on plans/spec:** PL601 *See the Mechanical **Systems** list for values for HPWH-1 Thru 3.*
7.4.4.4 [FI12][1]	Controls are installed that limit the operation of a recirculation pump installed to maintain temperature of a storage tank.	☐Complies ☐Does Not ☐Not Observable ☐Not Applicable	Requirement will be met. **Location on plans/spec:** PL-501 *See the Mechanical Systems list for values for HPWH-1 Thru 3.*
10.4.3 [FI24][1]	Elevators are designed with the proper lighting, ventilation power, and standby mode.	☐Complies ☐Does Not ☐Not Observable ☐Not Applicable	**Exception:** Requirement does not apply.

Additional Comments/Assumptions:

1 High Impact (Tier 1)	2 Medium Impact (Tier 2)	3 Low Impact (Tier 3)

GSBS ARCHITECTS

375 WEST 200 SOUTH
SALT LAKE CITY, UT 84101

P 801.521.8600
F 801.521.7913

www.gsbsarchitects.com

REVISIONS:

WSU DAVIS CAMPUS D13 REMODEL

875 SOUTH UNIVERSITY PARK BLVD.
CLEARFIELD, UT 84041

DFCM

4110 STATE OFFICE BUILDING 450 NORTH STATE STREET SALT LAKE CITY, UT 84114

OWNER PROJECT NO.:	14297810
GSBS PROJECT NO.:	2014.095.00
ISSUED DATE:	03/09/2015

COMCHECK

M002

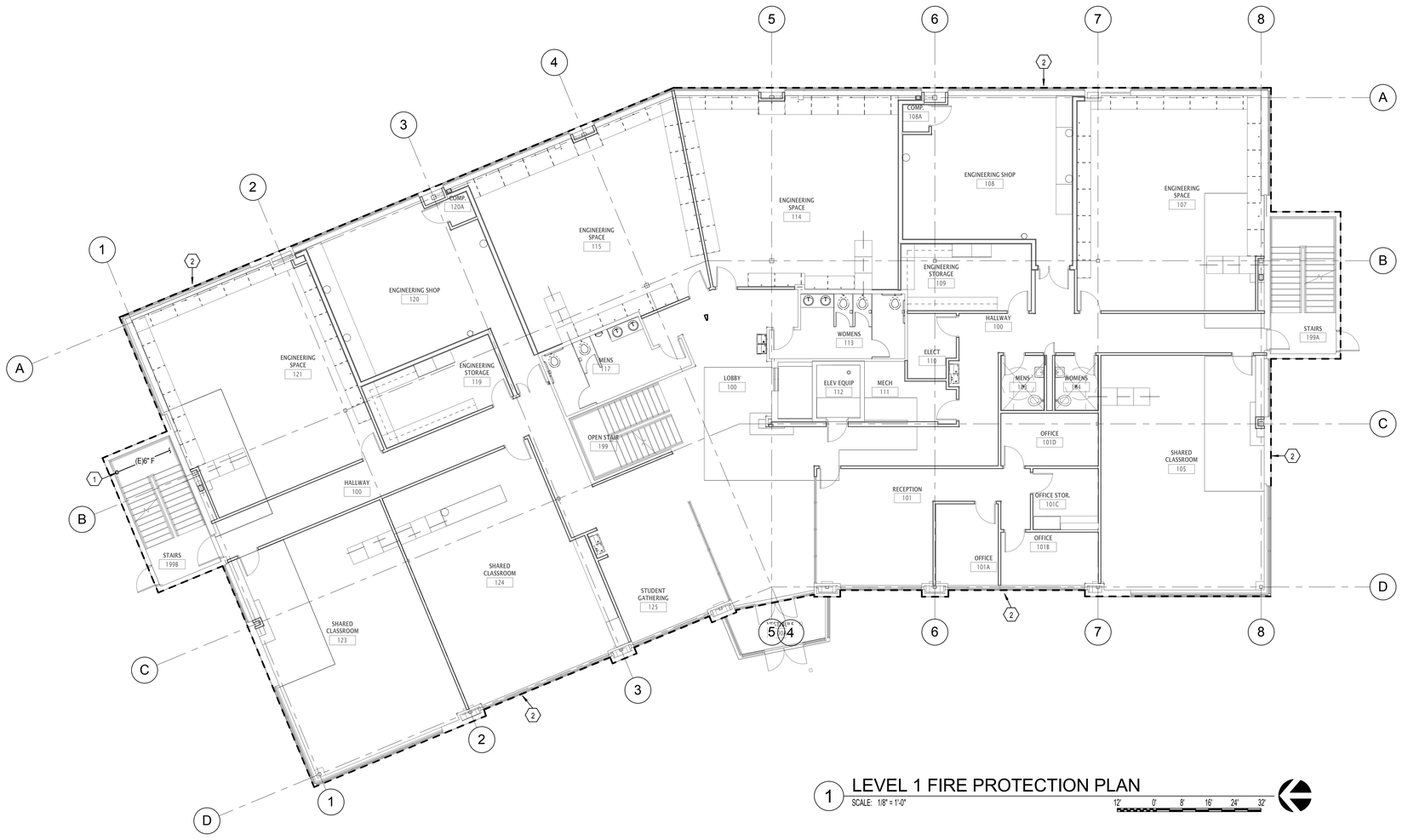

1 LEVEL 1 FIRE PROTECTION PLAN

SCALE: 1/8" = 1'-0"

12' 0' 8' 16' 24' 32'

KEYED NOTES

1 EXISTING TO REMAIN.

2 MODIFY EXISTING FIRE SPRINKLER SYSTEM TO ACCOMMODATE NEW FLOOR PLAN.

GENERAL NOTES

A. AUTOMATIC FIRE SPRINKLER SYSTEM SHALL BE HYDRAULICALLY CALCULATED IN ACCORDANCE WITH NFPA #13, 2012 EDITION.

B. AUTOMATIC FIRE SPRINKLER SYSTEM SHALL BE INSTALLED IN ACCORDANCE WITH NFPA#13, 2012 EDITION, INSTALLATION OF SPRINKLER SYSTEMS.

C. FURNISH AND INSTALL NEW PIPE, FITTINGS, SPRINKLER HEADS AS REQUIRED TO COMPLETE THE WORK. ALL MATERIALS TO MATCH EXISTING.

D. NEW SPRINKLER HEADS TO MATCH CEILING TYPE. COORDINATE WITH ARCHITECTURAL SHEETS.

E. ALL PIPING SHALL BE DOMESTIC.

F. FITTINGS SHALL BE THREADED, WELDED AND GROOVED IN ACCORDANCE WITH LISTING AND NFPA #13 REQUIREMENTS.

G. SEISMIC BRACING AND FLEXIBLE COUPLINGS SHALL BE PROVIDED AS REQUIRED FOR SEISMIC PROTECTION.

H. PLAIN END OR MECHANICAL TEES SHALL NOT BE USED, UNLESS REQUIRED FOR FIELD MODIFICATION OF PIPING SYSTEM.

I. THE SPRINKLER CONTRACTOR SHALL COORDINATE WITH OTHER TRADES AND PROVIDE ADDITIONAL OFFSETS AS REQUIRED FOR INSTALLATION. SPRINKLER PIPING SHALL BE REROUTED AS REQUIRED WHERE CONFLICTS OCCUR. SPRINKLER CONTRACTOR'S PRICING SHALL INCLUDE ANY PIPING OFFSETS, OR REVISED CUT LENGTHS.

J. TIGHT CEILING SPACE WILL REQUIRE SOME SPRINKLER LINES TO OFFSET OVER OR UNDER DUCTWORK, PIPE, OR OTHER OBSTACLES. PROVIDE DRAINS AS REQUIRED.

K. SHOP DRAWINGS SHALL BE PROVIDED BY THE SPRINKLER CONTRACTOR USING AN REVIT COMPATIBLE FORMAT. SUBMIT TO OWNERS INSURANCE REVIEW CONSULTANT AND ARCHITECT AND ENGINEER. AS-BUILT DRAWINGS AND ELECTRONIC DRAWING FILES SHALL BE PROVIDED AT END OF PROJECT BY CONTRACTOR.

L. FIRE SPRINKLER SHOP DRAWINGS, CALCULATIONS AND MATERIALS SHALL BE SUBMITTED AND REVIEWED BY ENGINEER PRIOR TO SUBMITTING TO OTHER AUTHORITIES HAVING JURISDICTION.

M. FIRE SPRINKLER CONTRACTOR TO ACQUIRE ALL NECESSARY PERMITS AND/OR APPROVALS FROM CITY, COUNTY, AND STATE.

N. PRESSURE TEST AND CERTIFY SPRINKLER SYSTEM.

O. PIPE ROUTING, ELEVATIONS, SPRINKLER LOCATIONS, ARE SCHEMATIC, AND SHALL BE USED AS REFERENCE ONLY. INSTALLER SHALL FIELD VERIFY CONDITIONS, AND PROVIDE OFFSETS AS REQUIRED FOR INSTALLATION. DEVIATION FROM SCHEMATIC PLAN SHALL BE APPROVED IN WRITING BY THE ENGINEER, PRIOR TO INSTALLATION.

P. NEW FIRE PROTECTION WORK TO INCLUDE HEADS AND PIPING SYSTEM AS REQUIRED TO MEET NFPA REQUIREMENTS.

Q. NEW PIPING TO BE SCHEDULE 40 STEEL PIPE LISTED FOR FIRE PROTECTION.

R. SEE ARCHITECTURAL PLANS FOR CEILING HEIGHTS.

S. SUBMIT FIRE PROTECTION DRAWINGS TO LANDLORD'S/OWNER'S INSURANCE REVIEW CONSULTANT.

T. COORDINATE WITH AHJ FOR SYSTEM DESIGN REQUIREMENTS.

U. COORDINATE PIPE ROUTING WITH OTHER TRADES.

GSBS ARCHITECTS

375 WEST 200 SOUTH
SALT LAKE CITY, UT 84101

P 801.521.8600
F 801.521.7913

www.gsbsarchitects.com

REVISIONS:

1	03-27-2015	ADDENDUM #1

WSU DAVIS CAMPUS D13 REMODEL

875 SOUTH UNIVERSITY PARK BLVD.
CLEARFIELD, UT 84041

DFCM

4110 STATE OFFICE
BUILDING 450 NORTH
STATE STREET SALT
LAKE CITY, UT 84114

OWNER PROJECT NO.:	14297810
GSBS PROJECT NO.:	2014.095.00
ISSUED DATE:	03/09/2015

LEVEL 1 FIRE PROTECTION PLAN

FP101

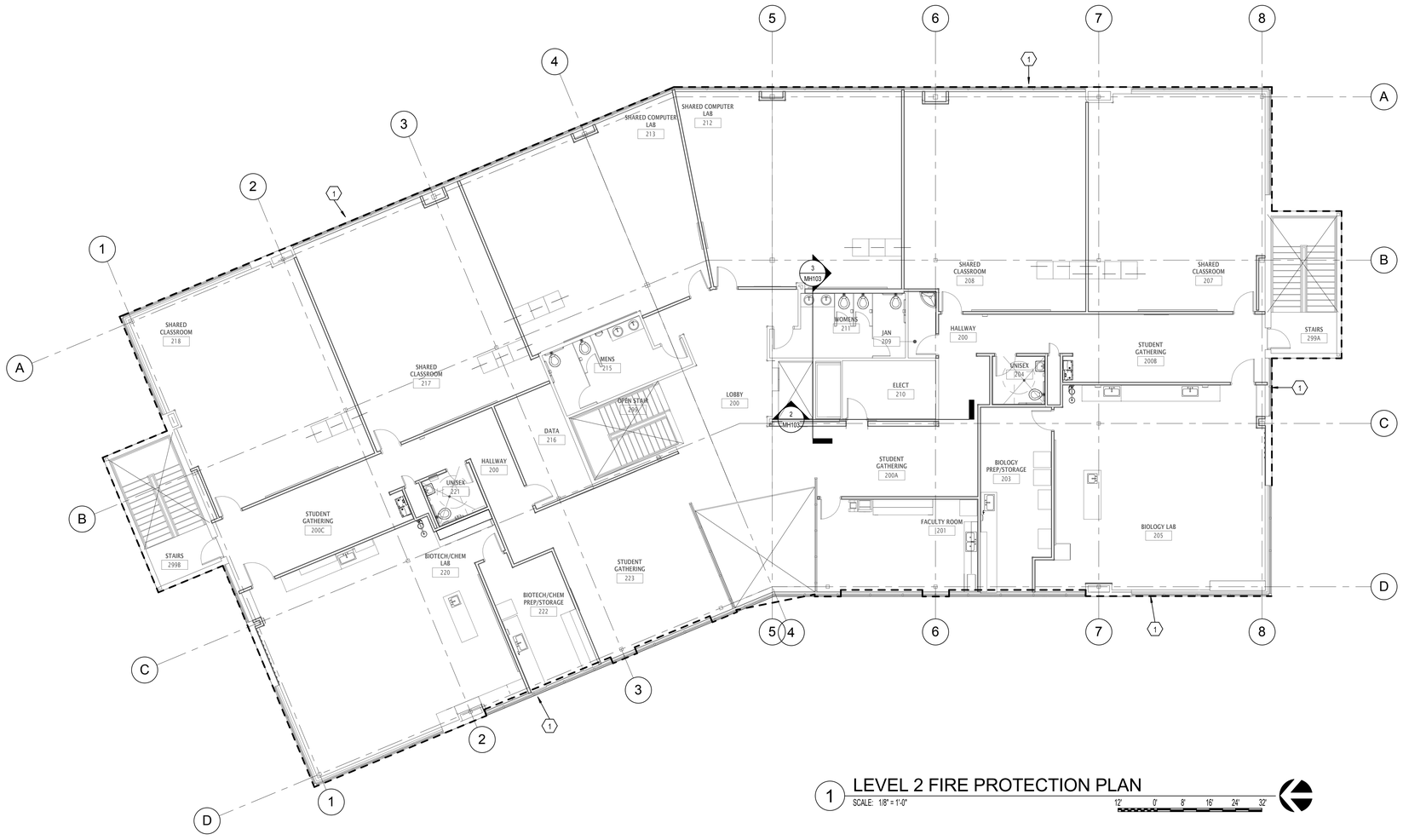

1 LEVEL 2 FIRE PROTECTION PLAN

SCALE: 1/8" = 1'-0"

12' 0' 8' 16' 24' 32'

KEYED NOTES

1 MODIFY EXISTING FIRE SPRINKLER SYSTEM TO ACCOMMODATE NEW FLOOR PLAN.

GENERAL NOTES

A. AUTOMATIC FIRE SPRINKLER SYSTEM SHALL BE HYDRAULICALLY CALCULATED IN ACCORDANCE WITH NFPA #13, 2012 EDITION.

B. AUTOMATIC FIRE SPRINKLER SYSTEM SHALL BE INSTALLED IN ACCORDANCE WITH NFPA#13, 2012 EDITION, INSTALLATION OF SPRINKLER SYSTEMS.

C. FURNISH AND INSTALL NEW PIPE, FITTINGS, SPRINKLER HEADS AS REQUIRED TO COMPLETE THE WORK. ALL MATERIALS TO MATCH EXISTING.

D. NEW SPRINKLER HEADS TO MATCH CEILING TYPE. COORDINATE WITH ARCHITECTURAL SHEETS.

E. ALL PIPING SHALL BE DOMESTIC.

F. FITTINGS SHALL BE THREADED, WELDED AND GROOVED IN ACCORDANCE WITH LISTING AND NFPA #13 REQUIREMENTS.

G. SEISMIC BRACING AND FLEXIBLE COUPLINGS SHALL BE PROVIDED AS REQUIRED FOR SEISMIC PROTECTION.

H. PLAIN END OR MECHANICAL TEES SHALL NOT BE USED, UNLESS REQUIRED FOR FIELD MODIFICATION OF PIPING SYSTEM.

I. THE SPRINKLER CONTRACTOR SHALL COORDINATE WITH OTHER TRADES AND PROVIDE ADDITIONAL OFFSETS AS REQUIRED FOR INSTALLATION. SPRINKLER PIPING SHALL BE REROUTED AS REQUIRED WHERE CONFLICTS OCCUR. SPRINKLER CONTRACTOR'S PRICING SHALL INCLUDE ANY PIPING OFFSETS, OR REVISED CUT LENGTHS.

J. TIGHT CEILING SPACE WILL REQUIRE SOME SPRINKLER LINES TO OFFSET OVER OR UNDER DUCTWORK, PIPE, OR OTHER OBSTACLES. PROVIDE DRAINS AS REQUIRED.

K. SHOP DRAWINGS SHALL BE PROVIDED BY THE SPRINKLER CONTRACTOR USING AN REVIT COMPATIBLE FORMAT. SUBMIT TO OWNERS INSURANCE REVIEW CONSULTANT AND ARCHITECT AND ENGINEER. AS-BUILT DRAWINGS AND ELECTRONIC DRAWING FILES SHALL BE PROVIDED AT END OF PROJECT BY CONTRACTOR.

L. FIRE SPRINKLER SHOP DRAWINGS, CALCULATIONS AND MATERIALS SHALL BE SUBMITTED AND REVIEWED BY ENGINEER PRIOR TO SUBMITTING TO OTHER AUTHORITIES HAVING JURISDICTION.

M. FIRE SPRINKLER CONTRACTOR TO ACQUIRE ALL NECESSARY PERMITS AND/OR APPROVALS FROM CITY, COUNTY, AND STATE.

N. PRESSURE TEST AND CERTIFY SPRINKLER SYSTEM.

O. PIPE ROUTING, ELEVATIONS, SPRINKLER LOCATIONS, ARE SCHEMATIC, AND SHALL BE USED AS REFERENCE ONLY. INSTALLER SHALL FIELD VERIFY CONDITIONS, AND PROVIDE OFFSETS AS REQUIRED FOR INSTALLATION. DEVIATION FROM SCHEMATIC PLAN SHALL BE APPROVED IN WRITING BY THE ENGINEER, PRIOR TO INSTALLATION.

P. NEW FIRE PROTECTION WORK TO INCLUDE HEADS AND PIPING SYSTEM AS REQUIRED TO MEET NFPA REQUIREMENTS.

Q. NEW PIPING TO BE SCHEDULE 40 STEEL PIPE LISTED FOR FIRE PROTECTION.

R. SEE ARCHITECTURAL PLANS FOR CEILING HEIGHTS.

S. SUBMIT FIRE PROTECTION DRAWINGS TO LANDLORD'S/OWNER'S INSURANCE REVIEW CONSULTANT.

T. COORDINATE WITH AHJ FOR SYSTEM DESIGN REQUIREMENTS.

U. COORDINATE PIPE ROUTING WITH OTHER TRADES.

GSBS ARCHITECTS

375 WEST 200 SOUTH
SALT LAKE CITY, UT 84101

P 801.521.8600
F 801.521.7913

www.gsbsarchitects.com

REVISIONS:

1	03-27-2015	ADDENDUM #1

WSU DAVIS CAMPUS D13 REMODEL

875 SOUTH UNIVERSITY PARK BLVD.
CLEARFIELD, UT 84041

DFCM

4110 STATE OFFICE
BUILDING 450 NORTH
STATE STREET SALT
LAKE CITY, UT 84114

OWNER PROJECT NO.:	14297810
GSBS PROJECT NO.:	2014.095.00
ISSUED DATE:	03/09/2015

LEVEL 2 FIRE PROTECTION PLAN

FP102

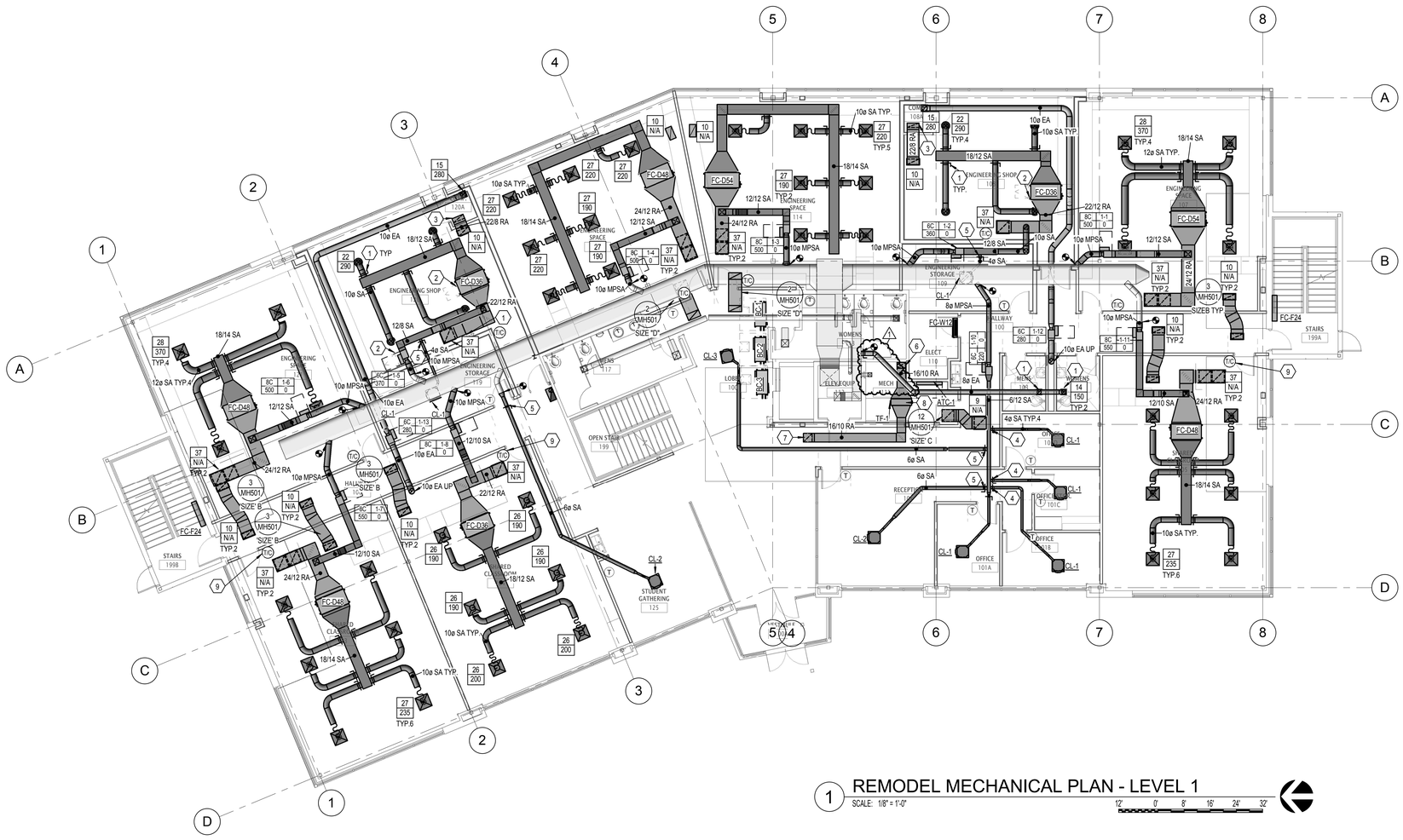

1 REMODEL MECHANICAL PLAN - LEVEL 1

SCALE: 1/8" = 1'-0"

12' 0' 8' 16' 24' 32'

KEYED NOTES

1. PROVIDE REMOTE DAMPER ACTUATOR. COORDINATE LOCATION WITH OWNER AND ARCHITECT.
2. PROVIDE 24"x24" ACCESS PANEL.
3. ROUTE DUCT TO 12" ABOVE FLOOR. COVER OPENING WITH INSECT SCREEN.
4. BALANCE DAMPER TO 20 CFM.
5. BALANCE DAMPER TO 45 CFM.
6. ROUTE DUCT TO 12" ABOVE FLOOR. COVER OPENING WITH INSECT SCREEN.
7. DUCT TO BE OPEN ENDED FOR EXHAUST INTO CEILING PLENUM.
8. HANG FAN WITH SPRING ISOLATORS.
9. COORDINATE LOCATION OF THERMOSTAT/C02 SENSOR WITH ARCHITECTURAL AND ELECTRICAL DEVICES WITH DETAIL 2/EE701. (TYPICAL)

GENERAL NOTES

A. EXISTING REMAIN DUCT, EQUIPMENT AND PIPE IS SHOWN LIGHT AND WITH A THIN LINE. DEMOLITION DUCT, EQUIPMENT AND PIPE IS SHOWN DARK WITH A BOLD DASHED LINE. NEW DUCT, EQUIPMENT AND PIPE IS SHOWN DARK AND WITH THICK LINE.

B. CONTRACTOR TO MAINTAIN INTEGRITY OF ALL MECHANICAL ITEMS.

C. PATCH, REPAIR, AND CAP DUCTWORK AS REQUIRED.

D. 24" x 24" ACCESS PANEL WHERE REQUIRED.

E. NO DUCT OR PIPE TO RUN OVER ELECTRICAL PANEL.

F. COORDINATE DUCT RUN OUTS WITH EXISTING DUCT, PIPING, AND EQUIPMENT ON SITE.

G. COORDINATE DUCTWORK AND EQUIPMENT WITH ALL TRADES.

H. DIFFUSER DUCT RUNOUT SAME AS DIFFUSER NECK UNLESS NOTED OTHERWISE.

I. THERMOSTATS WITH INTEGRAL CO^2 SENSORS AND MANUAL OVERRIDE BUTTON FOR OCCUPANCY.

GSBS ARCHITECTS

375 WEST 200 SOUTH
SALT LAKE CITY, UT 84101

P 801.521.8600
F 801.521.7913

www.gsbsarchitects.com

REVISIONS:

1	03-27-2015	ADDENDUM #1

STEVEN L. DEMPSEY
03/09/15
187524

WSU DAVIS CAMPUS D13 REMODEL

875 SOUTH UNIVERSITY PARK BLVD.
CLEARFIELD, UT 84041

DFCM

4110 STATE OFFICE
BUILDING 450 NORTH
STATE STREET SALT
LAKE CITY, UT 84114

OWNER PROJECT NO.:	14297810
GSBS PROJECT NO.:	2014.095.00
ISSUED DATE:	03/09/2015

REMODEL MECHANICAL PLAN - LEVEL 1

MH101

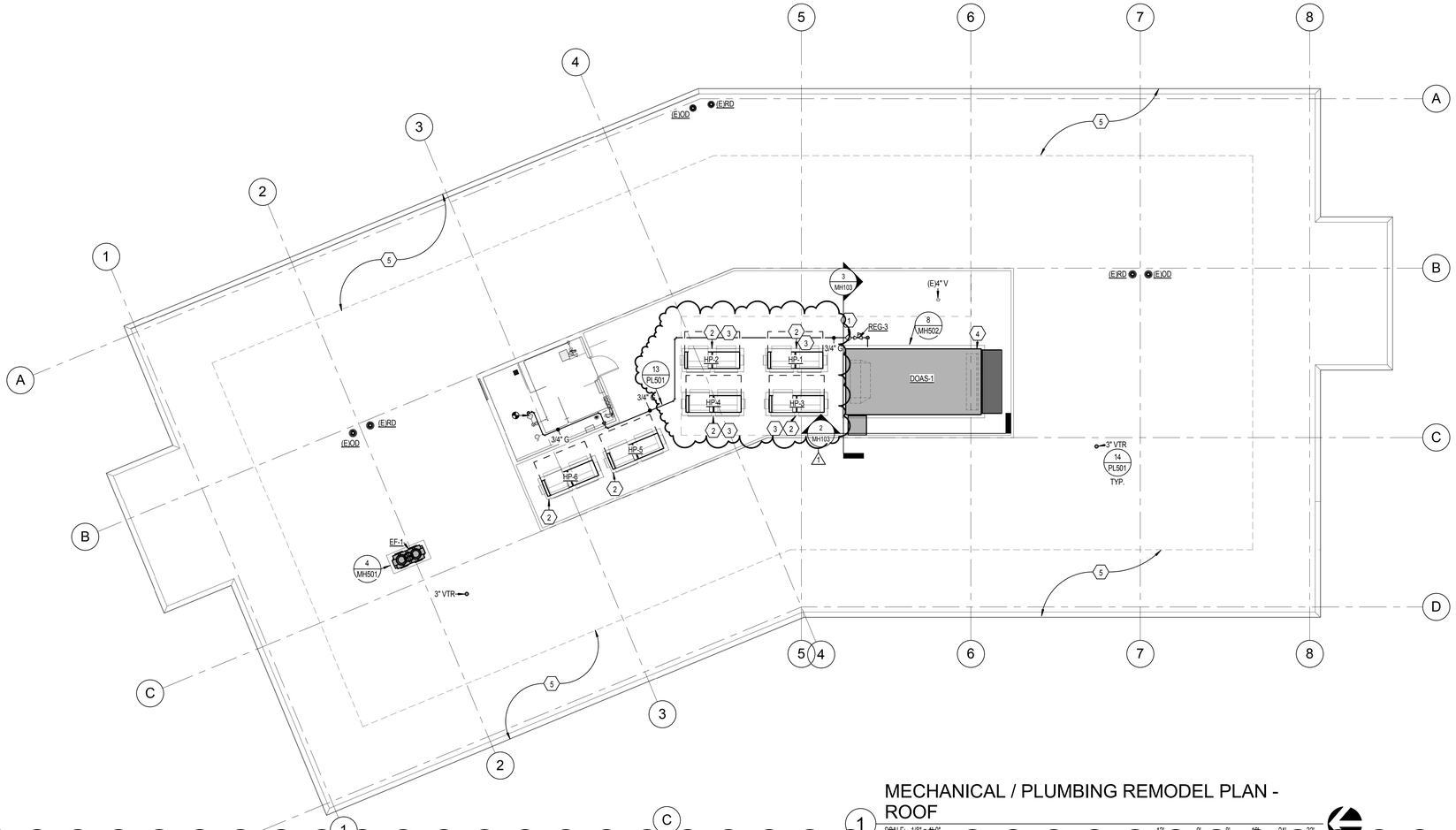

1 MECHANICAL / PLUMBING REMODEL PLAN - ROOF
SCALE: 1/8" = 1'-0"

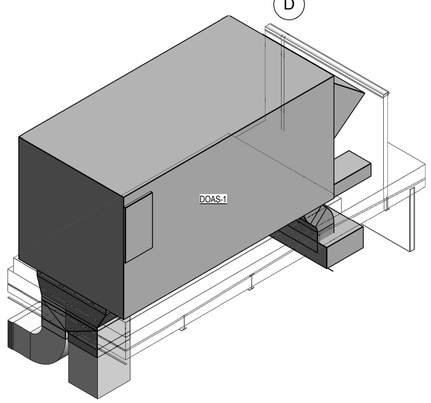

4 DOAS-1 UNIT CONNECTION ISO
SCALE:

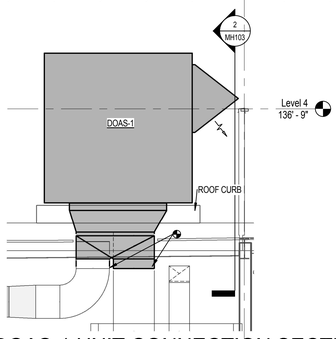

3 DOAS-1 UNIT CONNECTION SECTION
SCALE: 1/4" = 1'-0"

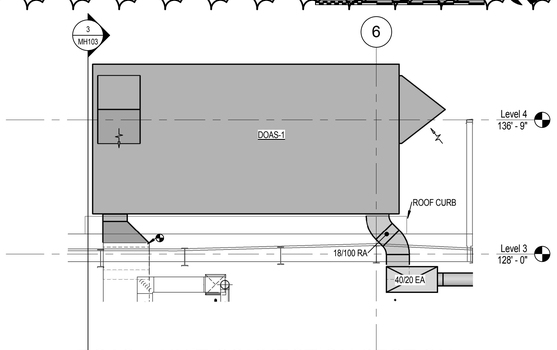

2 DOAS-1 UNIT CONNECTION SECTION
SCALE: 1/4" = 1'-0"

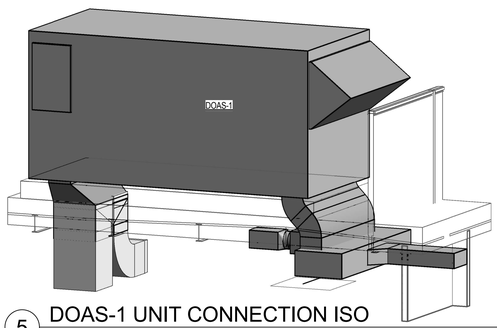

5 DOAS-1 UNIT CONNECTION ISO
SCALE:

KEYED NOTES

1. CONNECT 4OZ. GAS PIPE TO THE DOAS UNIT. PROVIDE WITH DIRT LEG, GAS COCK, AND UNION.
2. PROVIDE 14 HIGH ROOF CURB FOR MECHANICAL EQUIPMENT.
3. MOUNT ON EXISTING CONCRETE PAD.
4. COORDINATE DOAS UNIT PLACEMENT WITH ELECTRICAL TRANSFORMER AND PANEL FOR REQUIRED CLEARANCE.
5. ALL INSTALLED MECHANICAL EQUIPMENT SHALL NOT BE WITHIN 10'-0" OF THE EDGE OF THE ROOF (TYPICAL).

GENERAL NOTES

A. EXISTING REMAIN DUCT, EQUIPMENT AND PIPE IS SHOWN LIGHT AND WITH A THIN LINE. DEMOLITION DUCT, EQUIPMENT AND PIPE IS SHOWN DARK WITH A BOLD DASHED LINE. NEW DUCT, EQUIPMENT AND PIPE IS SHOWN DARK AND WITH THICK LINE.
B. CONTRACTOR TO MAINTAIN INTEGRITY OF ALL MECHANICAL ITEMS.
C. PATCH, REPAIR, AND CAP DUCTWORK AS REQUIRED.
D. 24" x 24" ACCESS PANEL WHERE REQUIRED.
E. NO DUCT OR PIPE TO RUN OVER ELECTRICAL PANEL.
F. COORDINATE DUCT RUN OUTS WITH EXISTING DUCT, PIPING, AND EQUIPMENT ON SITE.
G. COORDINATE DUCTWORK AND EQUIPMENT WITH ALL TRADES.
H. DIFFUSER DUCT RUNOUT SAME AS DIFFUSER NECK UNLESS NOTED OTHERWISE.
I. THERMOSTATS WITH INTEGRAL CO^2 SENSORS AND MANUAL OVERRIDE BUTTON FOR OCCUPANCY.

GSBS ARCHITECTS
375 WEST 200 SOUTH
SALT LAKE CITY, UT 84101
P 801.521.8600
F 801.521.7913
www.gsbsarchitects.com

REVISIONS:

1	03-27-2015	ADDENDUM #1

WSU DAVIS CAMPUS D13 REMODEL

875 SOUTH UNIVERSITY PARK BLVD.
CLEARFIELD, UT 84041

DFCM

4110 STATE OFFICE BUILDING 450 NORTH STATE STREET SALT LAKE CITY, UT 84114

OWNER PROJECT NO.:	14297810
GSBS PROJECT NO.:	2014.095.00
ISSUED DATE:	03/09/2015

MECHANICAL / PLUMBING REMODEL PLAN - ROOF

MH103

GSBS ARCHITECTS

375 WEST 200 SOUTH
SALT LAKE CITY, UT 84101

P 801.521.8600
F 801.521.7913

www.gsbsarchitects.com

REVISIONS:

1	03-27-2015	ADDENDUM #1

VARIABLE REFRIGERANT HEAT PUMP SCHEDULE (HP) (1)(2)(3)(4)(5)(6)(7)(8)(9)(10)(13)

PLAN CODE	SYSTEM SERVED	SOUND DBA	COMPRESSOR	COMPRESSOR #	IEER	FAN TYPE	FAN CFM	COOLING CAPACITY TOTAL BTU/H AT ALT.	COOLING CAPACITY EER	COOLING CAPACITY POWER kW	HEATING CAPACITY TOTAL BTU/h	HEATING CAPACITY COP	HEATING CAPACITY POWER kW	DIMENSIONS H X W X L (IN.)	ELECTRICAL PER MODULE (11) VOLTAGE/PHASE	MCA	MFS	REFRIGERANT	PIPING CONNECTIONS LIQUID PIPES	SUCTION GAS	GAS PIPES	OUTDOOR UNITS #	MAX INDOOR UNITS	MANUFACTURER & MODEL NO.	MAX. WEIGHT	REMARKS
HP-1	ONE	61	INVERTER-DRIVEN SCROLL HERMETIC	1 PER MODULE	16.1	PROP.	6200 PER MODULE	186,400	11.1	16	196,100	3.32	19	65X48X30 PER MODULE	480/3	32	35	R410A	7/8	1-1/8	1-1/8	2	16	MITSUBISHI ELECTRIC PURY-HP192YSKMU-A	1400	-
HP-2	TWO	61	INVERTER-DRIVEN SCROLL HERMETIC	1 PER MODULE	16.1	PROP.	6200 PER MODULE	186,400	11.1	16	196,100	3.32	19	65X48X30 PER MODULE	480/3	32	35	R410A	7/8	1-1/8	1-1/8	2	16	MITSUBISHI ELECTRIC PURY-HP192YSKMU-A	1400	-
HP-3	THREE	61	INVERTER-DRIVEN SCROLL HERMETIC	1 PER MODULE	16.1	PROP.	6200 PER MODULE	186,400	11.1	16	196,100	3.32	19	65X48X30 PER MODULE	480/3	32	35	R410A	7/8	1-1/8	1-1/8	2	16	MITSUBISHI ELCTRIC PURY-HP192YSKMU-A	1400	-
HP-4	FOUR	61	INVERTER-DRIVEN SCROLL HERMETIC	1 PER MODULE	16.1	PROP.	6200 PER MODULE	186,400	11.1	16	196,100	3.32	19	65X48X30 PER MODULE	480/3	32	35	R410A	7/8	1-1/8	1-1/8	2	16	MITSUBISHI ELECTRIC PURY-HP192YSKMU-A	1400	-
HP-5	FIVE	61	INVERTER-DRIVEN SCROLL HERMETIC	1 PER MODULE	16.1	PROP.	6200 PER MODULE	186,400	11.1	16	196,100	3.32	19	65X48X30 PER MODULE	480/3	32	35	R410A	7/8	1-1/8	1-1/8	2	16	MITSUBISHI ELECTRIC PURY-HP192YSKMU-A	1400	-
HP-6	SIX	61	INVERTER-DRIVEN SCROLL HERMETIC	1 PER MODULE	16.1	PROP.	6200 PER MODULE	186,400	11.1	16	196,100	3.32	19	65X48X30 PER MODULE	480/3	32	35	R410A	7/8	1-1/8	1-1/8	2	16	MITSUBISHI ELECTRIC PURY-HP192YSKMU-A	1400	-

(1) REFRIGERANT R410A
(2) PROVIDE 14" CURB/STAND
(3) PROVIDE LOW AMBIENT KIT TO -13°F.
(4) AT DESIGN CONDITIONS AND 99° F OUTDOOR TEMPERATURE TO CONDENSER.
(5) MULTI CONNECTION PIPE KIT VRV P SERIES HR #BHFP26P90U.
(6) RUN CONTROL WIRE TO INDOOR EVAPORATOR.
(7) ROUTE REFRIGERANT LINES FROM HEAT PUMP TO FAN COILS AS REQUIRED. ROUTE AND SIZE REFRIGERANT LINES PER MANUFACTURERS REQUIREMENTS.
(8) PROVIDE POWER METERING FOR EACH VRF SYSTEM. COORDINATE WITH ELECTRICAL PLANS FOR METER LOCATION AND REQUIREMENTS.
(9) VRF SYSTEM TO BE PROVIDED WITH FACTORY CONTROLS AND BE INTEGRATED WITH THE BMS.
(10) COOLING AND HEATING CAPACITIES AT 4450 FT. ELEVATION.
(11) EACH INDIVIDUAL MODULE REQUIRES A SEPARATE ELECTRICAL CONNECTION. REFER TO MANUFACTURER ELECTRICAL DATA.
(12) WEBER STATE UNIVERSITY STANDARD MANUFACTURER IS MITSUBISHI, NO OTHER MANUFACTURER ALLOWED.
(13) WITH STARTER

VRF FAN COIL INDOOR UNIT SCHEDULE (FC-D, FC-W) (1)(2)(3)(4)(5)(6)(7)(8)(9)(10)(11)(12)

PLAN CODE	TYPE	SUPPLY AIR FLOW (CFM) HIGH SPEED	SOUND LEVEL (dBA) HIGH SPEED	VOLT/PH	MCA	MFS (AMPS)	ESP (IN WG)	COOLING EAT DB/WB (°F)	HEATING EAT (°F)	COOLING COIL LAT (°F)	HEATING COIL LAT (°F)	TOTAL COOLING (BTU/HR)	SENSIBLE COOLING (BTU/HR)	HEATING (BTU/HR)	PIPE CONNECTIONS LIQUID	GAS	DRAIN	MAX. DIMENSIONS LENGTH (IN)	WIDTH (IN)	HEIGHT (IN)	OPERATING WT. (LBS.)	MANUFACTURER & MODEL NO	NOTES
FC-D12	DUCTED	370	34	208/1	1.2	15	0.6	80/67	70	55	88	10,100	7,580	10,575	1/4	1/2	1-1/4	29	28	10	51	MITSUBISHI PEFY-P12NMAU-E3	-
FC-D18	DUCTED	600	35	208/1	1.56	15	0.6	80/67	70	55	88	15,130	12,635	16,670	1/4	1/2	1-1/4	29	36	10	58	MITSUBISHI PEFY-P18NMAU-E3	-
FC-D36	DUCTED	1165	41	208/1	3.50	15	0.6	80/67	70	55	88	30,265	25,770	31,330	3/8	5/8	1-1/4	29	55	10	86	MITSUBISHI PEFY-P36NMAU-E3	-
FC-D48	DUCTED	1410	44	208/1	3.51	15	0.6	80/67	70	55	88	40,355	32,626	42,230	3/8	5/8	1-1/4	29	55	10	95	MITSUBISHI PEFY-P48NMAU-E3	-
FC-D54	DUCTED	1480	45	208/1	3.51	15	0.6	80/67	70	55	88	45,400	35,435	47,000	3/8	5/8	1-1/4	29	63	10	86	MITSUBISHI PEFY-P54NMAU-E3	-
FC-W12	WALL	410	45	208/1	0.38	15	0	80/67	70	55	88	10,090	8,080	10,600	1/4	1/2	1-1/4	36	10	12	29	MITSUBISHI PKFY-P12NHMU-E2	-
FC-W24	WALL	920	49	208/1	0.63	15	0	80/67	70	55	88	20,175	18,170	21,150	3/8	5/8	1-1/4	46	12	12	46	MITSUBISHI PKFY-P24NMU-E2	-
FC-F24	FLOOR	500	49	208/1	0.63	15	0	80/67	70	55	88	20,175	13,900	21,150	3/8	5/8	1-1/4	46	12	12	46	MITSUBISHI PFFY-P24NEMU-E	-

(1) WITH STARTER
(2) REFRIGERANT R410A
(3) PROVIDE WITH THERMOSTAT WITH INTEGRAL OCCUPANCY SENSOR AND INTEGRATE SETBACK (W/ DELAY) INTO CONTROLS SYSTEM. MITSUBISHI MODEL # PAR-U01MADU-G OR EQUAL
(4) NO FILTER REQUIRED AT DUCTED FAN COIL UNITS.
(5) ALL FILTERS PROVIDE BY SHEET METAL CONTRACTOR LOCATED IN RETURN AIR FILTER GRILLES.
(6) THERMOSTAT/CO² WITH OVERRIDE POWERED THROUGH VRF SYSTEM
(7) COOLING AND HEATING CAPACITIES AT 4450 FT. ELEVATION.
(8) PROVIDE WITH CONDENSATE PUMP AND BACKFLOW PREVENTER.
(9) PROVIDE WITH DUAL SET-POINT CAPABILITY.
(10) PROVIDE BACNET INTERFACE TO BUILDING AND CAMPUS CONTROLS SYSTEM. CITI-MULTI MODEL # BAC-HD150 OR EQUAL. VRF CONTROLS TO BE WIRED TO THE BACNET INTERFACE BY VRF INSTALLER. WIRING FROM THE BACNET INTERFACE TO THE BUILDING CONTROLS SYSTEM IS BY THE CONTROLS CONTRACTOR.
(11) WEBER STATE UNIVERSITY STANDARD MANUFACTURER IS MITSUBISHI, NO OTHER MANUFACTURER ALLOWED.
(12) PROVIDE LOCAL CONTROLLER WITH DISPLAY IN ADDITION TO CONNECTION TO CAMPUS CONTROL SYSTEM.

INDOOR UNIT BRANCH CONTROLLER SCHEDULE (BC) (1)(2)(3)(4)

PLAN CODE	SYSTEM SERVED	COOLING kW	HEATING kW	MAX INDOOR UNITS	VOLTAGE & PHASE	MCA	MFS	PIPING CONNECTIONS INDOOR LIQUID	INDOOR GAS	UNIT HIGH PRESSURE	UNIT LOW PRESSURE	MAX. DIMENSIONS WEIGHT (LBS)	DEPTH (IN)	WIDTH (IN)	HEIGHT (IN)	MANUFACTURER MODEL	REMARKS
BC-1	HP-1	0.274	0.137	16	208 1	1.65	15	3/8"	5/8"	7/8"	1-1/8"	220	21	44	12	MITSUBISHI CMB-P1016NJ-HA	WITH CONDENSATE PUMP AND BACKFLOW PREVENTER
BC-2	HP-2	0.274	0.137	16	208 1	1.65	15	3/8"	5/8"	7/8"	1-1/8"	220	21	44	12	MITSUBISHI CMB-P1016NJ-HA	WITH CONDENSATE PUMP AND BACKFLOW PREVENTER
BC-3	HP-3	0.274	0.137	16	208 1	1.65	15	3/8"	5/8"	7/8"	1-1/8"	220	21	44	12	MITSUBISHI CMB-P1016NJ-HA	WITH CONDENSATE PUMP AND BACKFLOW PREVENTER
BC-4	HP-4	0.274	0.137	16	208 1	1.65	15	3/8"	5/8"	7/8"	1-1/8"	220	21	44	12	MITSUBISHI CMB-P1016NJ-HA	WITH CONDENSATE PUMP AND BACKFLOW PREVENTER
BC-5	HP-5	0.274	0.137	16	208 1	1.65	15	3/8"	5/8"	7/8"	1-1/8"	220	21	44	12	MITSUBISHI CMB-P1016NJ-HA	WITH CONDENSATE PUMP AND BACKFLOW PREVENTER
BC-6	HP-6	0.274	0.137	16	208 1	1.65	15	3/8"	5/8"	7/8"	1-1/8"	220	21	44	12	MITSUBISHI CMB-P1016NJ-HA	WITH CONDENSATE PUMP AND BACKFLOW PREVENTER

(1) REFRIGERANT R410A (2) WITH STARTER
(3) VRF SYSTEM TO BE PROVIDED WITH FACTORY CONTROLS AND BE INTEGRATED WITH THE BMS. (4) WEBER STATE UNIVERSITY STANDARD MANUFACTURER IS MITSUBISHI, NO OTHER MANUFACTURER ALLOWED.

VRF CEILING CASSETTE UNIT SCHEDULE (CL) (1)(2)(3)(4)(5)(6)(7)(8)(9)

PLAN CODE	SUPPLY AIR FLOW (CFM)	SOUND LEVEL (dBA)	VOLT/PH	MCA/MFS	TOTAL COOLING (BTU/HR)	SENSIBLE COOLING (BTU/HR)	HEATING (BTU/HR)	PIPE CONNECTIONS LIQUID	GAS	DRAIN	MAX. DIMENSIONS LENGTH (IN)	WIDTH (IN)	HEIGHT (IN)	OPERATING WT. (LBS.)	MANUFACTURER & MODEL NO	NOTES
CL-1	350	38	208/1	0.29/15	6,725	6,070	7,050	1/4	1/2	1 1/4	22.5	22.5	8.25	40	MITSUBISHI PLFY-P08NCMU-E	-
CL-2	390	38	208/1	0.35/15	9,580	7,225	10,750	1/4	1/2	1 1/4	22.5	22.5	8.25	40	MITSUBISHI PLFY-P12NCMU-E	-
CL-3	390	38	208/1	0.35/15	11,940	9,290	13,770	1/4	1/2	1 1/4	22.5	22.5	8.25	40	MITSUBISHI PLFY-P15NCMU-E	-

(1) WEBER STATE UNIVERSITY STANDARD MANUFACTURER IS MITSUBISHI, NO OTHER MANUFACTURER ALLOWED.
(2) REFRIGERANT R410A
(3) PROVIDE WITH THERMOSTAT WITH INTEGRAL OCCUPANCY SENSOR AND INTEGRATE SETBACK (W/ DELAY) INTO CONTROLS SYSTEM. MITSUBISHI MODEL # PAR-U01MADU-G OR EQUAL
(4) WITH STARTER
(5) THERMOSTAT POWERED THROUGH VRF SYSTEM
(6) COOLING AND HEATING CAPACITIES AT 4450 FT. ELEVATION.
(7) PROVIDE WITH CONDENSATE PUMP AND BACKFLOW PREVENTER.
(8) PROVIDE WITH DUAL SET-POINT CAPABILITY.
(9) PROVIDE BACNET INTERFACE TO BUILDING AND CAMPUS CONTROLS SYSTEM. CITI-MULTI MODEL # BAC-HD150 OR EQUAL. VRF CONTROLS TO BE WIRED TO THE BACNET INTERFACE BY VRF INSTALLER. WIRING FROM THE BACNET INTERFACE TO THE BUILDING CONTROLS SYSTEM IS BY THE CONTROLS CONTRACTOR.

AIR DEVICE SCHEDULE

PLAN CODE — GRILLE / CFM

PLAN CODE	TYPE & DUTY	FACE SIZE	NECK SIZE	CEILING TYPE (2)	MAX. CFM	MAX TP (IN WC)	NC LEVEL MAX	MIN THROW (FT) (T50)	4-WAY MIN THROW (T50)	2-WAY MIN THROW (T50)	MANUFACTURER & MODEL NO	REMARKS
1	LINEAR-SUPPLY	24"L	6"□	MATCH CEILING	80	0.08	32	12	-	-	TEMPO L.D.	1 @ 1" SLOT
2	LINEAR-SUPPLY	24"L	8"□	MATCH CEILING	160	0.09	33	13	-	-	TEMPO L.D.	2 @ 1" SLOT
3	LINEAR-SUPPLY	24"L	8"□	MATCH CEILING	240	0.10	34	14	-	-	TEMPO L.D.	3 @ 1" SLOT
4	LINEAR-SUPPLY	24"L	10"□	MATCH CEILING	320	0.11	35	15	-	-	TEMPO L.D.	4 @ 1" SLOT
5	LINEAR-SUPPLY	48"L	8"□	MATCH CEILING	160	0.08	32	12	-	-	TEMPO L.D.	1 @ 1" SLOT
6	LINEAR-SUPPLY	48"L	10"□	MATCH CEILING	320	0.09	33	13	-	-	TEMPO L.D.	2 @ 1" SLOT
7	LINEAR-SUPPLY	48"L	12"□L	MATCH CEILING	480	0.10	34	14	-	-	TEMPO L.D.	3 @ 1" SLOT
8	LINEAR-SUPPLY	48"L	12"□	MATCH CEILING	640	0.11	35	15	-	-	TEMPO L.D.	4 @ 1" SLOT
9	PERFORATED RETURN	24" X 24"	22" X 22"	MATCH CEILING	1200	0.05	17	-	-	-	TITUS PAR	-
10	PERFORATED RETURN	24" X 12"	22"X 10"	MATCH CEILING	600	0.06	10	-	-	-	TITUS PAR	-
11	PERFORATED RETURN/EXHAUST	24" X 24"	22" X 22"	MATCH CEILING	1200	0.07	10	-	-	-	TITUS 8F	WITH OBD
12	PERFORATED RETURN/EXHAUST	24" X 12"	22" X 10"	MATCH CEILING	600	0.09	12	-	-	-	TITUS 8F	-
13	PERFORATED EXHAUST GRILLE	8" X 8"	6" X 6"	MATCH CEILING	120	0.12	10	-	-	-	TITUS 8F	-
14	PERFORATED EXHAUST GRILLE	10" X 10"	8" X. 8"	MATCH CEILING	225	0.12	12	-	-	-	TITUS 8F	-
15	PERFORATED EXHAUST GRILLE	12" X 12"	10" X 10"	MATCH CEILING	360	0.12	14	-	-	-	TITUS 8F	-
16	PERFORATED EXHAUST GRILLE	14" x 14"	12" X 12"	MATCH CEILING	550	0.12	16	-	-	-	TITUS 8F	-
17	PERFORATED EXHAUST GRILLE	16" X 16"	14" x 14"	MATCH CEILING	750	0.12	17	-	-	-	TITUS 8F	-
18	PERFORATED EXHAUST GRILLE	20" X 20"	18" X 18"	MATCH CEILING	1250	0.12	19	-	-	-	TITUS 8F	-
19	PERFORATED EXHAUST GRILLE	24" X 24"	22" X 22"	MATCH CEILING	1900	0.12	21	-	-	-	TITUS 8F	-
20	PERFORATED EXHAUST GRILLE	32" X 32"	30" X 30"	SURFACE	3600	0.12	24	-	-	-	TITUS 8F	-
21	RADIAL BLADE DIFFUSER	12"□	8"□	SURFACE	210	0.14	29	8 (1)	-	-	AIR DIFFUSION PRODUCTS DNR	-
22	RADIAL BLADE DIFFUSER	15"□	10"□	SURFACE	330	0.14	29	10 (1)	-	-	AIR DIFFUSION PRODUCTS DNR	-
23	RADIAL BLADE DIFFUSER	18"□	12"□	SURFACE	470	0.14	30	12 (1)	-	-	AIR DIFFUSION PRODUCTS DNR	-
24	RADIAL BLADE DIFFUSER	21"□	14"□	SURFACE	640	0.14	30	14 (1)	-	-	AIR DIFFUSION PRODUCTS DNR	-
25	RADIAL BLADE DIFFUSER	24"□	16"□	SURFACE	840	0.14	30	15 (1)	-		AIR DIFFUSION PRODUCTS DNR	-
26	RADIAL BLADE DIFFUSER	24" X 24"	8"□	GRID	210	0.14	29	8 (1)	-	-	AIR DIFFUSION PRODUCTS DNR	-
27	RADIAL BLADE DIFFUSER	24" X 24"	10"□	GRID	330	0.14	29	10 (1)	-	-	AIR DIFFUSION PRODUCTS DNR	-
28	RADIAL BLADE DIFFUSER	24" X 24"	12"□	GRID	470	0.14	30	12 (1)	-	-	AIR DIFFUSION PRODUCTS DNR	-
29	RADIAL BLADE DIFFUSER	24" X 24"	14"□	GRID	640	0.14	30	14 (1)	-	-	AIR DIFFUSION PRODUCTS DNR	-
30	RADIAL BLADE DIFFUSER	24" X 24"	16"□	GRID	840	0.14	30	15 (1)	-	-	AIR DIFFUSION PRODUCTS DNR	-
31	ADJUSTABLE LOUVERED	24" X 24"	6"□	MATCH CEILING	170	0.13	25	ADJUSTABLE	11	18	TITUS TDCA	18" x 18" CORE
32	ADJUSTABLE LOUVERED	24" X 24"	8"□	MATCH CEILING	310	0.13	27	ADJUSTABLE	14	24	TITUS TDCA	18" x 18" CORE
33	ADJUSTABLE LOUVERED	24" X 24"	10"□	MATCH CEILING	440	0.13	28	ADJUSTABLE	17	26	TITUS TDCA	18" x 18" CORE
34	ADJUSTABLE LOUVERED	24" X 24"	12"□	MATCH CEILING	600	0.14	28	ADJUSTABLE	21	33	TITUS TDCA	18" x 18" CORE
35	ADJUSTABLE LOUVERED	24" X 24"	14"□	MATCH CEILING	800	0.13	29	ADJUSTABLE	24	39	TITUS TDCA	18" x 18" CORE
36	ADJUSTABLE LOUVERED	24" X 24"	16"□	MATCH CEILING	950	0.11	29	ADJUSTABLE	26	41	TITUS TDCA	18" x 18" CORE
37	PERFORATED FILTER RETURN	24" X 24"	22" X 22"	MATCH CEILING	1200	0.05	17	-	-	-	TITUS 8RF	PROVIDE WITH FILTER AT TIME OF INSTALLATION
38	PERFORATED FILTER RETURN	24" X 12"	22" X 10"	MATCH CEILING	600	0.06	10	-	-	-	TITUS 8RF	PROVIDE WITH FILTER AT TIME OF INSTALLATION
39	BAR FLOOR DIFFUSER	6"	6" x L	-	230/FT	0.09	35	-	-	-	TITUS CT-480	-
40	BAR FLOOR DIFFUSER	8"	8" x L	-	300/FT	0.08	34	-	-	-	TITUS CT-480	-
41	THERMALLY CONTROLLED DIFFUSER	24" X 24"	8"□	GRID	260	0.15	35	-	-	-	THERMAFUSER	2-WAY CORNER

(1) RECOMMENDED MINIMUM DISTANCE BETWEEN DIFFUSERS IN 9' CEILING.
(2) VERIFY FRAME TYPE OF ALL AIR DEVICES WITH ARCHITECTURAL REFLECTED CEILING PLAN BEFORE ORDERING.

WSU DAVIS CAMPUS D13 REMODEL

875 SOUTH UNIVERSITY PARK BLVD.
CLEARFIELD, UT 84041

DFCM

4110 STATE OFFICE BUILDING 450 NORTH STATE STREET SALT LAKE CITY, UT 84114

OWNER PROJECT NO.:	14297810
GSBS PROJECT NO.:	2014.095.00
ISSUED DATE:	03/09/2015

MECHANICAL SCHEDULES

MH601

GSBS ARCHITECTS

375 WEST 200 SOUTH
SALT LAKE CITY, UT 84101

P 801.521.8600
F 801.521.7913

www.gsbsarchitects.com

REVISIONS:

1	03-27-2015	ADDENDUM #1

DEDICATED OUTDOOR AIR SYSTEM SCHEDULE WITH ERV (1) (2) (3) (4) (5) (6) (7) (8) (9) (10) (11) (12) (13)

PLAN CODE	CFM @ ELEV. (SUPPLY / EXHAUST)	EXTERNAL S.P.(IN. WC) (SUPPLY)	FANS (3)	B.H.P. EACH	H.P. EACH	FAN (SUPPLY/EXHAUST) RPM	VOLTAGE & PHASE	SUPPLY FAN CONTROL	EXHAUST FAN CONTROL	MCA TOTAL	MOP TOTAL	HEATING TYPE	HEATING INPUT MBH	HEATING OUTPUT MBH	HEATING EAT/LAT DB	DIMENSIONS LENGTH (IN.)	DIMENSIONS WIDTH (IN.)	DIMENSIONS HEIGHT (IN.)	DIMENSIONS OPER. WT. (LBS.)	MANUFACTURER & MODEL NO.	ERV SUMMER/WINTER RECOVERY EFF %	ERV EAT SUMMER/WINTER (DB)	ERV LAT SUMMER/WINTER (DB)	ERV SUPPLY/EXHAUST PD	ERV HEAT EXCHANGER TYPE	ERV MANUFACTURER & MODEL #
DOAS-1	12000 / 12000	2/2	2/2	5.11/4.72	7.5/7.5	1977/1947	480/3	MAIN AND BACK UP VFD (FOUR TOTAL)	MAIN AND BACK UP VFD (FOUR TOTAL)	40	45	GAS	800	580	43.5/95	240	116	117	16,000	INNOVENT ERU-OU-PL-12000-IF-460	60/61	97/0	83.8/43.5	0.89/0.87	CROSS FLOW FLAT PLATE ALUM	INNOVENT H-1-30A-2400

(1) PROVIDE SEISMIC BRACE SPRING VIBRATION ISOLATORS.
(2) PROVIDE MODULATING BURNER.
(3) DOAS-1 TO CONTROL HEATING TO MAINTAIN ADJUSTABLE DISCHARGE AIR TEMPERATURE.
(4) PROVIDE 2" MERV 8 FILTER
(5) 14" INSULATED CURB
(6) PROVIDE SINGLE POINT CONNECTION.
(7) RUN CONTINUOUSLY TO MAINTAIN LAB ROOMS ACH.
(8) ERV SEALED UP TO 3" W.G. TO ELIMINATE CONTAMINATION.
(9) INTEGRAL DISCONNECT SIZE 60.
(10) ERV MUST MEET AHRI 1060 CERTIFICATION.
(11) ERV TO BE MADE FROM CORROSION RESISTANT MATERIAL.
(12) PROVIDE UNIT WITH VFD AS SCHEDULED ON SHEET MH602.
(13) HEAT EXCHANGER WITH BYPASS PLENUM

TRACCEL LABORATORY VENTURI SUPPLY VALVE (TSV) STANDARD SHUT-OFF VALVES (1)

PLAN CODE — VALVE NO.
MAX CFM — MIN CFM
OPERATING CFM

PLAN CODE	INLET SIZE (IN)	MIN/MAX INLET SP (IN WC)	MAXIMUM AIRFLOW CFM	MAX SP DROP @ MAX AIRFLOW (IN WC)	MIN. CONTROL AIRFLOW CFM	MAX dBA RADIATED @ 1.5" WC (2)	MANUFACTURER/ MODEL	COMMENTS
8TSV	8"	0.6/3.0	600	0.6	35	43	PHOENIX ACCEL II TSV	-
10TSV	10"	0.6/3.0	850	0.6	50	44	PHOENIX ACCEL II TSV	-
12TSV	12"	0.6/3.0	1,300	0.6	90	45	PHOENIX ACCEL II TSV	-
14TSV	14"	0.6/3.0	1,600	0.6	200	42	PHOENIX ACCEL II TSV	-
16TSV	24" x 12"	0.6/3.0	2,600	0.6	180	47	PHOENIX ACCEL II TSV	TWO 12" VALVES IN FACTORY ASSEMBLY
18TSV	30" x 15"	0.6/3.0	3,000	0.6	400	49	PHOENIX ACCEL II TSV	TWO 14" VALVES IN FACTORY ASSEMBLY

(1) PROVIDE WITH PRESSURE SENSOR (2) MAXIMUM RC (N) = 40 WITH RECEIVER 7' BELOW VALVE WITH 16 LB/FT³ DENSITY SUSPENDED CEILING AT 9'-4" ABOVE FLOOR.

TRACCEL LABORATORY VENTURI EXHAUST VALVE (TEV) STANDARD SHUT-OFF VALVES (1)

PLAN CODE — VALVE NO.
MAX CFM — MIN CFM
OPERATING CFM

PLAN CODE	INLET SIZE (IN)	MIN/MAX INLET SP (IN WC)	MAXIMUM AIRFLOW CFM	MAX SP DROP @ MAX AIRFLOW (IN WC)	MIN. CONTROL AIRFLOW CFM	MAX dBA RADIATED @ 1.5" WC (2)	MANUFACTURER/ MODEL	COMMENTS
8TEV	8"	0.6/3.0	600	0.6	35	43	PHOENIX ACCEL II TEV	-
10TEV	10"	0.6/3.0	850	0.6	50	44	PHOENIX ACCEL II TEV	-
12TEV	12"	0.6/3.0	1,300	0.6	90	45	PHOENIX ACCEL II TEV	-
14TEV	14"	0.6/3.0	1,600	0.6	200	42	PHOENIX ACCEL II TEV	-
16TEV	24" x 12"	0.6/3.0	2,600	0.6	180	47	PHOENIX ACCEL II TEV	TWO 12" VALVES IN FACTORY ASSEMBLY
18TEV	30" x 15"	0.6/3.0	3,000	0.6	400	49	PHOENIX ACCEL II TEV	TWO 14" VALVES IN FACTORY ASSEMBLY

(1) PROVIDE WITH PRESSURE SENSOR (2) MAXIMUM RC (N) = 40 WITH RECEIVER 7' BELOW VALVE WITH 16 LB/FT³ DENSITY SUSPENDED CEILING AT 9'-4" ABOVE FLOOR.

EXHAUST FAN SCHEDULE (EF) (1) (2) (3) (4) (5)

PLAN CODE	AREA SERVED	TYPE	CFM @ ELEV	ESP @ ELEV	OUTLET VELOCITY	MOTOR BHP	MOTOR HP	MOTOR VOLT/ PH	dBA	DAMPER (GRAVITY OR MOTOR)	METHOD OF CONTROL	OPENING SIZE	MAX OPERATING WT (LBS)	MANUFACTURER & MODEL NO	REMARKS
EF-1	FUME HOOD	UTILITY SET	830	1	3110 FPM	0.482	0.5	115/1	70	MOTOR	CONTINUOUS	MATCH HOOD DUCT	2,500	COOK TCNHBLE	FAN ON FUTURE EMERGENCY POWER

(1) TWO FANS ON REDUNDANCY REFER TO SEQUENCE OF OPERATION FOR DETAILS (2) TUBULAR CENTRIFUGAL INLINE UPBLAST ROOF MOUNTED ARRANGEMENT 9 UTILITY EXHAUST FAN WITH 1X2 MIXING BOX (3) HEAVY DUTY 18" HIGH LAB EXHAUST CURB MODEL TCNHBLE
(4) BYPASS PLENUM WITH ISOLATION DAMPERS (5) NO OUTDOOR BYPASS AIRFLOW REQUIRED

TRANSFER FAN SCHEDULE (TF)

PLAN CODE	AREA SERVED	TYPE	CFM @ ELEV	ESP @ ELEV	FAN RPM	MOTOR BHP	MOTOR HP	MOTOR VOLT/ PH	SONES	DAMPER (GRAVITY OR MOTOR)	METHOD OF CONTROL	MAX OPERATING WT (LBS)	MANUFACTURER & MODEL NO	REMARKS
TF-1	MECH 111	INLINE	875	0.3	1050	0.28	0.334	115/1	2	GRAVITY	INTERLOCKED TO HPWH-1,2,3	100	COOK GN-522	FOR FAN SEQUENCE SEE SHEET MH702
TF-2	DATA 216	INLINE	1340	0.3	900	0.23	0.5	115/1	3.5	GRAVITY	STAT	110	COOK GN-920	FAN ON FUTURE EMERGENCY POWER

VARIABLE FREQUENCY DRIVE SCHEDULE (VFD)

PLAN CODE	SERVICE	H.P.	VOLTAGE & PHASE	REMARKS
VFD-1	DOAS-1 SF-1	7.5	460/3	- - (1)
VFD-2	DOAS-1 SF-2	7.5	460/3	- - (1)
VFD-3	DOAS-1 EF-1	7.5	460/3	- - (1)
VFD-4	DOAS-1 EF-2	7.5	460/3	- - (1)
VFD-5	DOAS-1 SF-1	7.5	460/3	BACK UP VFD (1)
VFD-6	DOAS-1 SF-2	7.5	460/3	BACK UP VFD (1)
VFD-7	DOAS-1 EF-1	7.5	460/3	BACK UP VFD (1)
VFD-8	DOAS-1 EF-2	7.5	460/3	BACK UP VFD (1)

(1) VFD WITH DOAS UNIT SUPPLIED BY DOAS UNIT MANUFACTURER, TO INTEGRATE VFD INTO DOAS WIRING. COORDINATE WITH BUILDING CONTROLS SYSTEM TO CONTROL SWITCH OVER BETWEEN MAIN VFD AND BACKUP VFD.

VAV COOLING ONLY

PLAN CODE — FLOOR-BOX NO
MAX CFM — MIN CFM
PLAN CODE — # - ##

PLAN CODE	INLET SIZE (IN)	DESIGN INLET SP (IN WC)	MAX CFM	MAX NC	MAX SP DROP (IN WC)	MIN CONTROL CFM
6C	6	1.0	500	34	0.22	80
8C	8	1.0	900	33	0.05	150
10C	10	1.0	1200	34	0.05	230
12C	12	1.0	1600	34	0.05	325
14C	14	1.0	2800	35	0.07	450
16C	16	1.0	3400	35	0.05	580
24C	24	1.0	5000	35	0.05	1400
24/16C	24 x 16	1.0	6200	35	0.05	1050

STEVEN L. CHERVICK 03/09/15 187524 STATE OF UTAH

WSU DAVIS CAMPUS D13 REMODEL

875 SOUTH UNIVERSITY PARK BLVD.
CLEARFIELD, UT 84041

DFCM

4110 STATE OFFICE
BUILDING 450 NORTH
STATE STREET SALT
LAKE CITY, UT 84114

OWNER PROJECT NO.:	14297810
GSBS PROJECT NO.:	2014.095.00
ISSUED DATE:	03/09/2015

MECHANICAL SCHEDULES

MH602

HYBRID ELECTRIC HEAT PUMP WATER HEATER SCHEDULE (HPWH) (1)

PLAN CODE	HP TOTAL HEATING CAP (MBH)	ENERGY EFFICIENCY	CAP (GAL)	RECOVERY @ 90° F (GPH)	ELECTRIC ELEMENT INPUT (KW)	TEMP RISE (°F)	MAX DIMENSIONS				MAX OPERATING WT (LBS)	MANUFACTURER & MODEL NO	REMARKS
							DIA (IN)	HEIGHT (IN)	VOLT/ PH	AMPS			
HPWH-1	8.7	2.78	50	21	4.5	90	21	76	208/1	24	650	RHEEM HB50RH	-
HPWH-2	8.7	2.78	50	21	4.5	90	21	76	208/1	24	650	RHEEM HB50RH	-
HPWH-2	8.7	2.78	50	21	4.5	90	21	76	208/1	24	650	RHEEM HB50RH	-

(1) AMBIENT TEMERATURE OPERATING RANGE (37°-120°).

MIXING VALVE SCHEDULE (MV)

PLAN CODE	MIN GPM	MAX GPM	INLET SIZE	OUTLET SIZE	MANUFACTURER & MODEL NO	REMARKS
MV-1	0.25	5	3/8"	3/8"	LEONARD 170	1,2
MV-2	0.25	12	1/2"	1/2"	LEONARD 270	1,2

(1) PROVIDE STAINLESS STEEL STRAINER, PORTS AND INTERNALS. (2) ASSE 1070

DOMESTIC HOT WATER RECIRCULATION PUMP SCHEDULE (1)

PLAN CODE	DUTY	GPM	FEET OF HEAD	PUMP RPM	MOTOR		MANUFACTURER & MODEL NO.	REMARKS
					H.P.	VOLTAGE & PHASE		
DCP-1	DOMESTIC HOT WATER RECIRC.	2	20	3250	1/40	115/1	TACO 006-B4-PNP-IFC	INLINE BRONZE

(1) PROVIDE PLUG END POWER CORD.

PLUMBING EXPANSION TANK SCHEDULE (PET)

PLAN CODE	SYSTEM SERVED	WATER TEMP (°F)	TANK VOL (GAL)	ACCEPTANCE FACTOR	PRE-CHARGE (PSI)	MAX DIMENSIONS			MANUFACTURER & MODEL NO	REMARKS
						DIA (IN)	H (IN)	OPERATING WT (LBS)		
PET-1	DOMESTIC HOT WATER	140	2.1	0.9	40	10	10.5	22	AMTROL THERMA-X-TRO'L ST-5-C	PROVIDE WITH POTABLE WATER BLADDER.

NATURAL GAS PRESSURE REGULATOR SCHEDULE (REG)

PLAN CODE	TYPE	INLET PRESURE (PSIG)	OUTLET PRESURE (OZ/ SQ IN)	LOAD (BTUH)	GAS DELIVERY (CFH)	REMARKS
REG-1	SELF-OPERATING SPRING LOADED DIAPHRAGM	2	4	21,000	24	-
REG-2	SELF-OPERATING SPRING LOADED DIAPHRAGM	2	4	21,000	24	-
REG-3	SELF-OPERATING SPRING LOADED DIAPHRAGM	2	4	800,000	900	-

PLUMBING FIXTURE SCHEDULE

PLAN CODE	DESCRIPTION	ROUGH-IN SIZE					REMARKS
		C.W.	H.W.	TEMPERED	WASTE	VENT	
WC-1A	WATER CLOSET, ADA COMPLIANT, WALL MOUNT, MANUAL FLUSH VALVE, SIPHON JET, VITREOUS CHINA 1.28 GPF	1"	-	-	3"	2"	KOHLER "KINGSTON" K-4325 SEAT: OLSONITE #10CC/SS FLUSH VALVE: ZURN Z6000PL-HET COLOR: WHITE SEE ARCH DRAWINGS FOR MOUNTING HEIGHT
WC-2	WATER CLOSET, STANDARD WALL MOUNT, MANUAL FLUSH VALVE, SIPHON JET, VITREOUS CHINA 1.28 GPF	1"	-	-	3"	2"	KOHLER "KINGSTON" K-4325 SEAT: OLSONITE #10CC/SS FLUSH VALVE: ZURN Z6000PL-HET COLOR: WHITE SEE ARCH DRAWINGS FOR MOUNTING HEIGHT
U-1	URINAL, ADA COMPLIANT, VITREOUS CHINA, SIPHON JET, MANUAL FLUSH VALVE, 0.125 GPF	3/4"	-	-	2"	1 1/2"	KOHLER "BARDON" K-4904-ET FLUSH VALVE: ZURN Z6003AV-ULF COLOR: WHITE SEE ARCH DRAWINGS FOR MOUNTING HEIGHT
L-1	COUNTERMOUNT OVAL LAVATORY, VITREOUS CHINA, 4" CENTERSET, CHROME WING HANDLE, FAUCET WITH GRID DRAIN, 0.5 GPM FLOW	1/2"	-	1/2"	1 1/2"	1 1/2"	AMERICAN STANDARD "RONDALYN" 0491.019 FAUCET: MOEN 8211
L-2	WALL MOUNT, RECTANGULAR LAVATORY, VITREOUS CHINA, 4" CENTERSET, CHROME WING HANDLE FAUCET WITH GRID DRAIN, 0.5 GPM FLOW	1/2"	-	1/2"	1 1/2"	1 1/2"	AMERICAN STANDARD "LUCERNE" 0355.012 FAUCET: MOEN 8211
S-1	SINGLE COMPARTMENT, RECTANGULAR STAINLESS STEEL, UNDER COUNTER MOUNT SINK, GOOSENECK SWING SPOUT WITH WING HANDLES, 0.5 GPM 18 GA.	1/2"	1/2"	-	1 1/2"	1 1/4"	BOWL: ELKAY EGUH2816R. PROVIDE OPENING FOR EEW-2 MOUNTING ON THE SINK. FAUCET: MOEN CA8940 STRAINER: ELKAY LKD2437BH
S-2	DOUBLE COMPARTMENT, RECTANGULAR STAINLESS STEEL, COUNTER MOUNT SINK, GOOSENECK SWING SPOUT WITH WING HANDLES, 0.5 GPM 18 GA.	1/2"	1/2"	-	1 1/2"	1 1/4"	BOWL: ELKAY LR 3321 FAUCET: MOEN CA8940 STRAINER: ELKAY LK-35 , OR EQUAL BOWL DEPTH: 12"
SS-1	SERVICE SINK, ENAMELED CAST IRON, WITH RIM GAURD, 3" GRID DRAIN AND FAUCET WITH VACUUM BREAKER, STOPS, TOP BRACE, CHROME FINISH.	3/4"	3/4"	-	3"	2"	SINK: KOHLER K-6710 FAUCET: KOKLER K-8907
EWC-1	ADA COMPLIANT, BARRIER FREE, STAINLESS STEEL, SURFACE MOUNT ELECTRIC WATER COOLER WITH BOTTLE FILLING STATION	3/8"	-	-	1 1/2"	1 1/4"	ELKAY #LZSTL8WSLK (ADA), BI-LEVEL FILTERED COOLER WITH BOTTLE FILLING STATION. 15 AMP, 115 VOLT, 60 HZ, SINGLE PHASE.
FD-1	FLOOR DRAIN	-	-	-	SEE PLANS	1 1/2"	J.R. SMITH MANUFACTURING COMPANY FIG. 2005Y-NB-U. DUCO CAST IRON FLOOR DRAIN. SEE PLANS FOR OUTLET SIZE. STRAINER GRATE MUST BE HEEL PROOF. PROVIDE WITH TRAP GUARD, OR EQUAL.
FD-2	FLOOR DRAIN (ACID RESISTANT)	-	-	-	SEE PLANS	1 1/2"	J.R. SMITH MANUFACTURING COMPANY FIG. DX-302TT-U. CAST IRON BODY WITH ACID RESISTANT COATED INTERIOR. SEE PLANS FOR OUTLET SIZE. STRAINER GRATE MUST BE HEEL PROOF. PROVIDE WITH TRAP GUARD , OR EQUAL.
FS-1	FLOOR SINK	-	-	-	SEE PLANS	1 1/2"	JAY R. SMITH SERIES 3100, ACID RESISTANT WITH TRAP GUARD AND DEEP SEAL TRAP.
SA-1	SHOCK ARRESTOR	3/4"	3/4"	-	-	-	PRECISION PLUMBING PRODUCTS SC-750. VANDAL PROOF OR EQUAL
MH-1	MANHOLE	-	-	-	-	-	60"ø DURA-CRETE. PROVIDE HEAVY DUTY MANHOLE COVER AND EXTENSION RINGS TO GRADE.
LSP-1	ISIMET - LABORATORY SERVICE PANEL WITH SOLENOID ASSEMBLY.120/1 VOLT, 1.5 AMP	-	-	-	-	-	ISIMET MODEL #LSP-4211-3-U GRAY PC ENCLOSURE WITH STAINLESS STEEL DOOR, FLUSH MOUNT 18"x18"x6" STANDARD ASSEMBLY WITH GROMMETS.120/1 VOLT.
GT-1	DECK MOUNT GAS TURRET WITH VALVE	-	-	-	-	-	TURRET: SINGLE OUTLET ZURN AQUA SPEC Z88000 VALVE: POLISHED CHROME PLATED BRASS ZURN AQUA SPEC Z80018-CS.
ESEW-1	EMERGENCY SHOWER WITH EYE WASH STATION WITH EMERGENCY THERMOSTATIC MIXING VALVE.	-	-	1 1/4"	-	-	BRADLEY S19-310FSS BRADLEY S19-2100 SET TEPID WATER TEMP @ 80°F
IMB-1	ICE MAKER BOX	1/2"	-	-	-	-	OATEY - MODEL 38575 - 6' S.S. HOSE AND VALVE
EEW-1	EMERGENCY EYE WASH STATION WITH EMERGENCY THERMOSTATIC MIXING VALVE. BARRIER FREE CABINET CONCEALED SWING DOWN EYE WASH	-	-	1 1/4"	2"	1 1/2"	BRADLEY S19294HB BRADLEY S19-2000 EFXB SET TEPID WATER TEMP @ 80°F
EEW-2	DECK MOUNTED, DRENCH HOSE EMERGENCY EYE WASH STATION WITH EMERGENCY THERMOSTATIC MIXING VALVE AND IN-LINE STRAINER.	-	-	1/2"	2"	-	GUARDIAN G5022BP SET TEPID WATER TEMP @ 80°F

GSBS ARCHITECTS

375 WEST 200 SOUTH
SALT LAKE CITY, UT 84101

P 801.521.8600
F 801.521.7913

www.gsbsarchitects.com

REVISIONS:

1	03-27-2015	ADDENDUM #1

WSU DAVIS CAMPUS D13 REMODEL

875 SOUTH UNIVERSITY PARK BLVD.
CLEARFIELD, UT 84041

DFCM

4110 STATE OFFICE
BUILDING 450 NORTH
STATE STREET SALT
LAKE CITY, UT 84114

OWNER PROJECT NO.:	14297810
GSBS PROJECT NO.:	2014.095.00
ISSUED DATE:	03/09/2015

PLUMBING SCHEDULES

PL601