CRSA PAYETTE

USU LIFE SCIENCES BUILDING PROGRAM

FINAL DOCUMENT MAY 13, 2016

APPROVALS

MAY 2016

Review Signatures

We have reviewed the Biological Sciences Building and BNR Renovation Program and warrant that it adequately represents our request for a facility to fulfill our mission and programmatic needs. All appropriate parties representing the University have reviewed it for approval.

5/12/16

Maura Hagan – Dean, College of Sciences Date

5-12-16

Chris Luecke – Dean, College of Natural Resources Date

5-12-16

Ben Berrett – Director, Facilities Planning, Design and Construction Date

Blank Page

ACKNOWLEDGEMENTS

CORE TEAM

The programming team would like to thank the Biological Sciences Program Executive Committee and Steering Committee for their valuable input and direction, without which it would not have been possible to prepare this facilities program. The members of these groups made themselves available throughout the process as often as needed to provide answers and feedback. They were essential to making the difficult decisions necessary to prepare a realistic and relevant planning document which will be the basis for the New Biological Sciences Building and BNR Building Renovation design.

These groups included the following members:

USU Executive Committee

Stan L. Albrecht	President
Noelle E. Cockett	Provost
Dave Cowley	Vice President, Business and Finance
Charles Darnell	Associate Vice President, Facilities

USU Steering Committee

Maura Hagan	Dean, College of Science
Richard Mueller	Associate Dean, College of Science
Lisa Berreau	Associate Dean, College of Science
Alan Savitzky	Department Head, Biology
Paul Wolf	Associate Department Head, Biology
Chris Luecke	Dean, College of Natural Resources
Mike Kuhns	Program Administrator, Department of Wildland Resources

USU Facilites Team

Ben Berrett	Director, Facilites Planning, Design and Construction
Jordy Guth	Architect, Facilites Planning Design and Construction
Kenneth Carrillo	Project Manager, Facilities Planning, Design and Construction
Mark Holt	Electrical Engineer, Facilities Planning, Design and Construction
Lorin Mortensen	Mechanical Engineer, Facilities Planning, Design and Construction
Jim Huppi	Landscape Architect, Facilities Planning, Design and Construction
Quinn Whitaker	Structural Engineer, Facilities Planning, Design and Construction

ADDITIONAL PARTICIPANTS

Programming this facility required input from many participants in addition to the Executive and Steering committees. Such involvement ranged from workshops to one-on-one consultations with the programming team. The following list includes those who made critical contributions to the programming and conceptual design process who have not been previously mentioned.

USU Department of Biology Faculty and Staff

Brett Adams	Associate Professor
Diane Alston	Professor and Co-Director of Graduate Program
Anne Anderson	Professor
Andy Anderson	Principal Lecturer and Prehealth Advisor
Michelle Baker	Professor
Scott Bernhardt	Assistant Professor
Edmund (Butch) Brodie	Professor
Ryan Davis	Anthropod Diagnostician, Plant Pest Diagnostic Lab
Edward (Ted) Evans	Professor
Carl Farley	Lecturer
John Flores	Senior Lecturer
Susannah French	Assistant Professor
Tim Gilberson	Professor
Zach Gompert	Associate Professor
Terry Griswold	Adjunct Assistant Professor and Director of USDA Bee Collection
Nancy Huntley	Professor and Director of Ecology Center
Karen Kapheim	Assistant Professor
Brad Kropp	Associate Professor
Lauren Lucas	Lecturer
Kami McNeil	Staff Assistant
Frank Messina	Professor
Keith Mott	Professor
Marion Murray	Integrated Pest Management Team leader
Claudia Nischwitz	Assistant Professor
James Pitts	Associate Professor and Curator of USU Insect Collection
Nancy Kay Pierson	Administration
Gregory Podgorski	Associate Professor
Ricardo Ramirez	Assistant Professor
Donald Roberts	Research Professor
Monical Schruhl	Business Assistant
Joe Shope	Systems Administrator
Lori Spears	Coordinator, Utah Cooperative Agricultural Pest Survey
John Stark	Professor

Kimberly Sullivan	Associate Professor
Jon Takemoto	Professor
Carol von Dohlen	Professor and Co-Director of Graduate Programs
Josh Wardle	Academic Advisor
Dennis Welker	Professor and Director of Undergraduate Studies

USU S.J. & Jessie E. Quinney College of Natural Resources Faculty and Staff

Chris Luecke	Dean
Mike Kuhns	WILD Department Head
Christopher Lant	ENVS Department Head
Peter Wilcock	WATS Department Head
Patirck Belmont	Associate Professor of Watershed Sciences
Shannon Belmont	Instructor of Environment and Science

Programming and Conceptual Design Team

Kathy Wheadon	Senior Principal, CRSA
Joe Milillo, AIA	Project Architect, CRSA
Megan Brown	Intern Architect, CRSA
Don Leslie	Landscape Architect, CRSA
Melissa Fryer	Site Planner, CRSA
Robert Schaeffner, FAIA	Principal, Payette
Arlen Li, AIA	Director of Laboratory Planning, Payette
Abby Klima, AIA	Architect, Payette
Stephanie Koltun	Designer, Payette
Michael Buehner, SE	Structural Engineer, Reaveley Engineers
Don Bradshaw, PE	Mechanical Engineer, Van Boerum and Frank Associates
Scot Muir, PE	Mechanical Engineer, Van Boerum and Frank Associates
Chris Kobayashi, PE	Electrical Engineer, Spectrum Engineers
Gerald Nelson, BSAT	Audio/Visual Designer, Spectrum Engineers
Danny McFarlane, PE	Civil Engineer, Civil Solutions Group
Dayton Law, EIT	Civil Engineer, Civil Solutions Group

TABLE OF CONTENTS

Approval Signatures
Acknowledgements (Client Team, University Participants, Design Team)
Table of Contents

Section 1 EXECUTIVE SUMMARY
- 1.1 Project Background
- 1.2 Project Vision and Goals
- 1.3 Space Program Summary
- 1.4 Scope of Construction
- 1.5 Cost Summary
- 1.6 Project Schedule

Section 2 EXISTING CONDITIONS ANALYSIS
- 2.1 Site Analysis of Existing Conditions
  - Foot Traffic
  - Bicycle Parking
  - Vehicular Traffic and Parking
  - Transit
  - Key Destinations
  - Site Amenities
  - Vegitation
  - Irrigation
- 2.2 Architecture
  - Existing Biology and Natural Resources Building (BNR)
- 2.3 Building Code
  - Existing Biology and Natural Resources Building (BNR)
- 2.4 Civil / Utilities
  - Existing BNR Building Site
    - General Site Conditions and Utilities
    - Sewer
    - Water
    - Storm Drain
    - Irrigation
    - Grading and Site
  - Proposed New Biological Sciences Building Site
    - General Site Conditions and Utilities
    - Sewer
    - Water
    - Storm Drain
    - Irrigation
    - Grading and Site
- 2.5 Structural / Seismic
  - Existing Biology and Natural Resources Building (BNR)
- 2.6 Electrical / Telecomm
  - Existing Biology and Natural Resources Building
    - Electrical Service
    - Telecommunication Service
    - Electrical distribution
    - Electrical devices and outlets
    - Raceways and pathways
    - Surge protective devices
    - Lightning protection
    - Emergency service and distribution
    - UPS
    - Lighting
    - Lighting controls
    - Exterior lighting
    - Fire alarm
    - Telecomm
    - Security systems - general
    - Clock systems
- 2.7 Mechanical
  - Existing Biology and Natural Resources Building
    - Campus central utility plant connection
    - Building cooling
    - Building heating
    - Air handlers
    - Air distribution
    - Laboratory exhaust
    - Data/comm/elec rooms
    - Perimeter radiation
    - Air intake and exhaust
    - Building automation controls
    - Domestic cold water service
    - Domestic hot water service
    - Pure water systems
    - Fire protection
    - Laboratory compressed air and vacuum
    - Laboratory waste systems
    - Existing cadaver lab
- 2.8 Hazardous Materials
  - Existing Biology and Natural Resources Building

Section 3 PROGRAM OVERVIEW
- 3.1 Summary of Programming Process
- 3.2 Space Inventory (Existing / Requested / Proposed)
  - 3.2.1 Existing
    - Biology and Natural Resources Building (BNR)
    - Programs in other buildings
      - Veterinary Science and Bacteriology (VSB)
      - Junction (JCTN)
      - Geology Building (GEOL)
  - 3.2.2 Requested
    - Biology Department
    - Quinney College of Natural Resources
    - University Classrooms
  - 3.2.3 Proposed Program
    - Space Summary
    - Graphic Program
    - Adjacency Diagrams
    - Room Data Sheets with Room Diagrams

Section 4 PROPOSED SOLUTION
- 4.1 Site
- 4.2 Blocking and Stacking Diagrams
- 4.3 Rendering and Massing Diagrams
- 4.4 Architectural Approach
  - Colored Floor Plan Diagrams
  - Building Sections
  - Sustainability
- 4.5 Building Narrative (Renovation of BNR Building | New Biological Sciences Building)
  - 4.5.1 Architecture (including exterior finish considerations)
  - 4.5.2 Sustainability/Resilience
    - USU commitment to sustainability
    - State of Utah committment to green buildings
    - Site Amenities
    - Water conservation and management
    - Land use
    - Buildings and systems
    - Preliminary LEED Points calculation
  - 4.5.3 Site / Landscape
  - 4.5.4 Civil / Utilities
  - 4.5.5 Structural / Seismic
  - 4.5.6 HVAC / Plumbing / Fire Sprinklers
  - 4.5.7 Electrical Systems
  - 4.5.8 Fire Alarm
  - 4.5.9 Telecommunications
  - 4.5.9 Information Technology / Audio-Visual Systems
  - 4.5.11 Acoustical
  - 4.5.12 Vending
  - 4.5.13 Elevator
- 4.6 Regulatory Codes (Renovation of BNR Building | New Biological Sciences Building)
  - 4.6.1 Structural
  - 4.6.2 Mechanical
  - 4.6.3 Electrical
  - 4.6.4 Civil
  - 4.6.5 Architectural

Section 5 COST MODEL
- 5.1 Total Project Cost Summary
- 5.2 Furniture, Fixtures & Equipment (FF&E) Cost Summary

Section 6 APPENDICES
- 6.1 Alternative Solutions
  - Overview of Alternatives – scope and estimated cost
  - Alternate 1
  - Alternate 2
- 6.2 Equipment Inventory
- 6.3 Tier 2 Seismic Analysis for BNR Building
- 6.4 BNR Upgrade Considerations Matrix
- 6.5 Room Data Sheets for future classrooms which could go in vacated spaces of the VSB Building
- 6.6 Second-opinion cost estimate from Parametrix

EXECUTIVE SUMMARY

1.1 Project Background

The proposed Biological Sciences Building project at Utah State University (USU) addresses the need to improve and augment existing science spaces, particularly for the Department of Biology in the College of Science, in order to provide the type, quality and quantity of modern facilities needed to support the essential programs offered to its students. While much of the department is currently housed in the Biology and Natural Resources (BNR) Building, many of its spaces are distributed over several locations on campus, including the Veterinary Science and Bacteriology (VSB) Building, the Biotechnology Center (BTEC), the Junction and the Geology building. The BNR was constructed in three phases starting in 1958, with the completion of the west wing, followed by the south wing in 1960 and the north wing in 1962. Biology space is located primarily in the north wing with partial occupancy in the west and south wings. Since the department's original move to the BNR when it opened, Biology course enrollment has quadrupled, but no significant new space has been added to support the growth. The Quinney College of Natural Resources (QNCR) is the other major tenant of the building, along with a few registrar classrooms. The age, scattered locations and compartmentalized physical layout of the current facilities are detriments to conducting current day science instruction and collaborative research.

Two previous studies related to facilities improvements, for the BNR in general and the Department of Biology specifically, have been published over the last 15 years, with the aspiration of securing funding for their implementation. In 2002, a master plan for remodeling of the BNR and selected additions was completed, with the stated goals of supplementing or rebuilding the building facades to improve aesthetics and energy performance, defining functional and building code related deficiencies and corrections, and providing a scope and organizational concept for adding new common student study areas. Ten years later, a 2012 Pre-Programming Study was finished for a proposed single new state-of-the-art facility to consolidate the majority of the Biology Department into one structure and thereby foster better teaching, research and collaboration among all building occupants. Neither of the projects defined by the two studies received funding for further development.

This Programming and Concept Study, begun in August, 2015, combines components of the two previous studies in a newly defined project, with one portion of the scope relating to a new building and the other portion focused on renovations and localized additions to the BNR. Acknowledging that constructing a single new facility large enough to house the entire Biology department is not feasible within anticipated funding limits, USU is taking the approach of building a smaller new facility and renovating Biology space that will need to remain in BNR. The combined scope is intended to provide modernized facilities for scientific teaching and research across the department. Included in the project are Biology teaching and research labs, support spaces, offices, formal and informal student study and gathering spaces, teaching spaces for the College of Natural Resources and registrar controlled general classroom space. The new building is proposed to be located on the now open site of the former Agricultural Sciences Building. Surrounding buildings are the BNR to the north, BTEC and Merrill-Cazier Library to the east, and Eccles Conference Center to the south. The site also adjoins a major north-south pedestrian mall on its west side.

As of this writing, the project is being considered for funding in the Utah State Legislature. If funding is approved, it is anticipated that the scope and planning concepts outlined in this report will form the basis for subsequent design phases.

1.2 Project Vision and Goals

A number of project goals, both general and specific, were stated during the initial phase of the study. An initial problem statement summarized the key issues: The Biological Sciences does not have the type, quality and quantity of space needed to support critical programs offered to the students of Utah State University. Opportunities to foster teaching, research and collaboration among faculty, students and administration are lagging behind its peers.

To address this, overall university goals that had been previously established were reiterated:

- Strengthen the recruitment, retention, graduation, and placement of students and, as part of that goal, reduce the student-faculty ratio.
- Build a socially and intellectually vibrant campus community, enhanced by the diversity of its faculty, staff, and students.
- Infuse new energy into graduate programs, particularly at the doctoral level.
- Foster new partnerships, both internally and externally.
- Communicate the success of the University to the world.

In addition to these overall goals, the project's Steering Committee, which included USU Facilities representatives, senior level (Dean, Associate Dean, Department Chair) user representatives and an Executive Vice Provost, reviewed and confirmed a number of project drivers early in the program process:

- Correct current deficiencies in biological teaching labs (quantity, size, infrastructure)
- Accommodate steady expansion in science enrollment
- Modernize BNR to state-of-the-art science facility (extend its usable life by another 50 years)
  - Reskin Building
  - Upgrade Research Facilities
  - Upgrade Building Systems/Increase Comfort
  - Create a High Performance Building
- Change paradigm for teaching and research labs
  - Provide spaces for collaboration
- Design a building that is a teaching tool with science on display
- Provide a model of sustainable design, emphasizing a connection of inside to outside
- Consolidate Biology on campus
  - Move Herbarium (out of Junction)
  - Relocate VSB Space
- Create a strong connection between the new building and BNR*

As the programming and concept design for the project progressed, the drivers identified above continued to be guides for the current planning and future design of the project. One exception to this (*) was that USU subsequently stated that the goal of providing a physical connection between the new building and BNR such as a bridge was not a priority for the current project. It may be a consideration for future work. Other drivers, notably the modernization of BNR, were sustained, but are proposed to be fully implemented in multiple phases that will extend beyond the scope of work of the current project. Finally, the goal of consolidating Biology on campus can be achieved in part, but the present planning leaves certain components such as the greenhouse and research space in BTEC remaining in their existing locations.

Regarding a specific programmatic goal for the building, USU stated at the start of the study that the primary focus of the project had changed from the previous iteration which emphasized research labs. The current direction was to provide new instructional spaces consisting primarily of teaching labs and general classrooms, recognizing that the number and condition of existing available spaces, especially teaching labs, are largely inadequate both for meeting increasing core course demands on the biology programs and for supporting the collaborative, discovery-based activity that characterizes present day science pedagogy. Subsequent clarification of this direction defined the new building portion as a more integrated science facility by including some component of research labs while still maintaining a primary presence of teaching spaces, with the BNR renovated to accommodate a similar mix but in an inverse ratio of more research lab to less teaching lab space. Furthermore, the user representatives stated that research labs were considered to function in part as teaching spaces, and therefore should be included in the discussion of teaching needs within a science building. Gathering and student study spaces, which are virtually non-existent in the BNR, are also a high priority for inclusion in the project, to foster group work and collaboration.

1.3 Program Space Summary

Although a previous space list for the Biological Sciences Building had been developed in 2012, the establishment of new parameters for the project warranted the reassessment of the list and generation of an updated program. In addition, further clarification of the program guidelines and overall project scope was provided in the "FY 2017 Capital Development Project Request & Feasibility Statement" which was issued by the University to support the funding request to the state legislature.

The Capital Development Request proposed allocations of space within the project, broken out by space category and location either within new or renovated facilities. In this document, the projected program included Biology teaching labs and research labs, prep and support rooms, separate collection labs for the Intermountain Herbarium, USDA National Pollinator Laboratory ("Bee Lab") and USU Entomological ("Insect") Collection, two new teaching labs for the College of Natural Resources, meeting and student study spaces, office space for faculty, staff and graduate students, general use classrooms and a student testing center. Approximately two-thirds of the new facilities to be built was anticipated to be instructional space.
With further development of the program based on detailed input from user groups, the space requests were refined and are shown in the table below. The proposed testing center was eliminated from the scope as USU was able to make arrangements to consolidate it with a central facility elsewhere. A vertebrate collections space was included and the classroom component was defined as a 350-person auditorium and a 115-person tiered classroom with a combination of fixed and movable tables for group interaction. At the University's direction, the original target of 7,500 nsf for classroom space was maintained, after some discussions about possibilities of increasing the allocation. Other space requests were also made and are acknowledged in Section 3.2.2 Requested Program. Due to the constraints of the budget, these additional spaces cannot be accommodated within the scope of this project, but are listed for future consideration. The proposed program is based on a feasible scope according to the current cost estimates, and does encompass the projected needs for the Biology department.

FY 2017 Capital Development Requests Space Type Profiles - July 2015

Space Category	Existing "Needs Analysis" Space to be Deleted	Existing "Needs Analysis" Space to be Renovated	Classification of "Needs Analysis" Space after Renovation	New "Needs Analysis" Space	Non-"Needs Analysis" Space Added/ Renovated/ Deleted (Net)	Total (c) + (d) + (e)
	(a)	*(b)*	*(c)*	*(d)*	*(e)*	*(f)*
100 - Classroom			6,100	7,500		13,600
200 - Teaching Labs		6,900	9,900	30,000		39,900
250 - Research Labs		29,100	20,100	17,000		37,100
300 - Office		9,600	7,500	6,500		14,000
400 - Study			2,000	3,000		5,000
520 - P.E. Special Use						0
500 - Other Special Use						0
600 - General Use						0
700 - Support				1,000		1,000
800 - Health Care						0
900 - Residential						0
000 - Unclassified						0
Subtotal - Net Assignable (NSF)		45,600	45,600	65,000	0	110,600
Non-Assignable/Structural		30,400	30,400	48,000	0	78,400
Total		**76,000**	**76,000**	**113,000** *	**0**	**189,000**

*103,000 for new building

Proposed Program Summary - Space Type Profiles

Space Category	NSF Program Allocation in BNR	NSF Program Allocation in New Building	NSF Program Total	Notes
	Note 1			
100 - Classroom		7,500	7,500	Note 2
200 - Teaching Labs	11,400	25,900	37,300	Note 3
250 - Research Labs	16,000	12,400	28,400	
300 - Office	8,600	5,300	13,900	
400 - Study	1,300	2,600	3,900	Note 4
520 - P.E. Special Use				
500 - Other Special Use				
600 - General Use	2,000	1,200	3,200	Note 5
700 - Support	100	1,400	1,500	
800 - Health Care				
900 - Residential				
000 - Unclassified				
Subtotal - Net Square Feet	39,400	56,300	95,700	
Non-Assignable/Structural	32,200	46,100	78,300	Note 6
Total (Gross Square Feet)	**71,600**	**102,400**	**174,000**	

Notes:

1. For BNR, the current concept plans include approximately 34,100 nsf of program in renovated space and 5,300 nsf of program in un-renovated space.
2. Testing Center in original capital development request eliminated from program.
3. Includes Collections spaces.
4. Includes Student Study Rooms and Informal Lounge/Study spaces.
5. Lobby addition to BNR (2,000 nsf) and Lobby in new building (1,200 nsf).
6. Non-assignable area calculated at 45% of total area - equivalent to 55% n/g ratio. Ratio may be different for BNR renovation.

1.4 Scope of Construction

The total project cost budget has been established at $69 million. Per USU, 75% of this amount, or $51.75 million, will be available for building construction. Furthermore, the allocation of funds between the new building and BNR remodel/additions portions has been set at approximately $45 million and $24 million respectively. The corresponding construction cost budgets are $33.75 million for the new building and $18 million for the BNR work.

Given these cost guidelines, the proposed concept plan for the project has been developed to generally align with the established limits. The proposed new building will total approximately 102,000 gsf, and include Biology teaching and research labs, a GIS lab for QCNR, Herbarium space, an advising center, faculty offices, student study and meeting spaces, university classrooms and a lobby/gathering space. The building will have a full basement, three full floors of program space, and an approximately 12,200 square foot mechanical penthouse.

The BNR remodel work will consist of a total renovation of the north wing, a renovation of the specific area of the south wing basement for the Hydrology lab and no renovation work elsewhere. The decision to focus on the north wing was based on the fact that it is already the primary location for Biology spaces and therefore the remodel will involve minimal disruption to the portions of BNR occupied by other groups. In order to meet the full needs of the Biology program, approximately 5,300 nsf of assigned Biology space will remain in un-renovated space in the west wing.

The north wing scope will include seismic upgrades to that portion of the building, structural upgrades to handle anticipated additional loading from collections spaces and a new mechanical penthouse, and replacement of the exterior skin portions that are currently metal and glass curtainwall. The latter will provide a high performance wall that should significantly reduce energy use and afford the opportunity for eye level view windows on the lab side of the building, instead of the current solid panels.

Beyond the renovation scope, a few localized additions to the BNR are proposed. One is a 2,000 nsf one-story addition to the lobby space on the west side of the west wing, enlarging the current area that is too small and oddly proportioned to allow large groups to gather and hold poster sessions or conduct other science community events. Another is a new stair and elevator tower to be located at the northwest corner. This will provide a code compliant means of egress for the remodeled portion of the building and also allow for the main corridor in the north wing to be extended to the west and connected directly to the west wing corridor, resulting in a clearer internal circulation path. Lastly, a new areaway at the basement level will be located adjacent to the new stair

and elevator tower, to provide space for electrical transformers. The total area of proposed renovations and additions to BNR is approximately 60,000 gsf.
One of the goals established during the study was to make the BNR suitable for another 50 years of life with appropriate renovation. From a structural perspective, it was decided that the entire building should be seismically upgraded, since the original design did not incorporate seismic restraining systems. However, with other priorities to be met as well, the current project budget will only allow for the north wing to be upgraded. It is anticipated that seismic upgrades to the remainder of the BNR will be implemented in future phases. In a similar manner, the replacement of the curtainwall will be limited to the north wing, with total replacement to be deferred.

1.5 Cost Summary

The program includes a programmatic estimate of construction costs and total project costs as follows:

	Estimated Cost
BNR Renovation and Addition - 61,700 gsf	$ 15,820,910
New Biological Sciences Building - 102,400 gsf (construction)	$ 28,275,770
	$ 44,096,681
General Conditions, Fees, Escalation & Contingency	
GC's, Fees, Insurances, Contingency, etc.	$ 9,260,303
Escalation Total Project from 1st Qtr 2016 to 3rd Qtr 2017	$ 2,401,064
Escalation BNR Portion from 3rd Qtr 2017 to 3rd Qtr 2019	$ 1,800,427
Total GCs, Fees, Escalation & Contingency	$ 13,461,795
Total Project Estimated Construction Cost	**$ 57,558,475**
Current Project Budget	
BNR Building Remodel / Addition	$ 18,000,000
New Biological Sciences Building	$ 33,750,000
Total Budget	**$ 51,750,000**
Amount Under or (Over) Budget	$ (5,808,475)

Chapter 5 includes a detailed cost estimate with several cost-savings options which include using University Capitol Improvement Money over multiple years to fund the seismic upgrade, exterior curtain wall replacement and upgraded mechanical systems within the BNR north-wing remodel. Another cost- savings option includes shelling the Herbarium space within the new Life Sciences Building for a future build-out not within this budget. A summary cost estimates from an independent cost estimator (done at the 75% completion point) can be found in the Chapter 6 Appendix.

Estimated soft costs have not been fully priced but are estimated in the range of 25% of the total project budget. This program has identified Fixtures, Furnishings and Equipment in the total of $2,701,789 as shown in Chapter 5 F.F.&E. summary. Other soft costs which will include AV/IT, moving expenses and fees should be further confirmed during the design process.

1.6 Project Schedule

Based on funding this coming legislative session, continuation into the design phase by CRSA | Payette should commence in May 2016. The design and construction process should then be phased to allow for the construction of the new Biological Sciences Building followed by the renovation and addition to the BNR Building.

The following schedule assumptions should be verified by the University's chosen Construction Manager / General Contractor (CM/GC). It is the design team's understanding that a CM/CG will be solicited in May-June 2016.

Approximate Design and Construction Schedule:

Design of Life Sciences Building	May 2016 - March 2017
Bidding & Construction, Life Sciences Building	April 2017 - October 2018
Move-in to Life Sciences Building	December 2018
Design of BNR Renovation (pending Legistaltive funding)	April-December 2017
Bidding & Construction, BNR Renovation	November 2018 - May 2020
Move-in to Renovated BNR	June - July 2020

Design and construction may be able to be accelerated beyond this schedule through fast-track delivery methods using multiple bid packages with the CM/GC. Fast-tracking may be able to accomplish getting subcontractors and suppliers under contract sooner and completing the project faster, thus lessen overall escalation costs. To provide meaningful benefit in terms of the university's academic calendar, the project would have to be available for occupancy at least one month before semester start dates.

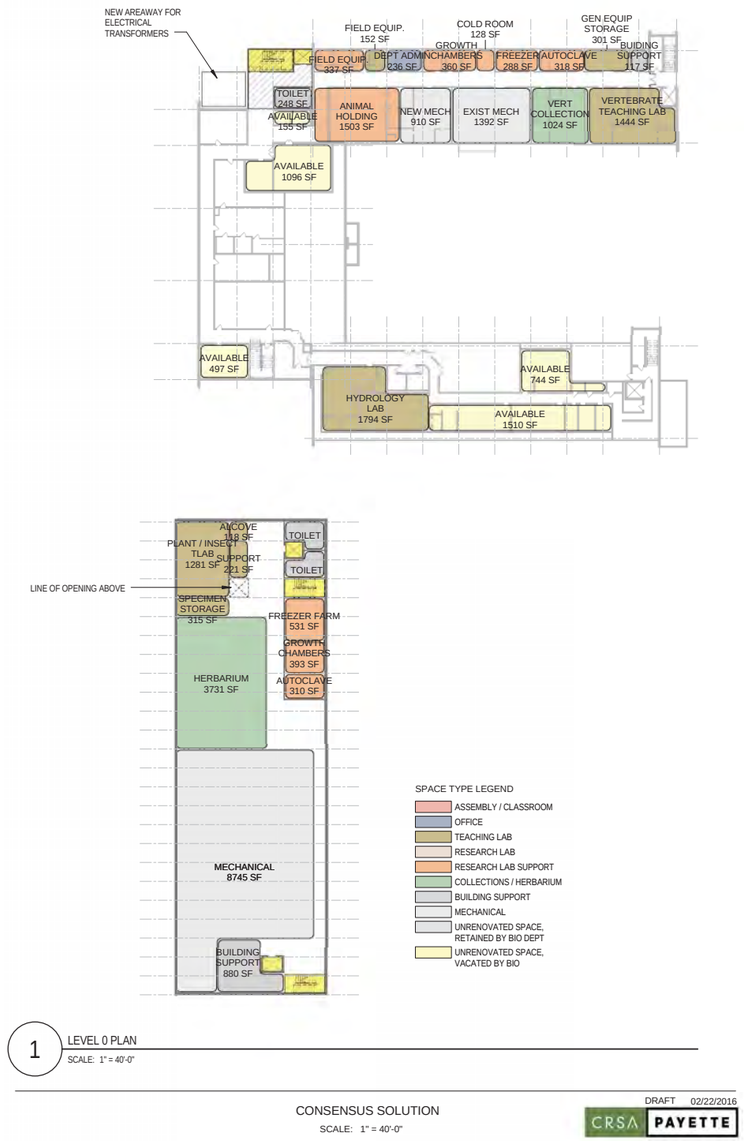

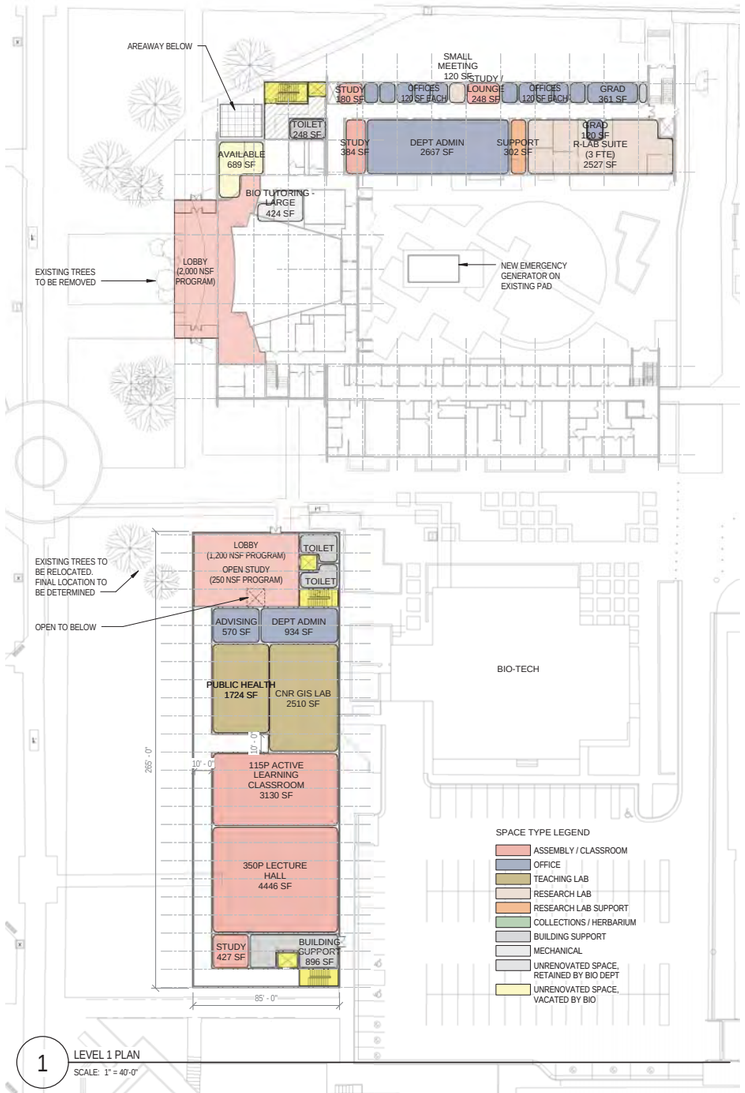

1 LEVEL 1 PLAN
SCALE: 1" = 40'-0"

CONSENSUS SOLUTION
SCALE: 1" = 40'-0"

DRAFT 02/22/2016
CRSA PAYETTE

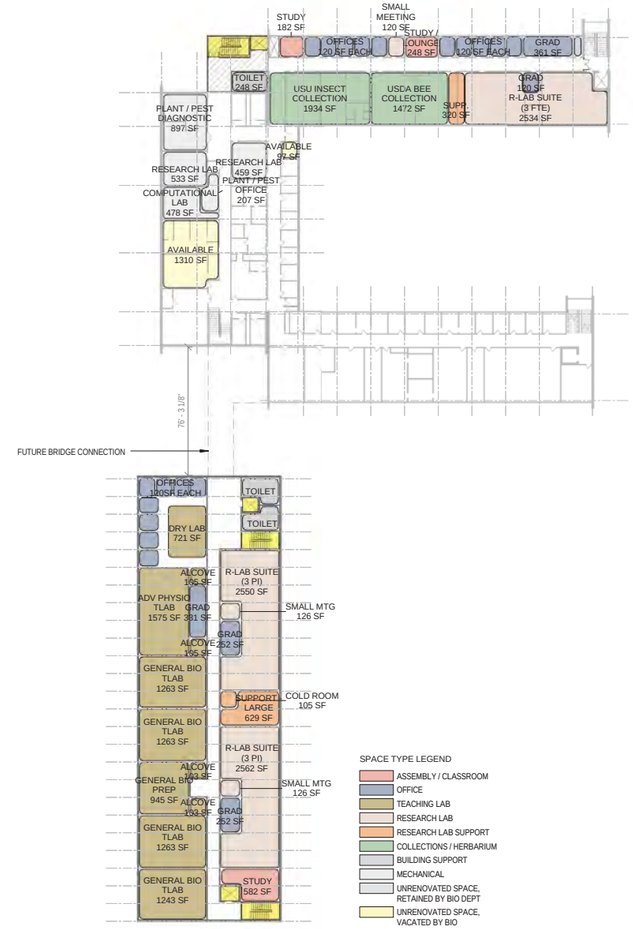

2 LEVEL 2 PLAN
SCALE: 1" = 40'-0"

CONSENSUS SOLUTION
SCALE: 1" = 40'-0"

DRAFT 02/22/2016
CRSA PAYETTE

3 LEVEL 3 PLAN
SCALE: 1" = 40'-0"

CONSENSUS SOLUTION
SCALE: 1" = 40'-0"

DRAFT 02/22/2016
CRSA PAYETTE

CRSA PAYETTE

EXISTING CONDITIONS ANALYSIS

2.1 Site Analysis of Existing Conditions

The existing Biology and Natural Resources Building (BNR) and the proposed Biological Sciences Building sit on adjacent sites in the central campus core, see site analysis diagram. What follows is an analysis of the existing conditions, both directly on the site, as well as in the surrounding context of the Utah State University campus. The purpose of this analysis is to inform future site design options for the Biology and Natural Resources (BNR) building and the proposed Biological Sciences building. These recommendations are preliminary in nature and will require further exploration and refinement during the desing phase.

Foot Traffic

Predominant pedestrian movement around the site occurs on the Campus' main north-south corridor, the dominate pathway that links Aggie Boulevard to Champ Drive. Additionally, the sidewalk between the existing BNR building and the proposed Biological Sciences building is heavily trafficked by students and faculty. Another crucial pathway runs west of the proposed Biological Sciences building location. This path provides a primary connection between the Taggart Student Center, Eccles Sciences Learning Center, LDS Institute, and Campus housing. The path on the southern side of the site, between the proposed building location and the Eccles Conference Center, is used primarily by staff and those needing access to the adjacent parking lot. This path incurs only minor use. A diagram of these paths may be viewed on the Existing Condition Diagram on the following page.

Bicycle Parking

Presently there are three bicycle parking facilities located adjacent to the BNR building. The first two are situated directly in front of the BNR building, just under the existing pines that flank either side of the building. The second, located behind the BNR at the north-east corner, is a covered bicycle parking structure.

Vehicular Traffic & Parking

Around the site vehicular traffic is chiefly limited to service vehicles. Pedestrian pathways are the principal means of accessing both the BNR and proposed Biological Sciences building. A limited-use parking lot sits adjacent to the proposed Biological Science location, however, this is a permitted lot available only to faculty and staff.

Transit

Alternative transportation options are readily accessible from the BNR and proposed Biological Sciences building. Less than a quarter mile away in each direction, users can access the Aggie Shuttles or busses from the Cache Valley Transit District.

Though there are no designated bicycle paths on campus, cyclists are encouraged to share the pathways with pedestrians.

Key Destinations

Nearby frequented destinations include:

- Merrill-Cazier Library — The main campus library which includes a café/coffee shop and study areas
- The Taggart Student Center — One of the central buildings to campus providing multiple student services as well as the campus food cour**t**
- Agricultural Sciences Building — Building that includes a café/coffee shop and lounge areas for study

Site Amenities

A small plaza sits directly south of the BNR building. This plaza features allées of flowering trees, picnic tables, and a small fish pond. During the warmer months students and staff utilize this area for eating, studying, socializing, or resting. The three wings of the BNR building create an east-facing courtyard which provides a semi-private and well-vegitated space with mature trees for quiet study and relaxation. This courtyard is utilized by those from the BNR building, and less frequently by the larger campus population. One bench, a wooden structure not in an ideal condition, sits in front of the BNR entrance. Intermittent seating can be found along the main pedestrian path.

Bob Hope planting Ponderosa Pines near the southwest entrance to the BNR building, Circa 1975. It is recommended that these trees remain and be protected during construction activites.

Vegetation

Several existing trees surround the BNR building, with the most notable being the two Ponderosa Pines (Pinus ponderosa) located at the south-west corner of the building which were planted by Bob Hope in the 1970's. On the north side of the BNR is a Japanese Umbrella Pine (Sciadopitys verticillata), a unique evergreen not typical to the northern Utah landscape. As the project advances into schematic design the relocation of this tree may be recommended if any additions to the BNR building encroach into it's biozone.

Located on the site for the proposed Biological Sciences building are two trees, an Austrian Pine (Pinus nigra) and a Bald Cypress (Taxodium distichum). Recommendations on the status of these two trees can be found in Chapter 4.

Bald Cyprus (left) and Austrian Pine (right) on site of future Biological Sciences Building. The status of these trees should be carefully considered when planning the future building footprint.

Irrigation

Both the existing BNR site and the new Biological Sciences building site have existing landscaping and irrigation systems. Verification of existing irrigation features such as locations of mainline, valves control wires, lateral lines, heads, etc. will be verified in future phases of design. No irrigation controllers can be seen on the project site.

2.2 Architecture

Existing Biology and Natural Resources Building (BNR)

The existing BNR building currently houses the bulk of the Biology Department's academic and research lab spaces. It also contains programs and spaces for the Quinney College of Natural Resources. The BNR was constructed approximately 55 years ago in three distinct phases:

Phase 1: West wing built C. 1959.
Phase 2: South wing built C. 1961.
Phase 3: North wing built C. 1963.

All wings contain a basement and three stories above grade. Construction is of concrete footings/foundations, structural steel columns, open web trusses with steel decking and concrete slab overlay. Much of the exterior structure is wrapped in the original curtain wall glazing system which remains in service to this day, however is extremely energy-inefficient due to its lack of thermally-broken windows frames and insulating glazing. The stair towers and the west facade are constructed of structural concrete masonry units with either brick or precast concrete panel veneer. The roofing has been replaced over the years and is currenty a single ply membrane style, most likely with a basic thickness of rigid insulation below.

As evidenced by the extensive number of small remodels over the years, this building has undergone much interior renovation and upgrading, sometimes associated with research grants and sometimes associated with university facilities upgrades. For the most part the building contains the original supply air handling system, most original ductwork, floor finishes, wall finishes, elevators and stair towers. Ceiling systems along with lighting and mechanical registers have been replaced over the years in many spaces. Sporadic and inconsistent upgrades in lab casework and equipment have happened over the years as research grant money became available to principal investigators. A new building-wide fire sprinkler system was installed in 2008. An overall fume hood upgrade was undertaken 15-20 years ago as well as the addition of a new cadaver lab with an associated, independent air handling unit added to the north wing roof.

2.3 Building Code

It is anticipated that the 2015 International Building Code (IBC), the International Existing Building Code (IEBC) and the International Enegry Conservation Code (IECC) will all become effective on July 1, 2016. The analysis of the existing BNR building will follow the 2015 IEBC whereas the new Biological Sciences Building will fall under the 2015 IBC. The 2016 IECC will be used for all new construction, both the BNR building and the proposed new building

Existing Biology and Natural Resources Building (BNR)

The intent of the 2015 IEBC is to provide flexibility to permit the use of alternative approaches to acheive compliance with minimum requirements to safeguard public health, safety and welfare insoar as they are affected by the repair of, addition to, alteration of, Change of Occupancy to or relocation of an existing building. The IEBC focuses on structural systems (gravity and seismic), fire safety (alarm and sprinkling), accessibility, electrical, mechancial, plumbing and energy use. An existing building is not required to be upgraded unless one or more of the following items are triggered:

1. Change in use or occupancy
2. Change in risk category
3. Unsafe conditions/damage
4. Change in structural loading
5. Change in structural framing
6. Building relocation

The renovation to the BNR building is not anticipated to change the use, occupancy or risk category of the building. There is no existing damage to the building which needs to be repaired and the building will not be relocated. The only trigger to the BNR renovation might be a change in structural loading. The loading of the north wing will most likely increase and the proposed structural soultion will be discussed in chapter 4 of this document.

As part of the original Capital Development Project Request, USU has identified several voluntary code upgrades which could take place in the BNR. They were identified and categorized into a cost scale matrix which was discussed with the facilties team during workshop #2 (a copy of this chart can be found in the appendix). They are listed as follows:

1. Revisions to the interior and exterior sewer sytems.
2. The extent of seismic upgrade to the BNR.
3. The extent of the mechanical systems upgrade, phased by wing and by floor.
4. The extent of upgrades to the electrical systems, phased by wing and by floor.
5. Several options for the upgrade of the existing curtain wall system.
6. Fire-rated shafts and egress stairs.
7. Existing restroom upgrades
8. Existing public space upgrades including, lobbies, hallways and common areas.

The Facilites Group discussed each item and made recommendations based on the overall benefit to the life-safety of the project balanced with the amount of funding available from various sources. These sources include the legislated project budget, donor funding and capital improvement money. Further discussion of these items can be found in Chapter 5 (COST MODEL) of this document.

2.4 Civil/Utilities

This section pertains to the existing utility conditions present for the BNR building as well as the utilites available for the new Biological Sciences Building. The renovations to the BNR building and the construction of the new Biological Sciences building may or may not happen simutaneously. Chapter 4 of this document outlines the impacts associated with these proposed projects. This information is programmatic in nature and will require further refinement in subsequent design phases.

Existing Biology and Natural Resources Building (BNR)

General Site Conditions and Utilities

A topographical and feature survey has not been completed for the project. The basis of the information presented here is based upon CAD data that was obtained from the USU Facility Department. All utility information presented in this section is based upon said data and will require a topographical and feature survey prior to design.

As a fully functioning building, the BNR already has all necessary services connected to it. These include electrical power, telecommunications, natural gas, sanitary sewer, water, and storm sewer. If existing service size(s) to the building need to be upgraded due to the proposed renovation, it will be noted in section 4 of this document.

The following sections detail the existing conditions of the specific utilities on site.

Sewer

According to the USU utility map there is currently an active 6-inch sewer main which runs through the basement of the BNR building at the point where the

EXISTING CONDITIONS
W/ PROPOSED PROJECT

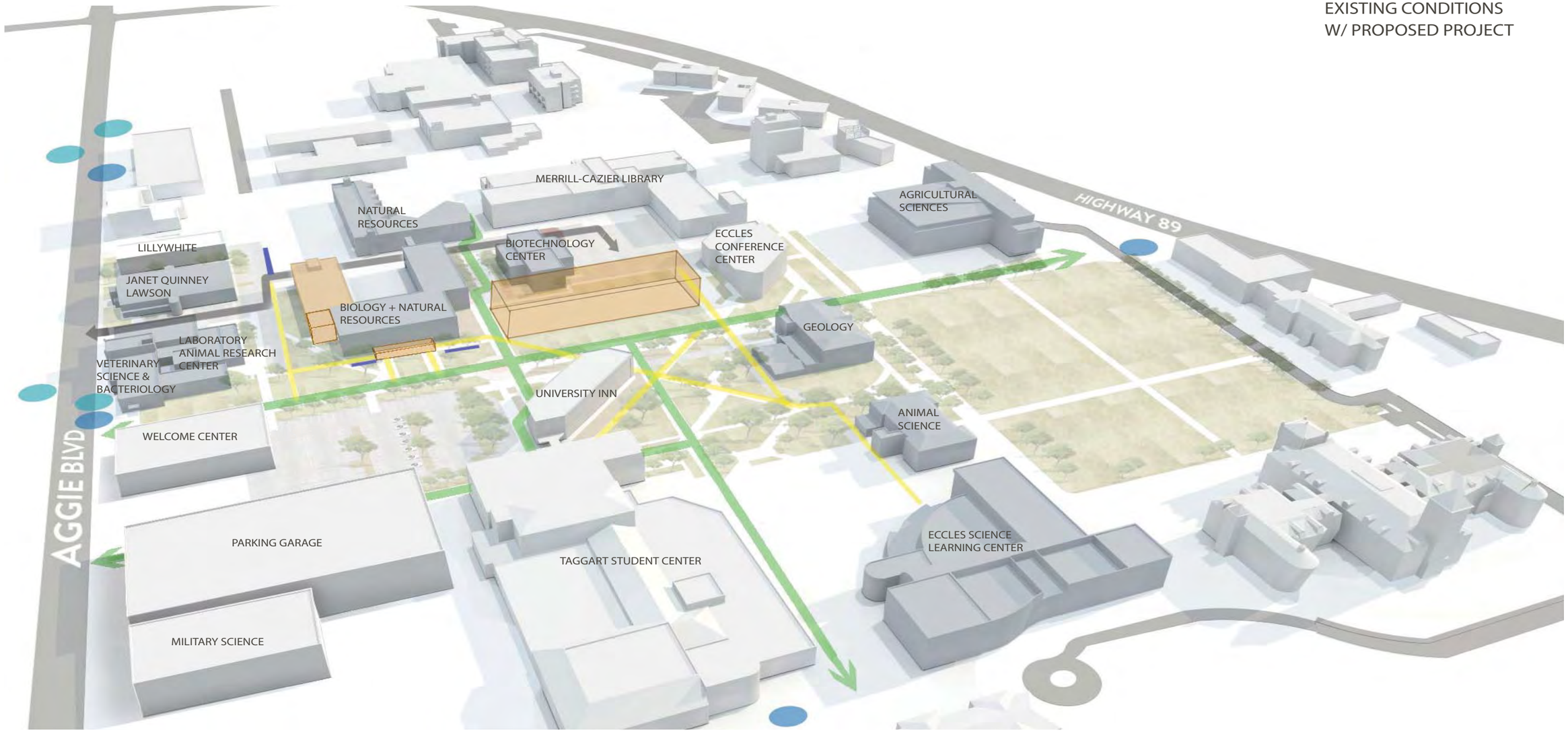

PRIMARY PEDESTRIAN PATHWAY
SECONDARY PEDESTRIAN PATHWAY
VEHICULAR ACCESS
CVTD BUS STOP
AGGIE SHUTTLE STOP
BICYCLE PARKING
PROPOSED PROJECT
SCIENCE CORE BUILDINGS

NORTH

west and south wings converge. The source comes from the BNR courtyard and runs through the basement at approx. 6'-6" above finish floor, then discharges the building at the southwest corner.

All sewer piping from inside the BNR building is directed to two sump pump systems in the basement, the sewer is pressurized and then discharged into the a 6-inch sewer main which then feeds into the 6" sewer line mentioned above (see BNR Sewer Map).

From this point the sewer is a is a gravity system that enters an existing sewer manhole located just south of the building. It then flows southwesterly into a siphon which runs underneath an existing utility tunnel. At the discharge of the siphon, the pipe then runs through a series of manholes on the proposed New Biological Sciences Building site until it crosses the main north-south utility tunnel at the midpoint of the future building site. It enters another siphon to pass underneath this main utility tunnel and continues in a downward flow towards the west.

Water

The USU utility map shows a 10" water line running north and south, west of the sidewalk on the west side of the BNR building. The 6" water service for the BNR building comes from this line into the southwest corner of the BNR building. It is anticipated that this service will remain undisturbed for the improvements related to this project.

Storm Drain

According to the USU utility maps there are two storm drain sumps to the west of the BNR building, and one on the south west corner. These sumps collect the roof drains from the building as well as the water that collects in the hardscape and landscape areas by the BNR building. These sumps percolate into the existing soil.

Natural Gas

The USU utility map shows a gas main line running in the east/west direction on the south side of the existing BNR building. An existing service is connected from the southwest corner of the BNR building to the existing gas main line. It is anticipated that this service will remain undisturbed for the improvements related to this project.

Irrigation

Irrigation infrastructure is covered in the landscape portion of this program document.

Grading and Site

The BNR project site is planar in nature and well-developed with pedestrian hardscape, and mature landscaping. It is anticipated that most of this existing site will remain intact.

To the southwest of the BNR building, the large pine trees ("Bob Hope" trees) should remain and be protected from damage during construction activities. These are important Heritage trees for the University and cannot be damaged by any construction activities. Temporary watering during construction will most likely be required as well as observation and care from a qualified landscaper.

Directly to the west of the BNR building are a series of mid-size bushes that will need to be removed completely in order for the new lobby addition to be built.

On the northwest side of the BNR building, the trees nearest the new stair tower addition will need to be removed or relocated due to construction activites. The schematic design process should identify the cost of relocation versus the probability of survival. These findings should be reviewed with the University Landscape Architect and the Steering Committee for approvals and justifications.

Proposed New Biological Sciences Building Site

General Site Conditions and Utilities

The New Biological Sciences Building is planned as a 4-story building (basement + 3 stories above grade) to be built just south of the BNR building. This empty site was the former location of the Agricultural Building which was demolished and backfilled several years ago after the new Agricultural Building was completed.

A topographical and feature survey has not been completed for the project. Neither has a soils report analysis. The basis of the information presented in this section is based upon CAD data that was obtained from the USU Facility Department. All utility information presented in this section is based upon said data and will require a topographical and feature survey along with a soils report prior to design.

Power, telecommunications, natural gas, sanitary sewer, water, and storm sewer will be required for this building. It should be noted that all necessary utilities are located adjacent to the proposed site. An existing utility tunnel located west of the proposed building will remain in service as a point of connection.

The following sections detail the existing conditions of specific utilities on site. Chapter 4 will outline any revisions and/or additions to these existing systems based on the needs of the new Biological Sciences Building.

Sewer

As noted in the previous section, an existing sewer system is present on the site and can be utilized for new effluent from the new Biological Sciences Building.

Water

The USU utility map shows an existing culinary water stub of unknown size at approximately the midpoint of the building, near the sidewalk running north and south. It is anticipated that culinary water service to the building will be connected to the USU water system at this point. Size and capacity should be determined prior to schematic design due to the fact that fire water will also need to tap off this stub.

Storm Drain

According to the USU utility maps there is a stormwater sump located approximately at the southeast corner of the building. The USU utility map shows this as a capped storm drain line. The survey should identify if this sump is actually in use or if it can be abandoned with no consequence.

Natural Gas

The USU utility map shows a gas main line running in the east/west direction on the north side of the proposed Biological Sciences building. It is anticipated that main line will be used to service the proposed Biological Sciences building.

Irrigation

Irrigation infrastructure is covered in the landscape portion of this program document.

Grading and Site

The project site is planer in nature with gentle slopes from east to west. Such topography is typical for this area. The site should remain relatively flat in nature once final grades are established. Exact slopes and elevations are unknown at this point without a topographical and feature survey.

2.5 Structural

Existing Biology and Natural Resources Building (BNR)

The BNR Building consists of three wings in a U-shape design creating an internal courtyard open to the east. Each wing was built at a separate time and represents an independent structure isolated from the other wings by expansion joints. Consequently, the building can be viewed as three separate

structures which move and act indepently from one another.

The first structure completed was the west wing, circa 1958-60. The south wing came next circa 1960-1962. The last to be constructed was the north wing circa 1962-64. The three buildings were constructed of similar structural elements - concrete footings and foundations, steel columns, open web steel joists, metal deck, concrete slabs and several reinforced CMU walls running from foundation to roof. The exterior skin is mostly non-structural aluminum curtain wall.

A review of the original building construction drawings indicates that all wings don't have specific lateral force resisting systems. A study performed in 2002 notes that the three wings' seismic lateral force resisting capacity is deficient. This was confirmed in an analysis done for this program (included in appendix).

The strategy for structural upgrades to the BNR building is shown in Chapter 4 of this report.

2.6 Electrical/Telecomm

Existing Biology and Natural Resources Building (BNR)

Electrical Service

The building is currently fed from the 12.5kV campus distribution system from a manhole on the north-west corner of the existing building. Power comes from this manhole to a medium voltage VFI switch, one 500 kVA at 480Y/277 and one 500 kVA at 280Y/120 located at grade on the north-west corner of the building. According to available USU metered information, the 480V system peak load is approximately 170 kVA and the 208V system peak load is approximately 60 kVA. The main switchboards are rated 1200A at 480Y/277 and 1600A at 208Y/120 located in the basement. The switch, transformers and main switchboards were upgraded around 1995, making them about 20 years old. At this point it is anticipated that these services may need to be upgraded in order to serve the increased loads of the north wing remodel. Final determination shall be made during design to determine if new larger services are required.

Telecommunication Service

The building is currently fed with both copper and fiber services from a manhole on the north-east corner of the existing building. The fiber and copper services into the building are in good condition. There is a non-dedicated space in part of the basement mechanical room that is used for the main telecomm equipment space, there is not dedicated cooling for the equipment space.

Electrical Distribution

The majority of the existing panelboards and feeders are from the original 1960's construction. These panels are beyond their useful life with replacement parts often no longer available. There has been remodel work over time where newer panels have been added, these are in fair condition.

Electrical Devices & Outlets

There is a mixture of original devices and outlets with newer devices and outlets that have been installed with remodels over the past 50 years. All devices within the renovation area shall be demolished and new devices provided.

Raceways & Pathways

The majority of the wiring observed is installed within conduit. There is no low voltage cabletray within the building, making changes and remodels more difficult and expensive.

Surge Protective Devices

No surge protection was observed within any of the existing gear.

Lightning Protection

No lightning protection currently exists for the building; most up-to-date lab buildings of this size with expensive lab equipment have lightning protection.

Emergency Service and Distribution

A small existing diesel generator estimated to be 45 kVA, 208Y/120V is located outside on the north-east corner of the building at grade. There is a single 125A ATS located in the basement feeding emergency lighting with the building. Fume hoods and HVAC are not connected to backup generator power. Lab equipment is not connected to the backup generator power.

UPS

A small 10 kVA UPS system exists in the basement telecomm space. This USP is sized and currently feeds the IT equipment loads within the building; there is not much if any spare capacity within the current system.

Lighting

The lighting is a mixture of original and newer lighting that has been done during remodels within the building. The existing fixtures are old and inefficient. The newer fixtures are generally T8 based fixtures.

Lighting Controls

The lighting controls are a mixture of manual light switches throughout the building. A few of the spaces that are more recently remodeled have occupancy sensors within them. Exterior lighting is relay based on a timeclock.

Exterior Lighting

The lighting consists of pedestrian scale metal-halide light poles with the old cube style USU standard that is no longer valid. The poles are generally located along the sidewalk that flanks the perimeter of the building.

Fire Alarm

The existing fire alarm system is newer and was installed within the last few years.

Telecomm

The existing phone data system is a mixture of older and more recent data cabling and systems.

Security Systems - General

The existing access control and card readers are relatively new and in good condition. No CCTV system was observed.

Clock System

Clocks are currently battery operated stand-alone clocks.

2.7 Mechanical

Existing Biology and Natural Resources Building (BNR)

Campus Central Utility Plant Connection

The campus central utility plant currently provides heating and cooling to the BNR building. Tunnel node #20 connects the campus tunnel system to the BNR building and supplies chilled water and high pressure steam & condensate to the west wing of BNR. Steam and chilled water piping enters the basement mechanical room in the west wing and is then extended to the north and south basement mechanical rooms.

Building Cooling

Variable flow pumps are installed in the basement mechanical room of the west wing.

Building Heating

Building heating is currently being provided by the campus central utility plant. Low pressure steam provides heating at the perimeter mounted steam radiators located around the building perimeter as well as at the supply air handling units located in the basement mechanical room.

Air Handlers

The north wing of BNR is current served by two constant volume multizone air handling units located in a basement mechanical room. The existing air handling units are original to the building and while they have been maintained well they have surpassed their useful service life and should be replaced.

Air Distribution

Each building level is separated into three thermostatic control zones. Low pressure supply ducts (Qty.12) extend from the air handling units through a vertical shaft and terminate at ceiling supply diffusers. A ceiling return air plenum at each level provides a path for airflow to enter a mechanical shaft at the northwest corner of the building to return to the basement air handling units.

Laboratory Exhaust

Laboratory areas containing chemical fume hoods and radioisotope fume hoods are provided with exhaust fans. A separate utility vent set exhaust fan with 10 ft tall exhaust stack serves each of the (Qty.10) chemical fume hoods and (Qty.4) radioisotope fume hoods. The fans operate at a constant airflow rate and run continuously

Data/Comm/Elec Rooms

The telecomm equipment is located in the basement mechanical room. There is no dedicated cooling for this equipment and heat is rejected to the return air plenum. Electrical rooms are similarly connected to the building HVAC system and do not have a dedicated cooling system.

Perimeter Radiation

The BNR building is currently equipped with steam finned tube heaters around the building perimeter. The steam and condensate piping is at the end of its useful life and is prone to leaks.

Air Intake and Exhaust

The air intake for the supply air handler is located in the basment areawell and will be re-used.

Building Automation Controls

The north wing is currently equipped with pneumatic controls original to the building construction.

Domestic Cold Water Service

A domestic cold water system currently serves the BNR building. It is anticipated that the main piping system and infrastructure will be reused. Plumbing fixtures within the existing toilet rooms will remain. Fixtures within the laboratory remodel will be removed as necessary.

Domestic Hot Water Service

Domestic hot water is currently generated by an instantaneous steam-to-domestic hot water heat exchanger located in the west wing basement mechanical room. It is anticipated that this existing system will continue to be used.

Pure Water System

A pure water system is currently installed in the basement mechanical room located in the west wing. The pure water needs of the new research laboratory spaces will be studied throughout the design process.

Fire Protection

The fire sprinkling system has been upgraded in the last five years and will continue to be used.

Laboratory Compressed Air and Vacuum

A compressed air and vacuum system is currently installed in the basement mechanical room located in the west wing. It is anticipated that the existing compressed air and vacuum system will be able to be reused.

Laboratory Waste System

There is a current laboratory waste system comprised of acid resistant glass waste piping and a dilution style tank. The existing laboratory waste piping drains to a dilution tank system that does not meet current building codes. It is anticipated that this sytem will be replaced.

Existing Cadaver Lab

The cadaver lab is located on level three and was added in a renovation approximately 15 years ago. A roof mounted air handling unit provides all the ventilation, exhaust, heating, and cooling needs for the cadaver lab. The air handling unit appears to be well maintained and in good working condition and is equipped with energy efficient features including a direct evaporative cooling and exhaust air heat recovery. It is anticipated that the existing air handling unit will remain in place to serve the cadaver lab.

2.8 Hazardous Materials

Existing Biology and Natural Resources Building (BNR)

A hazardous materials report has been completed by USU at a prior date. A copy is available from USU upon request. It is anticipated that there are hazardous materials present in the building and they will need to be removed under a separate contract and budget prior to any remodel work happening in the BNR Building under this contract.

Blank Page

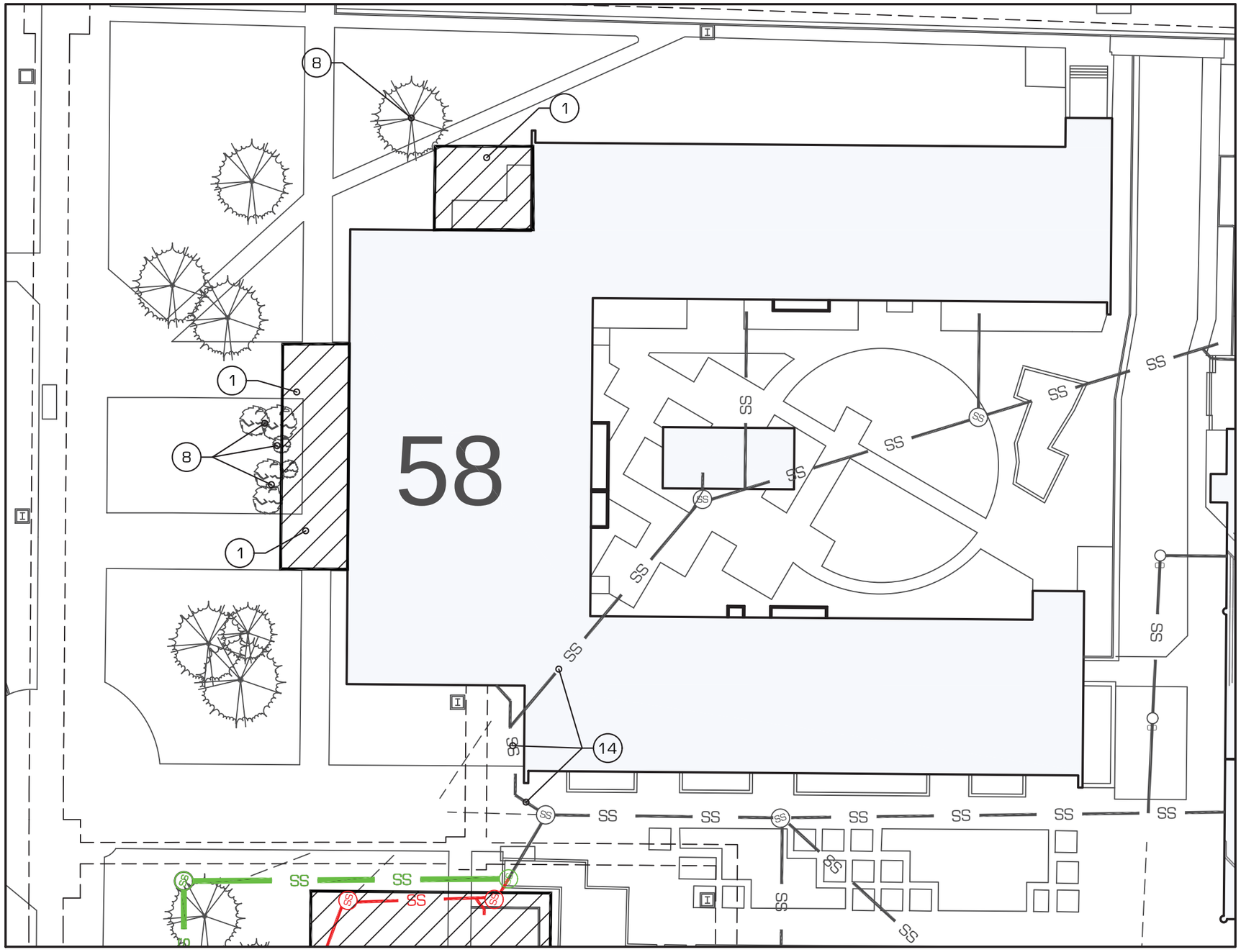

① SHEET KEY NOTES:

1. PROPOSED ADDITION TO THE BNR BUILDING.
2. PROPOSED BIOLOGY BUILDING.
3. PROPOSED LOCATION OF NEW GAS METER.
4. PROPOSED GAS LINE.
5. PROPOSED SEWER MANHOLE AND SEWER LINE.
6. PROPOSED WATER LINE.
7. EXISTING TREES TO BE RELOCATED ON SITE SUBJECT TO BUDGET REVIEW.
8. EXISTING TREES TO BE REMOVED.
9. STORM DRAIN INFRASTRUCTURE AND LINES TO BE RELOCATED.
10. INSTALL STORM DRAIN SUMP.
11. INSTALL STORM DRAIN BOX AND LINE.
12. EXISTING SEWER INFRASTRUCTURE TO BE REMOVED.
13. EXISTING WATER LINE TO REMAIN.
14. EXISTING SEWER LINE TO REMAIN.
15. EXISTING GAS LINE TO REMAIN.
16. EXISTING STORM DRAIN INFRASTRUCTURE TO REMAIN.

COLOR LEGEND:

EXISTING TO REMAIN

EXISTING TO BE REMOVED

PROPOSED

PROPOSED BNR BUILDING
SEWER UTILITY PLAN
UTAH STATE UNIVERSITY

N

0 40' 80'

civilsolutionsgroup inc.

CRSA PAYETTE

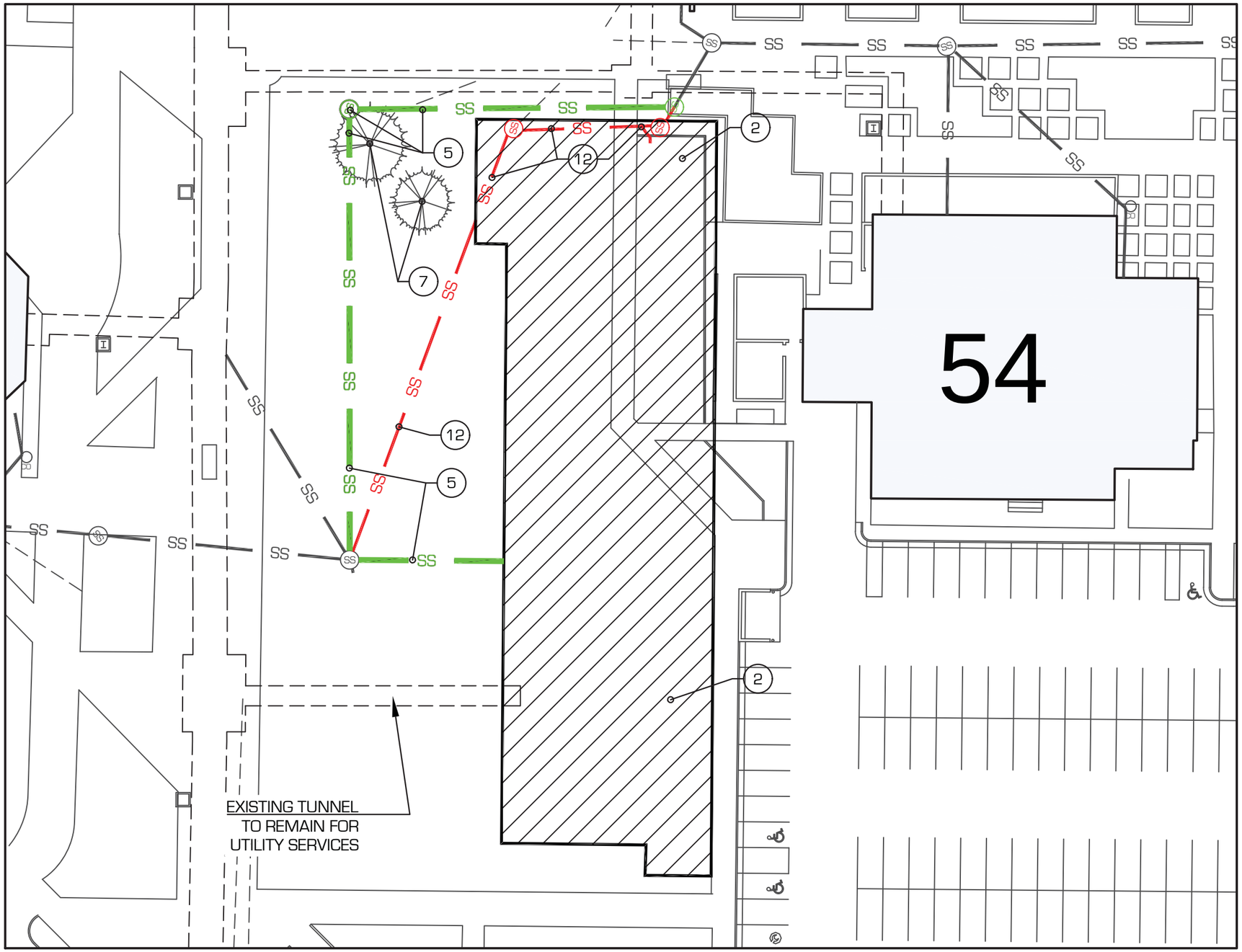

① SHEET KEY NOTES:

1. PROPOSED ADDITION TO THE BNR BUILDING.
2. PROPOSED BIOLOGY BUILDING.
3. PROPOSED LOCATION OF NEW GAS METER.
4. PROPOSED GAS LINE.
5. PROPOSED SEWER MANHOLE AND SEWER LINE.
6. PROPOSED WATER LINE.
7. EXISTING TREES TO BE RELOCATED ON SITE SUBJECT TO BUDGET REVIEW.
8. EXISTING TREES TO BE REMOVED.
9. STORM DRAIN INFRASTRUCTURE AND LINES TO BE RELOCATED.
10. INSTALL STORM DRAIN SUMP.
11. INSTALL STORM DRAIN BOX AND LINE.
12. EXISTING SEWER INFRASTRUCTURE TO BE REMOVED.
13. EXISTING WATER LINE TO REMAIN.
14. EXISTING SEWER LINE TO REMAIN.
15. EXISTING GAS LINE TO REMAIN.
16. EXISTING STORM DRAIN INFRASTRUCTURE TO REMAIN.

COLOR LEGEND:

EXISTING TO REMAIN

EXISTING TO BE REMOVED

PROPOSED

PROPOSED BIO BUILDING
SEWER UTILITY PLAN
UTAH STATE UNIVERSITY

N

0 40' 80'

civilsolutionsgroup inc.

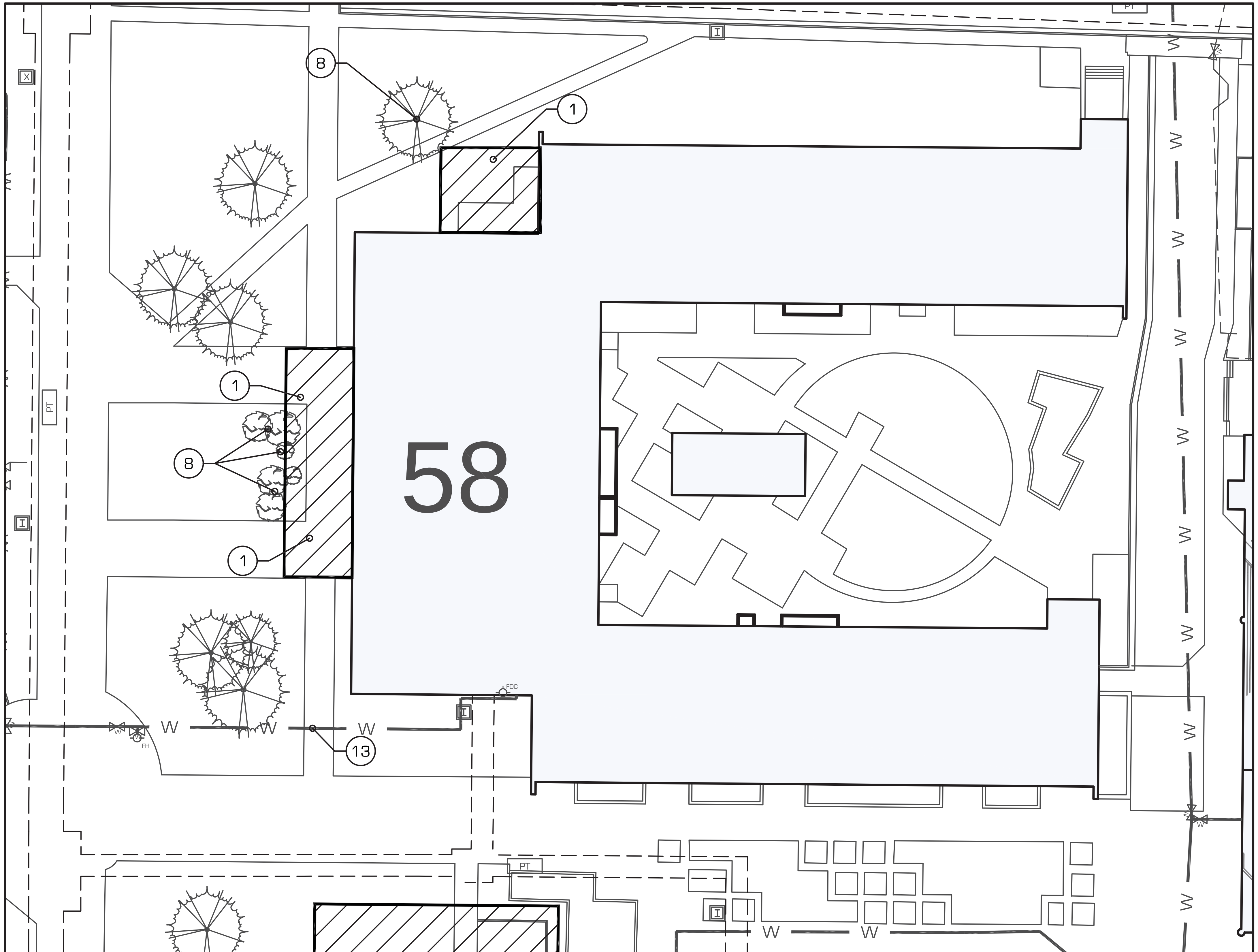

① SHEET KEY NOTES:

1. PROPOSED ADDITION TO THE BNR BUILDING.
2. PROPOSED BIOLOGY BUILDING.
3. PROPOSED LOCATION OF NEW GAS METER.
4. PROPOSED GAS LINE.
5. PROPOSED SEWER MANHOLE AND SEWER LINE.
6. PROPOSED WATER LINE.
7. EXISTING TREES TO BE RELOCATED ON SITE SUBJECT TO BUDGET REVIEW.
8. EXISTING TREES TO BE REMOVED.
9. STORM DRAIN INFRASTRUCTURE AND LINES TO BE RELOCATED.
10. INSTALL STORM DRAIN SUMP.
11. INSTALL STORM DRAIN BOX AND LINE.
12. EXISTING SEWER INFRASTRUCTURE TO BE REMOVED.
13. EXISTING WATER LINE TO REMAIN.
14. EXISTING SEWER LINE TO REMAIN.
15. EXISTING GAS LINE TO REMAIN.
16. EXISTING STORM DRAIN INFRASTRUCTURE TO REMAIN.

COLOR LEGEND:

EXISTING TO REMAIN

EXISTING TO BE REMOVED

PROPOSED

PROPOSED BNR BUILDING
WATER UTILITY PLAN
UTAH STATE UNIVERSITY

N

0 40' 80'

civilsolutionsgroupinc.

CRSA PAYETTE

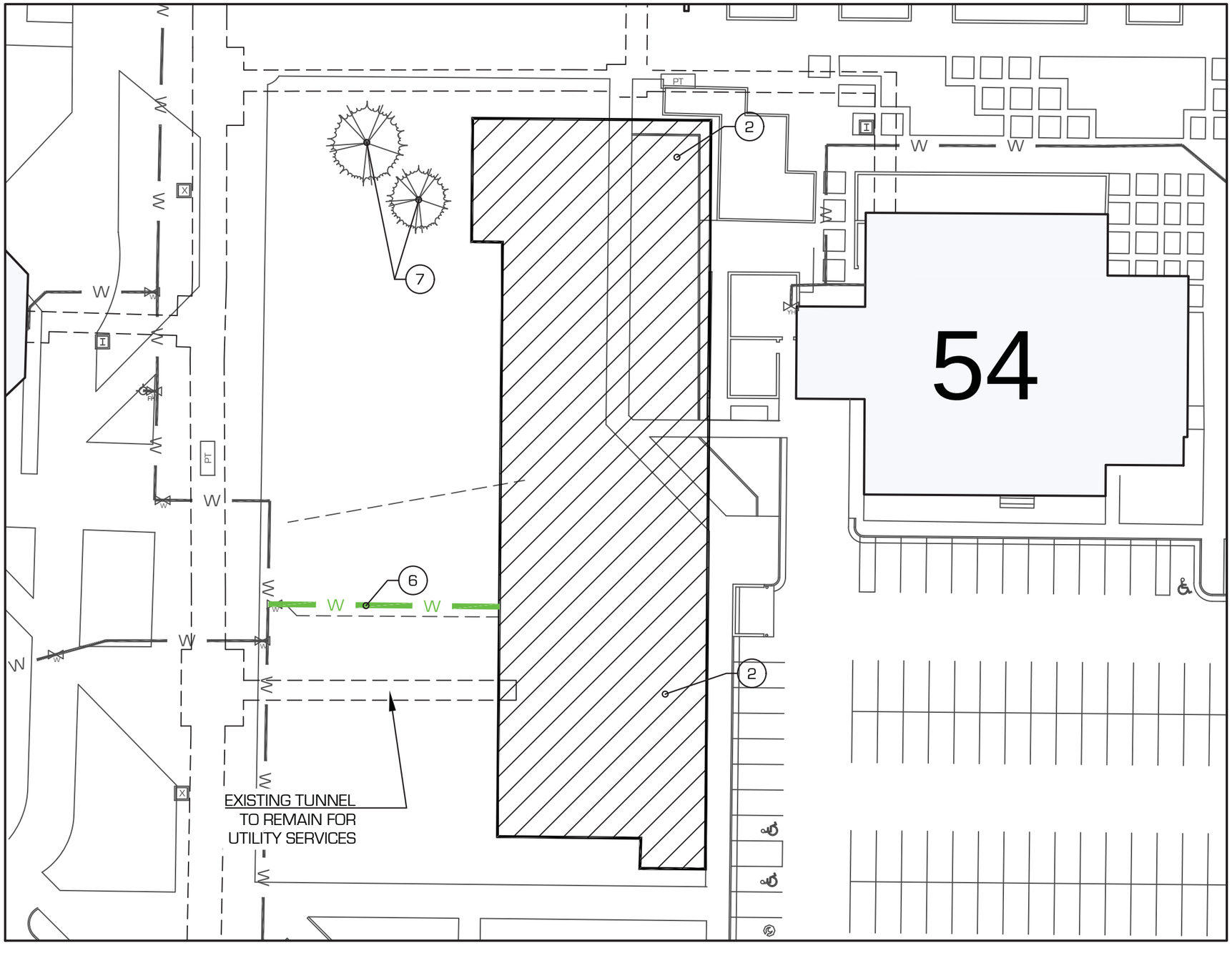

① SHEET KEY NOTES:

1. PROPOSED ADDITION TO THE BNR BUILDING.
2. PROPOSED BIOLOGY BUILDING.
3. PROPOSED LOCATION OF NEW GAS METER.
4. PROPOSED GAS LINE.
5. PROPOSED SEWER MANHOLE AND SEWER LINE.
6. PROPOSED WATER LINE.
7. EXISTING TREES TO BE RELOCATED ON SITE SUBJECT TO BUDGET REVIEW.
8. EXISTING TREES TO BE REMOVED.
9. STORM DRAIN INFRASTRUCTURE AND LINES TO BE RELOCATED.
10. INSTALL STORM DRAIN SUMP.
11. INSTALL STORM DRAIN BOX AND LINE.
12. EXISTING SEWER INFRASTRUCTURE TO BE REMOVED.
13. EXISTING WATER LINE TO REMAIN.
14. EXISTING SEWER LINE TO REMAIN.
15. EXISTING GAS LINE TO REMAIN.
16. EXISTING STORM DRAIN INFRASTRUCTURE TO REMAIN.

COLOR LEGEND:

EXISTING TO REMAIN

EXISTING TO BE REMOVED

PROPOSED

PROPOSED BIO BUILDING
WATER UTILITY PLAN
UTAH STATE UNIVERSITY

N

0 40' 80'

civilsolutionsgroup inc.

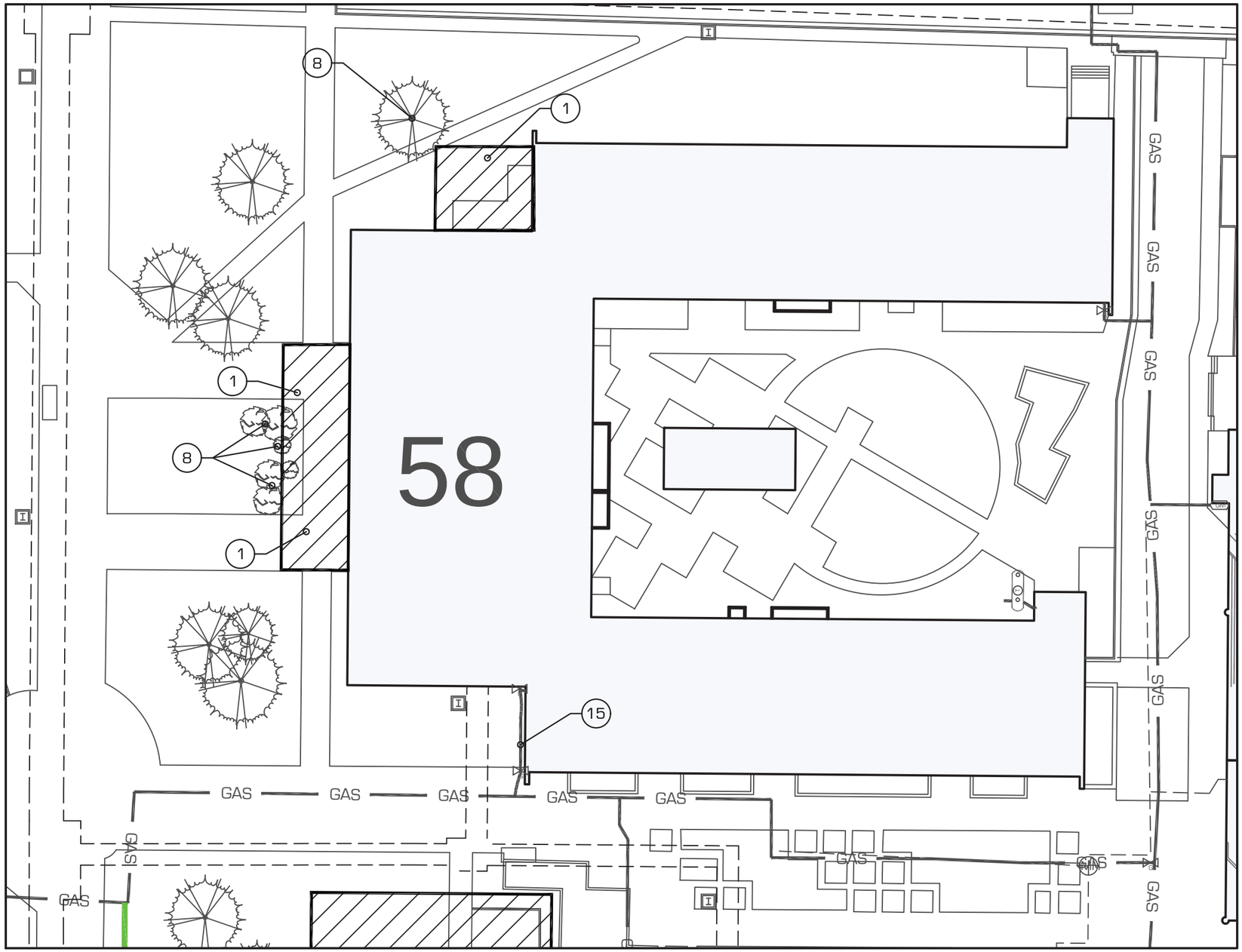

① SHEET KEY NOTES:

1. PROPOSED ADDITION TO THE BNR BUILDING.
2. PROPOSED BIOLOGY BUILDING.
3. PROPOSED LOCATION OF NEW GAS METER.
4. PROPOSED GAS LINE.
5. PROPOSED SEWER MANHOLE AND SEWER LINE.
6. PROPOSED WATER LINE.
7. EXISTING TREES TO BE RELOCATED ON SITE SUBJECT TO BUDGET REVIEW.
8. EXISTING TREES TO BE REMOVED.
9. STORM DRAIN INFRASTRUCTURE AND LINES TO BE RELOCATED.
10. INSTALL STORM DRAIN SUMP.
11. INSTALL STORM DRAIN BOX AND LINE.
12. EXISTING SEWER INFRASTRUCTURE TO BE REMOVED.
13. EXISTING WATER LINE TO REMAIN.
14. EXISTING SEWER LINE TO REMAIN.
15. EXISTING GAS LINE TO REMAIN.
16. EXISTING STORM DRAIN INFRASTRUCTURE TO REMAIN.

COLOR LEGEND:

EXISTING TO REMAIN

EXISTING TO BE REMOVED

PROPOSED

PROPOSED BNR BUILDING
GAS UTILITY PLAN
UTAH STATE UNIVERSITY

N

0 40' 80'

civilsolutionsgroup inc.

CRSA PAYETTE

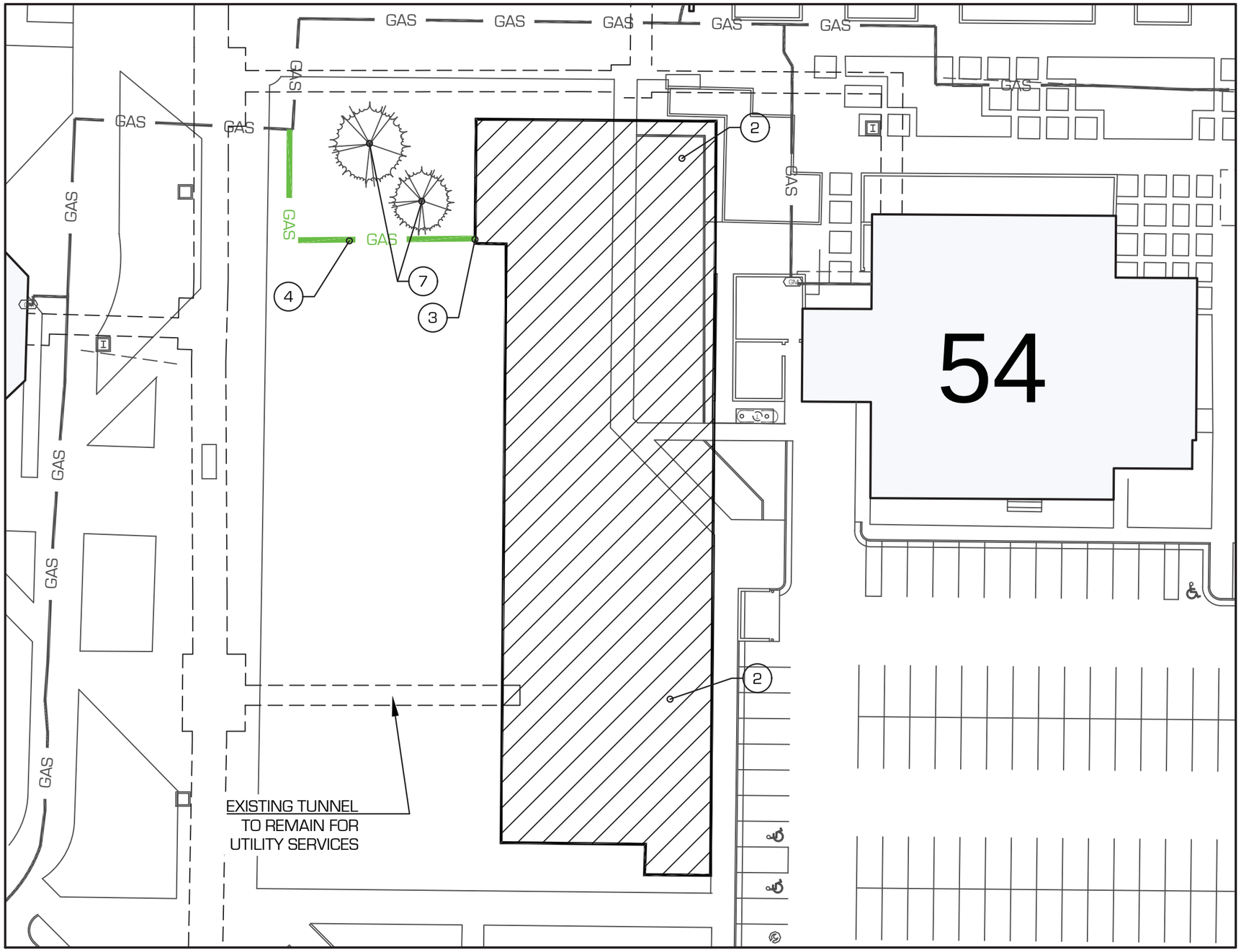

① SHEET KEY NOTES:

1. PROPOSED ADDITION TO THE BNR BUILDING.
2. PROPOSED BIOLOGY BUILDING.
3. PROPOSED LOCATION OF NEW GAS METER.
4. PROPOSED GAS LINE.
5. PROPOSED SEWER MANHOLE AND SEWER LINE.
6. PROPOSED WATER LINE.
7. EXISTING TREES TO BE RELOCATED ON SITE SUBJECT TO BUDGET REVIEW.
8. EXISTING TREES TO BE REMOVED.
9. STORM DRAIN INFRASTRUCTURE AND LINES TO BE RELOCATED.
10. INSTALL STORM DRAIN SUMP.
11. INSTALL STORM DRAIN BOX AND LINE.
12. EXISTING SEWER INFRASTRUCTURE TO BE REMOVED.
13. EXISTING WATER LINE TO REMAIN.
14. EXISTING SEWER LINE TO REMAIN.
15. EXISTING GAS LINE TO REMAIN.
16. EXISTING STORM DRAIN INFRASTRUCTURE TO REMAIN.

COLOR LEGEND:

EXISTING TO REMAIN

EXISTING TO BE REMOVED

PROPOSED

PROPOSED BIO BUILDING
GAS UTILITY PLAN
UTAH STATE UNIVERSITY

N

0 40' 80'

civilsolutionsgroup inc.

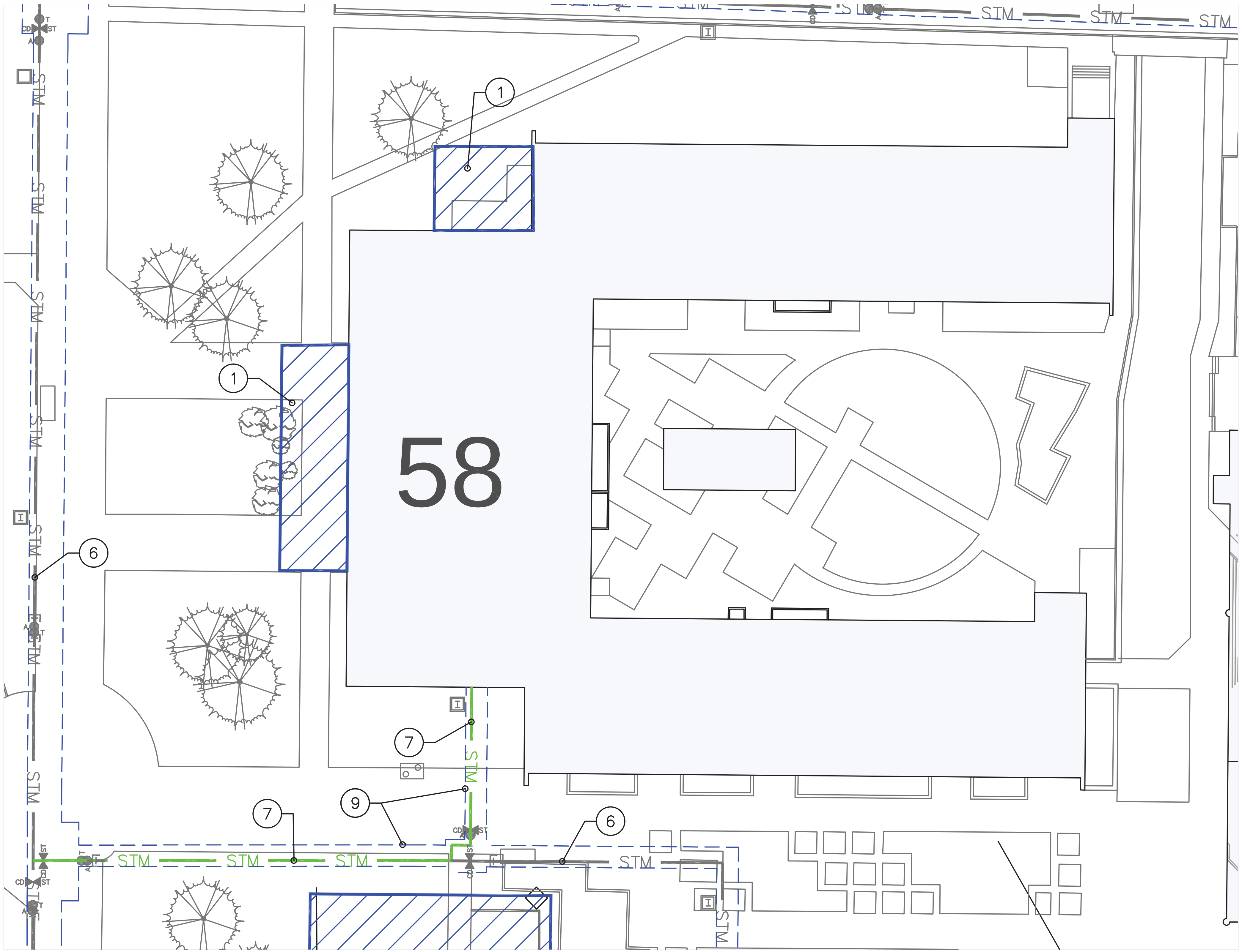

① SHEET KEY NOTES:

1. PROPOSED ADDITION TO THE BNR BUILDING.
2. PROPOSED BIOLOGY BUILDING.
3. EXISTING CHILLED WATER SUPPLY & RETURN PIPING WITHIN TUNNEL TO REMAIN.
4. PROPOSED CHILLED WATER SUPPLY & RETURN PIPING WITHIN TUNNEL TO NEW BIOLOGY BUILDING.
5. EXISTING CHWS & CHWR PIPING WITHIN TUNNEL TO BE REMOVED AND REPLACED.
6. EXISTING HIGH PRESSURE STEAM & CONDENSATE PIPING WITHIN TUNNEL TO REMAIN.
7. EXISTING HIGH PRESSURE STEAM & CONDENSATE PIPING WITHIN TUNNEL TO BE REMOVED AND REPLACED.
8. PROPOSED HIGH PRESSURE STEAM & CONDENSATE PIPING WITHIN TUNNEL TO NEW BIOLOGY BUILDING.
9. TUNNEL INFRASTRUCTURE WILL REQUIRE NO MODIFICATION OTHER THAN PIPING REPLACEMENT.

COLOR LEGEND:

EXISTING TO REMAIN

EXISTING TO BE REMOVED

PROPOSED

PROPOSED BNR BUILDING STEAM PIPING PLAN
UTAH STATE UNIVERSITY

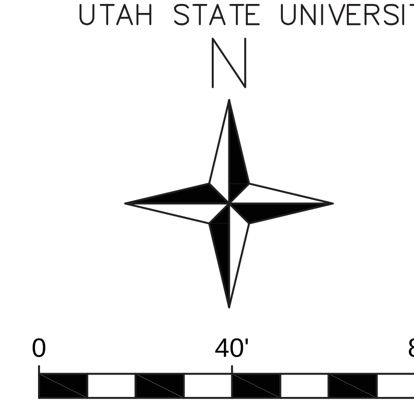

VAN BOERUM & FRANK ASSOCIATES, INC.
CONSULTING ENGINEERS

CRSA PAYETTE

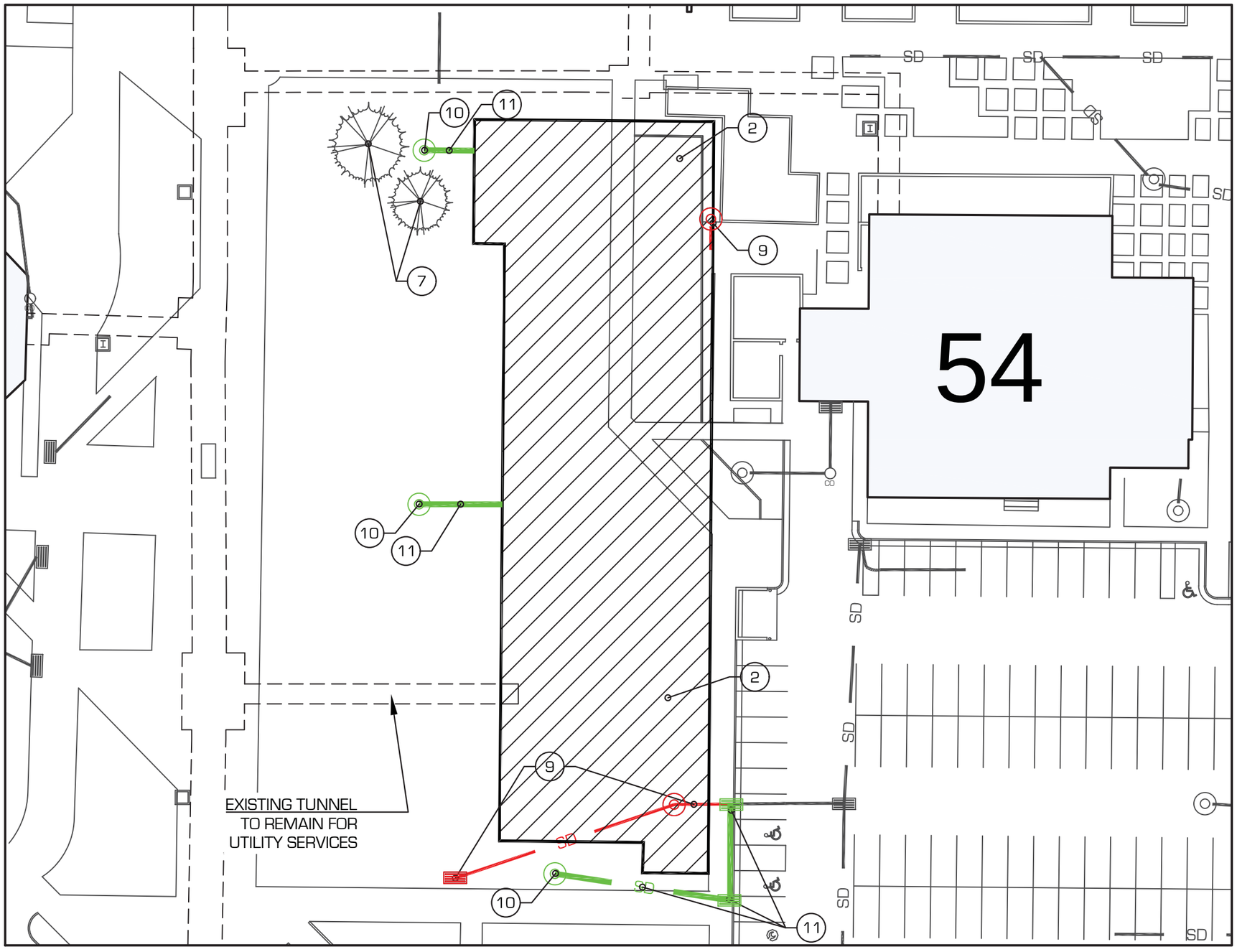

① SHEET KEY NOTES:

1. PROPOSED ADDITION TO THE BNR BUILDING.
2. PROPOSED BIOLOGY BUILDING.
3. PROPOSED LOCATION OF NEW GAS METER.
4. PROPOSED GAS LINE.
5. PROPOSED SEWER MANHOLE AND SEWER LINE.
6. PROPOSED WATER LINE.
7. EXISTING TREES TO BE RELOCATED ON SITE SUBJECT TO BUDGET REVIEW.
8. EXISTING TREES TO BE REMOVED.
9. STORM DRAIN INFRASTRUCTURE AND LINES TO BE RELOCATED.
10. INSTALL STORM DRAIN SUMP.
11. INSTALL STORM DRAIN BOX AND LINE.
12. EXISTING SEWER INFRASTRUCTURE TO BE REMOVED.
13. EXISTING WATER LINE TO REMAIN.
14. EXISTING SEWER LINE TO REMAIN.
15. EXISTING GAS LINE TO REMAIN.
16. EXISTING STORM DRAIN INFRASTRUCTURE TO REMAIN.

COLOR LEGEND:

EXISTING TO REMAIN

EXISTING TO BE REMOVED

PROPOSED

PROPOSED BIO BUILDING
STORM DRAIN UTILITY PLAN
UTAH STATE UNIVERSITY

N

0 40' 80'

civilsolutionsgroup inc.

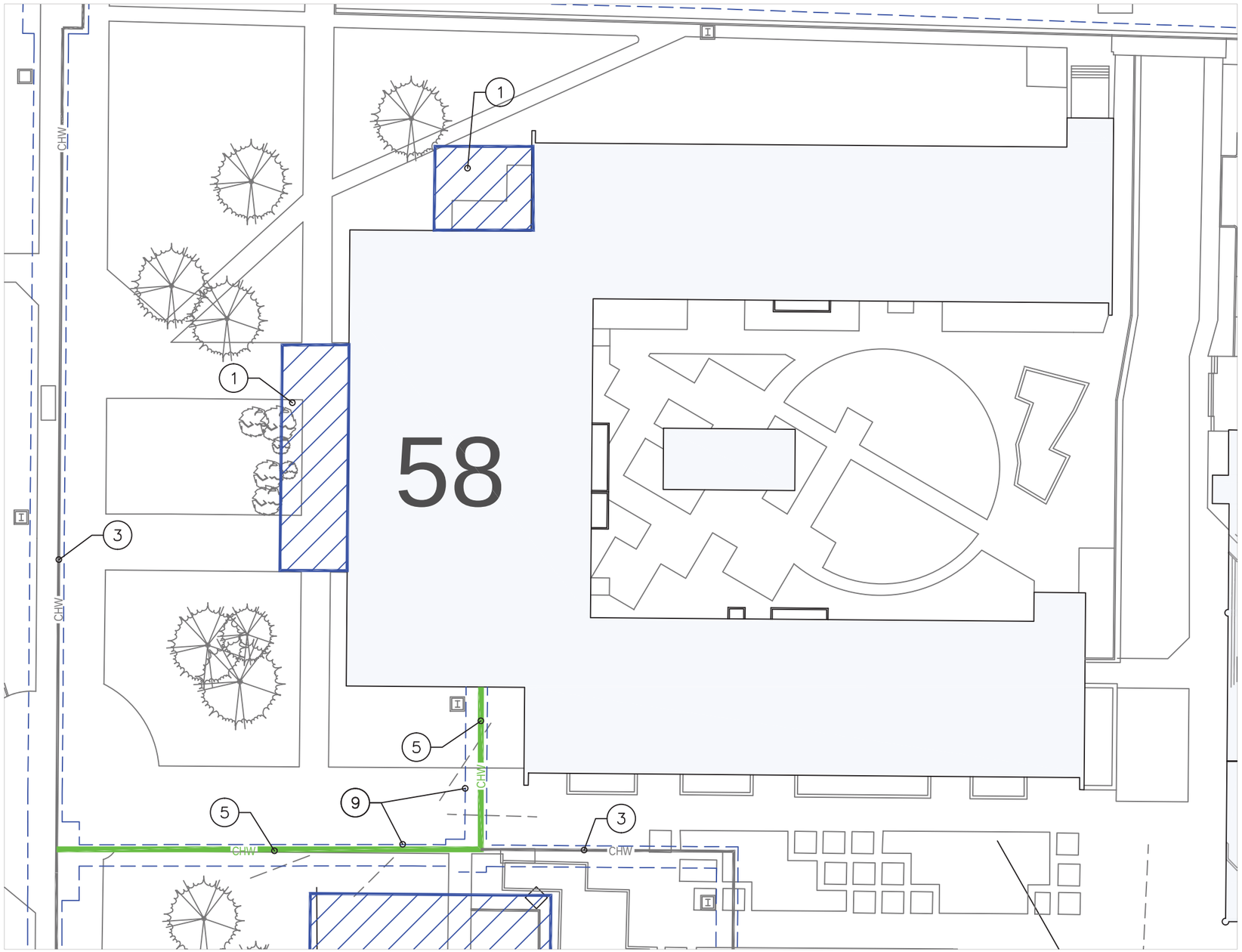

① SHEET KEY NOTES:

1. PROPOSED ADDITION TO THE BNR BUILDING.
2. PROPOSED BIOLOGY BUILDING.
3. EXISTING CHILLED WATER SUPPLY & RETURN PIPING WITHIN TUNNEL TO REMAIN.
4. PROPOSED CHILLED WATER SUPPLY & RETURN PIPING WITHIN TUNNEL TO NEW BIOLOGY BUILDING.
5. EXISTING CHWS & CHWR PIPING WITHIN TUNNEL TO BE REMOVED AND REPLACED.
6. EXISTING HIGH PRESSURE STEAM & CONDENSATE PIPING WITHIN TUNNEL TO REMAIN.
7. EXISTING HIGH PRESSURE STEAM & CONDENSATE PIPING WITHIN TUNNEL TO BE REMOVED AND REPLACED.
8. PROPOSED HIGH PRESSURE STEAM & CONDENSATE PIPING WITHIN TUNNEL TO NEW BIOLOGY BUILDING.
9. TUNNEL INFRASTRUCTURE WILL REQUIRE NO MODIFICATION OTHER THAN PIPING REPLACEMENT.

COLOR LEGEND:

EXISTING TO REMAIN

EXISTING TO BE REMOVED

PROPOSED

PROPOSED BNR BUILDING
CHILLED WATER PLAN
UTAH STATE UNIVERSITY

N

0 40' 80'

VAN BOERUM & FRANK ASSOCIATES, INC.
CONSULTING ENGINEERS
WWW.VBFA.COM

CRSA PAYETTE

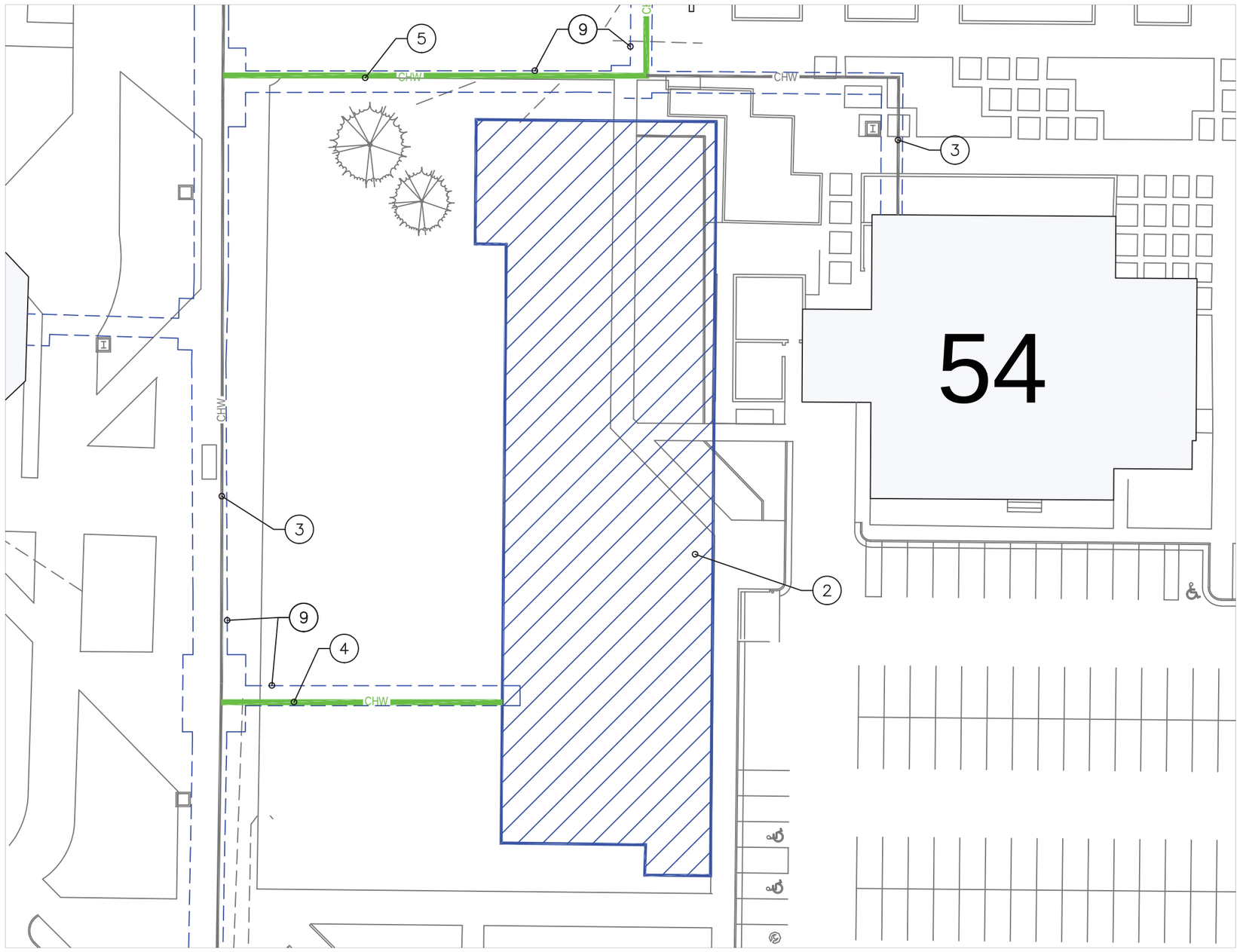

① SHEET KEY NOTES:

1. PROPOSED ADDITION TO THE BNR BUILDING.
2. PROPOSED BIOLOGY BUILDING.
3. EXISTING CHILLED WATER SUPPLY & RETURN PIPING WITHIN TUNNEL TO REMAIN.
4. PROPOSED CHILLED WATER SUPPLY & RETURN PIPING WITHIN TUNNEL TO NEW BIOLOGY BUILDING.
5. EXISTING CHWS & CHWR PIPING WITHIN TUNNEL TO BE REMOVED AND REPLACED.
6. EXISTING HIGH PRESSURE STEAM & CONDENSATE PIPING WITHIN TUNNEL TO REMAIN.
7. EXISTING HIGH PRESSURE STEAM & CONDENSATE PIPING WITHIN TUNNEL TO BE REMOVED AND REPLACED.
8. PROPOSED HIGH PRESSURE STEAM & CONDENSATE PIPING WITHIN TUNNEL TO NEW BIOLOGY BUILDING.
9. TUNNEL INFRASTRUCTURE WILL REQUIRE NO MODIFICATION OTHER THAN PIPING REPLACEMENT.

COLOR LEGEND:

EXISTING TO REMAIN

EXISTING TO BE REMOVED

PROPOSED

PROPOSED BIO BUILDING
CHILLED WATER PLAN
UTAH STATE UNIVERSITY

N

0 40' 80'

VAN BOERUM & FRANK ASSOCIATES, INC.
CONSULTING ENGINEERS
WWW.VBFA.COM

CRSA PAYETTE

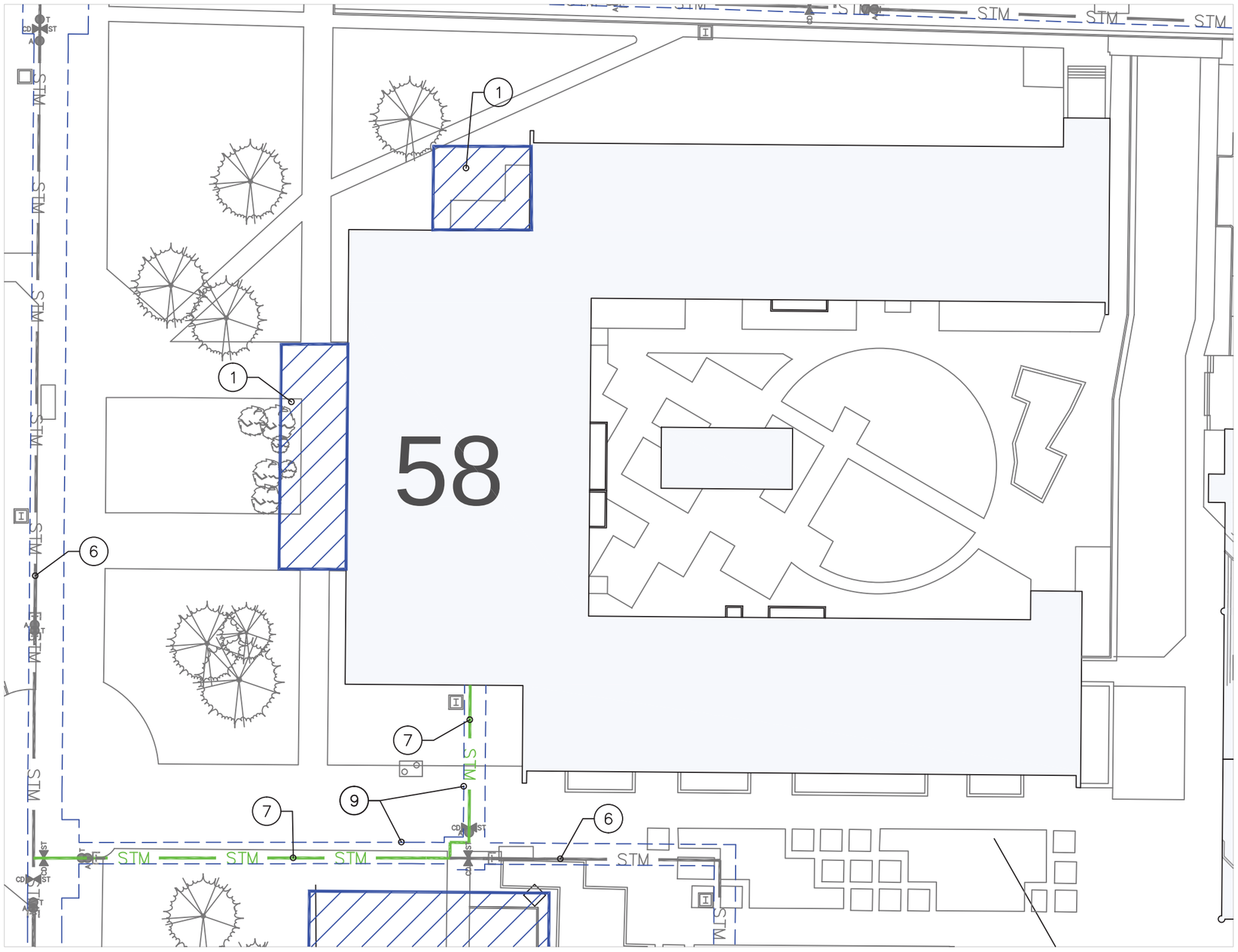

① SHEET KEY NOTES:

1. PROPOSED ADDITION TO THE BNR BUILDING.
2. PROPOSED BIOLOGY BUILDING.
3. EXISTING CHILLED WATER SUPPLY & RETURN PIPING WITHIN TUNNEL TO REMAIN.
4. PROPOSED CHILLED WATER SUPPLY & RETURN PIPING WITHIN TUNNEL TO NEW BIOLOGY BUILDING.
5. EXISTING CHWS & CHWR PIPING WITHIN TUNNEL TO BE REMOVED AND REPLACED.
6. EXISTING HIGH PRESSURE STEAM & CONDENSATE PIPING WITHIN TUNNEL TO REMAIN.
7. EXISTING HIGH PRESSURE STEAM & CONDENSATE PIPING WITHIN TUNNEL TO BE REMOVED AND REPLACED.
8. PROPOSED HIGH PRESSURE STEAM & CONDENSATE PIPING WITHIN TUNNEL TO NEW BIOLOGY BUILDING.
9. TUNNEL INFRASTRUCTURE WILL REQUIRE NO MODIFICATION OTHER THAN PIPING REPLACEMENT.

COLOR LEGEND:

EXISTING TO REMAIN

EXISTING TO BE REMOVED

PROPOSED

PROPOSED BNR BUILDING
STEAM PIPING PLAN
UTAH STATE UNIVERSITY

N

0 40' 80'

VAN BOERUM & FRANK ASSOCIATES, INC.
CONSULTING ENGINEERS
WWW.VBFA.COM

CRSA PAYETTE

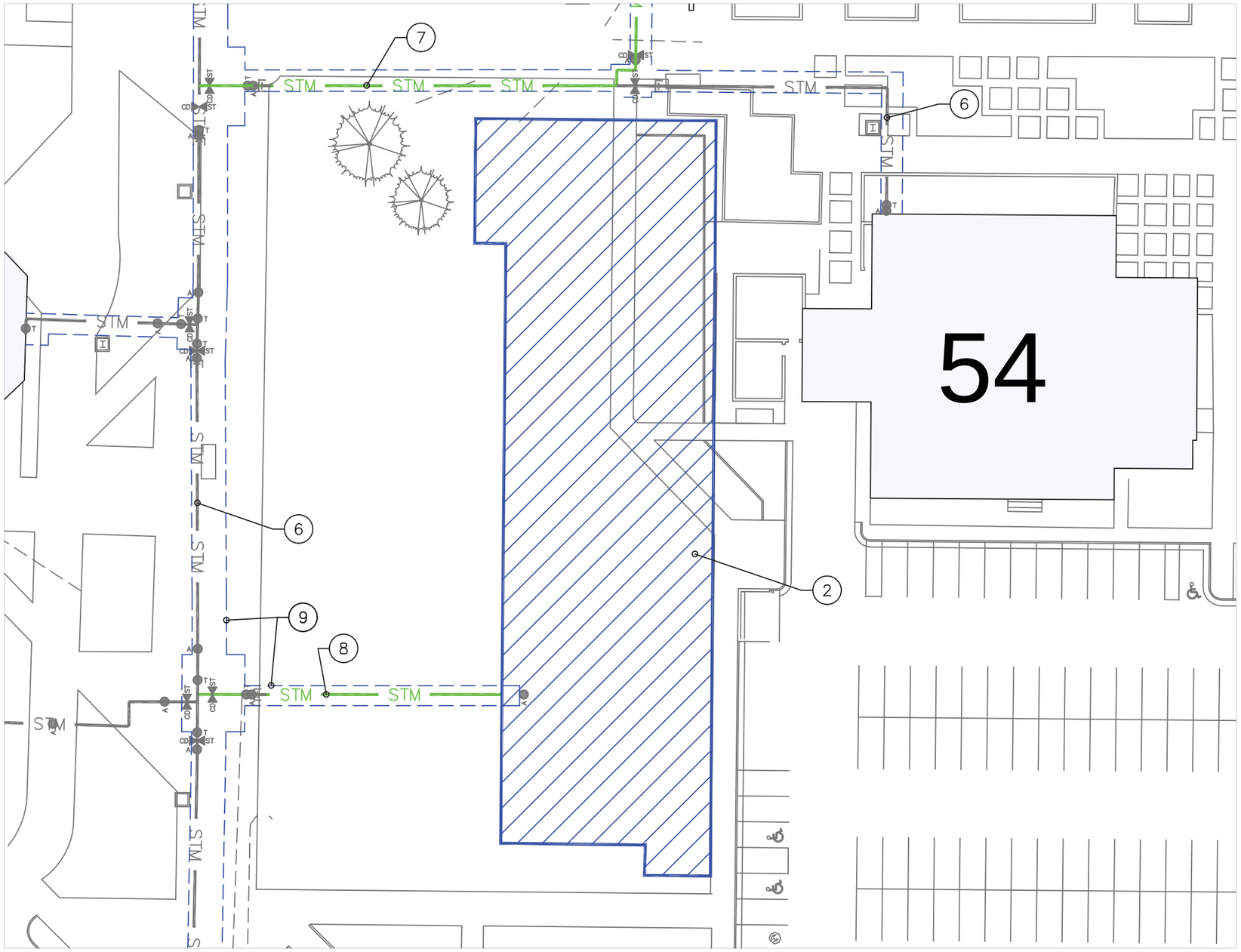

① SHEET KEY NOTES:

1. PROPOSED ADDITION TO THE BNR BUILDING.
2. PROPOSED BIOLOGY BUILDING.
3. EXISTING CHILLED WATER SUPPLY & RETURN PIPING WITHIN TUNNEL TO REMAIN.
4. PROPOSED CHILLED WATER SUPPLY & RETURN PIPING WITHIN TUNNEL TO NEW BIOLOGY BUILDING.
5. EXISTING CHWS & CHWR PIPING WITHIN TUNNEL TO BE REMOVED AND REPLACED.
6. EXISTING HIGH PRESSURE STEAM & CONDENSATE PIPING WITHIN TUNNEL TO REMAIN.
7. EXISTING HIGH PRESSURE STEAM & CONDENSATE PIPING WITHIN TUNNEL TO BE REMOVED AND REPLACED.
8. PROPOSED HIGH PRESSURE STEAM & CONDENSATE PIPING WITHIN TUNNEL TO NEW BIOLOGY BUILDING.
9. TUNNEL INFRASTRUCTURE WILL REQUIRE NO MODIFICATION OTHER THAN PIPING REPLACEMENT.

COLOR LEGEND:

EXISTING TO REMAIN

EXISTING TO BE REMOVED

PROPOSED

PROPOSED BIO BUILDING
STEAM PIPING PLAN
UTAH STATE UNIVERSITY

N

0 40' 80'

VAN BOERUM & FRANK ASSOCIATES, INC.
CONSULTING ENGINEERS
WWW.VBFA.COM

CRSA PAYETTE

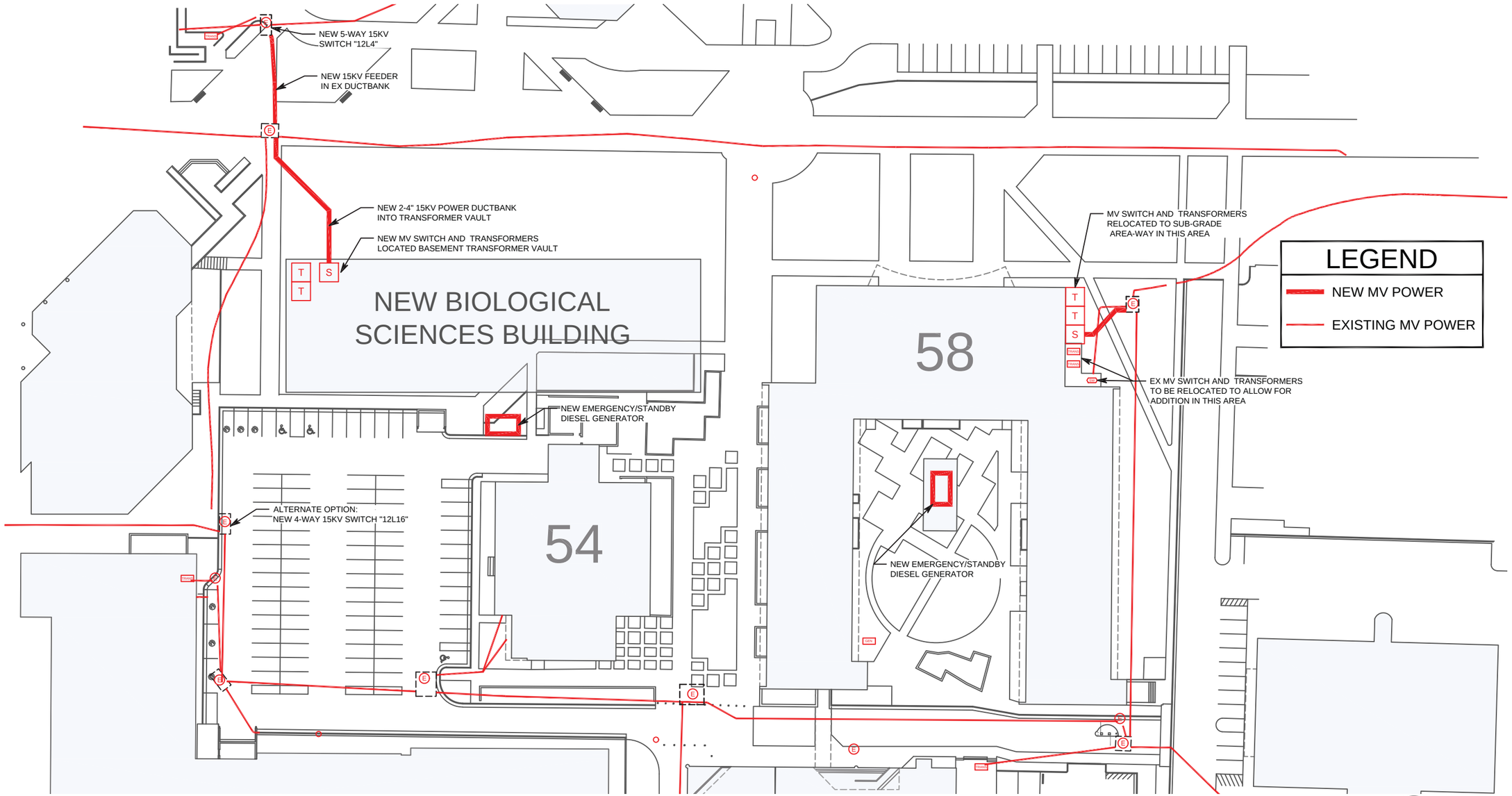

SITE 12.5KV POWER CONCEPTUAL PLAN

CRSA PAYETTE

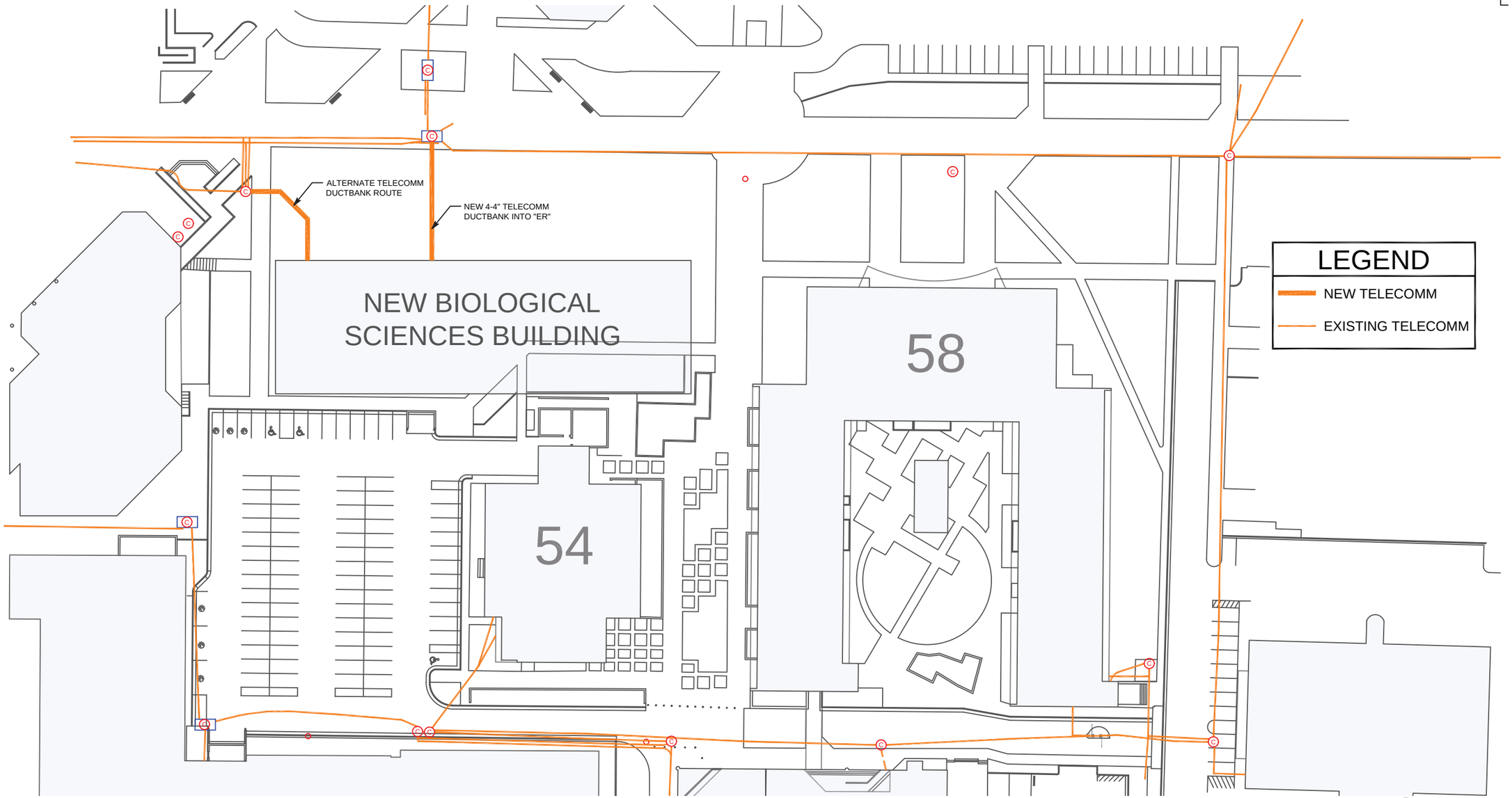

SITE COMMUNICATIONS CONCEPTUAL PLAN

NORTH

Blank Page

PROGRAM OVERVIEW

3.1 Summary of Programming Process

A Steering Committee was established to provide overview to the programming and planning process. The committee comprised USU Facilities representatives, senior level (Dean, Associate Dean, Department Chair) user representatives and an Executive Vice Provost. Initial meetings were conducted to discuss project drivers and priorities, especially in light of the new direction to an instructional facility. Members of the steering committee also reviewed the teaching lab needs in further depth to establish a list of proposed labs that would adequately provide for current and anticipated curriculum.

Concurrent with the initial meetings, the design team toured the majority of existing Biology spaces as well as many of the QCNR spaces to get an overall understanding of the current condition of the facilities and hear observations from various occupants in the spaces. This was followed by multiple rounds of interviews with individual faculty members and selected staff over a period of four to five months to gather detailed information on the functional and spatial requirements for each proposed space in the building. Needs were discussed starting at a general level, but then became more precisely defined as the design team developed room diagrams for review and discussion in the later rounds of meetings.

Some spaces in addition to ones documented in the final program were requested for inclusion in the project by the College of Natural Resources and by the University (registrar classrooms) during the programming process. These spaces cannot be accommodated as part of the current project due to budget constraints. However, a list of those spaces is included in the Section 3.2.2 Requested Program for future reference.

3.2 Space Inventory

3.2.1 Existing Program

The programming effort consisted of planning for two Colleges, the College of Science and the Quinney College of Natural Resources (QCNR), and their long-range growth and development goals. The two Colleges both utilize multiple buildings near the core of the USU campus. Work specifically focused on assessing the BNR Building's capacity to manage facilities upgrades for both projects. In addition, the project reviewed programming goals and project requests to understand which programs may best fit into the new Biological Sciences Building. As the list of project requests was limited for the QCNR, the programming effort focused a larger effort on assessing existing conditions and understanding how departmental goals could be applied to the BNR Renovation and Addition and the new Biological Sciences Building.

The Department of Biology is currently housed in over five facilities, most primarily the BNR Building, VSB Building, Geology Building, BioTech/CIB Building and USTAR with a summary of space use as follows:

	Net Square Footage (NSF)
Geology Building (GEO)	5,293
Greenhouse	3,763
Classlab / Lab Support	1,531
Veterinary Science and Bacteriology Building (VSB)	14,615
Office / Administrative Support	7,657
Classlab / Lab Support	6,958
Biotechnology Center / CIB Building (BTEC)	3,091
Office / Administrative Support	112
Classlab / Lab Support	2,979
Biology and Natural Resources Building (BNR)	47,902
Administration / Conference	2,076
Advising	697
Office	8,242
Research Lab / Lab Support	22,751
Classroom / Classlab	7,628
Collections	3,762
Junction (JCTN)	5,786
Collections / Support	5,786
USTAR	552
Classlab / Lab Support	552

The QCNR occupies a little less than half of the Biology and Natural Resources Building (BNR) and the adjacent structures. Space primarily consists of academic offices, labs and lab support space. The College of Natural Resources made some specific space requests, thus the programming team did not do a full space use analysis for QCNR.

3.2.2 Requested Program

The new Biological Sciences Building and BNR Renovation / Addition is anticipated to accommodate many of the program changes for the Department of Biology and a number of the planning requests of the QCNR. The objective is to consolidate as much of the Biology program into these two facilities to facilitate collaboration and interaction among students, faculty and college administration. The ideal facilities would accommodate all of the Department's space and functions in renovated space. However, due to the finite resources available for this project, functions have been prioritized to identify essential functions, other less crucial for direct inclusion in the project and those that can remain in their existing location without immediate upgrade or replacement.

Over the decades the Department of Biology has been housed in the BNR Building, a great deal of renovation has occurred, resulting in a general disparity in quantity and quality of the spaces used by various programs and faculty. An effort was made as part of this study to identify general types, categories and quantities of space required per researcher and per student, so a broad perspective could be obtained for new and renovated building planning purposes. Spaces with necessarily specialized functions were maintained. Department of Biology goals for consolidation, modern teaching and research facilities, support spaces and space to support broader collaboration between the departments and colleges has been included in the program document. The Department of Biology made specific requests for teaching lab space to accommodate the growth of students and programs, research lab and lab support space to accommodate faculty projections.

QCNR made specific requests for renovations within the BNR Building and new space to accommodate academic instruction space needs. The requests were:

- Priority 1A - Upgrade mechanical systems and insulate the building skin to increase comfort and match the NR Building.
- Priority 1B - Create an expanded lobby/atrium on the west façade of the BNR building.
- Priority 2A – One 60-seat GIS Teaching Lab that is computer heavy. Funded by Juniper Systems. QCNR has received financial support for construction plus the equipment costs. This could occur in either BNR or the new building.
- Priority 2B – One 20-seat Hydrology Teaching Lab. Needs 40 foot flume. Funded by Campbell Scientific. QCNR has received financial support for construction plus the equipment costs. This could occur in either BNR or the new building.
- Priority 3 – Five research labs listed (GIS, Plant Analysis, Wildlife Ecology, Aquatic Ecology and Social-Economic Modeling). This is a space request not a renovation request – i.e. if Biology could free up approximately 10,000 sf CNR would take the space and fund the renovation out of pocket over time.
- Priority 4 – seven new faculty offices and two small classrooms (~800 sf)

The project also includes 7,500 nsf of general academic instruction space in the new Biological Sciences Building. The Academic and Instructional Services Executive Vice Provost helped facilitate USU's general and department/college space needs and technology resource requirements.

This program document also addresses a broader need for additional academic instruction space, which may be able to be accommodated in vacated space in VSB under a separate project budget and contract (see Appendix Section 6.5).

3.2.3 Proposed Program

The proposed program contains the following components:

- Biology teaching laboratories with dedicated preparation spaces
- Hydrology and GIS teaching labs for QCNR
- Biology research laboratories with associated service and support spaces
- Plant Pest Diagnostic Lab
- Collection space for plant, insect and vertebrate specimens
- One 350-person auditorium with tablet-arm seats and one 115-person tiered active learning classroom with a combination of fixed tables and movable tables and chairs
- Faculty, adjunct/emeriti and staff offices
- Graduate student work spaces
- Department office suite
- Conference rooms
- Student advisement suite
- Building support spaces
- Lobby addition to BNR west wing and lobby in new building with areas for "science on display"
- Informal and formal gathering, meeting and student study spaces of varying sizes, to encourage continued collaboration outside of the formal teaching and research environments

The project will consolidate most, but not all current Biology space into a new Biological Sciences Building and BNR. Research space currently in use by one faculty researcher in BTEC will remain, and additional unoccupied research lab space is anticipated to be accommodate an additional faculty researcher. The teaching lab in the Geology Building will remain as available space for the near term and the existing greenhouse will not be relocated or altered. Some researchers now in VSB may remain in place, but eventually all of the Biology space there is planned to be vacated for occupancy by other departments or program areas. The program totals approximately 95,700 nsf, with 56,300 nsf housed in the new building and 39,400 nsf in BNR. In the BNR allocation, approximately 34,100 nsf is planned to be in renovated space, while 5,300 nsf remains in un-renovated space.

A detailed list of the spaces proposed for the overall project follows, along with a graphic program where all of the spaces are represented by separate "boxes" in proportion to one another. Adjacency diagrams are also included, showing the desired groupings for different program components as identified during the planning process.

Proposed Space Program

SPACE #	SPACE NAME	CURRENT TARGET: NUMBER OF SPACES	CURRENT TARGET: TARGET NET ROOM SIZE (NSF)	CURRENT TARGET: TOTAL NSF	NSF in **New Building**	NSF in **BNR renovated** space	NSF in **BNR unrenovated** space	NOTES / DECISION LOG *additional information on room data sheets*
TOTALS				**95,685**	**56,285**	**34,090**	**5,310**	
		GSF @ 55% N/G:		173,973	102,336	61,982	9,655	
01 Department Administration								
1.1 Administrative					**NEW**	**BNR (ren)**	**BNR (exg)**	
1.1.1	Department Head Office	1	180	180		180		office with small meeting area
1.1.2	Department Reception	1	100	100		100		recp area with 2 seats
1.1.3	Administrative Staff	2	80	160		160		open office, transaction counter
1.1.4	Administrative Staff Office	6	120	720		720		Kami McNiel, Nancy Kay Pierson, Monica Schruhl, Mike
1.1.5	IT Staff Office	1	120	120		120		VSB 223
	Subtotal 1 Administrative	11		1,280	-	1,280		
1.2 Administrative Support								
1.2.1	Conference Room, Large	1	840	840		840		60-seat, view desired
1.2.2	Conference Room, Small	1	410	410	410			25-seat, house thesis/disertation library
1.2.3	Department Break Room	2	180	360	180	180		
1.2.4	Copy / Mail / Workroom	2	180	360	180	180		One per building: copy, mail, preparation area and department supplies/paper storage
1.2.5	Department Storage Room	1	120	120		120		
1.2.6	IT Workroom	1	120	120		120		VSB 229
	Subtotal 2 Administrative Support	8		2,210	770	1,440		
Subtotal 01 Department Administration		**19**		**3,490**	**770**	**2,720**		
02 Department Advising Center								
2.1 Department Advising Center					**NEW**	**BNR (ren)**	**BNR (exg)**	
2.1.1	Advising Center Reception	1	210	210	210			4 recp seats, 2 stud computers, 1 peer plus visitor
2.1.2	Director of UG Studies Office	1	120	120	120			
2.1.3	Biology Adviser	1	120	120	120			
2.1.4	Academic Advising Staff	1	120	120	120			open office, adj to 2.1.1
	Subtotal 1 Department Advising Center	4		570	570			
Subtotal 02 Department Advising Center		**4**		**570**	**570**			
03 Extension								
3.1 Plant Pest Diagnostic Lab					**NEW**	**BNR (ren)**	**BNR (exg)**	See Appendix 6.5 for Room Data Sheet
3.1.1	Reception	1	120	120			120	Space for delivery of samples
3.1.2	Research Lab	1	300	300			300	
3.1.3	Microscope Room	1	80	80			80	
3.1.4	Staff Work Area	1	420	420			420	6 workstations in open area + shared alcove, 2 staff
3.1.5	Office	2	90	180			180	Individual FTE staff office
	Subtotal 1 Extension	1		1,100			1,100	
Subtotal 03 Extension		**1**		**1,100**			**1,100**	
04 Office | Support								
4.1 Office					**NEW**	**BNR (ren)**	**BNR (exg)**	
4.1.1	Faculty Office	34	120	4,080	1,680	2,400		New Building: 14 BNR renovated: 20 office with peninsula to support meetings
4.1.2	Adjunct / Visiting Office	10	120	1,200	240	960		New Building: 2 BNR renovated: 8 (includes USDA Bee Lab offices) office with peninsula to support meetings
4.1.3	Emeritus | Post Doc Office	2	120	240		240		2 per room
4.1.4	Graduate Assistant Office	8	415	3,320	2,075	1,245		New Building: 5, BNR renovation: 3 7 students per room, total of 56 grad students
4.1.4A	Data Processing Space (3PI)	3	incl. in 4.1.4					
4.1.4B	Data Processing Space (2PI)	1	incl. in 4.1.4					
	Subtotal 1 Office	58		8,840	3,995	4,845	-	

SPACE #	SPACE NAME	CURRENT TARGET NUMBER OF SPACES	CURRENT TARGET TARGET NET ROOM SIZE (NSF)	CURRENT TARGET TOTAL NSF	NSF in **New Building**	NSF in **BNR renovated** space	NSF in **BNR unrenovated** space	NOTES / DECISION LOG *additional information on room data sheets*
4.2 Support								
4.2.1	Group Study - Small	12	120	1,440	960	480		5 person; New Building: 8, BNR renovated: 4
4.2.2	Group Study - Large	6	240	1,440	960	480		8 person; New Building: 4, BNR renovated: 2
4.2.3	Informal Open Student Lounge/Study	6	175	1,050	700	350		8 person; New Building: 4, BNR renovated: 2
4.2.4	Biology Tutoring Room - Large	1	660	660			660	30 seats, BNR 111 Human Anatomy Study Room
4.2.5	Tutoring Room - Small	1	320	320		320		Room for 10 students, close to teaching labs (current VSB 219A near Human Physiology)
4.2.6	Lobby / Poster Session Pinup	1	1,200	1,200	1,200			Prefer placement in Lobby
4.2.7	BNR Lobby Addition	1	2,000	2,000		2,000		
	Subtotal 2 Support	28		8,110	3,820	3,630	660	
Subtotal 04 Office | Support		**86**		**16,950**	**7,815**	**8,475**	**660**	
05 Research Laboratories								
5.1 Research Laboratories					**NEW**	**BNR (ren)**	**BNR (exg)**	
5.1	Faculty Research Lab and Support (5.1.1 - 5.1.8 lab suites)	23	850	19,550	9,350	7,650	2,550	New bldg: 11 faculty labs BNR renovated: 9 faculty labs BNR unrenovated: 3 faculty labs Typical 3-researcher suites (2,550 nsf each), support rooms included in suite
5.1.1A	Open lab bench area	1		incl. in 5.1				
5.1.2A	Open lab bench area	1		incl. in 5.1				
5.1.2B	Microscope Room	1		incl. in 5.1				
5.1.2C	HPLC Room	1		incl. in 5.1				
5.1.2D	Radioisotope Room	1		incl. in 5.1				
5.1.2E	Support Room	1		incl. in 5.1				
5.1.3A	Open lab bench area	1		incl. in 5.1				
5.1.3B	Balance Room	1		incl. in 5.1				
5.1.3C	Insect Rearing Room	1		incl. in 5.1				
5.1.3D	Plant Growth Room	2		incl. in 5.1				
5.1.4A	Open lab bench area	1		incl. in 5.1				
5.1.4B	Environmental Room/Clean Work Space	1		incl. in 5.1				
5.1.4C	Glassware Wash Room	1		incl. in 5.1				
5.1.4D	Dirty Sample Processing Room	1		incl. in 5.1				
5.1.4E	Mass Spec Room	1		incl. in 5.1				
5.1.5A	Open lab bench area	1		incl. in 5.1				
5.1.5B	RNA Room	1		incl. in 5.1				
5.1.5C	DNA Extraction Room	1		incl. in 5.1				
5.1.6A	Open lab bench area	1		incl. in 5.1				
5.1.6B	HPLC Room	1		incl. in 5.1				
5.1.6C	Microscope Room	1		incl. in 5.1				
5.1.7A	Open lab bench area	1		incl. in 5.1				
5.1.7B	Post-PCR Room	1		incl. in 5.1				
5.1.7C	RNA Room	1		incl. in 5.1				
5.1.7D	Insect Rearing Room	1		incl. in 5.1				
5.1.8A	Open lab bench area	1		incl. in 5.1				
5.1.8B	Equipment Alcove	1		incl. in 5.1				
5.1.8C	Sterile Work Room	1		incl. in 5.1				
5.1.9	Computational Lab	2	500	1,000			1,000	See Appendix 6.5 for Room Data Sheet
	Subtotal 1 Research Lab and Support	25		20,550	9,350	7,650	3,550	
5.2 Research Support (shared in-lab)								
5.2.1	Lab Entry/Support	14		incl. in 5.1				Can also be assigned as grad students desks
5.2.2	Fume Hood Alcove	8		incl. in 5.1				
5.2.3	Work Room	11		incl. in 5.1				
5.2.4	Small Meeting Room	11		incl. in 5.1				New Building: 8 BNR renovation: 3
	Subtotal 2 Research Support	33		incl. in 5.1				

SPACE #	SPACE NAME	CURRENT TARGET NUMBER OF SPACES	CURRENT TARGET TARGET NET ROOM SIZE (NSF)	CURRENT TARGET TOTAL NSF	NSF in **New Building**	NSF in **BNR renovated** space	NSF in **BNR unrenovated** space	NOTES / DECISION LOG *additional information on room data sheets*
5.3 Common Laboratory Support								
5.3.1	Controlled Temperature (Cold) Rooms	4	100	400	300	100		New Building: 3, BNR renovation: 1
5.3.2	Growth Chambers	4	180	720	360	360		New Building: 2, BNR renovation: 2
5.3.3	Freezer Farm - large	1	540	540	540			
5.3.4	Freezer Farm - small	1	270	270		270		
5.3.5	Autoclave / Ice	2	300	600	300	300		New Building: 1, BNR renovation: 1
5.3.6	Field Equipment Storage (Research)	1	300	300		300		
5.3.7	Common Support Room - Large	1	600	600	600			
5.3.8	Common Support Room - Small	4	300	1,200	300	900		New Building: 1, BNR renovation: 3
5.3.9	BSL 2 Lab	1	600	600	600			
5.3.10	Animal Holding	1	1,500	1,500		1,500		
	Subtotal 2 Common Laboratory Support	20		6,730	3,000	3,730		
Subtotal 05 Research Laboratories		**45**		**27,280**	**12,350**	**11,380**	**3,550**	
06 Teaching Laboratories								
6.1 Teaching Laboratories					**NEW**	**BNR (ren)**	**BNR (exg)**	
6.1.1	General Biology / Non-Majors Biology	4	1,250	5,000	5,000			24 students
6.1.2	Advanced Physiology / Behavior	1	1,560	1,560	1,560			24 students, includes Prep/storage/demo area within lab
6.1.3	Human Physiology	1	1,250	1,250		1,250		24 students, no prep room required, replace VSB 219
6.1.4	Microbiology Class Laboratory	2	1,250	2,500	2,500			24 students, replace VSB 232 & 236
6.1.5	Cell / Mol. Bio. / Genetics	1	1,250	1,250	1,250			24 students
6.1.6	Public Health	1	1,560	1,560	1,560			24 students, includes equipment room within lab
6.1.7	Plants/Insect Collection Teaching Lab	1	1,250	1,250	1,250			24 students
6.1.8	Vertebrate / Zoology Collections Teaching Lab	1	1,250	1,250		1,250		24 students; Prep included in adjoining Vertebrate Collections space
6.1.9	*Mortui Vivos Docent* (Cadaver Lab)	1	1,100	1,100		1,100		8 cadaver tables
6.1.10	Human Anatomy	1	960	960		960		24 seats
6.1.11	Ecology	1	1,560	1,560	1,560			24 seats, includes prep/support area within lab
6.1.12	CNR Hydrology Teaching Lab	1	1,660	1,660		1,660		24 stations at tables; up to 30 students in class
6.1.13	CNR GIS Teaching Lab	1	2,400	2,400	2,400			60-seats; movable partition to divide into (2) 30-person rooms
	Subtotal 1 Teaching Laboratories	17		23,300	17,080	6,220		
6.2 Teaching Laboratory Support - Prep and storage								
6.2.1	General Bio Prep	1	930	930	930			
6.2.2	Microbiology - Prep / Media Preparation	1	615	615	615			Teaching prep - media prep for research in common lab support
6.2.3	Microbiology - Media Prep Storage	1	615	615	615			Teaching prep - media prep for research in common lab support
6.2.4	Microbiology - Cold Room / Storage	1	100	100	100			
6.2.5	Prep - Cell / Mol. Bio. / Genetics	1	300	300	300			
6.2.6	Human Physiology - Cold Room Shared	1	100	100		100		
6.2.7	Specimen Storage - Plant/Insect	1	300	300	300			Supports Plant/Insect Collection Teaching Lab, include counter and sink
6.2.8	Field Equipment Storage (Teaching)	1	150	150		150		
6.2.9	General Equipment Storage	1	300	300		300		
	Subtotal 2 Teaching Lab Support - prep/storage	21		3,410	2,860	550		
6.3 Teaching Laboratory Support -general								
6.3.1	Dry lab	2	720	1,440	1,440			24 students, close to teaching labs, can be shared - for lecture, computer work, dry lab work
6.3.2	Coats / Backpack alcove	12	100	1,200	1,000	200		New Building: 10, BNR renovation: 2 Separate area adjoining teaching lab
	Subtotal 3 Teaching Lab Support - general	14		2,640	2,440	200		
Subtotal 06 Teaching Laboratories		**31**		**29,350**	**22,380**	**6,970**		

SPACE #	SPACE NAME	CURRENT TARGET: NUMBER OF SPACES	CURRENT TARGET: TARGET NET ROOM SIZE (NSF)	CURRENT TARGET: TOTAL NSF	NSF in **New Building**	NSF in **BNR renovated** space	NSF in **BNR unrenovated** space	NOTES / DECISION LOG *additional information on room data sheets*
07 Classrooms								
7.1 Classrooms					**NEW**	**BNR (ren)**	**BNR (exg)**	
7.1.1	350-seat Lecture Hall	1	4,370	4,370	4,370			
7.1.2	115-seat Active Learning Classroom	1	3,130	3,130	3,130			110 chairs, 5 ADA seats
7.1.3	VSB - 55-seat Case Study Classroom	2	-	-	-			VSB existing room 232 & 236
7.1.4	VSB - 40-seat Active Learning Classroom	1	-	-	-			VSB existing room 119 & 121
7.1.5	VSB - 48-seat Active Learning Classroom	1	-	-	-			VSB existing room 122 & 124
7.1.6	VSB - 30-seat Classroom	2	-	-	-			VSB existing room 219
	Subtotal 1 Classrooms	2		7,500	7,500			
Subtotal 07 Classrooms		**2**		**7,500**	**7,500**	**-**		
08 Collections								
8.1 Herbarium					**NEW**	**BNR (ren)**	**BNR (exg)**	currently 5,797nsf
8.1.1	Herbarium Collection - Compacted	1	2,500	2,500	2,500			includes 33% growth and library collection
8.1.2	Herbarium Collection - Reception	1	300	300	300			
8.1.3	Herbarium Lab - Sample Processing	1	150	150	150			
8.1.4	Herbarium Lab - Imaging	1	150	150	150			
8.1.5	Herbarium Lab - Database Workstations	1	150	150	150			
8.1.6	Herbarium Office	2	120	240	240			
	Subtotal 1 Herbarium	7		3,490	3,490			original request was 8,327 gsf
8.2 USDA Bee Collection								
8.2.1	USDA Bee Collection and Lab	1	1,560	1,560		1,560		includes expanded collection area
	Subtotal 2 USDA Bee Collection	1		1,560		1,560		
8.3 USU Insect Collection								
8.3.1	USU Insect Collection	1	1,755	1,755		1,755		Current collection in BNR 240; new space includes AEI Collection and expansion
8.3.2	Curator Office	1	120	120		120		
	Subtotal 3 USU Insect Collection	2		1,875		1,875		
8.4 USU Vertebrate Collection								
8.4.1	USU Vertebrate Collection	1	990	990		990		current storage in BNR 007, 027, 029, 029A, 031
	Subtotal 4 USU Vertebrate Collection	1		990		990		
Subtotal 08 Collections		**11**		**7,915**	**3,490**	**4,425**		
09 Building Support								
9.1 Shared / Common					**NEW**	**BNR (ren)**	**BNR (exg)**	
9.1.1	Restrooms	1	-	-				1 per gender per floor
9.1.2	Restrooms Unisex	1	-	-				1 per building at 60 sf
9.1.3	Mothers' Lounge	1	-	-				1 per building at 60 sf
9.1.4	Recycling Collection Points	1	-	-				as per Design Requirements
9.1.5	Vending	2	120	240	120	120		1 per building
	Subtotal 1 Shared / Common	6	120	240	120	120		
9.2 Service								
9.2.1	Attic Stock Storage	1	250	250	250			one per building per Design Requirements
9.2.2	Snow Equipment Storage	1	60	60	60			one per building, exterior access, per Design Requirements
9.2.3	Custodial Closet	5	-	-				one at 50 sf per 20,000 sf per Design Requirements
9.2.4	Custodial Storage	1	-	-				one at 180 sf per building, main floor, per Design Requirements
9.2.5	Loading/Receiving	1	500	500	500			
	Subtotal 2 Service	8	810	810	810	-		

SPACE #	SPACE NAME	CURRENT TARGET: NUMBER OF SPACES	CURRENT TARGET: TARGET NET ROOM SIZE (NSF)	CURRENT TARGET: TOTAL NSF	NSF in **New Building**	NSF in **BNR renovated** space	NSF in **BNR unrenovated** space	NOTES / DECISION LOG *additional information on room data sheets*
9.3 Utility								
9.3.1	Main Mechanical Room	1						
9.3.2	Electrical Room, Main	1						
9.3.3	Electrical Room, Floor	6						New Building: 3, BNR renovation: 3
9.3.4	Main Distribution Frame (MDF)	1						
9.3.5	Intermediate Distribution Frame (IDF)	6						New Building: 3, BNR renovation: 3
9.3.6	Shaft, Mechanical	-						
9.3.7	Shaft, Plumbing	-						
9.3.8	Dock	1	360	360	360			
9.3.9	Cylinder Storage	1	120	120	120			
	Subtotal 3 Utility	2		480	480			
9.4 Circulation								
9.4.1	Elevator, Passenger	2	-	-				
9.4.2	Elevator, Freight	1	-	-				
	Subtotal 4 Circulation	3	-	-				
Subtotal 09 Building Support		**19**		**1,530**	**1,410**	**120**		

Greenhouse (Existing - not included in totals) 3,762

CRSA PAYETTE

Graphic Program

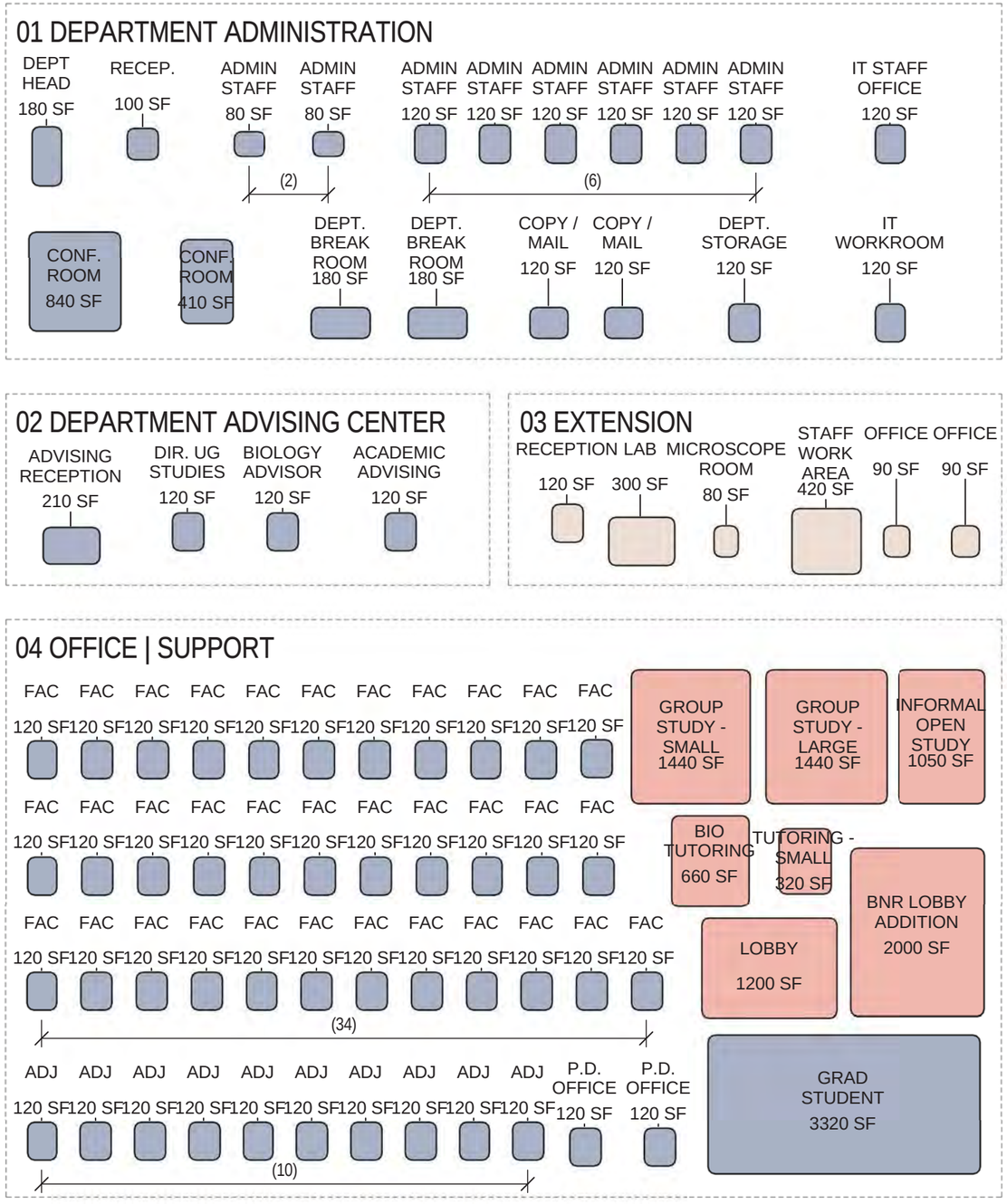

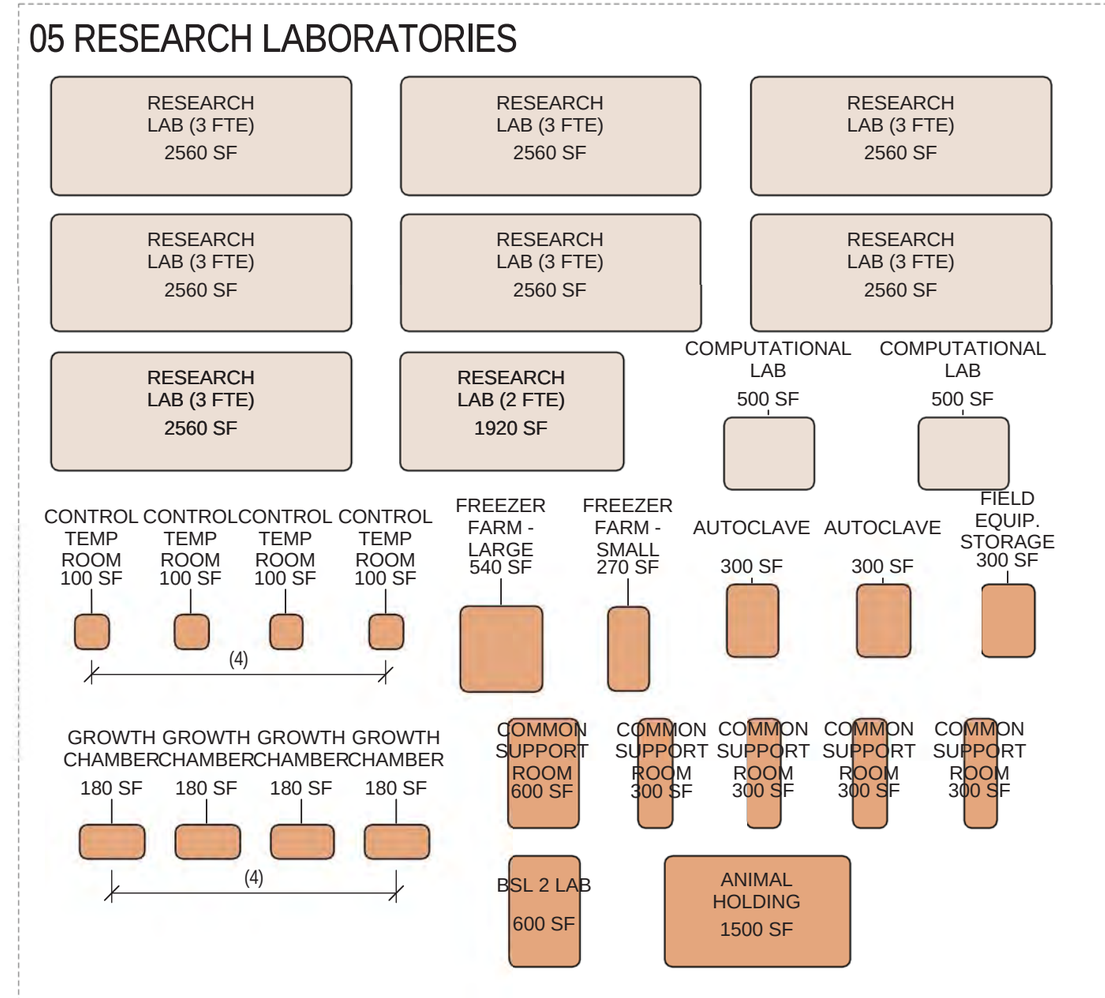

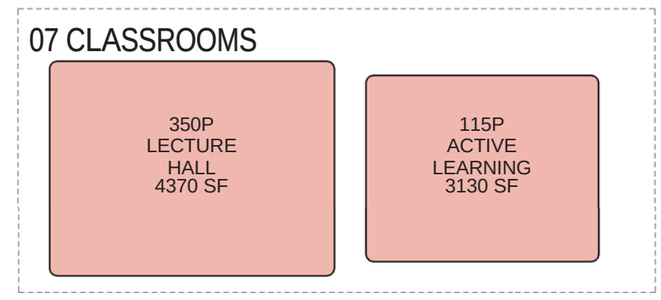

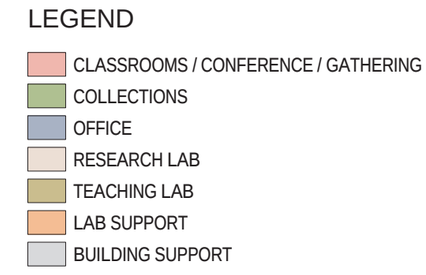

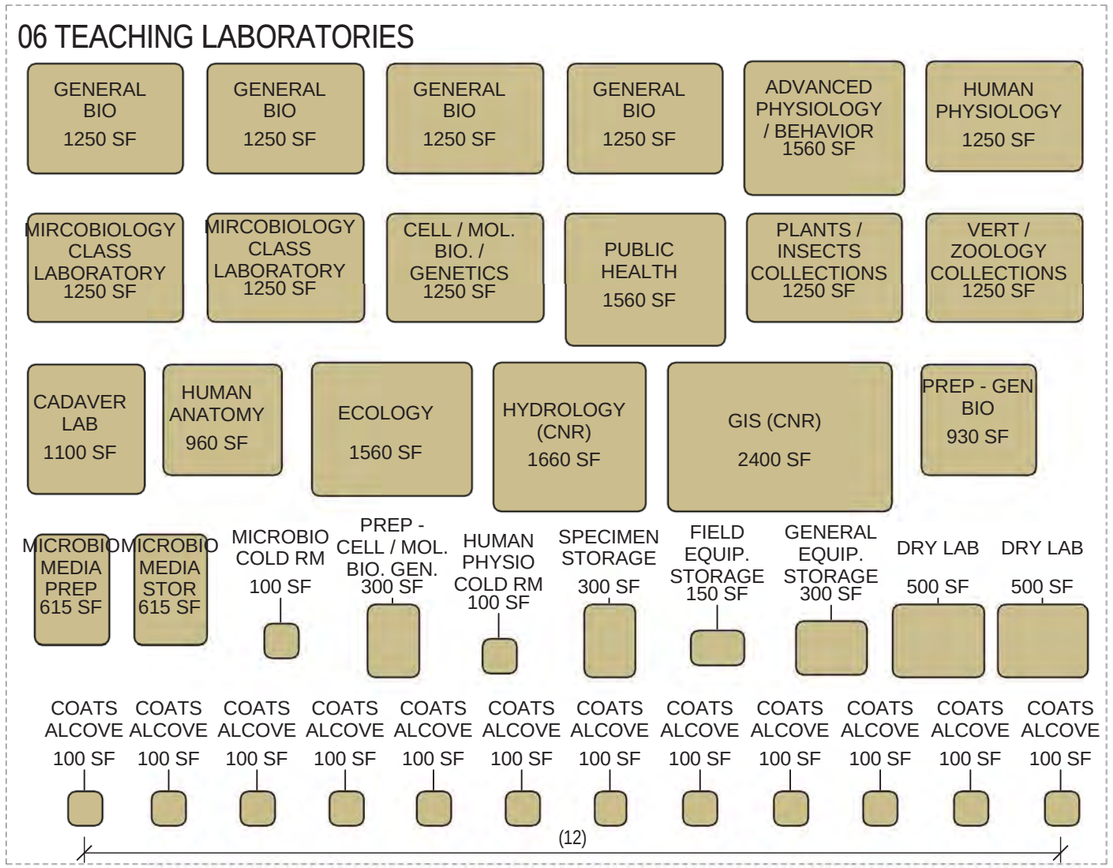
06 TEACHING LABORATORIES
GENERAL BIO 1250 SF
GENERAL BIO 1250 SF
GENERAL BIO 1250 SF
GENERAL BIO 1250 SF
ADVANCED PHYSIOLOGY / BEHAVIOR 1560 SF
HUMAN PHYSIOLOGY 1250 SF
MIRCOBIOLOGY CLASS LABORATORY 1250 SF
MIRCOBIOLOGY CLASS LABORATORY 1250 SF
CELL / MOL. BIO. / GENETICS 1250 SF
PUBLIC HEALTH 1560 SF
PLANTS / INSECTS COLLECTIONS 1250 SF
VERT / ZOOLOGY COLLECTIONS 1250 SF
CADAVER LAB 1100 SF
HUMAN ANATOMY 960 SF
ECOLOGY 1560 SF
HYDROLOGY (CNR) 1660 SF
GIS (CNR) 2400 SF
PREP - GEN BIO 930 SF
MICROBIO MEDIA PREP 615 SF
MICROBIO MEDIA STOR 615 SF
MICROBIO COLD RM 100 SF
PREP - CELL / MOL. BIO. GEN. 300 SF
HUMAN PHYSIO COLD RM 100 SF
SPECIMEN STORAGE 300 SF
FIELD EQUIP. STORAGE 150 SF
GENERAL EQUIP. STORAGE 300 SF
DRY LAB 500 SF
DRY LAB 500 SF
COATS ALCOVE 100 SF
(12)

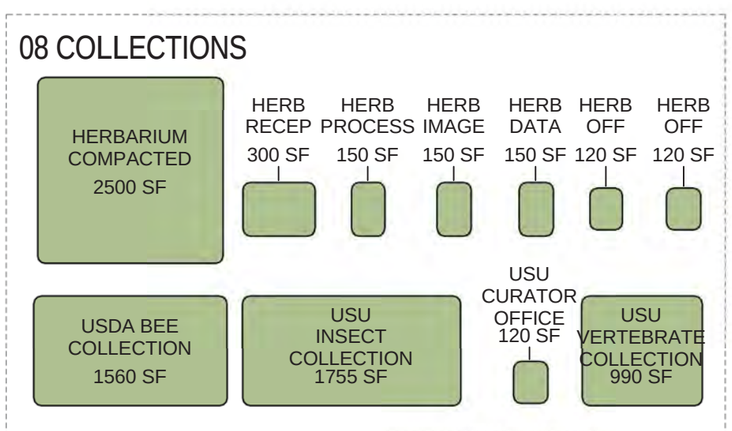
08 COLLECTIONS
HERBARIUM COMPACTED 2500 SF
HERB RECEP 300 SF
HERB PROCESS 150 SF
HERB IMAGE 150 SF
HERB DATA 150 SF
HERB OFF 120 SF
HERB OFF 120 SF
USDA BEE COLLECTION 1560 SF
USU INSECT COLLECTION 1755 SF
USU CURATOR OFFICE 120 SF
USU VERTEBRATE COLLECTION 990 SF

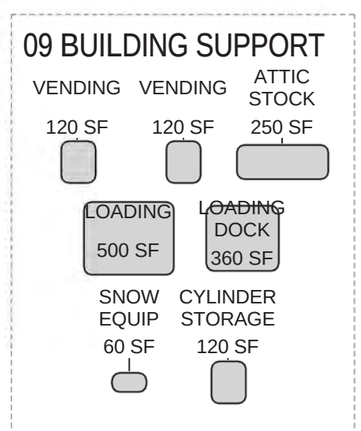
09 BUILDING SUPPORT
VENDING 120 SF
VENDING 120 SF
ATTIC STOCK 250 SF
LOADING 500 SF
LOADING DOCK 360 SF
SNOW EQUIP 60 SF
CYLINDER STORAGE 120 SF

Adjacency Diagrams

The adjacency diagrams illustrate desired groupings of selected spaces which should be directly connected or in close proximity to each other in order to enhance functional efficiencies wherever possible. For example, the four General Biology teaching labs are proposed to be serviced by a single large prep room rather than multiple smaller rooms, so that prep activities can be consolidated. This suggests an arrangement where all of the labs and the prep room are connected in a line of adjoining rooms, or clustered near each other. Regardless of how the new building and BNR layouts evolve in subsequent design phases, the space relationships shown in these diagrams define blocks of rooms that should remain together in any scenario.

RESEARCH LABS / SUPPORT

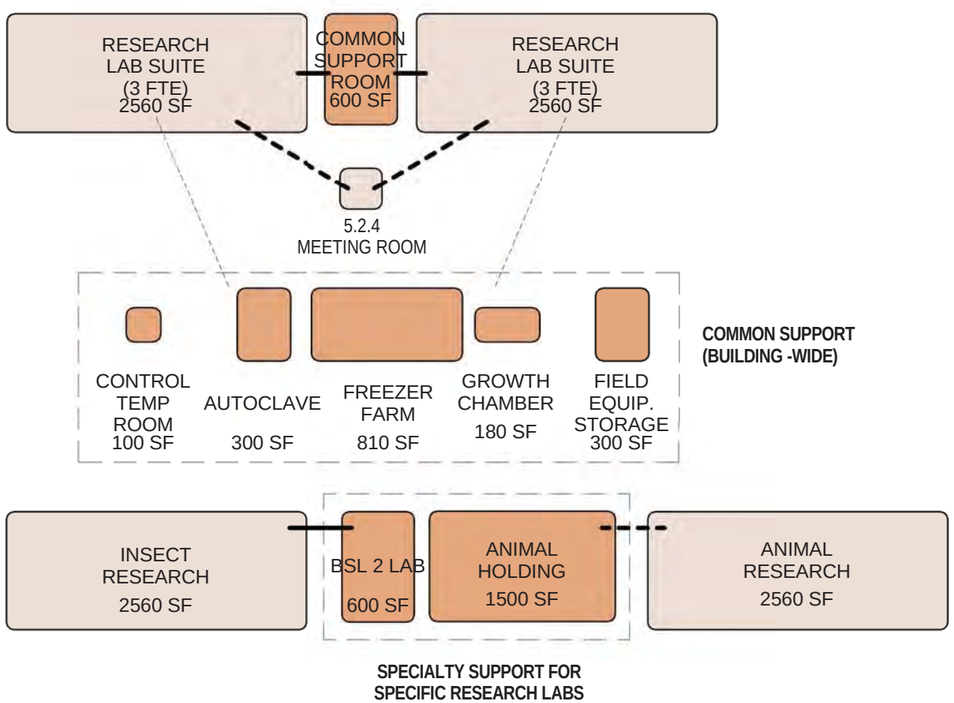

GENERAL BIOLOGY TEACHING LABS

MICROBIOLOGY TEACHING LABS

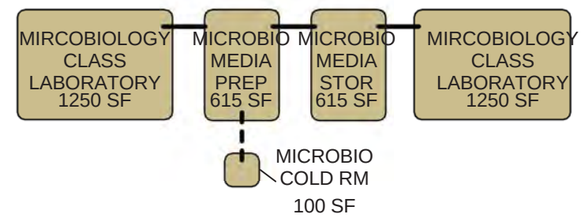

CADAVER / ANATOMY / PHYSIOLOGY TEACHING LABS

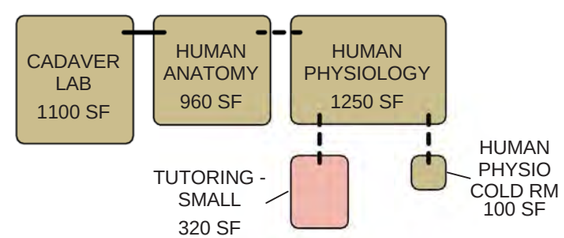

CELL / MOLECULAR BIO / GENETICS AND ECOLOGY TEACHING LABS

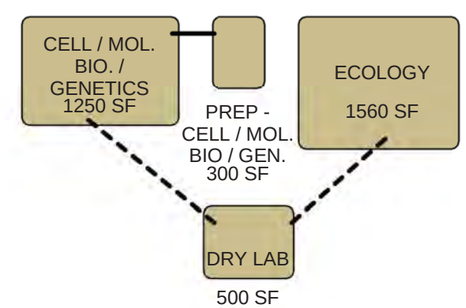

VERTEBRATE TEACHING LAB / COLLECTIONS

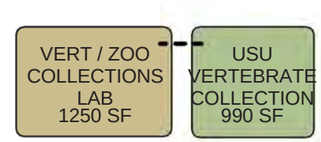

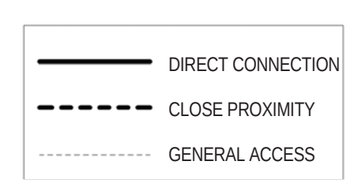

Room Diagrams

The room sheets that follow describe the criteria for program spaces as a basis for further development in the design of the project. Each sheet includes a data portion and a diagram. Diagrams of individual spaces represent the requirements for size, components and general spatial relationships within the rooms, but not necessarily the final layout. The accompanying data describes requirements for specific room components. A master MEP Standards list summarizing the HVAC, plumbing and lighting design criteria for the different spaces in the building is provided prior to the room diagrams. These criteria should be applied where "standards" are referenced in the data portion for individual rooms.

The room sheets also list major lab equipment for the space, including fixed items such as fume hoods and autoclaves that are included within the building construction contract and other free-standing items such as refrigerators and freezers that occupy floor space, and movable furniture (such as desks, chairs, computer workstations). Other smaller and countertop equipment items are listed in the appendix, as part of an equipment inventory of individual labs provided by faculty.

It is assumed that the all of the equipment for teaching labs will be provided within the project budget.

Project Design Standards for Mechanical, Electrical and Plumbing

Following is a summary of HVAC, plumbing, and lighting design criteria for the major spaces in the building. These criteria should be used where "Standards" are referenced in the room data sheets. Note: Further study will be conducted to determine any criteria that can be revised/reduced for energy savings, where feasible.

HVAC:

Outside Air Conditions:	Summer:	93° F db/ 62° F wb
	Winter:	-20° F db
Temperature/ RH:	Summer:	72° F db / 55% RH
(Animal)	Winter:	70° F db / 45% RH
Temperature/ RH:	Summer:	75° F db / 60% RH
(Labs)	Winter:	72° F db
Temperature/ RH:	Summer:	75° F db / 60% RH
(Offices)	Winter:	72° F db
Air changes:	Teaching Labs/Support:	Occupied: min. 6 per hour / Unoccupied: min. 4 per hour
	Research Labs/Support:	Occupied: min. 6 per hour / Unoccupied: min. 4 per hour
	Instrument Rooms:	Occupied: min. 6 per hour / Unoccupied: min. 4 per hour
	Animal Holding Rooms:	12 per hour
Outside Air:	Labs	100% outside air
Ventilation Rates:	[ASHRAE 62.1 - 2010]	
	Classrooms:	8 cfm/ person
	Offices:	17 cfm/ person
	Conference Rooms:	6 cfm/ person

Cooling Loads

Teaching Labs:	Lights: 1.4 watts per sf / Equipment: 5 watts per sf
Research Labs:	Lights: 1.4 watts per sf / Equipment: 10 watts per sf
Lab Support/Instrument:	Lights: 1.4 watts per sf /Equipment: 15 watts per sf
Animal Holding Rooms:	Lights: 1.4 watts per sf / Equipment: 5 watts per sf
Classrooms:	Lights: 1.3 watts per sf / Equipment: 2 watts per sf
Offices:	Lights: 1.1 watts per sf / Equipment: 2 watts per sf
Conference Rooms:	Lights: 1.3 watts per sf / Equipment: 2 watts per sf

Plumbing:

Compressed Air:	80 to 100 psig at final outlet
Natural Gas:	6" – 10" WC at final outlet
Vacuum:	19-20 inches Hg at lab outlets
Pure Water:	18 megohm-cm resistivity provided by central system

Hood Types / Utilities:
Chemical Fume Hoods:
Utility requirements vary, variable flow with automatic sash return
Biosafety Cabinets:
Recirculating, unless otherwise noted

Electrical:

Lighting (Average fc):	Research Labs	LED, 75 fc
	Teaching Labs	LED, 75 fc
	Classrooms	LED, 50 fc
	Offices	LED, 30 fc + task
	Conference Rooms	LED, 50 fc
	Lecture Halls	LED, 50 fc
	Lobby/ Lounges	LED, 20 fc
	Corridors	LED, 15 fc

Lighting Controls:

Research Labs	Occupancy, Daylight, Dimming, Manual
Teaching Labs	Vacancy, Daylight, Dimming, Zoned, Presets, Manual
Classrooms	Vacancy, Daylight, Dimming, Zoned, Presets, Manual
Offices	Vacancy, Daylight, Dimming, Manual
Conference Rooms	Vacancy, Daylight, Dimming, Zoned, Presets, Manual, AV
Lecture Halls:	Vacancy, Daylight, Dimming, Zoned, Presets, Manual, AV
Lobby/ Lounges	Relay time based, Daylight, Manual
Corridors	Relay time based, Daylight, Manual

General Power:

Research Labs	Panel, convenience duplex at 10', quad at 30"' along counters, power for equipment
Teaching Labs	Convenience duplex at 10', quad at 30" along counters, 1 duplex for every 2 students, power for equipment
Classrooms	Convenience duplex at 10', quad at 6' along counters, 1 duplex for every 2 students
Offices	2 quad, 1 duplex outlet, 50% of outlets auto-switched
Conference Rooms	Convenience duplex at 10', floorbox(es) with quad under table, power for equipment
Lecture Halls	Convenience duplex at 20', floorbox(es) with quad at podium location(s), power for equipment
Lobby/ Lounges	Convenience duplex at 20', floorbox(es) with quad at select gathering/ table location
Corridors	Convenience duplex at 30'

Emergency Power:

Research Labs	Fume Hoods, Freezers, growth chambers, 1 quad per researcher pod/area, select equipment
Teaching Labs	Not Required
Classrooms	Not Required
Offices	Not Required
Conference Rooms	Not Required
Lecture Halls:	Not Required
Lobby/ Lounges	Not Required
Corridors	Not Required

Voice/Data:

Research Labs	Outlets at 10', outlets at workstations, wireless
Teaching Labs	Outlets at 10', outlet at teacher, wireless
Classrooms	Outlets at 10', outlet at teacher, wireless
Offices	2 Outlets, wireless
Conference Rooms	1 Outlet per wall, floorbox outlets, wireless
Lecture Halls:	Outlets at 20', outlet at podium(s), wireless
Lobby/ Lounges	Min 1 outlet, wireless
Corridors	Wireless

Security:	Research Labs	Access Controls
	Teaching Labs	Not Required
	Classrooms	Not Required
	Offices	Not Required
	Conference Rooms	Not Required
	Lecture Halls:	Not Required
	Lobby/ Lounges	General camera coverage
	Corridors	General camera coverage
Wireless Clocks:	Research Labs	Yes
	Teaching Labs	Yes
	Classrooms	Yes
	Offices	No
	Conference Rooms	Yes
	Lecture Halls:	Yes
	Lobby/ Lounges	No
	Corridors	No
Audio/Visual:	Research Labs	Not Required
	Teaching Labs	Yes
	Classrooms	Yes
	Offices	Not Required
	Conference Rooms	Yes
	Lecture Halls:	Yes
	Lobby/ Lounges	Not Required
	Corridors	Not Required

1.1.1 Department Head Office

Room Data Sheet Detail

Department: 1.1 Administrative
Issue Date:
Room No: *NA*

Space Information

Room Function: *Office for Biology Department Head*
Adjacencies: *1.1.4 - Administration Office*
Access: *Staff Only*
Room Utilization *M-F 8am-5pm*
General Notes:

Special Requirements

Lighting Controls:
Acoustic Req:
Structural Req:
Security:
Other Spec Req:

Room Size and Capacity

Proposed Area: *200*
Total Area: *180 SF*
Room Quantity: *1*
Assigned Cap: *1*
Unassigned Cap: *2*
Total Cap: *3*

Finishes, Doors and Windows

Floor: *Carpet Tile*
Base: *Rubber*
Walls: *Gypsum Board*
Wall Finish: *Paint - low v.o.c.*
Ceiling: *ACT 2'X2'*
Ceiling Height: *9'-0"*

Door Size: *3'-0" single leaf*
Door Type: *Wood*
Door Vis Panel: *Required*
Window Treat: *Light filtering or as noted*
Window Skylight: *none*

Casework and Built-ins

Wall Cabinets:
Base Cabinets:
Counter Tops:
Counter (LF):
Counter Height:

Shelving (LF):
Drawer Units:
White Boards: *Yes, as shown*
Tack Boards *Yes*
Proj. Screen: *No*

Communications

See Project Design Standards in Chapter 3 and electrical/telecomm narrative in Chapter 4

HVAC

Air Changes: *Office Standard*
Air Circulation: *Air may be returned*
Pressure: *Neutral*
Temperature: *Office Standard*
Rel. Humidity: *Office Standard*
Local Exhaust: *No*
Air Filtration: *MERV 8 / MERV 13*
CO2 Sensor: *No*
Distribution: *Individual Tstat & VAV Box*
Other HVAC: *N/A*

Electrical

See Project Design Standards in Chapter 3 and electrical/telecomm narrative in Chapter 4

Plumbing

Sinks: *None*
Pure Water: *None*
Hot/Cold Water: *None*
Hose Bibb: *None*
Floor Drain: *None*
Waste: *None*
Emer. Eyewash: *None*
Emer. Station: *None*
Gases:
Comp. Air: *None*
Lab Gas: *None*
Vacuum: *None*
CO^2: *None*
Other Gas: *None*
Fire Protection: *Sprinkler Heads*

Equipment

Type	Count	Status
60" Flat Panel Monitor. Wall mounted	1	3
Office Computer	1	4

Type	Count	Status
30" Worksurface- 19 LF	1	3
36"dia. Round Table	1	3
42" Lateral File 2-Drawers	1	3
Flipper Door Unit w/ Task Light- 16LF	1	3
Guest Chair	3	3
Pedestal File Cabinet	1	3

Furniture

Type	Count	Status
Task Chair	1	3
Trash/Recycle Bin	2	3

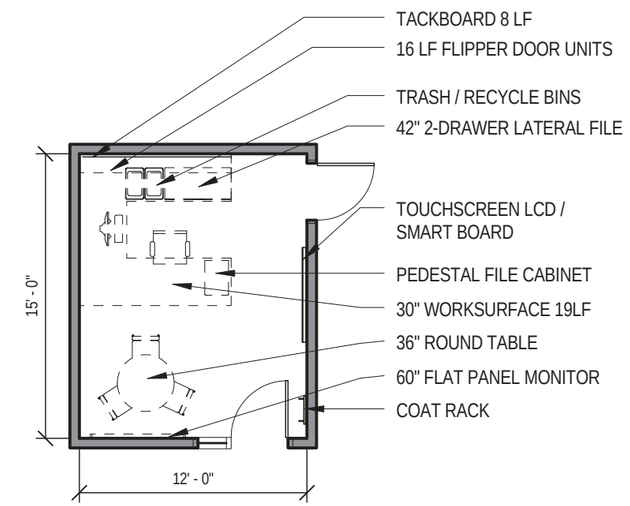

Status Key: **1** = Furnished and Installed by Contractor (CFCI), **2** = Furnished by Owner, Contractor Installed (OFCI), **3** = Furnished and Installed by Owner (OFOI), **4** = Provided Outside of Project Budget

Scale: 1/8" = 1'-0"

CRSA PAYETTE

1.1.2 Department Reception

Room Data Sheet Detail

Department: 1.1 Administrative
Issue Date:
Room No: *4.206*

Space Information

Room Function: *Reception and waiting area for department office*
Adjacencies: *Admin Assistant (1.1.3) immediate, Admin Staff Office (1.1.4)*
Access: *Public*
Room Utilization *M-F 8am-5pm*
General Notes:

Special Requirements

Lighting Controls:
Acoustic Req:
Structural Req:
Security:
Other Spec Req:

Room Size and Capacity

Proposed Area: *100*
Total Area: *110 SF*
Room Quantity: *1*
Assigned Cap: *1*
Unassigned Cap: *2*
Total Cap: *3*

Finishes, Doors and Windows

Floor: *Carpet Tile*
Base: *Rubber*
Walls: *Gypsum Board*
Wall Finish: *Paint - low v.o.c.*
Ceiling: *ACT 2'X2'*
Ceiling Height: *Varies*

Door Size: *3'-0" single leaf*
Door Type: *Wood*
Door Vis Panel: *Required*
Window Treat: *Light filtering or as noted*
Window Skylight: *None*

Casework and Built-ins

Wall Cabinets:
Base Cabinets:
Counter Tops: *No*
Counter (LF):
Counter Height:

Shelving (LF):
Drawer Units:
White Boards: *No*
Tack Boards *Yes*
Proj. Screen: *No*

Communications

See Project Design Standards in Chapter 3 and electrical/telecomm narrative in Chapter 4

HVAC

Air Changes: *Office Standard*
Air Circulation: *Air may be returned*
Pressure: *Neutral*
Temperature: *Office Standard*
Rel. Humidity: *Office Standard*
Local Exhaust: *No*
Air Filtration: *MERV 8 / MERV 13*
CO2 Sensor: *No*
Distribution: *Shared Tstat & VAV Box*
Other HVAC: *N/A*

Electrical

See Project Design Standards in Chapter 3 and electrical/telecomm narrative in Chapter 4

Plumbing

Sinks: *None*
Pure Water: *None*
Hot/Cold Water: *None*
Hose Bibb: *None*
Floor Drain: *None*
Waste: *None*
Emer. Eyewash: *None*
Emer. Station: *None*
Gases:
Comp. Air: *None*
Lab Gas: *None*
Vacuum: *None*
CO^2: *None*
Other Gas: *None*
Fire Protection: *Sprinkler Heads*

Equipment

Furniture

Type	Count	Status
42" Lateral File 2-Drawers	1	3
Guest Chair	3	3

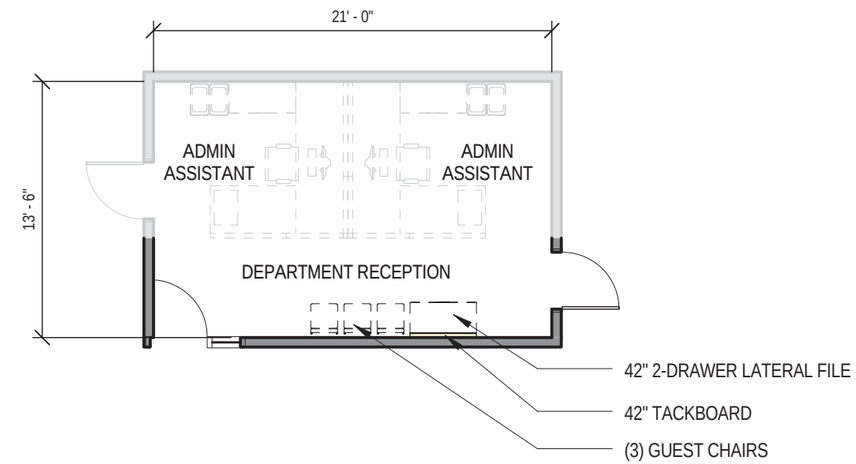

Status Key: **1** = Furnished and Installed by Contractor (CFCI), **2** = Furnished by Owner, Contractor Installed (OFCI), **3** = Furnished and Installed by Owner (OFOI), **4** = Provided Outside of Project Budget

Scale: 1/8" = 1'-0"

CRSA PAYETTE

1.1.3 Administrative Assistant

Room Data Sheet Detail

Department: 1.1 Administrative
Issue Date:
Room No: *4.207*

Space Information

Room Function: *Work area for Biology Department administrative staff*
Adjacencies: *Department Reception (1.1.2)*
Access:
Room Utilization *M-F 8am-5pm*
General Notes:

Special Requirements

Lighting Controls:
Acoustic Req:
Structural Req:
Security:
Other Spec Req:

Room Size and Capacity

Proposed Area: *80*
Total Area: *81 SF*
Room Quantity: *2*
Assigned Cap: *1*
Unassigned Cap: *0*
Total Cap: *1*

Finishes, Doors and Windows

Floor: *Broadloom Carpet*
Base: *Rubber*
Walls: *Gypsum Board*
Wall Finish: *Paint - low v.o.c.*
Ceiling: *ACT 2'x2'*
Ceiling Height: *9'-0"*

Door Size: *3'-0" single leaf*
Door Type: *Wood*
Door Vis Panel:
Window Treat: *Light filtering or as noted*
Window Skylight: *None*

Casework and Built-ins

Wall Cabinets:
Base Cabinets:
Counter Tops: *No*
Counter (LF):
Counter Height:

Shelving (LF):
Drawer Units:
White Boards: *No*
Tack Boards *No*
Proj. Screen: *No*

Communications

See Project Design Standards in Chapter 3 and electrical/telecomm narrative in Chapter 4

HVAC

Air Changes: *Office Standard*
Air Circulation: *Air may be returned*
Pressure: *Neutral*
Temperature: *Office Standard*
Rel. Humidity: *Office Standard*
Local Exhaust: *No*
Air Filtration: *MERV 8 / MERV 13*
CO2 Sensor: *No*
Distribution: *Shared Tstat & VAV Box*
Other HVAC: *N/A*

Electrical

See Project Design Standards in Chapter 3 and electrical/telecomm narrative in Chapter 4

Plumbing

Sinks: *None*
Pure Water: *None*
Hot/Cold Water: *None*
Hose Bibb: *None*
Floor Drain: *None*
Waste: *None*
Emer. Eyewash: *None*
Emer. Station: *None*
Gases:
Comp. Air: *None*
Lab Gas: *None*
Vacuum: *None*
CO^2: *None*
Other Gas: *None*
Fire Protection: *Sprinkler Heads*

Equipment

Type	Count	Status
Office Computer	1	4

Furniture

Type	Count	Status
30" Worksurface- 12LF	1	3
42" Lateral File 2-Drawers	1	3
Pedestal File Cabinet	1	3
Task Chair	1	3
Trash/Recycle Bin	2	3

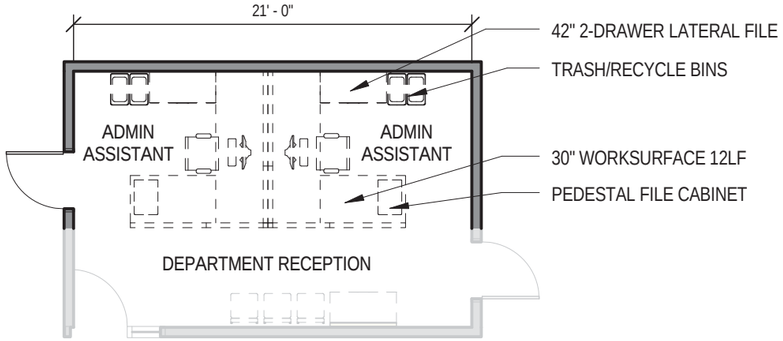

Status Key: **1** = Furnished and Installed by Contractor (CFCI), **2** = Furnished by Owner, Contractor Installed (OFCI), **3** = Furnished and Installed by Owner (OFOI), **4** = Provided Outside of Project Budget

Scale: 1/8" = 1'-0"

CRSA PAYETTE

1.1.4 Administrative Staff Office

Room Data Sheet Detail

Department: 1.1 Administrative
Issue Date:
Room No: *NA*

Space Information

Room Function: *Office for Biology Department administrative staff*
Adjacencies: *1.1.1 immediate, 1.1.2 , 1.1.3 immediate*
Access: *Staff only*
Room Utilization *M-F 8am-5pm*
General Notes:

Special Requirements

Lighting Controls: *See Proj. Standards, Ch. 3*
Acoustic Req: *See accoustics narrative, Ch. 4*
Structural Req: *None*
Security: *Locked*
Other Spec Req:

Room Size and Capacity

Proposed Area: *120*
Total Area: *120 SF*
Room Quantity: *6*
Assigned Cap: *1*
Unassigned Cap: *1*
Total Cap: *2*

Finishes, Doors and Windows

Floor: *Carpet Tile*
Base: *Rubber*
Walls: *Gypsum Board*
Wall Finish: *Paint - low v.o.c.*
Ceiling: *ACT 2'X2'*
Ceiling Height: *9'-0"*

Door Size: *3'-0" single leaf*
Door Type: *Wood*
Door Vis Panel: *Required*
Window Treat: *Light filtering*
Window Skylight: *None*

Casework and Built-ins

Wall Cabinets: *None*
Base Cabinets: *None*
Counter Tops: *None*
Counter (LF): *None*
Counter Height: *None*

Shelving (LF): *None*
Drawer Units: *None*
White Boards: *Yes, as shown*
Tack Boards *Yes*
Proj. Screen: *None*

Communications

See Project Design Standards in Chapter 3 and electrical/telecomm narrative in Chapter 4

HVAC

Air Changes: *Office Standard*
Air Circulation: *Air may be returned*
Pressure: *Neutral*
Temperature: *Office Standard*
Rel. Humidity: *Office Standard*
Local Exhaust: *No*
Air Filtration: *MERV 8 / MERV 13*
CO2 Sensor: *No*
Distribution: *Shared Tstat & VAV Box*
Other HVAC: *N/A*

Electrical

See Project Design Standards in Chapter 3 and electrical/telecomm narrative in Chapter 4

Plumbing

Sinks: *None*
Pure Water: *None*
Hot/Cold Water: *None*
Hose Bibb: *None*
Floor Drain: *None*
Waste: *None*
Emer. Eyewash: *None*
Emer. Station: *None*
Gases:
Comp. Air: *None*
Lab Gas: *None*
Vacuum: *None*
CO^2: *None*
Other Gas: *None*
Fire Protection: *Sprinkler Heads*

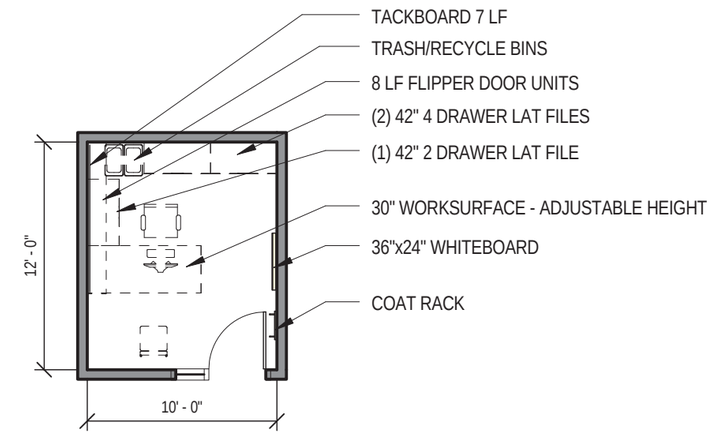

Equipment

Type	Count	Status
Office Computer	1	4

Furniture

Type	Count	Status
30" Worksurface Adjustable Height- 6 LF	1	3
42" Lateral File 2-Drawers	1	3
42" Lateral File 4-Drawers	2	3
Flipper Door Unit- 8 LF	1	3
Guest Chair	1	3
Task Chair	1	3
Trash/Recycle Bin	2	3

Status Key: **1** = Furnished and Installed by Contractor (CFCI), **2** = Furnished by Owner, Contractor Installed (OFCI), **3** = Furnished and Installed by Owner (OFOI), **4** = Provided Outside of Project Budget

Scale: 1/8" = 1'-0"

CRSA PAYETTE

1.1.5 IT Staff Office

Room Data Sheet Detail

Department: 1.1 Administrative
Issue Date:
Room No: *NA*

Space Information

Room Function: *Office for Biology Department IT staff*
Adjacencies: *IT Work Room (1.2.9)*
Access: *Staff Only*
Room Utilization *M-F 8am-5pm*
General Notes:

Special Requirements

Lighting Controls:
Acoustic Req:
Structural Req:
Security:
Other Spec Req:

Room Size and Capacity

Proposed Area: *120*
Total Area: *120 SF*
Room Quantity: *1*
Assigned Cap: *1*
Unassigned Cap: *1*
Total Cap: *2*

Finishes, Doors and Windows

Floor: *Carpet Tile*
Base: *Rubber*
Walls: *Gypsum Board*
Wall Finish: *Paint - low v.o.c.*
Ceiling: *ACT 2'x2'*
Ceiling Height: *Varies*

Door Size: *3'-0" single leaf*
Door Type: *Wood*
Door Vis Panel: *Required*
Window Treat: *Light filtering*
Window Skylight: *None*

Casework and Built-ins

Wall Cabinets:
Base Cabinets:
Counter Tops: *No*
Counter (LF):
Counter Height:

Shelving (LF): *24'*
Drawer Units:
White Boards: *No*
Tack Boards *Yes*
Proj. Screen: *No*

Communications

See Project Design Standards in Chapter 3 and electrical/telecomm narrative in Chapter 4

HVAC

Air Changes: *Office Standard*
Air Circulation: *Air may be returned*
Pressure: *Neutral*
Temperature: *Office Standard*
Rel. Humidity: *Office Standard*
Local Exhaust: *No*
Air Filtration: *MERV 8 / MERV 13*
CO2 Sensor: *No*
Distribution: *Individual Tstat & VAV Box*
Other HVAC: *N/A*

Electrical

See Project Design Standards in Chapter 3 and electrical/telecomm narrative in Chapter 4

Plumbing

Sinks: *None*
Pure Water: *None*
Hot/Cold Water: *None*
Hose Bibb: *None*
Floor Drain: *None*
Waste: *None*
Emer. Eyewash: *None*
Emer. Station: *None*
Gases:
Comp. Air: *None*
Lab Gas: *None*
Vacuum: *None*
CO^2: *None*
Other Gas: *None*
Fire Protection: *Sprinkler Heads*

Equipment

Type	Count	Status
3' Metal Gorilla Shelves	1	3
12" Deep Wall Mounted Shelves- 12 LF	1	3
18" Deep Wall Mounted Shelves- 12 LF	1	3
30" Worksurface- 16 LF	1	3
Pedestal File Cabinet	1	3

Furniture

Type	Count	Status
Task Chair	2	3
Trash/Recycle Bin	2	3

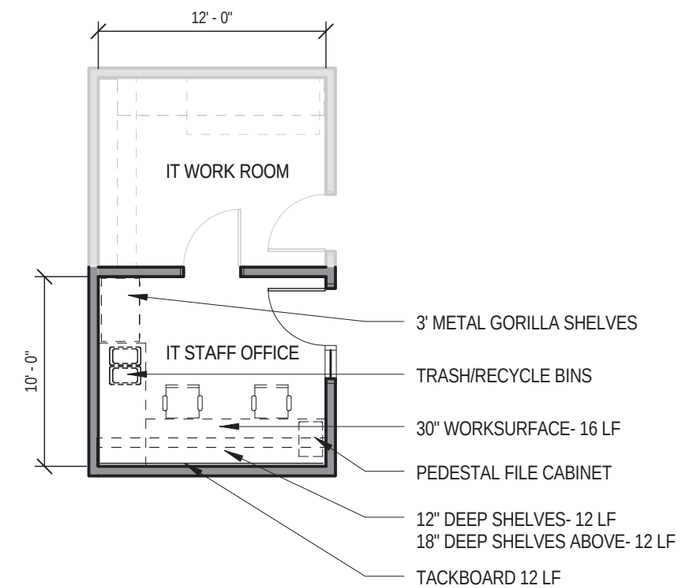

Status Key: **1** = Furnished and Installed by Contractor (CFCI), **2** = Furnished by Owner, Contractor Installed (OFCI), **3** = Furnished and Installed by Owner (OFOI), **4** = Provided Outside of Project Budget

Scale: 1/8" = 1'-0"

CRSA PAYETTE

1.2.1 Conference Room - Large

Room Data Sheet Detail

Department: 1.2 Administrative Support
Issue Date:
Room No: *NA*

Space Information

Room Function:
Adjacencies: *1.2.3 BREAK ROOM*
Access:
Room Utilization
General Notes:

Special Requirements

Lighting Controls: *Dimmable*
Acoustic Req:
Structural Req:
Security:
Other Spec Req:

Room Size and Capacity

Proposed Area:	*1200*
Total Area:	*840 SF*
Room Quantity:	*1*
Assigned Cap:	*0*
Unassigned Cap:	*40*
Total Cap:	*40*

Finishes, Doors and Windows

Floor:	*Carpet Tile*
Base:	*Rubber*
Walls:	*Gypsum Board*
Wall Finish:	*Paint - low v.o.c.*
Ceiling:	*ACT (2'x2')*
Ceiling Height:	*Varies*

Door Size:	*3'-0" single leaf*
Door Type:	*Wood*
Door Vis Panel:	*Required*
Window Treat:	*Room darkening*
Window Skylight:	*None*

Casework and Built-ins

Wall Cabinets:	
Base Cabinets:	
Counter Tops:	*No*
Counter (LF):	
Counter Height:	

Shelving (LF):	
Drawer Units:	
White Boards:	*Yes*
Tack Boards	*No*
Proj. Screen:	*Yes*

Communications

See Project Design Standards in Chapter 3 and electrical/telecomm narrative in Chapter 4

HVAC

Air Changes:	*Conf. Rm. Standard*
Air Circulation:	*Air may be returned*
Pressure:	*Neutral*
Temperature:	*Conf RM Standard*
Rel. Humidity:	*Conf RM Standard*
Local Exhaust:	*No*
Air Filtration:	*MERV 8 / MERV 13*
CO2 Sensor:	*Yes*
Distribution:	*Individual Tstat & VAV Box*
Other HVAC:	*N/A*

Electrical

See Project Design Standards in Chapter 3 and electrical/telecomm narrative in Chapter 4

Plumbing

Sinks:	*None*
Pure Water:	*None*
Hot/Cold Water:	*None*
Hose Bibb:	*None*
Floor Drain:	*None*
Waste:	*None*
Emer. Eyewash:	*None*
Emer. Station:	*None*
Gases:	
Comp. Air:	*None*
Lab Gas:	*None*
Vacuum:	*None*
CO^2:	*None*
Other Gas:	*None*
Fire Protection:	*Sprinkler Heads*

Equipment

Furniture

Type	Count	Status
24"x60" Table	18	3
Conference Chair	40	3
Trash/Recycle Bin	2	3

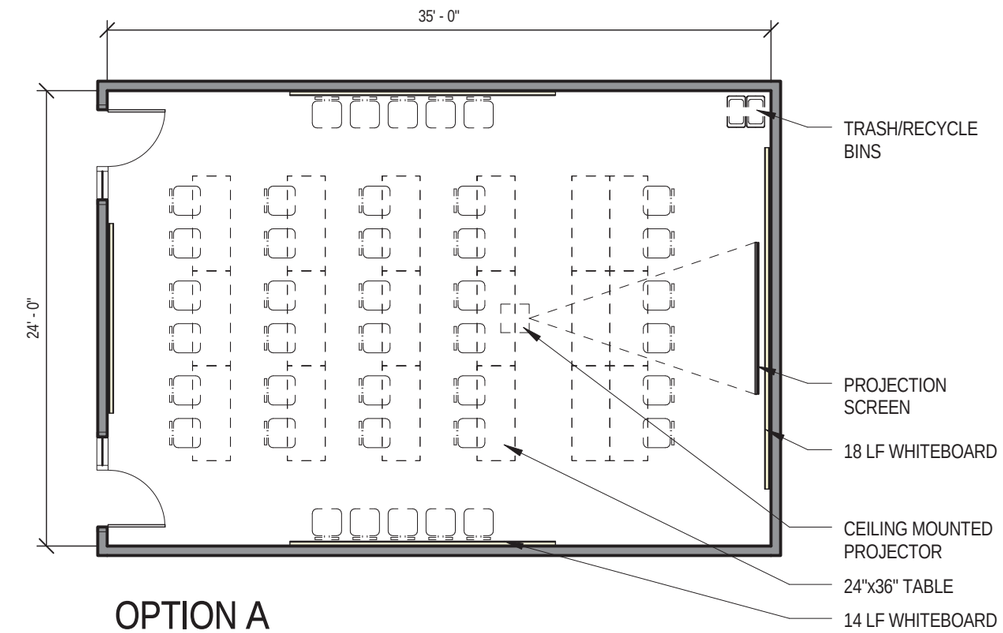

OPTION A

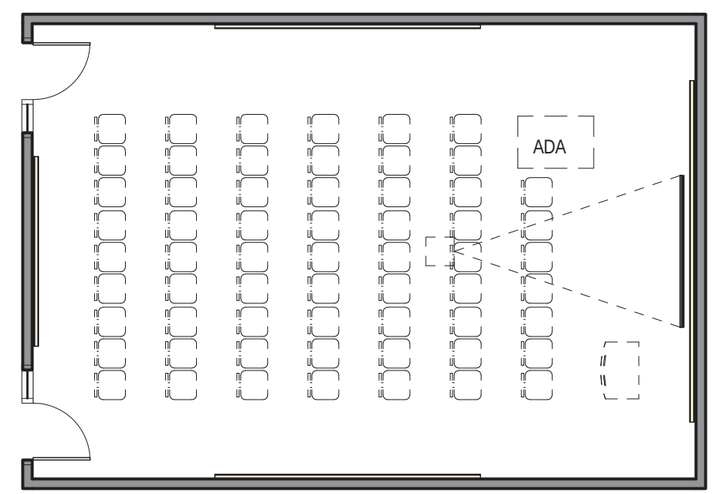

OPTION B

Status Key: **1** = Furnished and Installed by Contractor (CFCI), **2** = Furnished by Owner, Contractor Installed (OFCI), **3** = Furnished and Installed by Owner (OFOI), **4** = Provided Outside of Project Budget

Scale: 1/8" = 1'-0"

CRSA PAYETTE

1.2.2 Conference Room - Small

Room Data Sheet Detail

Department: 1.2 Administrative Support
Issue Date:
Room No: *NA*

Space Information

Room Function: *MEETING SPACE. STORAGE/ DISPLAY OF DISERTATIONS*
Adjacencies:
Access:
Room Utilization
General Notes:

Special Requirements

Lighting Controls: *Dimmable*
Acoustic Req:
Structural Req:
Security:
Other Spec Req:

Room Size and Capacity

Proposed Area:	600
Total Area:	409 SF
Room Quantity:	1
Assigned Cap:	0
Unassigned Cap:	25
Total Cap:	25

Finishes, Doors and Windows

Floor:	Carpet Tile
Base:	Rubber
Walls:	Gypsum Board
Wall Finish:	Paint - low v.o.c.
Ceiling:	ACT (2'x2')
Ceiling Height:	Varies

Door Size:	3'-0" single leaf
Door Type:	Wood
Door Vis Panel:	Required
Window Treat:	Room darkening
Window Skylight:	None

Casework and Built-ins

Wall Cabinets:	Wood
Base Cabinets:	Wood
Counter Tops:	No
Counter (LF):	
Counter Height:	

Shelving (LF):	
Drawer Units:	
White Boards:	Yes
Tack Boards	No
Proj. Screen:	Yes

Communications

See Project Design Standards in Chapter 3 and electrical/telecomm narrative in Chapter 4

HVAC

Air Changes:	Conf. Rm. Standard
Air Circulation:	Air may be returned
Pressure:	Neutral
Temperature:	Conf. Rm. Standard
Rel. Humidity:	Conf. Rm. Standard
Local Exhaust:	No
Air Filtration:	MERV 8 / MERV 13
CO2 Sensor:	Yes
Distribution:	Individual Tstat & VAV Box
Other HVAC:	N/A

Electrical

See Project Design Standards in Chapter 3 and electrical/telecomm narrative in Chapter 4

Plumbing

Sinks:	None
Pure Water:	None
Hot/Cold Water:	None
Hose Bibb:	None
Floor Drain:	None
Waste:	None
Emer. Eyewash:	None
Emer. Station:	None
Gases:	
Comp. Air:	None
Lab Gas:	None
Vacuum:	None
CO^2:	None
Other Gas:	None
Fire Protection:	Sprinkler Heads

Equipment

Furniture

Type	Count	Status
18"x72" Side Table	1	3
30"x72" Table	4	3
Conference Chair	25	3
Trash/Recycle Bin	2	3

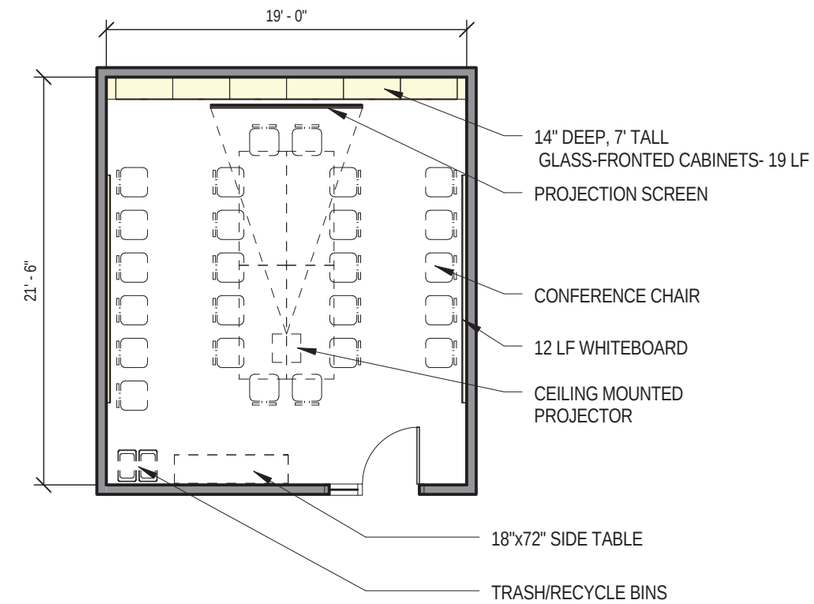

Status Key: **1** = Furnished and Installed by Contractor (CFCI), **2** = Furnished by Owner, Contractor Installed (OFCI), **3** = Furnished and Installed by Owner (OFOI), **4** = Provided Outside of Project Budget

Scale: 1/8" = 1'-0"

CRSA PAYETTE

1.2.3 Break Room

Room Data Sheet Detail

Department: 1.2 Administrative Support
Issue Date:
Room No: *NA*

Space Information

Room Function: *Break room for Biology Deaprtment faculty and staff*
Adjacencies: *Admin Suite, 1.2.1Large Conference Room*
Access: *Staff & Faculty*
Room Utilization *M-F 7:30 am - 10:30 pm*
General Notes:

Special Requirements

Lighting Controls: *See Proj. Standards, Ch. 3*
Acoustic Req: *See accoustics narrative, Ch. 4*
Structural Req: *None*
Security: *Unlocked*
Other Spec Req:

Room Size and Capacity

Proposed Area: *180*
Total Area: *180 SF*
Room Quantity: *2*
Assigned Cap: *0*
Unassigned Cap: *8*
Total Cap: *8*

Finishes, Doors and Windows

Floor: *Linoleum*
Base: *Rubber*
Walls: *Gypsum Board*
Wall Finish: *Paint - low v.o.c.*
Ceiling: *ACT (2'x2')*
Ceiling Height: *Varies*

Door Size: *3'-0" single leaf*
Door Type: *Wood*
Door Vis Panel: *Required*
Window Treat: *Light filtering or as noted*
Window Skylight: *None*

Casework and Built-ins

Wall Cabinets: *Wood*
Base Cabinets: *Wood*
Counter Tops: *Plastic Laminate*
Counter (LF): *12'-8"*
Counter Height: *34", UNO*

Shelving (LF): *None*
Drawer Units: *Yes*
White Boards: *No*
Tack Boards *No*
Proj. Screen: *No*

Communications

See Project Design Standards in Chapter 3 and electrical/telecomm narrative in Chapter 4

HVAC

Air Changes: *Ventilation Req'ments Only*
Air Circulation: *Air may be returned*
Pressure: *Negative to corridor*
Temperature: *72 deg F +/- 4 deg F*
Rel. Humidity: *55% Max, No Min.***
Local Exhaust: *Code minimum exhaust*
Air Filtration: *MERV 8 / MERV 13*
CO2 Sensor: *Yes*
Distribution: *Individual Tstat & VAV Box*
Other HVAC: *N/A*

Electrical

See Project Design Standards in Chapter 3 and electrical/telecomm narrative in Chapter 4

Plumbing

Sinks: *Yes*
Pure Water: *None*
Hot/Cold Water: *Yes*
Hose Bibb: *None*
Floor Drain: *None*
Waste: *Yes*
Emer. Eyewash: *None*
Emer. Station: *None*
Gases:
Comp. Air: *None*
Lab Gas: *None*
Vacuum: *None*
CO^2: *None*
Other Gas: *None*
Fire Protection: *Sprinkler Heads*

Equipment

Type	Count	Status
36"x30" Refrigerator	1	4
Dishwasher	1	4

Furniture

Type	Count	Status
36" dia. Round Table	2	3
Guest Chair	8	3
Trash/Recycle Bin	2	3

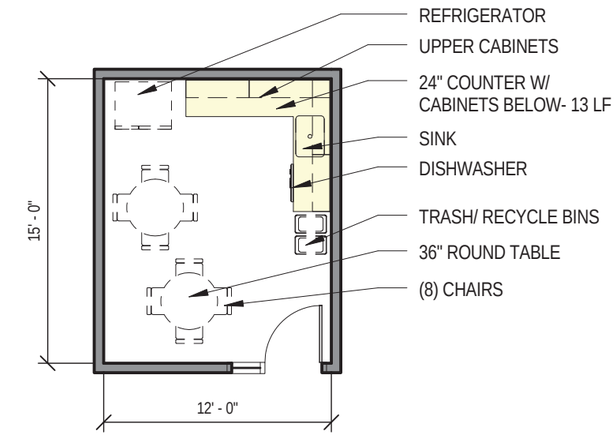

Status Key: **1** = Furnished and Installed by Contractor (CFCI), **2** = Furnished by Owner, Contractor Installed (OFCI), **3** = Furnished and Installed by Owner (OFOI), **4** = Provided Outside of Project Budget

Scale: 1/8" = 1'-0"

CRSA PAYETTE

1.2.4 Copy / Mail / Workroom

Room Data Sheet Detail

Department: 1.2 Administrative Support
Issue Date:
Room No: *NA*

Space Information

Room Function: *Break room for Biology Deaprtment faculty and staff*
Adjacencies:
Access:
Room Utilization
General Notes:

Special Requirements

Lighting Controls: *Dimmable*
Acoustic Req:
Structural Req:
Security:
Other Spec Req:

Room Size and Capacity

Proposed Area:	*240*
Total Area:	*180 SF*
Room Quantity:	*4*
Assigned Cap:	*0*
Unassigned Cap:	*2*
Total Cap:	*2*

Finishes, Doors and Windows

Floor:	*Carpet Tile*
Base:	*Rubber*
Walls:	*Gypsum Board*
Wall Finish:	*Paint - low v.o.c.*
Ceiling:	*ACT (2'x2')*
Ceiling Height:	*9'-0"*

Door Size:	*3'-0" single leaf*
Door Type:	*Wood*
Door Vis Panel:	*Required*
Window Treat:	*Light filtering or as noted*
Window Skylight:	*None*

Casework and Built-ins

Wall Cabinets:	*Wood*
Base Cabinets:	*Wood*
Counter Tops:	*Plastic Laminate*
Counter (LF):	*15'-0"*
Counter Height:	*34", UNO*

Shelving (LF):	*12'-0"*
Drawer Units:	
White Boards:	*No*
Tack Boards	*No*
Proj. Screen:	*No*

Communications

See Project Design Standards in Chapter 3 and electrical/telecomm narrative in Chapter 4

HVAC

Air Changes:	*Office Standard*
Air Circulation:	*Air must be exhausted*
Pressure:	*Negative to Corridor*
Temperature:	*Office Standard*
Rel. Humidity:	*Office Standard*
Local Exhaust:	*100% Exhaust*
Air Filtration:	*MERV 8 / MERV 13*
CO2 Sensor:	*No*
Distribution:	*Individual Tstat & VAV Box*
Other HVAC:	*N/A*

Electrical

See Project Design Standards in Chapter 3 and electrical/telecomm narrative in Chapter 4

Plumbing

Sinks:	*None*
Pure Water:	*None*
Hot/Cold Water:	*None*
Hose Bibb:	*None*
Floor Drain:	*None*
Waste:	*None*
Emer. Eyewash:	*None*
Emer. Station:	*None*
Gases:	
Comp. Air:	*None*
Lab Gas:	*None*
Vacuum:	*None*
CO^2:	*None*
Other Gas:	*None*
Fire Protection:	*Sprinkler Heads*

Equipment

Type	Count	Status
Copier	2	4

Furniture

Type	Count	Status
30"x60" Table	1	3
Trash/Recycle 23gal	2	3

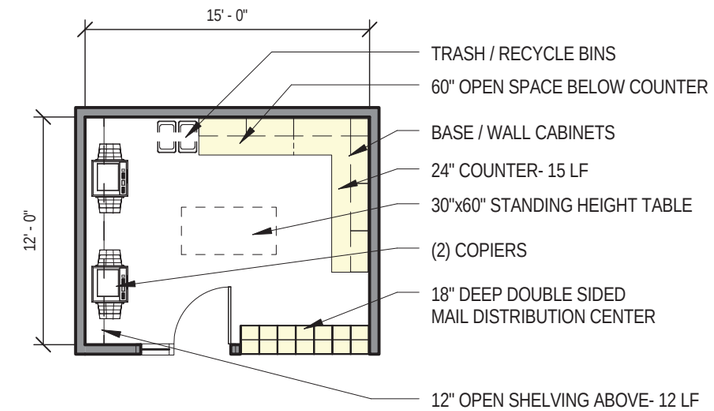

Status Key: **1** = Furnished and Installed by Contractor (CFCI), **2** = Furnished by Owner, Contractor Installed (OFCI), **3** = Furnished and Installed by Owner (OFOI), **4** = Provided Outside of Project Budget

Scale: 1/8" = 1'-0"

CRSA PAYETTE

1.2.5 Department Storage Room

Room Data Sheet Detail

Department: 1.2 Administrative Support
Issue Date:
Room No: *NA*

Space Information

Room Function: *Use for storage*
Adjacencies: *Admin Suite*
Access: *Staff only*
Room Utilization *M-F 7:30 am-10:30 pm*
General Notes:

Special Requirements

Lighting Controls: *See Proj. Standards, Ch. 3*
Acoustic Req: *See accoustics narrative, Ch. 4*
Structural Req: *None*
Security: *Locked*
Other Spec Req:

Room Size and Capacity

Proposed Area: *120*
Total Area: *120 SF*
Room Quantity: *1*
Assigned Cap: *0*
Unassigned Cap: *2*
Total Cap: *2*

Finishes, Doors and Windows

Floor: *Carpet Tile*
Base: *Rubber*
Walls: *Gypsum Board*
Wall Finish: *Paint - low v.o.c.*
Ceiling: *ACT (2'x2')*
Ceiling Height: *9'-0"*

Door Size: *3'-0" single leaf*
Door Type: *Wood*
Door Vis Panel: *Required*
Window Treat: *Light filtering or as noted*
Window Skylight: *None*

Casework and Built-ins

Wall Cabinets: *Wood*
Base Cabinets: *Wood*
Counter Tops: *Plastic Laminate*
Counter (LF): *18*
Counter Height: *34", UNO*

Shelving (LF): *6'-0"*
Drawer Units: *Yes*
White Boards: *None*
Tack Boards *None*
Proj. Screen: *None*

Communications

See Project Design Standards in Chapter 3 and electrical/telecomm narrative in Chapter 4

HVAC

Air Changes: *Ventilation Req'ments Only*
Air Circulation: *Air may be returned*
Pressure: *Neutral*
Temperature: *Office Standard*
Rel. Humidity: *Office Standard*
Local Exhaust: *No*
Air Filtration: *MERV 8 / MERV 13*
CO2 Sensor: *No*
Distribution: *Shared Tstat & VAV Box*
Other HVAC: *N/A*

Electrical

See Project Design Standards in Chapter 3 and electrical/telecomm narrative in Chapter 4

Plumbing

Sinks: *None*
Pure Water: *None*
Hot/Cold Water: *None*
Hose Bibb: *None*
Floor Drain: *None*
Waste: *None*
Emer. Eyewash: *None*
Emer. Station: *None*
Gases:
Comp. Air: *None*
Lab Gas: *None*
Vacuum: *None*
CO^2: *None*
Other Gas: *None*
Fire Protection: *Sprinkler Heads*

Equipment

Furniture

Type	Count	Status
30" Wide Shelving	2	3
42" Lateral File 5-Drawers	2	3

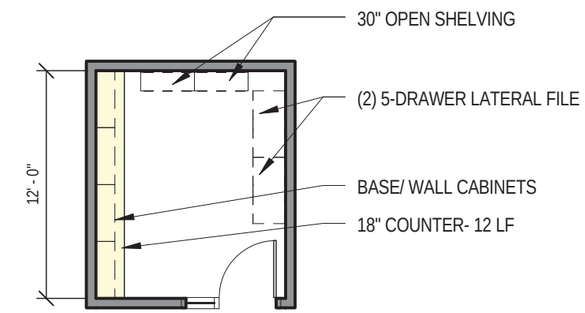

Status Key: **1** = Furnished and Installed by Contractor (CFCI), **2** = Furnished by Owner, Contractor Installed (OFCI), **3** = Furnished and Installed by Owner (OFOI), **4** = Provided Outside of Project Budget

Scale: 1/8" = 1'-0"

CRSA PAYETTE

1.2.6 IT Workroom

Room Data Sheet Detail

Department: 1.2 Administrative Support
Issue Date:
Room No: *NA*

Space Information

Room Function: *Workspace to support Biology Department IT needs*
Adjacencies: *IT Staff Office (1.1.5)*
Access: *Staff Only*
Room Utilization
General Notes:

Special Requirements

Lighting Controls: *Dimmable*
Acoustic Req:
Structural Req:
Security:
Other Spec Req:

Room Size and Capacity

Proposed Area: *120*
Total Area: *120 SF*
Room Quantity: *1*
Assigned Cap: *0*
Unassigned Cap: *2*
Total Cap: *2*

Finishes, Doors and Windows

Floor: *Carpet Tile*
Base: *Rubber*
Walls: *Gypsum Board*
Wall Finish: *Paint - low v.o.c.*
Ceiling: *ACT (2'x2')*
Ceiling Height: *9'-0"*

Door Size: *3'-0" single leaf*
Door Type: *Wood*
Door Vis Panel: *None*
Window Treat: *Light filtering*
Window Skylight: *None*

Casework and Built-ins

Wall Cabinets:
Base Cabinets:
Counter Tops:
Counter (LF):
Counter Height:

Shelving (LF): *20'-0"*
Drawer Units:
White Boards: *No*
Tack Boards *No*
Proj. Screen: *No*

Communications

See Project Design Standards in Chapter 3 and electrical/telecomm narrative in Chapter 4

HVAC

Air Changes: *Office Standard*
Air Circulation: *Air may be returned*
Pressure: *Neutral*
Temperature: *Office Standard*
Rel. Humidity: *Office Standard*
Local Exhaust: *No*
Air Filtration: *MERV 8 / MERV 13*
CO2 Sensor: *No*
Distribution: *Shared Tstat & VAV Box*
Other HVAC: *N/A*

Electrical

See Project Design Standards in Chapter 3 and electrical/telecomm narrative in Chapter 4

Plumbing

Sinks: *None*
Pure Water: *None*
Hot/Cold Water: *None*
Hose Bibb: *None*
Floor Drain: *None*
Waste: *None*
Emer. Eyewash: *None*
Emer. Station: *None*
Gases:
Comp. Air: *None*
Lab Gas: *None*
Vacuum: *None*
CO^2: *None*
Other Gas: *None*
Fire Protection: *Sprinkler Heads*

Equipment

Furniture

Type	Count	Status
7'x3' Racks	1	3
12" Deep Wall Mounted Shelves- 10 LF	1	3
24" Deep Wall Mounted Shelves- 11 LF	1	3
24" Worksurface- 10 LF	1	3

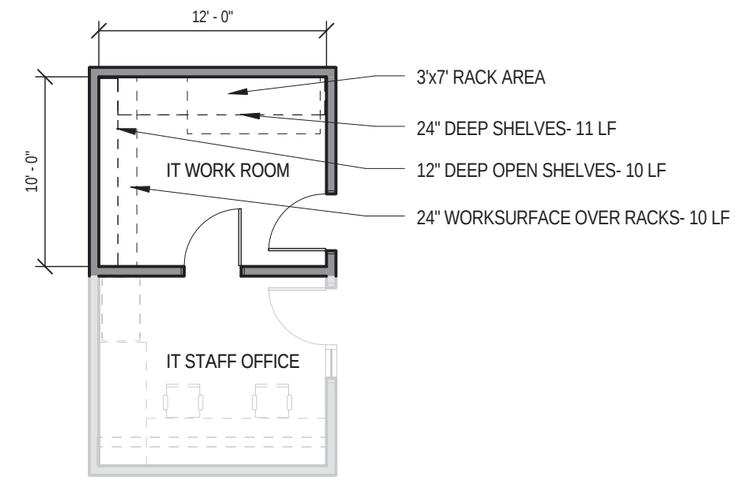

Status Key: **1** = Furnished and Installed by Contractor (CFCI), **2** = Furnished by Owner, Contractor Installed (OFCI), **3** = Furnished and Installed by Owner (OFOI), **4** = Provided Outside of Project Budget

Scale: 1/8" = 1'-0"

CRSA PAYETTE

2.1.1 Advising Center Reception

Room Data Sheet Detail

Department: 2.1 Department Advising Center
Issue Date:
Room No: *NA*

Space Information

Room Function: *Reception area for department advising office by peer advisor*
Adjacencies: *Directly off public corridor*
Access: *Public*
Room Utilization *M-F 8am-5pm*
General Notes:

Special Requirements

Lighting Controls:
Acoustic Req:
Structural Req:
Security:
Other Spec Req:

Room Size and Capacity

Proposed Area: *180*
Total Area: *209 SF*
Room Quantity: *1*
Assigned Cap: *1*
Unassigned Cap: *6*
Total Cap: *7*

Finishes, Doors and Windows

Floor: *Carpet Tile*
Base: *Rubber*
Walls: *Gypsum Board*
Wall Finish: *Paint - low v.o.c.*
Ceiling: *ACT 2'x2'*
Ceiling Height: *Varies*

Door Size: *3'-0" single leaf*
Door Type: *Wood*
Door Vis Panel: *Required*
Window Treat: *Light filtering*
Window Skylight: *None*

Casework and Built-ins

Wall Cabinets:
Base Cabinets:
Counter Tops: *No*
Counter (LF):
Counter Height:

Shelving (LF):
Drawer Units:
White Boards: *No*
Tack Boards *No*
Proj. Screen: *No*

Communications

See Project Design Standards in Chapter 3 and electrical/telecomm narrative in Chapter 4

HVAC

Air Changes: *Office Standard*
Air Circulation: *Air may be returned*
Pressure: *Neutral*
Temperature: *Office Standard*
Rel. Humidity: *Office Standard*
Local Exhaust: *No*
Air Filtration: *MERV 8 / MERV 13*
CO2 Sensor: *No*
Distribution: *Shared Tstat & VAV Box*
Other HVAC: *N/A*

Electrical

See Project Design Standards in Chapter 3 and electrical/telecomm narrative in Chapter 4

Plumbing

Sinks: *None*
Pure Water: *None*
Hot/Cold Water: *None*
Hose Bibb: *None*
Floor Drain: *None*
Waste: *None*
Emer. Eyewash: *None*
Emer. Station: *None*
Gases:
Comp. Air: *None*
Lab Gas: *None*
Vacuum: *None*
CO^2: *None*
Other Gas: *None*
Fire Protection: *Sprinkler Heads*

Equipment

Type	Count	Status
Office Computer	2	4

Type	Count	Status
24" Side Table	1	3
24"x72" Table	1	3
30" Worksurface- 5 LF	1	3
36" Brochure Rack	1	3
42" Lateral File 2-Drawers	1	3
Guest Chair	1	3
Lounge Chair	3	3

Furniture

Type	Count	Status
Task Chair	3	3
Trash/Recycle Bin	2	3

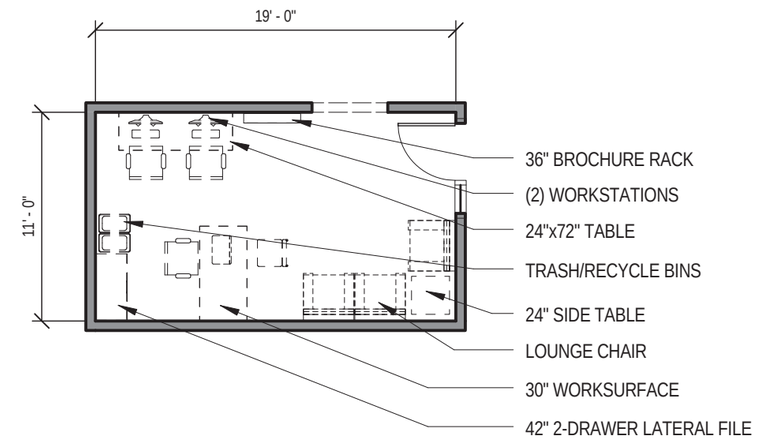

Status Key: **1** = Furnished and Installed by Contractor (CFCI), **2** = Furnished by Owner, Contractor Installed (OFCI), **3** = Furnished and Installed by Owner (OFOI), **4** = Provided Outside of Project Budget

Scale: 1/8" = 1'-0"

CRSA PAYETTE

2.1.2 Director of Undergraduate Studies Office

Room Data Sheet Detail

Department: 2.1 Department Advising Center
Issue Date:
Room No: *NA*

Space Information

Room Function: *Office for use by Director of Undergraduate Studies*
Adjacencies: *2.1.1 Advising Center Reception*
Access: *Staff & Faculty*
Room Utilization *M-F 8am-5pm*
General Notes:

Special Requirements

Lighting Controls: *See Proj. Standards, Ch. 3*
Acoustic Req: *See accoustics narrative, Ch. 4*
Structural Req: *None*
Security: *Locked*
Other Spec Req:

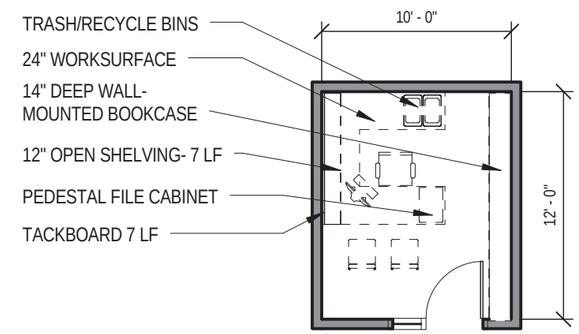

Room Size and Capacity

Proposed Area: *120*
Total Area: *120 SF*
Room Quantity: *1*
Assigned Cap: *1*
Unassigned Cap: *2*
Total Cap: *3*

Finishes, Doors and Windows

Floor: *Carpet Tile*
Base: *Rubber*
Walls: *Gypsum Board*
Wall Finish: *Paint - low v.o.c.*
Ceiling: *ACT 2'x2'*
Ceiling Height: *9'-0"*

Door Size: *3'-0" single leaf*
Door Type: *Wood*
Door Vis Panel: *Required*
Window Treat: *Light filtering*
Window Skylight: *None*

Casework and Built-ins

Wall Cabinets: *Wood*
Base Cabinets: *Wood*
Counter Tops: *None*
Counter (LF): *None*
Counter Height: *None*

Shelving (LF): *7'-0"*
Drawer Units: *None*
White Boards: *No*
Tack Boards *Yes*
Proj. Screen: *No*

Communications

See Project Design Standards in Chapter 3 and electrical/telecomm narrative in Chapter 4

HVAC

Air Changes: *Office Standard*
Air Circulation: *Air may be returned*
Pressure: *Neutral*
Temperature: *Office Standard*
Rel. Humidity: *Office Standard*
Local Exhaust: *No*
Air Filtration: *MERV 8 / MERV 13*
CO2 Sensor: *No*
Distribution: *Individual Tstat & VAV Box*
Other HVAC: *N/A*

Electrical

See Project Design Standards in Chapter 3 and electrical/telecomm narrative in Chapter 4

Plumbing

Sinks: *None*
Pure Water: *None*
Hot/Cold Water: *None*
Hose Bibb: *None*
Floor Drain: *None*
Waste: *None*
Emer. Eyewash: *None*
Emer. Station: *None*
Gases:
Comp. Air: *None*
Lab Gas: *None*
Vacuum: *None*
CO^2: *None*
Other Gas: *None*
Fire Protection: *Sprinkler Heads*

Equipment

Type	Count	Status
Office Computer	1	4

Furniture

Type	Count	Status
12" Deep Wall Mounted Shelves- 7 LF	1	3
14" Wall Mounted Bookcase- 12 LF	1	3
24" Worksurface- 16 LF	1	3
Guest Chair	2	3
Pedestal File Cabinet	1	3
Task Chair	1	3
Trash/Recycle Bin	2	3

Status Key: **1** = Furnished and Installed by Contractor (CFCI), **2** = Furnished by Owner, Contractor Installed (OFCI), **3** = Furnished and Installed by Owner (OFOI), **4** = Provided Outside of Project Budget

Scale: 1/8" = 1'-0"

CRSA PAYETTE

2.1.3 Biology Advisor Office

Room Data Sheet Detail

Department: 2.1 Department Advising Center
Issue Date:
Room No: *NA*

Space Information

Room Function: *Office for use by Biology Department advisor*
Adjacencies: *2.1.1 Advising Center Reception*
Access: *Staff only*
Room Utilization *M-F 8am-5pm*
General Notes:

Special Requirements

Lighting Controls: *See Proj. Standards, Ch. 3*
Acoustic Req: *See accoustics narrative, Ch. 4*
Structural Req: *None*
Security: *Locked*
Other Spec Req:

Room Size and Capacity

Proposed Area: *120*
Total Area: *120 SF*
Room Quantity: *1*
Assigned Cap: *1*
Unassigned Cap: *2*
Total Cap: *3*

Finishes, Doors and Windows

Floor: *Carpet Tile*
Base: *Rubber*
Walls: *Gypsum Board*
Wall Finish: *Paint - low v.o.c.*
Ceiling: *ACT 2'x2'*
Ceiling Height: *9'-0"*

Door Size: *3'-0" single leaf*
Door Type: *Wood*
Door Vis Panel: *Required*
Window Treat: *Light filtering*
Window Skylight: *None*

Casework and Built-ins

Wall Cabinets: *None*
Base Cabinets: *None*
Counter Tops: *None*
Counter (LF): *None*
Counter Height: *None*

Shelving (LF): *None*
Drawer Units: *None*
White Boards: *Yes, as shown*
Tack Boards *Yes*
Proj. Screen: *None*

Communications

See Project Design Standards in Chapter 3 and electrical/telecomm narrative in Chapter 4

HVAC

Air Changes: *Office Standard*
Air Circulation: *Air may be returned*
Pressure: *Neutral*
Temperature: *Office Standard*
Rel. Humidity: *Office Standard*
Local Exhaust: *No*
Air Filtration: *MERV 8 / MERV 13*
CO2 Sensor: *No*
Distribution: *Shared Tstat & VAV Box*
Other HVAC: *N/A*

Electrical

See Project Design Standards in Chapter 3 and electrical/telecomm narrative in Chapter 4

Plumbing

Sinks: *None*
Pure Water: *None*
Hot/Cold Water: *None*
Hose Bibb: *None*
Floor Drain: *None*
Waste: *None*
Emer. Eyewash: *None*
Emer. Station: *None*
Gases:
Comp. Air: *None*
Lab Gas: *None*
Vacuum: *None*
CO^2: *None*
Other Gas: *None*
Fire Protection: *Sprinkler Heads*

Equipment

Type	Count	Status
36" Flat Panel Monitor. Wall mounted	1	3

Furniture

Type	Count	Status
12" dia. Side Table	1	3
30" Worksurface- 10 LF	1	3
42" Lateral File 2-Drawers	1	3
Flipper Door Unit- 10 LF	1	3
Lounge Chair	3	3
Pedestal File Cabinet	2	3
Task Chair	1	3
Trash/Recycle Bin	2	3

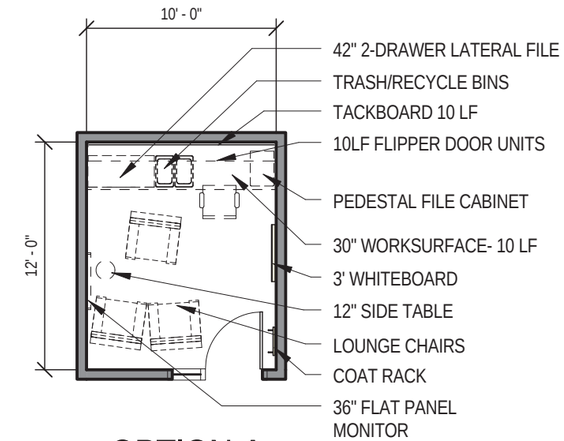

OPTION A

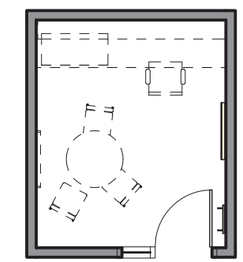

OPTION B

Status Key: **1** = Furnished and Installed by Contractor (CFCI), **2** = Furnished by Owner, Contractor Installed (OFCI), **3** = Furnished and Installed by Owner (OFOI), **4** = Provided Outside of Project Budget

Scale: 1/8" = 1'-0"

CRSA PAYETTE

2.1.4 Academic Advising Staff Office

Room Data Sheet Detail

Department: 2.1 Department Advising Center
Issue Date:
Room No: *4.205*

Space Information

Room Function: *Office for use by academic advising staff member*
Adjacencies: *2.1.1, 2.1.2, 2.1.3*
Access: *Public*
Room Utilization *M-F 8am-5pm*
General Notes:

Special Requirements

Lighting Controls:
Acoustic Req:
Structural Req:
Security:
Other Spec Req:

Room Size and Capacity

Proposed Area: *120*
Total Area: *120 SF*
Room Quantity: *1*
Assigned Cap: *1*
Unassigned Cap: *2*
Total Cap: *3*

Finishes, Doors and Windows

Floor: *Carpet Tile*
Base: *Rubber*
Walls: *Gypsum Board*
Wall Finish: *Paint - low v.o.c.*
Ceiling: *ACT 2'x2'*
Ceiling Height: *9'-0"*

Door Size: *3'-0" single leaf*
Door Type: *Wood*
Door Vis Panel: *Required*
Window Treat: *Light filtering*
Window Skylight: *None*

Casework and Built-ins

Wall Cabinets: *Wood*
Base Cabinets: *Wood*
Counter Tops: *Plastic Laminate*
Counter (LF): *9'-0"*
Counter Height: *34", UNO*

Shelving (LF):
Drawer Units:
White Boards: *No*
Tack Boards *Yes*
Proj. Screen: *No*

Communications

See Project Design Standards in Chapter 3 and electrical/telecomm narrative in Chapter 4

HVAC

Air Changes: *Office Standard*
Air Circulation: *Air may be returned*
Pressure: *Neutral*
Temperature: *Office Standard*
Rel. Humidity: *Office Standard*
Local Exhaust: *No*
Air Filtration: *MERV 8 / MERV 13*
CO2 Sensor: *No*
Distribution: *Shared Tstat & VAV Box*
Other HVAC: *N/A*

Electrical

See Project Design Standards in Chapter 3 and electrical/telecomm narrative in Chapter 4

Plumbing

Sinks: *None*
Pure Water: *None*
Hot/Cold Water: *None*
Hose Bibb: *None*
Floor Drain: *None*
Waste: *None*
Emer. Eyewash: *None*
Emer. Station: *None*
Gases:
Comp. Air: *None*
Lab Gas: *None*
Vacuum: *None*
CO^2: *None*
Other Gas: *None*
Fire Protection: *Sprinkler Heads*

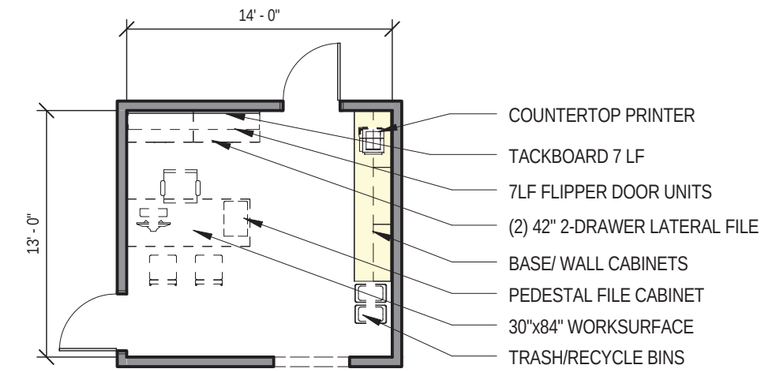

Equipment

Type	Count	Status
Countertop Printer	1	4
Office Computer	1	4

Furniture

Type	Count	Status
30"x84" Worksurface	1	3
42" Lateral File 2-Drawers	2	3
Flipper Door Unit- 7 LF	1	3
Guest Chair	2	3
Pedestal File Cabinet	1	3
Task Chair	1	3
Trash/Recycle Bin	2	3

Status Key: **1** = Furnished and Installed by Contractor (CFCI), **2** = Furnished by Owner, Contractor Installed (OFCI), **3** = Furnished and Installed by Owner (OFOI), **4** = Provided Outside of Project Budget

Scale: 1/8" = 1'-0"

CRSA PAYETTE

4.1.1 Faculty Office

Room Data Sheet Detail

Department: 4.1 Office
Issue Date:
Room No: *NA*

Space Information

Room Function: *Standard faculty office*
Adjacencies: *Near Associated Lab Space*
Access: *Faculty only*
Room Utilization *M-F 8am-5pm*
General Notes:

Special Requirements

Lighting Controls: *See Proj. Standards, Ch. 3*
Acoustic Req: *See accoustics narrative, Ch. 4*
Structural Req: *None*
Security: *Locked*
Other Spec Req:

Room Size and Capacity

Proposed Area: *120*
Total Area: *120 SF*
Room Quantity: *34*
Assigned Cap: *1*
Unassigned Cap: *2*
Total Cap: *3*

Finishes, Doors and Windows

Floor: *Carpet Tile*
Base: *Rubber*
Walls: *Gypsum Board*
Wall Finish: *Paint - low v.o.c.*
Ceiling: *ACT 2'x2'*
Ceiling Height: *9'-0"*

Door Size: *3'-0" single leaf*
Door Type: *Wood*
Door Vis Panel: *Required*
Window Treat: *Light filtering*
Window Skylight: *None*

Casework and Built-ins

Wall Cabinets: *None*
Base Cabinets: *None*
Counter Tops: *None*
Counter (LF): *None*
Counter Height: *None*

Shelving (LF): *Wood*
Drawer Units: *None*
White Boards: *None*
Tack Boards *Yes*
Proj. Screen: *None*

Communications

See Project Design Standards in Chapter 3 and electrical/telecomm narrative in Chapter 4

HVAC

Air Changes: *Office Standard*
Air Circulation: *Air may be returned*
Pressure: *Neutral*
Temperature: *Office Standard*
Rel. Humidity: *Office Standard*
Local Exhaust: *No*
Air Filtration: *MERV 8 / MERV 13*
CO2 Sensor: *No*
Distribution: *Shared Tstat & VAV Box*
Other HVAC: *N/A*

Electrical

See Project Design Standards in Chapter 3 and electrical/telecomm narrative in Chapter 4

Plumbing

Sinks: *None*
Pure Water: *None*
Hot/Cold Water: *None*
Hose Bibb: *None*
Floor Drain: *None*
Waste: *None*
Emer. Eyewash: *None*
Emer. Station: *None*
Gases:
Comp. Air: *None*
Lab Gas: *None*
Vacuum: *None*
CO^2: *None*
Other Gas: *None*
Fire Protection: *Sprinkler Heads*

Equipment

Type	Count	Status
Office Computer	1	4

Furniture

Type	Count	Status
12" Deep Wall Mounted Shelves- 7 LF	1	3
14" Wall Mounted Bookcase- 12 LF	1	3
24" Worksurface- 16 LF	1	3
Guest Chair	2	3
Pedestal File Cabinet	1	3
Task Chair	1	3
Trash/Recycle Bin	2	3

Status Key: **1** = Furnished and Installed by Contractor (CFCI), **2** = Furnished by Owner, Contractor Installed (OFCI), **3** = Furnished and Installed by Owner (OFOI), **4** = Provided Outside of Project Budget

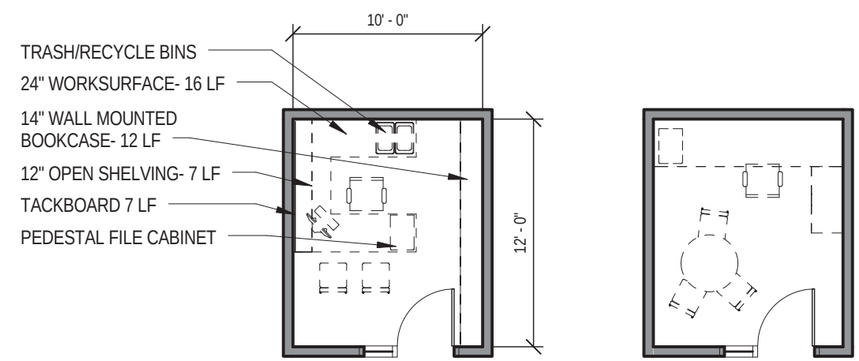

OPTION A

OPTION B

Scale: 1/8" = 1'-0"

CRSA PAYETTE

4.1.2 Adjunct / Visiting Faculty Office

Room Data Sheet Detail

Department: 4.1 Office
Issue Date:
Room No: *NA*

Space Information

Room Function: *Office for use by adjunct / visiting faculty members*
Adjacencies: *None*
Access: *Faculty only*
Room Utilization *M-F 8am-5pm*
General Notes:

Special Requirements

Lighting Controls: *See Proj. Standards, Ch. 3*
Acoustic Req: *See accoustics narrative, Ch. 4*
Structural Req: *None*
Security: *Unlocked*
Other Spec Req:

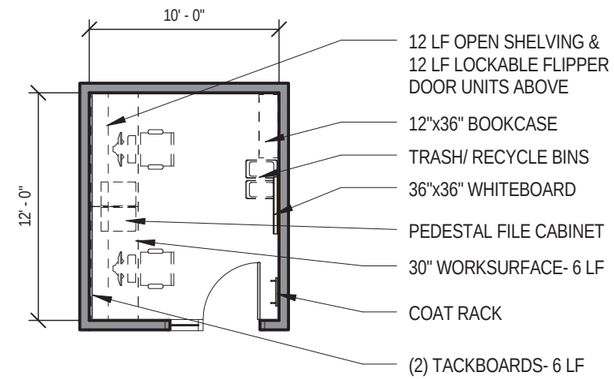

Room Size and Capacity

Proposed Area: *120*
Total Area: *120 SF*
Room Quantity: *10*
Assigned Cap: *1*
Unassigned Cap: *2*
Total Cap: *3*

Finishes, Doors and Windows

Floor: *Carpet Tile*
Base: *Rubber*
Walls: *Gypsum Board*
Wall Finish: *Paint - low v.o.c.*
Ceiling: *ACT 2'x2'*
Ceiling Height: *9'-0"*

Door Size: *3'-0" single leaf*
Door Type: *Wood*
Door Vis Panel: *Required*
Window Treat: *Light filtering*
Window Skylight: *None*

Casework and Built-ins

Wall Cabinets: *None*
Base Cabinets: *None*
Counter Tops: *None*
Counter (LF): *None*
Counter Height: *None*

Shelving (LF): *12'-0"*
Drawer Units: *None*
White Boards: *Yes, as shown*
Tack Boards *Yes*
Proj. Screen: *None*

Communications

See Project Design Standards in Chapter 3 and electrical/telecomm narrative in Chapter 4

HVAC

Air Changes: *Office Standard*
Air Circulation: *Air may be returned*
Pressure: *Neutral*
Temperature: *Office Standard*
Rel. Humidity: *Office Standard*
Local Exhaust: *No*
Air Filtration: *MERV 8 / MERV 13*
CO2 Sensor: *No*
Distribution: *Shared Tstat & VAV Box*
Other HVAC: *N/A*

Electrical

See Project Design Standards in Chapter 3 and electrical/telecomm narrative in Chapter 4

Plumbing

Sinks: *None*
Pure Water: *None*
Hot/Cold Water: *None*
Hose Bibb: *None*
Floor Drain: *None*
Waste: *None*
Emer. Eyewash: *None*
Emer. Station: *None*
Gases:
Comp. Air: *None*
Lab Gas: *None*
Vacuum: *None*
CO^2: *None*
Other Gas: *None*
Fire Protection: *Sprinkler Heads*

Equipment

Type	Count	Status
Office Computer	2	4

Furniture

Type	Count	Status
12"x36" Bookcase	1	3
30" Worksurface- 6 LF	2	3
Flipper Door Unit- 6 LF	2	3
Pedestal File Cabinet	2	3
Task Chair	2	3
Trash/Recycle Bin	2	3

Status Key: **1** = Furnished and Installed by Contractor (CFCI), **2** = Furnished by Owner, Contractor Installed (OFCI), **3** = Furnished and Installed by Owner (OFOI), **4** = Provided Outside of Project Budget

Scale: 1/8" = 1'-0"

CRSA PAYETTE

4.1.3 Emeritus / Post Doc Office

Room Data Sheet Detail

Department: 4.1 Office
Issue Date:
Room No: *NA*

Space Information

Room Function: *Shared office*
Adjacencies: *None*
Access: *Staff & Faculty*
Room Utilization *M-F 8am-5pm*
General Notes:

Special Requirements

Lighting Controls: *See Proj. Standards, Ch. 3*
Acoustic Req: *See accoustics narrative, Ch. 4*
Structural Req: *None*
Security: *Locked*
Other Spec Req:

Room Size and Capacity

Proposed Area: *120*
Total Area: *120 SF*
Room Quantity: *2*
Assigned Cap: *2*
Unassigned Cap: *0*
Total Cap: *0*

Finishes, Doors and Windows

Floor: *Carpet Tile*
Base: *Rubber*
Walls: *Gypsum Board*
Wall Finish: *Paint - low v.o.c.*
Ceiling: *ACT 2'x2'*
Ceiling Height: *9'-0"*

Door Size: *3'-0" single leaf*
Door Type: *Wood*
Door Vis Panel: *Required*
Window Treat: *Light filtering*
Window Skylight: *None*

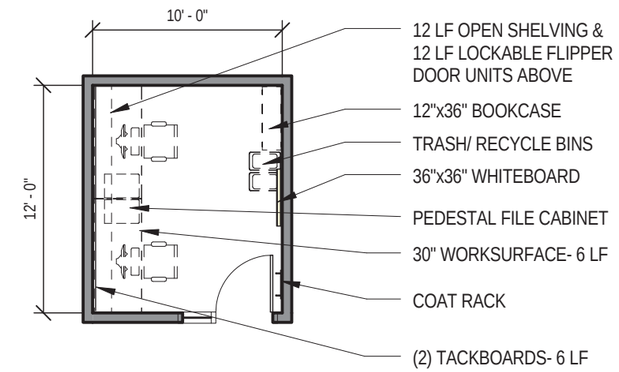

Casework and Built-ins

Wall Cabinets: *None*
Base Cabinets: *None*
Counter Tops: *None*
Counter (LF): *None*
Counter Height: *None*

Shelving (LF): *12'-0"*
Drawer Units: *None*
White Boards: *Yes, as shown*
Tack Boards *Yes*
Proj. Screen: *None*

Communications

See Project Design Standards in Chapter 3 and electrical/telecomm narrative in Chapter 4

HVAC

Air Changes: *Office Standard*
Air Circulation: *Air may be returned*
Pressure: *Neutral*
Temperature: *Office Standard*
Rel. Humidity: *Office Standard*
Local Exhaust: *No*
Air Filtration: *MERV 8 / MERV 13*
CO2 Sensor: *No*
Distribution: *Shared Tstat & VAV Box*
Other HVAC: *N/A*

Electrical

See Project Design Standards in Chapter 3 and electrical/telecomm narrative in Chapter 4

Plumbing

Sinks: *None*
Pure Water: *None*
Hot/Cold Water: *None*
Hose Bibb: *None*
Floor Drain: *None*
Waste: *None*
Emer. Eyewash: *None*
Emer. Station: *None*
Gases:
Comp. Air: *None*
Lab Gas: *None*
Vacuum: *None*
CO^2: *None*
Other Gas: *None*
Fire Protection: *Sprinkler Heads*

Equipment

Type	Count	Status
Office Computer	2	4

Furniture

Type	Count	Status
12"x36" Bookcase	1	3
30" Worksurface- 6 LF	2	3
Flipper Door Unit- 6 LF	2	3
Pedestal File Cabinet	2	3
Task Chair	2	3
Trash/Recycle Bin	2	3

Status Key: **1** = Furnished and Installed by Contractor (CFCI), **2** = Furnished by Owner, Contractor Installed (OFCI), **3** = Furnished and Installed by Owner (OFOI), **4** = Provided Outside of Project Budget

Scale: 1/8" = 1'-0"

CRSA PAYETTE

4.1.4 Graduate Assistant Office

Room Data Sheet Detail

Department: 4.1 Office
Issue Date:
Room No: *NA*

Space Information

Room Function: *Open workstation for graduate assistants*
Adjacencies: *Near Associated Lab Space*
Access: *Admin. Faculty Students*
Room Utilization *M-F 8am-5pm*
General Notes:

Special Requirements

Lighting Controls: *See Proj. Standards, Ch. 3*
Acoustic Req: *See accoustics narrative, Ch. 4*
Structural Req: *None*
Security: *Unlocked*
Other Spec Req:

Room Size and Capacity

Proposed Area: *60 SF per Student*
Total Area: *413 SF*
Room Quantity: *8*
Assigned Cap: *7*
Unassigned Cap: *0*
Total Cap: *7*

Finishes, Doors and Windows

Floor: *Carpet Tile*
Base: *Rubber*
Walls: *Gypsum Board*
Wall Finish: *Paint - low v.o.c.*
Ceiling: *ACT 2'x2'*
Ceiling Height: *9'-0"*

Door Size: *3'-0" single leaf*
Door Type: *Wood*
Door Vis Panel: *Required*
Window Treat: *Light filtering*
Window Skylight: *None*

Casework and Built-ins

Wall Cabinets: *None*
Base Cabinets: *None*
Counter Tops: *None*
Counter (LF): *None*
Counter Height: *None*

Shelving (LF): *None*
Drawer Units: *None*
White Boards: *Yes, as shown*
Tack Boards *Yes*
Proj. Screen: *None*

Communications

See Project Design Standards in Chapter 3 and electrical/telecomm narrative in Chapter 4

HVAC

Air Changes: *Office Standard*
Air Circulation: *Air may be returned*
Pressure: *Neutral*
Temperature: *Office Standard*
Rel. Humidity: *Office Standard*
Local Exhaust: *No*
Air Filtration: *MERV 8 / MERV 13*
CO2 Sensor: *No*
Distribution: *Individual Tstat & VAV Box*
Other HVAC: *N/A*

Electrical

See Project Design Standards in Chapter 3 and electrical/telecomm narrative in Chapter 4

Plumbing

Sinks: *None*
Pure Water: *None*
Hot/Cold Water: *None*
Hose Bibb: *None*
Floor Drain: *None*
Waste: *None*
Emer. Eyewash: *None*
Emer. Station: *None*
Gases:
Comp. Air: *None*
Lab Gas: *None*
Vacuum: *None*
CO^2: *None*
Other Gas: *None*
Fire Protection: *Sprinkler Heads*

Equipment

Type	Count	Status
Office Computer	7	4

Furniture

Type	Count	Status
24" Worksurface- 11 LF	7	3
Flipper Door Unit- 7 LF	7	3
Pedestal File Cabinet	7	3
Task Chair	7	3
Trash/Recycle Bin	4	3

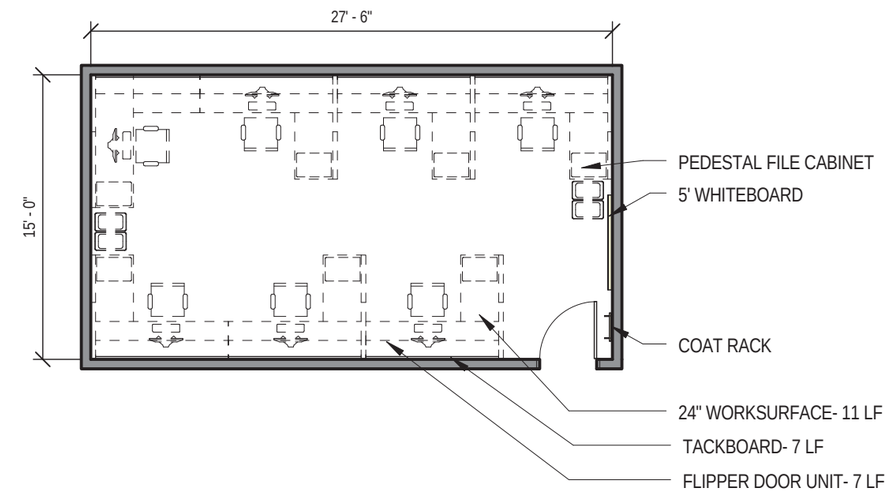

Status Key: **1** = Furnished and Installed by Contractor (CFCI), **2** = Furnished by Owner, Contractor Installed (OFCI), **3** = Furnished and Installed by Owner (OFOI), **4** = Provided Outside of Project Budget

Scale: 1/8" = 1'-0"

CRSA PAYETTE

4.1.4A Data Processing Space (3PI)

Room Data Sheet Detail

Department: Biology
Issue Date: WORK IN PROGRESS
Room No:

Space Information

Room Function: Data processing, grad student space
Adjacencies: See Adjacency Diagrams
Access: Students, Faculty
Room Utilization 24 hrs
General Notes:

Special Requirements

Lighting Controls: See Proj. Standards, Ch. 3
Acoustic Req: See acoustics narrative, Ch. 4
Structural Req: None
Security: Locked
Other Spec Req:

Room Size and Capacity

Proposed Area: Included in 4.1.4
Total Area: 209 SF
Room Quantity: 7
Assigned Cap: 0
Unassigned Cap: 6
Total Cap: 6

Finishes, Doors and Windows

Floor: Resilient Tile
Base: Resilient, Cove
Walls: Gyp. Bd.
Wall Finish: Paint
Ceiling: ACT (2'x2')
Ceiling Height:

Door Size: 3'-6" single leaf
Door Type: Wood
Door Vis Panel: Yes
Window Treat: Light filtering
Window Skylight: None

Casework and Built-ins

Wall Cabinets: None
Base Cabinets: None
Counter Tops: None
Counter (LF): See diagram
Counter Height: 36" UON

Shelving (LF): None
Drawer Units: None
White Boards: Yes, as noted
Tack Boards None
Proj. Screen: None

Communications

See Project Design Standards in Chapter 3 and electrical/telecomm narrative in Chapter 4

HVAC

Air Changes: Office Standard
Air Circulation: Office Standard
Pressure: Neutral
Temperature: Office Standard
Rel. Humidity: Office Standard
Local Exhaust: None
Air Filtration: MERV 8/MERV 13
CO2 Sensor: Yes
Distribution: Individual TStat and VAV Box
Other HVAC:

Electrical

See Project Design Standards in Chapter 3 and electrical/telecomm narrative in Chapter 4

Plumbing

Sinks: None
Pure Water: None
Hot/Cold Water: N/A
Hose Bibb: None
Floor Drain: None
Waste: None
Emer. Eyewash: None
Emer. Station: None
Gases:
- *Comp. Air:* None
- *Lab Gas:* None
- *Vacuum:* None
- *CO^2:* None
- *Other Gas:*

Fire Protection: Wet Sprinkler

Equipment

Type	Count	Status
Computer	6	4

Furniture

Type	Count	Status
24"x54" Table	6	3
Task Chair	6	3

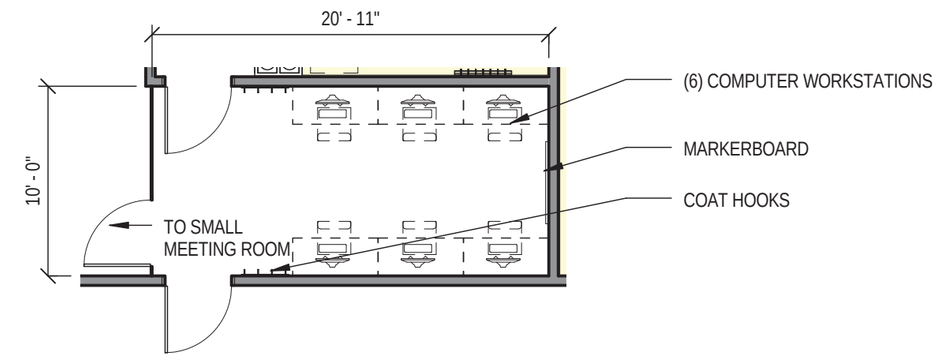

Status Key: **1** = Furnished and Installed by Contractor (CFCI), **2** = Furnished by Owner, Contractor Installed (OFCI), **3** = Furnished and Installed by Owner (OFOI), **4** = Provided Outside of Project Budget

Scale: 1/8" = 1'-0"

CRSA PAYETTE

4.1.4B Data Processing Space (2PI)

Room Data Sheet Detail

Department: Biology
Issue Date: WORK IN PROGRESS
Room No:

Space Information

Room Function: Data processing, grad student space
Adjacencies: See Adjacency Diagrams
Access: Students, Faculty
Room Utilization 24 hrs
General Notes:

Special Requirements

Lighting Controls: See Proj. Standards, Ch. 3
Acoustic Req: See acoustics narrative, Ch. 4
Structural Req: None
Security: Locked
Other Spec Req:

Room Size and Capacity

Proposed Area: Included in 4.1.4
Total Area: 131 SF
Room Quantity: 1
Assigned Cap: 0
Unassigned Cap: 3
Total Cap: 3

Finishes, Doors and Windows

Floor: Resilient Tile
Base: Resilient, Cove
Walls: Gyp. Bd.
Wall Finish: Paint
Ceiling: ACT (2'x2')
Ceiling Height:

Door Size: 3'-6" single leaf
Door Type: Wood
Door Vis Panel: Yes
Window Treat: Light-filtering
Window Skylight: None

Casework and Built-ins

Wall Cabinets: None
Base Cabinets: None
Counter Tops: None
Counter (LF): See diagram
Counter Height: 36" UON

Shelving (LF): None
Drawer Units: None
White Boards: None
Tack Boards None
Proj. Screen: None

Communications

See Project Design Standards in Chapter 3 and electrical/telecomm narrative in Chapter 4

HVAC

Air Changes: Office Standard
Air Circulation: Office Standard
Pressure: Neutral
Temperature: Office Standard
Rel. Humidity: Office Standard
Local Exhaust: None
Air Filtration: MERV 8/MERV 13
CO2 Sensor: Yes
Distribution: Individual TStat and VAV Box
Other HVAC:

Electrical

See Project Design Standards in Chapter 3 and electrical/telecomm narrative in Chapter 4

Plumbing

Sinks: None
Pure Water: None
Hot/Cold Water: None
Hose Bibb:
Floor Drain: None
Waste: None
Emer. Eyewash: None
Emer. Station: None
Gases:
- *Comp. Air:* None
- *Lab Gas:* None
- *Vacuum:* None
- *CO^2:* None
- *Other Gas:*

Fire Protection: Wet Sprinkler

Equipment

Type	Count	Status
Computer	3	4

Furniture

Type	Count	Status
24"x48" Table	2	3
24"x54" Table	1	3
Task Chair	3	3

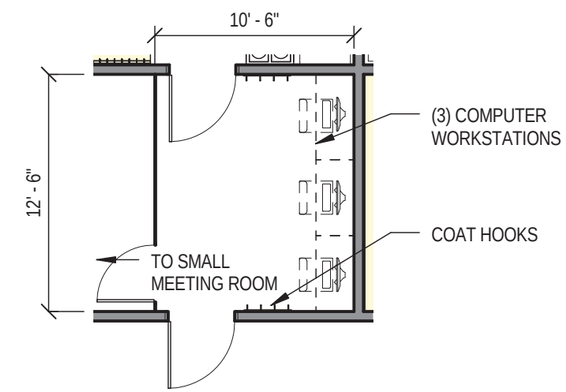

Status Key: **1** = Furnished and Installed by Contractor (CFCI), **2** = Furnished by Owner, Contractor Installed (OFCI), **3** = Furnished and Installed by Owner (OFOI), **4** = Provided Outside of Project Budget

Scale: 1/8" = 1'-0"

CRSA PAYETTE

4.2.1 Group Study - Small

Room Data Sheet Detail

Department: 4.2 Support
Issue Date:
Room No: *NA*

Space Information

Room Function: *Group study room*
Adjacencies: *None*
Access: *Faculty Students*
Room Utilization *M-F 7:30 am-10:30 pm*
General Notes:

Special Requirements

Lighting Controls: *See Proj. Standards, Ch. 3*
Acoustic Req: *See accoustics narrative, Ch. 4*
Structural Req: *None*
Security: *Unlocked*
Other Spec Req:

Room Size and Capacity

Proposed Area: *4000*
Total Area: *120 SF*
Room Quantity: *12*
Assigned Cap: *0*
Unassigned Cap: *5*
Total Cap: *5*

Finishes, Doors and Windows

Floor: *Carpet Tile*
Base: *Rubber*
Walls: *Gypsum Board*
Wall Finish: *Paint - low v.o.c.*
Ceiling: *ACT 2'x2'*
Ceiling Height: *9'-0"*

Door Size: *3'-0" single leaf*
Door Type: *Wood*
Door Vis Panel: *Required*
Window Treat: *Light filtering*
Window Skylight: *None*

Casework and Built-ins

Wall Cabinets: *None*
Base Cabinets: *None*
Counter Tops: *None*
Counter (LF): *None*
Counter Height: *None*

Shelving (LF): *None*
Drawer Units: *None*
White Boards: *Yes, as shown*
Tack Boards *None*
Proj. Screen: *None*

Communications

See Project Design Standards in Chapter 3 and electrical/telecomm narrative in Chapter 4

HVAC

Air Changes: *Conf. Rm. Standard*
Air Circulation: *Air may be returned*
Pressure: *Neutral*
Temperature: *Conf. Rm. Standard*
Rel. Humidity: *Conf. Rm. Standard*
Local Exhaust: *No*
Air Filtration: *MERV 8 / MERV 13*
CO2 Sensor: *No*
Distribution: *Individual Tstat & VAV Box*
Other HVAC: *N/A*

Electrical

See Project Design Standards in Chapter 3 and electrical/telecomm narrative in Chapter 4

Plumbing

Sinks: *None*
Pure Water: *None*
Hot/Cold Water: *None*
Hose Bibb: *None*
Floor Drain: *None*
Waste: *None*
Emer. Eyewash: *None*
Emer. Station: *None*
Gases:
Comp. Air: *None*
Lab Gas: *None*
Vacuum: *None*
CO^2: *None*
Other Gas: *None*
Fire Protection: *Sprinkler Heads*

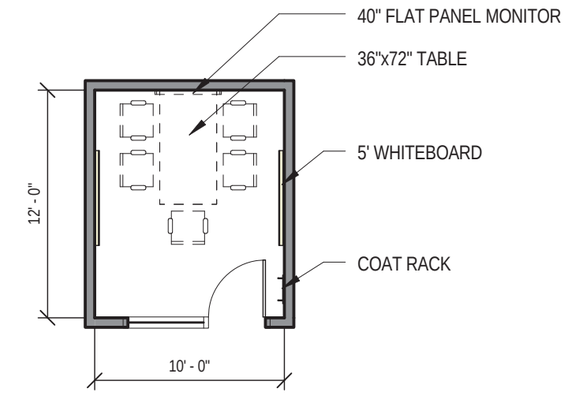

Equipment

Type	Count	Status
42" Flat Panel Monitor. Wall mounted	1	3

Furniture

Type	Count	Status
36"x72" Table	1	3
Group Study Chair	5	3

Status Key: **1** = Furnished and Installed by Contractor (CFCI), **2** = Furnished by Owner, Contractor Installed (OFCI), **3** = Furnished and Installed by Owner (OFOI), **4** = Provided Outside of Project Budget

Scale: 1/8" = 1'-0"

CRSA PAYETTE

4.2.2 Group Study - Large

Room Data Sheet Detail

Department: 4.2 Support
Issue Date:

Room No: *NA*

Space Information

Room Function: *Group study room*
Adjacencies: *None*
Access: *Staff only*
Room Utilization *M-F 7:30 am-10:30 pm*
General Notes:

Special Requirements

Lighting Controls: *See Proj. Standards, Ch. 3*
Acoustic Req: *See accoustics narrative, Ch. 4*
Structural Req: *None*
Security: *Unlocked*
Other Spec Req:

Room Size and Capacity

Proposed Area: *4000*
Total Area: *240 SF*
Room Quantity: *6*
Assigned Cap: *0*
Unassigned Cap: *8*
Total Cap: *8*

Finishes, Doors and Windows

Floor: *Carpet Tile*
Base: *Rubber*
Walls: *Gypsum Board*
Wall Finish: *Paint - low v.o.c.*
Ceiling: *ACT 2'x2'*
Ceiling Height: *9'-0"*

Door Size: *3'-0" single leaf*
Door Type: *Wood*
Door Vis Panel: *Required*
Window Treat: *Light filtering*
Window Skylight: *None*

Casework and Built-ins

Wall Cabinets: *None*
Base Cabinets: *None*
Counter Tops: *None*
Counter (LF): *None*
Counter Height: *None*

Shelving (LF): *None*
Drawer Units: *None*
White Boards: *Yes, as shown*
Tack Boards *None*
Proj. Screen: *None*

Communications

See Project Design Standards in Chapter 3 and electrical/telecomm narrative in Chapter 4

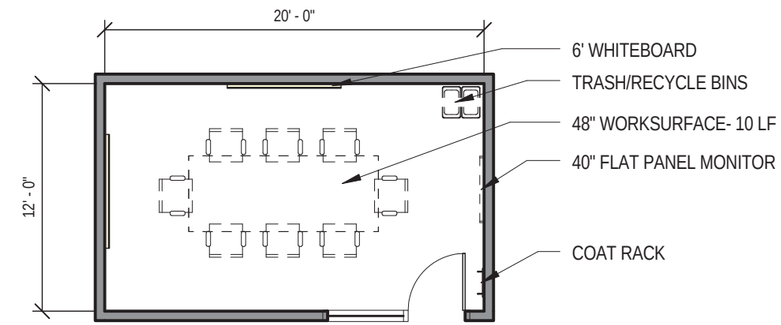

HVAC

Air Changes: *Conf. Rm. Standard*
Air Circulation: *Air may be returned*
Pressure: *Neutral*
Temperature: *Conf. Rm. Standard*
Rel. Humidity: *Conf. Rm. Standard*
Local Exhaust: *No*
Air Filtration: *MERV 8 / MERV 13*
CO2 Sensor: *Yes*
Distribution: *Individual Tstat & VAV Box*
Other HVAC: *N/A*

Electrical

See Project Design Standards in Chapter 3 and electrical/telecomm narrative in Chapter 4

Plumbing

Sinks: *None*
Pure Water: *None*
Hot/Cold Water: *None*
Hose Bibb: *None*
Floor Drain: *None*
Waste: *None*
Emer. Eyewash: *None*
Emer. Station: *None*
Gases:
Comp. Air: *None*
Lab Gas: *None*
Vacuum: *None*
CO^2: *None*
Other Gas: *None*
Fire Protection: *Sprinkler Heads*

Equipment

Type	Count	Status
42" Flat Panel Monitor. Wall mounted	1	3

Furniture

Type	Count	Status
48" Worktable- 10 LF	1	3
Group Study Chair	8	3
Trash/Recycle Bin	2	3

Status Key: **1** = Furnished and Installed by Contractor (CFCI), **2** = Furnished by Owner, Contractor Installed (OFCI), **3** = Furnished and Installed by Owner (OFOI), **4** = Provided Outside of Project Budget

Scale: 1/8" = 1'-0"

CRSA PAYETTE

4.2.3 Informal Student Lounge

Room Data Sheet Detail

Department: 4.2 Support
Issue Date:
Room No: *NA*

Space Information

Room Function: *Group study room*
Adjacencies: *Main Corridor / Lobby*
Access: *Faculty Students*
Room Utilization *M-F7:30 am-10:30 pm*
General Notes:

Special Requirements

Lighting Controls: *See Proj. Standards, Ch. 3*
Acoustic Req: *See accoustics narrative, Ch. 4*
Structural Req: *None*
Security: *Unlocked*
Other Spec Req:

Room Size and Capacity

Proposed Area: *4000*
Total Area: *176 SF*
Room Quantity: *6*
Assigned Cap: *0*
Unassigned Cap: *8*
Total Cap: *8*

Finishes, Doors and Windows

Floor: *Carpet Tile*
Base: *Rubber*
Walls: *Gypsum Board*
Wall Finish: *Paint - low v.o.c.*
Ceiling: *ACT 2'x2'*
Ceiling Height: *9'-0"*

Door Size: *3'-0" single leaf*
Door Type: *Wood*
Door Vis Panel: *Required*
Window Treat: *Light filtering*
Window Skylight: *None*

Casework and Built-ins

Wall Cabinets: *None*
Base Cabinets: *None*
Counter Tops: *None*
Counter (LF): *None*
Counter Height: *None*

Shelving (LF): *None*
Drawer Units: *None*
White Boards: *Yes, as shown*
Tack Boards *None*
Proj. Screen: *None*

Communications

See Project Design Standards in Chapter 3 and electrical/telecomm narrative in Chapter 4

HVAC

Air Changes: *Office Standard*
Air Circulation: *Air may be returned*
Pressure: *Neutral*
Temperature: *Office Standard*
Rel. Humidity: *Office Standard*
Local Exhaust: *No*
Air Filtration: *MERV 8 / MERV 13*
CO2 Sensor: *No*
Distribution: *Shared Tstat & VAV Box*
Other HVAC: *N/A*

Electrical

See Project Design Standards in Chapter 3 and electrical/telecomm narrative in Chapter 4

Plumbing

Sinks: *None*
Pure Water: *None*
Hot/Cold Water: *None*
Hose Bibb: *None*
Floor Drain: *None*
Waste: *None*
Emer. Eyewash: *None*
Emer. Station: *None*
Gases:
Comp. Air: *None*
Lab Gas: *None*
Vacuum: *None*
CO^2: *None*
Other Gas: *None*
Fire Protection: *Sprinkler Heads*

Equipment

Furniture

Type	Count	Status
36"dia. Round Table	1	3
36"x96" Table	1	3
Bench Seat	2	3
Lounge Chair	4	3

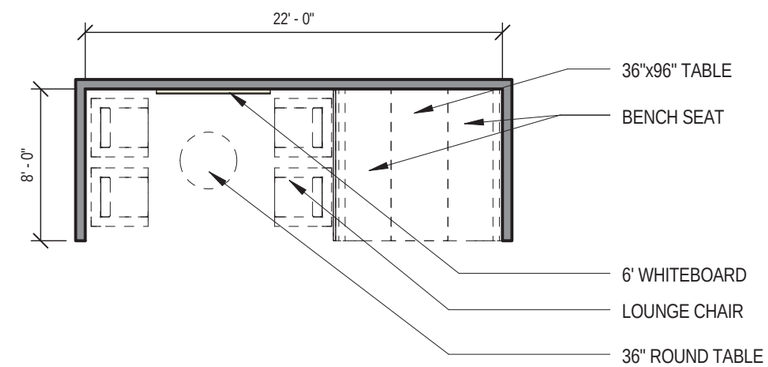

Status Key: **1** = Furnished and Installed by Contractor (CFCI), **2** = Furnished by Owner, Contractor Installed (OFCI), **3** = Furnished and Installed by Owner (OFOI), **4** = Provided Outside of Project Budget

Scale: 1/8" = 1'-0"

CRSA PAYETTE

4.2.4 Biology Tutoring Room

Room Data Sheet Detail

Department: 4.2 Support
Issue Date:
Room No: *NA*

Space Information

Room Function: *Classroom*
Adjacencies: *6.1.1, 6.1.2, 6.1.3, 6.1.4*
Access: *Admin. Faculty Students*
Room Utilization *M-F 7:30 am-10:30 pm*
General Notes:

Special Requirements

Lighting Controls: *See Proj. Standards, Ch. 3*
Acoustic Req: *See accoustics narrative, Ch. 4*
Structural Req: *None*
Security: *Locked*
Other Spec Req:

Room Size and Capacity

Proposed Area: *660*
Total Area: *660 SF*
Room Quantity: *1*
Assigned Cap: *0*
Unassigned Cap: *30*
Total Cap: *30*

Finishes, Doors and Windows

Floor: *Linoleum*
Base: *Rubber*
Walls: *Gypsum Board*
Wall Finish: *Paint - low v.o.c.*
Ceiling: *ACT (2'x2')*
Ceiling Height: *Varies*

Door Size: *3'-0" single leaf*
Door Type: *Wood*
Door Vis Panel: *Required*
Window Treat: *Room darkening*
Window Skylight: *None*

Casework and Built-ins

Wall Cabinets: *None*
Base Cabinets: *None*
Counter Tops: *None*
Counter (LF): *None*
Counter Height: *None*

Shelving (LF): *None*
Drawer Units: *None*
White Boards: *Yes, as shown*
Tack Boards *None*
Proj. Screen: *None*

Communications

See Project Design Standards in Chapter 3 and electrical/telecomm narrative in Chapter 4

HVAC

Air Changes: *Classroom Standard*
Air Circulation: *Air may be returned*
Pressure: *Neutral*
Temperature: *Classroom Standard*
Rel. Humidity: *Classroom Standard*
Local Exhaust: *No*
Air Filtration: *MERV 8 / MERV 13*
CO2 Sensor: *Yes*
Distribution: *Individual Tstat & VAV Box*
Other HVAC: *N/A*

Electrical

See Project Design Standards in Chapter 3 and electrical/telecomm narrative in Chapter 4

Plumbing

Sinks: *None*
Pure Water: *None*
Hot/Cold Water: *None*
Hose Bibb: *None*
Floor Drain: *None*
Waste: *None*
Emer. Eyewash: *None*
Emer. Station: *None*
Gases:
Comp. Air: *None*
Lab Gas: *None*
Vacuum: *None*
CO^2: *None*
Other Gas: *None*
Fire Protection: *Sprinkler Heads*

Equipment

Furniture

Type	Count	Status
18"x30" Lockable Metal Cabinets	4	3
24"x84" Table	4	3
36"x72" Table	6	3
Chair	30	3
Trash/Recycle Bin	2	3

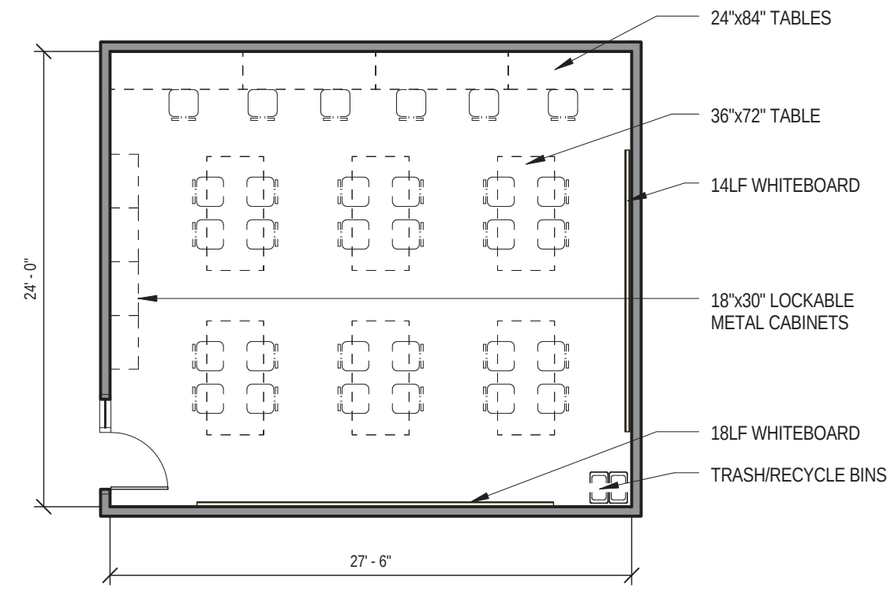

Status Key: **1** = Furnished and Installed by Contractor (CFCI), **2** = Furnished by Owner, Contractor Installed (OFCI), **3** = Furnished and Installed by Owner (OFOI), **4** = Provided Outside of Project Budget

Scale: 1/8" = 1'-0"

CRSA PAYETTE

4.2.5 Tutoring Room - Small (10-12 Students)

Room Data Sheet Detail

Department: Biology
Issue Date: WORK IN PROGRESS
Room No:

Space Information

Room Function:
Adjacencies: *See Adjacency Diagrams*
Access:
Room Utilization
General Notes:

Special Requirements

Lighting Controls: *See Proj. Standards, Ch. 3*
Acoustic Req: *See acoustics narrative, Ch. 4*
Structural Req: *None*
Security: *Locked*
Other Spec Req:

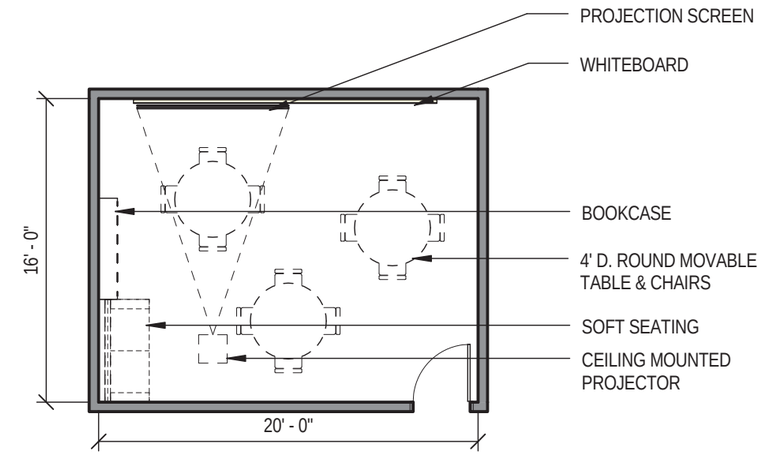

Room Size and Capacity

Proposed Area:	*320 SF*
Total Area:	*320 SF*
Room Quantity:	*1*
Assigned Cap:	*0*
Unassigned Cap:	*12*
Total Cap:	*12*

Finishes, Doors and Windows

Floor:	*Resilient Tile*	*Door Size:*	*3'-6" single leaf*
Base:	*Resilient, Cove*	*Door Type:*	*Wood*
Walls:	*Gyp. Bd.*	*Door Vis Panel:*	*Yes*
Wall Finish:	*Paint*	*Window Treat:*	*Light-filtering*
Ceiling:	*ACT (2'x2')*	*Window Skylight:*	*None*
Ceiling Height:	*Varies*		

Casework and Built-ins

Wall Cabinets:	*None*	*Shelving (LF):*	*None*
Base Cabinets:	*None*	*Drawer Units:*	*None*
Counter Tops:	*None*	*White Boards:*	*Yes, as noted*
Counter (LF):	*See diagram*	*Tack Boards*	*None*
Counter Height:	*36" UON*	*Proj. Screen:*	*Yes, as noted*

Communications

See Project Design Standards in Chapter 3 and electrical/telecomm narrative in Chapter 4

HVAC

Air Changes:	*Classroom Standard*
Air Circulation:	*Air may be returned*
Pressure:	*Neutral*
Temperature:	*Classroom Standard*
Rel. Humidity:	*Classroom Standard*
Local Exhaust:	*None*
Air Filtration:	*MERV 8/MERV 13*
CO2 Sensor:	*Yes*
Distribution:	*Individual TStat and VAV Box*
Other HVAC:	

Electrical

See Project Design Standards in Chapter 3 and electrical/telecomm narrative in Chapter 4

Plumbing

Sinks:	*None*
Pure Water:	*None*
Hot/Cold Water:	*None*
Hose Bibb:	*None*
Floor Drain:	*None*
Waste:	*None*
Emer. Eyewash:	*None*
Emer. Station:	*None*
Gases:	
Comp. Air:	*None*
Lab Gas:	*None*
Vacuum:	*None*
CO^2:	*None*
Other Gas:	
Fire Protection:	*Wet Sprinkler*

Equipment

Type	Count	Status

Furniture

Type	Count	Status
48" Diameter Table	3	3
Bookcase	1	3
Chair	12	3
Lounge	1	3

Status Key: **1** = Furnished and Installed by Contractor (CFCI), **2** = Furnished by Owner, Contractor Installed (OFCI), **3** = Furnished and Installed by Owner (OFOI), **4** = Provided Outside of Project Budget

Scale: 1/8" = 1'-0"

CRSA PAYETTE

4.2.6 Lobby / Poster Session Pinup

Room Data Sheet Detail

Department: 4.2 Support
Issue Date:

Room No: *NA*

Space Information

Room Function: *Building entry lobby & flexible space for poster session pinup*
Adjacencies: *2.1.1, 4.2.3*
Access: *Public*
Room Utilization *M-F 7:30 am-10:30 pm*
General Notes:

Special Requirements

Lighting Controls: *See Proj. Standards, Ch. 3*
Acoustic Req: *See accoustics narrative, Ch. 4*
Structural Req: *None*
Security: *Locked entry door*
Other Spec Req:

Room Size and Capacity

Proposed Area: *1200*
Total Area: *1200 SF*
Room Quantity: *1*
Assigned Cap: *0*
Unassigned Cap: *18*
Total Cap: *18*

Finishes, Doors and Windows

Floor: *Linoleum*
Base: *Rubber*
Walls: *Gypsum Board*
Wall Finish: *Paint - low v.o.c.*
Ceiling: *ACT (2'x2')*
Ceiling Height: *Varies*

Door Size: *3'-0" single leaf*
Door Type:
Door Vis Panel: *Required*
Window Treat:
Window Skylight: *none*

Casework and Built-ins

Wall Cabinets: *None*
Base Cabinets: *None*
Counter Tops: *None*
Counter (LF): *19*
Counter Height: *34" U.NO.*

Shelving (LF): *None*
Drawer Units: *None*
White Boards: *Yes, as shown*
Tack Boards *None*
Proj. Screen: *None*

Communications

See Project Design Standards in Chapter 3 and electrical/telecomm narrative in Chapter 4

HVAC

Air Changes: *Code req'd ventilation*
Air Circulation: *Air may be returned*
Pressure: *Neutral*
Temperature: *72 deg F +/- 4 deg F*
Rel. Humidity: *60% Rh Max*
Local Exhaust: *No*
Air Filtration: *MERV 8 / MERV 13*
CO2 Sensor: *No*
Distribution: *Individual Tstat & VAV Box*
Other HVAC: *N/A*

Electrical

See Project Design Standards in Chapter 3 and electrical/telecomm narrative in Chapter 4

Plumbing

Sinks: *None*
Pure Water: *None*
Hot/Cold Water: *None*
Hose Bibb: *None*
Floor Drain: *None*
Waste: *None*
Emer. Eyewash: *None*
Emer. Station: *None*
Gases:
Comp. Air: *None*
Lab Gas: *None*
Vacuum: *None*
CO^2: *None*
Other Gas: *None*
Fire Protection: *Sprinkler Heads*

Equipment

Furniture

Type	Count	Status
18"x36" Ottoman	2	3
24" dia. Ottoman	3	3
Bar Stool	6	3
Lounge Chair	12	3

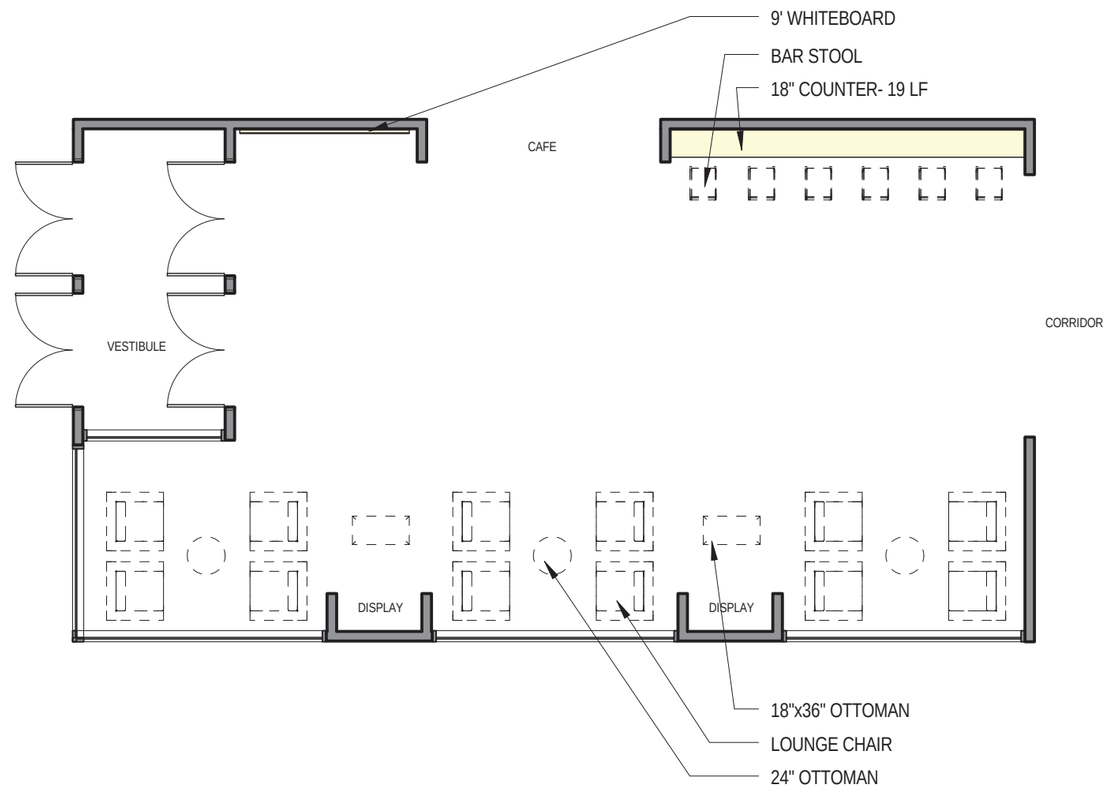

Status Key: **1** = Furnished and Installed by Contractor (CFCI), **2** = Furnished by Owner, Contractor Installed (OFCI), **3** = Furnished and Installed by Owner (OFOI), **4** = Provided Outside of Project Budget

Scale: 1/8" = 1'-0"

CRSA PAYETTE

BLANK PAGE

4.2.7 BNR Lobby Addition

Room Data Sheet Detail

Department: 4.2 Support
Issue Date:

Room No: *NS*

Space Information

Room Function: *Building entry lobby addition*
Adjacencies: *None*
Access: *Public*
Room Utilization *7:30 a.m. to 10:30 p.m.*
General Notes:

Special Requirements

Lighting Controls: *See Proj. Standards, Ch. 3*
Acoustic Req: *See accoustics narrative, Ch. 4*
Structural Req: *None*
Security: *Locked entry door*
Other Spec Req:

Room Size and Capacity

Proposed Area: *2000*
Total Area: *3632 SF*
Room Quantity: *1*
Assigned Cap: *0*
Unassigned Cap: *38*
Total Cap: *38*

Finishes, Doors and Windows

Floor: *Linoleum*
Base: *Rubber*
Walls: *Gypsum Board*
Wall Finish: *Paint - low v.o.c.*
Ceiling: *ACT (2'x2')*
Ceiling Height: *Varies*

Door Size: *3'-0" single leaf*
Door Type:
Door Vis Panel: *Required*
Window Treat:
Window Skylight: *none*

Casework and Built-ins

Wall Cabinets: *None*
Base Cabinets: *None*
Counter Tops: *None*
Counter (LF): *14'*
Counter Height: *34" U.N.O.*

Shelving (LF): *None*
Drawer Units: *None*
White Boards: *None*
Tack Boards *None*
Proj. Screen: *None*

Communications

See Project Design Standards in Chapter 3 and electrical/telecomm narrative in Chapter 4

HVAC

Air Changes: *Code req'd ventilation*
Air Circulation: *Air may be returned*
Pressure: *Neutral*
Temperature: *72 deg F +/- 4 deg F*
Rel. Humidity: *60% Rh Max*
Local Exhaust: *No*
Air Filtration: *MERV 8 / MERV 13*
CO2 Sensor: *No*
Distribution: *Individual Tstat & VAV Box*
Other HVAC: *N/A*

Electrical

See Project Design Standards in Chapter 3 and electrical/telecomm narrative in Chapter 4

Plumbing

Sinks: *None*
Pure Water: *None*
Hot/Cold Water: *None*
Hose Bibb: *None*
Floor Drain: *None*
Waste: *None*
Emer. Eyewash: *None*
Emer. Station: *None*
Gases:
Comp. Air: *None*
Lab Gas: *None*
Vacuum: *None*
CO^2: *None*
Other Gas: *None*
Fire Protection: *Sprinkler Heads*

Equipment

Furniture

Type	Count	Status
24" dia. Ottoman	6	3
36" Square Table	2	3
48" Bench	5	3
Bar Stool	5	3
Lounge Chair	28	3

Status Key: **1** = Furnished and Installed by Contractor (CFCI), **2** = Furnished by Owner, Contractor Installed (OFCI), **3** = Furnished and Installed by Owner (OFOI), **4** = Provided Outside of Project Budget

CRSA PAYETTE

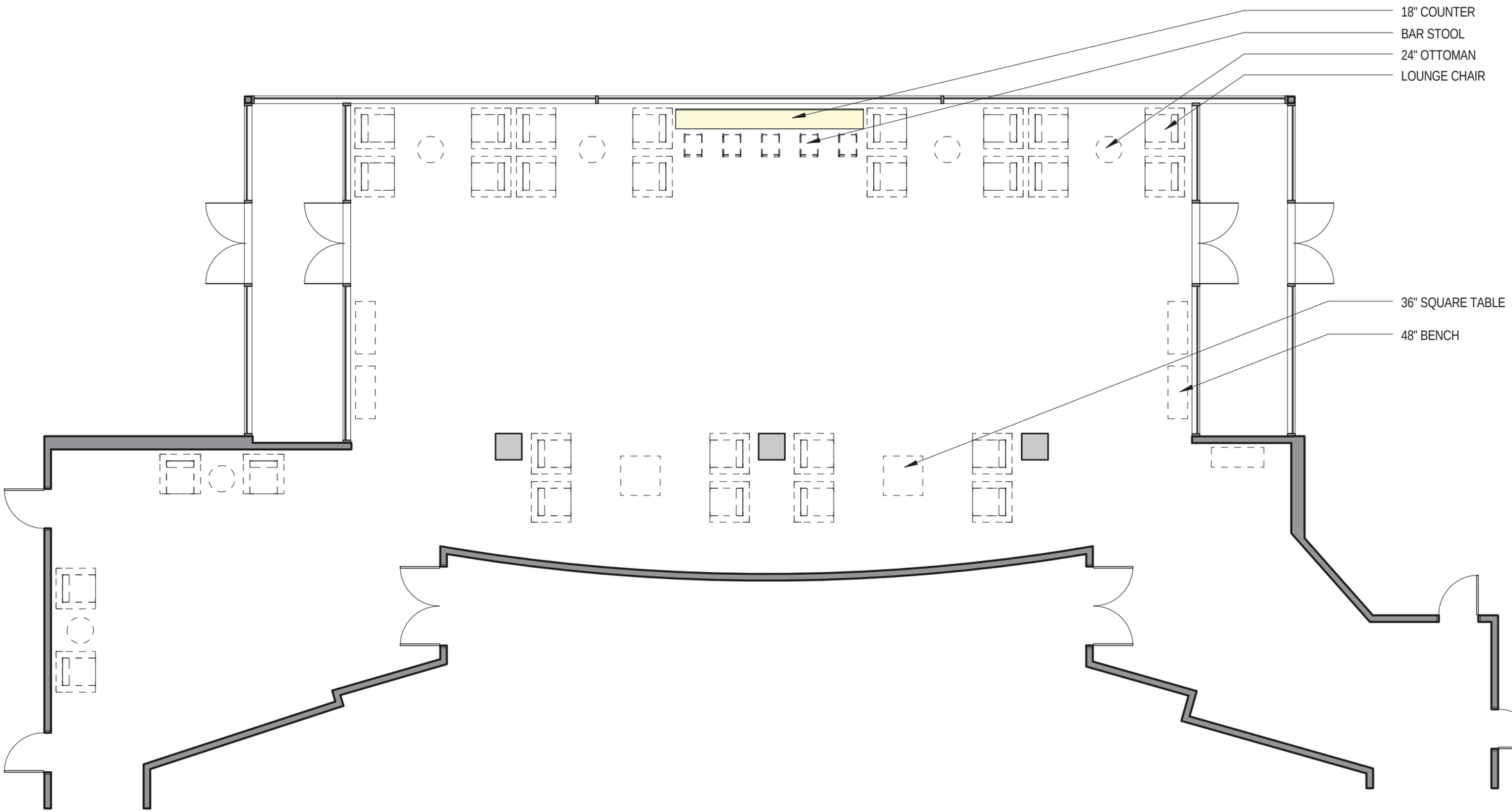

Scale: 1/8" = 1'-0"

CRSA PAYETTE

5.1.1 RESEARCH LAB SUITE
GENERIC START-UP LAB. BASED ON INTERVIEWS WITH BECKMAN AND MESSINA
PRIMARY USER OF SUPPORT ROOM IS INDICATED IN PARENTHESIS

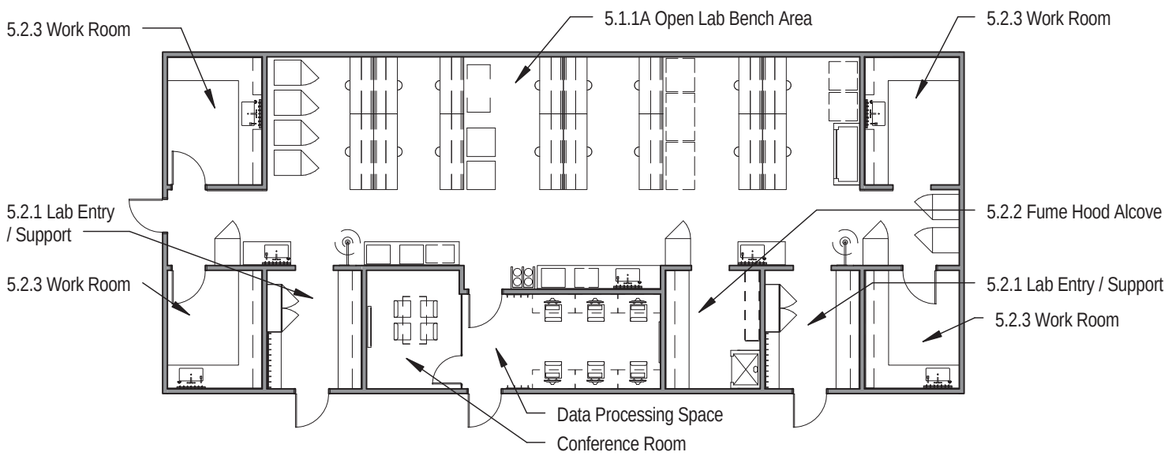

5.1.3 RESEARCH LAB SUITE
BASED ON INTERVIEWS WITH RAMIREZ, ALSTON, EVANS
PRIMARY USER OF SUPPORT ROOM IS INDICATED IN PARENTHESIS

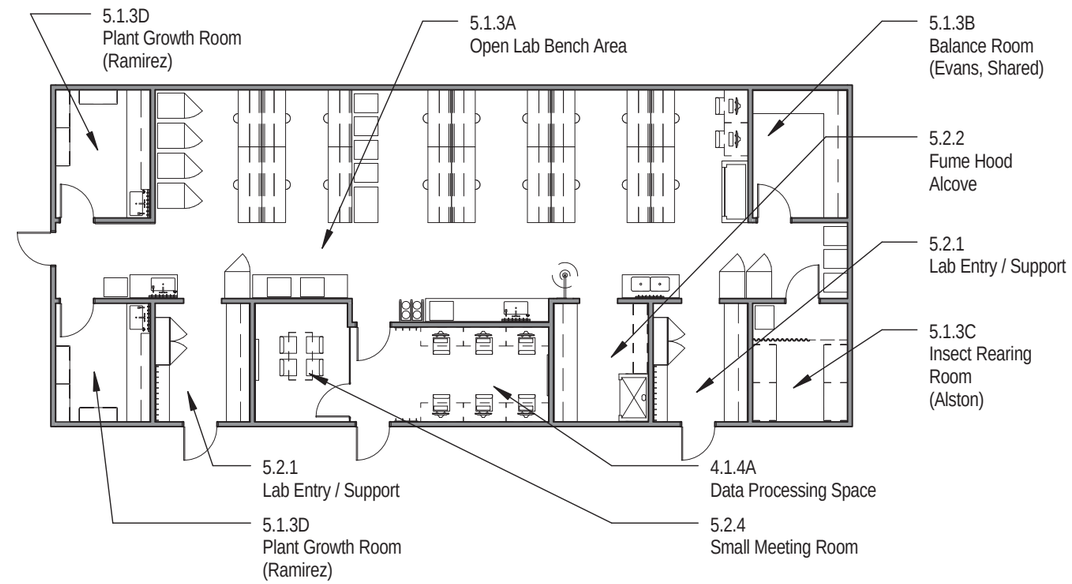

5.1.2 RESEARCH LAB SUITE
BASED ON INTERVIEWS WITH BRODIE, FRENCH, SAVITZKY
PRIMARY USER OF SUPPORT ROOM IS INDICATED IN PARENTHESIS

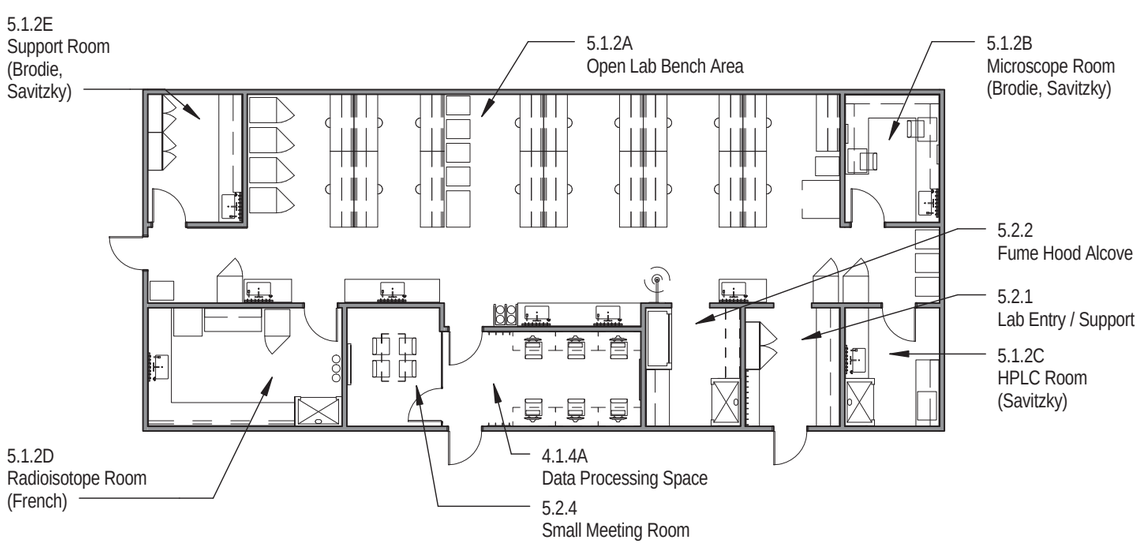

5.1.4 RESEARCH LAB SUITE
BASED ON INTERVIEWS WITH BAKER, STARK
PRIMARY USER OF SUPPORT ROOM IS INDICATED IN PARENTHESIS

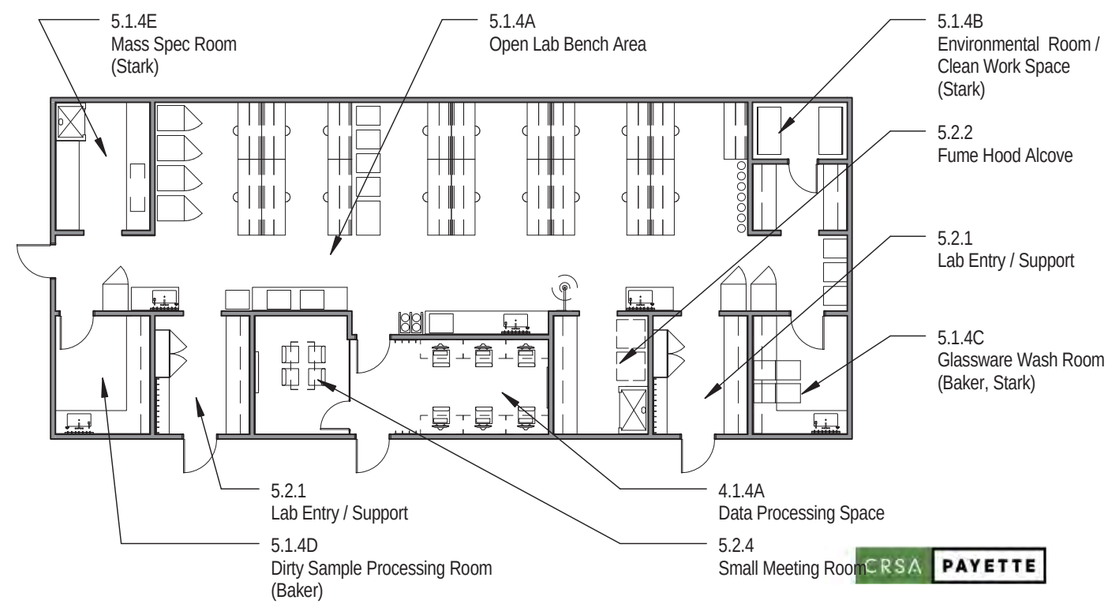

5.1.5 RESEARCH LAB SUITE
BASED ON INTERVIEWS WITH VON DOHLEN, WOLF
PRIMARY USER OF SUPPORT ROOM IS INDICATED IN PARENTHESIS

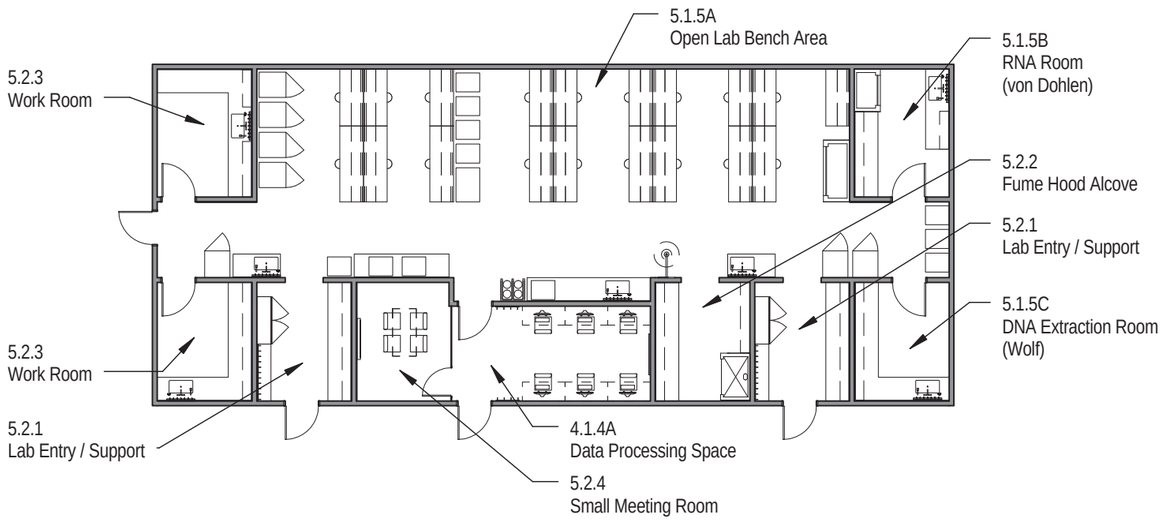

5.1.7 RESEARCH LAB SUITE
BASED ON INTERVIEWS WITH KAPHEIM, BERNHARDT, GOMPERT
PRIMARY USER OF SUPPORT ROOM IS INDICATED IN PARENTHESIS

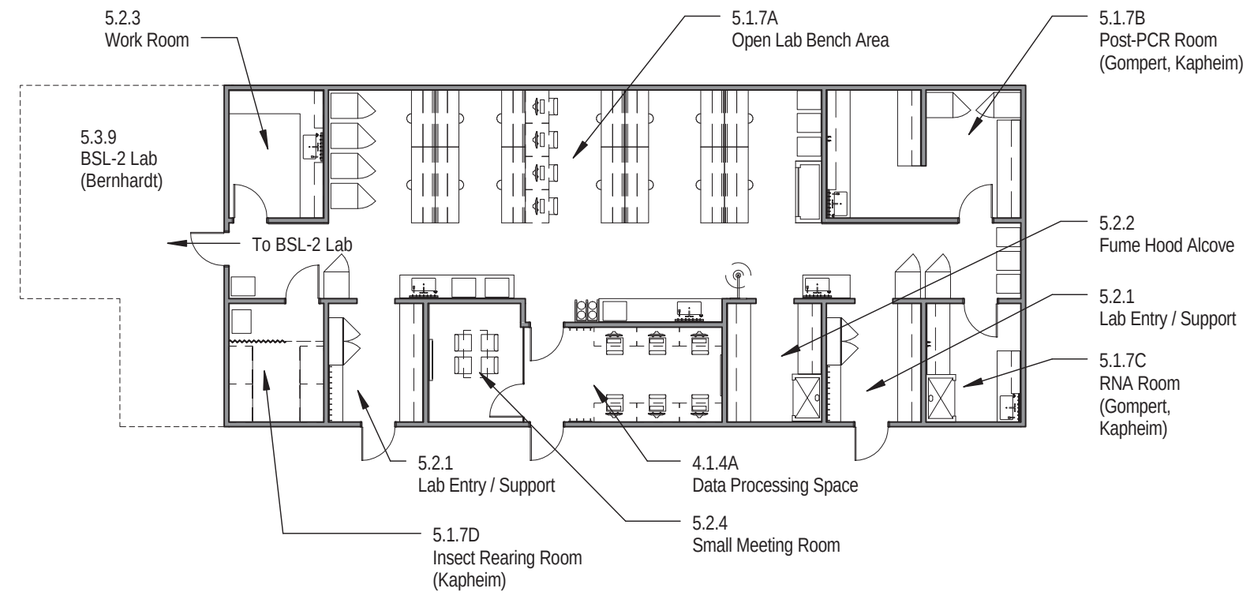

5.1.6 RESEARCH LAB SUITE
BASED ON INTERVIEWS WITH KROPP, TAKEMOTO, WELKER
PRIMARY USER OF SUPPORT ROOM IS INDICATED IN PARENTHESIS

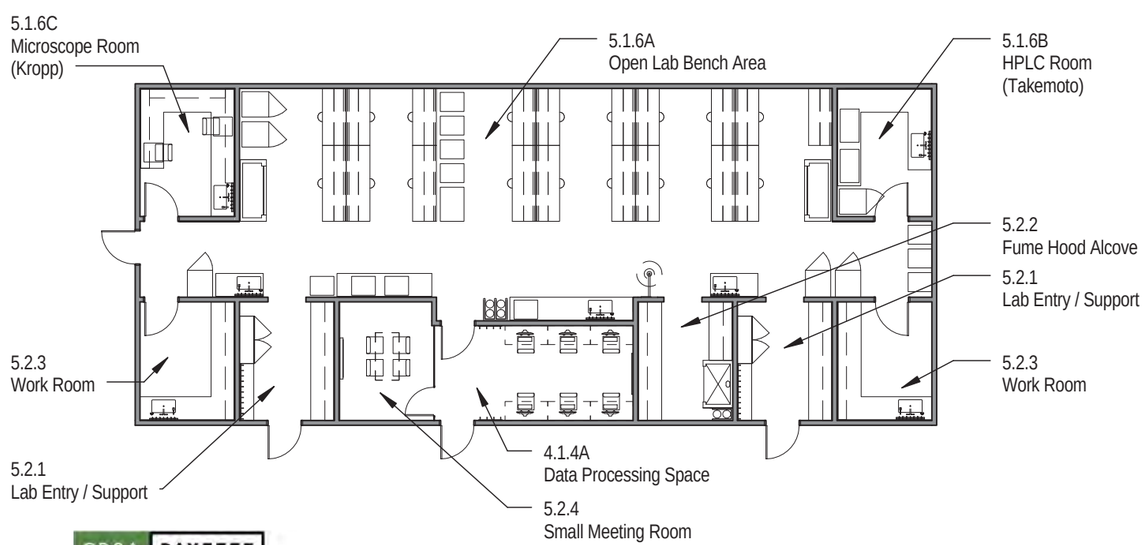

5.1.8 RESEARCH LAB SUITE (2PI)
BASED ON INTERVIEW WITH NISCHWITZ
PRIMARY USER OF SUPPORT ROOM IS INDICATED IN PARENTHESIS

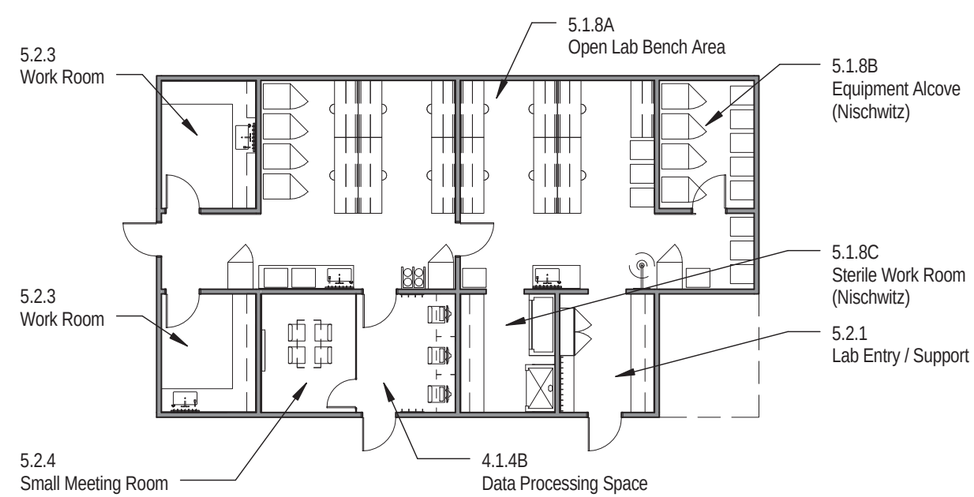

5.1.1A Open Lab Bench Area

Room Data Sheet Detail

Department: Biology
Issue Date: WORK IN PROGRESS
Room No:

Space Information

Room Function: *Shared open research lab*
Adjacencies: *Refer to 5.1*
Access: *Faculty, Students*
Room Utilization *24 hrs*
General Notes: Generic lab suite based on interviews with Beckman and Messina

Special Requirements

Lighting Controls: *See Proj. Standards, Ch. 3*
Acoustic Req: *See acoustics narrative, Ch. 4*
Structural Req: *None*
Security: *Locked*
Other Spec Req:

Room Size and Capacity

Proposed Area: *Included in 5.1 lab suites*
Total Area: *1595 SF*
Room Quantity: *1*
Assigned Cap: *3*
Unassigned Cap: *6*
Total Cap: *9*

Finishes, Doors and Windows

Floor: *Resilient Tile*
Base: *Resilient, Cove*
Walls: *Gyp. Bd.*
Wall Finish: *Paint*
Ceiling: *ACT (2'x2') clouds*
Ceiling Height: *10'-0" min.*

Door Size: *3'-6" single leaf*
Door Type: *Wood*
Door Vis Panel: *Yes*
Window Treat: *Light-filtering*
Window Skylight: *None*

Casework and Built-ins

Wall Cabinets: *None*
Base Cabinets: *Wood*
Counter Tops: *Epoxy Resin*
Counter (LF): *See diagram*
Counter Height: *36" UON*

Shelving (LF): *Yes*
Drawer Units: *Yes*
White Boards: *Yes, as noted*
Tack Boards *None*
Proj. Screen: *None*

Communications

See Project Design Standards in Chapter 3 and electrical/telecomm narrative in Chapter 4

HVAC

Air Changes: *Research Lab Standard*
Air Circulation: *Research Lab Standard*
Pressure: *Negative to corridor*
Temperature: *Research Lab Standard*
Rel. Humidity: *Research Lab Standard*
Local Exhaust: *As noted*
Air Filtration: *Research Lab Standard*
CO2 Sensor: *Research Lab Standard*
Distribution: *Research Lab Standard*
Other HVAC:

Electrical

See Project Design Standards in Chapter 3 and electrical/telecomm narrative in Chapter 4

Plumbing

Sinks: *Epoxy resin, grey*
Pure Water: *Only as indicated*
Hot/Cold Water: *Yes*
Hose Bibb: *None*
Floor Drain: *None*
Waste: *Lab Waste*
Emer. Eyewash: *Yes*
Emer. Station: *Yes*
Gases:
Comp. Air: *Yes, as noted*
Lab Gas: *None*
Vacuum: *Yes, as noted*
CO^2: *None*
Other Gas:
Fire Protection: *Wet Sprinkler*

Equipment

Type	Count	Status
-20C Freezer	3	4
4x1 Gas Cylinder Rack	1	1
5' Double Door Refrigerator	1	4
6' Laminar Flow Hood	1	2
32"x32" Refrigerator	6	4
Centrifuge	1	4

Type	Count	Status
Drying Oven	1	4
Generic Equipment	3	4
Generic Gas Tank	4	4
Growth Chamber	2	4
Incubator	1	4
Low-Temperature Incubator	4	4

Furniture

Type	Count	Status
Lab Stool	16	3

See Appendix Section 6.2, for individual researchers' equipment sheets (Status 4) for Lab Suite 5.1.1

Status Key: **1** = Furnished and Installed by Contractor (CFCI), **2** = Furnished by Owner, Contractor Installed (OFCI), **3** = Furnished and Installed by Owner (OFOI), **4** = Provided Outside of Project Budget

CRSA PAYETTE

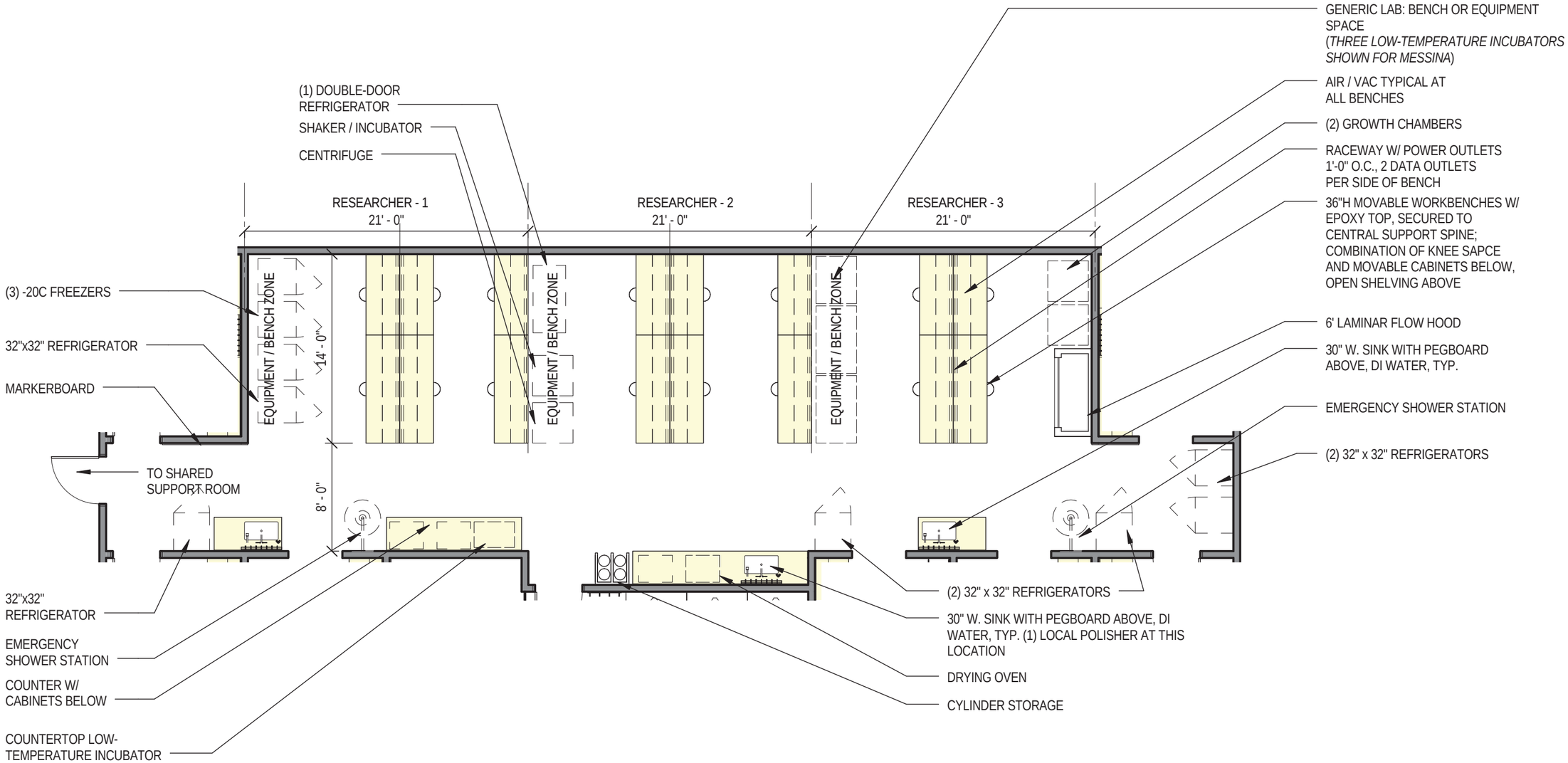

NOTE: PROVISION FOR (6) 240V OUTLETS IN EACH LAB SUITE. EXACT LOCATIONS TO BE DETERMINED.

Scale: 1/8" = 1'-0"

CRSA PAYETTE

5.1.2A Open Lab Bench Area

Room Data Sheet Detail

Department: Biology
Issue Date: WORK IN PROGRESS
Room No:

Space Information

Room Function: *Shared open research lab*
Adjacencies: *Refer to 5.1*
Access: *Faculty, Students*
Room Utilization *24 hrs*
General Notes: Based on interviews with Brodie, French and Savitzky

Special Requirements

Lighting Controls: *See Proj. Standards, Ch. 3*
Acoustic Req: *See acoustics narrative, Ch. 4*
Structural Req: *None*
Security: *Locked*
Other Spec Req:

Room Size and Capacity

Proposed Area: *Included in 5.1 lab suites*
Total Area: *1595 SF*
Room Quantity: *1*
Assigned Cap: *3*
Unassigned Cap: *6*
Total Cap: *9*

Finishes, Doors and Windows

Floor: *Resilient Tile*
Base: *Resilient, Cove*
Walls: *Gyp. Bd.*
Wall Finish: *Paint*
Ceiling: *ACT (2'x2') clouds*
Ceiling Height: *10'-0" min.*

Door Size: *3'-6" single leaf*
Door Type: *Wood*
Door Vis Panel: *Yes*
Window Treat: *Light-filtering*
Window Skylight: *None*

Casework and Built-ins

Wall Cabinets: *None*
Base Cabinets: *Wood*
Counter Tops: *Epoxy Resin*
Counter (LF): *See diagram*
Counter Height: *36" UON*

Shelving (LF): *Yes*
Drawer Units: *Yes*
White Boards: *Yes, as noted*
Tack Boards *None*
Proj. Screen: *None*

Communications

See Project Design Standards in Chapter 3 and electrical/telecomm narrative in Chapter 4

HVAC

Air Changes: *Research Lab Standard*
Air Circulation: *Research Lab Standard*
Pressure: *Negative to corridor*
Temperature: *Research Lab Standard*
Rel. Humidity: *Research Lab Standard*
Local Exhaust: *As noted*
Air Filtration: *Research Lab Standard*
CO2 Sensor: *Research Lab Standard*
Distribution: *Research Lab Standard*
Other HVAC:

Electrical

See Project Design Standards in Chapter 3 and electrical/telecomm narrative in Chapter 4

Plumbing

Sinks: *Epoxy resin, grey*
Pure Water: *Only as indicated*
Hot/Cold Water: *Yes*
Hose Bibb: *None*
Floor Drain: *None*
Waste: *Lab Waste*
Emer. Eyewash: *Yes*
Emer. Station: *Yes*
Gases:
- *Comp. Air:* *Yes, as noted*
- *Lab Gas:* *None*
- *Vacuum:* *Yes, as noted*
- *CO^2:* *None*
- *Other Gas:*

Fire Protection: *Wet Sprinkler*

Equipment

Type	Count	Status
4x1 Gas Cylinder Rack	1	1
32"x32" Refrigerator	7	4
Electrophoresis Set-up	1	4
Generic Equipment	10	4
Generic Gas Tank	4	4

See Appendix Section 6.2, for individual researchers' equipment sheets (Status 4) for Lab Suite 5.1.2

Furniture

Type	Count	Status
Lab Stool	18	3

Status Key: **1** = Furnished and Installed by Contractor (CFCI), **2** = Furnished by Owner, Contractor Installed (OFCI), **3** = Furnished and Installed by Owner (OFOI), **4** = Provided Outside of Project Budget

CRSA PAYETTE

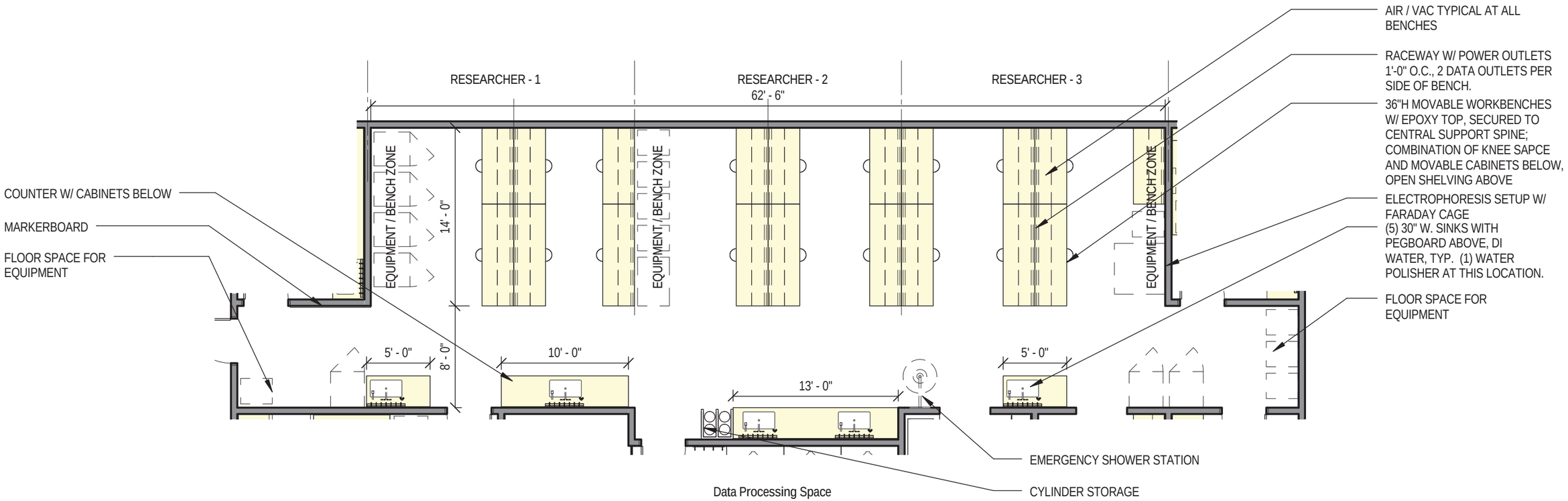

NOTES:
SHARED EQUIPMENT: PLATE READER, PLATE WASHER, (2) COUNTERTOP REF. CENTRIFUDES - 3'X3', (2) C02 WATER JACKETED INCUBATORS, MICROSCOPES.
PROVISION FOR (6) 240V OUTLETS IN EACH LAB SUITE. EXACT LOCATIONS TO BE DETERMINED.

Scale: 1/8" = 1'-0"

CRSA PAYETTE

5.1.2B Microscope Room

Room Data Sheet Detail

Department: Biology
Issue Date: WORK IN PROGRESS
Room No:

Space Information

Room Function: Research support
Adjacencies: Refer to 5.1
Access: Faculty, Students
Room Utilization 24 hrs
General Notes: Primary users: Brodie and Savitzky

Special Requirements

Lighting Controls: See Proj. Standards, Ch. 3
Acoustic Req: See acoustics narrative, Ch. 4
Structural Req: None
Security: Locked
Other Spec Req:

Room Size and Capacity

Proposed Area: Included in 5.1 lab suites
Total Area: 135 SF
Room Quantity: 1
Assigned Cap: 0
Unassigned Cap: 2
Total Cap: 2

Finishes, Doors and Windows

Floor: Resilient Tile
Base: Resilient, Cove
Walls: Gyp. Bd.
Wall Finish: Paint
Ceiling: ACT (2'x2')
Ceiling Height:

Door Size: 3'-6" single leaf
Door Type: Wood
Door Vis Panel: Yes
Window Treat: Light-filtering
Window Skylight: None

Casework and Built-ins

Wall Cabinets: Wood w/ glass doors
Base Cabinets: Wood
Counter Tops: Epoxy Resin
Counter (LF): See diagram
Counter Height: 36" UON

Shelving (LF): No
Drawer Units: Yes
White Boards: None
Tack Boards None
Proj. Screen: None

Communications

See Project Design Standards in Chapter 3 and electrical/telecomm narrative in Chapter 4

HVAC

Air Changes: Research Lab Standard
Air Circulation: Research Lab Standard
Pressure: Negative to corridor
Temperature: Research Lab Standard
Rel. Humidity: Research Lab Standard
Local Exhaust: As noted
Air Filtration: Research Lab Standard
CO2 Sensor: Research Lab Standard
Distribution: Research Lab Standard
Other HVAC:

Electrical

See Project Design Standards in Chapter 3 and electrical/telecomm narrative in Chapter 4

Plumbing

Sinks: Epoxy resin, grey
Pure Water: Only as indicated
Hot/Cold Water: Yes
Hose Bibb: None
Floor Drain: None
Waste: Lab Waste
Emer. Eyewash: None
Emer. Station: None
Gases:
- Comp. Air: None
- Lab Gas: None
- Vacuum: None
- CO^2: None
- Other Gas:

Fire Protection: Wet Sprinkler

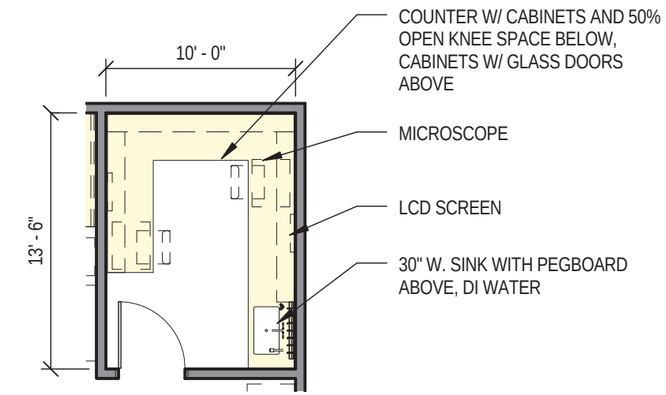

Equipment

Type	Count	Status
Microscope	2	4
Wall Mounted Computer Screen	2	4

Furniture

Type	Count	Status
Task Chair	2	3

Status Key: **1** = Furnished and Installed by Contractor (CFCI), **2** = Furnished by Owner, Contractor Installed (OFCI), **3** = Furnished and Installed by Owner (OFOI), **4** = Provided Outside of Project Budget

Scale: 1/8" = 1'-0"

CRSA PAYETTE

5.1.2C HPLC Room

Room Data Sheet Detail

Department: Biology
Issue Date: WORK IN PROGRESS
Room No:

Space Information

Room Function: Research support
Adjacencies: Refer to 5.1
Access: Faculty, Students
Room Utilization 24 hrs
General Notes: Primary user: Savitzky

Special Requirements

Lighting Controls: See Proj. Standards, Ch. 3
Acoustic Req: See acoustics narrative, Ch. 4
Structural Req: None
Security: Locked
Other Spec Req:

Room Size and Capacity

Proposed Area: Included in 5.1 lab suites
Total Area: 125 SF
Room Quantity: 1
Assigned Cap: 0
Unassigned Cap: 3
Total Cap: 3

Finishes, Doors and Windows

Floor: Resilient Tile
Base: Resilient, Cove
Walls: Gyp. Bd.
Wall Finish: Paint
Ceiling: ACT (2'x2')
Ceiling Height:

Door Size: 3'-6" single leaf
Door Type: Wood
Door Vis Panel: Yes
Window Treat: Light-filtering
Window Skylight: None

Casework and Built-ins

Wall Cabinets: Wood
Base Cabinets: Wood
Counter Tops: Epoxy Resin
Counter (LF): See diagram
Counter Height: 36" UON

Shelving (LF): Yes
Drawer Units: Yes
White Boards: None
Tack Boards None
Proj. Screen: None

Communications

See Project Design Standards in Chapter 3 and electrical/telecomm narrative in Chapter 4

HVAC

Air Changes: Research Lab Standard
Air Circulation: Research Lab Standard
Pressure: Negative to corridor
Temperature: Research Lab Standard
Rel. Humidity: Research Lab Standard
Local Exhaust: As noted
Air Filtration: Research Lab Standard
CO2 Sensor: Research Lab Standard
Distribution: Research Lab Standard
Other HVAC:

Electrical

See Project Design Standards in Chapter 3 and electrical/telecomm narrative in Chapter 4

Plumbing

Sinks: Epoxy resin, grey
Pure Water: Only as indicated
Hot/Cold Water: Yes
Hose Bibb: None
Floor Drain: None
Waste: Lab Waste
Emer. Eyewash: None
Emer. Station: None
Gases:
Comp. Air: None
Lab Gas: None
Vacuum: None
CO^2: None
Other Gas:
Fire Protection: Wet Sprinkler

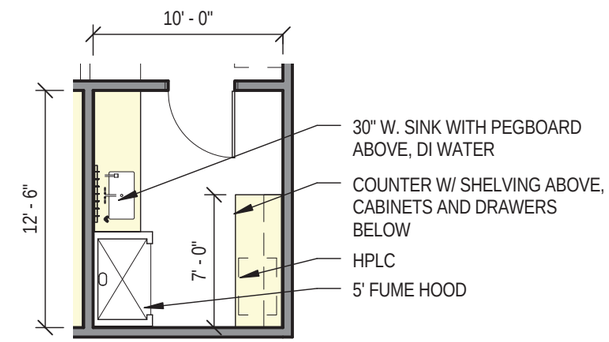

Equipment

Type	Count	Status
5' Fume Hood	1	1
HPLC	1	4

Furniture

Type	Count	Status

Status Key: **1** = Furnished and Installed by Contractor (CFCI), **2** = Furnished by Owner, Contractor Installed (OFCI), **3** = Furnished and Installed by Owner (OFOI), **4** = Provided Outside of Project Budget

Scale: 1/8" = 1'-0"

CRSA PAYETTE

5.1.2D Radioisotope Room

Room Data Sheet Detail

Department: Biology
Issue Date: WORK IN PROGRESS
Room No:

Space Information

Room Function: Research support
Adjacencies: Refer to 5.1
Access: Faculty, Students
Room Utilization 24 hrs
General Notes: Primary user: French

Special Requirements

Lighting Controls: See Proj. Standards, Ch. 3
Acoustic Req: See acoustics narrative, Ch. 4
Structural Req: None
Security: Locked
Other Spec Req:

Room Size and Capacity

Proposed Area: Included in 5.1 lab suites
Total Area: 256 SF
Room Quantity: 1
Assigned Cap: 0
Unassigned Cap: 3
Total Cap: 3

Finishes, Doors and Windows

Floor: Resilient Tile
Base: Resilient, Cove
Walls: Gyp. Bd.
Wall Finish: Paint
Ceiling: ACT (2'x2')
Ceiling Height:

Door Size: 3'-6" single leaf
Door Type: Wood
Door Vis Panel: Yes
Window Treat: Light-filtering
Window Skylight: None

Casework and Built-ins

Wall Cabinets: Wood
Base Cabinets: Wood
Counter Tops: Epoxy Resin
Counter (LF): See diagram
Counter Height: 36" UON

Shelving (LF): Yes
Drawer Units: Yes
White Boards: None
Tack Boards None
Proj. Screen: None

Communications

See Project Design Standards in Chapter 3 and electrical/telecomm narrative in Chapter 4

HVAC

Air Changes: Research Lab Standard
Air Circulation: Research Lab Standard
Pressure: Negative to corridor
Temperature: Research Lab Standard
Rel. Humidity: Research Lab Standard
Local Exhaust: As noted
Air Filtration: Research Lab Standard
CO2 Sensor: Research Lab Standard
Distribution: Research Lab Standard
Other HVAC:

Electrical

See Project Design Standards in Chapter 3 and electrical/telecomm narrative in Chapter 4

Plumbing

Sinks: Epoxy resin, grey
Pure Water: Only as indicated
Hot/Cold Water: Yes
Hose Bibb: None
Floor Drain: None
Waste: Lab Waste
Emer. Eyewash: None
Emer. Station: None
Gases:
Comp. Air: Yes, as noted
Lab Gas: None
Vacuum: Yes, as noted
CO^2: None
Other Gas:
Fire Protection: Wet Sprinkler

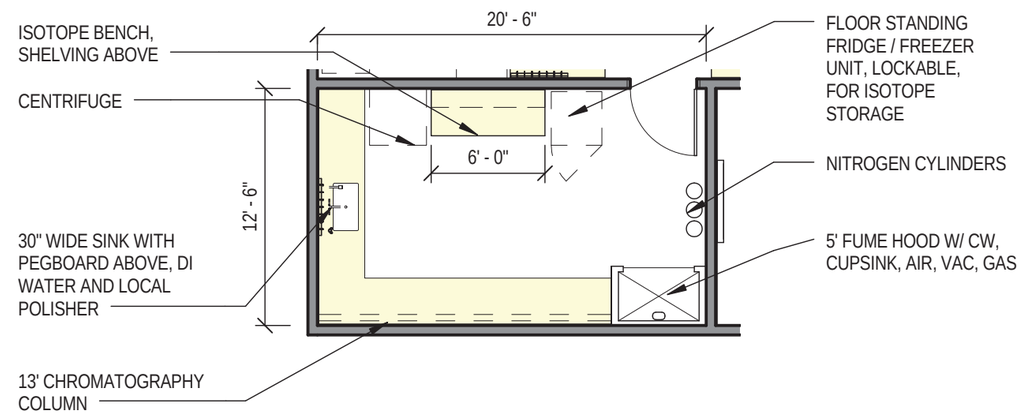

Equipment

Type	Count	Status
5' Fume Hood	1	1
Centrifuge	1	4
Chromatography Column	1	4
Nitrogen Tank	3	4
Refrigerator/Freezer	1	4

Furniture

Type	Count	Status

Status Key: **1** = Furnished and Installed by Contractor (CFCI), **2** = Furnished by Owner, Contractor Installed (OFCI), **3** = Furnished and Installed by Owner (OFOI), **4** = Provided Outside of Project Budget

Scale: 1/8" = 1'-0"

CRSA PAYETTE

5.1.2E Support Room

Room Data Sheet Detail

Department: Biology
Issue Date: WORK IN PROGRESS
Room No:

Space Information

Room Function: Research support
Adjacencies: Refer to 5.1
Access: Faculty, Students
Room Utilization 24 hrs
General Notes: Primary users: Brodie and Savitzky

Special Requirements

Lighting Controls: See Proj. Standards, Ch. 3
Acoustic Req: See acoustics narrative, Ch. 4
Structural Req: None
Security: Locked
Other Spec Req:

Room Size and Capacity

Proposed Area: Included in 5.1 lab suites
Total Area: 135 SF
Room Quantity: 1
Assigned Cap: 0
Unassigned Cap: 3
Total Cap: 3

Finishes, Doors and Windows

Floor: Resilient Tile
Base: Resilient, Cove
Walls: Gyp. Bd.
Wall Finish: Paint
Ceiling: ACT (2'x2')
Ceiling Height:

Door Size: 3'-6" single leaf
Door Type: Wood
Door Vis Panel: Yes
Window Treat: Light-filtering
Window Skylight: None

Casework and Built-ins

Wall Cabinets: Wood
Base Cabinets: Wood
Counter Tops: Epoxy Resin
Counter (LF): See diagram
Counter Height: 36" UON

Shelving (LF): Yes
Drawer Units: Yes
White Boards: None
Tack Boards None
Proj. Screen: None

Communications

See Project Design Standards in Chapter 3 and electrical/telecomm narrative in Chapter 4

HVAC

Air Changes: Research Lab Standard
Air Circulation: Research Lab Standard
Pressure: Negative to corridor
Temperature: Research Lab Standard
Rel. Humidity: Research Lab Standard
Local Exhaust: As noted
Air Filtration: Research Lab Standard
CO2 Sensor: Research Lab Standard
Distribution: Research Lab Standard
Other HVAC:

Electrical

See Project Design Standards in Chapter 3 and electrical/telecomm narrative in Chapter 4

Plumbing

Sinks: Epoxy resin, grey
Pure Water: Only as indicated
Hot/Cold Water: Yes
Hose Bibb: None
Floor Drain: None
Waste: Lab Waste
Emer. Eyewash: None
Emer. Station: None
Gases:
Comp. Air: None
Lab Gas: None
Vacuum: None
CO^2: None
Other Gas:
Fire Protection: Wet Sprinkler

Equipment

Type	Count	Status
18"D Chemical Storage Cabinet 4'	2	3

Furniture

Type	Count	Status

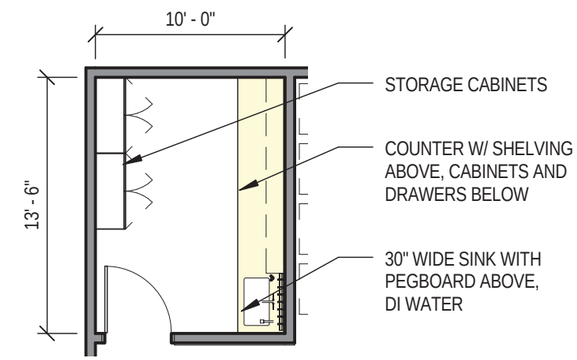

Status Key: **1** = Furnished and Installed by Contractor (CFCI), **2** = Furnished by Owner, Contractor Installed (OFCI), **3** = Furnished and Installed by Owner (OFOI), **4** = Provided Outside of Project Budget

Scale: 1/8" = 1'-0"

CRSA PAYETTE

5.1.3A Open Lab Bench Area

Room Data Sheet Detail

Department: Biology
Issue Date: WORK IN PROGRESS
Room No:

Space Information

Room Function: *Shared open research lab*
Adjacencies: *Refer to 5.1*
Access: *Faculty, Students*
Room Utilization *24 hrs*
General Notes: Based on interviews with Ramirez, Alston, and Evans

Special Requirements

Lighting Controls: *See Proj. Standards, Ch. 3*
Acoustic Req: *See acoustics narrative, Ch. 4*
Structural Req: *None*
Security: *Locked*
Other Spec Req:

Room Size and Capacity

Proposed Area: *Included in 5.1 lab suites*
Total Area: *1595 SF*
Room Quantity: *1*
Assigned Cap: *3*
Unassigned Cap: *6*
Total Cap: *9*

Finishes, Doors and Windows

Floor: *Resilient Tile*
Base: *Resilient, Cove*
Walls: *Gyp. Bd.*
Wall Finish: *Paint*
Ceiling: *ACT (2'x2') clouds*
Ceiling Height: *10'-0" min.*

Door Size: *3'-6" single leaf*
Door Type: *Wood*
Door Vis Panel: *Yes*
Window Treat: *Light-filtering*
Window Skylight: *None*

Casework and Built-ins

Wall Cabinets: *Wood*
Base Cabinets: *Wood*
Counter Tops: *Epoxy Resin*
Counter (LF): *See diagram*
Counter Height: *36" UON*

Shelving (LF): *Yes*
Drawer Units: *Yes*
White Boards: *Yes, as noted*
Tack Boards *None*
Proj. Screen: *None*

Communications

See Project Design Standards in Chapter 3 and electrical/telecomm narrative in Chapter 4

HVAC

Air Changes: *Research Lab Standard*
Air Circulation: *Research Lab Standard*
Pressure: *Negative to corridor*
Temperature: *Research Lab Standard*
Rel. Humidity: *Research Lab Standard*
Local Exhaust: *As noted*
Air Filtration: *Research Lab Standard*
CO2 Sensor: *Research Lab Standard*
Distribution: *Research Lab Standard*
Other HVAC:

Electrical

See Project Design Standards in Chapter 3 and electrical/telecomm narrative in Chapter 4

Plumbing

Sinks: *Epoxy resin, grey*
Pure Water: *Only as indicated*
Hot/Cold Water: *Yes*
Hose Bibb: *None*
Floor Drain: *None*
Waste: *Lab Waste*
Emer. Eyewash: *Yes*
Emer. Station: *Yes*
Gases:
Comp. Air: *Yes, as noted*
Lab Gas: *None*
Vacuum: *Yes, as noted*
CO^2: *None*
Other Gas:
Fire Protection: *Wet Sprinkler*

Equipment

Type	Count	Status
4x1 Gas Cylinder Rack	1	1
6' Laminar Flow Hood	1	2
32"x32" Refrigerator	7	4
Computer	2	4
Generic Equipment	12	4
Generic Gas Tank	4	4

See Appendix Section 6.2, for individual researchers' equipment sheets (Status 4) for Lab Suite 5.1.3

Furniture

Type	Count	Status
30"x36" Table	2	3
Lab Stool	18	3
Task Chair	2	3

Status Key: **1** = Furnished and Installed by Contractor (CFCI), **2** = Furnished by Owner, Contractor Installed (OFCI), **3** = Furnished and Installed by Owner (OFOI), **4** = Provided Outside of Project Budget

CRSA PAYETTE

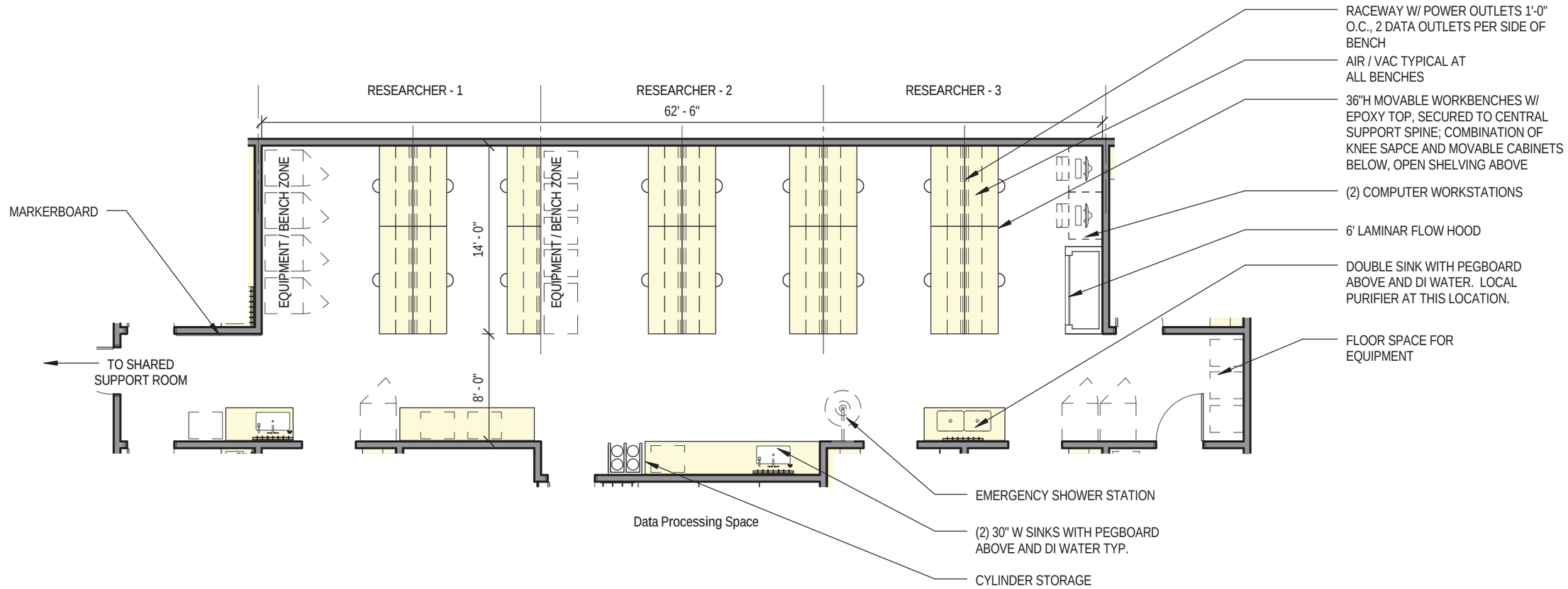

NOTE: PROVISION FOR (6) 240V OUTLETS IN EACH LAB SUITE. EXACT LOCATIONS TO BE DETEMINED.

Scale: 1/8" = 1'-0"

CRSA PAYETTE

5.1.3B Balance Room

Room Data Sheet Detail

Department: Biology
Issue Date: WORK IN PROGRESS
Room No:

Space Information

Room Function: Research support
Adjacencies: Refer to 5.1
Access: Faculty, Students
Room Utilization 24 hrs
General Notes: Primary users: Evans, shared

Special Requirements

Lighting Controls: See Proj. Standards, Ch. 3
Acoustic Req: See acoustics narrative, Ch. 4
Structural Req: None
Security: Locked
Other Spec Req:

Room Size and Capacity

Proposed Area: Included in 5.1 lab suites
Total Area: 135 SF
Room Quantity: 1
Assigned Cap: 0
Unassigned Cap: 3
Total Cap: 3

Finishes, Doors and Windows

Floor: Resilient Tile
Base: Resilient, Cove
Walls: Gyp. Bd.
Wall Finish: Paint
Ceiling: ACT (2'x2')
Ceiling Height:

Door Size: 3'-6" single leaf
Door Type: Wood
Door Vis Panel: Yes
Window Treat: Light-filtering
Window Skylight: None

Casework and Built-ins

Wall Cabinets: Wood
Base Cabinets: Wood
Counter Tops: Epoxy Resin
Counter (LF): See diagram
Counter Height: 36" UON

Shelving (LF): Yes
Drawer Units: Yes
White Boards: None
Tack Boards None
Proj. Screen: None

Communications

See Project Design Standards in Chapter 3 and electrical/telecomm narrative in Chapter 4

HVAC

Air Changes: Research Lab Standard
Air Circulation: Research Lab Standard
Pressure: Negative to corridor
Temperature: Research Lab Standard
Rel. Humidity: Research Lab Standard
Local Exhaust: As noted
Air Filtration: Research Lab Standard
CO2 Sensor: Research Lab Standard
Distribution: Research Lab Standard
Other HVAC:

Electrical

See Project Design Standards in Chapter 3 and electrical/telecomm narrative in Chapter 4

Plumbing

Sinks: Epoxy resin, grey
Pure Water: Only as indicated
Hot/Cold Water: Yes
Hose Bibb: None
Floor Drain: None
Waste: Lab Waste
Emer. Eyewash: None
Emer. Station: None
Gases:
Comp. Air: None
Lab Gas: None
Vacuum: None
CO^2: None
Other Gas:
Fire Protection: Wet Sprinkler

Equipment

Type	Count	Status

Furniture

Type	Count	Status

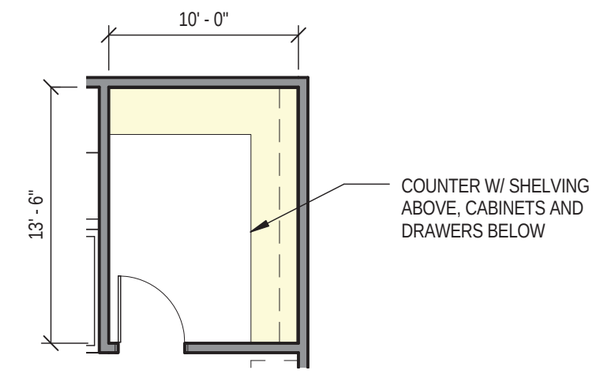

Status Key: **1** = Furnished and Installed by Contractor (CFCI), **2** = Furnished by Owner, Contractor Installed (OFCI), **3** = Furnished and Installed by Owner (OFOI), **4** = Provided Outside of Project Budget

Scale: 1/8" = 1'-0"

CRSA PAYETTE

5.1.3C Insect Rearing Room

Room Data Sheet Detail

Department: Biology
Issue Date: WORK IN PROGRESS
Room No:

Space Information

Room Function: Research support
Adjacencies: Refer to 5.1
Access: Faculty, Students
Room Utilization 24 hrs
General Notes: Primary user: Alston

Special Requirements

Lighting Controls: See Proj. Standards, Ch. 3
Acoustic Req: See acoustics narrative, Ch. 4
Structural Req: None
Security: Locked
Other Spec Req:

Room Size and Capacity

Proposed Area: Included in 5.1 lab suites
Total Area: 125 SF
Room Quantity: 1
Assigned Cap: 0
Unassigned Cap: 3
Total Cap: 3

Finishes, Doors and Windows

Floor: Resilient Tile
Base: Resilient, Cove
Walls: Gyp. Bd.
Wall Finish: Paint
Ceiling: ACT (2'x2')
Ceiling Height:

Door Size: 3'-6" single leaf
Door Type: Wood
Door Vis Panel: Yes
Window Treat: Blackout
Window Skylight: None

Casework and Built-ins

Wall Cabinets: None
Base Cabinets: None
Counter Tops: None
Counter (LF): See diagram
Counter Height: None

Shelving (LF): None
Drawer Units: None
White Boards: None
Tack Boards None
Proj. Screen: None

Communications

See Project Design Standards in Chapter 3 and electrical/telecomm narrative in Chapter 4

HVAC

Air Changes: Research Lab Standard
Air Circulation: Research Lab Standard
Pressure: Negative to corridor
Temperature: Research Lab Standard
Rel. Humidity: Research Lab Standard
Local Exhaust: As noted
Air Filtration: Research Lab Standard
CO2 Sensor: Research Lab Standard
Distribution: Research Lab Standard
Other HVAC:

Electrical

See Project Design Standards in Chapter 3 and electrical/telecomm narrative in Chapter 4

Plumbing

Sinks: Epoxy resin, grey
Pure Water: Only as indicated
Hot/Cold Water: Yes
Hose Bibb: None
Floor Drain: None
Waste: Lab Waste
Emer. Eyewash: None
Emer. Station: None
Gases:
Comp. Air: None
Lab Gas: None
Vacuum: None
CO^2: None
Other Gas:
Fire Protection: Wet Sprinkler

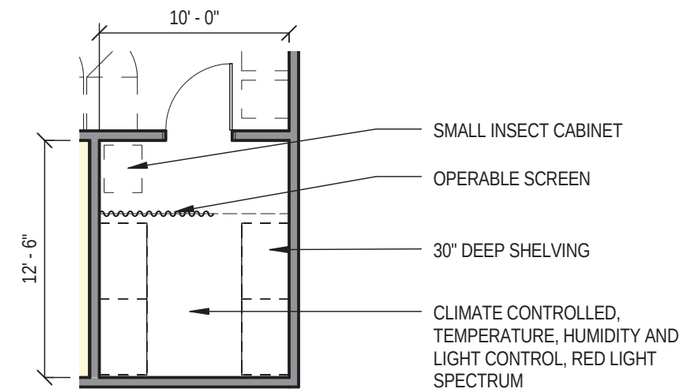

Equipment

Type	Count	Status
Blackout Curtain	1	1
Small Insect Cabinet	1	4

Furniture

Type	Count	Status
18"D Wire Shelving	6	3

Status Key: **1** = Furnished and Installed by Contractor (CFCI), **2** = Furnished by Owner, Contractor Installed (OFCI), **3** = Furnished and Installed by Owner (OFOI), **4** = Provided Outside of Project Budget

Scale: 1/8" = 1'-0"

CRSA PAYETTE

5.1.3D Plant Growth Room

Room Data Sheet Detail

Department: Biology
Issue Date: WORK IN PROGRESS
Room No:

Space Information

Room Function: Research support
Adjacencies: Refer to 5.1
Access: Faculty, Students
Room Utilization 24 hrs
General Notes: Primary user: Ramirez

Special Requirements

Lighting Controls: See Proj. Standards, Ch. 3
Acoustic Req: See acoustics narrative, Ch. 4
Structural Req: None
Security: Locked
Other Spec Req:

Room Size and Capacity

Proposed Area: Included in 5.1 lab suites
Total Area: 125 SF
Room Quantity: 2
Assigned Cap: 0
Unassigned Cap: 3
Total Cap: 3

Finishes, Doors and Windows

Floor: Resilient Tile
Base: Resilient, Cove
Walls: Gyp. Bd.
Wall Finish: Paint
Ceiling: ACT (2'x2')
Ceiling Height:

Door Size: 3'-6" single leaf
Door Type: Wood
Door Vis Panel: Yes
Window Treat: Light-filtering
Window Skylight: None

Casework and Built-ins

Wall Cabinets: Wood
Base Cabinets: Wood
Counter Tops: Epoxy Resin
Counter (LF): See diagram
Counter Height: 36" UON

Shelving (LF): Yes
Drawer Units: Yes
White Boards: None
Tack Boards None
Proj. Screen: None

Communications

See Project Design Standards in Chapter 3 and electrical/telecomm narrative in Chapter 4

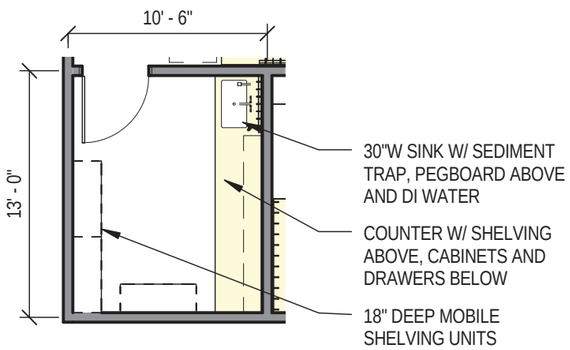

HVAC

Air Changes: Research Lab Standard
Air Circulation: Research Lab Standard
Pressure: Negative to corridor
Temperature: Research Lab Standard
Rel. Humidity: Research Lab Standard
Local Exhaust: As noted
Air Filtration: Research Lab Standard
CO2 Sensor: Research Lab Standard
Distribution: Research Lab Standard
Other HVAC:

Electrical

See Project Design Standards in Chapter 3 and electrical/telecomm narrative in Chapter 4

Plumbing

Sinks: Epoxy resin, grey
Pure Water: Only as indicated
Hot/Cold Water: Yes
Hose Bibb: None
Floor Drain: None
Waste: Lab Waste
Emer. Eyewash: None
Emer. Station: None
Gases:
Comp. Air: None
Lab Gas: None
Vacuum: None
CO^2: None
Other Gas:
Fire Protection: Wet Sprinkler

Equipment

Type	Count	Status

Furniture

Type	Count	Status
18"D Wire Shelving	6	3

Status Key: **1** = Furnished and Installed by Contractor (CFCI), **2** = Furnished by Owner, Contractor Installed (OFCI), **3** = Furnished and Installed by Owner (OFOI), **4** = Provided Outside of Project Budget

Scale: 1/8" = 1'-0"

CRSA PAYETTE

BLANK PAGE

5.1.4A Open Lab Bench Area

Room Data Sheet Detail

Department: Biology
Issue Date: WORK IN PROGRESS
Room No:

Space Information

Room Function: *Shared open research lab*
Adjacencies: *Refer to 5.1*
Access: *Faculty, Students*
Room Utilization *24 hrs*
General Notes: Based on interviews with Baker and Stark

Special Requirements

Lighting Controls: *See Proj. Standards, Ch. 3*
Acoustic Req: *See acoustics narrative, Ch. 4*
Structural Req: *None*
Security: *Locked*
Other Spec Req:

Room Size and Capacity

Proposed Area: *Included in 5.1 lab suites*
Total Area: *1595 SF*
Room Quantity: *1*
Assigned Cap: *3*
Unassigned Cap: *6*
Total Cap: *9*

Finishes, Doors and Windows

Floor: *Resilient Tile*
Base: *Resilient, Cove*
Walls: *Gyp. Bd.*
Wall Finish: *Paint*
Ceiling: *ACT (2'x2') clouds*
Ceiling Height: *10'-0" min.*

Door Size: *3'-6" single leaf*
Door Type: *Wood*
Door Vis Panel: *Yes*
Window Treat: *Light-filtering*
Window Skylight: *None*

Casework and Built-ins

Wall Cabinets: *Wood*
Base Cabinets: *Wood*
Counter Tops: *Epoxy Resin*
Counter (LF): *See diagram*
Counter Height: *36" UON*

Shelving (LF): *Yes*
Drawer Units: *Yes*
White Boards: *Yes, as noted*
Tack Boards *None*
Proj. Screen: *None*

Communications

See Project Design Standards in Chapter 3 and electrical/telecomm narrative in Chapter 4

HVAC

Air Changes: *Research Lab Standard*
Air Circulation: *Research Lab Standard*
Pressure: *Negative to corridor*
Temperature: *Research Lab Standard*
Rel. Humidity: *Research Lab Standard*
Local Exhaust: *As noted*
Air Filtration: *Research Lab Standard*
CO2 Sensor: *Research Lab Standard*
Distribution: *Research Lab Standard*
Other HVAC:

Electrical

See Project Design Standards in Chapter 3 and electrical/telecomm narrative in Chapter 4

Plumbing

Sinks: *Epoxy resin, grey*
Pure Water: *Only as indicated*
Hot/Cold Water: *Yes*
Hose Bibb: *None*
Floor Drain: *None*
Waste: *Lab Waste*
Emer. Eyewash: *Yes*
Emer. Station: *Yes*
Gases:
Comp. Air: *Yes, as noted*
Lab Gas: *None*
Vacuum: *Yes, as noted*
CO^2: *None*
Other Gas:
Fire Protection: *Wet Sprinkler*

Equipment

Type	Count	Status
4x1 Gas Cylinder Rack	1	1
32"x32" Refrigerator	7	4
Generic Equipment	12	4
Generic Gas Tank	11	4

See Appendix Section 6.2, for individual researchers' equipment sheets (Status 4) for Lab Suite 5.1.4

Furniture

Type	Count	Status
Lab Stool	18	3

Status Key: **1** = Furnished and Installed by Contractor (CFCI), **2** = Furnished by Owner, Contractor Installed (OFCI), **3** = Furnished and Installed by Owner (OFOI), **4** = Provided Outside of Project Budget

CRSA PAYETTE

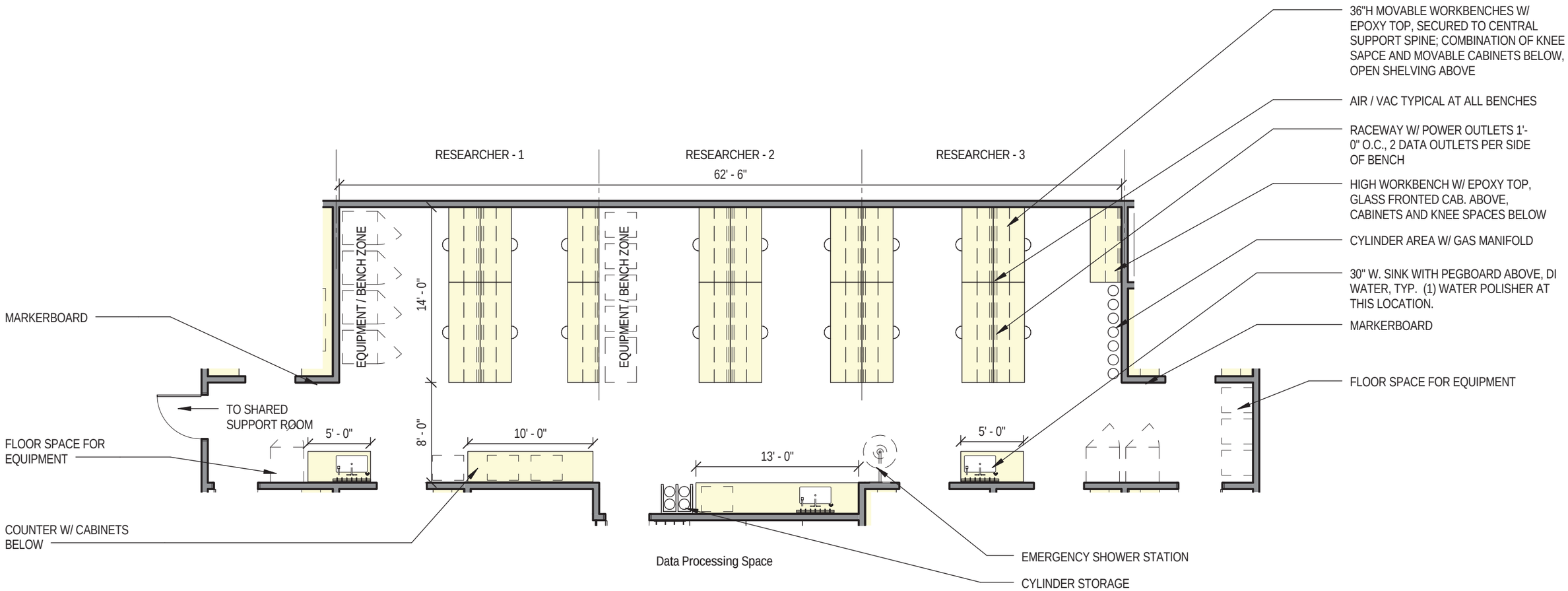

NOTE: PROVISION FOR (6) 240V OUTLETS IN EACH LAB SUITE. EXACT LOCATIONS TO BE DETERMINED.

Scale: 1/8" = 1'-0"

CRSA PAYETTE

5.1.4B Environmental Room / Clean Work Space

Room Data Sheet Detail

Department: Biology
Issue Date: WORK IN PROGRESS
Room No:

Space Information

Room Function: *Research support*
Adjacencies: *Refer to 5.1*
Access: *Faculty, Students*
Room Utilization *24 hrs*
General Notes: Primary user: Stark

Special Requirements

Lighting Controls: *See Proj. Standards, Ch. 3*
Acoustic Req: *See acoustics narrative, Ch. 4*
Structural Req: *None*
Security: *Locked*
Other Spec Req:

Room Size and Capacity

Proposed Area: *Included in 5.1 lab suites*
Total Area: *135 SF*
Room Quantity: *1*
Assigned Cap: *0*
Unassigned Cap: *3*
Total Cap: *3*

Finishes, Doors and Windows

Floor: *Resilient sheet*
Base: *Resilient, Cove*
Walls: *Gyp. Bd.*
Wall Finish: *Paint*
Ceiling: *ACT (2'x2')*
Ceiling Height:

Door Size: *3'-6" single leaf*
Door Type: *Wood*
Door Vis Panel: *Yes*
Window Treat: *Light-filtering*
Window Skylight: *None*

Casework and Built-ins

Wall Cabinets: *Wood*
Base Cabinets: *Wood*
Counter Tops: *Epoxy Resin*
Counter (LF): *See diagram*
Counter Height: *36" UON*

Shelving (LF): *Yes*
Drawer Units: *Yes*
White Boards: *No*
Tack Boards *None*
Proj. Screen: *None*

Communications

See Project Design Standards in Chapter 3 and electrical/telecomm narrative in Chapter 4

HVAC

Air Changes: *Research Lab Standard*
Air Circulation: *Research Lab Standard*
Pressure: *Negative to corridor*
Temperature: *Research Lab Standard*
Rel. Humidity: *Research Lab Standard*
Local Exhaust: *As noted*
Air Filtration: *Research Lab Standard*
CO2 Sensor: *Research Lab Standard*
Distribution: *Research Lab Standard*
Other HVAC:

Electrical

See Project Design Standards in Chapter 3 and electrical/telecomm narrative in Chapter 4

Plumbing

Sinks: *Stainless Steel*
Pure Water: *Only as indicated*
Hot/Cold Water: *Yes*
Hose Bibb: *None*
Floor Drain: *None*
Waste: *Lab Waste*
Emer. Eyewash: *None*
Emer. Station: *None*
Gases:
Comp. Air: *None*
Lab Gas: *None*
Vacuum: *None*
CO^2: *None*
Other Gas:
Fire Protection: *Wet Sprinkler*

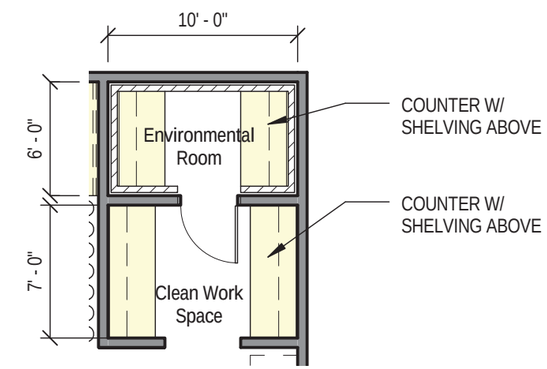

Equipment

Type	Count	Status

Furniture

Type	Count	Status

Status Key: **1** = Furnished and Installed by Contractor (CFCI), **2** = Furnished by Owner, Contractor Installed (OFCI), **3** = Furnished and Installed by Owner (OFOI), **4** = Provided Outside of Project Budget

Scale: 1/8" = 1'-0"

CRSA PAYETTE

5.1.4C Glassware Wash Room

Room Data Sheet Detail

Department: Biology
Issue Date: WORK IN PROGRESS
Room No:

Space Information

Room Function: Research support
Adjacencies: Refer to 5.1
Access: Faculty, Students
Room Utilization 24 hrs
General Notes: Primary users: Baker and Stark

Special Requirements

Lighting Controls: See Proj. Standards, Ch. 3
Acoustic Req: See acoustics narrative, Ch. 4
Structural Req: None
Security: Locked
Other Spec Req:

Room Size and Capacity

Proposed Area: Included in 5.1 lab suites
Total Area: 125 SF
Room Quantity: 1
Assigned Cap: 0
Unassigned Cap: 3
Total Cap: 3

Finishes, Doors and Windows

Floor: Resilient Tile
Base: Resilient, Cove
Walls: Gyp. Bd.
Wall Finish: Paint
Ceiling: ACT (2'x2')
Ceiling Height:

Door Size: 3'-6" single leaf
Door Type: Wood
Door Vis Panel: Yes
Window Treat: Light-filtering
Window Skylight: None

Casework and Built-ins

Wall Cabinets: Wood
Base Cabinets: Wood
Counter Tops: Epoxy Resin
Counter (LF): See diagram
Counter Height: 36" UON

Shelving (LF): Yes
Drawer Units: Yes
White Boards: No
Tack Boards None
Proj. Screen: None

Communications

See Project Design Standards in Chapter 3 and electrical/telecomm narrative in Chapter 4

HVAC

Air Changes: Research Lab Standard
Air Circulation: Research Lab Standard
Pressure: Negative to corridor
Temperature: Research Lab Standard
Rel. Humidity: Research Lab Standard
Local Exhaust: As noted
Air Filtration: Research Lab Standard
CO2 Sensor: Research Lab Standard
Distribution: Research Lab Standard
Other HVAC:

Electrical

See Project Design Standards in Chapter 3 and electrical/telecomm narrative in Chapter 4

Plumbing

Sinks: Epoxy resin, grey
Pure Water: Only as indicated
Hot/Cold Water: Yes
Hose Bibb: None
Floor Drain: None
Waste: Lab Waste
Emer. Eyewash: None
Emer. Station: None
Gases:
Comp. Air: None
Lab Gas: None
Vacuum: None
CO^2: None
Other Gas:
Fire Protection: Wet Sprinkler

Equipment

Type	Count	Status
Undercounter Glassware Washer	2	3

Furniture

Type	Count	Status

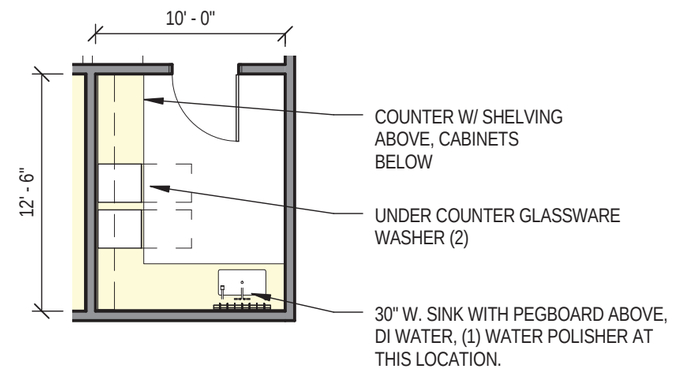

Status Key: **1** = Furnished and Installed by Contractor (CFCI), **2** = Furnished by Owner, Contractor Installed (OFCI), **3** = Furnished and Installed by Owner (OFOI), **4** = Provided Outside of Project Budget

Scale: 1/8" = 1'-0"

CRSA PAYETTE

5.1.4D Dirty Sample Processing Room

Room Data Sheet Detail

Department: Biology
Issue Date: WORK IN PROGRESS
Room No:

Space Information

Room Function: Research support
Adjacencies: Refer to 5.1
Access: Faculty, Students
Room Utilization 24 hrs
General Notes: Primary users: Baker

Special Requirements

Lighting Controls: See Proj. Standards, Ch. 3
Acoustic Req: See acoustics narrative, Ch. 4
Structural Req: None
Security: Locked
Other Spec Req:

Room Size and Capacity

Proposed Area: Included in 5.1 lab suites
Total Area: 125 SF
Room Quantity: 1
Assigned Cap: 0
Unassigned Cap: 3
Total Cap: 3

Finishes, Doors and Windows

Floor: Resilient Tile
Base: Resilient, Cove
Walls: Gyp. Bd.
Wall Finish: Paint
Ceiling: ACT (2'x2')
Ceiling Height:

Door Size: 3'-6" single leaf
Door Type: Wood
Door Vis Panel: Yes
Window Treat: Light-filtering
Window Skylight: None

Casework and Built-ins

Wall Cabinets: Wood
Base Cabinets: Wood
Counter Tops: Epoxy Resin
Counter (LF): See diagram
Counter Height: 36" UON

Shelving (LF): Yes
Drawer Units: Yes
White Boards: No
Tack Boards None
Proj. Screen: None

Communications

See Project Design Standards in Chapter 3 and electrical/telecomm narrative in Chapter 4

HVAC

Air Changes: Research Lab Standard
Air Circulation: Research Lab Standard
Pressure: Negative to corridor
Temperature: Research Lab Standard
Rel. Humidity: Research Lab Standard
Local Exhaust: As noted
Air Filtration: Research Lab Standard
CO2 Sensor: Research Lab Standard
Distribution: Research Lab Standard
Other HVAC:

Electrical

See Project Design Standards in Chapter 3 and electrical/telecomm narrative in Chapter 4

Plumbing

Sinks: Epoxy resin, grey
Pure Water: Only as indicated
Hot/Cold Water: Yes
Hose Bibb: None
Floor Drain: None
Waste: Lab Waste
Emer. Eyewash: None
Emer. Station: None
Gases:
- Comp. Air: None
- Lab Gas: None
- Vacuum: None
- CO^2: None
- Other Gas:

Fire Protection: Wet Sprinkler

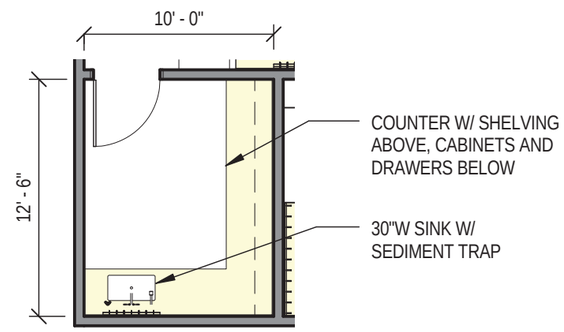

Equipment

Type	Count	Status

Furniture

Type	Count	Status

Status Key: **1** = Furnished and Installed by Contractor (CFCI), **2** = Furnished by Owner, Contractor Installed (OFCI), **3** = Furnished and Installed by Owner (OFOI), **4** = Provided Outside of Project Budget

Scale: 1/8" = 1'-0"

CRSA PAYETTE

5.1.4E Mass Spec Room

Room Data Sheet Detail

Department: Biology
Issue Date: WORK IN PROGRESS
Room No:

Space Information

Room Function: Research support
Adjacencies: Refer to 5.1
Access: Faculty, Students
Room Utilization 24 hrs
General Notes: Primary users: Stark

Special Requirements

Lighting Controls: See Proj. Standards, Ch. 3
Acoustic Req: See acoustics narrative, Ch. 4
Structural Req: None
Security: Locked
Other Spec Req:

Room Size and Capacity

Proposed Area: Included in 5.1 lab suites
Total Area: 135 SF
Room Quantity: 1
Assigned Cap: 0
Unassigned Cap: 3
Total Cap: 3

Finishes, Doors and Windows

Floor: Resilient Tile
Base: Resilient, Cove
Walls: Gyp. Bd.
Wall Finish: Paint
Ceiling: ACT (2'x2')
Ceiling Height:

Door Size: 3'-6" single leaf
Door Type: Wood
Door Vis Panel: Yes
Window Treat: Light-filtering
Window Skylight: None

Casework and Built-ins

Wall Cabinets: Wood
Base Cabinets: Wood
Counter Tops: Epoxy Resin
Counter (LF): See diagram
Counter Height: 36" UON

Shelving (LF): None
Drawer Units: Yes
White Boards: No
Tack Boards None
Proj. Screen: None

Communications

See Project Design Standards in Chapter 3 and electrical/telecomm narrative in Chapter 4

HVAC

Air Changes: Research Lab Standard
Air Circulation: Research Lab Standard
Pressure: Negative to corridor
Temperature: Research Lab Standard
Rel. Humidity: Research Lab Standard
Local Exhaust: As noted
Air Filtration: Research Lab Standard
CO2 Sensor: Research Lab Standard
Distribution: Research Lab Standard
Other HVAC:

Electrical

See Project Design Standards in Chapter 3 and electrical/telecomm narrative in Chapter 4

Plumbing

Sinks: Epoxy resin, grey
Pure Water: Only as indicated
Hot/Cold Water: Yes
Hose Bibb: None
Floor Drain: None
Waste: Lab Waste
Emer. Eyewash: None
Emer. Station: None
Gases:
Comp. Air: None
Lab Gas: None
Vacuum: None
CO^2: None
Other Gas:
Fire Protection: Wet Sprinkler

Equipment

Type	Count	Status
4' Fume Hood	1	1
Mass Spec	1	4

Furniture

Type	Count	Status

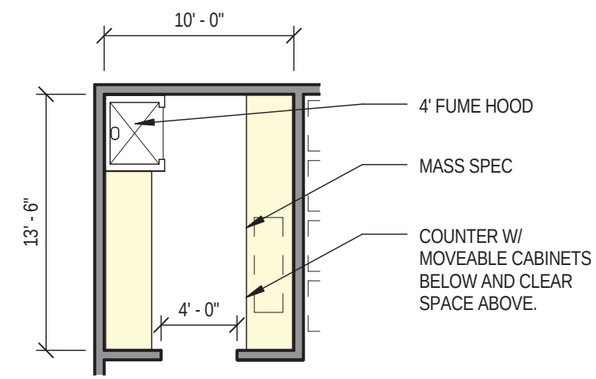

Status Key: **1** = Furnished and Installed by Contractor (CFCI), **2** = Furnished by Owner, Contractor Installed (OFCI), **3** = Furnished and Installed by Owner (OFOI), **4** = Provided Outside of Project Budget

Scale: 1/8" = 1'-0"

CRSA PAYETTE

5.1.5A Open Lab Bench Area

Room Data Sheet Detail

Department: Biology
Issue Date: WORK IN PROGRESS
Room No:

Space Information

Room Function: *Shared open research lab*
Adjacencies: *Refer to 5.1*
Access: *Faculty, Students*
Room Utilization *24 hrs*
General Notes: Based on interviews with von Dohlen and Wolf

Special Requirements

Lighting Controls: *See Proj. Standards, Ch. 3*
Acoustic Req: *See acoustics narrative, Ch. 4*
Structural Req: *None*
Security: *Locked*
Other Spec Req:

Room Size and Capacity

Proposed Area: *Included in 5.1 lab suites*
Total Area: *1595 SF*
Room Quantity: *1*
Assigned Cap: *3*
Unassigned Cap: *6*
Total Cap: *9*

Finishes, Doors and Windows

Floor: *Resilient Tile*
Base: *Resilient, Cove*
Walls: *Gyp. Bd.*
Wall Finish: *Paint*
Ceiling: *ACT (2'x2') clouds*
Ceiling Height: *10'-0" min.*

Door Size: *3'-6" single leaf*
Door Type: *Wood*
Door Vis Panel: *Yes*
Window Treat: *Light-filtering*
Window Skylight: *None*

Casework and Built-ins

Wall Cabinets: *Wood*
Base Cabinets: *Wood*
Counter Tops: *Epoxy Resin*
Counter (LF): *See diagram*
Counter Height: *36" UON*

Shelving (LF): *Yes*
Drawer Units: *Yes*
White Boards: *Yes, as noted*
Tack Boards *None*
Proj. Screen: *None*

Communications

See Project Design Standards in Chapter 3 and electrical/telecomm narrative in Chapter 4

HVAC

Air Changes: *Research Lab Standard*
Air Circulation: *Research Lab Standard*
Pressure: *Negative to corridor*
Temperature: *Research Lab Standard*
Rel. Humidity: *Research Lab Standard*
Local Exhaust: *As noted*
Air Filtration: *Research Lab Standard*
CO2 Sensor: *Research Lab Standard*
Distribution: *Research Lab Standard*
Other HVAC:

Electrical

See Project Design Standards in Chapter 3 and electrical/telecomm narrative in Chapter 4

Plumbing

Sinks: *Epoxy resin, grey*
Pure Water: *Only as indicated*
Hot/Cold Water: *Yes*
Hose Bibb: *None*
Floor Drain: *None*
Waste: *Lab Waste*
Emer. Eyewash: *Yes*
Emer. Station: *Yes*
Gases:
Comp. Air: *Yes, as noted*
Lab Gas: *None*
Vacuum: *Yes, as noted*
CO^2: *None*
Other Gas:
Fire Protection: *Wet Sprinkler*

Equipment

Type	Count	Status
4x1 Gas Cylinder Rack	1	1
6' Laminar Flow Hood	1	2
32"x32" Refrigerator	7	4
Generic Equipment	12	4
Generic Gas Tank	4	4

Furniture

Type	Count	Status
Lab Stool	18	3

See Appendix Section 6.2, for individual researchers' equipment sheets (Status 4) for Lab Suite 5.1.5

Status Key: **1** = Furnished and Installed by Contractor (CFCI), **2** = Furnished by Owner, Contractor Installed (OFCI), **3** = Furnished and Installed by Owner (OFOI), **4** = Provided Outside of Project Budget

CRSA PAYETTE

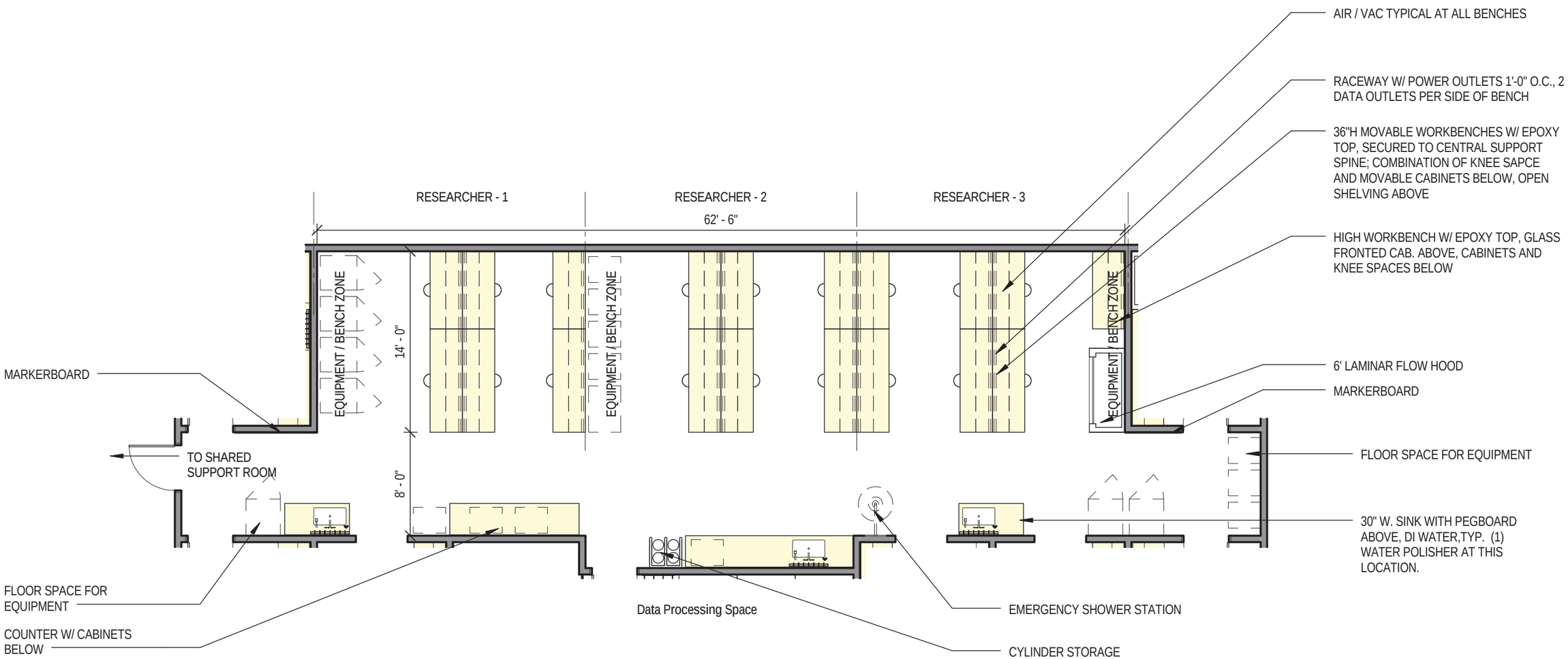

NOTE: PROVISION FOR (6) 240V OUTLETS IN EACH LAB SUITE. EXACT LOCATIONS TO BE DETERMINED.

Scale: 1/8" = 1'-0"

CRSA PAYETTE

5.1.5B RNA Room

Room Data Sheet Detail

Department: Biology
Issue Date: WORK IN PROGRESS
Room No:

Space Information

Room Function: Research support
Adjacencies: Refer to 5.1
Access: Faculty, Students
Room Utilization 24 hrs
General Notes: Primary user: von Dohlen

Special Requirements

Lighting Controls: See Proj. Standards, Ch. 3
Acoustic Req: See acoustics narrative, Ch. 4
Structural Req: None
Security: Locked
Other Spec Req:

Room Size and Capacity

Proposed Area: Included in 5.1 lab suites
Total Area: 135 SF
Room Quantity: 1
Assigned Cap: 0
Unassigned Cap: 3
Total Cap: 3

Finishes, Doors and Windows

Floor: Resilient Tile
Base: Resilient, Cove
Walls: Gyp. Bd.
Wall Finish: Paint
Ceiling: ACT (2'x2')
Ceiling Height:

Door Size: 3'-6" single leaf
Door Type: Wood
Door Vis Panel: Yes
Window Treat: Light-filtering
Window Skylight: None

Casework and Built-ins

Wall Cabinets: Wood
Base Cabinets: Wood
Counter Tops: Epoxy Resin
Counter (LF): See diagram
Counter Height: 36" UON

Shelving (LF): Yes
Drawer Units: Yes
White Boards: No
Tack Boards None
Proj. Screen: None

Communications

See Project Design Standards in Chapter 3 and electrical/telecomm narrative in Chapter 4

HVAC

Air Changes: Research Lab Standard
Air Circulation: Research Lab Standard
Pressure: Negative to corridor
Temperature: Research Lab Standard
Rel. Humidity: Research Lab Standard
Local Exhaust: As noted
Air Filtration: Research Lab Standard
CO2 Sensor: Research Lab Standard
Distribution: Research Lab Standard
Other HVAC:

Electrical

See Project Design Standards in Chapter 3 and electrical/telecomm narrative in Chapter 4

Plumbing

Sinks: Epoxy resin, grey
Pure Water: Only as indicated
Hot/Cold Water: Yes
Hose Bibb: None
Floor Drain: None
Waste: Lab Waste
Emer. Eyewash: None
Emer. Station: None
Gases:
Comp. Air: Yes, as noted
Lab Gas: None
Vacuum: Yes, as noted
CO^2: None
Other Gas:
Fire Protection: Wet Sprinkler

Equipment

Type	Count	Status
4' Laminar Flow Hood	1	2

Furniture

Type	Count	Status

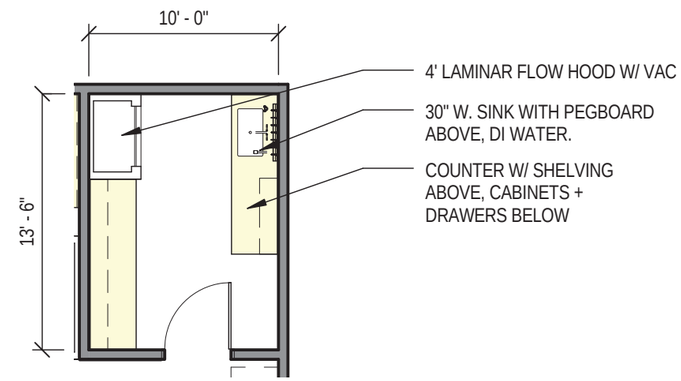

Status Key: **1** = Furnished and Installed by Contractor (CFCI), **2** = Furnished by Owner, Contractor Installed (OFCI), **3** = Furnished and Installed by Owner (OFOI), **4** = Provided Outside of Project Budget

Scale: 1/8" = 1'-0"

CRSA PAYETTE

5.1.5C DNA Extraction Room

Room Data Sheet Detail

Department: Biology
Issue Date: WORK IN PROGRESS
Room No:

Space Information

Room Function: Research support
Adjacencies: Refer to 5.1
Access: Faculty, Students
Room Utilization 24 hrs
General Notes: Primary user: Wolf

Special Requirements

Lighting Controls: See Proj. Standards, Ch. 3
Acoustic Req: See acoustics narrative, Ch. 4
Structural Req: None
Security: Locked
Other Spec Req:

Room Size and Capacity

Proposed Area: Included in 5.1 lab suites
Total Area: 125 SF
Room Quantity: 1
Assigned Cap: 0
Unassigned Cap: 3
Total Cap: 3

Finishes, Doors and Windows

Floor: Resilient Tile
Base: Resilient, Cove
Walls: Gyp. Bd.
Wall Finish: Paint
Ceiling: ACT (2'x2')
Ceiling Height:

Door Size: 3'-6" single leaf
Door Type: Wood
Door Vis Panel: Yes
Window Treat: Light-filtering
Window Skylight: None

Casework and Built-ins

Wall Cabinets: Wood
Base Cabinets: Wood
Counter Tops: Epoxy Resin
Counter (LF): See diagram
Counter Height: 36" UON

Shelving (LF): Yes
Drawer Units: Yes
White Boards: No
Tack Boards None
Proj. Screen: None

Communications

See Project Design Standards in Chapter 3 and electrical/telecomm narrative in Chapter 4

HVAC

Air Changes: Research Lab Standard
Air Circulation: Research Lab Standard
Pressure: Negative to corridor
Temperature: Research Lab Standard
Rel. Humidity: Research Lab Standard
Local Exhaust: As noted
Air Filtration: Research Lab Standard
CO2 Sensor: Research Lab Standard
Distribution: Research Lab Standard
Other HVAC:

Electrical

See Project Design Standards in Chapter 3 and electrical/telecomm narrative in Chapter 4

Plumbing

Sinks: Epoxy resin, grey
Pure Water: Only as indicated
Hot/Cold Water: Yes
Hose Bibb: None
Floor Drain: None
Waste: Lab Waste
Emer. Eyewash: None
Emer. Station: None
Gases:
- *Comp. Air:* None
- *Lab Gas:* None
- *Vacuum:* None
- *CO^2:* None
- *Other Gas:*

Fire Protection: Wet Sprinkler

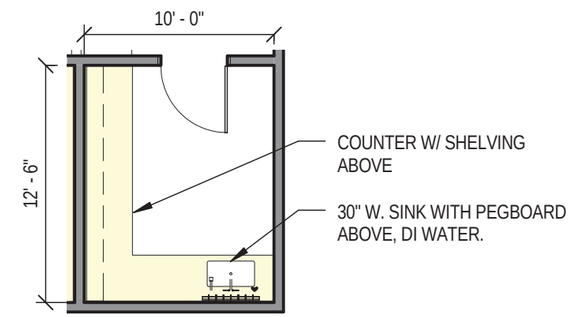

Equipment

Type	Count	Status

Furniture

Type	Count	Status

Status Key: **1** = Furnished and Installed by Contractor (CFCI), **2** = Furnished by Owner, Contractor Installed (OFCI), **3** = Furnished and Installed by Owner (OFOI), **4** = Provided Outside of Project Budget

Scale: 1/8" = 1'-0"

CRSA PAYETTE

5.1.6A Open Lab Bench Area

Room Data Sheet Detail

Department: Biology
Issue Date: WORK IN PROGRESS
Room No:

Space Information

Room Function: *Shared open research lab*
Adjacencies: *Refer to 5.1*
Access: *Faculty, Students*
Room Utilization *24 hrs*
General Notes: Based on interviews with Kropp, Takemoto and Welker

Special Requirements

Lighting Controls: *See Proj. Standards, Ch. 3*
Acoustic Req: *See acoustics narrative, Ch. 4*
Structural Req: *None*
Security: *Locked*
Other Spec Req:

Room Size and Capacity

Proposed Area: *Included in 5.1 lab suites*
Total Area: *1595 SF*
Room Quantity: *1*
Assigned Cap: *3*
Unassigned Cap: *6*
Total Cap: *9*

Finishes, Doors and Windows

Floor: *Resilient Tile*
Base: *Resilient, Cove*
Walls: *Gyp. Bd.*
Wall Finish: *Paint*
Ceiling: *ACT (2'x2') clouds*
Ceiling Height: *10'-0" min.*

Door Size: *3'-6" single leaf*
Door Type: *Wood*
Door Vis Panel: *Yes*
Window Treat: *Light-filtering*
Window Skylight: *None*

Casework and Built-ins

Wall Cabinets: *Wood*
Base Cabinets: *Wood*
Counter Tops: *Epoxy Resin*
Counter (LF): *See diagram*
Counter Height: *36" UON*

Shelving (LF): *Yes*
Drawer Units: *Yes*
White Boards: *Yes, as noted*
Tack Boards *None*
Proj. Screen: *None*

Communications

See Project Design Standards in Chapter 3 and electrical/telecomm narrative in Chapter 4

HVAC

Air Changes: *Research Lab Standard*
Air Circulation: *Research Lab Standard*
Pressure: *Negative to corridor*
Temperature: *Research Lab Standard*
Rel. Humidity: *Research Lab Standard*
Local Exhaust: *As noted*
Air Filtration: *Research Lab Standard*
CO2 Sensor: *Research Lab Standard*
Distribution: *Research Lab Standard*
Other HVAC:

Electrical

See Project Design Standards in Chapter 3 and electrical/telecomm narrative in Chapter 4

Plumbing

Sinks: *Epoxy resin, grey*
Pure Water: *Only as indicated*
Hot/Cold Water: *Yes*
Hose Bibb: *None*
Floor Drain: *None*
Waste: *Lab Waste*
Emer. Eyewash: *Yes*
Emer. Station: *Yes*
Gases:
Comp. Air: *Yes, as noted*
Lab Gas: *None*
Vacuum: *Yes, as noted*
CO^2: *None*
Other Gas:
Fire Protection: *Wet Sprinkler*

Equipment

Type	Count	Status
4x1 Gas Cylinder Rack	1	1
6' Laminar Flow Hood	2	2
32"x32" Refrigerator	5	4
Generic Equipment	12	4
Generic Gas Tank	4	4

See Appendix Section 6.2, for individual researchers' equipment sheets (Status 4) for Lab Suite 5.1.6

Furniture

Type	Count	Status
Lab Stool	18	3

Status Key: **1** = Furnished and Installed by Contractor (CFCI), **2** = Furnished by Owner, Contractor Installed (OFCI), **3** = Furnished and Installed by Owner (OFOI), **4** = Provided Outside of Project Budget

CRSA PAYETTE

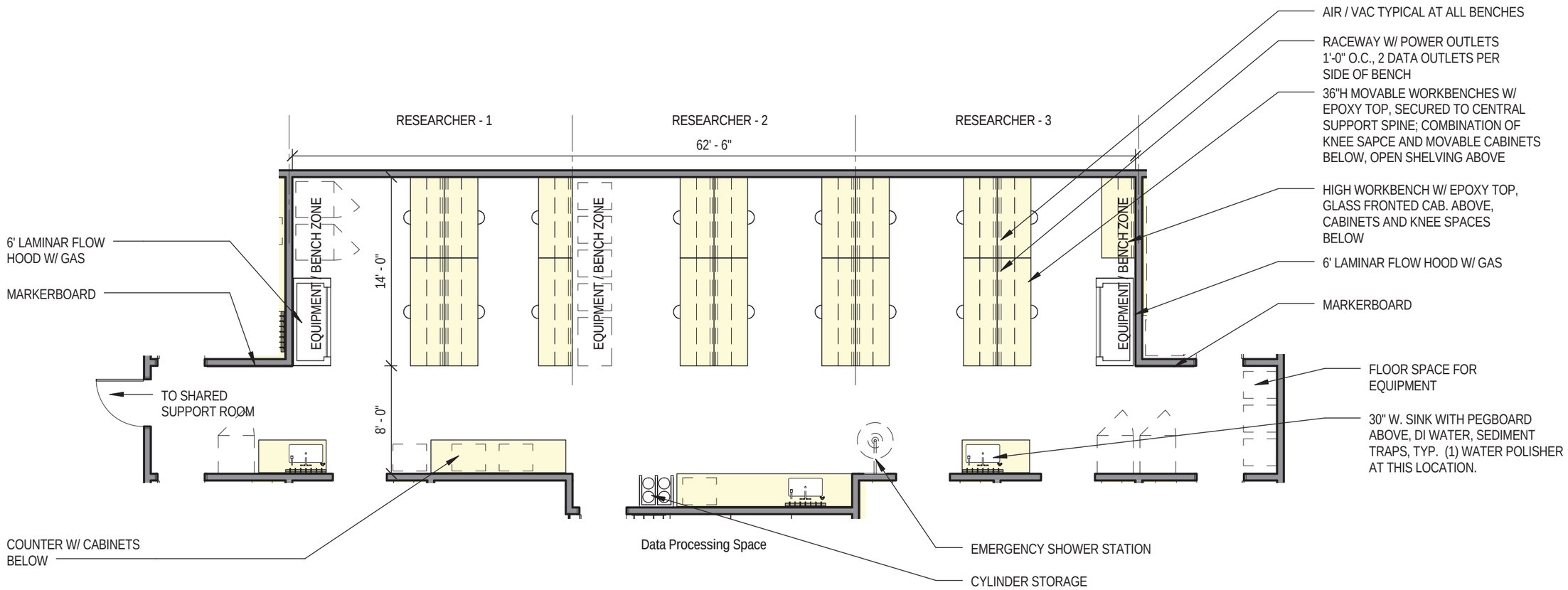

NOTE: PROVISION FOR (6) 240V OUTLETS IN EACH LAB SUITE. EXACT LOCATIONS TO BE DETERMINED.

Scale: 1/8" = 1'-0"

CRSA PAYETTE

5.1.6B HPLC Room

Room Data Sheet Detail

Department: Biology
Issue Date: WORK IN PROGRESS
Room No:

Space Information

Room Function: Research support
Adjacencies: Refer to 5.1
Access: Faculty, Students
Room Utilization 24 hrs
General Notes: Primary user: Takemoto

Special Requirements

Lighting Controls: See Proj. Standards, Ch. 3
Acoustic Req: See acoustics narrative, Ch. 4
Structural Req: None
Security: Locked
Other Spec Req:

Room Size and Capacity

Proposed Area: Included in 5.1 lab suites
Total Area: 135 SF
Room Quantity: 1
Assigned Cap: 0
Unassigned Cap: 3
Total Cap: 3

Finishes, Doors and Windows

Floor: Resilient Tile
Base: Resilient, Cove
Walls: Gyp. Bd.
Wall Finish: Paint
Ceiling: ACT (2'x2')
Ceiling Height:

Door Size: 3'-6" single leaf
Door Type: Wood
Door Vis Panel: Yes
Window Treat: Light-filtering
Window Skylight: None

Casework and Built-ins

Wall Cabinets: Wood
Base Cabinets: Wood
Counter Tops: Epoxy Resin
Counter (LF): See diagram
Counter Height: 36" UON

Shelving (LF): None
Drawer Units: Yes
White Boards: No
Tack Boards None
Proj. Screen: None

Communications

See Project Design Standards in Chapter 3 and electrical/telecomm narrative in Chapter 4

HVAC

Air Changes: Research Lab Standard
Air Circulation: Research Lab Standard
Pressure: Negative to corridor
Temperature: Research Lab Standard
Rel. Humidity: Research Lab Standard
Local Exhaust: As noted
Air Filtration: Research Lab Standard
CO2 Sensor: Research Lab Standard
Distribution: Research Lab Standard
Other HVAC:

Electrical

See Project Design Standards in Chapter 3 and electrical/telecomm narrative in Chapter 4

Plumbing

Sinks: Epoxy resin, grey
Pure Water: Only as indicated
Hot/Cold Water: Yes
Hose Bibb: None
Floor Drain: None
Waste: Lab Waste
Emer. Eyewash: None
Emer. Station: None
Gases:
- Comp. Air: None
- Lab Gas: None
- Vacuum: None
- CO^2: None
- Other Gas:

Fire Protection: Wet Sprinkler

Equipment

Type	Count	Status
32"x32" Refrigerator	1	4
Chromatography System	1	4
Liquid Chromatography (HPLC) System	1	4

Furniture

Type	Count	Status

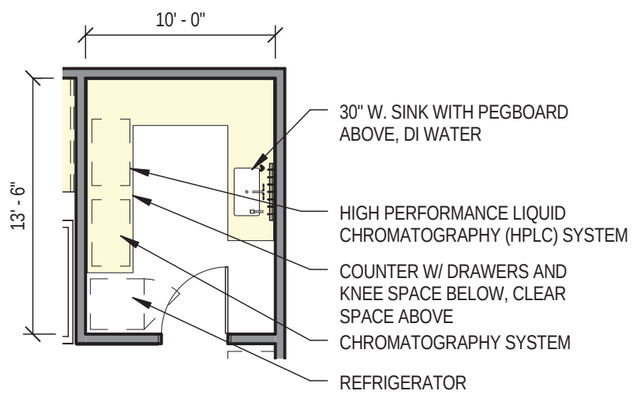

Status Key: **1** = Furnished and Installed by Contractor (CFCI), **2** = Furnished by Owner, Contractor Installed (OFCI), **3** = Furnished and Installed by Owner (OFOI), **4** = Provided Outside of Project Budget

Scale: 1/8" = 1'-0"

CRSA PAYETTE

5.1.6C Microscope Room

Room Data Sheet Detail

Department: Biology
Issue Date: WORK IN PROGRESS
Room No:

Space Information

Room Function: Research support
Adjacencies: Refer to 5.1
Access: Faculty, Students
Room Utilization 24 hrs
General Notes: Primary user: Kropp

Special Requirements

Lighting Controls: See Proj. Standards, Ch. 3
Acoustic Req: See acoustics narrative, Ch. 4
Structural Req: None
Security: Locked
Other Spec Req:

Room Size and Capacity

Proposed Area: Included in 5.1 lab suites
Total Area: 135 SF
Room Quantity: 1
Assigned Cap: 0
Unassigned Cap: 3
Total Cap: 3

Finishes, Doors and Windows

Floor: Resilient Tile
Base: Resilient, Cove
Walls: Gyp. Bd.
Wall Finish: Paint
Ceiling: ACT (2'x2')
Ceiling Height:

Door Size: 3'-6" single leaf
Door Type: Wood
Door Vis Panel: Yes
Window Treat: Light-filtering
Window Skylight: None

Casework and Built-ins

Wall Cabinets: Wood
Base Cabinets: Wood
Counter Tops: Epoxy Resin
Counter (LF): See diagram
Counter Height: 36" UON

Shelving (LF): Yes
Drawer Units: Yes
White Boards: No
Tack Boards None
Proj. Screen: None

Communications

See Project Design Standards in Chapter 3 and electrical/telecomm narrative in Chapter 4

HVAC

Air Changes: Research Lab Standard
Air Circulation: Research Lab Standard
Pressure: Negative to corridor
Temperature: Research Lab Standard
Rel. Humidity: Research Lab Standard
Local Exhaust: As noted
Air Filtration: Research Lab Standard
CO2 Sensor: Research Lab Standard
Distribution: Research Lab Standard
Other HVAC:

Electrical

See Project Design Standards in Chapter 3 and electrical/telecomm narrative in Chapter 4

Plumbing

Sinks: Epoxy resin, grey
Pure Water: Only as indicated
Hot/Cold Water: Yes
Hose Bibb: None
Floor Drain: None
Waste: Lab Waste
Emer. Eyewash: None
Emer. Station: None
Gases:
Comp. Air: None
Lab Gas: None
Vacuum: None
CO^2: None
Other Gas:
Fire Protection: Wet Sprinkler

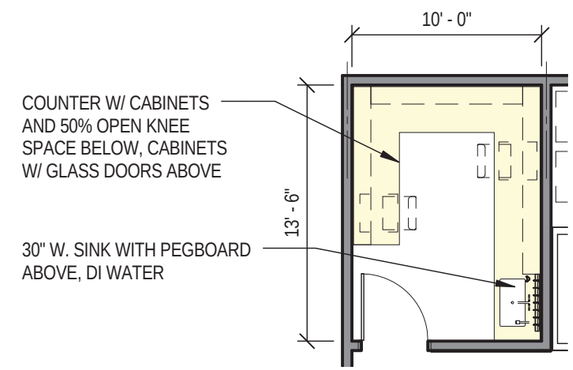

Equipment

Type	Count	Status
Microscope	2	4

Furniture

Type	Count	Status
Task Chair	2	3

Status Key: **1** = Furnished and Installed by Contractor (CFCI), **2** = Furnished by Owner, Contractor Installed (OFCI), **3** = Furnished and Installed by Owner (OFOI), **4** = Provided Outside of Project Budget

Scale: 1/8" = 1'-0"

CRSA PAYETTE

5.1.7A Open Lab Bench Area

Room Data Sheet Detail

Department: Biology
Issue Date: WORK IN PROGRESS
Room No:

Space Information

Room Function: *Shared open research lab*
Adjacencies: *Refer to 5.1*
Access: *Faculty, Students*
Room Utilization *24 hrs*
General Notes: Based on interviews with Kapheim, Bernhardt, and Gompert

Special Requirements

Lighting Controls: *See Proj. Standards, Ch. 3*
Acoustic Req: *See acoustics narrative, Ch. 4*
Structural Req: *None*
Security: *Locked*
Other Spec Req:

Room Size and Capacity

Proposed Area: *Included in 5.1 lab suites*
Total Area: *1449 SF*
Room Quantity: *1*
Assigned Cap: *3*
Unassigned Cap: *6*
Total Cap: *9*

Finishes, Doors and Windows

Floor: *Resilient Tile*
Base: *Resilient, Cove*
Walls: *Gyp. Bd.*
Wall Finish: *Paint*
Ceiling: *ACT (2'x2') clouds*
Ceiling Height: *10'-0" min.*

Door Size: *3'-6" single leaf*
Door Type: *Wood*
Door Vis Panel: *Yes*
Window Treat: *Light-filtering*
Window Skylight: *None*

Casework and Built-ins

Wall Cabinets: *Wood*
Base Cabinets: *Wood*
Counter Tops: *Epoxy Resin*
Counter (LF): *See diagram*
Counter Height: *36" UON*

Shelving (LF): *Yes*
Drawer Units: *Yes*
White Boards: *Yes, as noted*
Tack Boards *None*
Proj. Screen: *None*

Communications

See Project Design Standards in Chapter 3 and electrical/telecomm narrative in Chapter 4

HVAC

Air Changes: *Research Lab Standard*
Air Circulation: *Research Lab Standard*
Pressure: *Negative to corridor*
Temperature: *Research Lab Standard*
Rel. Humidity: *Research Lab Standard*
Local Exhaust: *As noted*
Air Filtration: *Research Lab Standard*
CO2 Sensor: *Research Lab Standard*
Distribution: *Research Lab Standard*
Other HVAC:

Electrical

See Project Design Standards in Chapter 3 and electrical/telecomm narrative in Chapter 4

Plumbing

Sinks: *Epoxy resin, grey*
Pure Water: *Only as indicated*
Hot/Cold Water: *Yes*
Hose Bibb: *None*
Floor Drain: *None*
Waste: *Lab Waste*
Emer. Eyewash: *Yes*
Emer. Station: *Yes*
Gases:
Comp. Air: *Yes, as noted*
Lab Gas: *None*
Vacuum: *Yes, as noted*
CO^2: *None*
Other Gas:
Fire Protection: *Wet Sprinkler*

Equipment

Type	Count	Status
4x1 Gas Cylinder Rack	1	1
6' Laminar Flow Hood	1	2
32"x32" Refrigerator	7	4
Computer	4	4
Generic Equipment	10	4
Generic Gas Tank	4	4

Furniture

Type	Count	Status
Lab Stool	16	3

Status Key: **1** = Furnished and Installed by Contractor (CFCI), **2** = Furnished by Owner, Contractor Installed (OFCI), **3** = Furnished and Installed by Owner (OFOI), **4** = Provided Outside of Project Budget

CRSA PAYETTE

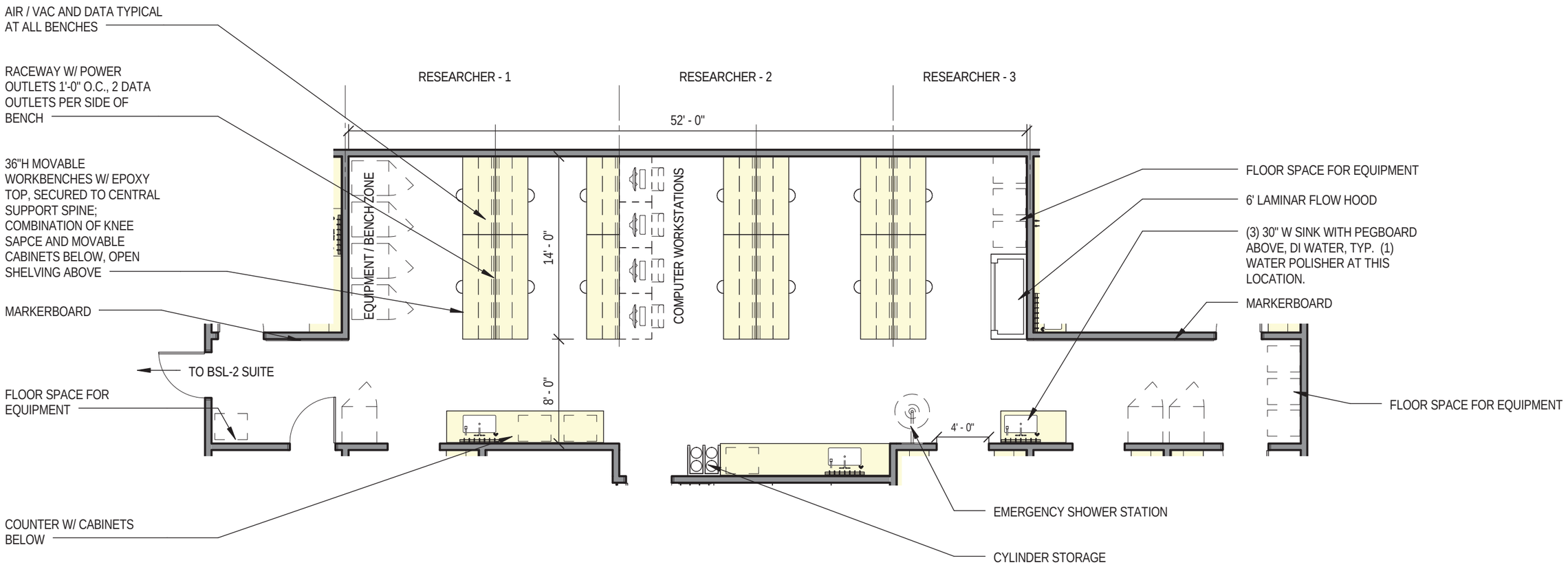

NOTE: PROVISION FOR (6) 240V OUTLETS IN EACH LAB SUITE. EXACT LOCATIONS TO BE DETERMINED.

Scale: 1/8" = 1'-0"

CRSA PAYETTE

5.1.7B Post-PCR Room

Room Data Sheet Detail

Department: Biology
Issue Date: WORK IN PROGRESS
Room No:

Space Information

Room Function: Research support
Adjacencies: Refer to 5.1
Access: Faculty, Students
Room Utilization 24 hrs
General Notes: Primary users: Gompert and Kapheim

Special Requirements

Lighting Controls: See Proj. Standards, Ch. 3
Acoustic Req: See acoustics narrative, Ch. 4
Structural Req: None
Security: Locked
Other Spec Req:

Room Size and Capacity

Proposed Area: Included in 5.1 lab suites
Total Area: 273 SF
Room Quantity: 1
Assigned Cap: 0
Unassigned Cap: 3
Total Cap: 3

Finishes, Doors and Windows

Floor: Resilient Tile
Base: Resilient, Cove
Walls: Gyp. Bd.
Wall Finish: Paint
Ceiling: ACT (2'x2')
Ceiling Height:

Door Size: 3'-6" single leaf
Door Type: Wood
Door Vis Panel: Yes
Window Treat: Light-filtering
Window Skylight: None

Casework and Built-ins

Wall Cabinets: Wood
Base Cabinets: Wood
Counter Tops: Epoxy Resin
Counter (LF): See diagram
Counter Height: 36" UON

Shelving (LF): Yes
Drawer Units: Yes
White Boards: No
Tack Boards None
Proj. Screen: None

Communications

See Project Design Standards in Chapter 3 and electrical/telecomm narrative in Chapter 4

HVAC

Air Changes: Research Lab Standard
Air Circulation: Research Lab Standard
Pressure: Negative to corridor
Temperature: Research Lab Standard
Rel. Humidity: Research Lab Standard
Local Exhaust: As noted
Air Filtration: Research Lab Standard
CO2 Sensor: Research Lab Standard
Distribution: Research Lab Standard
Other HVAC:

Electrical

See Project Design Standards in Chapter 3 and electrical/telecomm narrative in Chapter 4

Plumbing

Sinks: Epoxy resin, grey
Pure Water: Only as indicated
Hot/Cold Water: Yes
Hose Bibb: None
Floor Drain: None
Waste: Lab Waste
Emer. Eyewash: None
Emer. Station: None
Gases:
Comp. Air: None
Lab Gas: None
Vacuum: None
CO^2: None
Other Gas:
Fire Protection: Wet Sprinkler

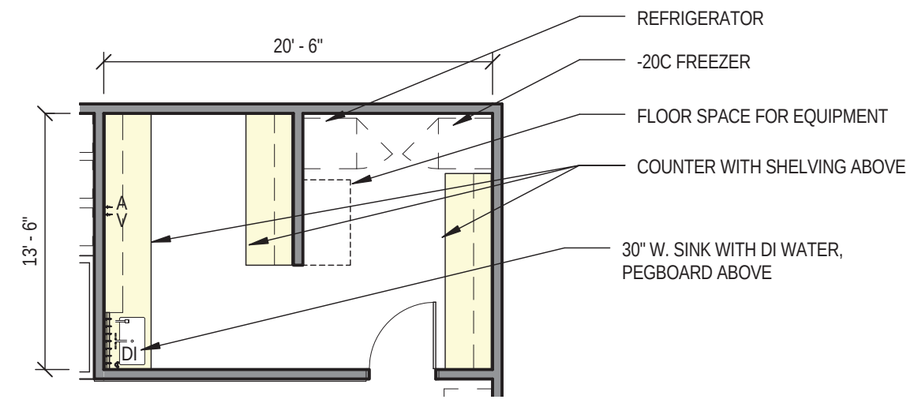

Equipment

Type	Count	Status
-20C Freezer	1	4
32"x32" Refrigerator	1	4

Furniture

Type	Count	Status

Status Key: **1** = Furnished and Installed by Contractor (CFCI), **2** = Furnished by Owner, Contractor Installed (OFCI), **3** = Furnished and Installed by Owner (OFOI), **4** = Provided Outside of Project Budget

Scale: 1/8" = 1'-0"

CRSA PAYETTE

5.1.7C RNA Room

Room Data Sheet Detail

Department: Biology
Issue Date: WORK IN PROGRESS
Room No:

Space Information

Room Function: Research support
Adjacencies: Refer to 5.1
Access: Faculty, Students
Room Utilization 24 hrs
General Notes: Primary users: Gompert and Kapheim

Special Requirements

Lighting Controls: See Proj. Standards, Ch. 3
Acoustic Req: See acoustics narrative, Ch. 4
Structural Req: None
Security: Locked
Other Spec Req:

Room Size and Capacity

Proposed Area: Included in 5.1 lab suites
Total Area: 125 SF
Room Quantity: 1
Assigned Cap: 0
Unassigned Cap: 3
Total Cap: 3

Finishes, Doors and Windows

Floor: Resilient Tile
Base: Resilient, Cove
Walls: Gyp. Bd.
Wall Finish: Paint
Ceiling: ACT (2'x2')
Ceiling Height:

Door Size: 3'-6" single leaf
Door Type: Wood
Door Vis Panel: Yes
Window Treat: Light-filtering
Window Skylight: None

Casework and Built-ins

Wall Cabinets: Wood
Base Cabinets: Wood
Counter Tops: Epoxy Resin
Counter (LF): See diagram
Counter Height: 36" UON

Shelving (LF): Yes
Drawer Units: Yes
White Boards: No
Tack Boards None
Proj. Screen: None

Communications

See Project Design Standards in Chapter 3 and electrical/telecomm narrative in Chapter 4

HVAC

Air Changes: Research Lab Standard
Air Circulation: Research Lab Standard
Pressure: Negative to corridor
Temperature: Research Lab Standard
Rel. Humidity: Research Lab Standard
Local Exhaust: As noted
Air Filtration: Research Lab Standard
CO2 Sensor: Research Lab Standard
Distribution: Research Lab Standard
Other HVAC:

Electrical

See Project Design Standards in Chapter 3 and electrical/telecomm narrative in Chapter 4

Plumbing

Sinks: Epoxy resin, grey
Pure Water: Only as indicated
Hot/Cold Water: Yes
Hose Bibb: None
Floor Drain: None
Waste: Lab Waste
Emer. Eyewash: None
Emer. Station: None
Gases:
Comp. Air: Yes, as noted
Lab Gas: Yes, as noted
Vacuum: Yes, as noted
CO^2: None
Other Gas:
Fire Protection: Wet Sprinkler

Equipment

Type	Count	Status
5' Fume Hood	1	1

Furniture

Type	Count	Status

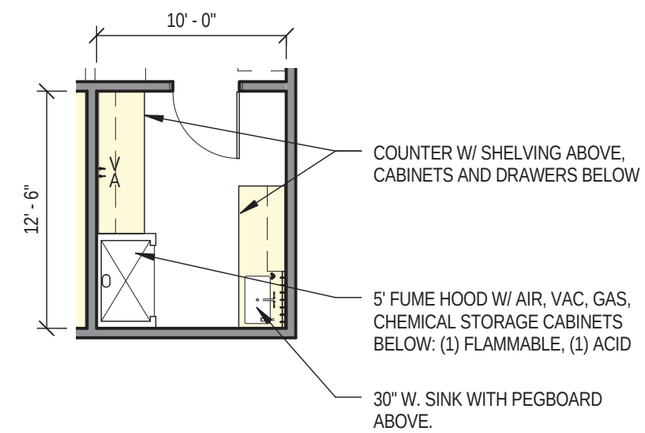

Status Key: **1** = Furnished and Installed by Contractor (CFCI), **2** = Furnished by Owner, Contractor Installed (OFCI), **3** = Furnished and Installed by Owner (OFOI), **4** = Provided Outside of Project Budget

Scale: 1/8" = 1'-0"

CRSA PAYETTE

5.1.7D Insect Rearing Room

Room Data Sheet Detail

Department: Biology
Issue Date: WORK IN PROGRESS
Room No:

Space Information

Room Function: Research support
Adjacencies: Refer to 5.1
Access: Faculty, Students
Room Utilization 24 hrs
General Notes: Primary user: Kapheim

Special Requirements

Lighting Controls: See Proj. Standards, Ch. 3
Acoustic Req: See acoustics narrative, Ch. 4
Structural Req: None
Security: Locked
Other Spec Req:

Room Size and Capacity

Proposed Area: Included in 5.1 lab suites
Total Area: 125 SF
Room Quantity: 1
Assigned Cap: 0
Unassigned Cap: 3
Total Cap: 3

Finishes, Doors and Windows

Floor: Resilient Tile
Base: Resilient, Cove
Walls: Gyp. Bd.
Wall Finish: Paint
Ceiling: ACT (2'x2')
Ceiling Height:

Door Size: 3'-6" single leaf
Door Type: Wood
Door Vis Panel: Yes
Window Treat: Blackout
Window Skylight: None

Casework and Built-ins

Wall Cabinets: None
Base Cabinets: None
Counter Tops: None
Counter (LF): See diagram
Counter Height: None

Shelving (LF): None
Drawer Units: None
White Boards: No
Tack Boards None
Proj. Screen: None

Communications

See Project Design Standards in Chapter 3 and electrical/telecomm narrative in Chapter 4

HVAC

Air Changes: Research Lab Standard
Air Circulation: Research Lab Standard
Pressure: Negative to corridor
Temperature: Research Lab Standard
Rel. Humidity: Research Lab Standard
Local Exhaust: As noted
Air Filtration: Research Lab Standard
CO2 Sensor: Research Lab Standard
Distribution: Research Lab Standard
Other HVAC:

Electrical

See Project Design Standards in Chapter 3 and electrical/telecomm narrative in Chapter 4

Plumbing

Sinks: Epoxy resin, grey
Pure Water: Only as indicated
Hot/Cold Water: Yes
Hose Bibb: None
Floor Drain: None
Waste: Lab Waste
Emer. Eyewash: None
Emer. Station: None
Gases:
- Comp. Air: None
- Lab Gas: None
- Vacuum: None
- CO^2: None
- Other Gas:

Fire Protection: Wet Sprinkler

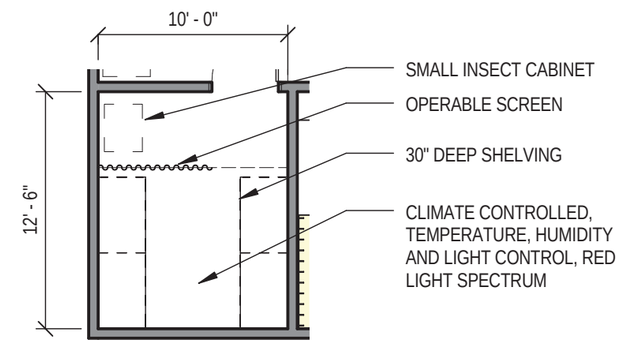

Equipment

Type	Count	Status
Blackout Curtain	1	1
Small Insect Cabinet	1	4

Furniture

Type	Count	Status
30"D Wire Shelving	4	3

Status Key: **1** = Furnished and Installed by Contractor (CFCI), **2** = Furnished by Owner, Contractor Installed (OFCI), **3** = Furnished and Installed by Owner (OFOI), **4** = Provided Outside of Project Budget

Scale: 1/8" = 1'-0"

CRSA PAYETTE

BLANK PAGE

5.1.8A Open Lab Bench Area

Room Data Sheet Detail

Department: Biology
Issue Date: WORK IN PROGRESS
Room No:

Space Information

Room Function: Shared open research lab
Adjacencies: Refer to 5.1
Access: Faculty, Students
Room Utilization 24 hrs
General Notes: Based on interviews with Nischwitz

Special Requirements

Lighting Controls: See Proj. Standards, Ch. 3
Acoustic Req: See acoustics narrative, Ch. 4
Structural Req: None
Security: Locked
Other Spec Req:

Room Size and Capacity

Proposed Area: Included in 5.1 lab suites
Total Area: 1081 SF
Room Quantity: 1
Assigned Cap: 2
Unassigned Cap: 4
Total Cap: 6

Finishes, Doors and Windows

Floor: Resilient Tile
Base: Resilient, Cove
Walls: Gyp. Bd.
Wall Finish: Paint
Ceiling: ACT (2'x2') clouds
Ceiling Height: 10'-0" min.

Door Size: 3'-6" single leaf
Door Type: Wood
Door Vis Panel: Yes
Window Treat: Light-filtering
Window Skylight: None

Casework and Built-ins

Wall Cabinets: Wood
Base Cabinets: Wood
Counter Tops: Epoxy Resin
Counter (LF): See diagram
Counter Height: 36" UON

Shelving (LF): Yes
Drawer Units: Yes
White Boards: Yes, as noted
Tack Boards None
Proj. Screen: None

Communications

See Project Design Standards in Chapter 3 and electrical/telecomm narrative in Chapter 4

HVAC

Air Changes: Research Lab Standard
Air Circulation: Research Lab Standard
Pressure: Negative to corridor
Temperature: Research Lab Standard
Rel. Humidity: Research Lab Standard
Local Exhaust: As noted
Air Filtration: Research Lab Standard
CO2 Sensor: Research Lab Standard
Distribution: Research Lab Standard
Other HVAC:

Electrical

See Project Design Standards in Chapter 3 and electrical/telecomm narrative in Chapter 4

Plumbing

Sinks: Epoxy resin, grey
Pure Water: Only as indicated
Hot/Cold Water: Yes
Hose Bibb:
Floor Drain: None
Waste: Lab Waste
Emer. Eyewash: Yes
Emer. Station: Yes
Gases:
- Comp. Air: Yes, as noted
- Lab Gas: None
- Vacuum: Yes, as noted
- CO^2: None
- Other Gas:

Fire Protection: Wet Sprinkler

Equipment

Type	Count	Status
4x1 Gas Cylinder Rack	1	1
32"x32" Refrigerator	7	4
Generic Equipment	10	4
Generic Gas Tank	4	4

Furniture

Type	Count	Status
Lab Stool	12	3

See Appendix Section 6.2, for individual researchers' equipment sheets (Status 4) for Lab Suite 5.1.8

Status Key: **1** = Furnished and Installed by Contractor (CFCI), **2** = Furnished by Owner, Contractor Installed (OFCI), **3** = Furnished and Installed by Owner (OFOI), **4** = Provided Outside of Project Budget

CRSA PAYETTE

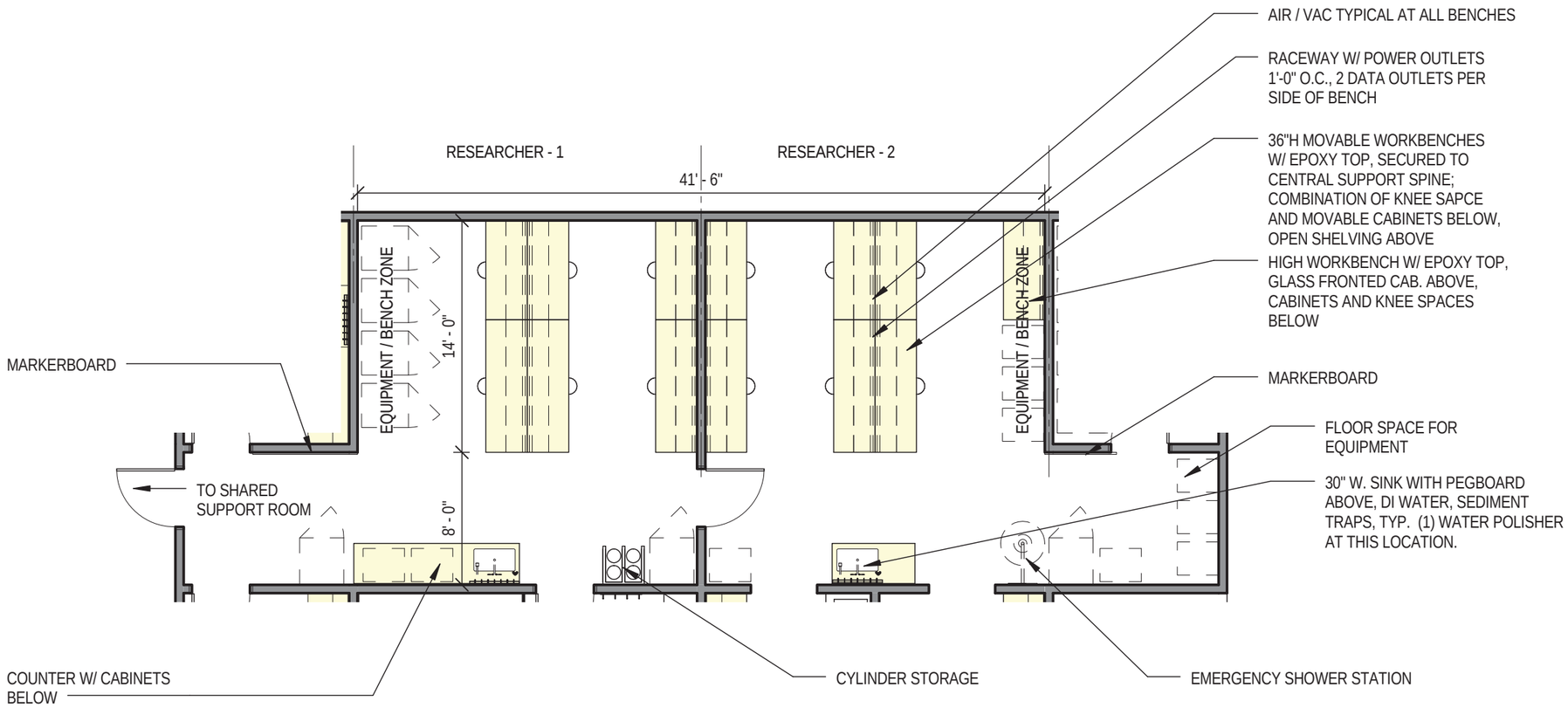

NOTE: PROVISION FOR (4) 240V OUTLETS IN EACH LAB SUITE. EXACT LOCATIONS TO BE DETERMINED.

Scale: 1/8" = 1'-0"

CRSA PAYETTE

5.1.8B Equipment Alcove

Room Data Sheet Detail

Department: Biology
Issue Date: WORK IN PROGRESS
Room No:

Space Information

Room Function: Research support
Adjacencies: Refer to 5.1
Access: Faculty, Students
Room Utilization 24 hrs
General Notes: Primary user: Nischwitz

Special Requirements

Lighting Controls: See Proj. Standards, Ch. 3
Acoustic Req: See acoustics narrative, Ch. 4
Structural Req: None
Security: Locked
Other Spec Req:

Room Size and Capacity

Proposed Area: Included in 5.1 lab suites
Total Area: 135 SF
Room Quantity: 1
Assigned Cap: 0
Unassigned Cap: 3
Total Cap: 3

Finishes, Doors and Windows

Floor: Resilient Tile
Base: Resilient, Cove
Walls: Gyp. Bd.
Wall Finish: Paint
Ceiling: ACT (2'x2')
Ceiling Height:

Door Size: 3'-6" single leaf
Door Type: Wood
Door Vis Panel: Yes
Window Treat: Light-filtering
Window Skylight: None

Casework and Built-ins

Wall Cabinets: Wood
Base Cabinets: Wood
Counter Tops: Epoxy Resin
Counter (LF): See diagram
Counter Height: 36" UON

Shelving (LF): No
Drawer Units: None
White Boards: No
Tack Boards None
Proj. Screen: None

Communications

See Project Design Standards in Chapter 3 and electrical/telecomm narrative in Chapter 4

HVAC

Air Changes: Research Lab Standard
Air Circulation: Research Lab Standard
Pressure: Negative to corridor
Temperature: Research Lab Standard
Rel. Humidity: Research Lab Standard
Local Exhaust: As noted
Air Filtration: Research Lab Standard
CO2 Sensor: Research Lab Standard
Distribution: Research Lab Standard
Other HVAC:

Electrical

See Project Design Standards in Chapter 3 and electrical/telecomm narrative in Chapter 4

Plumbing

Sinks: None
Pure Water: None
Hot/Cold Water: None
Hose Bibb:
Floor Drain: None
Waste: None
Emer. Eyewash: None
Emer. Station: None
Gases:
Comp. Air: None
Lab Gas: None
Vacuum: None
CO^2: None
Other Gas:
Fire Protection: Wet Sprinkler

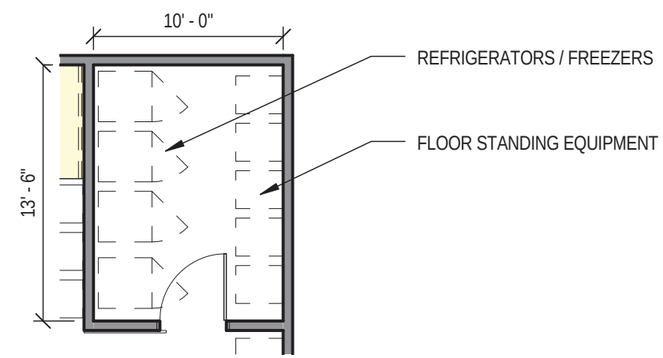

Equipment

Type	Count	Status
32"x32" Refrigerator	2	4
Freezer	2	4
Generic Equipment	5	

Furniture

Type	Count	Status

Status Key: **1** = Furnished and Installed by Contractor (CFCI), **2** = Furnished by Owner, Contractor Installed (OFCI), **3** = Furnished and Installed by Owner (OFOI), **4** = Provided Outside of Project Budget

Scale: 1/8" = 1'-0"

CRSA PAYETTE

5.1.8C Sterile Work Room

Room Data Sheet Detail

Department: Biology
Issue Date: WORK IN PROGRESS
Room No:

Space Information

Room Function: Research support
Adjacencies: Refer to 5.1
Access: Faculty, Students
Room Utilization 24 hrs
General Notes: Primary user: Nischwitz

Special Requirements

Lighting Controls: See Proj. Standards, Ch. 3
Acoustic Req: See acoustics narrative, Ch. 4
Structural Req: None
Security: Locked
Other Spec Req:

Room Size and Capacity

Proposed Area: Included in 5.1 lab suites
Total Area: 127 SF
Room Quantity: 1
Assigned Cap: 0
Unassigned Cap: 3
Total Cap: 3

Finishes, Doors and Windows

Floor: Resilient Tile
Base: Resilient, Cove
Walls: Gyp. Bd.
Wall Finish: Paint
Ceiling: ACT (2'x2')
Ceiling Height:

Door Size: 3'-6" single leaf
Door Type: Wood
Door Vis Panel: Yes
Window Treat: Light-filtering
Window Skylight: None

Casework and Built-ins

Wall Cabinets: Wood
Base Cabinets: Wood
Counter Tops: Epoxy Resin
Counter (LF): See diagram
Counter Height: 36" UON

Shelving (LF): Yes
Drawer Units: Yes
White Boards: No
Tack Boards None
Proj. Screen: None

Communications

See Project Design Standards in Chapter 3 and electrical/telecomm narrative in Chapter 4

HVAC

Air Changes: Research Lab Standard
Air Circulation: Research Lab Standard
Pressure: Negative to corridor
Temperature: Research Lab Standard
Rel. Humidity: Research Lab Standard
Local Exhaust: As noted
Air Filtration: Research Lab Standard
CO2 Sensor: Research Lab Standard
Distribution: Research Lab Standard
Other HVAC:

Electrical

See Project Design Standards in Chapter 3 and electrical/telecomm narrative in Chapter 4

Plumbing

Sinks: None
Pure Water: None
Hot/Cold Water: None
Hose Bibb:
Floor Drain: None
Waste: Lab Waste
Emer. Eyewash: None
Emer. Station: None
Gases:
Comp. Air: None
Lab Gas: None
Vacuum: None
CO^2: None
Other Gas:
Fire Protection: Wet Sprinkler

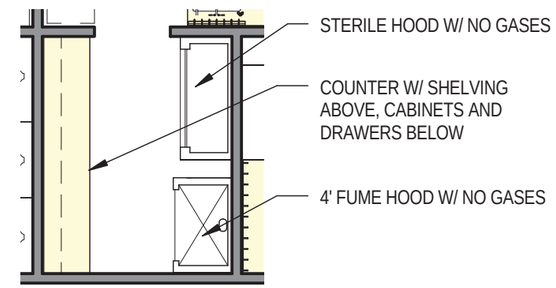

Equipment

Type	Count	Status
5' Fume Hood	1	1
6' Laminar Flow Hood	1	2

Furniture

Type	Count	Status

Status Key: **1** = Furnished and Installed by Contractor (CFCI), **2** = Furnished by Owner, Contractor Installed (OFCI), **3** = Furnished and Installed by Owner (OFOI), **4** = Provided Outside of Project Budget

Scale: 1/8" = 1'-0"

CRSA PAYETTE

5.2.1 Lab Entry/Support

Room Data Sheet Detail

Department: Biology
Issue Date: WORK IN PROGRESS
Room No:

Space Information

Room Function: Research support
Adjacencies: Refer to 5.1
Access: Faculty, Students
Room Utilization 24 hrs
General Notes:

Special Requirements

Lighting Controls: See Proj. Standards, Ch. 3
Acoustic Req: See acoustics narrative, Ch. 4
Structural Req: None
Security: Locked
Other Spec Req:

Room Size and Capacity

Proposed Area: Included in 5.1 lab suites
Total Area: 125 SF
Room Quantity: 14
Assigned Cap: 0
Unassigned Cap: 3
Total Cap: 3

Finishes, Doors and Windows

Floor: Resilient Tile
Base: Resilient, Cove
Walls: Gyp. Bd.
Wall Finish: Paint
Ceiling: ACT (2'x2')
Ceiling Height:

Door Size: 3'-6" single leaf
Door Type: Wood
Door Vis Panel: Yes
Window Treat: Light-filtering
Window Skylight: None

Casework and Built-ins

Wall Cabinets: Wood
Base Cabinets: Wood
Counter Tops: Epoxy Resin
Counter (LF): See diagram
Counter Height: 36" UON

Shelving (LF): Yes
Drawer Units: Yes
White Boards: None
Tack Boards None
Proj. Screen: None

Communications

See Project Design Standards in Chapter 3 and electrical/telecomm narrative in Chapter 4

HVAC

Air Changes: Research Lab Standard
Air Circulation: Research Lab Standard
Pressure: Negative to corridor
Temperature: Research Lab Standard
Rel. Humidity: Research Lab Standard
Local Exhaust: As noted
Air Filtration: Research Lab Standard
CO2 Sensor: Research Lab Standard
Distribution: Research Lab Standard
Other HVAC:

Electrical

See Project Design Standards in Chapter 3 and electrical/telecomm narrative in Chapter 4

Plumbing

Sinks: None
Pure Water: None
Hot/Cold Water: None
Hose Bibb: None
Floor Drain: None
Waste: None
Emer. Eyewash: None
Emer. Station: None
Gases:
- *Comp. Air:* None
- *Lab Gas:* None
- *Vacuum:* None
- *CO^2:* None
- *Other Gas:*

Fire Protection: Wet Sprinkler

Equipment

Type	Count	Status

Furniture

Type	Count	Status

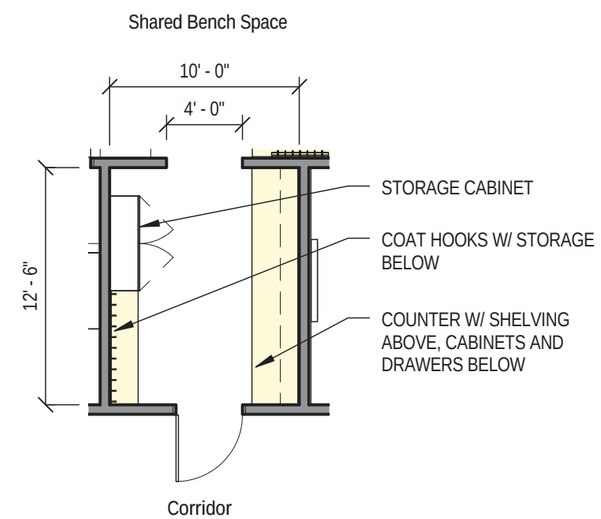

Status Key: **1** = Furnished and Installed by Contractor (CFCI), **2** = Furnished by Owner, Contractor Installed (OFCI), **3** = Furnished and Installed by Owner (OFOI), **4** = Provided Outside of Project Budget

Scale: 1/8" = 1'-0"

CRSA PAYETTE

5.2.2 Fume Hood Alcove

Room Data Sheet Detail

Department: Biology
Issue Date: WORK IN PROGRESS
Room No:

Space Information

Room Function: Research support
Adjacencies: Refer to 5.1
Access:
Room Utilization 24 hrs
General Notes:

Special Requirements

Lighting Controls: See Project Standards, Ch. 3
Acoustic Req: See acoustics narrative, Ch. 4
Structural Req: None
Security: Locked
Other Spec Req:

Room Size and Capacity

Proposed Area: Included in 5.1 lab suites
Total Area: 126 SF
Room Quantity: 8
Assigned Cap: 0
Unassigned Cap: 3
Total Cap: 3

Finishes, Doors and Windows

Floor: Resilient Tile
Base: Resilient, Cove
Walls: Gyp. Bd.
Wall Finish: Paint
Ceiling: ACT (2'x2')
Ceiling Height:

Door Size: 3'-6" single leaf
Door Type: Wood
Door Vis Panel: Yes
Window Treat: Light-filtering
Window Skylight: None

Casework and Built-ins

Wall Cabinets: Wood
Base Cabinets: Wood
Counter Tops: Epoxy Resin
Counter (LF): See diagram
Counter Height: 36" UON

Shelving (LF): Yes
Drawer Units: Yes
White Boards: None
Tack Boards None
Proj. Screen: None

Communications

See Project Design Standards in Chapter 3 and electrical/telecomm narrative in Chapter 4

HVAC

Air Changes: Research Lab Standard
Air Circulation: Research Lab Standard
Pressure: Negative to corridor
Temperature: Research Lab Standard
Rel. Humidity: Research Lab Standard
Local Exhaust: As noted
Air Filtration: Research Lab Standard
CO2 Sensor: Research Lab Standard
Distribution: Research Lab Standard
Other HVAC:

Electrical

See Project Design Standards in Chapter 3 and electrical/telecomm narrative in Chapter 4

Plumbing

Sinks: Epoxy resin, grey
Pure Water: Only as indicated
Hot/Cold Water: Yes
Hose Bibb: None
Floor Drain: None
Waste: Lab Waste
Emer. Eyewash: None
Emer. Station: None
Gases:
- *Comp. Air:* Yes, as noted
- *Lab Gas:* Yes, as noted
- *Vacuum:* Yes, as noted
- *CO^2:* None
- *Other Gas:*

Fire Protection: Wet Sprinkler

Equipment

Type	Count	Status
4' Fume Hood	1	1

Furniture

Type	Count	Status

TYPICAL FUME HOOD ALCOVE

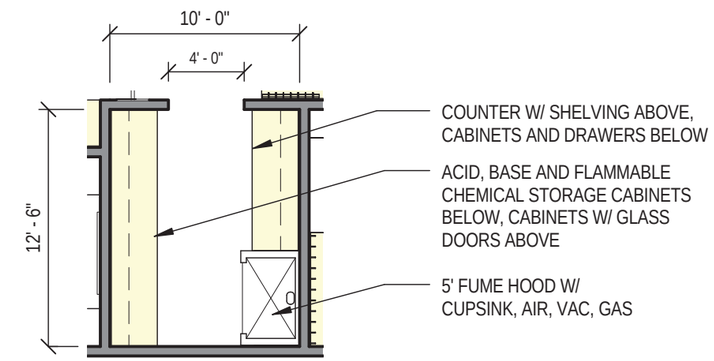

5.1.2 CUSTOM FUME HOOD ALCOVE

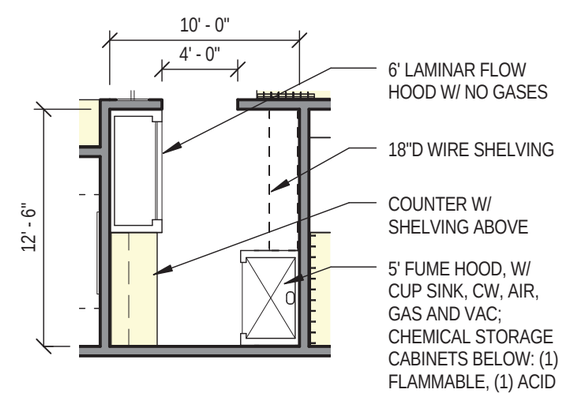

Type	Count	Status
5' Fume Hood	1	1
6' Laminar Flow Hood	1	2

5.1.4 CUSTOM FUME HOOD ALCOVE

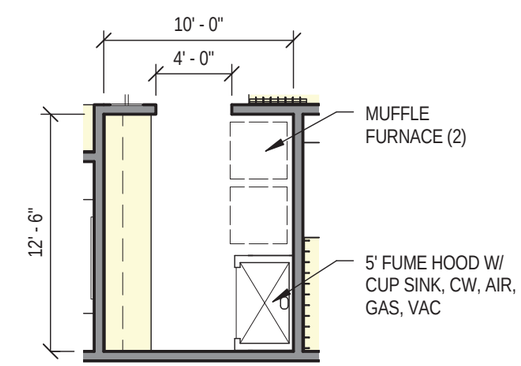

Type	Count	Status
5' Fume Hood	1	1
Muffle Furnace	2	4

Status Key: **1** = Furnished and Installed by Contractor (CFCI), **2** = Furnished by Owner, Contractor Installed (OFCI), **3** = Furnished and Installed by Owner (OFOI), **4** = Provided Outside of Project Budget

Scale: 1/8" = 1'-0"

CRSA PAYETTE

5.2.3 Work Room

Room Data Sheet Detail

Department: Biology
Issue Date: WORK IN PROGRESS
Room No:

Space Information

Room Function: Research support
Adjacencies: Refer to 5.1
Access: Faculty, Students
Room Utilization 24 hrs
General Notes:

Special Requirements

Lighting Controls: See Proj. Standards, Ch. 3
Acoustic Req: See acoustics narrative, Ch. 4
Structural Req: None
Security: Locked
Other Spec Req:

Room Size and Capacity

Proposed Area: Included in 5.1 lab suites
Total Area: 135 SF
Room Quantity: 11
Assigned Cap: 0
Unassigned Cap: 3
Total Cap: 3

Finishes, Doors and Windows

Floor: Resilient Tile
Base: Resilient, Cove
Walls: Gyp. Bd.
Wall Finish: Paint
Ceiling: ACT (2'x2')
Ceiling Height:

Door Size: 3'-6" single leaf
Door Type: Wood
Door Vis Panel: Yes
Window Treat: Light-filtering
Window Skylight: None

Casework and Built-ins

Wall Cabinets: Wood
Base Cabinets: Wood
Counter Tops: Epoxy Resin
Counter (LF): See diagram
Counter Height: 36" UON

Shelving (LF): Yes
Drawer Units: Yes
White Boards: None
Tack Boards None
Proj. Screen: None

Communications

See Project Design Standards in Chapter 3 and electrical/telecomm narrative in Chapter 4

HVAC

Air Changes: Research Lab Standard
Air Circulation: Research Lab Standard
Pressure: Negative to corridor
Temperature: Research Lab Standard
Rel. Humidity: Research Lab Standard
Local Exhaust: As noted
Air Filtration: Research Lab Standard
CO2 Sensor: Research Lab Standard
Distribution: Research Lab Standard
Other HVAC:

Electrical

See Project Design Standards in Chapter 3 and electrical/telecomm narrative in Chapter 4

Plumbing

Sinks: Epoxy resin, grey
Pure Water: Only as indicated
Hot/Cold Water: Yes
Hose Bibb: None
Floor Drain: None
Waste: Lab Waste
Emer. Eyewash: None
Emer. Station: None
Gases:
- Comp. Air: None
- Lab Gas: None
- Vacuum: None
- CO^2: None
- Other Gas:

Fire Protection: Wet Sprinkler

Equipment

Type	Count	Status

Furniture

Type	Count	Status

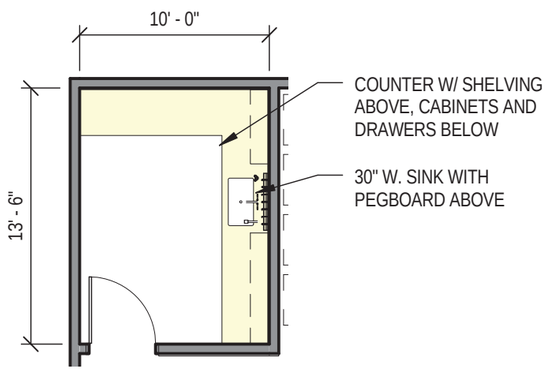

Status Key: **1** = Furnished and Installed by Contractor (CFCI), **2** = Furnished by Owner, Contractor Installed (OFCI), **3** = Furnished and Installed by Owner (OFOI), **4** = Provided Outside of Project Budget

Scale: 1/8" = 1'-0"

CRSA PAYETTE

5.2.4 Small Meeting Room

Room Data Sheet Detail

Department: Biology
Issue Date: WORK IN PROGRESS
Room No:

Space Information

Room Function: Research support
Adjacencies: Refer to 5.1
Access: Faculty, Students
Room Utilization 24 hrs
General Notes:

Special Requirements

Lighting Controls: See Proj. Standards, Ch. 3
Acoustic Req: See acoustics narrative, Ch. 4
Structural Req: None
Security: Locked
Other Spec Req:

Room Size and Capacity

Proposed Area: Included in 5.1 lab suites
Total Area: 125 SF
Room Quantity: 8
Assigned Cap: 0
Unassigned Cap: 4
Total Cap: 4

Finishes, Doors and Windows

Floor: Resilient Tile
Base: Resilient, Cove
Walls: Gyp. Bd.
Wall Finish: Paint
Ceiling: ACT (2'x2')
Ceiling Height:

Door Size: 3'-0" single leaf
Door Type: Wood
Door Vis Panel: Yes
Window Treat: Light-filtering
Window Skylight: None

Casework and Built-ins

Wall Cabinets: None
Base Cabinets: None
Counter Tops: None
Counter (LF): See diagram
Counter Height: 36" UON

Shelving (LF): None
Drawer Units: None
White Boards: Yes, as noted
Tack Boards None
Proj. Screen: Yes, as noted

Communications

See Project Design Standards in Chapter 3 and electrical/telecomm narrative in Chapter 4

HVAC

Air Changes: Office Standard
Air Circulation: Air may be returned
Pressure: Neutral
Temperature: Office Standard
Rel. Humidity: Office Standard
Local Exhaust: None
Air Filtration: MERV 8/MERV 13
CO2 Sensor: None
Distribution: Individual TStat and VAV Box
Other HVAC:

Electrical

See Project Design Standards in Chapter 3 and electrical/telecomm narrative in Chapter 4

Plumbing

Sinks: None
Pure Water: None
Hot/Cold Water: None
Hose Bibb: None
Floor Drain: None
Waste: None
Emer. Eyewash: None
Emer. Station: None
Gases:
- Comp. Air: None
- Lab Gas: None
- Vacuum: None
- CO^2: None
- Other Gas:

Fire Protection: Wet Sprinkler

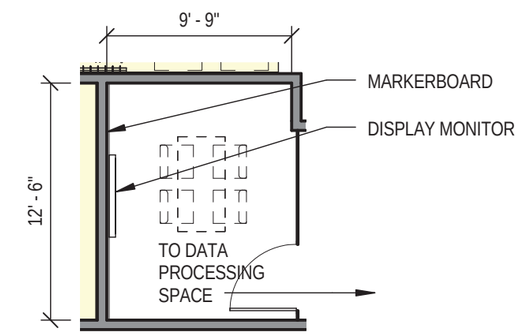

Equipment

Type	Count	Status

Furniture

Type	Count	Status
30"x60" Table	9	3
Task Chair	36	3

Status Key: **1** = Furnished and Installed by Contractor (CFCI), **2** = Furnished by Owner, Contractor Installed (OFCI), **3** = Furnished and Installed by Owner (OFOI), **4** = Provided Outside of Project Budget

Scale: 1/8" = 1'-0"

CRSA PAYETTE

5.3.1 Controlled Temperature (Cold) Room

Room Data Sheet Detail

Department: Biology
Issue Date: WORK IN PROGRESS
Room No:

Space Information

Room Function: *Research support*
Adjacencies: *See Adjacency Diagrams*
Access: *Faculty*
Room Utilization *24 hrs*
General Notes:

Special Requirements

Lighting Controls: *See Proj. Standards, Ch. 3*
Acoustic Req: *See acoustics narrative, Ch. 4*
Structural Req: *None*
Security: *Locked*
Other Spec Req:

Room Size and Capacity

Proposed Area: *100 SF*
Total Area: *100 SF*
Room Quantity: *4*
Assigned Cap: *0*
Unassigned Cap: *2*
Total Cap: *2*

Finishes, Doors and Windows

Floor: *Resilient Tile*
Base: *Resilient, Cove*
Walls: *Gyp. Bd.*
Wall Finish: *Paint*
Ceiling: *ACT (2'x2')*
Ceiling Height:

Door Size: *3'-6" single leaf*
Door Type: *Wood*
Door Vis Panel: *None*
Window Treat: *None*
Window Skylight: *None*

Casework and Built-ins

Wall Cabinets: *Stainless Steel*
Base Cabinets: *Stainless Steel*
Counter Tops: *Stainless Steel*
Counter (LF): *See diagram*
Counter Height: *36" UON*

Shelving (LF): *Yes*
Drawer Units: *Yes*
White Boards: *None*
Tack Boards *None*
Proj. Screen: *None*

Communications

See Project Design Standards in Chapter 3 and electrical/telecomm narrative in Chapter 4

HVAC

Air Changes:
Air Circulation:
Pressure: *Negative to corridor*
Temperature: *TBD*
Rel. Humidity:
Local Exhaust: *As noted*
Air Filtration:
CO2 Sensor:
Distribution:
Other HVAC:

Electrical

See Project Design Standards in Chapter 3 and electrical/telecomm narrative in Chapter 4

Plumbing

Sinks: *Stainless Steel*
Pure Water: *Only as indicated*
Hot/Cold Water: *Yes*
Hose Bibb: *None*
Floor Drain: *None*
Waste: *Lab Waste*
Emer. Eyewash: *None*
Emer. Station: *None*
Gases:
Comp. Air: *None*
Lab Gas: *None*
Vacuum: *None*
CO^2: *None*
Other Gas:
Fire Protection: *Wet Sprinkler*

Equipment

Type	Count	Status

Furniture

Type	Count	Status

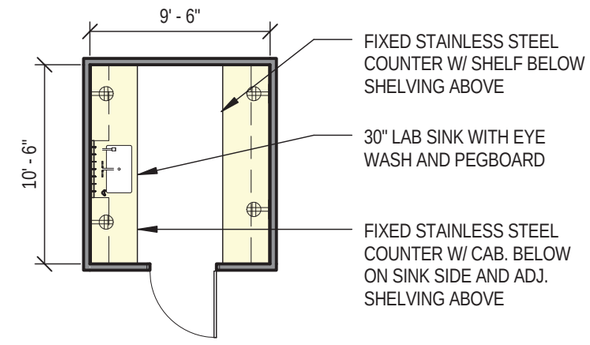

LAYOUT A - WORKING ROOM

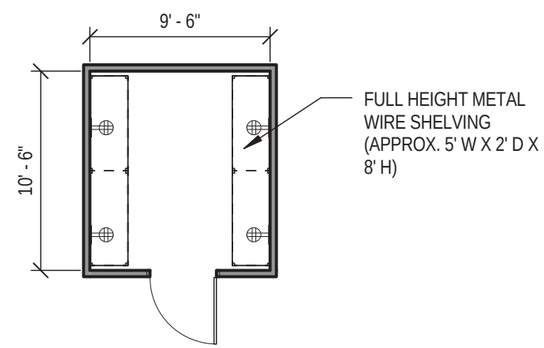

LAYOUT B - STORAGE ROOM

Status Key: **1** = Furnished and Installed by Contractor (CFCI), **2** = Furnished by Owner, Contractor Installed (OFCI), **3** = Furnished and Installed by Owner (OFOI), **4** = Provided Outside of Project Budget

Scale: 1/8" = 1'-0"

CRSA PAYETTE

5.3.2 Growth Chamber Room

Room Data Sheet Detail

Department: Biology
Issue Date: WORK IN PROGRESS
Room No:

Space Information

Room Function: Research support
Adjacencies: See Adjacency Diagrams
Access: Faculty
Room Utilization 24 hrs
General Notes:

Special Requirements

Lighting Controls: See Proj. Standards, Ch. 3
Acoustic Req: See acoustics narrative, Ch. 4
Structural Req: None
Security: Locked
Other Spec Req:

Room Size and Capacity

Proposed Area: 180 SF
Total Area: 180 SF
Room Quantity: 4
Assigned Cap: 0
Unassigned Cap: 1
Total Cap: 1

Finishes, Doors and Windows

Floor: Resilient Tile
Base: Resilient, Cove
Walls: Gyp. Bd.
Wall Finish: Paint
Ceiling: ACT (2'x2')
Ceiling Height:

Door Size: 3'-6" single leaf
Door Type: Wood
Door Vis Panel: None
Window Treat: None
Window Skylight: None

Casework and Built-ins

Wall Cabinets: Wood
Base Cabinets: Wood
Counter Tops: Epoxy Resin
Counter (LF): See diagram
Counter Height: 36" UON

Shelving (LF): Yes
Drawer Units: Yes
White Boards: None
Tack Boards None
Proj. Screen: None

Communications

See Project Design Standards in Chapter 3 and electrical/telecomm narrative in Chapter 4

HVAC

Air Changes: Research Lab Standard
Air Circulation: Research Lab Standard
Pressure: Negative to corridor
Temperature: Research Lab Standard
Rel. Humidity: Research Lab Standard
Local Exhaust: As noted
Air Filtration: Research Lab Standard
CO2 Sensor: Research Lab Standard
Distribution: Research Lab Standard
Other HVAC:

Electrical

See Project Design Standards in Chapter 3 and electrical/telecomm narrative in Chapter 4

Plumbing

Sinks: Epoxy resin, grey
Pure Water: Only as indicated
Hot/Cold Water: Yes
Hose Bibb: None
Floor Drain: As noted
Waste: Lab Waste
Emer. Eyewash: None
Emer. Station: None
Gases:
Comp. Air: None
Lab Gas: None
Vacuum: None
CO^2: None
Other Gas:
Fire Protection: Wet Sprinkler

Equipment

Type	Count	Status
Growth Chamber	3	4

Furniture

Type	Count	Status

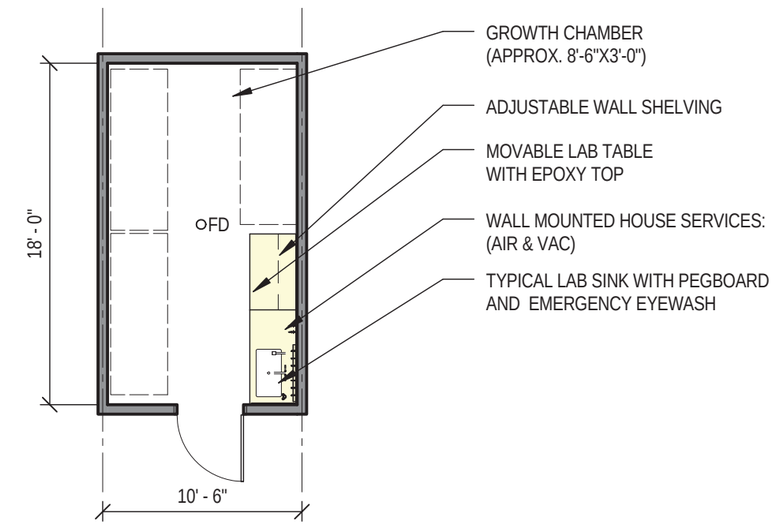

FD = FLOOR DRAIN

Status Key: **1** = Furnished and Installed by Contractor (CFCI), **2** = Furnished by Owner, Contractor Installed (OFCI), **3** = Furnished and Installed by Owner (OFOI), **4** = Provided Outside of Project Budget

Scale: 1/8" = 1'-0"

CRSA PAYETTE

5.3.3 Freezer Farm - Large

Room Data Sheet Detail

Department: Biology
Issue Date: WORK IN PROGRESS
Room No:

Space Information

Room Function: Research support
Adjacencies: See Adjacency Diagrams
Access: Faculty
Room Utilization 24 hrs
General Notes:

Special Requirements

See Project Standards, Ch.
Lighting Controls: 3
Acoustic Req: See acoustics narrative, Ch. 4
Structural Req: None
Security: Locked
Other Spec Req:

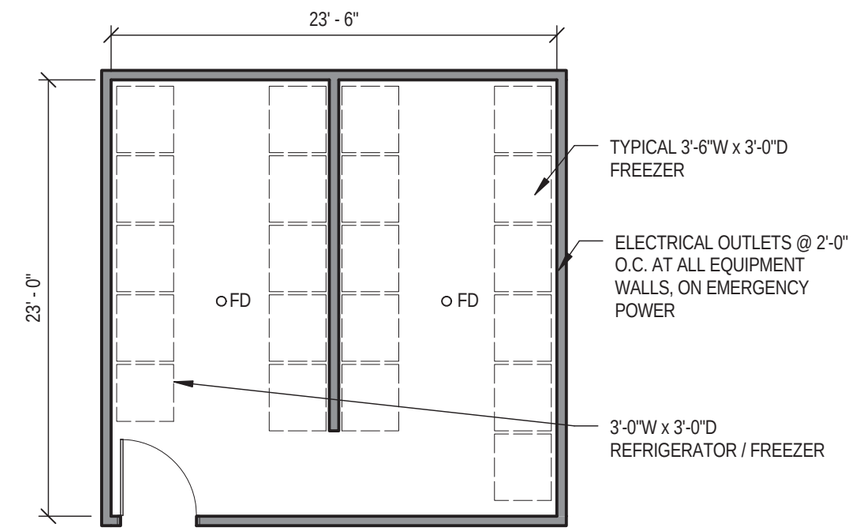

Room Size and Capacity

Proposed Area: 540 SF
Total Area: 531 SF
Room Quantity: 1
Assigned Cap: 0
Unassigned Cap: 1
Total Cap: 1

Finishes, Doors and Windows

Floor: Sealed Concrete
Base: Resilient, Cove
Walls: Gyp. Bd.
Wall Finish: Paint
Ceiling: ACT (2'x2')
Ceiling Height:

Door Size: 4'-0" single leaf
Door Type: Wood
Door Vis Panel: Yes
Window Treat: None
Window Skylight: None

Casework and Built-ins

Wall Cabinets: None
Base Cabinets: None
Counter Tops: None
Counter (LF): See diagram
Counter Height: None

Shelving (LF): None
Drawer Units: None
White Boards: None
Tack Boards None
Proj. Screen: None

Communications

See Project Design Standards in Chapter 3 and electrical/telecomm narrative in Chapter 4

HVAC

Air Changes: Research Lab Standard
Air Circulation: Research Lab Standard
Pressure: Negative to corridor
Temperature: Research Lab Standard
Rel. Humidity: Research Lab Standard
Local Exhaust: As noted
Air Filtration: Research Lab Standard
CO2 Sensor: Research Lab Standard
Distribution: Research Lab Standard
Other HVAC: As noted

Electrical

See Project Design Standards in Chapter 3 and electrical/telecomm narrative in Chapter 4

Plumbing

Sinks: None
Pure Water: N/A
Hot/Cold Water: N/A
Hose Bibb: None
Floor Drain: None
Waste: None
Emer. Eyewash: None
Emer. Station: None
Gases:
- *Comp. Air:* None
- *Lab Gas:* None
- *Vacuum:* None
- *CO^2:* None
- *Other Gas:*

Fire Protection: Wet Sprinkler

Equipment

Type	Count	Status
-80C Freezer	20	4
Refrigerator / Freezer	1	4

Furniture

Type	Count	Status

Status Key: **1** = Furnished and Installed by Contractor (CFCI), **2** = Furnished by Owner, Contractor Installed (OFCI), **3** = Furnished and Installed by Owner (OFOI), **4** = Provided Outside of Project Budget

Scale: 1/8" = 1'-0"

CRSA PAYETTE

5.3.4 Freezer Farm - Small

Room Data Sheet Detail

Department: Biology
Issue Date: WORK IN PROGRESS
Room No:

Space Information

Room Function: Research support
Adjacencies: See Adjacency Diagrams
Access: Faculty
Room Utilization 24 hrs
General Notes:

Special Requirements

Lighting Controls: See Proj. Standards, Ch. 3
Acoustic Req: See acoustics narrative, Ch. 4
Structural Req: None
Security: Locked
Other Spec Req:

Room Size and Capacity

Proposed Area: 270 SF
Total Area: 265 SF
Room Quantity: 1
Assigned Cap: 0
Unassigned Cap: 1
Total Cap: 1

Finishes, Doors and Windows

Floor: Sealed Concrete
Base: Resilient, Cove
Walls: Gyp. Bd.
Wall Finish: Paint
Ceiling: ACT (2'x2')
Ceiling Height:

Door Size: 4'-0" single leaf
Door Type: Wood
Door Vis Panel: None
Window Treat: Light-filtering
Window Skylight: None

Casework and Built-ins

Wall Cabinets: None
Base Cabinets: None
Counter Tops: None
Counter (LF): See diagram
Counter Height: None

Shelving (LF): None
Drawer Units: None
White Boards: None
Tack Boards None
Proj. Screen: None

Communications

See Project Design Standards in Chapter 3 and electrical/telecomm narrative in Chapter 4

HVAC

Air Changes: Research Lab Standard
Air Circulation: Research Lab Standard
Pressure: Negative to corridor
Temperature: Research Lab Standard
Rel. Humidity: Research Lab Standard
Local Exhaust: As noted
Air Filtration: Research Lab Standard
CO2 Sensor: Research Lab Standard
Distribution: Research Lab Standard
Other HVAC:

Electrical

See Project Design Standards in Chapter 3 and electrical/telecomm narrative in Chapter 4

Plumbing

Sinks: None
Pure Water: None
Hot/Cold Water: None
Hose Bibb: None
Floor Drain: As noted
Waste: None
Emer. Eyewash: None
Emer. Station: None
Gases:
Comp. Air: None
Lab Gas: None
Vacuum: None
CO^2: None
Other Gas:
Fire Protection: Wet Sprinkler

Equipment

Type	Count	Status
-80C Freezer	11	4

Furniture

Type	Count	Status

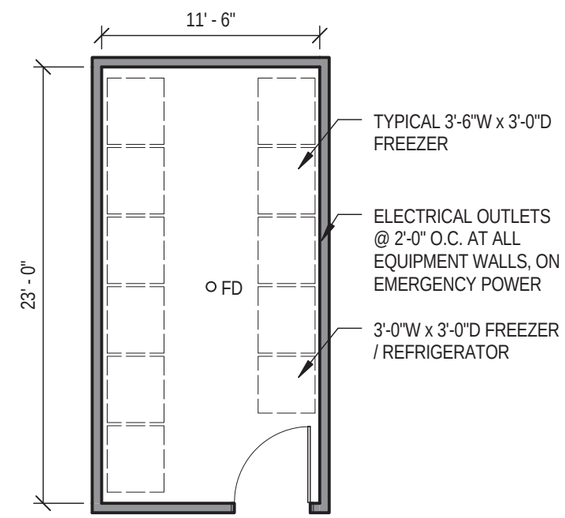

Scale: 1/8" = 1'-0"

Status Key: **1** = Furnished and Installed by Contractor (CFCI), **2** = Furnished by Owner, Contractor Installed (OFCI), **3** = Furnished and Installed by Owner (OFOI), **4** = Provided Outside of Project Budget

CRSA PAYETTE

5.3.5 Autoclave/Ice

Room Data Sheet Detail

Department: Biology
Issue Date: WORK IN PROGRESS
Room No:

Space Information

Room Function: Research support
Adjacencies: See Adjacency Diagrams
Access: Faculty, Staff
Room Utilization 24 hrs
General Notes:

Special Requirements

Lighting Controls: See Proj. Standards, Ch. 3
Acoustic Req: See acoustics narrative, Ch. 4
Structural Req: None
Security: Locked
Other Spec Req:

Room Size and Capacity

Proposed Area: 300 SF
Total Area: 295 SF
Room Quantity: 2
Assigned Cap: 0
Unassigned Cap: 1
Total Cap: 1

Finishes, Doors and Windows

Floor: Seamless resilient sheet
Base: Resilient, Cove
Walls: Gyp. Bd.
Wall Finish: Paint
Ceiling: ACT (2'x2')
Ceiling Height:

Door Size: 3'-6" single leaf
Door Type: Wood
Door Vis Panel: None
Window Treat: None
Window Skylight: None

Casework and Built-ins

Wall Cabinets: Stainless Steel
Base Cabinets: Stainless Steel
Counter Tops: Stainless Steel
Counter (LF): See diagram
Counter Height: 36" UON

Shelving (LF): None
Drawer Units: None
White Boards: None
Tack Boards None
Proj. Screen: None

Communications

See Project Design Standards in Chapter 3 and electrical/telecomm narrative in Chapter 4

HVAC

Air Changes: Research Lab Standard
Air Circulation: Research Lab Standard
Pressure: Negative to corridor
Temperature: Research Lab Standard
Rel. Humidity: Research Lab Standard
Local Exhaust: Capture Hood
Air Filtration: Research Lab Standard
CO2 Sensor: Research Lab Standard
Distribution: Research Lab Standard
Other HVAC:

Electrical

See Project Design Standards in Chapter 3 and electrical/telecomm narrative in Chapter 4

Plumbing

Sinks: None
Pure Water: None
Hot/Cold Water: None
Hose Bibb: None
Floor Drain: As noted
Waste: None
Emer. Eyewash: None
Emer. Station: None
Gases:
Comp. Air: None
Lab Gas: None
Vacuum: None
CO^2: None
Other Gas:
Fire Protection: Wet Sprinkler

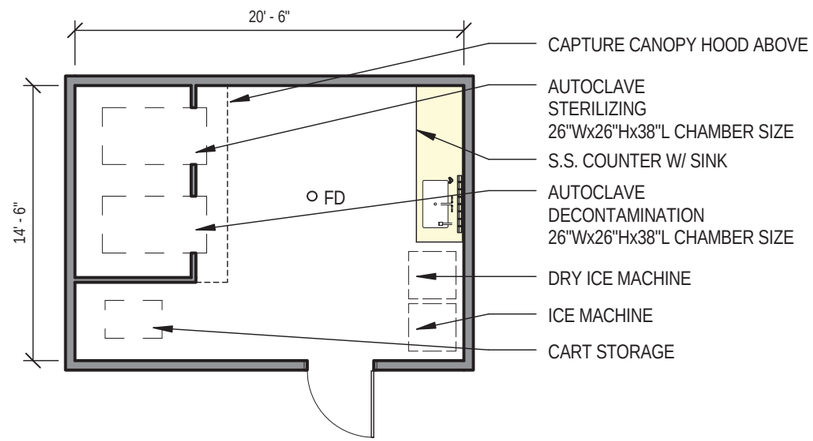

FD = FLOOR DRAIN

Equipment

Type	Count	Status
Autoclave Decontamination	1	1
Autoclave Sterilizing	1	1
Cart	1	3
Dry Ice Machine	1	2
Ice Machine	1	2

Furniture

Type	Count	Status

Status Key: **1** = Furnished and Installed by Contractor (CFCI), **2** = Furnished by Owner, Contractor Installed (OFCI), **3** = Furnished and Installed by Owner (OFOI), **4** = Provided Outside of Project Budget

Scale: 1/8" = 1'-0"

CRSA PAYETTE

5.3.6 Field Equipment / Storage (Research)

Room Data Sheet Detail

Department: Biology
Issue Date: WORK IN PROGRESS
Room No:

Space Information

Room Function: Research support
Adjacencies: See Adjacency Diagrams
Access: Faculty, Staff
Room Utilization 24 hrs
General Notes:

Locate room close to exterior door

Special Requirements

See Project Standards, Ch. 3
Lighting Controls:
Acoustic Req: See acoustics narrative, Ch. 4
Structural Req: None
Security: Locked
Other Spec Req:

Room Size and Capacity

Proposed Area: 300 SF
Total Area: 300 SF
Room Quantity: 1
Assigned Cap: 0
Unassigned Cap: 1
Total Cap: 1

Finishes, Doors and Windows

Floor: Sealed Concrete
Base: Resilient, Cove
Walls: Gyp. Bd.
Wall Finish: Paint
Ceiling: ACT (2'x2')
Ceiling Height:

Door Size: 3'-6" single leaf
Door Type: Wood
Door Vis Panel: Yes
Window Treat: Light-filtering
Window Skylight: None

Casework and Built-ins

Wall Cabinets: Wood
Base Cabinets: Wood
Counter Tops: Epoxy Resin
Counter (LF): See diagram
Counter Height: 36" UON

Shelving (LF): Yes
Drawer Units: Yes
White Boards: None
Tack Boards None
Proj. Screen: None

Communications

See Project Design Standards in Chapter 3 and electrical/telecomm narrative in Chapter 4

HVAC

Air Changes:
Air Circulation:
Pressure: Negative to corridor
Temperature:
Rel. Humidity:
Local Exhaust: As noted
Air Filtration:
CO2 Sensor:
Distribution:
Other HVAC:

Electrical

See Project Design Standards in Chapter 3 and electrical/telecomm narrative in Chapter 4

Plumbing

Sinks: Stainless Steel
Pure Water: Only as indicated
Hot/Cold Water: Yes
Hose Bibb: None
Floor Drain: None
Waste: General
Emer. Eyewash: None
Emer. Station: None
Gases:
Comp. Air: None
Lab Gas: None
Vacuum: None
CO^2: None
Other Gas:
Fire Protection: Wet Sprinkler

Equipment

Type	Count	Status

Furniture

Type	Count	Status
24"D Wire Shelving	3	3

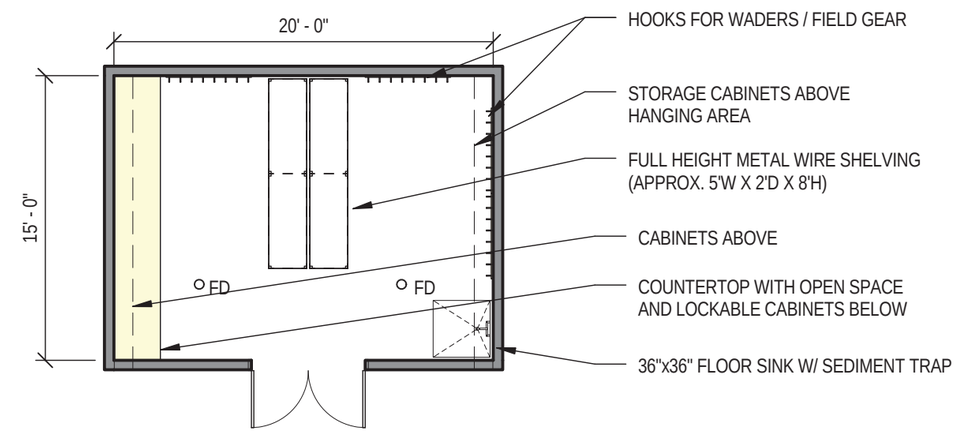

FD = FLOOR DRAIN

Status Key: **1** = Furnished and Installed by Contractor (CFCI), **2** = Furnished by Owner, Contractor Installed (OFCI), **3** = Furnished and Installed by Owner (OFOI), **4** = Provided Outside of Project Budget

Scale: 1/8" = 1'-0"

CRSA PAYETTE

5.3.7 Common Support Room - Large

Room Data Sheet Detail

Department: Biology
Issue Date: WORK IN PROGRESS
Room No:

Space Information

Room Function: Research support
Adjacencies: See Adjacency Diagrams
Access: Faculty
Room Utilization 24 hrs
General Notes:

Special Requirements

Lighting Controls: See Proj. Standards, Ch. 3
Acoustic Req: See acoustics narrative, Ch. 4
Structural Req: None
Security: Locked
Other Spec Req:

Room Size and Capacity

Proposed Area: 600 SF
Total Area: 582 SF
Room Quantity: 1
Assigned Cap: 0
Unassigned Cap: 5
Total Cap: 5

Finishes, Doors and Windows

Floor: Resilient Tile
Base: Resilient, Cove
Walls: Gyp. Bd.
Wall Finish: Paint
Ceiling: ACT (2'x2')
Ceiling Height:

Door Size: 3'-6" single leaf
Door Type: Wood
Door Vis Panel: Yes
Window Treat: Light-filtering
Window Skylight: None

Casework and Built-ins

Wall Cabinets: Wood
Base Cabinets: Wood
Counter Tops: Epoxy Resin
Counter (LF): See diagram
Counter Height: 36" UON

Shelving (LF): Yes
Drawer Units: Yes
White Boards: None
Tack Boards None
Proj. Screen: None

Communications

See Project Design Standards in Chapter 3 and electrical/telecomm narrative in Chapter 4

HVAC

Air Changes: Research Lab Standard
Air Circulation: Research Lab Standard
Pressure: Negative to corridor
Temperature: Research Lab Standard
Rel. Humidity: Research Lab Standard
Local Exhaust: As noted
Air Filtration: Research Lab Standard
CO2 Sensor: Research Lab Standard
Distribution: Research Lab Standard
Other HVAC:

Electrical

See Project Design Standards in Chapter 3 and electrical/telecomm narrative in Chapter 4

Plumbing

Sinks: Stainless Steel
Pure Water: Only as indicated
Hot/Cold Water: Yes
Hose Bibb: None
Floor Drain: None
Waste: Lab Waste
Emer. Eyewash: None
Emer. Station: None
Gases:
Comp. Air: Yes, as noted
Lab Gas: None
Vacuum: Yes, as noted
CO^2: None
Other Gas:
Fire Protection: Wet Sprinkler

Equipment

Type	Count	Status
Autoclave	1	1

Furniture

Type	Count	Status
Lab Stool	5	3

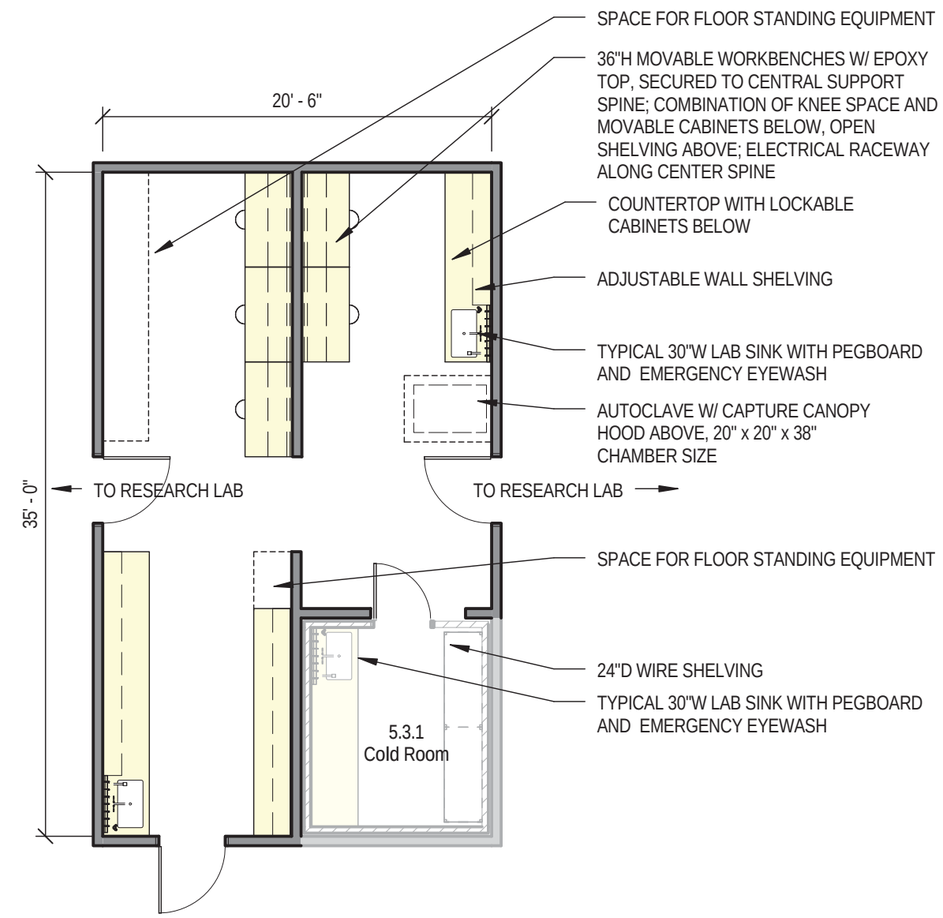

Status Key: **1** = Furnished and Installed by Contractor (CFCI), **2** = Furnished by Owner, Contractor Installed (OFCI), **3** = Furnished and Installed by Owner (OFOI), **4** = Provided Outside of Project Budget

Scale: 1/8" = 1'-0"

CRSA PAYETTE

5.3.8 Common Support Room - Small

Room Data Sheet Detail

Department: Biology
Issue Date: WORK IN PROGRESS
Room No:

Space Information

Room Function: Research support
Adjacencies: See Adjacency Diagrams
Access: Faculty
Room Utilization 24 hrs
General Notes:

Special Requirements

Lighting Controls: See Proj. Standards, Ch. 3
Acoustic Req: See acoustics narrative, Ch. 4
Structural Req: None
Security: Locked
Other Spec Req:

Room Size and Capacity

Proposed Area: 300 SF
Total Area: 300 SF
Room Quantity: 3
Assigned Cap: 0
Unassigned Cap: 3
Total Cap: 3

Finishes, Doors and Windows

Floor: Resilient Tile
Base: Resilient, Cove
Walls: Gyp. Bd.
Wall Finish: Paint
Ceiling: ACT (2'x2')
Ceiling Height:

Door Size: 3'-6" single leaf
Door Type: Wood
Door Vis Panel: Yes
Window Treat: Light-filtering
Window Skylight: None

Casework and Built-ins

Wall Cabinets: Wood
Base Cabinets: Wood
Counter Tops: Epoxy Resin
Counter (LF): See diagram
Counter Height: 36" UON

Shelving (LF): Yes
Drawer Units: Yes
White Boards: None
Tack Boards None
Proj. Screen: None

Communications

See Project Design Standards in Chapter 3 and electrical/telecomm narrative in Chapter 4

HVAC

Air Changes: Research Lab Standard
Air Circulation: Research Lab Standard
Pressure: Negative to corridor
Temperature: Research Lab Standard
Rel. Humidity: Research Lab Standard
Local Exhaust: As noted
Air Filtration: Research Lab Standard
CO2 Sensor: Research Lab Standard
Distribution: Research Lab Standard
Other HVAC:

Electrical

See Project Design Standards in Chapter 3 and electrical/telecomm narrative in Chapter 4

Plumbing

Sinks: Stainless Steel
Pure Water: Only as indicated
Hot/Cold Water: Yes
Hose Bibb: None
Floor Drain: None
Waste: Lab Waste
Emer. Eyewash: None
Emer. Station: None
Gases:
Comp. Air: Yes, as noted
Lab Gas: None
Vacuum: Yes, as noted
CO^2: None
Other Gas:
Fire Protection: Wet Sprinkler

Equipment

Type	Count	Status

Furniture

Type	Count	Status
Lab Stool	3	3

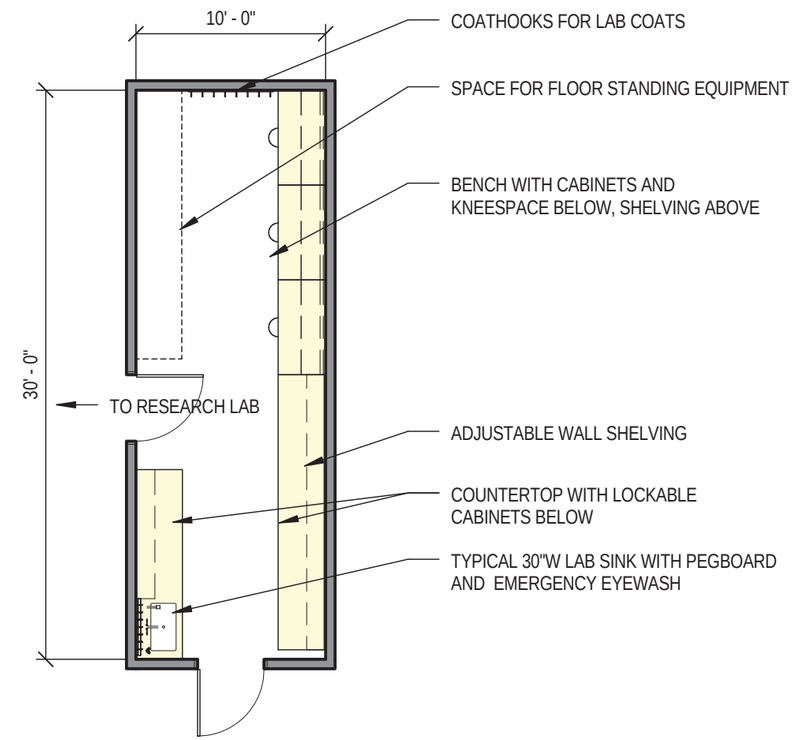

Status Key: **1** = Furnished and Installed by Contractor (CFCI), **2** = Furnished by Owner, Contractor Installed (OFCI), **3** = Furnished and Installed by Owner (OFOI), **4** = Provided Outside of Project Budget

Scale: 1/8" = 1'-0"

CRSA PAYETTE

5.3.9 BSL 2 Lab

Room Data Sheet Detail

Department: Biology
Issue Date: WORK IN PROGRESS
Room No:

Space Information

Room Function: *Research support*
Adjacencies: *See Adjacency Diagrams*
Access: *Faculty*
Room Utilization *24 hrs*
General Notes: Primary User - Bernhardt

Special Requirements

Lighting Controls: *See Proj. Standards, Ch. 3*
Acoustic Req: *See acoustics narrative, Ch. 4*
Structural Req: *None*
Security: *Locked*
Other Spec Req:

Room Size and Capacity

Proposed Area: *600 SF*
Total Area: *545 SF*
Room Quantity: *1*
Assigned Cap: *0*
Unassigned Cap: *3*
Total Cap: *3*

Finishes, Doors and Windows

Floor: *Seamless resilient sheet*
Base: *Resilient, Cove*
Walls: *Gyp. Bd.*
Wall Finish: *Paint*
Ceiling: *ACT (2'x2')*
Ceiling Height:

Door Size: *3'-6" single leaf*
Door Type: *Wood*
Door Vis Panel: *Yes*
Window Treat: *Light-filtering*
Window Skylight: *None*

Casework and Built-ins

Wall Cabinets: *Wood*
Base Cabinets: *Wood*
Counter Tops: *Epoxy Resin*
Counter (LF): *See diagram*
Counter Height: *36" UON*

Shelving (LF): *Yes*
Drawer Units: *Yes*
White Boards: *None*
Tack Boards *None*
Proj. Screen: *None*

Communications

See Project Design Standards in Chapter 3 and electrical/telecomm narrative in Chapter 4

HVAC

Air Changes: *Research Lab Standard*
Air Circulation: *Research Lab Standard*
Pressure: *Negative to corridor*
Temperature: *Research Lab Standard*
Rel. Humidity: *Research Lab Standard*
Local Exhaust: *As noted*
Air Filtration: *Research Lab Standard*
CO2 Sensor: *Research Lab Standard*
Distribution: *Research Lab Standard*
Other HVAC:

Electrical

See Project Design Standards in Chapter 3 and electrical/telecomm narrative in Chapter 4

Plumbing

Sinks: *Stainless Steel*
Pure Water: *Only as indicated*
Hot/Cold Water: *Yes*
Hose Bibb: *None*
Floor Drain: *None*
Waste: *Lab Waste*
Emer. Eyewash: *None*
Emer. Station: *None*
Gases:
Comp. Air: *Yes, as noted*
Lab Gas: *None*
Vacuum: *Yes, as noted*
CO^2: *None*
Other Gas:
Fire Protection: *Wet Sprinkler*

Equipment

Type	Count	Status
6' Biosafety Cabinet	1	2
Growth Chamber	8	4
Mice Holding Cabinet	1	4

Furniture

Type	Count	Status

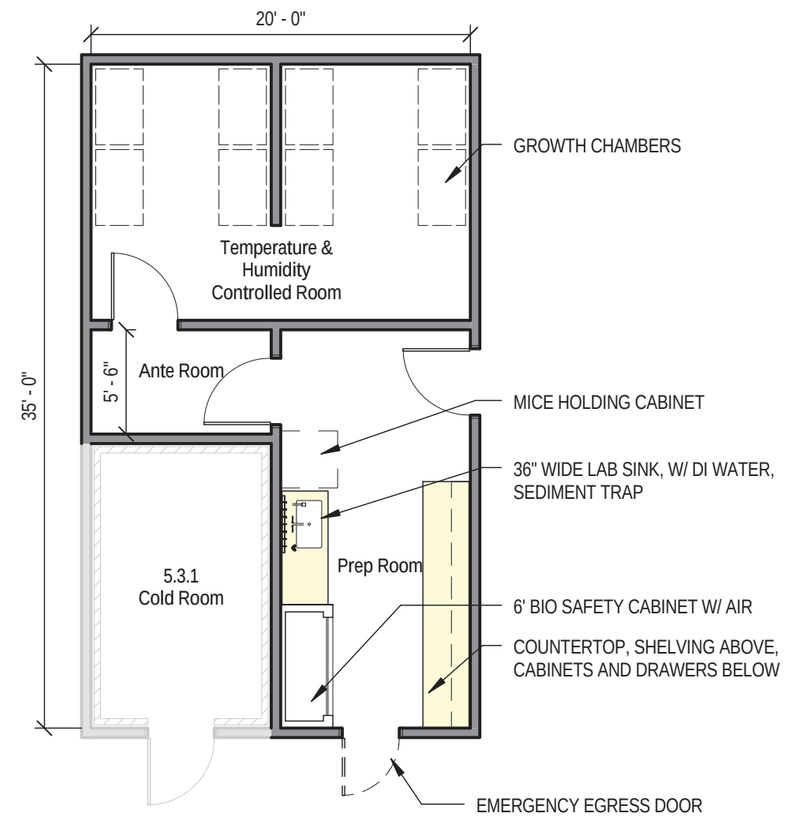

Status Key: **1** = Furnished and Installed by Contractor (CFCI), **2** = Furnished by Owner, Contractor Installed (OFCI), **3** = Furnished and Installed by Owner (OFOI), **4** = Provided Outside of Project Budget

Scale: 1/8" = 1'-0"

CRSA PAYETTE

5.3.10 Animal Holding Room

Room Data Sheet Detail

Department: Biology
Issue Date: WORK IN PROGRESS
Room No:

Space Information

Room Function: Research support
Adjacencies: See Adjacency Diagrams
Access: Faculty
Room Utilization 24 hrs
General Notes:

Special Requirements

Lighting Controls: See Proj. Standards, Ch. 3
Acoustic Req: See acoustics narrative, Ch. 4
Structural Req: None
Security: Locked
Other Spec Req:

Room Size and Capacity

Proposed Area: 1500 SF
Total Area: 1496 SF
Room Quantity: 1
Assigned Cap: 0
Unassigned Cap: 3
Total Cap: 3

Finishes, Doors and Windows

Floor: Epoxy
Base: Integral
Walls: Gyp. Bd.
Wall Finish: Epoxy Paint
Ceiling: ACT (2'x2')
Ceiling Height:

Door Size: 3'-6" single leaf
Door Type: Hollow metal, painted
Door Vis Panel: None
Window Treat: None
Window Skylight: None

Casework and Built-ins

Wall Cabinets: Stainless Steel
Base Cabinets: Stainless Steel
Counter Tops: Stainless Steel
Counter (LF): See diagram
Counter Height: 36" UON

Shelving (LF): Yes
Drawer Units: Yes
White Boards: None
Tack Boards None
Proj. Screen: None

Communications

See Project Design Standards in Chapter 3 and electrical/telecomm narrative in Chapter 4

HVAC

Air Changes: Animal Holding Standard
Air Circulation: Animal Holding Standard
Pressure: Negative to corridor
Temperature: Animal Holding Standard
Rel. Humidity: Animal Holding Standard
Local Exhaust: As noted
Air Filtration: Animal Holding Standard
CO2 Sensor: Animal Holding Standard
Distribution: Animal Holding Standard
Other HVAC:

Electrical

See Project Design Standards in Chapter 3 and electrical/telecomm narrative in Chapter 4

Plumbing

Sinks: Stainless Steel
Pure Water: Only as indicated
Hot/Cold Water: Yes
Hose Bibb: None
Floor Drain: None
Waste: Lab Waste
Emer. Eyewash: None
Emer. Station: None
Gases:
Comp. Air: None
Lab Gas: None
Vacuum: None
CO^2: None
Other Gas:
Fire Protection: Wet Sprinkler

Equipment

Type	Count	Status
Generic Equipment	5	
Glasswasher	1	3
Holding Rack	17	4

Furniture

Type	Count	Status
24"x60" Table	2	3

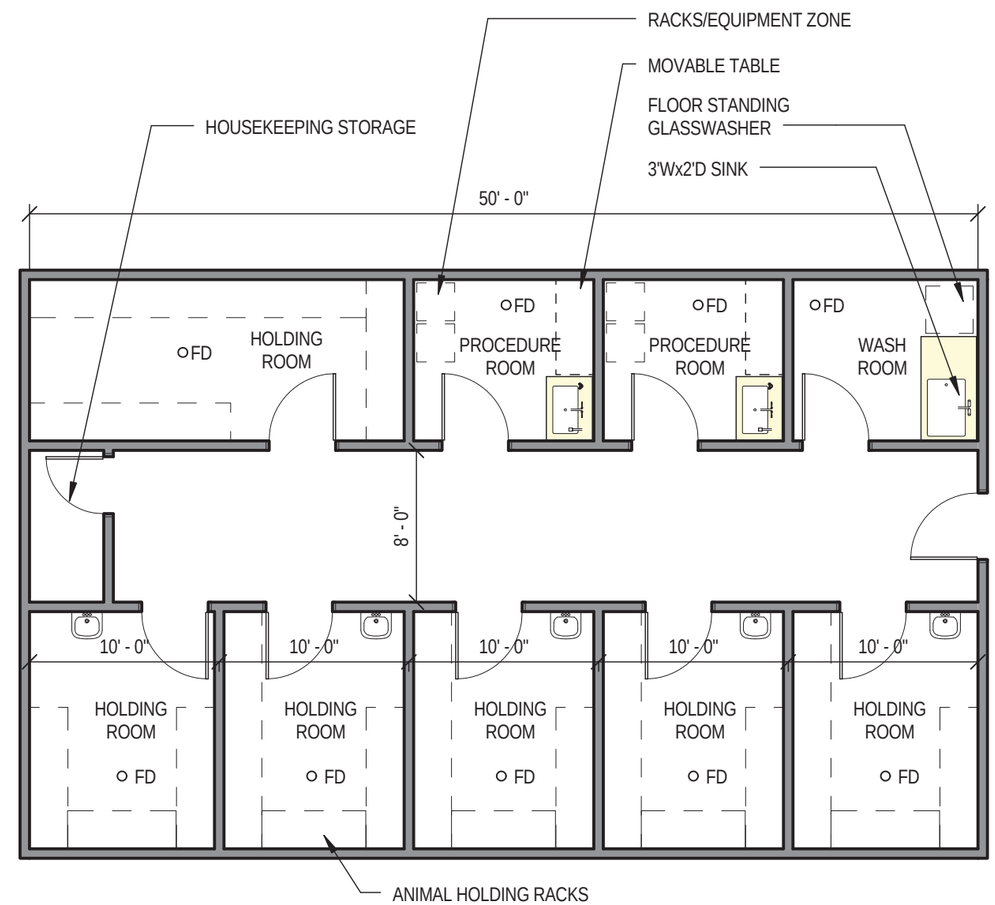

FD = FLOOR DRAIN

Status Key: **1** = Furnished and Installed by Contractor (CFCI), **2** = Furnished by Owner, Contractor Installed (OFCI), **3** = Furnished and Installed by Owner (OFOI), **4** = Provided Outside of Project Budget

Scale: 1/8" = 1'-0"

CRSA PAYETTE

6.1.1 General Biology Teaching Lab

Room Data Sheet Detail

Department: Biology
Issue Date: WORK IN PROGRESS
Room No:

Space Information

Room Function: *Undergraduate teaching laboratory*
Adjacencies: *See Adjacency Diagrams*
Access: *Students, Faculty*
Room Utilization *7:00AM to 6:30PM*
General Notes:

Special Requirements

Lighting Controls: *See Proj. Standards, Ch. 3*
Acoustic Req: *See acoustics narrative, Ch. 4*
Structural Req: *None*
Security: *Locked*
Other Spec Req:

Room Size and Capacity

Proposed Area: *1250 SF*
Total Area: *1243 SF*
Room Quantity: *4*
Assigned Cap: *0*
Unassigned Cap: *25*
Total Cap: *25*

Finishes, Doors and Windows

Floor: *Resilient Tile*
Base: *Resilient, Cove*
Walls: *Gyp. Bd.*
Wall Finish: *Paint*
Ceiling: *ACT (2'x2')*
Ceiling Height: *Varies*

Door Size: *3'-6" single leaf*
Door Type: *Wood*
Door Vis Panel: *Yes*
Window Treat: *Light-filtering*
Window Skylight: *None*

Casework and Built-ins

Wall Cabinets: *Wood*
Base Cabinets: *Wood*
Counter Tops: *Epoxy resin*
Counter (LF): *See diagram*
Counter Height: *36" UON*

Shelving (LF): *Yes*
Drawer Units: *Yes*
White Boards: *Yes, as noted*
Tack Boards *None*
Proj. Screen: *Yes, as noted*

Communications

See Project Design Standards in Chapter 3 and electrical/telecomm narrative in Chapter 4

HVAC

Air Changes: *Teaching Lab Standard*
Air Circulation: *Teaching Lab Standard*
Pressure: *Negative to corridor*
Temperature: *Teaching Lab Standard*
Rel. Humidity: *Teaching Lab Standard*
Local Exhaust: *As noted*
Air Filtration: *Teaching Lab Standard*
CO2 Sensor: *Teaching Lab Standard*
Distribution: *Teaching Lab Standard*
Other HVAC:

Electrical

See Project Design Standards in Chapter 3 and electrical/telecomm narrative in Chapter 4

Plumbing

Sinks: *Epoxy resin, grey*
Pure Water: *Only as indicated*
Hot/Cold Water: *Yes*
Hose Bibb: *None*
Floor Drain: *At all emergency showers*
Waste: *Lab Waste*
Emer. Eyewash: *Yes*
Emer. Station: *Yes*
Gases:
Comp. Air: *Yes, as noted*
Lab Gas: *Yes, as noted*
Vacuum: *Yes, as noted*
CO^2: *None*
Other Gas:
Fire Protection: *Wet Sprinkler*

Equipment

Type	Count	Status
4' Fume Hood	1	1
32"x32" Refrigerator	1	3
Cart	2	3
Generic	1	
Growth Chamber	1	3

Furniture

Type	Count	Status
Chair	1	3
Lab Stool	24	3
Movable Markerboard	2	3

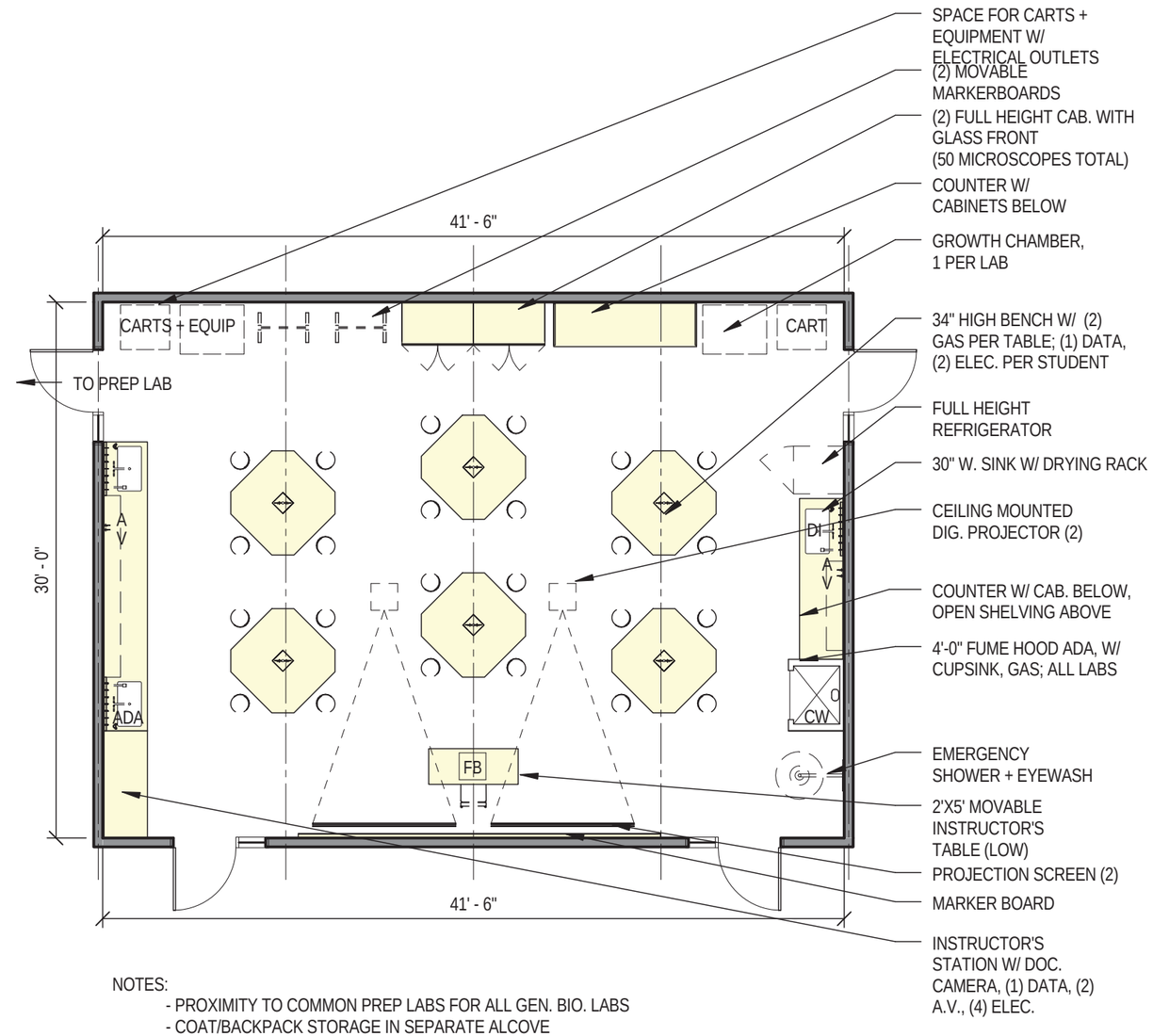

NOTES:
- PROXIMITY TO COMMON PREP LABS FOR ALL GEN. BIO. LABS
- COAT/BACKPACK STORAGE IN SEPARATE ALCOVE
- ABILITY TO PROJECT DIFFERENT IMAGES ON EACH PROJECTOR

Status Key: **1** = Furnished and Installed by Contractor (CFCI), **2** = Furnished by Owner, Contractor Installed (OFCI), **3** = Furnished and Installed by Owner (OFOI), **4** = Provided Outside of Project Budget

Scale: 1/8" = 1'-0"

CRSA PAYETTE

6.1.2 Adv. Physiology / Behavior Teaching Lab

Room Data Sheet Detail

Department: Biology
Issue Date: WORK IN PROGRESS
Room No:

Space Information

Room Function: Undergraduate teaching laboratory
Adjacencies: See Adjacency Diagrams
Access: Students, Faculty
Room Utilization 7:00AM to 6:30PM
General Notes:

Special Requirements

Lighting Controls: See Proj. Standards, Ch. 3
Acoustic Req: See acoustics narrative, Ch. 4
Structural Req: None
Security: Locked
Other Spec Req:

Room Size and Capacity

Proposed Area: 1560 SF
Total Area: 1560 SF
Room Quantity: 1
Assigned Cap: 0
Unassigned Cap: 25
Total Cap: 25

Finishes, Doors and Windows

Floor: Resilient Tile
Base: Resilient, Cove
Walls: Gyp. Bd.
Wall Finish: Paint
Ceiling: ACT (2'x2')
Ceiling Height: Varies

Door Size: 3'-6" single leaf
Door Type: Wood
Door Vis Panel: Yes
Window Treat: Light-filtering
Window Skylight: None

Casework and Built-ins

Wall Cabinets: Wood
Base Cabinets: Wood
Counter Tops: Epoxy resin
Counter (LF): See diagram
Counter Height: 36" UON

Shelving (LF): Yes
Drawer Units: Yes
White Boards: Yes, as noted
Tack Boards None
Proj. Screen: Yes, as noted

Communications

See Project Design Standards in Chapter 3 and electrical/telecomm narrative in Chapter 4

HVAC

Air Changes: Teaching Lab Standard
Air Circulation: Teaching Lab Standard
Pressure: Negative to corridor
Temperature: Teaching Lab Standard
Rel. Humidity: Teaching Lab Standard
Local Exhaust: As noted
Air Filtration: Teaching Lab Standard
CO2 Sensor: Teaching Lab Standard
Distribution: Teaching Lab Standard
Other HVAC:

Electrical

See Project Design Standards in Chapter 3 and electrical/telecomm narrative in Chapter 4

Plumbing

Sinks: Epoxy resin, grey
Pure Water: Only as indicated
Hot/Cold Water: Yes
Hose Bibb: None
Floor Drain: At all emergency showers
Waste: Lab Waste
Emer. Eyewash: Yes
Emer. Station: Yes
Gases:
- *Comp. Air:* Yes, as noted
- *Lab Gas:* Yes, as noted
- *Vacuum:* Yes, as noted
- *CO^2:* None
- *Other Gas:*

Fire Protection: Wet Sprinkler

Equipment

Type	Count	Status
4' Laminar Flow Hood	1	2
6' Fume Hood	1	1
30"D Chemical Storage Cabinet	2	3
32"x32" Refrigerator	1	3
Generic	1	
Snorkel Exhaust	1	1

Furniture

Type	Count	Status
30"D Wire Shelving	4	3
Lab Stool	24	3

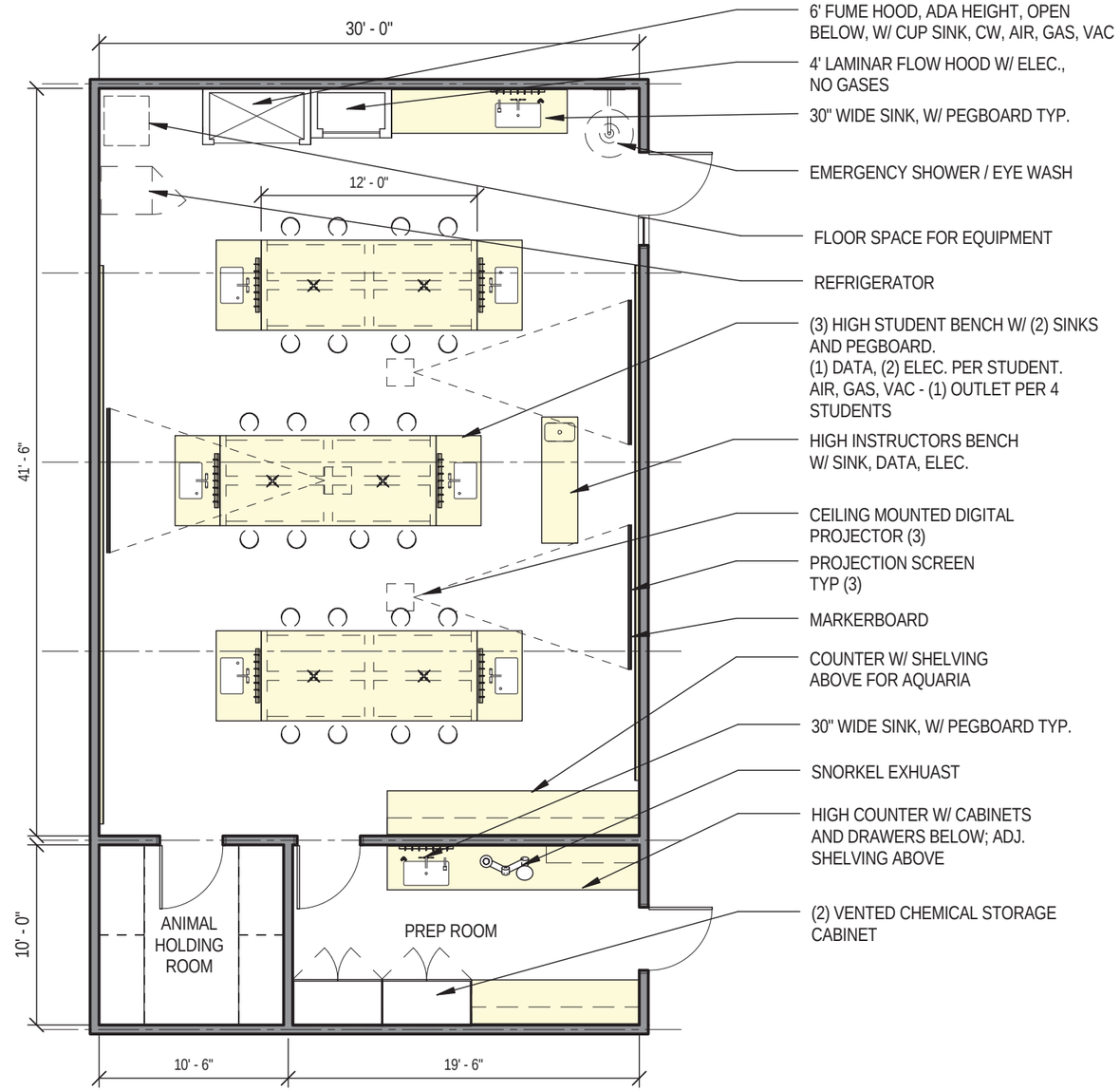

Status Key: **1** = Furnished and Installed by Contractor (CFCI), **2** = Furnished by Owner, Contractor Installed (OFCI), **3** = Furnished and Installed by Owner (OFOI), **4** = Provided Outside of Project Budget

Scale: 1/8" = 1'-0"

CRSA PAYETTE

6.1.3 Human Physiology Teaching Lab

Room Data Sheet Detail

Department: Biology
Issue Date: WORK IN PROGRESS
Room No:

Space Information

Room Function: Undergraduate teaching laboratory
Adjacencies: See Adjacency Diagrams
Access: Students, Faculty
Room Utilization 7:00AM to 6:30PM
General Notes:

Special Requirements

Lighting Controls: See Proj. Standards, Ch. 3
Acoustic Req: See acoustics narrative, Ch. 4
Structural Req: None
Security: Locked
Other Spec Req:

Room Size and Capacity

Proposed Area: 1250 SF
Total Area: 1244 SF
Room Quantity: 1
Assigned Cap: 0
Unassigned Cap: 25
Total Cap: 25

Finishes, Doors and Windows

Floor: Resilient Tile
Base: Resilient, Cove
Walls: Gyp. Bd.
Wall Finish: Paint
Ceiling: ACT (2'x2')
Ceiling Height: Varies

Door Size: 3'-6" single leaf
Door Type: Wood
Door Vis Panel: Yes
Window Treat: Light-filtering
Window Skylight: None

Casework and Built-ins

Wall Cabinets: Wood
Base Cabinets: Wood
Counter Tops: Epoxy Resin
Counter (LF): See diagram
Counter Height: 36" UON

Shelving (LF): Yes
Drawer Units: Yes
White Boards: Yes, as noted
Tack Boards None
Proj. Screen: Yes, as noted

Communications

See Project Design Standards in Chapter 3 and electrical/telecomm narrative in Chapter 4

HVAC

Air Changes: Teaching Lab Standard
Air Circulation: Teaching Lab Standard
Pressure: Negative to corridor
Temperature: Teaching Lab Standard
Rel. Humidity: Teaching Lab Standard
Local Exhaust: As noted
Air Filtration: Teaching Lab Standard
CO2 Sensor: Teaching Lab Standard
Distribution: Teaching Lab Standard
Other HVAC:

Electrical

See Project Design Standards in Chapter 3 and electrical/telecomm narrative in Chapter 4

Plumbing

Sinks: Epoxy resin, grey
Pure Water: Only as indicated
Hot/Cold Water: Yes
Hose Bibb: None
Floor Drain: At all emergency showers
Waste: Lab Waste
Emer. Eyewash: Yes
Emer. Station: Yes
Gases:
- *Comp. Air:* Yes, as noted
- *Lab Gas:* None
- *Vacuum:* Yes, as noted
- *CO^2:* None
- *Other Gas:*

Fire Protection: Wet Sprinkler

Equipment

Type	Count	Status
Refrigerator/Freezer	1	3

Furniture

Type	Count	Status
Lab Stool	24	3

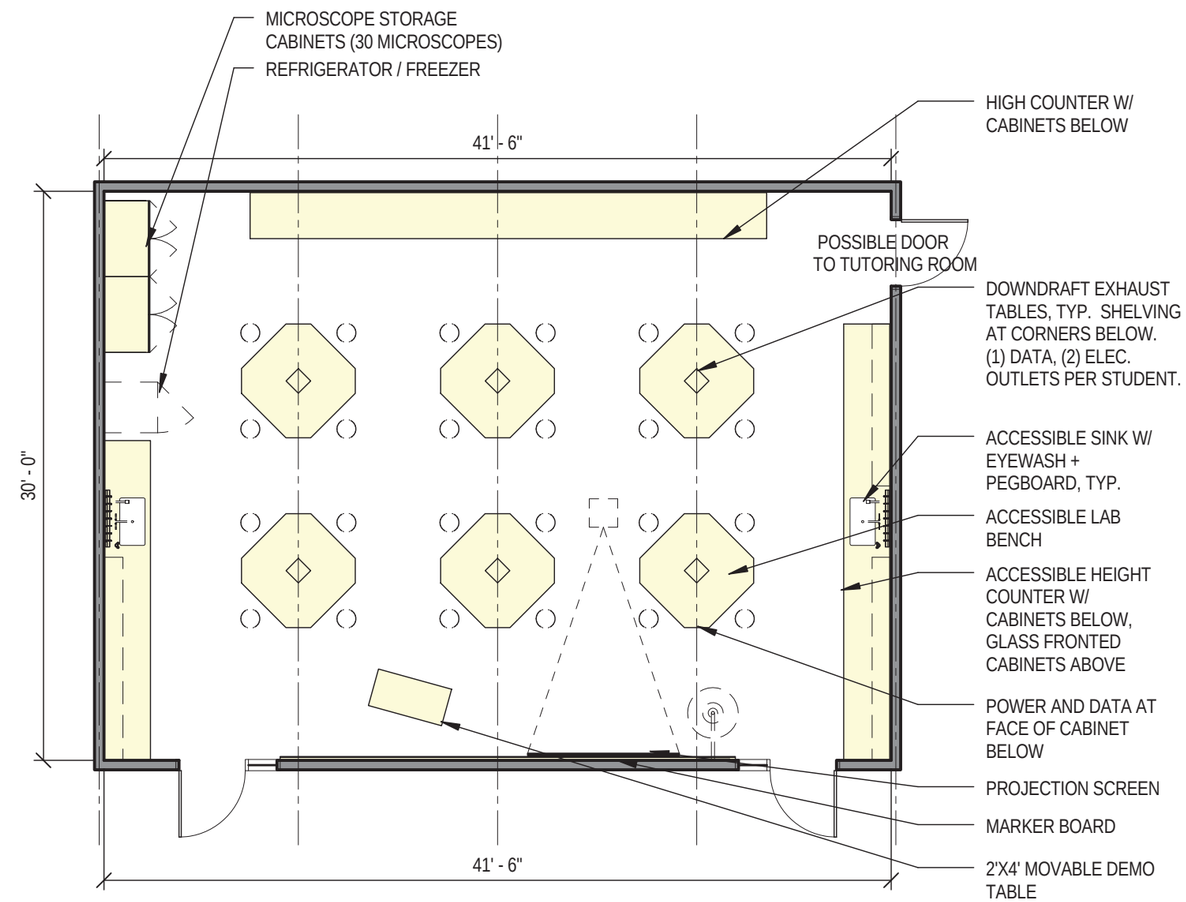

NOTES:
- DESIRE FOR A DIRECT CONNECTION TO A TUTORING ROOM
- DESIRE FOR ACCESS TO A COLD ROOM W/ SPECIMEN STORAGE
- COAT AND BACKPACK STORAGE IN A SEPARATE ALCOVE

Status Key: **1** = Furnished and Installed by Contractor (CFCI), **2** = Furnished by Owner, Contractor Installed (OFCI), **3** = Furnished and Installed by Owner (OFOI), **4** = Provided Outside of Project Budget

Scale: 1/8" = 1'-0"

CRSA PAYETTE

6.1.4 Microbiology Teaching Lab

Room Data Sheet Detail

Department: Biology
Issue Date: WORK IN PROGRESS
Room No:

Space Information

Room Function: Undergraduate teaching laboratory
Adjacencies: See Adjacency Diagrams
Access: Students, Faculty
Room Utilization 7:00AM to 6:30PM
General Notes:

Special Requirements

Lighting Controls: See Proj. Standards, Ch. 3
Acoustic Req: See acoustics narrative, Ch. 4
Structural Req: None
Security: Locked
Other Spec Req:

Room Size and Capacity

Proposed Area: 1250 SF
Total Area: 1243 SF
Room Quantity: 2
Assigned Cap: 0
Unassigned Cap: 25
Total Cap: 25

Finishes, Doors and Windows

Floor: Resilient Tile
Base: Resilient, Cove
Walls: Gyp. Bd.
Wall Finish: Paint
Ceiling: ACT (2'x2')
Ceiling Height: Varies

Door Size: 3'-6" single leaf
Door Type: Wood
Door Vis Panel: Yes
Window Treat: Light-filtering
Window Skylight: None

Casework and Built-ins

Wall Cabinets: Wood
Base Cabinets: Wood
Counter Tops: Epoxy resin
Counter (LF): See diagram
Counter Height: 36" UON

Shelving (LF): Yes
Drawer Units: Yes
White Boards: Yes, as noted
Tack Boards None
Proj. Screen: Yes, as noted

Communications

See Project Design Standards in Chapter 3 and electrical/telecomm narrative in Chapter 4

HVAC

Air Changes: Teaching Lab Standard
Air Circulation: Teaching Lab Standard
Pressure: Negative to corridor
Temperature: Teaching Lab Standard
Rel. Humidity: Teaching Lab Standard
Local Exhaust: As noted
Air Filtration: Teaching Lab Standard
CO2 Sensor: Teaching Lab Standard
Distribution: Teaching Lab Standard
Other HVAC:

Electrical

See Project Design Standards in Chapter 3 and electrical/telecomm narrative in Chapter 4

Plumbing

Sinks: Epoxy resin, grey
Pure Water: Only as indicated
Hot/Cold Water: Yes
Hose Bibb: None
Floor Drain: At all emergency showers
Waste: Lab Waste
Emer. Eyewash: Yes
Emer. Station: Yes
Gases:
- *Comp. Air:* Yes, as noted
- *Lab Gas:* Yes, as noted
- *Vacuum:* Yes, as noted
- *CO^2:* None
- *Other Gas:*

Fire Protection: Wet Sprinkler

Equipment

Type	Count	Status
4' Fume Hood	1	1
4' Laminar Flow Hood	1	2
32"x32" Refrigerator	1	3
Cart	2	3
Freezer	1	3
Generic	3	3

Furniture

Type	Count	Status
Chair	1	3
Lab Stool	24	3

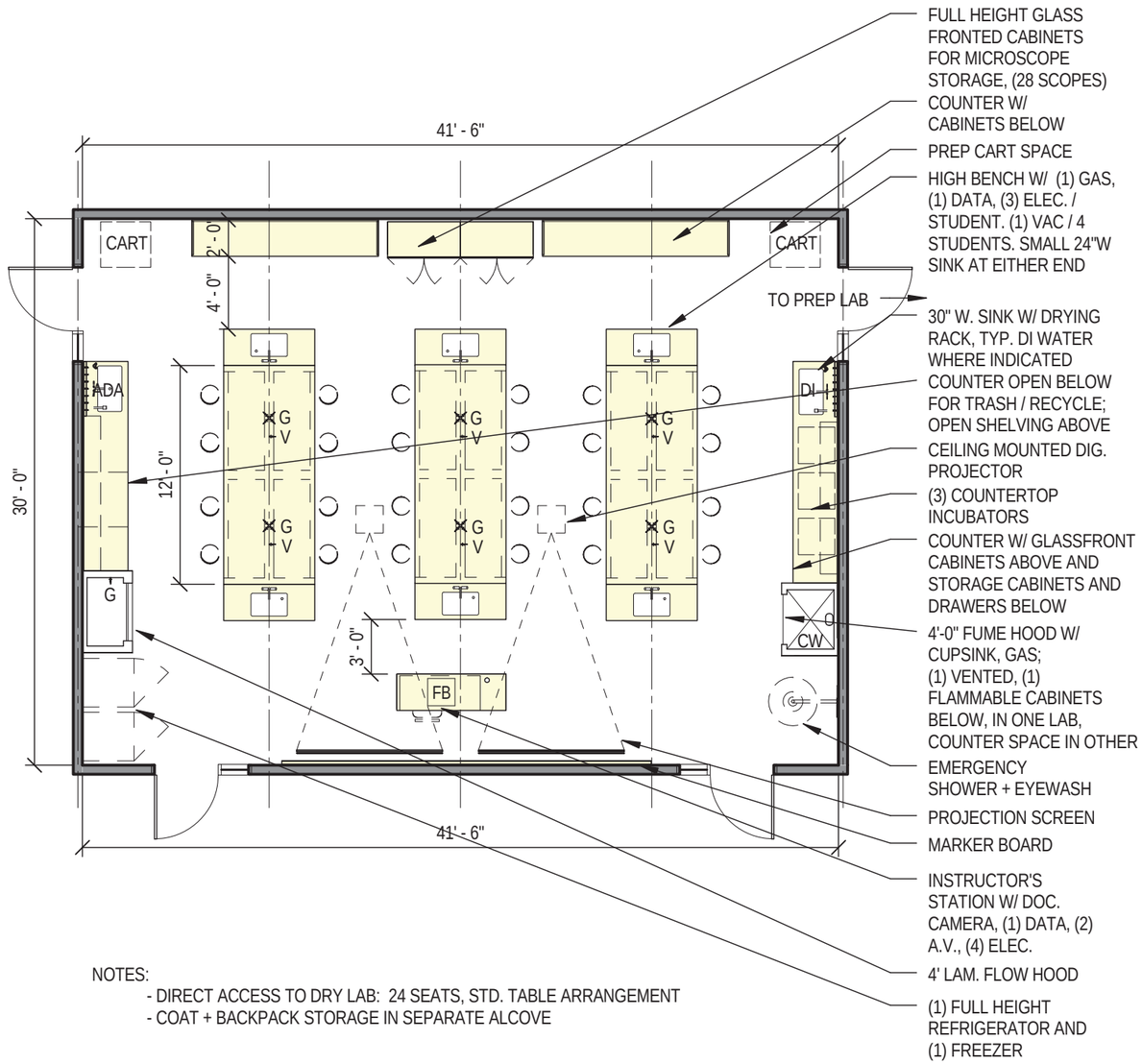

NOTES:
- DIRECT ACCESS TO DRY LAB: 24 SEATS, STD. TABLE ARRANGEMENT
- COAT + BACKPACK STORAGE IN SEPARATE ALCOVE

Status Key: **1** = Furnished and Installed by Contractor (CFCI), **2** = Furnished by Owner, Contractor Installed (OFCI), **3** = Furnished and Installed by Owner (OFOI), **4** = Provided Outside of Project Budget

Scale: 1/8" = 1'-0"

CRSA PAYETTE

6.1.5 Cell / Mol. Bio. / Genetics Teaching Lab

Room Data Sheet Detail

Department: Biology
Issue Date: WORK IN PROGRESS
Room No:

Space Information

Room Function: Undergraduate teaching laboratory
Adjacencies: See Adjacency Diagrams
Access: Students, Faculty
Room Utilization 7:00AM to 6:30PM
General Notes:

Special Requirements

Lighting Controls: See Proj. Standards, Ch. 3
Acoustic Req: See acoustics narrative, Ch. 4
Structural Req: None
Security: Locked
Other Spec Req:

Room Size and Capacity

Proposed Area: 1250 SF
Total Area: 1243 SF
Room Quantity: 1
Assigned Cap: 0
Unassigned Cap: 25
Total Cap: 25

Finishes, Doors and Windows

Floor: Resilient Tile
Base: Resilient, Cove
Walls: Gyp. Bd.
Wall Finish: Paint
Ceiling: ACT (2'x2')
Ceiling Height: Varies

Door Size: 3'-6" single leaf
Door Type: Wood
Door Vis Panel: Yes
Window Treat: Light-filtering
Window Skylight: None

Casework and Built-ins

Wall Cabinets: Wood
Base Cabinets: Wood
Counter Tops: Epoxy resin
Counter (LF): See diagram
Counter Height: 36" UON

Shelving (LF): Yes
Drawer Units: Yes
White Boards: Yes, as noted
Tack Boards None
Proj. Screen: Yes, as noted

Communications

See Project Design Standards in Chapter 3 and electrical/telecomm narrative in Chapter 4

HVAC

Air Changes: Teaching Lab Standard
Air Circulation: Teaching Lab Standard
Pressure: Negative to corridor
Temperature: Teaching Lab Standard
Rel. Humidity: Teaching Lab Standard
Local Exhaust: As noted
Air Filtration: Teaching Lab Standard
CO2 Sensor: Teaching Lab Standard
Distribution: Teaching Lab Standard
Other HVAC:

Electrical

See Project Design Standards in Chapter 3 and electrical/telecomm narrative in Chapter 4

Plumbing

Sinks: Epoxy resin, grey
Pure Water: Only as indicated
Hot/Cold Water: Yes
Hose Bibb: None
Floor Drain: At all emergency showers
Waste: Lab Waste
Emer. Eyewash: Yes
Emer. Station: Yes
Gases:
- *Comp. Air:* Yes, as noted
- *Lab Gas:* Yes, as noted
- *Vacuum:* Yes, as noted
- *CO^2:* None
- *Other Gas:*

Fire Protection: Wet Sprinkler

Equipment

Type	Count	Status
4' Fume Hood	1	1
32"x32" Refrigerator	1	3
Freezer	1	3
Growth Chamber	1	3

Furniture

Type	Count	Status
Chair	1	3
Lab Stool	24	3
Movable Markerboard	2	3

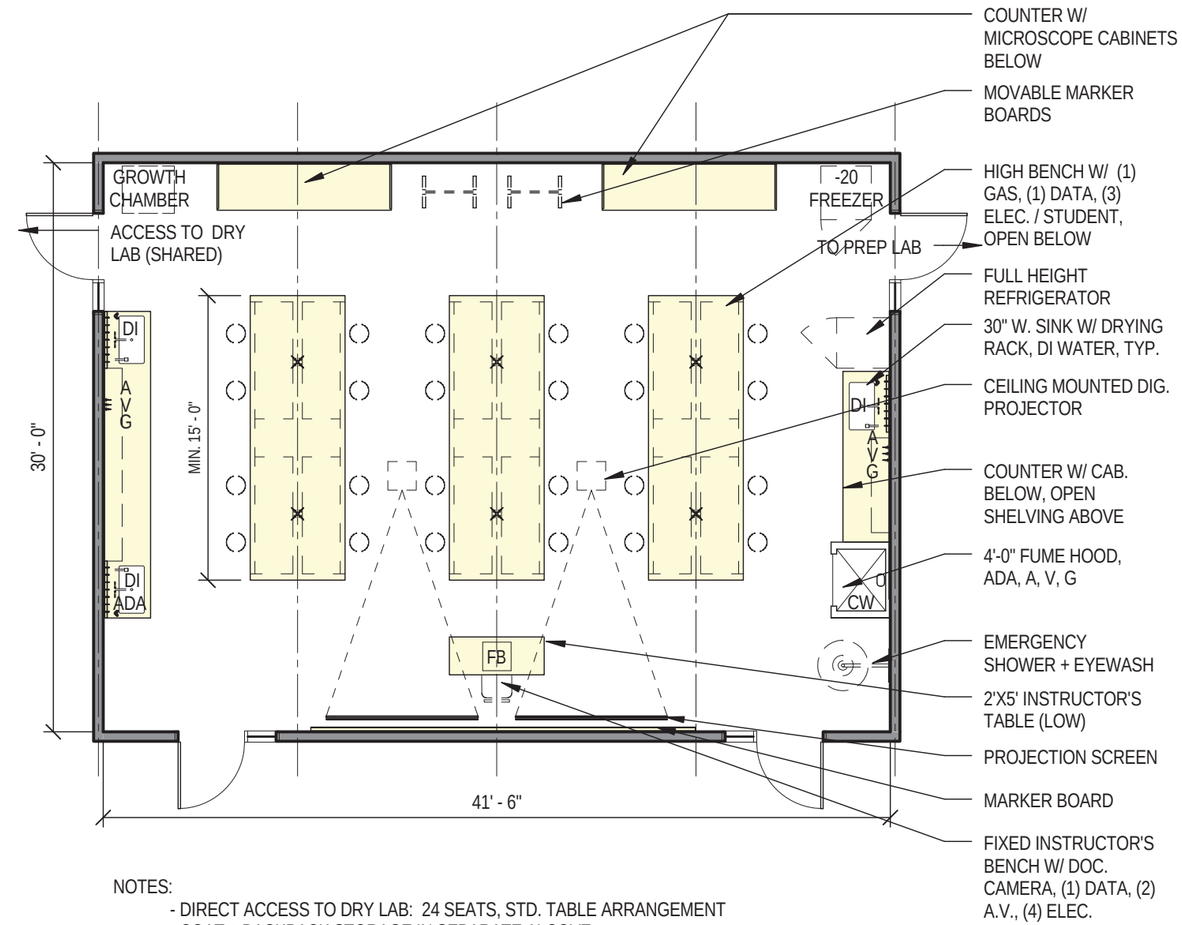

NOTES:
- DIRECT ACCESS TO DRY LAB: 24 SEATS, STD. TABLE ARRANGEMENT
- COAT + BACKPACK STORAGE IN SEPARATE ALCOVE
- TYPICAL EQUIPMENT ON BENCH: TABLE TOP CENTRIFUGE, THERMOCYCLER, VORTEX, HEATING BLOCK

Status Key: **1** = Furnished and Installed by Contractor (CFCI), **2** = Furnished by Owner, Contractor Installed (OFCI), **3** = Furnished and Installed by Owner (OFOI), **4** = Provided Outside of Project Budget

Scale: 1/8" = 1'-0"

CRSA PAYETTE

6.1.6 Public Health Teaching Lab

Room Data Sheet Detail

Department: Biology
Issue Date: WORK IN PROGRESS
Room No:

Space Information

Room Function: Undergraduate teaching laboratory
Adjacencies: See Adjacency Diagrams
Access: Students, Faculty
Room Utilization 7:00AM to 6:30PM
General Notes:

Special Requirements

Lighting Controls: See Proj. Standards, Ch. 3
Acoustic Req: See acoustics narrative, Ch. 4
Structural Req: None
Security: Locked
Other Spec Req:

Room Size and Capacity

Proposed Area: 1560 SF
Total Area: 1560 SF
Room Quantity: 1
Assigned Cap: 0
Unassigned Cap: 25
Total Cap: 25

Finishes, Doors and Windows

Floor: Resilient Tile
Base: Resilient, Cove
Walls: Gyp. Bd.
Wall Finish: Paint
Ceiling: ACT (2'x2')
Ceiling Height: Varies

Door Size: 3'-6" single leaf
Door Type: Wood
Door Vis Panel: Yes
Window Treat: Light-filtering
Window Skylight: None

Casework and Built-ins

Wall Cabinets: Wood
Base Cabinets: Wood
Counter Tops: Epoxy resin
Counter (LF): See diagram
Counter Height: 36" UON

Shelving (LF): Yes
Drawer Units: Yes
White Boards: Yes, as noted
Tack Boards None
Proj. Screen: Yes, as noted

Communications

See Project Design Standards in Chapter 3 and electrical/telecomm narrative in Chapter 4

HVAC

Air Changes: Teaching Lab Standard
Air Circulation: Teaching Lab Standard
Pressure: Negative to corridor
Temperature: Teaching Lab Standard
Rel. Humidity: Teaching Lab Standard
Local Exhaust: As noted
Air Filtration: Teaching Lab Standard
CO2 Sensor: Teaching Lab Standard
Distribution: Teaching Lab Standard
Other HVAC:

Electrical

See Project Design Standards in Chapter 3 and electrical/telecomm narrative in Chapter 4

Plumbing

Sinks: Epoxy resin, grey
Pure Water: Only as indicated
Hot/Cold Water: Yes
Hose Bibb: None
Floor Drain: At all emergency showers
Waste: Lab Waste
Emer. Eyewash: Yes
Emer. Station: Yes
Gases:
- *Comp. Air:* Yes, as noted
- *Lab Gas:* Yes, as noted
- *Vacuum:* Yes, as noted
- *CO^2:* None
- *Other Gas:*

Fire Protection: Wet Sprinkler

Equipment

Type	Count	Status
4' Fume Hood	1	1
18"D Chemical Storage Cabinet 4'	1	3
Generic	2	
Snorkel Exhaust	3	1

Furniture

Type	Count	Status
30"D Wire Shelving	10	3
Chair	24	3

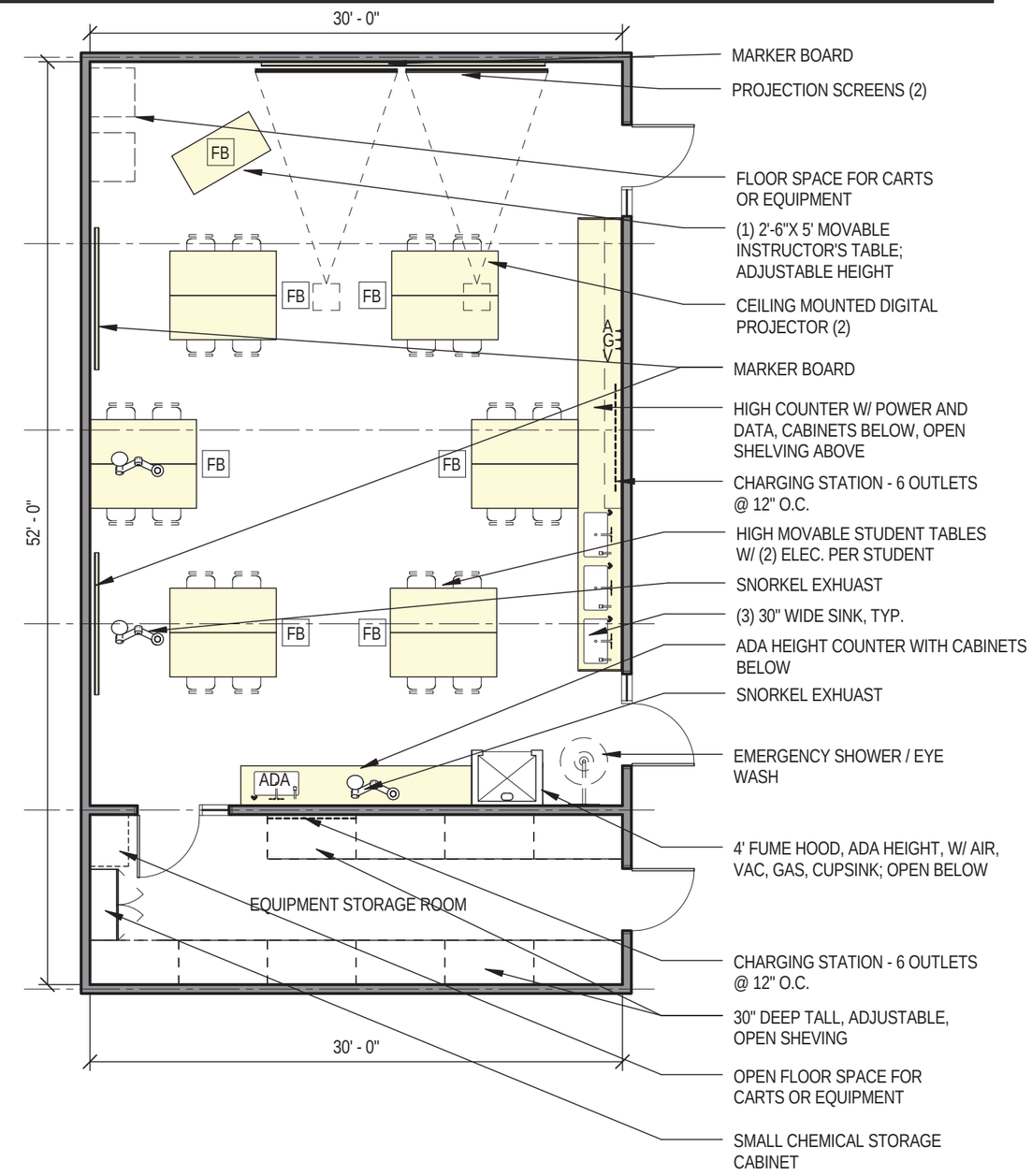

Status Key: **1** = Furnished and Installed by Contractor (CFCI), **2** = Furnished by Owner, Contractor Installed (OFCI), **3** = Furnished and Installed by Owner (OFOI), **4** = Provided Outside of Project Budget

Scale: 1/8" = 1'-0"

CRSA PAYETTE

6.1.7 Plant / Insect Collections Teaching Lab

Room Data Sheet Detail

Department: Biology
Issue Date: WORK IN PROGRESS
Room No:

Space Information

Room Function: Undergraduate teaching laboratory
Adjacencies: See Adjacency Diagrams
Access: Students, Faculty
Room Utilization 7:00AM to 6:30PM
General Notes:

Special Requirements

Lighting Controls: See Proj. Standards, Ch. 3
Acoustic Req: See acoustics narrative, Ch. 4
Structural Req: None
Security: Locked
Other Spec Req:

Room Size and Capacity

Proposed Area: 1250 SF
Total Area: 1245 SF
Room Quantity: 1
Assigned Cap: 0
Unassigned Cap: 25
Total Cap: 25

Finishes, Doors and Windows

Floor: Resilient Tile
Base: Resilient, Cove
Walls: Gyp. Bd.
Wall Finish: Paint
Ceiling: ACT (2'x2')
Ceiling Height: Varies

Door Size: 3'-6" single leaf
Door Type: Wood
Door Vis Panel: Yes
Window Treat: Light-filtering
Window Skylight: None

Casework and Built-ins

Wall Cabinets: Wood
Base Cabinets: Wood
Counter Tops: Epoxy resin
Counter (LF): See diagram
Counter Height: 36" UON

Shelving (LF): Yes
Drawer Units: Yes
White Boards: Yes, as noted
Tack Boards None
Proj. Screen: Yes, as noted

Communications

See Project Design Standards in Chapter 3 and electrical/telecomm narrative in Chapter 4

HVAC

Air Changes: Teaching Lab Standard
Air Circulation: Teaching Lab Standard
Pressure: Negative to corridor
Temperature: Teaching Lab Standard
Rel. Humidity: Teaching Lab Standard
Local Exhaust: As noted
Air Filtration: Teaching Lab Standard
CO2 Sensor: Teaching Lab Standard
Distribution: Teaching Lab Standard
Other HVAC:

Electrical

See Project Design Standards in Chapter 3 and electrical/telecomm narrative in Chapter 4

Plumbing

Sinks: Epoxy resin, grey
Pure Water: Only as indicated
Hot/Cold Water: Yes
Hose Bibb: None
Floor Drain: At all emergency showers
Waste: Lab Waste
Emer. Eyewash: Yes
Emer. Station: Yes
Gases:
- *Comp. Air:* Yes, as noted
- *Lab Gas:* Yes, as noted
- *Vacuum:* Yes, as noted
- *CO^2:* None
- *Other Gas:*

Fire Protection: Wet Sprinkler

Equipment

Type	Count	Status
32"x32" Refrigerator	1	3

Furniture

Type	Count	Status
Chair	1	3
Lab Stool	24	3

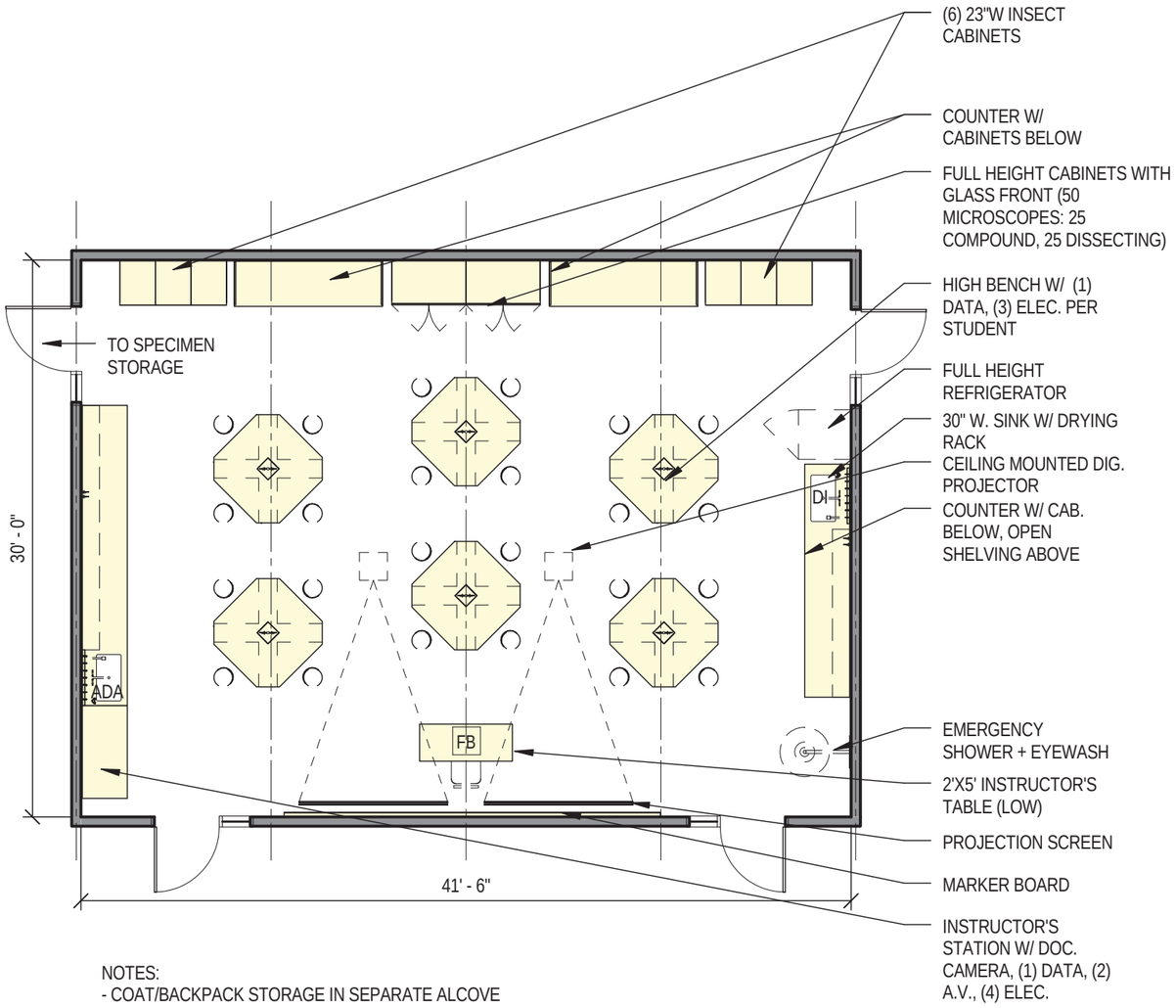

NOTES:
- COAT/BACKPACK STORAGE IN SEPARATE ALCOVE

Status Key: **1** = Furnished and Installed by Contractor (CFCI), **2** = Furnished by Owner, Contractor Installed (OFCI), **3** = Furnished and Installed by Owner (OFOI), **4** = Provided Outside of Project Budget

Scale: 1/8" = 1'-0"

CRSA PAYETTE

6.1.8 Vertebrate / Zoology Collections Teaching Lab

Room Data Sheet Detail

Department: Biology
Issue Date: WORK IN PROGRESS
Room No:

Space Information

Room Function: *Undergraduate teaching laboratory*
Adjacencies: *See Adjacency Diagrams*
Access: *Students, Faculty*
Room Utilization *7:00AM to 6:30PM*
General Notes:

Special Requirements

Lighting Controls: *See Proj. Standards, Ch. 3*
Acoustic Req: *See acoustics narrative, Ch. 4*
Structural Req: *None*
Security: *Locked*
Other Spec Req:

Room Size and Capacity

Proposed Area: *1250 SF*
Total Area: *1245 SF*
Room Quantity: *1*
Assigned Cap: *0*
Unassigned Cap: *25*
Total Cap: *25*

Finishes, Doors and Windows

Floor: *Resilient Tile*
Base: *Resilient, Cove*
Walls: *Gyp. Bd.*
Wall Finish: *Paint*
Ceiling: *ACT (2'x2')*
Ceiling Height: *Varies*

Door Size: *3'-6" single leaf*
Door Type: *Wood*
Door Vis Panel: *Yes*
Window Treat: *Light-filtering*
Window Skylight: *None*

Casework and Built-ins

Wall Cabinets: *Wood*
Base Cabinets: *Wood*
Counter Tops: *Epoxy resin*
Counter (LF): *See diagram*
Counter Height: *36" UON*

Shelving (LF): *Yes*
Drawer Units: *Yes*
White Boards: *Yes, as noted*
Tack Boards *None*
Proj. Screen: *Yes, as noted*

Communications

See Project Design Standards in Chapter 3 and electrical/telecomm narrative in Chapter 4

HVAC

Air Changes: *Teaching Lab Standard*
Air Circulation: *Teaching Lab Standard*
Pressure: *Negative to corridor*
Temperature: *Teaching Lab Standard*
Rel. Humidity: *Teaching Lab Standard*
Local Exhaust: *As noted*
Air Filtration: *Teaching Lab Standard*
CO2 Sensor: *Teaching Lab Standard*
Distribution: *Teaching Lab Standard*
Other HVAC:

Electrical

See Project Design Standards in Chapter 3 and electrical/telecomm narrative in Chapter 4

Plumbing

Sinks: *Epoxy resin, grey*
Pure Water: *Only as indicated*
Hot/Cold Water: *Yes*
Hose Bibb: *None*
Floor Drain: *At all emergency showers*
Waste: *Lab Waste*
Emer. Eyewash: *Yes*
Emer. Station: *Yes*
Gases:
Comp. Air: *Yes, as noted*
Lab Gas: *Yes, as noted*
Vacuum: *Yes, as noted*
CO^2: *None*
Other Gas:
Fire Protection: *Wet Sprinkler*

Equipment

Type	Count	Status
Cart	2	3
Generic	2	
Snorkel Exhaust	4	1

Furniture

Type	Count	Status
Chair	1	3
Lab Stool	24	3

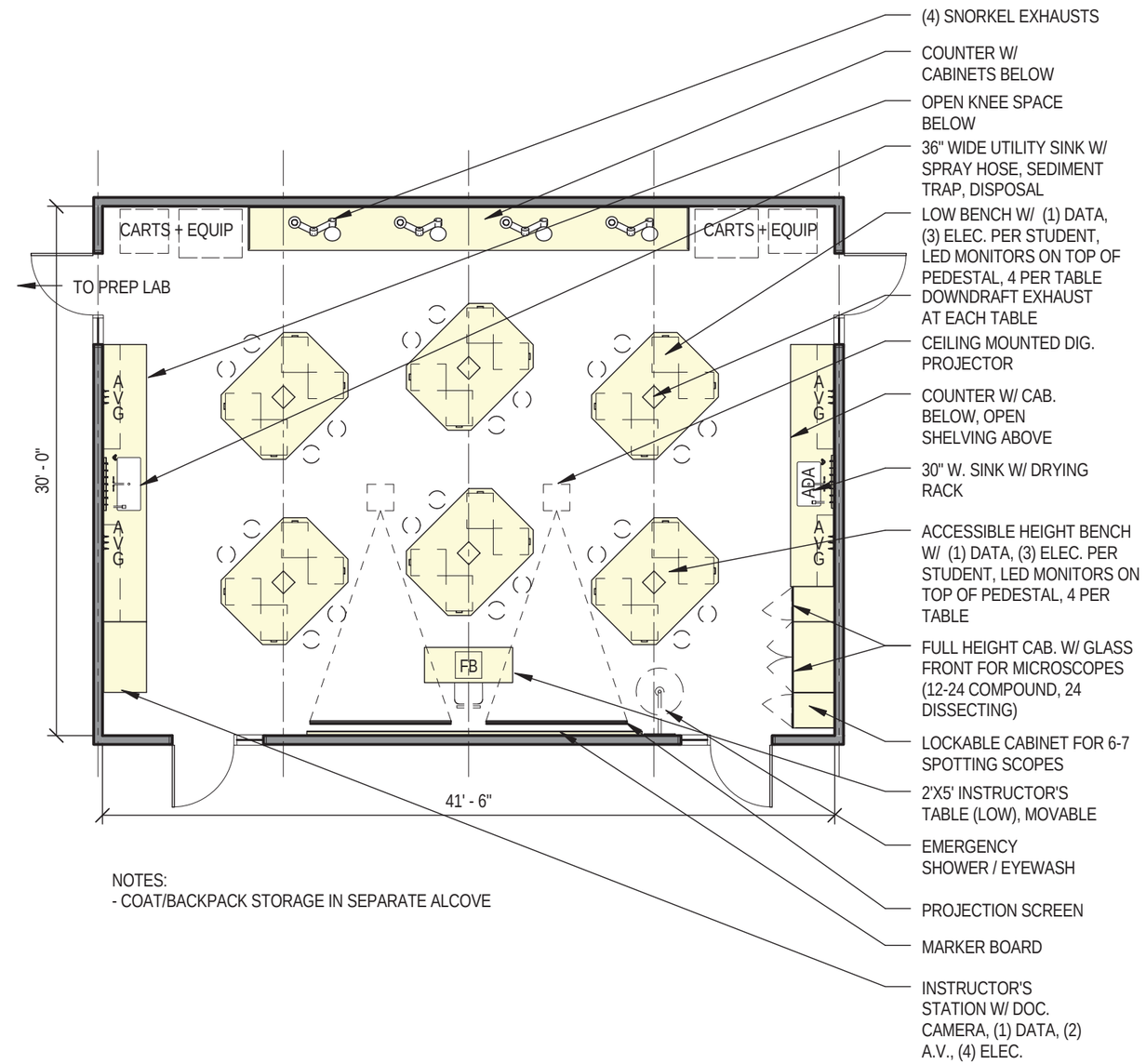

NOTES:
- COAT/BACKPACK STORAGE IN SEPARATE ALCOVE

Scale: 1/8" = 1'-0"

Status Key: **1** = Furnished and Installed by Contractor (CFCI), **2** = Furnished by Owner, Contractor Installed (OFCI), **3** = Furnished and Installed by Owner (OFOI), **4** = Provided Outside of Project Budget

CRSA PAYETTE

6.1.9 Cadaver Lab

Room Data Sheet Detail

Department: Biology
Issue Date: WORK IN PROGRESS
Room No:

Space Information

Room Function: *Undergraduate teaching laboratory*
Adjacencies: *See Adjacency Diagrams*
Access: *Students, Faculty*
Room Utilization *7:00AM to 6:30PM*
General Notes:

Special Requirements

Lighting Controls: *See Proj. Standards, Ch. 3*
Acoustic Req: *See acoustics narrative, Ch. 4*
Structural Req: *None*
Security: *Locked*
Other Spec Req:

Room Size and Capacity

Proposed Area: *1100 SF*
Total Area: *1104 SF*
Room Quantity: *1*
Assigned Cap: *0*
Unassigned Cap: *25*
Total Cap: *25*

Finishes, Doors and Windows

Floor: *Resilient Tile*
Base: *Resilient, Cove*
Walls: *Gyp. Bd.*
Wall Finish: *Paint*
Ceiling: *ACT (2'x2')*
Ceiling Height: *Varies*

Door Size: *3'-6" single leaf*
Door Type: *Wood*
Door Vis Panel: *Yes*
Window Treat: *Light-filtering*
Window Skylight: *None*

Casework and Built-ins

Wall Cabinets: *Wood*
Base Cabinets: *Wood*
Counter Tops: *Epoxy resin*
Counter (LF): *See diagram*
Counter Height: *36" UON*

Shelving (LF): *None*
Drawer Units: *Yes*
White Boards: *Yes, as noted*
Tack Boards *None*
Proj. Screen: *Yes, as noted*

Communications

See Project Design Standards in Chapter 3 and electrical/telecomm narrative in Chapter 4

HVAC

Air Changes: *Teaching Lab Standard*
Air Circulation: *Teaching Lab Standard*
Pressure: *Negative to corridor*
Temperature: *Teaching Lab Standard*
Rel. Humidity: *Teaching Lab Standard*
Local Exhaust: *As noted*
Air Filtration: *Teaching Lab Standard*
CO2 Sensor: *Teaching Lab Standard*
Distribution: *Teaching Lab Standard*
Other HVAC:

Electrical

See Project Design Standards in Chapter 3 and electrical/telecomm narrative in Chapter 4

Plumbing

Sinks: *Epoxy resin, grey*
Pure Water: *Only as indicated*
Hot/Cold Water: *Yes*
Hose Bibb: *None*
Floor Drain: *At all emergency showers*
Waste: *Lab Waste*
Emer. Eyewash: *Yes*
Emer. Station: *Yes*
Gases:
Comp. Air: *Yes, as noted*
Lab Gas: *Yes, as noted*
Vacuum: *Yes, as noted*
CO^2: *None*
Other Gas:
Fire Protection: *Wet Sprinkler*

Equipment

Type	Count	Status

Furniture

Type	Count	Status
24"x24" Table	2	3
24"x48" Table	7	3
30"x78" Cadaver Table - EXISTING	7	4
30"x78" Cadaver Table - NEW	1	3

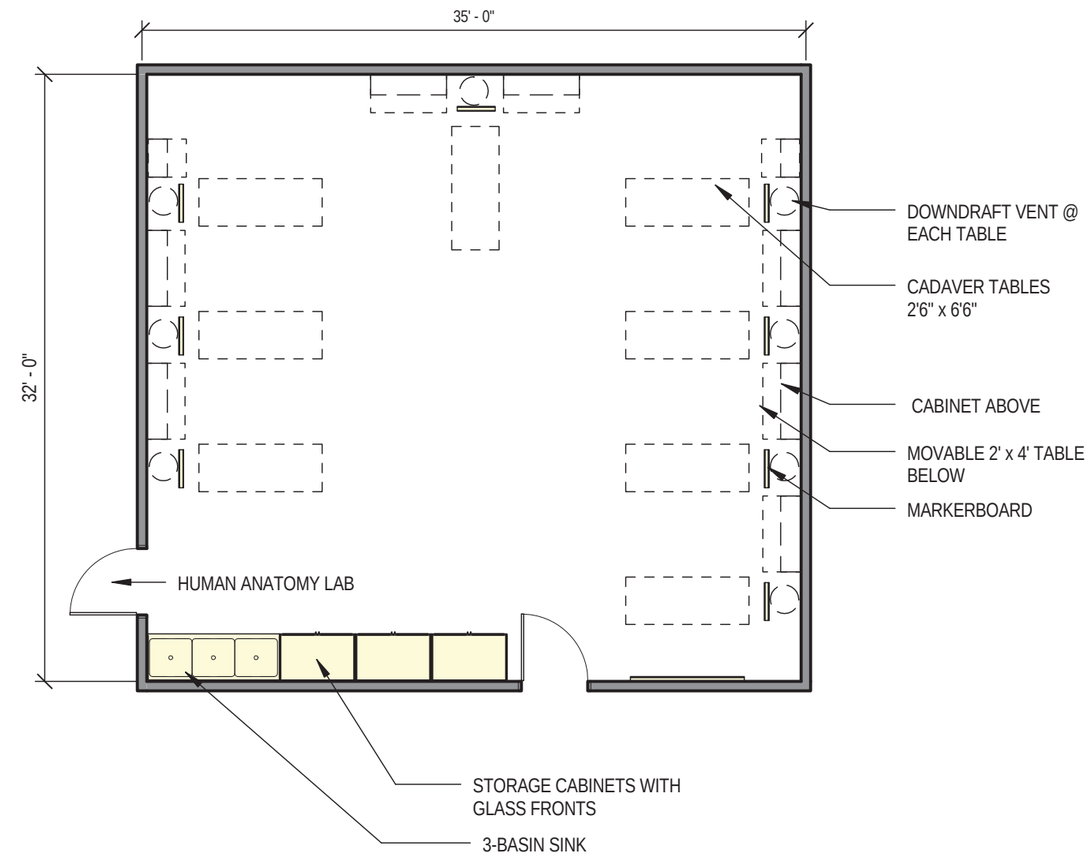

Status Key: **1** = Furnished and Installed by Contractor (CFCI), **2** = Furnished by Owner, Contractor Installed (OFCI), **3** = Furnished and Installed by Owner (OFOI), **4** = Provided Outside of Project Budget

Scale: 1/8" = 1'-0"

CRSA PAYETTE

6.1.10 Human Anatomy Lab

Room Data Sheet Detail

Department: Biology
Issue Date: WORK IN PROGRESS
Room No: *5.3.40*

Space Information

Room Function: *Undergraduate teaching laboratory*
Adjacencies: *See Adjacency Diagrams*
Access: *Students, Faculty*
Room Utilization *7:00AM to 6:30PM*
General Notes:

Special Requirements

Lighting Controls: *See Proj. Standards, Ch. 3*
Acoustic Req: *See acoustics narrative, Ch. 4*
Structural Req: *None*
Security: *Locked*
Other Spec Req:

Room Size and Capacity

Proposed Area: *960 SF*
Total Area: *945 SF*
Room Quantity: *1*
Assigned Cap: *0*
Unassigned Cap: *25*
Total Cap: *25*

Finishes, Doors and Windows

Floor: *Resilient Tile*
Base: *Resilient, Cove*
Walls: *Gyp. Bd.*
Wall Finish: *Paint*
Ceiling: *ACT (2'x2')*
Ceiling Height: *Varies*

Door Size: *3'-6" single leaf*
Door Type: *Wood*
Door Vis Panel: *Yes*
Window Treat: *Light-filtering*
Window Skylight: *None*

Casework and Built-ins

Wall Cabinets: *Wood*
Base Cabinets: *Wood*
Counter Tops: *Epoxy resin*
Counter (LF): *See diagram*
Counter Height: *36" UON*

Shelving (LF): *Yes*
Drawer Units: *Yes*
White Boards: *Yes, as noted*
Tack Boards *None*
Proj. Screen: *Yes, as noted*

Communications

See Project Design Standards in Chapter 3 and electrical/telecomm narrative in Chapter 4

HVAC

Air Changes: *Teaching Lab Standard*
Air Circulation: *Teaching Lab Standard*
Pressure: *Negative to corridor*
Temperature: *Teaching Lab Standard*
Rel. Humidity: *Teaching Lab Standard*
Local Exhaust: *As noted*
Air Filtration: *Teaching Lab Standard*
CO2 Sensor: *Teaching Lab Standard*
Distribution: *Teaching Lab Standard*
Other HVAC:

Electrical

See Project Design Standards in Chapter 3 and electrical/telecomm narrative in Chapter 4

Plumbing

Sinks: *Epoxy resin, grey*
Pure Water: *Only as indicated*
Hot/Cold Water: *Yes*
Hose Bibb: *None*
Floor Drain: *At all emergency showers*
Waste: *Lab Waste*
Emer. Eyewash: *Yes*
Emer. Station: *Yes*
Gases:
Comp. Air: *Yes, as noted*
Lab Gas: *Yes, as noted*
Vacuum: *Yes, as noted*
CO^2: *None*
Other Gas:
Fire Protection: *Wet Sprinkler*

Equipment

Type	Count	Status

Furniture

Type	Count	Status
30"x60" Table	1	3
Chair	24	3

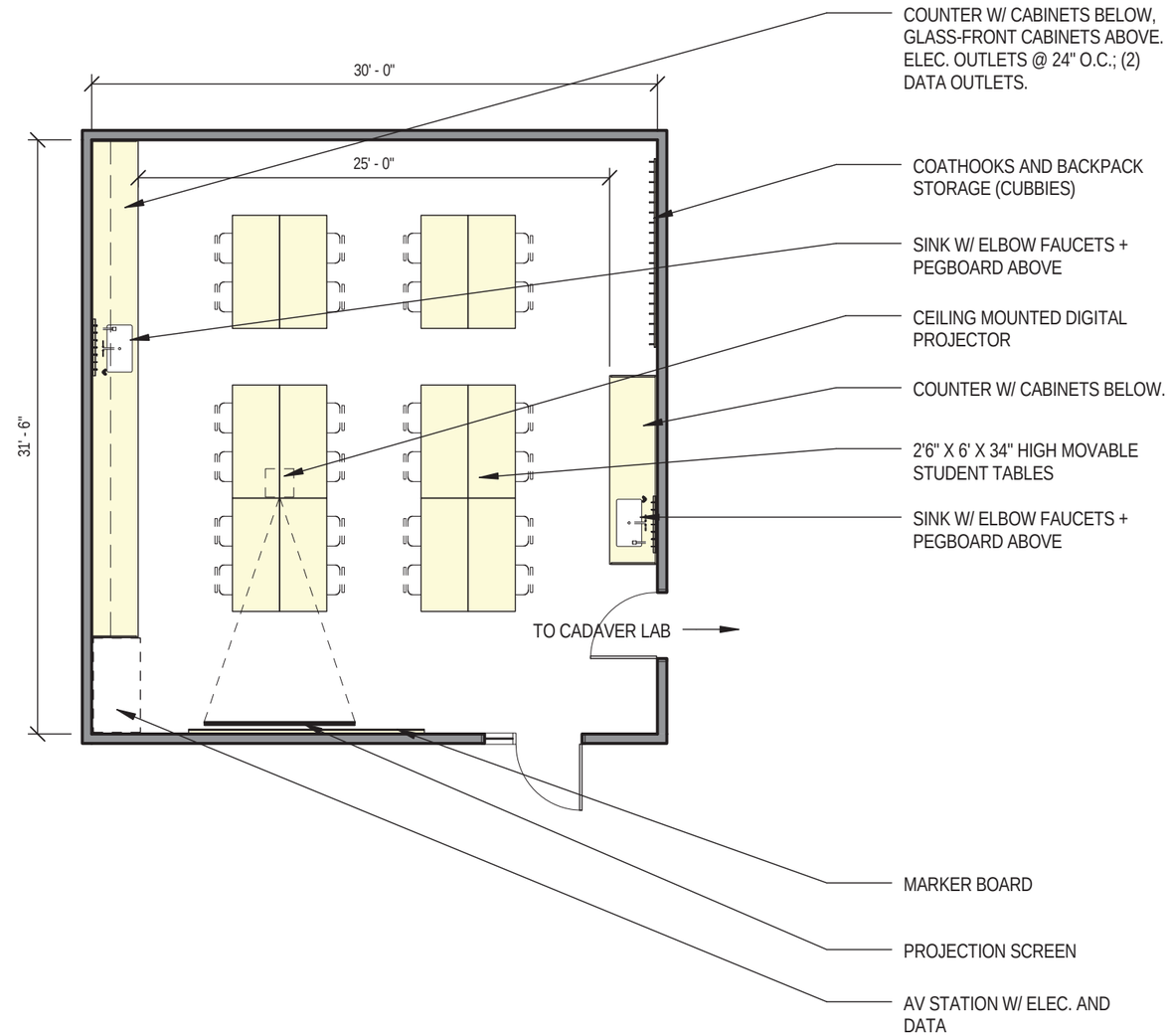

Status Key: **1** = Furnished and Installed by Contractor (CFCI), **2** = Furnished by Owner, Contractor Installed (OFCI), **3** = Furnished and Installed by Owner (OFOI), **4** = Provided Outside of Project Budget

Scale: 1/8" = 1'-0"

CRSA PAYETTE

6.1.11 Ecology Teaching Lab

Room Data Sheet Detail

Department: Biology
Issue Date: WORK IN PROGRESS
Room No:

Space Information

Room Function: Undergraduate teaching laboratory
Adjacencies: See Adjacency Diagrams
Access: Students, Faculty
Room Utilization 7:00AM to 6:30PM
General Notes:

Special Requirements

Lighting Controls: See Proj. Standards, Ch. 3
Acoustic Req: See acoustics narrative, Ch. 4
Structural Req: None
Security: Locked
Other Spec Req:

Room Size and Capacity

Proposed Area: 1560 SF
Total Area: 1560 SF
Room Quantity: 1
Assigned Cap: 0
Unassigned Cap: 25
Total Cap: 25

Finishes, Doors and Windows

Floor: Resilient Tile
Base: Resilient, Cove
Walls: Gyp. Bd.
Wall Finish: Paint
Ceiling: ACT (2'x2')
Ceiling Height: Varies

Door Size: 3'-6" single leaf
Door Type: Wood
Door Vis Panel: Yes
Window Treat: Light-filtering
Window Skylight: None

Casework and Built-ins

Wall Cabinets: Wood
Base Cabinets: Wood
Counter Tops: Epoxy resin
Counter (LF): See diagram
Counter Height: 36" UON

Shelving (LF): Yes
Drawer Units: Yes
White Boards: Yes, as noted
Tack Boards None
Proj. Screen: Yes, as noted

Communications

See Project Design Standards in Chapter 3 and electrical/telecomm narrative in Chapter 4

HVAC

Air Changes: Teaching Lab Standard
Air Circulation: Teaching Lab Standard
Pressure: Negative to corridor
Temperature: Teaching Lab Standard
Rel. Humidity: Teaching Lab Standard
Local Exhaust: As noted
Air Filtration: Teaching Lab Standard
CO2 Sensor: Teaching Lab Standard
Distribution: Teaching Lab Standard
Other HVAC:

Electrical

See Project Design Standards in Chapter 3 and electrical/telecomm narrative in Chapter 4

Plumbing

Sinks: Epoxy resin, grey
Pure Water: Only as indicated
Hot/Cold Water: Yes
Hose Bibb: None
Floor Drain: At all emergency showers
Waste: Lab Waste
Emer. Eyewash: Yes
Emer. Station: Yes
Gases:
Comp. Air: Yes, as noted
Lab Gas: Yes, as noted
Vacuum: Yes, as noted
CO^2: None
Other Gas:
Fire Protection: Wet Sprinkler

Equipment

Type	Count	Status
4' Fume Hood	1	1
Computer	12	3
Drying Oven	1	3
Generic	1	
Incubator	1	3
Refrigerator/Freezer	1	3
Snorkel Exhaust	1	1

Furniture

Type	Count	Status
Chair	24	3
Movable Markerboard	6	3

Status Key: **1** = Furnished and Installed by Contractor (CFCI), **2** = Furnished by Owner, Contractor Installed (OFCI), **3** = Furnished and Installed by Owner (OFOI), **4** = Provided Outside of Project Budget

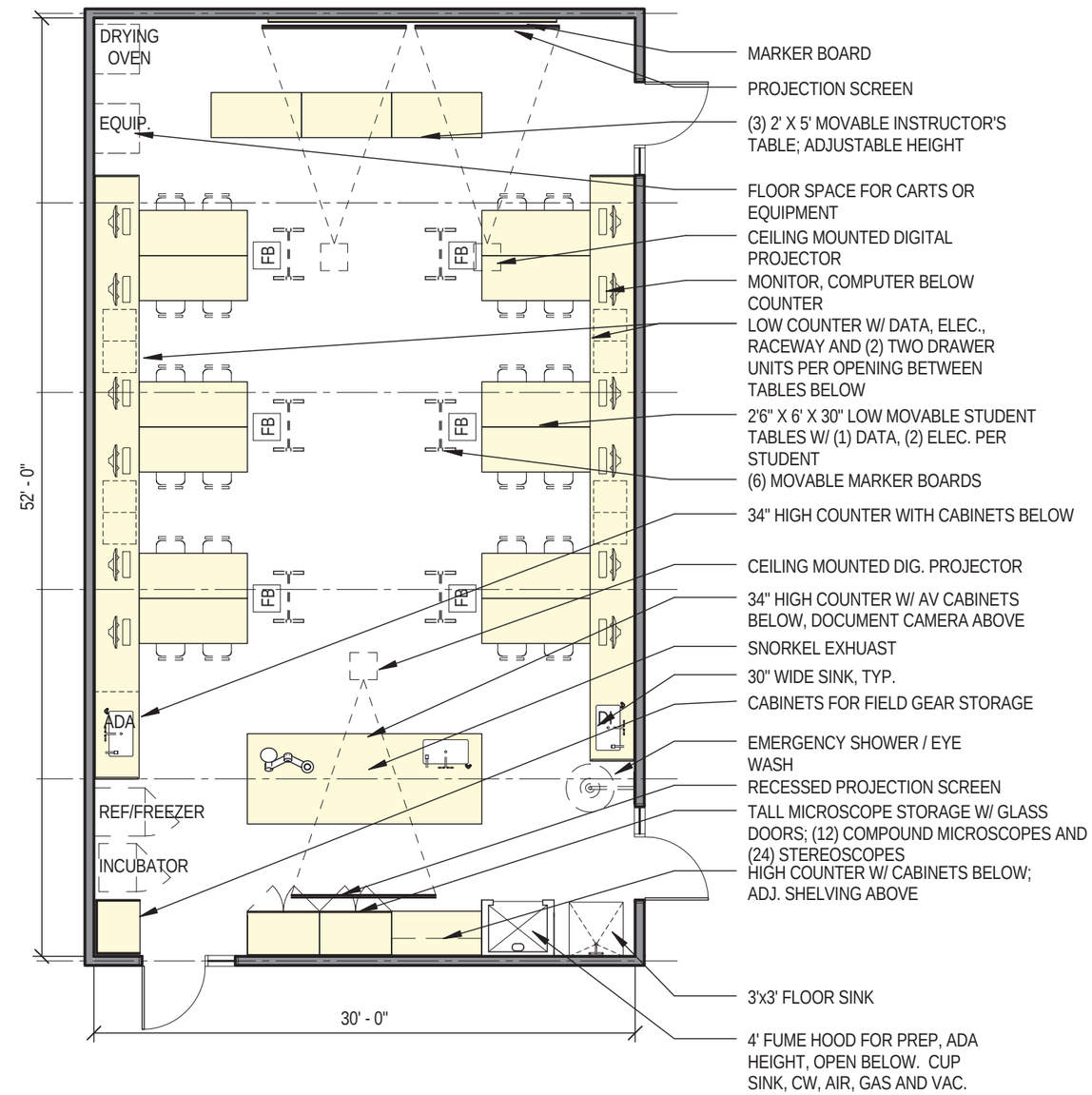

NOTES:
AQUARIA TO BE MOVED FROM ADV. PHYSIOLOGY TEACHING LAB AS REQUIRED.
LOCATE SOME MARKERBOARDS IN ADJACENT DRY LABS - CAN BE MOVED INTO ECOLOGY OR CELL / MOL. BIO / GENETICS

Scale: 1/8" = 1'-0"

CRSA PAYETTE

6.1.12 Hydrology Teaching Lab

Room Data Sheet Detail

Department: CNR
Issue Date: WORK IN PROGRESS
Room No:

Space Information

Room Function: *Undergraduate teaching laboratory*
Adjacencies: *See Adjacency Diagrams*
Access: *Students, Faculty*
Room Utilization *7:00AM to 6:30PM*
General Notes:

Special Requirements

Lighting Controls: *See Proj. Standards, Ch. 3*
Acoustic Req: *See acoustics narrative, Ch. 4*
Structural Req: *None*
Security: *Locked*
Other Spec Req:

Room Size and Capacity

Proposed Area: *1660 SF*
Total Area: *1664 SF*
Room Quantity: *1*
Assigned Cap: *0*
Unassigned Cap: *25*
Total Cap: *25*

Finishes, Doors and Windows

Floor: *Seamless resilient sheet*
Base: *Resilient, Cove*
Walls: *Gyp. Bd.*
Wall Finish: *Paint*
Ceiling: *ACT (2'x2')*
Ceiling Height: *Min. 10'-0", 12'-0" prefered*
Door Size: *3'-6" single leaf*
Door Type: *Wood*
Door Vis Panel: *Yes*
Window Treat: *Light-filtering*
Window Skylight: *None*

Casework and Built-ins

Wall Cabinets: *Wood*
Base Cabinets: *Wood*
Counter Tops: *Epoxy resin*
Counter (LF): *See diagram*
Counter Height: *36" UON*
Shelving (LF): *Yes*
Drawer Units: *Yes*
White Boards: *Yes, as noted*
Tack Boards *None*
Proj. Screen: *Yes, as noted*

Communications

See Project Design Standards in Chapter 3 and electrical/telecomm narrative in Chapter 4

HVAC

Air Changes: *Teaching Lab Standard*
Air Circulation: *Teaching Lab Standard*
Pressure: *Negative to corridor*
Temperature: *Teaching Lab Standard*
Rel. Humidity: *Teaching Lab Standard*
Local Exhaust: *As noted*
Air Filtration: *Teaching Lab Standard*
CO2 Sensor: *Teaching Lab Standard*
Distribution: *Teaching Lab Standard*
Other HVAC:

Electrical

See Project Design Standards in Chapter 3 and electrical/telecomm narrative in Chapter 4

Plumbing

Sinks: *Epoxy resin, grey*
Pure Water: *Only as indicated*
Hot/Cold Water: *Yes*
Hose Bibb: *None*
Floor Drain: *None*
Waste: *Lab Waste*
Emer. Eyewash: *None*
Emer. Station: *None*
Gases:
Comp. Air: *Yes, as noted*
Lab Gas: *Yes, as noted*
Vacuum: *Yes, as noted*
CO^2: *None*
Other Gas:
Fire Protection: *Wet Sprinkler*

Equipment

Type	Count	Status
Computer	24	3
Oil Storage Barrel	30	3
Rotop Sieve Shaker	1	3

Furniture

Type	Count	Status
Chair	24	3

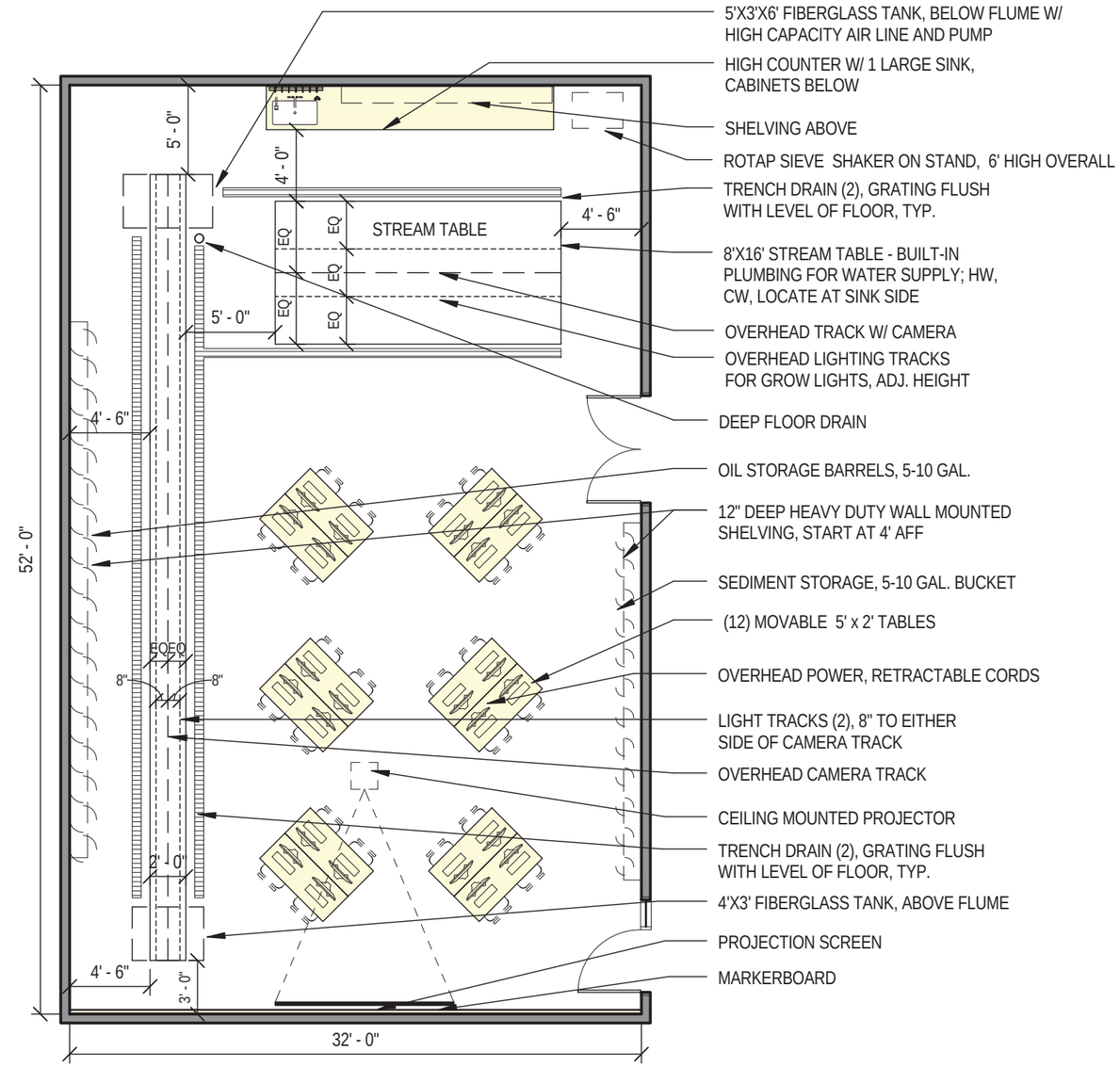

Status Key: **1** = Furnished and Installed by Contractor (CFCI), **2** = Furnished by Owner, Contractor Installed (OFCI), **3** = Furnished and Installed by Owner (OFOI), **4** = Provided Outside of Project Budget

Scale: 1/8" = 1'-0"

CRSA PAYETTE

6.1.13 GIS Teaching Lab - OPT A

Room Data Sheet Detail

Department: CNR
Issue Date: WORK IN PROGRESS
Room No:

Space Information

Room Function: Undergraduate teaching laboratory
Adjacencies: See Adjacency Diagrams
Access: Students, Faculty
Room Utilization 7:00AM to 6:30PM
General Notes:

Special Requirements

Lighting Controls: See Proj. Standards, Ch. 3
Acoustic Req: See acoustics narrative, Ch. 4
Structural Req: None
Security: Locked
Other Spec Req:

Room Size and Capacity

Proposed Area: 2400 SF
Total Area: 2400 SF
Room Quantity: 1
Assigned Cap: 0
Unassigned Cap: 25
Total Cap: 25

Finishes, Doors and Windows

Floor: Carpet Tile
Base: Resilient, Cove
Walls: Gyp. Bd.
Wall Finish: Paint
Ceiling: ACT (2'x2')
Ceiling Height:

Door Size: 3'-6" single leaf
Door Type: Wood
Door Vis Panel: Yes
Window Treat: Light-filtering
Window Skylight: None

Casework and Built-ins

Wall Cabinets: Wood
Base Cabinets: Wood
Counter Tops: Epoxy Resin
Counter (LF): See diagram
Counter Height: 36" UON

Shelving (LF): None
Drawer Units: Yes
White Boards: Yes, as noted
Tack Boards None
Proj. Screen: Yes, as noted

Communications

See Project Design Standards in Chapter 3 and electrical/telecomm narrative in Chapter 4

HVAC

Air Changes: Teaching Lab Standard
Air Circulation: Teaching Lab Standard
Pressure: Negative to corridor
Temperature: Teaching Lab Standard
Rel. Humidity: Teaching Lab Standard
Local Exhaust: As noted
Air Filtration: Teaching Lab Standard
CO2 Sensor: Teaching Lab Standard
Distribution: Teaching Lab Standard
Other HVAC:

Electrical

See Project Design Standards in Chapter 3 and electrical/telecomm narrative in Chapter 4

Plumbing

Sinks: None
Pure Water: None
Hot/Cold Water: None
Hose Bibb: None
Floor Drain: None
Waste: None
Emer. Eyewash: None
Emer. Station: None
Gases:
Comp. Air: None
Lab Gas: None
Vacuum: None
CO^2: None
Other Gas:
Fire Protection: Wet Sprinkler

Equipment

Type	Count	Status
Computer	64	3

Furniture

Type	Count	Status
24"x60" Table	2	3
32"x78" Table w/ Descending Monitor Arm	32	3
Chair	64	3

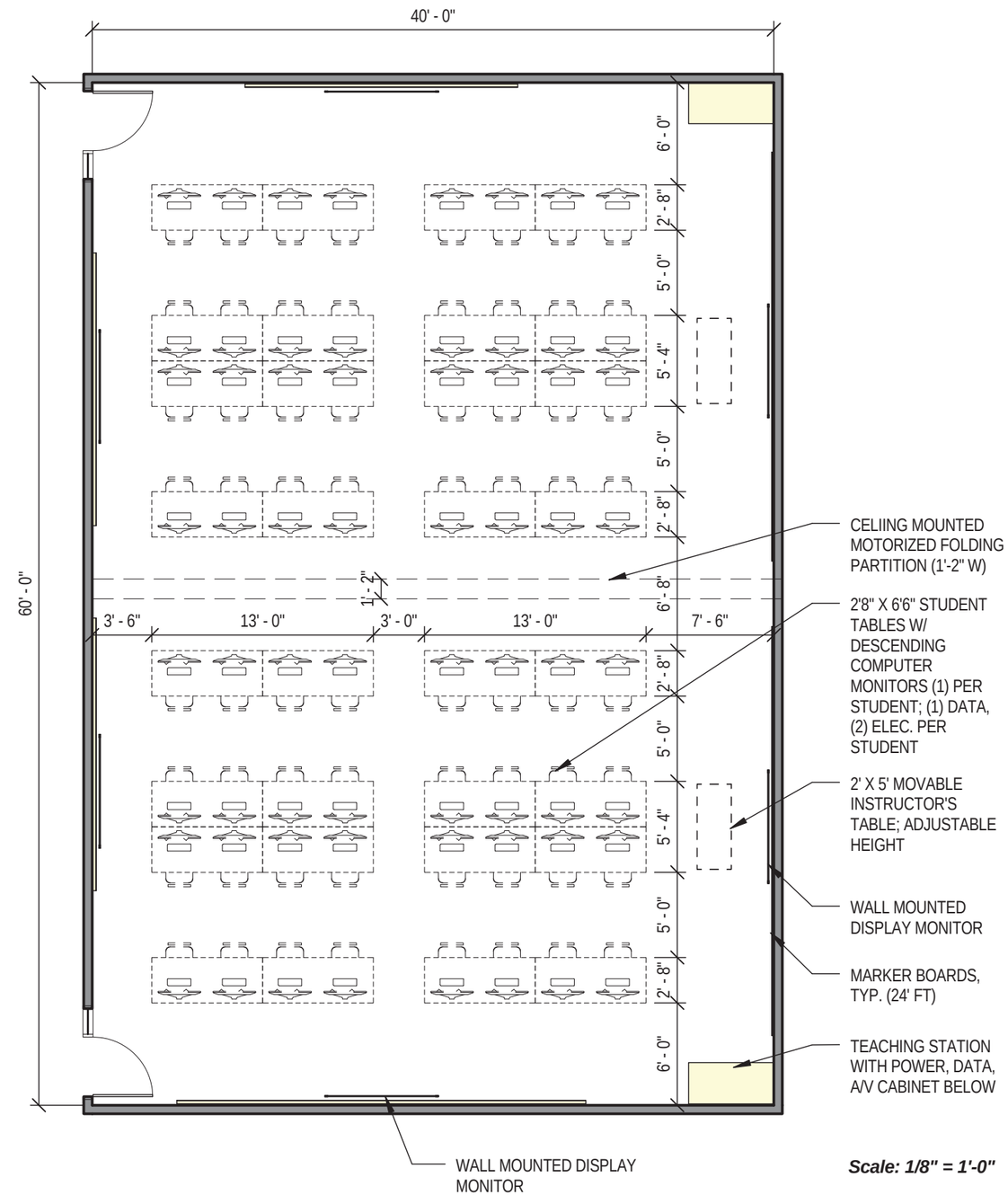

Scale: 1/8" = 1'-0"

Status Key: **1** = Furnished and Installed by Contractor (CFCI), **2** = Furnished by Owner, Contractor Installed (OFCI), **3** = Furnished and Installed by Owner (OFOI), **4** = Provided Outside of Project Budget

CRSA PAYETTE

6.1.13 GIS Teaching Lab - OPT B

Room Data Sheet Detail

Department: CNR
Issue Date: WORK IN PROGRESS
Room No:

Space Information

Room Function: Undergraduate teaching laboratory
Adjacencies: See Adjacency Diagrams
Access: Students, Faculty
Room Utilization 7:00AM to 6:30PM
General Notes:

Special Requirements

Lighting Controls: See Proj. Standards, Ch. 3
Acoustic Req: See acoustics narrative, Ch. 4
Structural Req: None
Security: Locked
Other Spec Req:

Room Size and Capacity

Proposed Area: 2400 SF
Total Area: 2400 SF
Room Quantity: 1
Assigned Cap: 0
Unassigned Cap: 25
Total Cap: 25

Finishes, Doors and Windows

Floor: Carpet Tile
Base: Resilient, Cove
Walls: Gyp. Bd.
Wall Finish: Paint
Ceiling: ACT (2'x2')
Ceiling Height:

Door Size: 3'-6" single leaf
Door Type: Wood
Door Vis Panel: Yes
Window Treat: Light-filtering
Window Skylight: None

Casework and Built-ins

Wall Cabinets: Wood
Base Cabinets: Wood
Counter Tops: Epoxy Resin
Counter (LF): See diagram
Counter Height: 36" UON

Shelving (LF): None
Drawer Units: Yes
White Boards: Yes, as noted
Tack Boards None
Proj. Screen: Yes, as noted

Communications

See Project Design Standards in Chapter 3 and electrical/telecomm narrative in Chapter 4

HVAC

Air Changes: Teaching Lab Standard
Air Circulation: Teaching Lab Standard
Pressure: Negative to corridor
Temperature: Teaching Lab Standard
Rel. Humidity: Teaching Lab Standard
Local Exhaust: As noted
Air Filtration: Teaching Lab Standard
CO2 Sensor: Teaching Lab Standard
Distribution: Teaching Lab Standard
Other HVAC:

Electrical

See Project Design Standards in Chapter 3 and electrical/telecomm narrative in Chapter 4

Plumbing

Sinks: None
Pure Water: None
Hot/Cold Water: None
Hose Bibb: None
Floor Drain: None
Waste: None
Emer. Eyewash: None
Emer. Station: None
Gases:
Comp. Air: None
Lab Gas: None
Vacuum: None
CO^2: None
Other Gas:
Fire Protection: Wet Sprinkler

Equipment

Type	Count	Status

Furniture

Type	Count	Status
24"x60" Table	2	3
Mediascape Table w/ Monitor	10	3
Task Chair	60	3

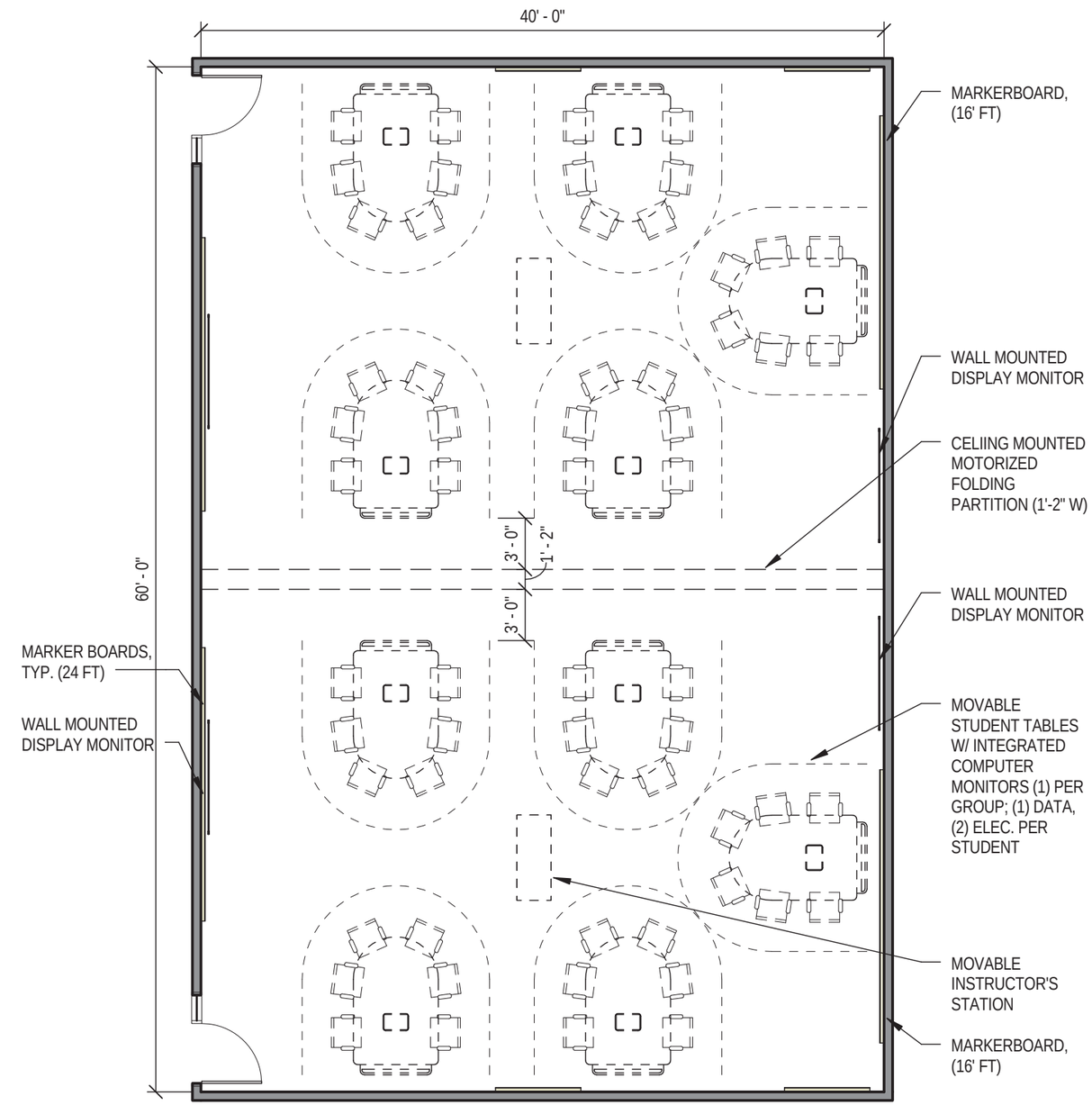

Scale: 1/8" = 1'-0"

Status Key: **1** = Furnished and Installed by Contractor (CFCI), **2** = Furnished by Owner, Contractor Installed (OFCI), **3** = Furnished and Installed by Owner (OFOI), **4** = Provided Outside of Project Budget

CRSA PAYETTE

6.2.1 General Bio Lab Prep

Room Data Sheet Detail

Department: Biology
Issue Date: WORK IN PROGRESS
Room No:

Space Information

Room Function: Teaching labratory support
Adjacencies: See Adjacency Diagrams
Access: Faculty
Room Utilization 7:00AM to 6:30PM
General Notes:

Special Requirements

Lighting Controls: See Proj. Standards, Ch. 3
Acoustic Req: See acoustics narrative, Ch. 4
Structural Req: None
Security: Locked
Other Spec Req:

Room Size and Capacity

Proposed Area: 930 SF
Total Area: 930 SF
Room Quantity: 1
Assigned Cap: 0
Unassigned Cap: 2
Total Cap: 2

Finishes, Doors and Windows

Floor: Resilient Tile
Base: Resilient, Cove
Walls: Gyp. Bd.
Wall Finish: Paint
Ceiling: ACT (2'x2')
Ceiling Height:

Door Size: 3'-6" single leaf
Door Type: Wood
Door Vis Panel: Yes
Window Treat: Light-filtering
Window Skylight: None

Casework and Built-ins

Wall Cabinets: Wood
Base Cabinets: Wood
Counter Tops: Epoxy Resin
Counter (LF): See diagram
Counter Height: 36" UON

Shelving (LF): Yes
Drawer Units: Yes
White Boards: None
Tack Boards None
Proj. Screen: None

Communications

See Project Design Standards in Chapter 3 and electrical/telecomm narrative in Chapter 4

HVAC

Air Changes: Teach. Support Standard
Air Circulation: Teach. Support Standard
Pressure: Negative to corridor
Temperature: Teach. Support Standard
Rel. Humidity: Teach. Support Standard
Local Exhaust: As noted
Air Filtration: Teach. Support Standard
CO2 Sensor: Teach. Support Standard
Distribution: Teach. Support Standard
Other HVAC:

Electrical

See Project Design Standards in Chapter 3 and electrical/telecomm narrative in Chapter 4

Plumbing

Sinks: Epoxy resin, grey
Pure Water: Only as indicated
Hot/Cold Water: Yes
Hose Bibb: None
Floor Drain: At all emergency showers
Waste: Lab Waste
Emer. Eyewash: Yes
Emer. Station: Yes
Gases:
Comp. Air: Yes, as noted
Lab Gas: Yes, as noted
Vacuum: Yes, as noted
CO^2: None
Other Gas:
Fire Protection: Wet Sprinkler

Equipment

Type	Count	Status
5' Fume Hood	1	1
32"x32" Refrigerator	2	3
Autoclave AMSCO 450 LS	1	1
Cart	3	3
Dishwasher	1	1
Growth Chamber	1	3

Furniture

Type	Count	Status

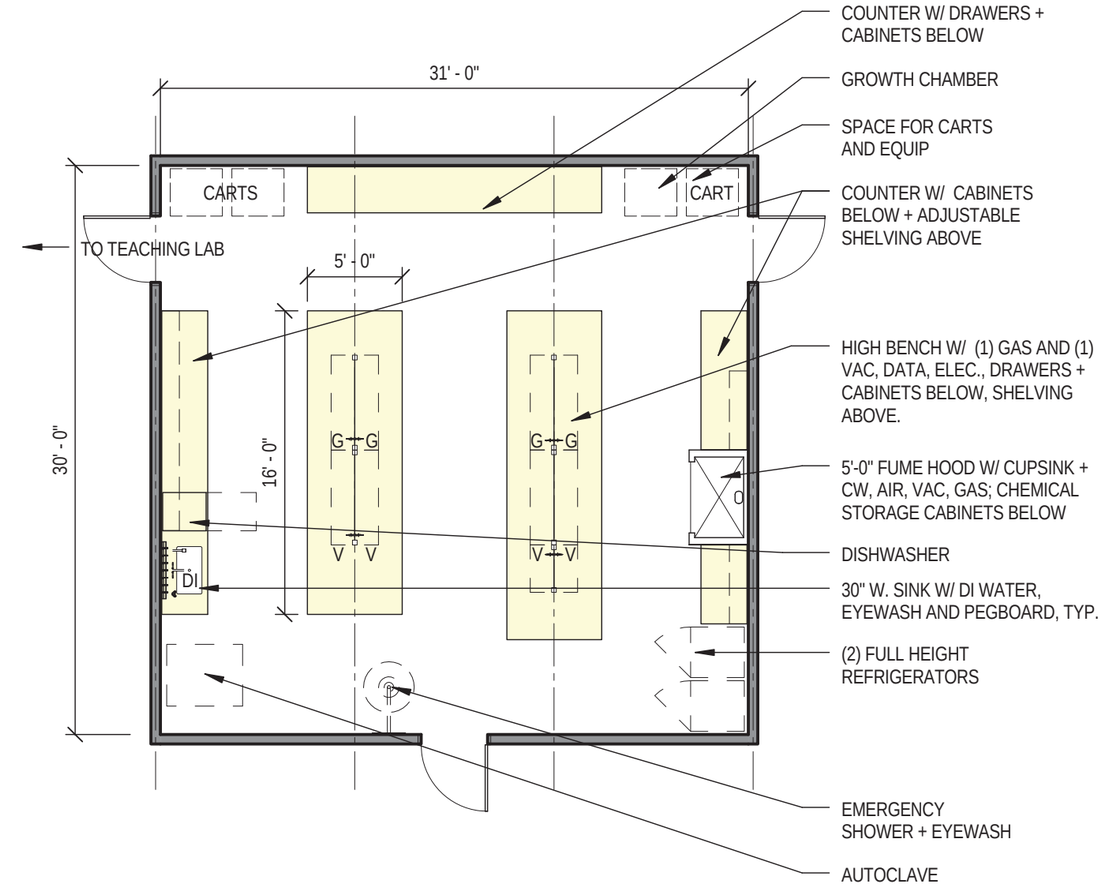

NOTES:
- COAT + BACKPACK STORAGE IN SEPARATE ALCOVE

Status Key: **1** = Furnished and Installed by Contractor (CFCI), **2** = Furnished by Owner, Contractor Installed (OFCI), **3** = Furnished and Installed by Owner (OFOI), **4** = Provided Outside of Project Budget

Scale: 1/8" = 1'-0"

CRSA PAYETTE

6.2.2 Microbiology Prep / Media Prep

Room Data Sheet Detail

Department: Biology
Issue Date: WORK IN PROGRESS
Room No:

Space Information

Room Function: Teaching labratory support
Adjacencies: See Adjacency Diagrams
Access: Faculty
Room Utilization 7:00AM to 6:30PM
General Notes:

Special Requirements

Lighting Controls: See Proj. Standards, Ch. 3
Acoustic Req: See acoustics narrative, Ch. 4
Structural Req: None
Security: Locked
Other Spec Req:

Room Size and Capacity

Proposed Area: 615 SF
Total Area: 611 SF
Room Quantity: 1
Assigned Cap: 0
Unassigned Cap: 2
Total Cap: 2

Finishes, Doors and Windows

Floor: Seamless resilient sheet
Base: Resilient, Cove
Walls: Gyp. Bd.
Wall Finish: Paint
Ceiling: ACT (2'x2')
Ceiling Height:

Door Size: 3'-6" single leaf
Door Type: Wood
Door Vis Panel: Yes
Window Treat: Light-filtering
Window Skylight: None

Casework and Built-ins

Wall Cabinets: Wood
Base Cabinets: Wood
Counter Tops: Epoxy Resin
Counter (LF): See diagram
Counter Height: 36" UON

Shelving (LF): Yes
Drawer Units: Yes
White Boards: None
Tack Boards None
Proj. Screen: None

Communications

See Project Design Standards in Chapter 3 and electrical/telecomm narrative in Chapter 4

HVAC

Air Changes: Teach. Support Standard
Air Circulation: Teach. Support Standard
Pressure: Negative to corridor
Temperature: Teach. Support Standard
Rel. Humidity: Teach. Support Standard
Local Exhaust: As noted
Air Filtration: Teach. Support Standard
CO2 Sensor: Teach. Support Standard
Distribution: Teach. Support Standard
Other HVAC:

Electrical

See Project Design Standards in Chapter 3 and electrical/telecomm narrative in Chapter 4

Plumbing

Sinks: Epoxy resin, grey
Pure Water: Only as indicated
Hot/Cold Water: Yes
Hose Bibb: None
Floor Drain: At all emergency showers
Waste: Lab Waste
Emer. Eyewash: Yes
Emer. Station: Yes
Gases:
Comp. Air: Yes, as noted
Lab Gas: Yes, as noted
Vacuum: Yes, as noted
CO^2: None
Other Gas:
Fire Protection: Wet Sprinkler

Equipment

Type	Count	Status
5' Double Door Refrigerator	1	3
5' Fume Hood, no cup sink	1	1
32"x32" Refrigerator	1	3
Autoclave	2	1
Cart	5	3
Computer	2	3
Dishwasher	1	1

Type	Count	Status
Stacking Incubator	1	3
Undercounter Freezer	1	3

Furniture

Type	Count	Status
Task Chair	2	3

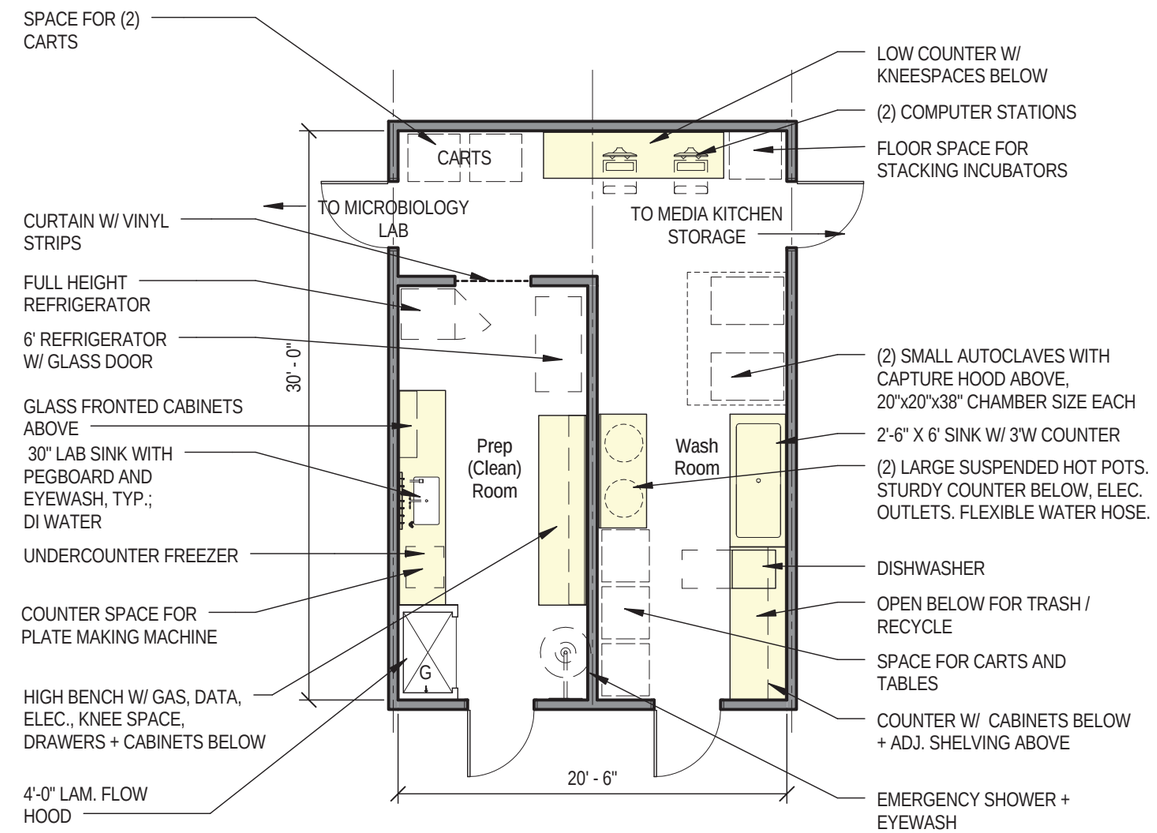

Status Key: **1** = Furnished and Installed by Contractor (CFCI), **2** = Furnished by Owner, Contractor Installed (OFCI), **3** = Furnished and Installed by Owner (OFOI), **4** = Provided Outside of Project Budget

Scale: 1/8" = 1'-0"

CRSA PAYETTE

6.2.3 Microbiology Media Prep Storage

Room Data Sheet Detail

Department: Biology
Issue Date: WORK IN PROGRESS
Room No:

Space Information

Room Function: *Teaching labratory support*
Adjacencies: *See Adjacency Diagrams*
Access: *Faculty*
Room Utilization *7:00AM to 6:30PM*
General Notes:

Special Requirements

Lighting Controls: *See Proj. Standards, Ch. 3*
Acoustic Req: *See acoustics narrative, Ch. 4*
Structural Req: *None*
Security: *Locked*
Other Spec Req:

Room Size and Capacity

Proposed Area: *615 SF*
Total Area: *605 SF*
Room Quantity: *1*
Assigned Cap: *0*
Unassigned Cap: *2*
Total Cap: *2*

Finishes, Doors and Windows

Floor: *Resilient Tile*
Base: *Resilient, Cove*
Walls: *Gyp. Bd.*
Wall Finish: *Paint*
Ceiling: *ACT (2'x2')*
Ceiling Height:

Door Size: *3'-6" single leaf*
Door Type: *Wood*
Door Vis Panel: *None*
Window Treat: *Light-filtering*
Window Skylight: *None*

Casework and Built-ins

Wall Cabinets: *Wood*
Base Cabinets: *Wood*
Counter Tops: *Epoxy Resin*
Counter (LF): *See diagram*
Counter Height: *36" UON*

Shelving (LF): *Yes*
Drawer Units: *Yes*
White Boards: *None*
Tack Boards *None*
Proj. Screen: *None*

Communications

See Project Design Standards in Chapter 3 and electrical/telecomm narrative in Chapter 4

HVAC

Air Changes: *Teach. Support Standard*
Air Circulation: *Teach. Support Standard*
Pressure: *Negative to corridor*
Temperature: *Teach. Support Standard*
Rel. Humidity: *Teach. Support Standard*
Local Exhaust: *As noted*
Air Filtration: *Teach. Support Standard*
CO2 Sensor: *Teach. Support Standard*
Distribution: *Teach. Support Standard*
Other HVAC:

Electrical

See Project Design Standards in Chapter 3 and electrical/telecomm narrative in Chapter 4

Plumbing

Sinks: *None*
Pure Water: *None*
Hot/Cold Water: *None*
Hose Bibb: *None*
Floor Drain: *None*
Waste: *None*
Emer. Eyewash: *None*
Emer. Station: *None*
Gases:
Comp. Air: *None*
Lab Gas: *None*
Vacuum: *None*
CO^2: *None*
Other Gas:
Fire Protection: *Wet Sprinkler*

Equipment

Type	Count	Status
18"D Chemical Storage Cabinet, 36"W	2	3

Furniture

Type	Count	Status
24"D Wire Shelving	13	3

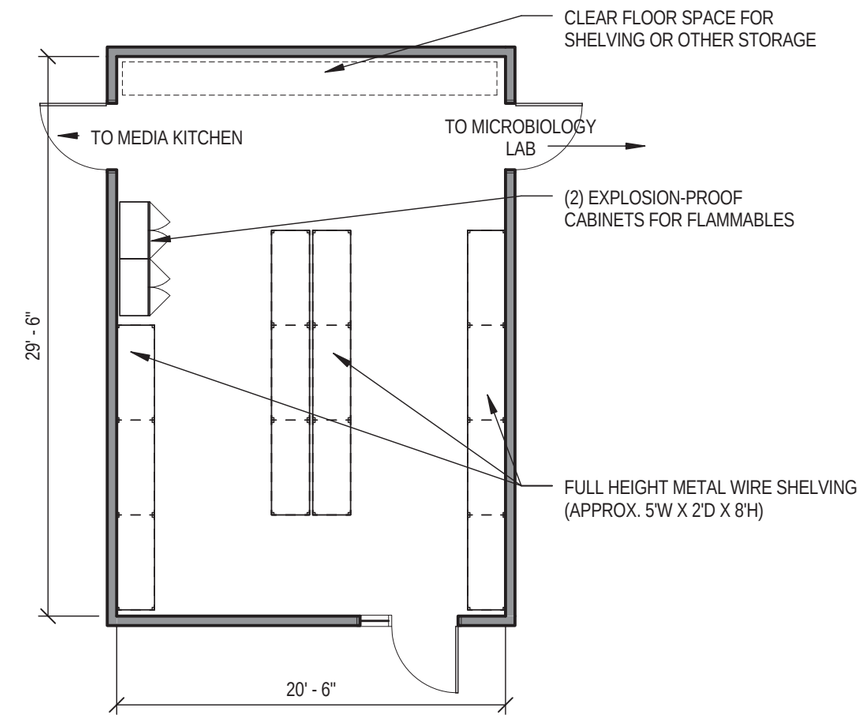

Status Key: **1** = Furnished and Installed by Contractor (CFCI), **2** = Furnished by Owner, Contractor Installed (OFCI), **3** = Furnished and Installed by Owner (OFOI), **4** = Provided Outside of Project Budget

Scale: 1/8" = 1'-0"

CRSA PAYETTE

6.2.4 Microbiology - Cold Room

Room Data Sheet Detail

Department: Biology
Issue Date: WORK IN PROGRESS
Room No:

Space Information

Room Function: Teaching labratory support
Adjacencies: See Adjacency Diagrams
Access: Faculty
Room Utilization 7:00AM to 6:30PM
General Notes:

Special Requirements

Lighting Controls: See Proj. Standards, Ch. 3
Acoustic Req: See acoustics narrative, Ch. 4
Structural Req: None
Security: Locked
Other Spec Req:

Room Size and Capacity

Proposed Area: 100 SF
Total Area: 100 SF
Room Quantity: 1
Assigned Cap: 0
Unassigned Cap: 2
Total Cap: 2

Finishes, Doors and Windows

Floor: Resilient Tile
Base: Resilient, Cove
Walls: Gyp. Bd.
Wall Finish: Paint
Ceiling: ACT (2'x2')
Ceiling Height:

Door Size: 3'-6" single leaf
Door Type: Wood
Door Vis Panel: None
Window Treat: None
Window Skylight: None

Casework and Built-ins

Wall Cabinets: Stainless Steel
Base Cabinets: Stainless Steel
Counter Tops: Stainless Steel
Counter (LF): See diagram
Counter Height: 36" UON

Shelving (LF): Yes
Drawer Units: Yes
White Boards: Yes, as noted
Tack Boards None
Proj. Screen: None

Communications

See Project Design Standards in Chapter 3 and electrical/telecomm narrative in Chapter 4

HVAC

Air Changes: Teach. Support Standard
Air Circulation: Teach. Support Standard
Pressure: Negative to corridor
Temperature: Teach. Support Standard
Rel. Humidity: Teach. Support Standard
Local Exhaust: As noted
Air Filtration: Teach. Support Standard
CO2 Sensor: Teach. Support Standard
Distribution: Teach. Support Standard
Other HVAC:

Electrical

See Project Design Standards in Chapter 3 and electrical/telecomm narrative in Chapter 4

Plumbing

Sinks: None
Pure Water: None
Hot/Cold Water: None
Hose Bibb: None
Floor Drain: None
Waste: None
Emer. Eyewash: None
Emer. Station: None
Gases:
Comp. Air: None
Lab Gas: None
Vacuum: None
CO^2: None
Other Gas:
Fire Protection: Wet Sprinkler

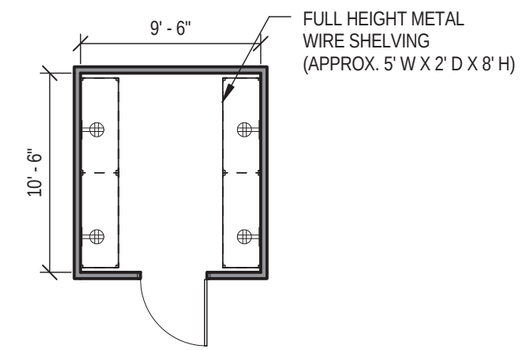

Equipment

Type	Count	Status

Furniture

Type	Count	Status
24"D Wire Shelving	4	3

Status Key: **1** = Furnished and Installed by Contractor (CFCI), **2** = Furnished by Owner, Contractor Installed (OFCI), **3** = Furnished and Installed by Owner (OFOI), **4** = Provided Outside of Project Budget

Scale: 1/8" = 1'-0"

CRSA PAYETTE

6.2.5 Cell / Molecular Biology / Genetics Prep

Room Data Sheet Detail

Department: Biology
Issue Date: WORK IN PROGRESS
Room No:

Space Information

Room Function: Teaching labratory support
Adjacencies: See Adjacency Diagrams
Access: Faculty
Room Utilization 7:00AM to 6:30PM
General Notes:

Special Requirements

Lighting Controls: See Proj. Standards, Ch. 3
Acoustic Req: See acoustics narrative, Ch. 4
Structural Req: None
Security: Locked
Other Spec Req:

Room Size and Capacity

Proposed Area: 300 SF
Total Area: 300 SF
Room Quantity: 1
Assigned Cap: 0
Unassigned Cap: 2
Total Cap: 2

Finishes, Doors and Windows

Floor: Resilient Tile
Base: Resilient, Cove
Walls: Gyp. Bd.
Wall Finish: Paint
Ceiling: ACT (2'x2')
Ceiling Height:

Door Size: 3'-6" single leaf
Door Type: Wood
Door Vis Panel: Yes
Window Treat: Light-filtering
Window Skylight: None

Casework and Built-ins

Wall Cabinets: Wood
Base Cabinets: Wood
Counter Tops: Epoxy Resin
Counter (LF): See diagram
Counter Height: 36" UON

Shelving (LF): Yes
Drawer Units: Yes
White Boards: None
Tack Boards None
Proj. Screen: None

Communications

See Project Design Standards in Chapter 3 and electrical/telecomm narrative in Chapter 4

HVAC

Air Changes: Teach. Support Standard
Air Circulation: Teach. Support Standard
Pressure: Negative to corridor
Temperature: Teach. Support Standard
Rel. Humidity: Teach. Support Standard
Local Exhaust: As noted
Air Filtration: Teach. Support Standard
CO2 Sensor: Teach. Support Standard
Distribution: Teach. Support Standard
Other HVAC:

Electrical

See Project Design Standards in Chapter 3 and electrical/telecomm narrative in Chapter 4

Plumbing

Sinks: Epoxy resin, grey
Pure Water: Only as indicated
Hot/Cold Water: Yes
Hose Bibb: None
Floor Drain: At all emergency showers
Waste: Lab Waste
Emer. Eyewash: Yes
Emer. Station: Yes
Gases:
- *Comp. Air:* Yes, as noted
- *Lab Gas:* Yes, as noted
- *Vacuum:* Yes, as noted
- *CO^2:* None
- *Other Gas:*

Fire Protection: Wet Sprinkler

Equipment

Type	Count	Status
5' Fume Hood	1	1
6' Laminar Flow Hood	1	2
Freezer	1	3
Generic	3	

Furniture

Type	Count	Status

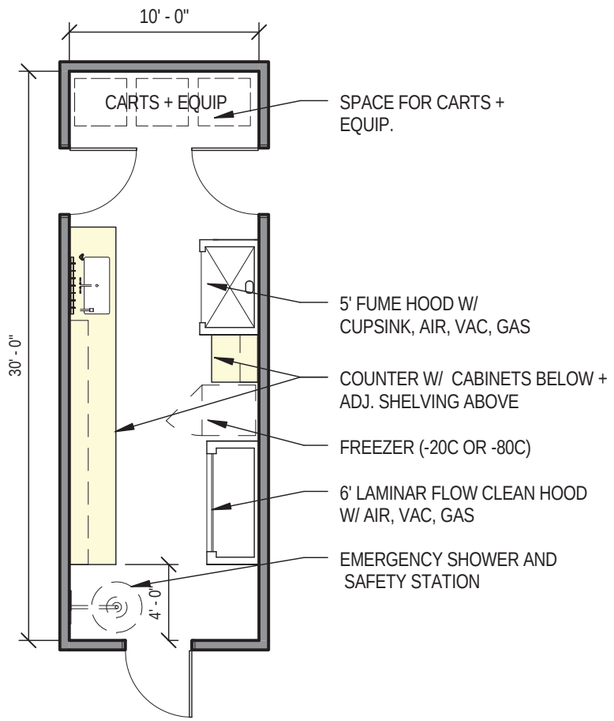

Status Key: **1** = Furnished and Installed by Contractor (CFCI), **2** = Furnished by Owner, Contractor Installed (OFCI), **3** = Furnished and Installed by Owner (OFOI), **4** = Provided Outside of Project Budget

Scale: 1/8" = 1'-0"

CRSA PAYETTE

6.2.6 Human Physiology - Shared Cold Room

Room Data Sheet Detail

Department: Biology
Issue Date: WORK IN PROGRESS
Room No:

Space Information

Room Function: *Teaching labratory support*
Adjacencies: *See Adjacency Diagrams*
Access: *Faculty*
Room Utilization *7:00AM to 6:30PM*
General Notes:

Special Requirements

Lighting Controls: *See Proj. Standards, Ch. 3*
Acoustic Req: *See acoustics narrative, Ch. 4*
Structural Req: *None*
Security: *Locked*
Other Spec Req:

Room Size and Capacity

Proposed Area: *100 SF*
Total Area: *100 SF*
Room Quantity: *1*
Assigned Cap: *0*
Unassigned Cap: *2*
Total Cap: *2*

Finishes, Doors and Windows

Floor: *Resilient sheet*
Base: *Resilient, Cove*
Walls: *Gyp. Bd.*
Wall Finish: *Paint*
Ceiling: *ACT (2'x2')*
Ceiling Height:

Door Size: *3'-6" single leaf*
Door Type: *Wood*
Door Vis Panel: *None*
Window Treat: *None*
Window Skylight: *None*

Casework and Built-ins

Wall Cabinets: *Stainless Steel*
Base Cabinets: *Stainless Steel*
Counter Tops: *Stainless Steel*
Counter (LF): *See diagram*
Counter Height: *36" UON*

Shelving (LF): *Yes*
Drawer Units: *Yes*
White Boards: *Yes, as noted*
Tack Boards *None*
Proj. Screen: *None*

Communications

See Project Design Standards in Chapter 3 and electrical/telecomm narrative in Chapter 4

HVAC

Air Changes: *Teach. Support Standard*
Air Circulation: *Teach. Support Standard*
Pressure: *Negative to corridor*
Temperature: *Teach. Support Standard*
Rel. Humidity: *Teach. Support Standard*
Local Exhaust: *As noted*
Air Filtration: *Teach. Support Standard*
CO2 Sensor: *Teach. Support Standard*
Distribution: *Teach. Support Standard*
Other HVAC:

Electrical

See Project Design Standards in Chapter 3 and electrical/telecomm narrative in Chapter 4

Plumbing

Sinks: *None*
Pure Water: *None*
Hot/Cold Water: *None*
Hose Bibb: *None*
Floor Drain: *None*
Waste: *None*
Emer. Eyewash: *None*
Emer. Station: *None*
Gases:
Comp. Air: *None*
Lab Gas: *None*
Vacuum: *None*
CO^2: *None*
Other Gas:
Fire Protection: *Wet Sprinkler*

Equipment

Type	Count	Status

Furniture

Type	Count	Status
24"D Wire Shelving	4	3

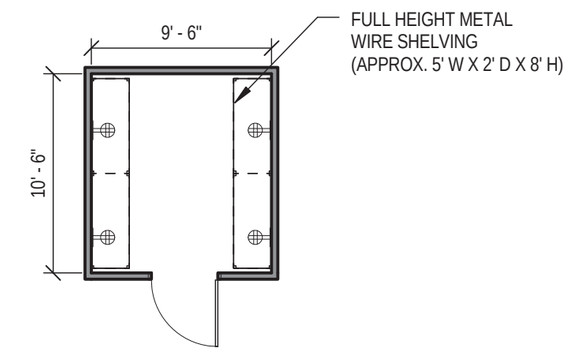

Status Key: **1** = Furnished and Installed by Contractor (CFCI), **2** = Furnished by Owner, Contractor Installed (OFCI), **3** = Furnished and Installed by Owner (OFOI), **4** = Provided Outside of Project Budget

Scale: 1/8" = 1'-0"

CRSA PAYETTE

6.2.7 Specimen Storage - Plant / Insect

Room Data Sheet Detail

Department: Biology
Issue Date: WORK IN PROGRESS
Room No:

Space Information

Room Function: *Teaching labratory support*
Adjacencies: *See Adjacency Diagrams*
Access: *Faculty*
Room Utilization *7:00AM to 6:30PM*
General Notes:

Special Requirements

Lighting Controls: *See Proj. Standards, Ch. 3*
Acoustic Req: *See acoustics narrative, Ch. 4*
Structural Req: *None*
Security: *Locked*
Other Spec Req:

Room Size and Capacity

Proposed Area: *300 SF*
Total Area: *300 SF*
Room Quantity: *1*
Assigned Cap: *0*
Unassigned Cap: *2*
Total Cap: *2*

Finishes, Doors and Windows

Floor: *Resilient Tile*
Base: *Resilient, Cove*
Walls: *Gyp. Bd.*
Wall Finish: *Paint*
Ceiling: *ACT (2'x2')*
Ceiling Height:

Door Size: *3'-6" single leaf*
Door Type: *Wood*
Door Vis Panel: *Yes*
Window Treat: *Light-filtering*
Window Skylight: *None*

Casework and Built-ins

Wall Cabinets: *Wood*
Base Cabinets: *Wood*
Counter Tops: *Epoxy Resin*
Counter (LF): *See diagram*
Counter Height: *36" UON*

Shelving (LF): *Yes*
Drawer Units: *Yes*
White Boards: *None*
Tack Boards *None*
Proj. Screen: *None*

Communications

See Project Design Standards in Chapter 3 and electrical/telecomm narrative in Chapter 4

HVAC

Air Changes: *Teach. Support Standard*
Air Circulation: *Teach. Support Standard*
Pressure: *Negative to corridor*
Temperature: *Teach. Support Standard*
Rel. Humidity: *Teach. Support Standard*
Local Exhaust: *As noted*
Air Filtration: *Teach. Support Standard*
CO2 Sensor: *Teach. Support Standard*
Distribution: *Teach. Support Standard*
Other HVAC:

Electrical

See Project Design Standards in Chapter 3 and electrical/telecomm narrative in Chapter 4

Plumbing

Sinks: *Epoxy resin, grey*
Pure Water: *Only as indicated*
Hot/Cold Water: *Yes*
Hose Bibb: *None*
Floor Drain: *None*
Waste: *Lab Waste*
Emer. Eyewash: *None*
Emer. Station: *None*
Gases:
Comp. Air: *None*
Lab Gas: *None*
Vacuum: *None*
CO^2: *None*
Other Gas:
Fire Protection: *Wet Sprinkler*

Equipment

Type	Count	Status
Generic	3	

Furniture

Type	Count	Status

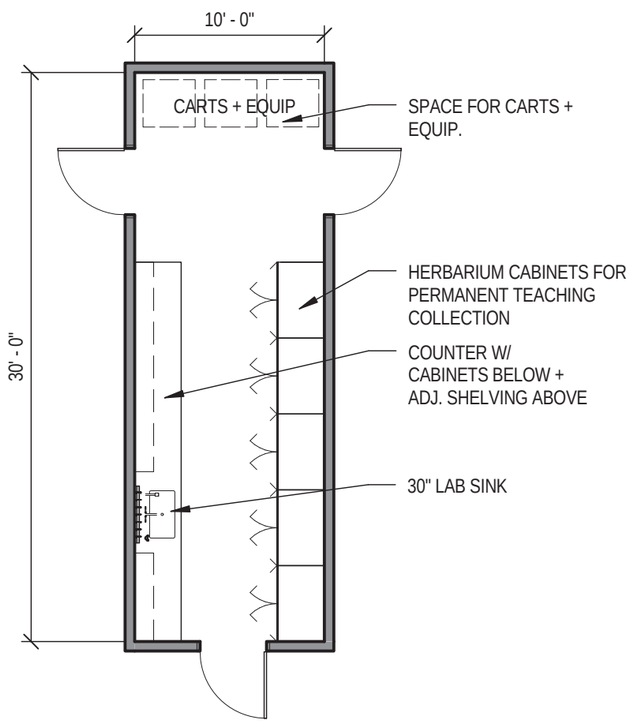

Status Key: **1** = Furnished and Installed by Contractor (CFCI), **2** = Furnished by Owner, Contractor Installed (OFCI), **3** = Furnished and Installed by Owner (OFOI), **4** = Provided Outside of Project Budget

Scale: 1/8" = 1'-0"

CRSA PAYETTE

6.2.8 Field Equipment Storage (Teaching)

Room Data Sheet Detail

Department: Biology
Issue Date: WORK IN PROGRESS
Room No:

Space Information

Room Function: Teaching labratory support
Adjacencies: See Adjacency Diagrams
Access: Faculty
Room Utilization 7:00AM to 6:30PM
General Notes:

Special Requirements

Lighting Controls: See Proj. Standards, Ch. 3
Acoustic Req: See acoustics narrative, Ch. 4
Structural Req: None
Security: Locked
Other Spec Req:

Room Size and Capacity

Proposed Area: 150 SF
Total Area: 150 SF
Room Quantity: 1
Assigned Cap: 0
Unassigned Cap: 2
Total Cap: 2

Finishes, Doors and Windows

Floor: Sealed Concrete
Base: Resilient, Cove
Walls: Gyp. Bd.
Wall Finish: Paint
Ceiling: ACT (2'x2')
Ceiling Height:

Door Size: 3'-6" single leaf
Door Type: Wood
Door Vis Panel: None
Window Treat: Light-filtering
Window Skylight: None

Casework and Built-ins

Wall Cabinets: Wood
Base Cabinets: Wood
Counter Tops: Epoxy Resin
Counter (LF): See diagram
Counter Height: 36" UON

Shelving (LF): Yes
Drawer Units: Yes
White Boards: None
Tack Boards None
Proj. Screen: None

Communications

See Project Design Standards in Chapter 3 and electrical/telecomm narrative in Chapter 4

HVAC

Air Changes: Teach. Support Standard
Air Circulation: Teach. Support Standard
Pressure: Negative to corridor
Temperature: Teach. Support Standard
Rel. Humidity: Teach. Support Standard
Local Exhaust: As noted
Air Filtration: Teach. Support Standard
CO2 Sensor: Teach. Support Standard
Distribution: Teach. Support Standard
Other HVAC:

Electrical

See Project Design Standards in Chapter 3 and electrical/telecomm narrative in Chapter 4

Plumbing

Sinks: Floor sink
Pure Water: None
Hot/Cold Water: Yes
Hose Bibb: None
Floor Drain: As noted
Waste: General
Emer. Eyewash: None
Emer. Station: None
Gases:
- Comp. Air: None
- Lab Gas: None
- Vacuum: None
- CO^2: None
- Other Gas:

Fire Protection: Wet Sprinkler

Equipment

Type	Count	Status

Furniture

Type	Count	Status
24"D Wire Shelving	4	3

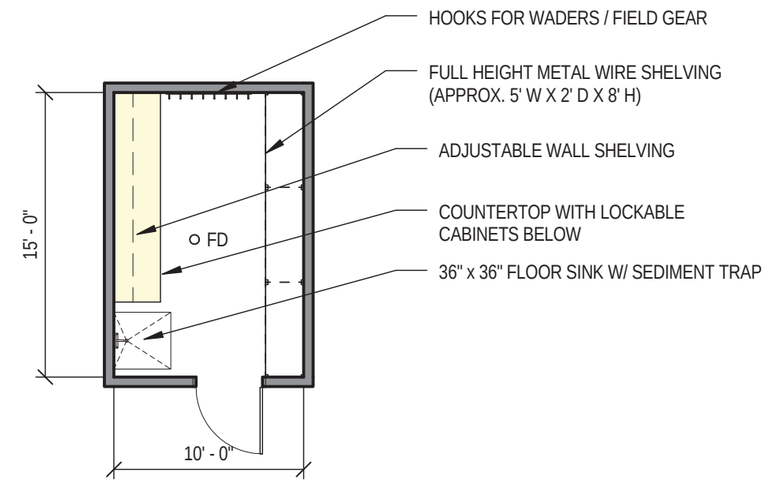

Status Key: **1** = Furnished and Installed by Contractor (CFCI), **2** = Furnished by Owner, Contractor Installed (OFCI), **3** = Furnished and Installed by Owner (OFOI), **4** = Provided Outside of Project Budget

Scale: 1/8" = 1'-0"

CRSA PAYETTE

6.2.9 General Equipment Storage

Room Data Sheet Detail

Department: Biology
Issue Date: WORK IN PROGRESS
Room No:

Space Information

Room Function: *Teaching labratory support*
Adjacencies: *See Adjacency Diagrams*
Access: *Faculty*
Room Utilization *7:00AM to 6:30PM*
General Notes:

Special Requirements

Lighting Controls: *See Proj. Standards, Ch. 3*
Acoustic Req: *See acoustics narrative, Ch. 4*
Structural Req: *None*
Security: *Locked*
Other Spec Req:

Room Size and Capacity

Proposed Area: *300 SF*
Total Area: *300 SF*
Room Quantity: *1*
Assigned Cap: *0*
Unassigned Cap: *2*
Total Cap: *2*

Finishes, Doors and Windows

Floor: *Sealed Concrete*
Base: *Resilient, Cove*
Walls: *Gyp. Bd.*
Wall Finish: *Paint*
Ceiling: *ACT (2'x2')*
Ceiling Height:

Door Size: *3'-6" single leaf*
Door Type: *Hollow metal, painted*
Door Vis Panel: *None*
Window Treat: *None*
Window Skylight: *None*

Casework and Built-ins

Wall Cabinets: *Stainless Steel*
Base Cabinets: *Stainless Steel*
Counter Tops: *Stainless Steel*
Counter (LF): *See diagram*
Counter Height: *36" UON*

Shelving (LF): *Yes*
Drawer Units: *Yes*
White Boards: *Yes, as noted*
Tack Boards *None*
Proj. Screen: *None*

Communications

See Project Design Standards in Chapter 3 and electrical/telecomm narrative in Chapter 4

HVAC

Air Changes: *Storage Space Standard*
Air Circulation: *Storage Space Standard*
Pressure: *Negative to corridor*
Temperature: *Storage Space Standard*
Rel. Humidity: *Storage Space Standard*
Local Exhaust: *As noted*
Air Filtration: *Storage Space Standard*
CO2 Sensor: *Storage Space Standard*
Distribution: *Storage Space Standard*
Other HVAC:

Electrical

See Project Design Standards in Chapter 3 and electrical/telecomm narrative in Chapter 4

Plumbing

Sinks: *None*
Pure Water: *None*
Hot/Cold Water: *None*
Hose Bibb: *None*
Floor Drain: *None*
Waste: *None*
Emer. Eyewash: *None*
Emer. Station: *None*
Gases:
Comp. Air: *None*
Lab Gas: *None*
Vacuum: *None*
CO^2: *None*
Other Gas:
Fire Protection: *Wet Sprinkler*

Equipment

Type	Count	Status

Furniture

Type	Count	Status
24"D Wire Shelving	3	3

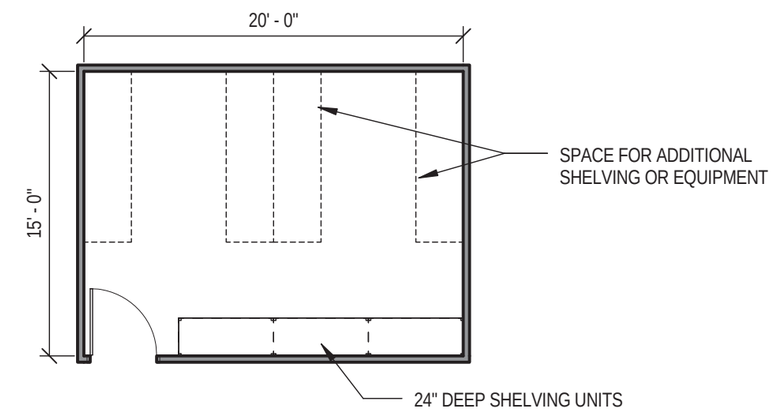

Status Key: **1** = Furnished and Installed by Contractor (CFCI), **2** = Furnished by Owner, Contractor Installed (OFCI), **3** = Furnished and Installed by Owner (OFOI), **4** = Provided Outside of Project Budget

Scale: 1/8" = 1'-0"

CRSA PAYETTE

6.3.1 Dry Lab (24 student)

Room Data Sheet Detail

Department: Biology
Issue Date: WORK IN PROGRESS
Room No:

Space Information

Room Function: *Undergraduate teaching laboratory*
Adjacencies: *See Adjacency Diagrams*
Access: *Students, Faculty*
Room Utilization *7:00AM to 6:30PM*
General Notes:
Shared with Ecology Lab

Special Requirements

Lighting Controls: *See Proj. Standards, Ch. 3*
Acoustic Req: *See acoustics narrative, Ch. 4*
Structural Req: *None*
Security: *Locked*
Other Spec Req:

Room Size and Capacity

Proposed Area: *720 SF*
Total Area: *720 SF*
Room Quantity: *2*
Assigned Cap: *0*
Unassigned Cap: *25*
Total Cap: *25*

Finishes, Doors and Windows

Floor: *Carpet Tile*
Base: *Resilient, Cove*
Walls: *Gyp. Bd.*
Wall Finish: *Paint*
Ceiling: *ACT (2'x2')*
Ceiling Height: *Varies*

Door Size: *3'-6" single leaf*
Door Type: *Wood*
Door Vis Panel: *Yes*
Window Treat: *Light-filtering*
Window Skylight: *None*

Casework and Built-ins

Wall Cabinets: *Wood*
Base Cabinets: *Wood*
Counter Tops: *Epoxy resin*
Counter (LF): *See diagram*
Counter Height: *36" UON*

Shelving (LF): *Yes*
Drawer Units: *Yes*
White Boards: *None*
Tack Boards *None*
Proj. Screen: *Yes, as noted*

Communications

See Project Design Standards in Chapter 3 and electrical/telecomm narrative in Chapter 4

HVAC

Air Changes: *Teach. Support Standard*
Air Circulation: *Teach. Support Standard*
Pressure: *Negative to corridor*
Temperature: *Teach. Support Standard*
Rel. Humidity: *Teach. Support Standard*
Local Exhaust: *As noted*
Air Filtration: *Teach. Support Standard*
CO2 Sensor: *Teach. Support Standard*
Distribution: *Teach. Support Standard*
Other HVAC:

Electrical

See Project Design Standards in Chapter 3 and electrical/telecomm narrative in Chapter 4

Plumbing

Sinks: *None*
Pure Water: *None*
Hot/Cold Water: *None*
Hose Bibb: *None*
Floor Drain: *None*
Waste: *None*
Emer. Eyewash: *None*
Emer. Station: *None*
Gases:
Comp. Air: *None*
Lab Gas: *None*
Vacuum: *None*
CO^2: *None*
Other Gas:
Fire Protection: *Wet Sprinkler*

Equipment

Type	Count	Status

Furniture

Type	Count	Status
24"x60" Table	12	3
30"x60" Table	2	3
Chair	24	3

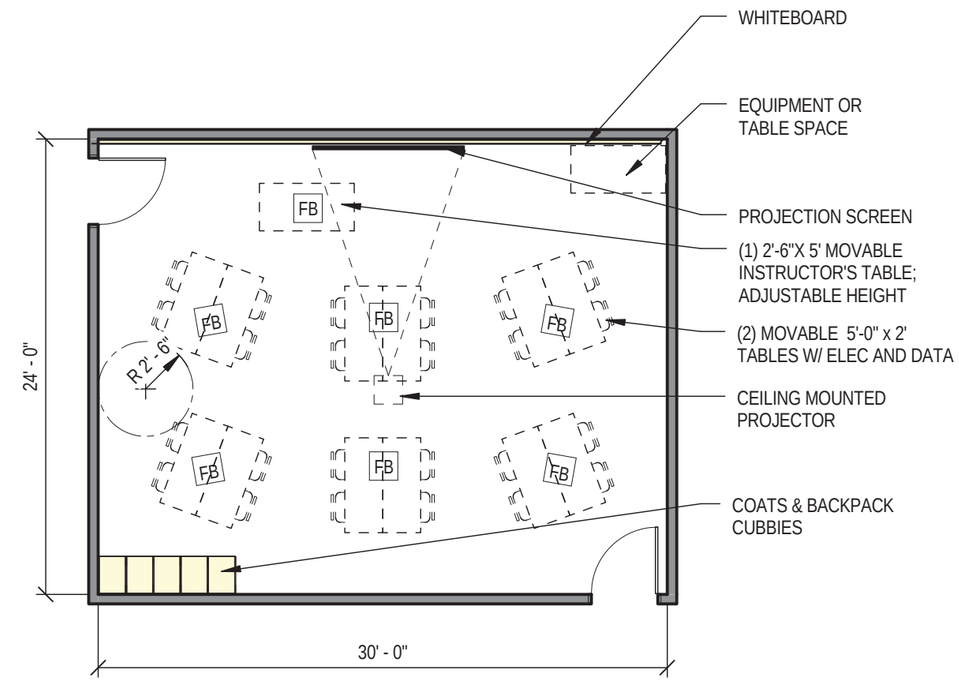

Status Key: **1** = Furnished and Installed by Contractor (CFCI), **2** = Furnished by Owner, Contractor Installed (OFCI), **3** = Furnished and Installed by Owner (OFOI), **4** = Provided Outside of Project Budget

Scale: 1/8" = 1'-0"

CRSA PAYETTE

6.3.2 Coats / Backpacks Alcove

Room Data Sheet Detail

Department: Biology
Issue Date: WORK IN PROGRESS
Room No:

Space Information

Room Function: *Teaching labratory support*
Adjacencies: *See Adjacency Diagrams*
Access: *Students*
Room Utilization *7:00AM to 6:30PM*
General Notes:

Special Requirements

Lighting Controls: *See Proj. Standards, Ch. 3*
Acoustic Req: *See acoustics narrative, Ch. 4*
Structural Req: *None*
Security: *Locked*
Other Spec Req:

Room Size and Capacity

Proposed Area: *100 SF*
Total Area: *100 SF*
Room Quantity: *12*
Assigned Cap: *0*
Unassigned Cap: *4*
Total Cap: *4*

Finishes, Doors and Windows

Floor: *Resilient Tile*
Base: *Resilient, Cove*
Walls: *Gyp. Bd.*
Wall Finish: *Paint*
Ceiling: *ACT (2'x2')*
Ceiling Height:

Door Size: *3'-6" single leaf*
Door Type: *Wood*
Door Vis Panel: *Yes*
Window Treat: *Light-filtering*
Window Skylight: *None*

Casework and Built-ins

Wall Cabinets: *Wood*
Base Cabinets: *Wood*
Counter Tops: *Epoxy Resin*
Counter (LF): *See diagram*
Counter Height: *36" UON*

Shelving (LF): *Yes*
Drawer Units: *Yes*
White Boards: *None*
Tack Boards *None*
Proj. Screen: *None*

Communications

See Project Design Standards in Chapter 3 and electrical/telecomm narrative in Chapter 4

HVAC

Air Changes: *Teach. Support Standard*
Air Circulation: *Teach. Support Standard*
Pressure: *Negative to corridor*
Temperature: *Teach. Support Standard*
Rel. Humidity: *Teach. Support Standard*
Local Exhaust: *As noted*
Air Filtration: *Teach. Support Standard*
CO2 Sensor: *Teach. Support Standard*
Distribution: *Teach. Support Standard*
Other HVAC:

Electrical

See Project Design Standards in Chapter 3 and electrical/telecomm narrative in Chapter 4

Plumbing

Sinks: *None*
Pure Water: *None*
Hot/Cold Water: *None*
Hose Bibb: *None*
Floor Drain: *None*
Waste: *None*
Emer. Eyewash: *None*
Emer. Station: *None*
Gases:
Comp. Air: *None*
Lab Gas: *None*
Vacuum: *None*
CO^2: *None*
Other Gas:
Fire Protection: *Wet Sprinkler*

Equipment

Type	Count	Status

Furniture

Type	Count	Status

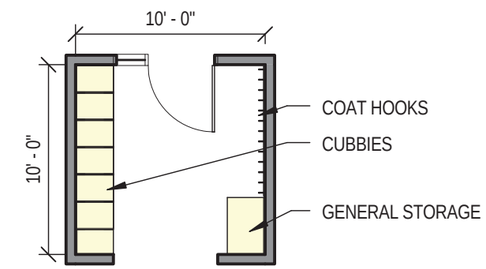

Status Key: **1** = Furnished and Installed by Contractor (CFCI), **2** = Furnished by Owner, Contractor Installed (OFCI), **3** = Furnished and Installed by Owner (OFOI), **4** = Provided Outside of Project Budget

Scale: 1/8" = 1'-0"

CRSA PAYETTE

BLANK PAGE

7.1.1A 350-seat Lecture Hall OPT A

Room Data Sheet Detail

Department: 7.1 Classrooms
Issue Date:
Room No: *NA*

Space Information

Room Function: *Lecture Hall*
Adjacencies: *None*
Access: *Staff, Faculty & Students*
Room Utilization *M-F 7:30 am-10:30 pm*
General Notes: *This is a University-wide scheduled classroom*

Special Requirements

Lighting Controls: *See Proj. Standards, Ch. 3*
Acoustic Req: *See accoustics narrative, Ch. 4*
Structural Req: *Sloped floor*
Security: *Locked*
Other Spec Req:

Room Size and Capacity

Proposed Area: *3250*
Total Area: *3257 SF*
Room Quantity: *1*
Assigned Cap: *0*
Unassigned Cap: *356*
Total Cap: *356*

Finishes, Doors and Windows

Floor: *Carpet Tile*
Base: *Resilient cove*
Walls: *Gypsum Board*
Wall Finish: *Paint low v.o.c.*
Ceiling: *Gypsum Board*
Ceiling Height: *Varies*

Door Size: *3'-0" double leaf*
Door Type: *Wood*
Door Vis Panel: *None*
Window Treat: *None*
Window Skylight: *None*

Casework and Built-ins

Wall Cabinets: *None*
Base Cabinets: *None*
Counter Tops: *None*
Counter (LF): *None*
Counter Height: *None*

Shelving (LF): *None*
Drawer Units: *None*
White Boards: *Yes, as shown*
Tack Boards *None*
Proj. Screen: *Fixed, 2 projectors overlapping image*

Communications

See Project Design Standards in Chapter 3 and electrical/telecomm narrative in Chapter 4

HVAC

Air Changes: *Conf. Rm. Standard*
Air Circulation: *Air may be returned*
Pressure: *Neutral*
Temperature: *Conf. Rm. Standard*
Rel. Humidity: *Conf. Rm. Standard*
Local Exhaust: *No*
Air Filtration: *MERZVZ 8 / MERV 13*
CO2 Sensor: *Yes*
Distribution: *Individual Tstat & VAV Box*
Other HVAC: *Low return air*

Electrical

See Project Design Standards in Chapter 3 and electrical/telecomm narrative in Chapter 4

Plumbing

Sinks: *None*
Pure Water: *None*
Hot/Cold Water: *None*
Hose Bibb: *None*
Floor Drain: *None*
Waste: *None*
Emer. Eyewash: *None*
Emer. Station: *None*
Gases:
Comp. Air: *None*
Lab Gas: *None*
Vacuum: *None*
CO^2: *None*
Other Gas: *None*
Fire Protection: *Sprinkler Heads*

Equipment

Type	Count	Status
70" Flat Panel Monitor. Wall mounted	2	3

Furniture

Type	Count	Status
Fixed Auditorium Seating w/ Tablet Arm	350	3

Status Key: **1** = Furnished and Installed by Contractor (CFCI), **2** = Furnished by Owner, Contractor Installed (OFCI), **3** = Furnished and Installed by Owner (OFOI), **4** = Provided Outside of Project Budget

CRSA PAYETTE

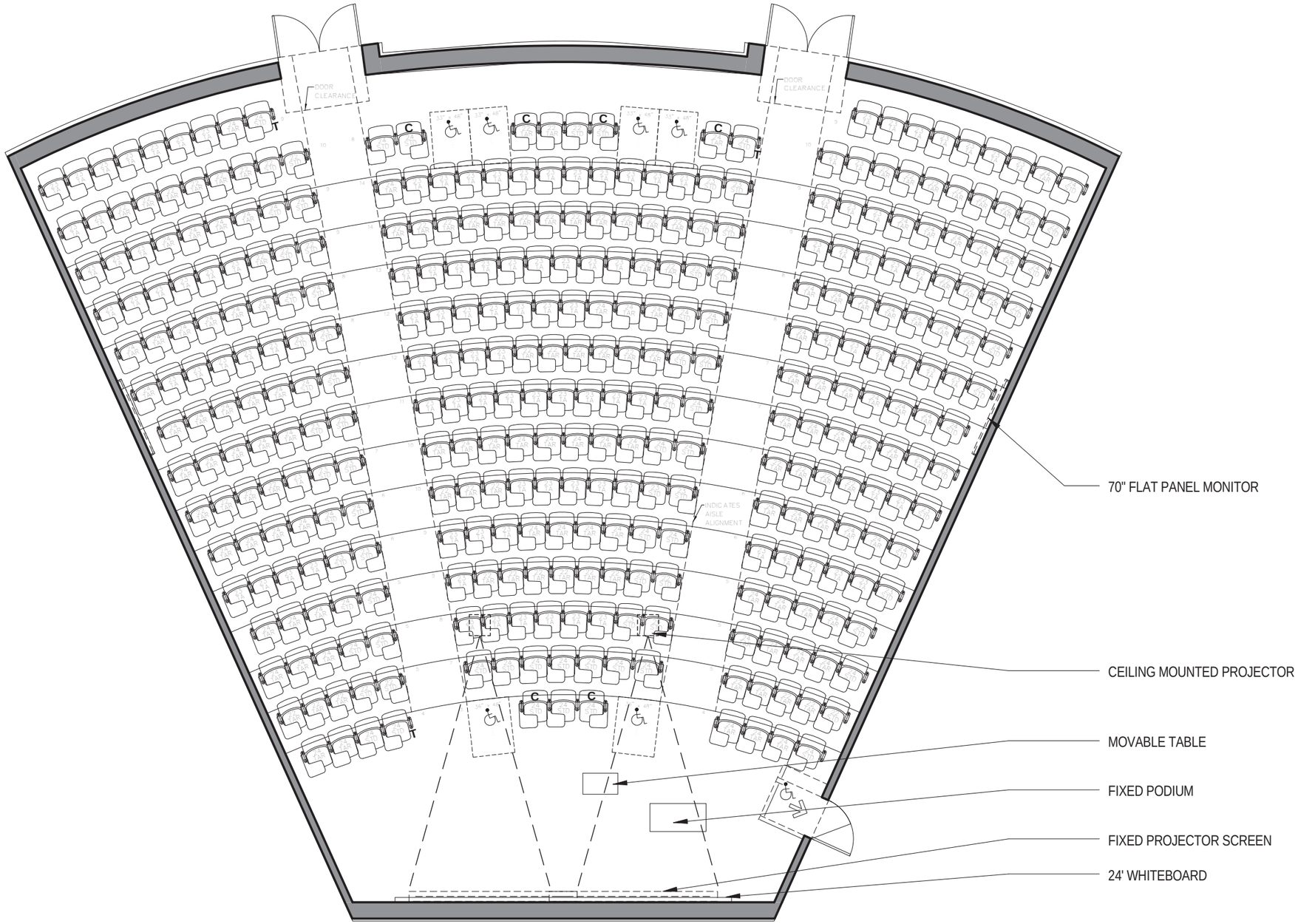
DOOR CLEARANCE
DOOR CLEARANCE
INDICATES AISLE ALIGNMENT
70" FLAT PANEL MONITOR
CEILING MOUNTED PROJECTOR
MOVABLE TABLE
FIXED PODIUM
FIXED PROJECTOR SCREEN
24' WHITEBOARD

Scale: 1/8" = 1'-0"

7.1.1B 314-seat Lecture Hall OPT B

Room Data Sheet Detail

Department: 7.1 Classrooms
Issue Date:

Room No: *NA*

Space Information

Room Function:
Adjacencies:
Access:
Room Utilization
General Notes:

SEE NOTES ON 7.1.1A

Special Requirements

Lighting Controls:See Proj. Standards, Ch. 3
Acoustic Req:
Structural Req:
Security:
Other Spec Req:

Room Size and Capacity

Proposed Area: 3250
Total Area: 3257 SF
Room Quantity: 1
Assigned Cap: 0
Unassigned Cap: 320
Total Cap: 320

Finishes, Doors and Windows

Floor:
Base:
Walls:
Wall Finish:
Ceiling:
Ceiling Height:

Door Size:
Door Type:
Door Vis Panel:
Window Treat:
Window Skylight:

Casework and Built-ins

Wall Cabinets:
Base Cabinets:
Counter Tops:
Counter (LF):
Counter Height:

Shelving (LF):
Drawer Units:
White Boards:
Tack Boards
Proj. Screen:

Communications

See Project Design Standards in Chapter 3 and electrical/telecomm narrative in Chapter 4

HVAC

Air Changes:
Air Circulation:
Pressure:
Temperature:
Rel. Humidity:
Local Exhaust:
Air Filtration:
CO2 Sensor:
Distribution:
Other HVAC:

Electrical

See Project Design Standards in Chapter 3 and electrical/telecomm narrative in Chapter 4

Plumbing

Sinks:
Pure Water:
Hot/Cold Water:
Hose Bibb:
Floor Drain:
Waste:
Emer. Eyewash:
Emer. Station:
Gases:
Comp. Air:
Lab Gas:
Vacuum:
CO^2:
Other Gas:
Fire Protection:

Equipment

Type	Count	Status
70" Flat Panel Monitor. Wall mounted	2	3

Furniture

Type	Count	Status
Fixed Auditorium Seating w/ Tablet Arm	314	3

Status Key: **1** = Furnished and Installed by Contractor (CFCI), **2** = Furnished by Owner, Contractor Installed (OFCI), **3** = Furnished and Installed by Owner (OFOI), **4** = Provided Outside of Project Budget

CRSA PAYETTE

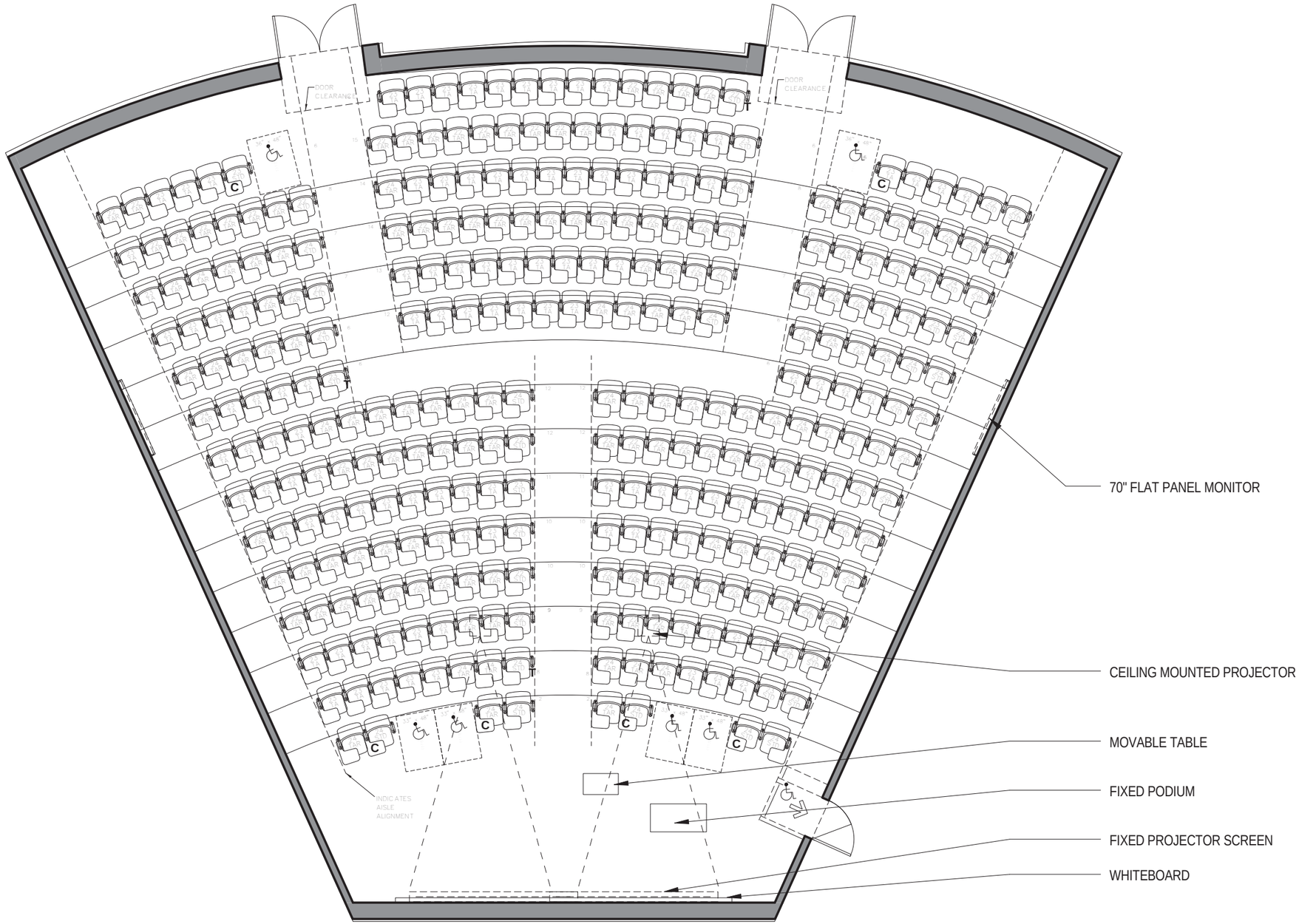

Scale: 1/8" = 1'-0"

CRSA PAYETTE

7.1.2 Active Learning Classroom

Room Data Sheet Detail

Department: 7.1 Classrooms
Issue Date:
Room No: *NA*

Space Information

Room Function: *115 seat lecture hall*
Adjacencies: *None*
Access: *Admininstration, Faculty Students*
Room Utilization *Per USU class schedule*
General Notes: *This is a University-wide scheduled class room*

Special Requirements

Lighting Controls: *See Proj. Standards, Ch. 3*
Acoustic Req: *See accoustics narrative, Ch. 4*
Structural Req: *None*
Security: *Locked*
Other Spec Req:

Room Size and Capacity

Proposed Area: *2040*
Total Area: *3128 SF*
Room Quantity: *1*
Assigned Cap: *0*
Unassigned Cap: *115*
Total Cap: *115*

Finishes, Doors and Windows

Floor: *Carpet Tile*
Base: *Wood*
Walls: *Gypsum drywall*
Wall Finish: *Paint - low v.o.c.*
Ceiling: *ACT (2'x2')*
Ceiling Height: *Varies*

Door Size: *3'-0" single leaf*
Door Type: *Wood*
Door Vis Panel: *Required*
Window Treat: *Room darkening*
Window Skylight: *None*

Casework and Built-ins

Wall Cabinets: *None*
Base Cabinets: *None*
Counter Tops: *None*
Counter (LF): *None*
Counter Height: *None*

Shelving (LF): *None*
Drawer Units: *None*
White Boards: *Yes, as shown*
Tack Boards *None*
Proj. Screen: *Fixed, 2 projectors overlapping image*

Communications

See Project Design Standards in Chapter 3 and electrical/telecomm narrative in Chapter 4

HVAC

Air Changes: *Conf. Rm. Standard*
Air Circulation: *Air may be returned*
Pressure: *Neutral*
Temperature: *Conf. Rm. Standard*
Rel. Humidity: *Conf. Rm. Standard*
Local Exhaust: *No*
Air Filtration: *MERV 8 / MERV 13*
CO2 Sensor: *Yes*
Distribution: *Individual Tstat & VAV Box*
Other HVAC: *Low return air*

Electrical

See Project Design Standards in Chapter 3 and electrical/telecomm narrative in Chapter 4

Plumbing

Sinks: *None*
Pure Water: *None*
Hot/Cold Water: *None*
Hose Bibb: *None*
Floor Drain: *None*
Waste: *None*
Emer. Eyewash: *None*
Emer. Station: *None*
Gases:
Comp. Air: *None*
Lab Gas: *None*
Vacuum: *None*
CO^2: *None*
Other Gas: *None*
Fire Protection: *Sprinkler Heads*

Equipment

Type	Count	Status
60" Flat Panel Monitor. Wall mounted	6	3

Furniture

Type	Count	Status
24" Fixed Table w/ Modesty Panel-25 LF	4	3
24"x60" Classroom Table	35	3
Chair	110	3
Lectern	1	3

Status Key: **1** = Furnished and Installed by Contractor (CFCI), **2** = Furnished by Owner, Contractor Installed (OFCI), **3** = Furnished and Installed by Owner (OFOI), **4** = Provided Outside of Project Budget

CRSA PAYETTE

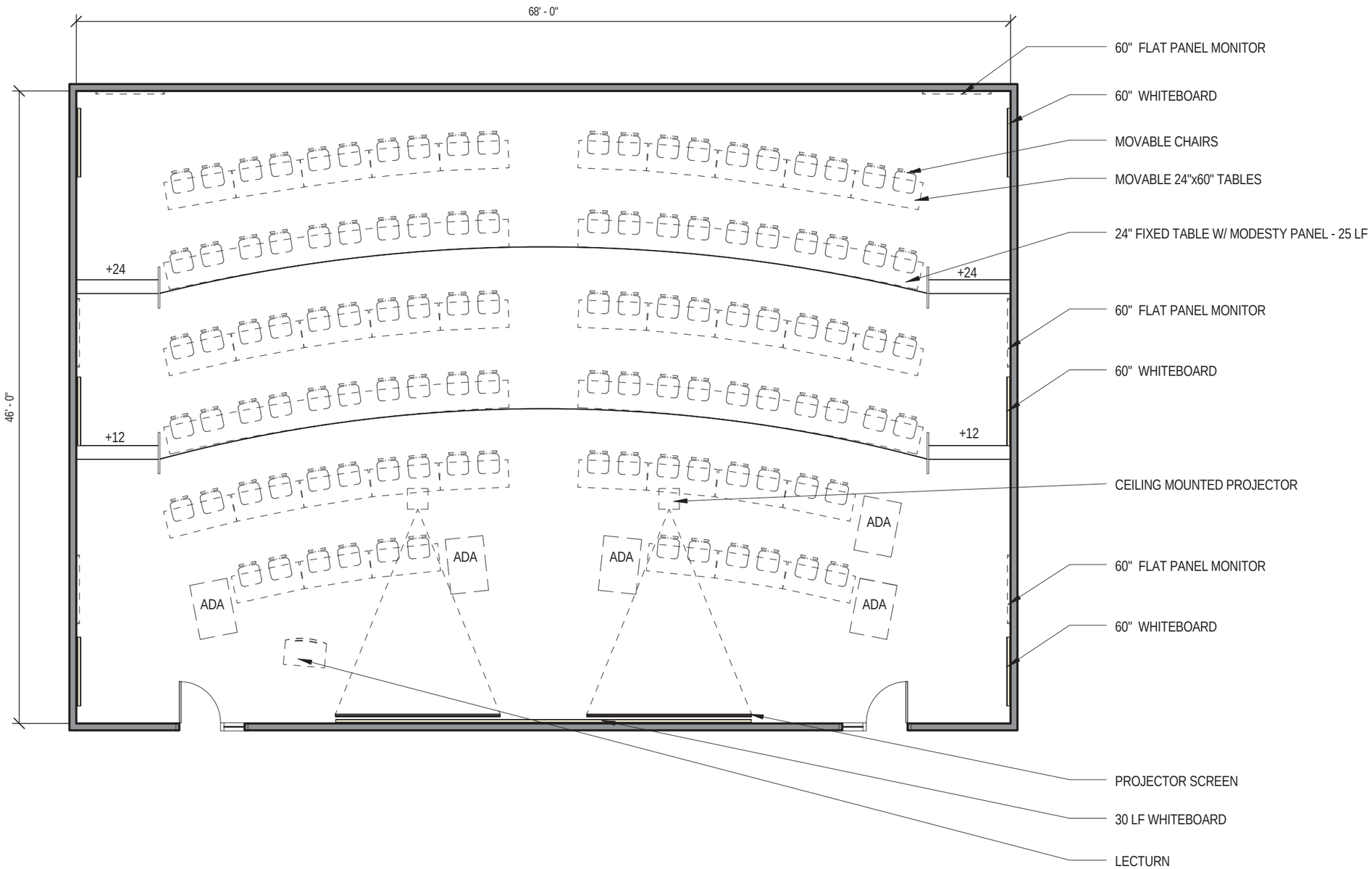

Scale: 1/8" = 1'-0"

CRSA PAYETTE

8.1.1 Herbarium Collection - Compacted

Room Data Sheet Detail

Department: 8.1 Herbarium
Issue Date:
Room No: *NA*

Space Information

Room Function: *High-density shelving to store the Herbarium collection*
Adjacencies: *All 8.1 spaces*
Access: *Staff & Faculty Students*
Room Utilization *M-F 7:30 am-10:30 pm*
General Notes:

Special Requirements

Lighting Controls: *See Proj. Standards, Ch. 3*
Acoustic Req: *See accoustics narrative, Ch. 4*
Structural Req: *None*
Security: *Locked*
Other Spec Req:

Room Size and Capacity

Proposed Area: *2500*
Total Area: *2501 SF*
Room Quantity: *1*
Assigned Cap: *0*
Unassigned Cap: *2*
Total Cap: *2*

Finishes, Doors and Windows

Floor: *Linoleum*
Base: *Rubber*
Walls: *Gypsum Board*
Wall Finish: *Paint - low v.o.c.*
Ceiling: *ACT (2'x2')*
Ceiling Height: *Varies*

Door Size: *3'-0" single leaf*
Door Type: *Wood*
Door Vis Panel: *Required*
Window Treat: *Room darkening*
Window Skylight: *None*

Casework and Built-ins

Wall Cabinets: *Yes*
Base Cabinets: *Yes*
Counter Tops: *None*
Counter (LF): *14'*
Counter Height: *34" U.N.O.*

Shelving (LF): *None*
Drawer Units: *Yes*
White Boards: *None*
Tack Boards *None*
Proj. Screen: *None*

Communications

See Project Design Standards in Chapter 3 and electrical/telecomm narrative in Chapter 4

HVAC

Air Changes: *Code req'd ventilation*
Air Circulation: *Air may be returned*
Pressure: *Neutral*
Temperature: *72 deg. F. /- 4 Deg. F*
Rel. Humidity: *60% Rh Max.*
Local Exhaust: *No*
Air Filtration: *MERV 8/ MERV 13*
CO2 Sensor: *No*
Distribution: *Individual Tstat & VAV Box*
Other HVAC: *N/A*

Electrical

See Project Design Standards in Chapter 3 and electrical/telecomm narrative in Chapter 4

Plumbing

Sinks: *None*
Pure Water: *None*
Hot/Cold Water: *None*
Hose Bibb: *None*
Floor Drain: *None*
Waste: *None*
Emer. Eyewash: *None*
Emer. Station: *None*
Gases:
Comp. Air: *None*
Lab Gas: *None*
Vacuum: *None*
CO^2: *None*
Other Gas: *None*
Fire Protection: *Sprinkler Heads*

Equipment

Furniture

Type	Count	Status
Chair-Task	1	
Compact Shelving System 14'	1	3
Compact Shelving System 25'	1	3

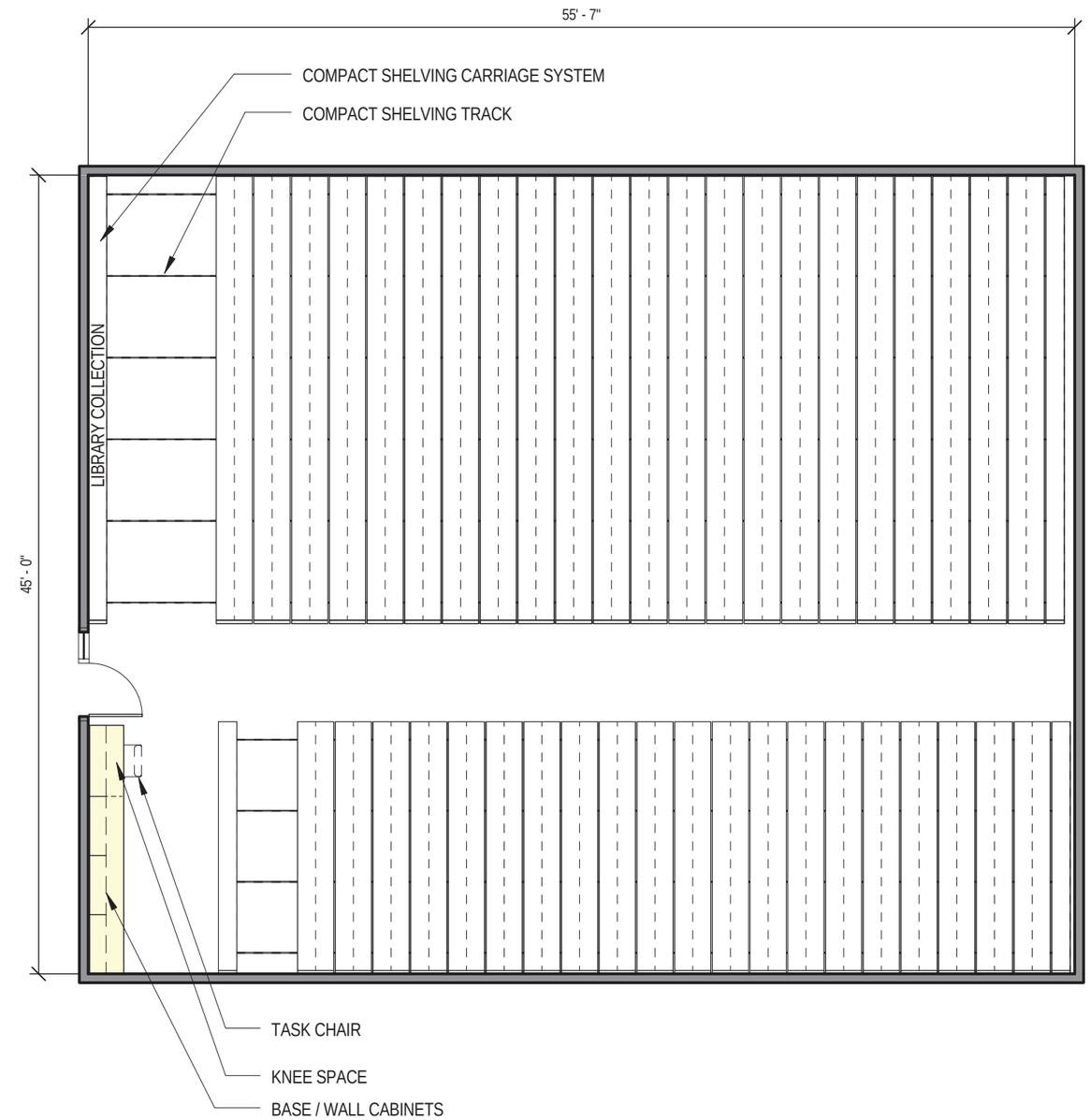

Status Key: **1** = Furnished and Installed by Contractor (CFCI), **2** = Furnished by Owner, Contractor Installed (OFCI), **3** = Furnished and Installed by Owner (OFOI), **4** = Provided Outside of Project Budget

Scale: 1/8" = 1'-0"

CRSA PAYETTE

8.1.2 Herbarium Reception

Room Data Sheet Detail

Department: 8.1 Herbarium
Issue Date:
Room No: *NA*

Space Information

Room Function: *Area for reception and display of herbarium collection by visitors*
Adjacencies: *Herbarium Office 8.1.6*
Access: *Public*
Room Utilization *Temporary work area, small collections display*
General Notes: *Visible from public corridor*

Special Requirements

Lighting Controls: *See Proj. Standards, Ch. 3*
Acoustic Req: *See accoustics narrative, Ch. 4*
Structural Req: *None*
Security: *Locked*
Other Spec Req:

Room Size and Capacity

Proposed Area: *300*
Total Area: *300 SF*
Room Quantity: *1*
Assigned Cap: *0*
Unassigned Cap: *1*
Total Cap: *1*

Finishes, Doors and Windows

Floor: *Linoleum*
Base: *Rubber*
Walls: *Gypsum Board*
Wall Finish: *Paint - low v.o.c.*
Ceiling: *ACT (2'x2')*
Ceiling Height: *Varies*

Door Size: *3'-0" single leaf*
Door Type: *Wood*
Door Vis Panel: *Required*
Window Treat: *Light filtering*
Window Skylight: *None*

Casework and Built-ins

Wall Cabinets:
Base Cabinets:
Counter Tops:
Counter (LF):
Counter Height:

Shelving (LF):
Drawer Units:
White Boards: *No*
Tack Boards *No*
Proj. Screen: *No*

Communications

See Project Design Standards in Chapter 3 and electrical/telecomm narrative in Chapter 4

HVAC

Air Changes: *Office Standard*
Air Circulation: *Air may be returned*
Pressure: *Neutral*
Temperature: *Office Standard*
Rel. Humidity: *Office Standard*
Local Exhaust: *No*
Air Filtration: *MERV 8 / MERV 13*
CO2 Sensor: *No*
Distribution: *Individual Tstat & VAV Box*
Other HVAC: *N/A*

Electrical

See Project Design Standards in Chapter 3 and electrical/telecomm narrative in Chapter 4

Plumbing

Sinks: *None*
Pure Water: *None*
Hot/Cold Water: *None*
Hose Bibb: *None*
Floor Drain: *None*
Waste: *None*
Emer. Eyewash: *None*
Emer. Station: *None*
Gases:
Comp. Air: *None*
Lab Gas: *None*
Vacuum: *None*
CO^2: *None*
Other Gas: *None*
Fire Protection: *Sprinkler Heads*

Equipment

Furniture

Type	Count	Status
Display Cabinets- By Owner	1	4
Task Chair	2	3
Trash/Recycle Bin	4	3

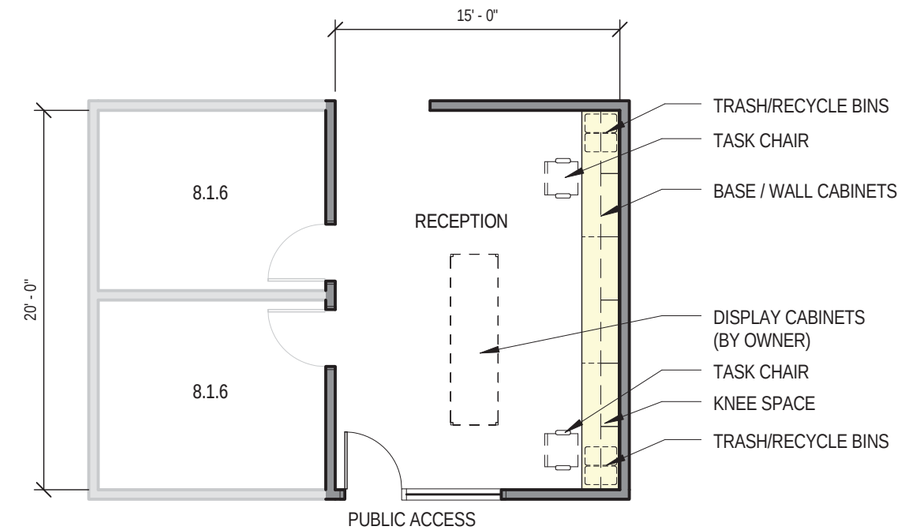

Status Key: **1** = Furnished and Installed by Contractor (CFCI), **2** = Furnished by Owner, Contractor Installed (OFCI), **3** = Furnished and Installed by Owner (OFOI), **4** = Provided Outside of Project Budget

Scale: 1/8" = 1'-0"

CRSA PAYETTE

8.1.3 Herbarium Lab - Sample Processing

Room Data Sheet Detail

Department: 8.1 Herbarium
Issue Date:
Room No: *NA*

Space Information

Room Function: *Staff workspace to receive, process & inventory incoming samples*
Adjacencies: *8.1.1, 8.1.4*
Access: *Staff Faculty*
Room Utilization *M-F 7:30 am-10:30 pm*
General Notes:

Special Requirements

Lighting Controls: *See Proj. Standards, Ch. 3*
Acoustic Req: *See accoustics narrative, Ch. 4*
Structural Req: *None*
Security: *Locked*
Other Spec Req:

Room Size and Capacity

Proposed Area: *150*
Total Area: *150 SF*
Room Quantity: *1*
Assigned Cap: *0*
Unassigned Cap: *2*
Total Cap: *2*

Finishes, Doors and Windows

Floor: *Linoleum*
Base: *Rubber*
Walls: *Gypsum drywall*
Wall Finish: *Paint - low v.o.c.*
Ceiling: *ACT (2'x2')*
Ceiling Height: *Varies*

Door Size: *3'-0" single leaf*
Door Type: *Wood*
Door Vis Panel: *None*
Window Treat: *Room darkening*
Window Skylight: *None*

Casework and Built-ins

Wall Cabinets: *None*
Base Cabinets: *Wood*
Counter Tops: *Plastic Laminate*
Counter (LF): *15'*
Counter Height: *34" U.N.O.*

Shelving (LF): *None*
Drawer Units: *None*
White Boards: *None*
Tack Boards *None*
Proj. Screen: *None*

Communications

See Project Design Standards in Chapter 3 and electrical/telecomm narrative in Chapter 4

HVAC

Air Changes: *Office Standard*
Air Circulation: *Air may be returned*
Pressure: *Neutral*
Temperature: *Office Standard*
Rel. Humidity: *Office Standard*
Local Exhaust: *No*
Air Filtration: *MERV 8 / MERV 13*
CO2 Sensor: *No*
Distribution: *Individual Tstat & VAV Box*
Other HVAC: *N/A*

Electrical

See Project Design Standards in Chapter 3 and electrical/telecomm narrative in Chapter 4

Plumbing

Sinks: *Yes*
Pure Water: *None*
Hot/Cold Water: *Yes*
Hose Bibb: *None*
Floor Drain: *None*
Waste: *Yes*
Emer. Eyewash: *Yes*
Emer. Station: *None*
Gases:
Comp. Air: *None*
Lab Gas: *None*
Vacuum: *None*
CO^2: *None*
Other Gas: *None*
Fire Protection: *Sprinkler Heads*

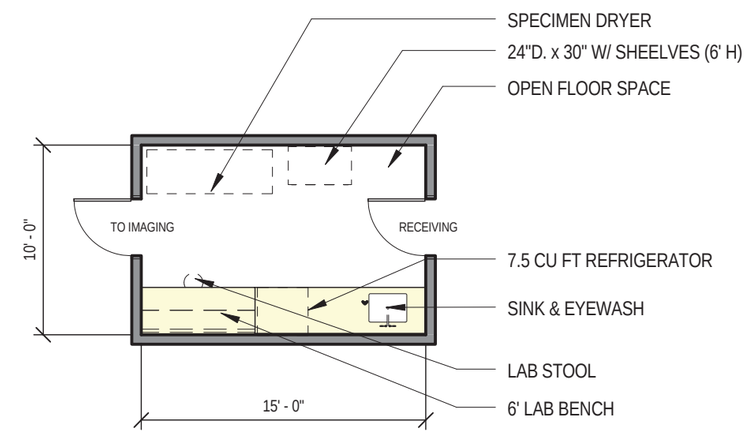

Equipment

Type	Count	Status
7.5 cuft. Refrigerator	1	4
Specimen Dryer	1	4

Furniture

Type	Count	Status
24" D. x 36" W. Shleves (6' H.)	1	1
Lab Stool	1	3

Status Key: **1** = Furnished and Installed by Contractor (CFCI), **2** = Furnished by Owner, Contractor Installed (OFCI), **3** = Furnished and Installed by Owner (OFOI), **4** = Provided Outside of Project Budget

Scale: 1/8" = 1'-0"

CRSA PAYETTE

8.1.4 Herbarium Lab - Imaging/Data Basing

Room Data Sheet Detail

Department: 8.1 Herbarium
Issue Date:
Room No: *NA*

Space Information

Room Function: *Space for research samples from the herbarium collection*
Adjacencies: *8.1.3*
Access: *Staff Faculty*
Room Utilization *M-F 7:30 am-10:30 pm*
General Notes:

Special Requirements

Lighting Controls: *See Proj. Standards, Ch. 3*
Acoustic Req: *See accoustics narrative, Ch. 4*
Structural Req: *None*
Security: *Locked*
Other Spec Req:

Room Size and Capacity

Proposed Area: *150*
Total Area: *150 SF*
Room Quantity: *1*
Assigned Cap: *0*
Unassigned Cap: *2*
Total Cap: *2*

Finishes, Doors and Windows

Floor: *Linoleum*
Base: *Rubber*
Walls: *Gypsum drywall*
Wall Finish: *Paint - low v.o.c.*
Ceiling: *ACT (2'x2')*
Ceiling Height: *Varies*

Door Size: *3'-0" single leaf*
Door Type: *Wood*
Door Vis Panel: *None*
Window Treat: *Room darkening*
Window Skylight: *None*

Casework and Built-ins

Wall Cabinets: *None*
Base Cabinets: *Wood*
Counter Tops: *Plastic Laminate*
Counter (LF): *12'*
Counter Height: *34" U.N.O.*

Shelving (LF):
Drawer Units:
White Boards: *Yes*
Tack Boards *No*
Proj. Screen: *No*

Communications

See Project Design Standards in Chapter 3 and electrical/telecomm narrative in Chapter 4

HVAC

Air Changes: *Office Standard*
Air Circulation: *Air may be returned*
Pressure: *Neutral*
Temperature: *Office Standard*
Rel. Humidity: *Office Standard*
Local Exhaust: *No*
Air Filtration: *MERV 8 / MERV 13*
CO2 Sensor: *No*
Distribution: *Individual Tstat & VAV Box*
Other HVAC: *N/A*

Electrical

See Project Design Standards in Chapter 3 and electrical/telecomm narrative in Chapter 4

Plumbing

Sinks: *Yes*
Pure Water: *None*
Hot/Cold Water: *Yes*
Hose Bibb: *None*
Floor Drain: *None*
Waste: *Yes*
Emer. Eyewash: *Yes*
Emer. Station: *None*
Gases:
Comp. Air: *None*
Lab Gas: *None*
Vacuum: *None*
CO^2: *None*
Other Gas: *None*
Fire Protection: *Sprinkler Heads*

Equipment

Type	Count	Status
20.5 CU FR / 36" W. Freezer	1	1
Imaging Unit	1	4
Office Computer	2	4

Furniture

Type	Count	Status
Full width collection cabinet (42")	1	1
Lab Cart	2	3
Lab Stool	2	3

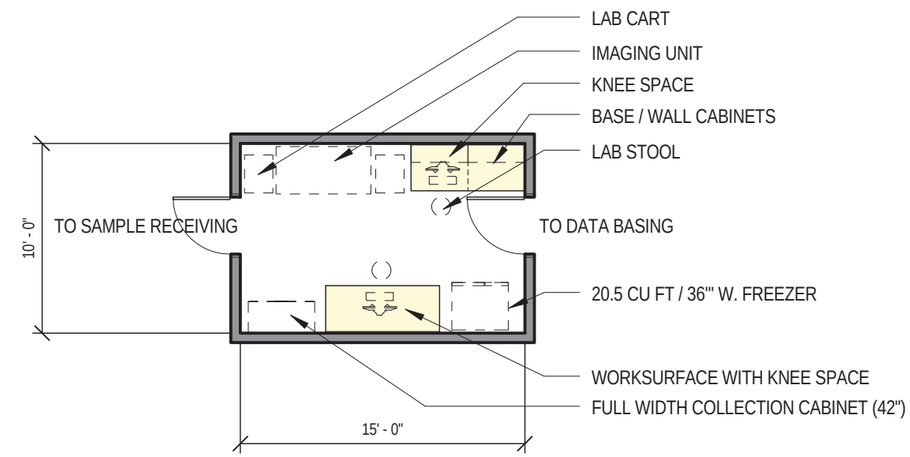

Status Key: **1** = Furnished and Installed by Contractor (CFCI), **2** = Furnished by Owner, Contractor Installed (OFCI), **3** = Furnished and Installed by Owner (OFOI), **4** = Provided Outside of Project Budget

Scale: 1/8" = 1'-0"

CRSA PAYETTE

8.1.5 Herbarium Lab - Research Workstations

Room Data Sheet Detail

Department: 8.1 Herbarium
Issue Date:
Room No: *NA*

Space Information

Room Function: *Workspace to receive, store and process incoming samples*
Adjacencies: *8.1.2*
Access: *Staff Faculty*
Room Utilization *M-F 7:30 am-10:30 pm*
General Notes:

Special Requirements

Lighting Controls: *See Proj. Standards, Ch. 3*
Acoustic Req: *See accoustics narrative, Ch. 4*
Structural Req: *None*
Security: *Locked*
Other Spec Req:

Room Size and Capacity

Proposed Area: *150*
Total Area: *150 SF*
Room Quantity: *1*
Assigned Cap: *0*
Unassigned Cap: *4*
Total Cap: *4*

Finishes, Doors and Windows

Floor: *Linoleum*
Base: *Rubber*
Walls: *Gypsum drywall*
Wall Finish: *Paint - low v.o.c.*
Ceiling: *ACT (2'x2')*
Ceiling Height: *Varies*

Door Size: *3'-6" single leaf*
Door Type: *Wood*
Door Vis Panel: *None*
Window Treat: *Room darkening*
Window Skylight: *None*

Casework and Built-ins

Wall Cabinets: *None*
Base Cabinets: *None*
Counter Tops: *None*
Counter (LF): *None*
Counter Height: *None*

Shelving (LF): *None*
Drawer Units: *None*
White Boards: *No*
Tack Boards *No*
Proj. Screen: *No*

Communications

See Project Design Standards in Chapter 3 and electrical/telecomm narrative in Chapter 4

HVAC

Air Changes: *Office Standard*
Air Circulation: *Air may be returned*
Pressure: *Neutral*
Temperature: *Office Standard*
Rel. Humidity: *Office Standard*
Local Exhaust: *NO*
Air Filtration: *MERV 8 / MERV 13*
CO2 Sensor: *Yes*
Distribution: *Individual Tstat & VAV Box*
Other HVAC: *N/A*

Electrical

See Project Design Standards in Chapter 3 and electrical/telecomm narrative in Chapter 4

Plumbing

Sinks: *None*
Pure Water: *None*
Hot/Cold Water: *None*
Hose Bibb: *None*
Floor Drain: *None*
Waste: *None*
Emer. Eyewash: *None*
Emer. Station: *None*
Gases:
Comp. Air: *None*
Lab Gas: *None*
Vacuum: *None*
CO^2: *None*
Other Gas: *None*
Fire Protection: *Sprinkler Heads*

Equipment

Furniture

Type	Count	Status
12" Deep Wall Mounted Shelves	2	3
24" Worksurface- 10 LF	2	3
24"x30" Specimen Cabinet	1	3
Lab Cart	5	3
Lab Chair	4	3
Pedestal File Cabinet	3	3

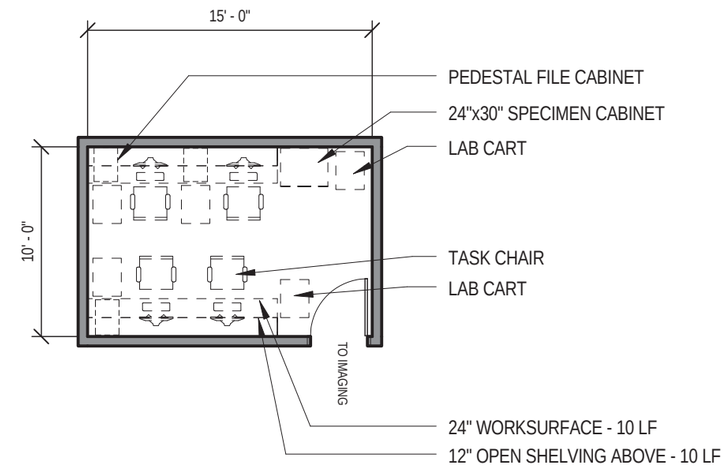

Status Key: **1** = Furnished and Installed by Contractor (CFCI), **2** = Furnished by Owner, Contractor Installed (OFCI), **3** = Furnished and Installed by Owner (OFOI), **4** = Provided Outside of Project Budget

Scale: 1/8" = 1'-0"

CRSA PAYETTE

8.1.6 Herbarium Office

Room Data Sheet Detail

Department: 8.1 Herbarium
Issue Date:
Room No: *NA*

Space Information

Room Function: *Office space to research, prep and review samples*
Adjacencies: *Herbarium Reception 8.1.2*
Access: *Staff Faculty*
Room Utilization *M-F 7:30 am-10:30 pm*
General Notes:

Special Requirements

Lighting Controls: *See Proj. Standards, Ch. 3*
Acoustic Req: *See accoustics narrative, Ch. 4*
Structural Req: *None*
Security: *Locked*
Other Spec Req:

Room Size and Capacity

Proposed Area: *120*
Total Area: *120 SF*
Room Quantity: *2*
Assigned Cap: *1*
Unassigned Cap: *1*
Total Cap: *2*

Finishes, Doors and Windows

Floor: *Linoleum*
Base: *Rubber*
Walls: *Gypsum Board*
Wall Finish: *Paint - low v.o.c.*
Ceiling: *ACT (2'x2')*
Ceiling Height: *Varies*

Door Size: *3'-0" single leaf*
Door Type: *Wood*
Door Vis Panel: *None*
Window Treat: *Light filtering*
Window Skylight: *None*

Casework and Built-ins

Wall Cabinets: *None*
Base Cabinets: *None*
Counter Tops: *None*
Counter (LF): *None*
Counter Height: *None*

Shelving (LF): *None*
Drawer Units: *None*
White Boards: *Yes*
Tack Boards *None*
Proj. Screen: *None*

Communications

See Project Design Standards in Chapter 3 and electrical/telecomm narrative in Chapter 4

HVAC

Air Changes: *Office Standard*
Air Circulation: *Air may be returned*
Pressure: *Neutral*
Temperature: *Office Standard*
Rel. Humidity: *Office Standard*
Local Exhaust: *No*
Air Filtration: *MERV 8 / MERV 13*
CO2 Sensor: *No*
Distribution: *Shared Tstat & VAV Box*
Other HVAC: *N/A*

Electrical

See Project Design Standards in Chapter 3 and electrical/telecomm narrative in Chapter 4

Plumbing

Sinks: *None*
Pure Water: *None*
Hot/Cold Water: *None*
Hose Bibb: *None*
Floor Drain: *None*
Waste: *None*
Emer. Eyewash: *None*
Emer. Station: *None*
Gases:
Comp. Air: *None*
Lab Gas: *None*
Vacuum: *None*
CO^2: *None*
Other Gas: *None*
Fire Protection: *Sprinkler Heads*

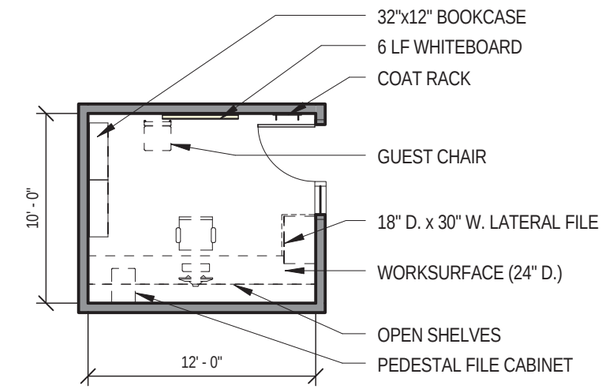

Equipment

Type	Count	Status
Office Computer	1	4

Furniture

Type	Count	Status
12" Deep Open Shelves	1	3
18" D. x 30" W. Lateral File	1	3
32"x12" Bookcase	2	3
Guest Chair	1	3
Pedestal File Cabinet	1	3
Task Chair	1	3
Worksurface (24" D.)	1	3

Status Key: **1** = Furnished and Installed by Contractor (CFCI), **2** = Furnished by Owner, Contractor Installed (OFCI), **3** = Furnished and Installed by Owner (OFOI), **4** = Provided Outside of Project Budget

Scale: 1/8" =

CRSA PAYETTE

8.2.1 USDA Bee Collection - Lab

Room Data Sheet Detail

Department: Biology
Issue Date: WORK IN PROGRESS
Room No:

Space Information

Room Function: Research and teaching labratory
Adjacencies: See Adjacency Diagrams
Access: Faculty, Students, Staff
Room Utilization 7:00AM to 6:30PM
General Notes:

Special Requirements

Lighting Controls: See Proj. Standards, Ch. 3
Acoustic Req: See acoustics narrative, Ch. 4
Structural Req: Compacted Storage
Security: Locked
Other Spec Req:

Room Size and Capacity

Proposed Area: 1560 SF
Total Area: 1552 SF
Room Quantity: 1
Assigned Cap: 2
Unassigned Cap: 18
Total Cap: 20

Finishes, Doors and Windows

Floor: Resilient Tile
Base: Resilient, Cove
Walls: Gyp. Bd.
Wall Finish: Paint
Ceiling: ACT (2'x2')
Ceiling Height: Varies

Door Size: 3'-6" single leaf
Door Type: Wood
Door Vis Panel: Yes
Window Treat: Light-filtering
Window Skylight: None

Casework and Built-ins

Wall Cabinets: Wood
Base Cabinets: Wood
Counter Tops: Epoxy resin
Counter (LF): See diagram
Counter Height: 36" UON

Shelving (LF): Yes
Drawer Units: Yes
White Boards: None
Tack Boards None
Proj. Screen: None

Communications

See Project Design Standards in Chapter 3 and electrical/telecomm narrative in Chapter 4

HVAC

Air Changes: Research Lab Standard
Air Circulation: Research Lab Standard
Pressure: Positive to corridor
Temperature: Research Lab Standard
Rel. Humidity: Research Lab Standard
Local Exhaust: None
Air Filtration: MERV 8/MERV 13
CO2 Sensor: None
Distribution: Individual TStat and VAV Box
Other HVAC:

Electrical

See Project Design Standards in Chapter 3 and electrical/telecomm narrative in Chapter 4

Plumbing

Sinks: None
Pure Water: None
Hot/Cold Water: None
Hose Bibb: None
Floor Drain: None
Waste: None
Emer. Eyewash: None
Emer. Station: None
Gases:
Comp. Air: None
Lab Gas: None
Vacuum: None
CO^2: None
Other Gas:
Fire Protection: Wet Sprinkler

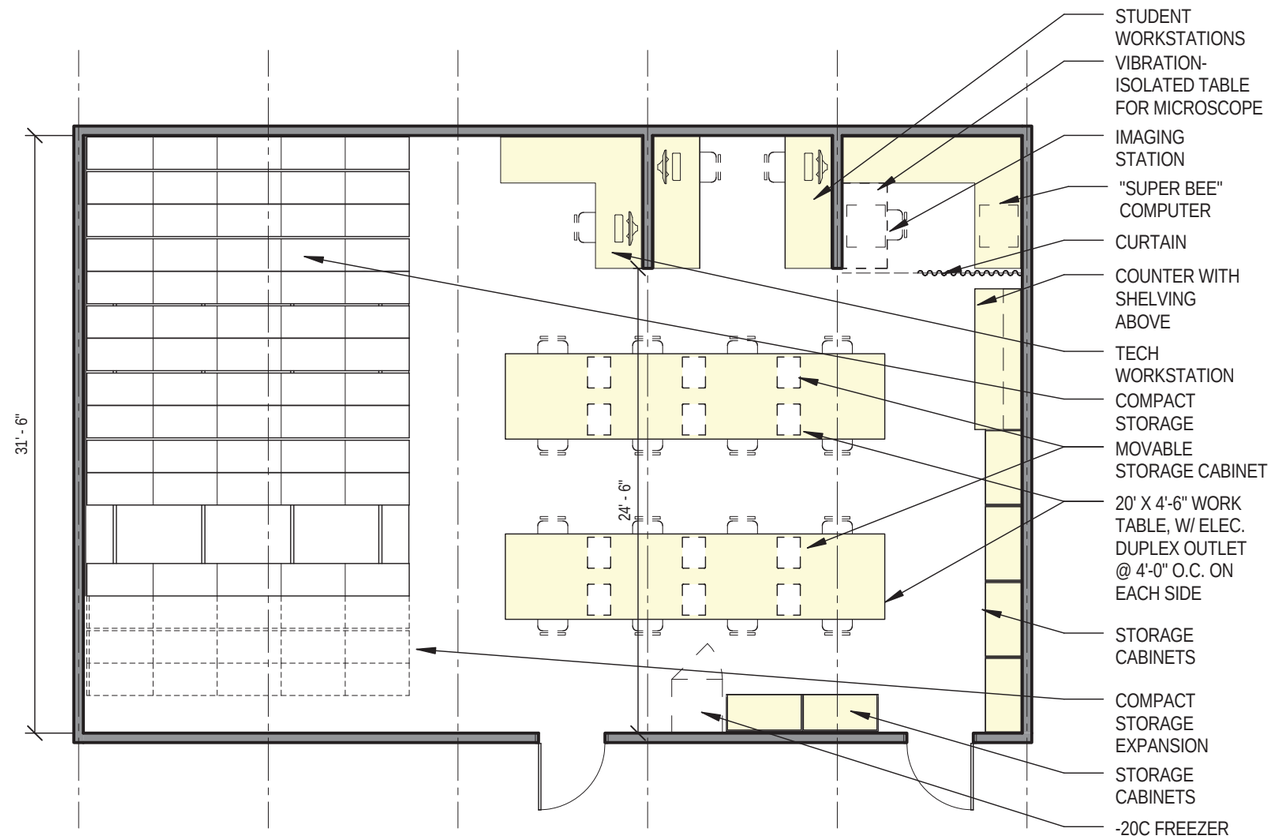

Equipment

Type	Count	Status
Blackout Curtain	1	1
Compact Shelving Row, 17'	12	1
Computer	3	4
Freezer	1	3
Microscope	1	4
Super Bee Computer	1	4

Furniture

Type	Count	Status
Chair	20	3
File Cabinet	12	3
Vibration Isolated Table	1	4

Status Key: **1** = Furnished and Installed by Contractor (CFCI), **2** = Furnished by Owner, Contractor Installed (OFCI), **3** = Furnished and Installed by Owner (OFOI), **4** = Provided Outside of Project Budget

Scale: 1/8" = 1'-0"

CRSA PAYETTE

8.3.1 USU Insect Collection

Room Data Sheet Detail

Department: Biology
Issue Date: WORK IN PROGRESS
Room No:

Space Information

Room Function: *Research and teaching laboratory*
Adjacencies: *See Adjacency Diagrams*
Access: *Faculty, Students, Staff*
Room Utilization *7:00AM to 6:30PM*
General Notes:

Special Requirements

Lighting Controls: *See Proj. Standards, Ch. 3*
Acoustic Req: *See acoustics narrative, Ch. 4*
Structural Req: *Compacted Storage*
Security: *Locked*
Other Spec Req:

Room Size and Capacity

Proposed Area: *1875 SF*
Total Area: *1868 SF*
Room Quantity: *1*
Assigned Cap: *2*
Unassigned Cap: *9*
Total Cap: *11*

Finishes, Doors and Windows

Floor: *Resilient Tile*
Base: *Resilient, Cove*
Walls: *Gyp. Bd.*
Wall Finish: *Paint*
Ceiling: *ACT (2'x2')*
Ceiling Height: *Varies*

Door Size: *3'-6" single leaf*
Door Type: *Wood*
Door Vis Panel: *Yes*
Window Treat: *Light-filtering*
Window Skylight: *None*

Casework and Built-ins

Wall Cabinets: *Wood*
Base Cabinets: *Wood*
Counter Tops: *Epoxy resin*
Counter (LF): *See diagram*
Counter Height: *36" UON*

Shelving (LF): *Yes*
Drawer Units: *Yes*
White Boards: *None*
Tack Boards *None*
Proj. Screen: *None*

Communications

See Project Design Standards in Chapter 3 and electrical/telecomm narrative in Chapter 4

HVAC

Air Changes: *Ventilation Req'ments only*
Air Circulation: *Research Lab Standard*
Pressure: *Positive to corridor*
Temperature: *Research Lab Standard*
Rel. Humidity: *Research Lab Standard*
Local Exhaust: *None*
Air Filtration: *MERV 8/MERV 13*
CO2 Sensor: *None*
Distribution: *Individual TStat and VAV Box*
Other HVAC:

Electrical

See Project Design Standards in Chapter 3 and electrical/telecomm narrative in Chapter 4

Plumbing

Sinks: *Epoxy resin, grey*
Pure Water: *Only as indicated*
Hot/Cold Water: *Yes*
Hose Bibb: *None*
Floor Drain: *At all emergency showers*
Waste: *Lab Waste*
Emer. Eyewash: *Yes*
Emer. Station: *Yes*
Gases:
Comp. Air: *Yes, as noted*
Lab Gas: *Yes, as noted*
Vacuum: *Yes, as noted*
CO^2: *None*
Other Gas:
Fire Protection: *Wet Sprinkler*

Equipment

Type	Count	Status
32"x32" Refrigerator	2	3
Compact Shelving Row, 15'	5	1
Compact Shelving Row, 18'-8"	17	1
Computer	3	4

Furniture

Type	Count	Status
Chair	13	3
File Cabinet, 4 Drawer - 15"x18"	15	3
Office Workstation	1	3

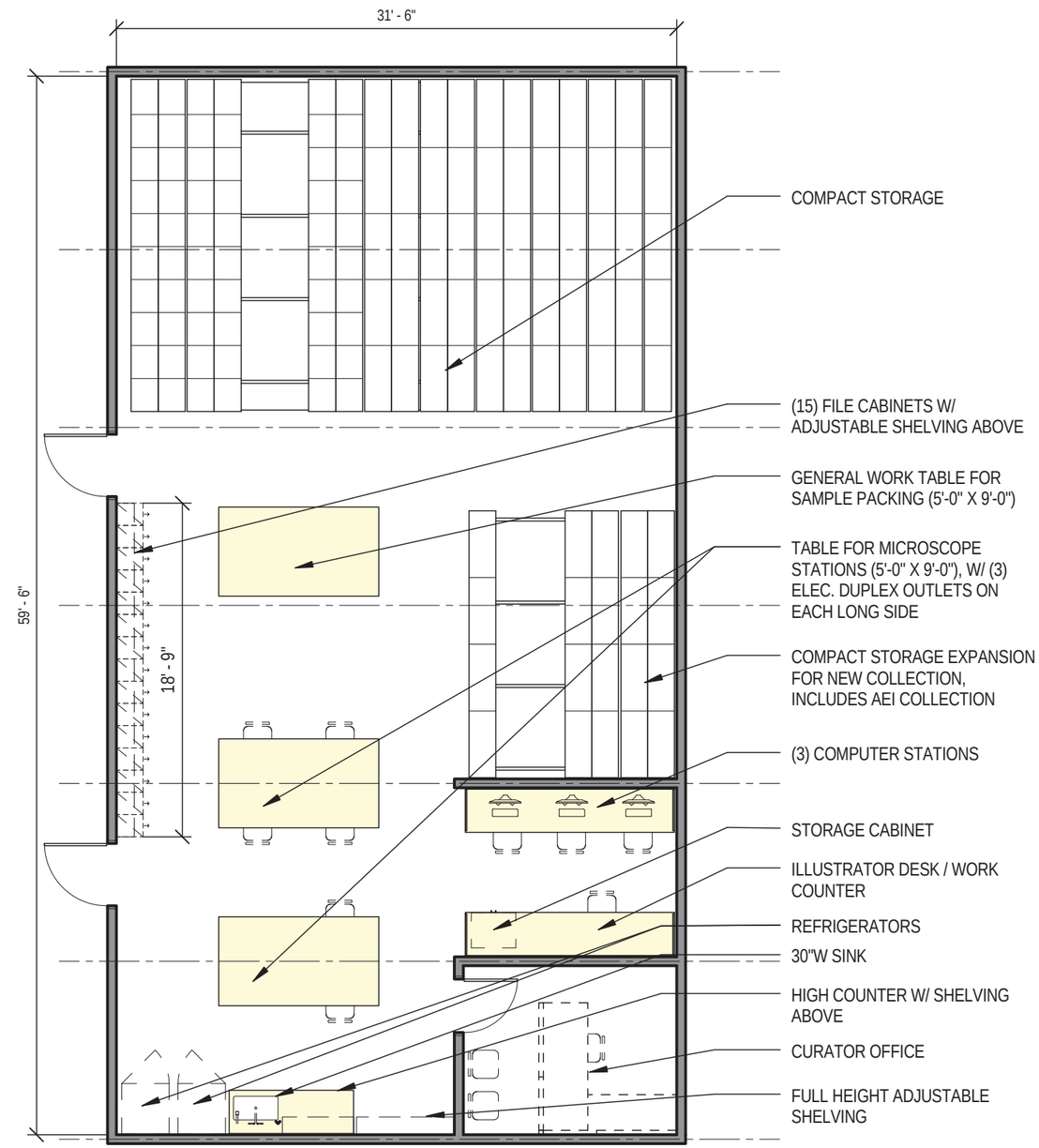

Status Key: **1** = Furnished and Installed by Contractor (CFCI), **2** = Furnished by Owner, Contractor Installed (OFCI), **3** = Furnished and Installed by Owner (OFOI), **4** = Provided Outside of Project Budget

Scale: 1/8" = 1'-0"

CRSA PAYETTE

8.4.1 Vertebrate Collection

Room Data Sheet Detail

Department: 8.4 USU Vertebrate Collection
Issue Date:
Room No: *NA*

Space Information

Room Function: *Storage, maintenance and research from Vertebrate Collection*
Adjacencies: *6.1.8*
Access: *Staff Faculty*
Room Utilization *M-F 7:30 am-10:30 pm*
General Notes:

Special Requirements

Lighting Controls: *See Proj. Standards, Ch. 3*
Acoustic Req: *See accoustics narrative, Ch. 4*
Structural Req: *None*
Security: *Locked*
Other Spec Req:

Room Size and Capacity

Proposed Area: *990*
Total Area: *990 SF*
Room Quantity: *1*
Assigned Cap: *0*
Unassigned Cap: *10*
Total Cap: *10*

Finishes, Doors and Windows

Floor: *Lino*
Base: *Rubber*
Walls: *Gypsum drywall*
Wall Finish: *Paint - low v.o.c.*
Ceiling: *ACT (2'x2')*
Ceiling Height: *Varies*

Door Size: *3'-0" single leaf*
Door Type: *Wood*
Door Vis Panel: *None*
Window Treat: *Room darkening*
Window Skylight: *None*

Casework and Built-ins

Wall Cabinets: *Yes*
Base Cabinets: *Yes*
Counter Tops: *Plastic Laminate*
Counter (LF): *9'*
Counter Height: *34" U.N.O.*

Shelving (LF): *10'*
Drawer Units: *Yes*
White Boards: *Yes*
Tack Boards *None*
Proj. Screen: *None*

Communications

See Project Design Standards in Chapter 3 and electrical/telecomm narrative in Chapter 4

HVAC

Air Changes: *Research Lab standard*
Air Circulation: *Air must be exhausted*
Pressure: *Negative to corridor*
Temperature: *Research Lab standard*
Rel. Humidity: *Research Lab standard*
Local Exhaust: *Yes as noted*
Air Filtration: *MERV 8 / MERV 13*
CO2 Sensor: *No*
Distribution: *Fume Hood Tie-in to VAV Box*
Other HVAC: *Cabinets*

Electrical

See Project Design Standards in Chapter 3 and electrical/telecomm narrative in Chapter 4

Plumbing

Sinks: *Yes*
Pure Water: *None*
Hot/Cold Water: *Yes*
Hose Bibb: *None*
Floor Drain: *Yes*
Waste: *Yes*
Emer. Eyewash: *Yes*
Emer. Station: *None*
Gases:
Comp. Air: *None*
Lab Gas: *None*
Vacuum: *None*
CO^2: *None*
Other Gas: *None*
Fire Protection: *Sprinkler Heads*

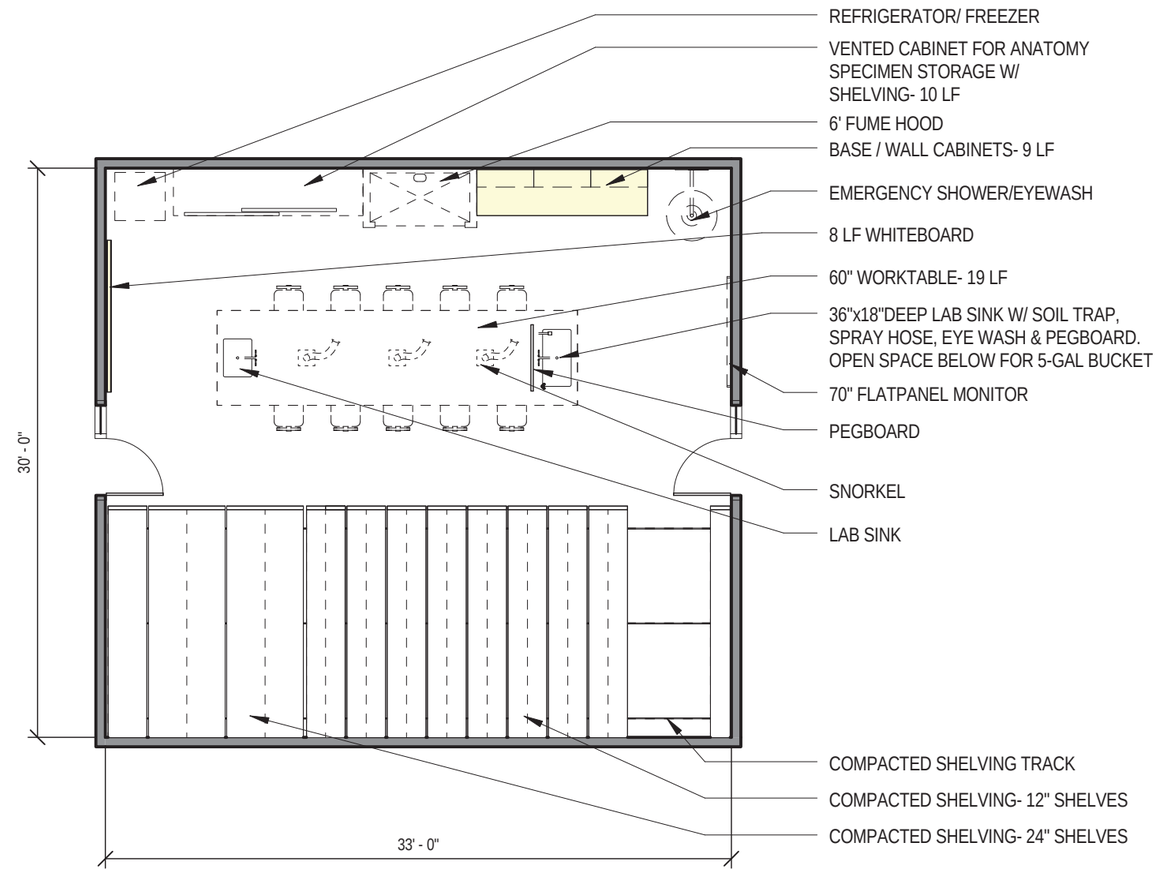

Equipment

Type	Count	Status
6' Fume Hood	1	1
70" Flat Panel Monitor. Wall mounted	1	3
Lab Snorkel	3	1
Refrigerator/ Freezer	1	3

Furniture

Type	Count	Status
60" Worktable- 19 LF	1	3
Compacted Shelving- 12" shelves back-to-back	1	3
Compacted Shelving- 24" shelves back-to-back	1	3
Lab Chair	10	3
Vented Specimen Cabinet- 10 LF	1	1

Status Key: **1** = Furnished and Installed by Contractor (CFCI), **2** = Furnished by Owner, Contractor Installed (OFCI), **3** = Furnished and Installed by Owner (OFOI), **4** = Provided Outside of Project Budget

Scale: 1/8" = 1'-0"

CRSA PAYETTE

9.1.5 Vending

Room Data Sheet Detail

Department: 9.1 Shared/Common
Issue Date:
Room No: *NA*

Space Information

Room Function: *Vending machines off hallway*
Adjacencies: *Centralized location*
Access: *Public*
Room Utilization *M-F 7:30 am-10:30 pm*
General Notes:

Special Requirements

Lighting Controls: *See Proj. Standards, Ch. 3*
Acoustic Req: *See accoustics narrative, Ch. 4*
Structural Req: *None*
Security: *Locked*
Other Spec Req:

Room Size and Capacity

Proposed Area: *120*
Total Area: *120 SF*
Room Quantity: *2*
Assigned Cap: *0*
Unassigned Cap: *1*
Total Cap: *1*

Finishes, Doors and Windows

Floor: *Linoleum*
Base: *Rubber*
Walls: *Gypsum drywall*
Wall Finish: *Paint - low v.o.c.*
Ceiling: *ACT (2'x2')*
Ceiling Height: *Varies*

Door Size: *None*
Door Type: *None*
Door Vis Panel: *None*
Window Treat: *None*
Window Skylight: *None*

Casework and Built-ins

Wall Cabinets: *None*
Base Cabinets: *None*
Counter Tops: *None*
Counter (LF): *None*
Counter Height: *None*

Shelving (LF): *None*
Drawer Units: *None*
White Boards: *None*
Tack Boards *None*
Proj. Screen: *None*

Communications

See Project Design Standards in Chapter 3 and electrical/telecomm narrative in Chapter 4

HVAC

Air Changes: *Office standard*
Air Circulation: *Air may be returned*
Pressure: *Neutral*
Temperature: *Office standard*
Rel. Humidity: *Office standard*
Local Exhaust: *No*
Air Filtration: *MERV 8 / MERV 13*
CO2 Sensor: *No*
Distribution: *Shared Tstat & VAV Box*
Other HVAC: *N/A*

Electrical

See Project Design Standards in Chapter 3 and electrical/telecomm narrative in Chapter 4

Plumbing

Sinks: *None*
Pure Water: *None*
Hot/Cold Water: *None*
Hose Bibb: *None*
Floor Drain: *None*
Waste: *Yes*
Emer. Eyewash: *None*
Emer. Station: *None*
Gases:
Comp. Air: *None*
Lab Gas: *None*
Vacuum: *None*
CO^2: *None*
Other Gas: *None*
Fire Protection: *Sprinkler Heads*

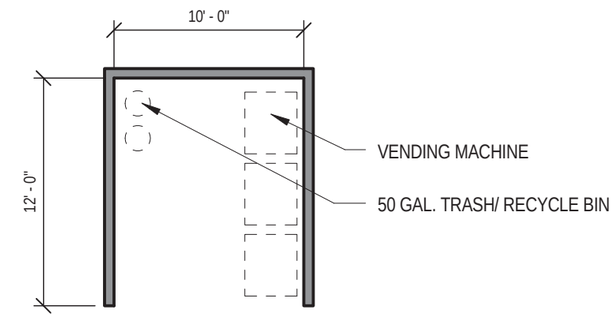

Equipment

Type	Count	Status
Vending Machine	3	4

Furniture

Type	Count	Status
50 gal Trash / Recycle Bin	2	3

Status Key: **1** = Furnished and Installed by Contractor (CFCI), **2** = Furnished by Owner, Contractor Installed (OFCI), **3** = Furnished and Installed by Owner (OFOI), **4** = Provided Outside of Project Budget

Scale: 1/8" = 1'-0"

CRSA PAYETTE

9.2.1 Attic Stock Storage

Room Data Sheet Detail

Department: 9.2 Service
Issue Date:
Room No: *NA*

Space Information

Room Function: *Storage*
Adjacencies: *9.2.5*
Access: *Staff only*
Room Utilization *M-F 7:30 am-10:30 pm*
General Notes:

Special Requirements

Lighting Controls: *See Proj. Standards, Ch. 3*
Acoustic Req: *See accoustics narrative, Ch. 4*
Structural Req: *None*
Security: *Locked*
Other Spec Req:

Room Size and Capacity

Proposed Area: *220*
Total Area: *220 SF*
Room Quantity: *1*
Assigned Cap: *0*
Unassigned Cap: *1*
Total Cap: *1*

Finishes, Doors and Windows

Floor: *Linoleum*
Base: *Rubber*
Walls: *Gypsum drywall*
Wall Finish: *Paint - low v.o.c.*
Ceiling: *ACT (2'x2')*
Ceiling Height: *Varies*

Door Size: *3'-0" Single leaf*
Door Type: *Wood*
Door Vis Panel: *None*
Window Treat: *None*
Window Skylight: *None*

Casework and Built-ins

Wall Cabinets: *None*
Base Cabinets: *None*
Counter Tops: *None*
Counter (LF): *None*
Counter Height: *None*

Shelving (LF): *None*
Drawer Units: *None*
White Boards: *None*
Tack Boards *None*
Proj. Screen: *None*

Communications

See Project Design Standards in Chapter 3 and electrical/telecomm narrative in Chapter 4

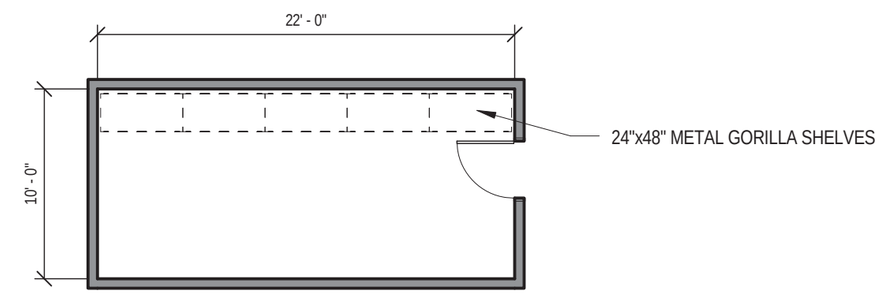

HVAC

Air Changes: *Office standard*
Air Circulation: *Air may be returned*
Pressure: *Neutral*
Temperature: *Office standard*
Rel. Humidity: *Office standard*
Local Exhaust: *No*
Air Filtration: *MERV 8 / MERV 13*
CO2 Sensor: *No*
Distribution: *Shared Tstat & VAV Box*
Other HVAC: *N/A*

Electrical

See Project Design Standards in Chapter 3 and electrical/telecomm narrative in Chapter 4

Plumbing

Sinks: *None*
Pure Water: *None*
Hot/Cold Water: *None*
Hose Bibb: *None*
Floor Drain: *None*
Waste: *None*
Emer. Eyewash: *None*
Emer. Station: *None*
Gases:
Comp. Air: *None*
Lab Gas: *None*
Vacuum: *None*
CO^2: *None*
Other Gas: *None*
Fire Protection: *Sprinkler Heads*

Equipment

Furniture

Type	Count	Status
24"x48" Metal Gorilla Shelves	5	3

Status Key: **1** = Furnished and Installed by Contractor (CFCI), **2** = Furnished by Owner, Contractor Installed (OFCI), **3** = Furnished and Installed by Owner (OFOI), **4** = Provided Outside of Project Budget

Scale: 1/8" = 1'-0"

CRSA PAYETTE

9.2.2 Snow Equipment Storage

Room Data Sheet Detail

Department: 9.2 Service
Issue Date:
Room No: *NA*

Space Information

Room Function: *Snow blower storage*
Adjacencies: *Open to exterior*
Access: *Staff only*
Room Utilization *M-F 7:30 am-10:30 pm*
General Notes:

Special Requirements

Lighting Controls: *See Proj. Standards, Ch. 3*
Acoustic Req: *See accoustics narrative, Ch. 4*
Structural Req: *None*
Security: *Locked*
Other Spec Req:

Room Size and Capacity

Proposed Area: *60*
Total Area: *60 SF*
Room Quantity: *1*
Assigned Cap: *0*
Unassigned Cap: *1*
Total Cap: *1*

Finishes, Doors and Windows

Floor: *Linoleum*
Base: *Rubber*
Walls: *Gypsum drywall*
Wall Finish: *Paint - low v.o.c.*
Ceiling: *ACT (2'x2')*
Ceiling Height: *Varies*

Door Size: *3'-0" Single leaf*
Door Type: *Hollow metal*
Door Vis Panel: *None*
Window Treat: *None*
Window Skylight: *None*

Casework and Built-ins

Wall Cabinets: *None*
Base Cabinets: *None*
Counter Tops: *None*
Counter (LF): *None*
Counter Height: *None*

Shelving (LF): *None*
Drawer Units: *None*
White Boards: *None*
Tack Boards *None*
Proj. Screen: *None*

Communications

See Project Design Standards in Chapter 3 and electrical/telecomm narrative in Chapter 4

HVAC

Air Changes: *Office standard*
Air Circulation: *Air may be returned*
Pressure: *Neutral*
Temperature: *Office standard*
Rel. Humidity: *Office standard*
Local Exhaust: *N/A*
Air Filtration: *MERV 8 / MERV 13*
CO2 Sensor: *No*
Distribution: *Shared Tstat & VAV Box*
Other HVAC: *N/A*

Electrical

See Project Design Standards in Chapter 3 and electrical/telecomm narrative in Chapter 4

Plumbing

Sinks: *None*
Pure Water: *None*
Hot/Cold Water: *None*
Hose Bibb: *None*
Floor Drain: *None*
Waste: *Yes*
Emer. Eyewash: *None*
Emer. Station: *None*
Gases:
Comp. Air: *None*
Lab Gas: *None*
Vacuum: *None*
CO^2: *None*
Other Gas: *None*
Fire Protection: *Sprinkler Heads*

Equipment

Furniture

Type	Count	Status
18"x36" Metal Gorilla Shelves	2	3

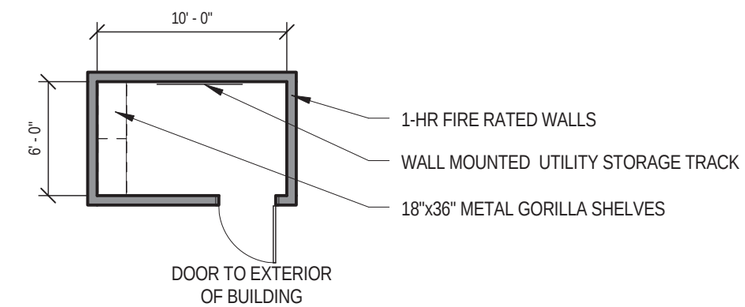

Status Key: **1** = Furnished and Installed by Contractor (CFCI), **2** = Furnished by Owner, Contractor Installed (OFCI), **3** = Furnished and Installed by Owner (OFOI), **4** = Provided Outside of Project Budget

Scale: 1/8" = 1'-0"

CRSA PAYETTE

9.2.5 Loading / Receiving

Room Data Sheet Detail

Department: 9.2 Service
Issue Date:
Room No: *NA*

Space Information

Room Function:
Adjacencies: *Loading / Receiving Dock 9.3.8, Attic Stock Storage 9.2.1*
Access: *Staff only*
Room Utilization *M-F 7:30 am-10:30 pm*
General Notes:

Special Requirements

Lighting Controls: *See Proj. Standards, Ch. 3*
Acoustic Req: *See accoustics narrative, Ch. 4*
Structural Req: *None*
Security: *Locked*
Other Spec Req:

Room Size and Capacity

Proposed Area: *500*
Total Area: *500 SF*
Room Quantity: *2*
Assigned Cap: *0*
Unassigned Cap: *1*
Total Cap: *1*

Finishes, Doors and Windows

Floor: *Linoleum*
Base: *Rubber*
Walls: *Gypsum drywall*
Wall Finish: *Paint - low v.o.c.*
Ceiling: *ACT (2'x2')*
Ceiling Height: *Varies*

Door Size: *(2) 3'-6" single leaf*
Door Type: *None*
Door Vis Panel: *None*
Window Treat: *None*
Window Skylight: *None*

Casework and Built-ins

Wall Cabinets: *None*
Base Cabinets: *None*
Counter Tops: *None*
Counter (LF): *None*
Counter Height: *None*

Shelving (LF): *None*
Drawer Units: *None*
White Boards: *None*
Tack Boards *None*
Proj. Screen: *None*

Communications

See Project Design Standards in Chapter 3 and electrical/telecomm narrative in Chapter 4

HVAC

Air Changes: *Office standard*
Air Circulation: *Air may be returned*
Pressure: *Neutral*
Temperature: *Office standard*
Rel. Humidity: *Office standard*
Local Exhaust: *N/A*
Air Filtration: *MERV 8 / MERV 13*
CO2 Sensor: *No*
Distribution: *Shared Tstat & VAV Box*
Other HVAC: *N/A*

Electrical

See Project Design Standards in Chapter 3 and electrical/telecomm narrative in Chapter 4

Plumbing

Sinks: *None*
Pure Water: *None*
Hot/Cold Water: *None*
Hose Bibb: *None*
Floor Drain: *None*
Waste: *Yes*
Emer. Eyewash: *None*
Emer. Station: *None*
Gases:
Comp. Air: *None*
Lab Gas: *None*
Vacuum: *None*
CO^2: *None*
Other Gas: *None*
Fire Protection: *Sprinkler Heads*

Equipment

Furniture

Type	Count	Status
18"x48" Metal Gorilla Shelves	4	3

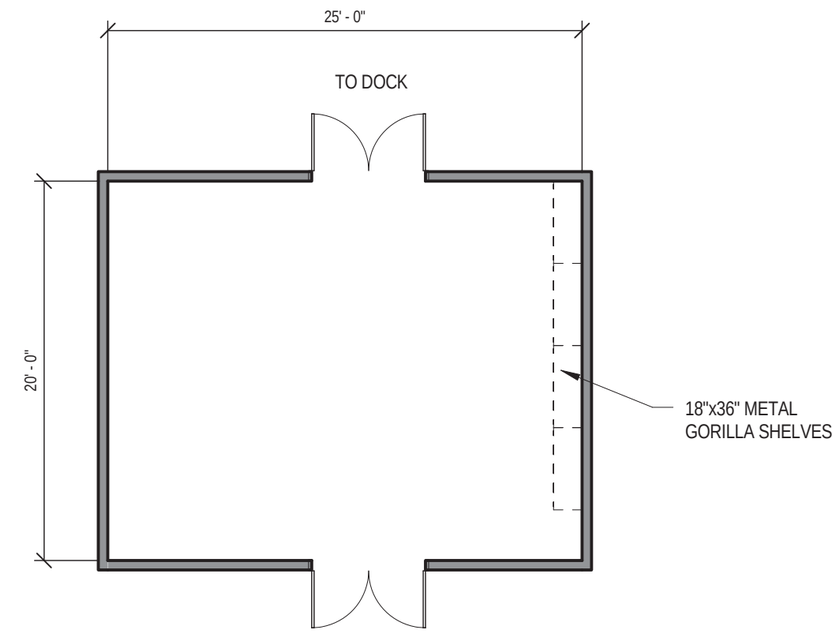

Status Key: **1** = Furnished and Installed by Contractor (CFCI), **2** = Furnished by Owner, Contractor Installed (OFCI), **3** = Furnished and Installed by Owner (OFOI), **4** = Provided Outside of Project Budget

Scale: 1/8" = 1'-0"

CRSA PAYETTE

9.3.8 Loading Dock

Room Data Sheet Detail

Department: Building Shared
Issue Date: WORK IN PROGRESS
Room No:

Space Information

Room Function: *Building support*
Adjacencies: *See Adjacency Diagrams*
Access: *Admin*
Room Utilization *8:00AM to 5:00PM*
General Notes:

Special Requirements

Lighting Controls: *See Proj. Standards, Ch. 3*
Acoustic Req: *See acoustics narrative, Ch. 4*
Structural Req: *None*
Security: *Locked*
Other Spec Req:

Room Size and Capacity

Proposed Area: *360 SF*
Total Area: *360 SF*
Room Quantity: *1*
Assigned Cap: *0*
Unassigned Cap: *3*
Total Cap: *3*

Finishes, Doors and Windows

Floor: *Sealed Concrete*
Base: *Resilient, Cove*
Walls: *Gyp. Bd.*
Wall Finish: *Paint*
Ceiling: *ACT (2'x2')*
Ceiling Height:

Door Size: *As noted*
Door Type: *Hollow metal, painted*
Door Vis Panel: *None*
Window Treat: *None*
Window Skylight: *None*

Casework and Built-ins

Wall Cabinets: *None*
Base Cabinets: *None*
Counter Tops: *None*
Counter (LF): *See diagram*
Counter Height: *None*

Shelving (LF): *None*
Drawer Units: *None*
White Boards: *None*
Tack Boards *None*
Proj. Screen: *None*

Communications

See Project Design Standards in Chapter 3 and electrical/telecomm narrative in Chapter 4

HVAC

Air Changes: *N/A*
Air Circulation: *N/A*
Pressure: *N/A*
Temperature: *N/A*
Rel. Humidity: *N/A*
Local Exhaust: *N/A*
Air Filtration: *N/A*
CO2 Sensor: *N/A*
Distribution: *N/A*
Other HVAC:

Electrical

See Project Design Standards in Chapter 3 and electrical/telecomm narrative in Chapter 4

Plumbing

Sinks: *None*
Pure Water: *None*
Hot/Cold Water: *None*
Hose Bibb: *None*
Floor Drain: *None*
Waste: *None*
Emer. Eyewash: *None*
Emer. Station: *None*
Gases:
Comp. Air: *None*
Lab Gas: *None*
Vacuum: *None*
CO^2: *None*
Other Gas:
Fire Protection: *Wet Sprinkler*

Equipment

Type	Count	Status

Furniture

Type	Count	Status

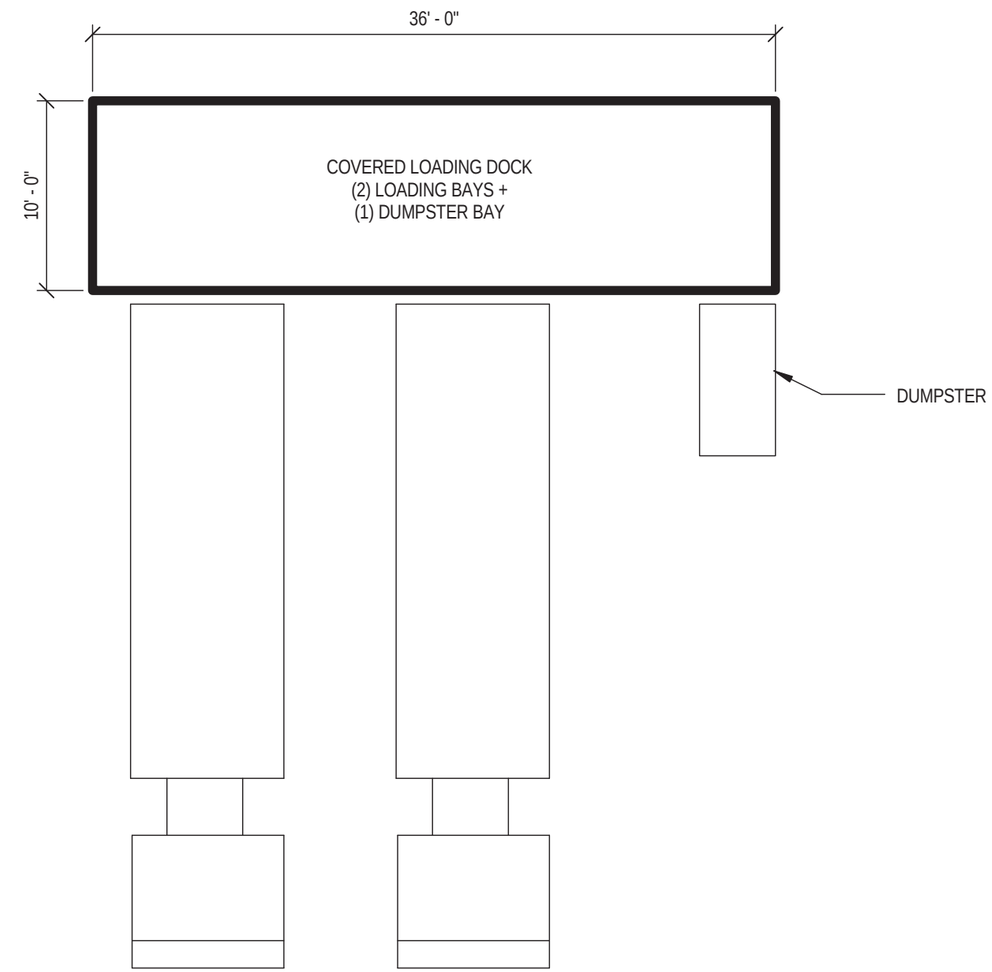

Scale: 1/8" = 1'-0"

Status Key: **1** = Furnished and Installed by Contractor (CFCI), **2** = Furnished by Owner, Contractor Installed (OFCI), **3** = Furnished and Installed by Owner (OFOI), **4** = Provided Outside of Project Budget

CRSA PAYETTE

9.3.9 Cylinder Storage

Room Data Sheet Detail

Department: 9.3 Utility
Issue Date:

Room No: *NA*

Space Information

Room Function: *Storage*
Adjacencies: *9.3.8, 9.2.5*
Access: *Staff, Faculty*
Room Utilization *M-F 7:30 am-10:30 pm*
General Notes:

Special Requirements

Lighting Controls: *See Proj. Standards, Ch. 3*
Acoustic Req: *See accoustics narrative, Ch. 4*
Structural Req: *None*
Security: *Locked*
Other Spec Req:

Room Size and Capacity

Proposed Area: *80*
Total Area: *84 SF*
Room Quantity: *2*
Assigned Cap: *0*
Unassigned Cap: *1*
Total Cap: *1*

Finishes, Doors and Windows

Floor: *Linoleum*
Base: *Rubber*
Walls: *Gypsum drywall*
Wall Finish: *Paint - low v.o.c.*
Ceiling: *ACT (2'x2')*
Ceiling Height: *Varies*

Door Size: *3'-0" Single leaf*
Door Type: *Hollow metal*
Door Vis Panel: *None*
Window Treat: *None*
Window Skylight:

Casework and Built-ins

Wall Cabinets:
Base Cabinets:
Counter Tops:
Counter (LF):
Counter Height:

Shelving (LF):
Drawer Units:
White Boards: *Yes*
Tack Boards *No*
Proj. Screen: *Yes*

Communications

See Project Design Standards in Chapter 3 and electrical/telecomm narrative in Chapter 4

HVAC

Air Changes:
Air Circulation: *Air may be returned*
Pressure:
Temperature:
Rel. Humidity:
Local Exhaust: *N/A*
Air Filtration:
CO2 Sensor:
Distribution:
Other HVAC:

Electrical

See Project Design Standards in Chapter 3 and electrical/telecomm narrative in Chapter 4

Plumbing

Sinks:
Pure Water:
Hot/Cold Water:
Hose Bibb:
Floor Drain:
Waste:
Emer. Eyewash:
Emer. Station:
Gases:
Comp. Air:
Lab Gas:
Vacuum:
CO^2:
Other Gas:
Fire Protection: *Sprinkler Heads*

Equipment

Furniture

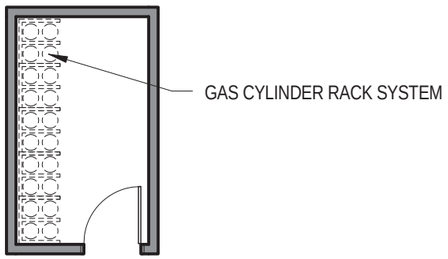

Status Key: **1** = Furnished and Installed by Contractor (CFCI), **2** = Furnished by Owner, Contractor Installed (OFCI), **3** = Furnished and Installed by Owner (OFOI), **4** = Provided Outside of Project Budget

Scale: 1/8" = 1'-0"

CRSA PAYETTE

PROPOSED SOLUTION

4.1 Site

No specific site design is currently presented, as there are a number of factors to be studied and confirmed in future design phases that will influence the proposed landscape and site plan. Considerations that will influence the proposed solution include:

- A bridge connection between the new building and the BNR will not be included as part of the project, but may be considered for the future. If the bridge is eventually to be constructed, a major part of the site design will center on the outside courtyard space and entrance to the two buildings as a single complex. However, if the bridge is eliminated from consideration, the main entrance of the new building may be better located at a different point, thereby impacting the site treatment around it.
- Maintaining recognition of the east-west pedestrian walkway running along the south edge of BNR between the Merrill-Cazier Library and the Taggart Student Center as a major throughway for student traffic
- Exploring the proximity of the new building to the major north-south pedestrian mall and how much the building entrance and external/internal circulation should engage the mall
- Studying the possibility of a "science plaza" space between the BNR and new building
- Status of selected existing special trees: The current understanding is that the "Bob Hope" trees in front of the southeast BNR entrance will remain, and that the Austrian Pine and Bald Cypress trees at the northern edge of the new building site will be relocated to another place to be determined on the campus.

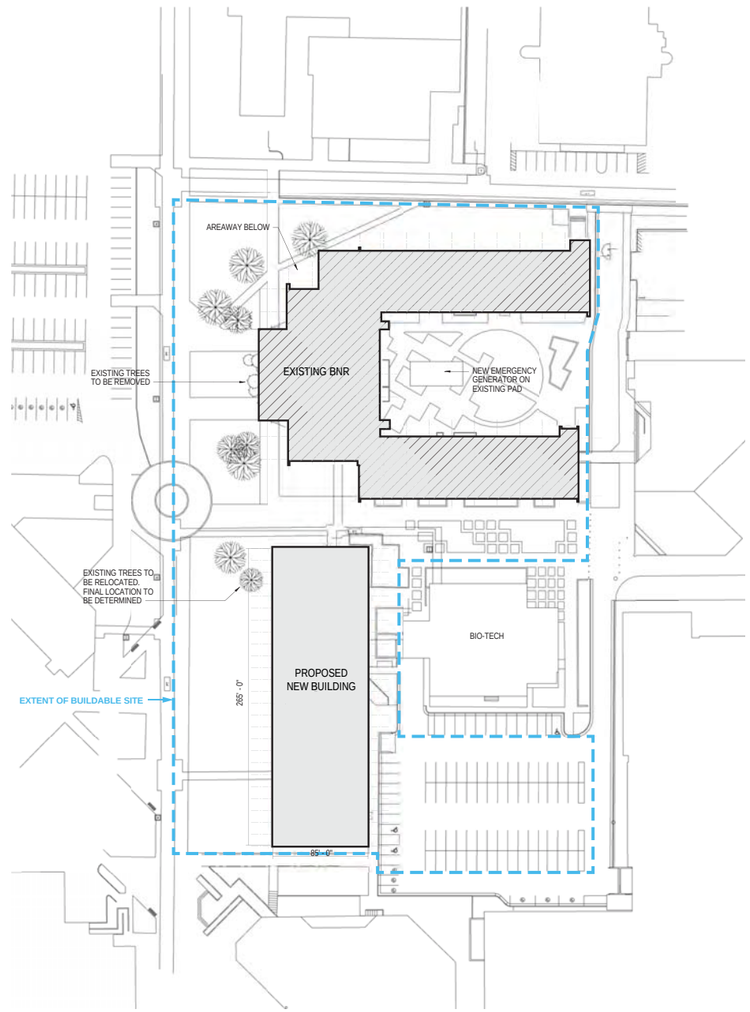

Existing Site Plan with Proposed Building Footprint

Site Photo

Site Photo

4.2 Blocking and Stacking Diagrams

The following diagrams show the proposed organizational relationships among the different program components in both the new building and BNR.

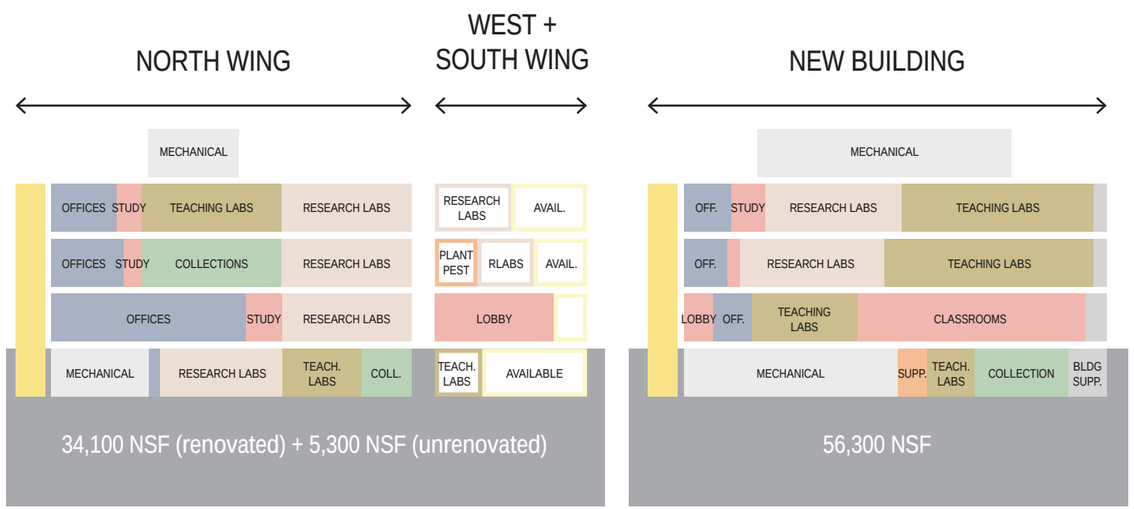

Blocking Diagram

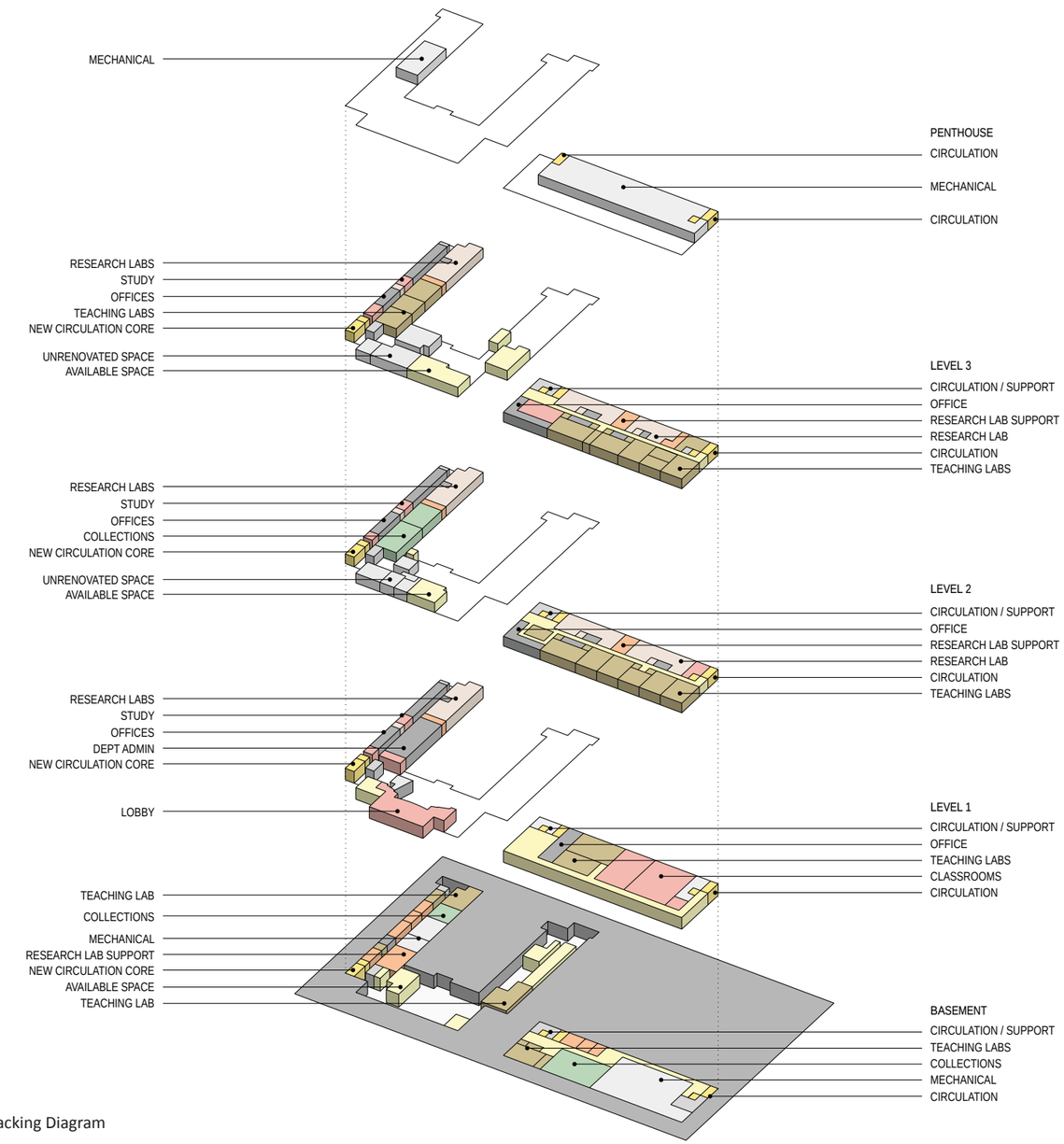

Stacking Diagram

CRSA PAYETTE

4.3 Renderings and Massing Diagram

The renderings shown here were done for presentation to the USU Board of Regents during the early stages of the study. Because the timing of the presentation did not coincide with the full development of the program or concept plan, the images were by necessity created out of context with the building study. They should therefore be treated as representational images only, not actual building designs.

The massing diagram illustrates the overall size and placement of the new building and BNR additions in relation to the surrounding site.

Exterior Rendering

Interior Rendering

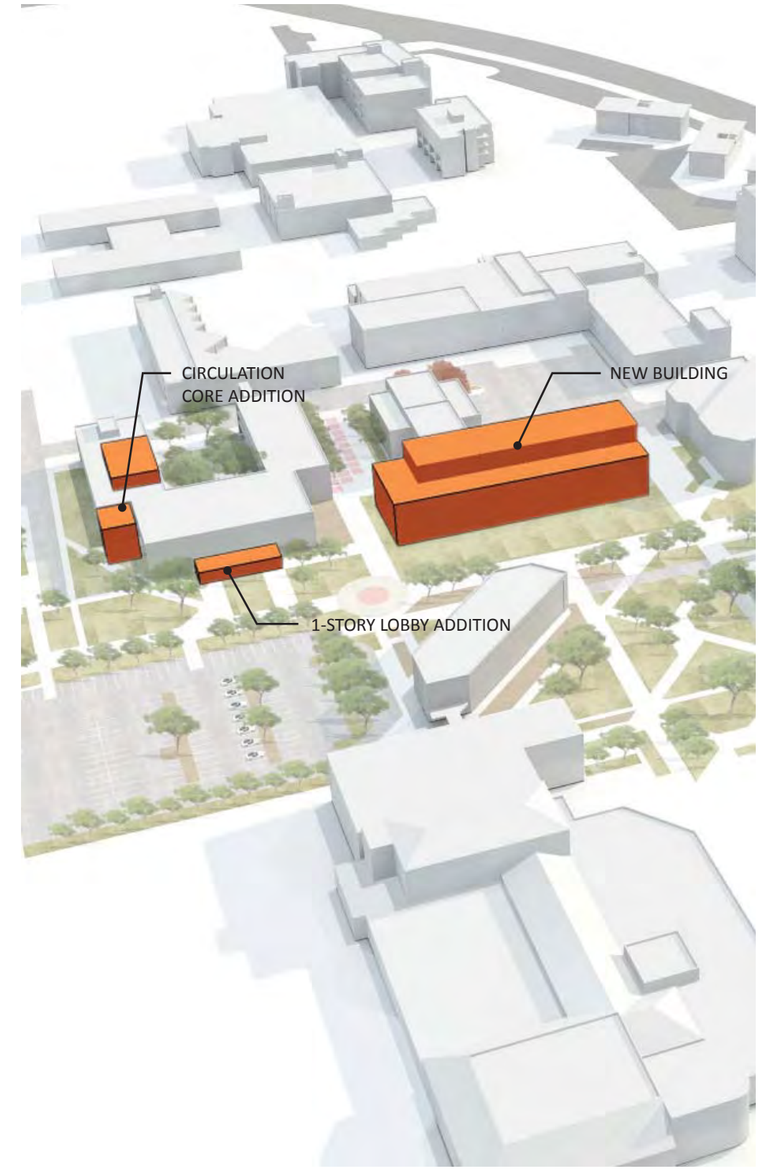

Massing Diagram

4.4 Architectural Approach

The concept plan proposes a new three-story building with a basement level and an enclosed mechanical penthouse above. The penthouse is set back from the west and north edges of the building to visually diminish its mass. The three-story scheme maintains the character of the facility as a walk-up building which fosters more interaction among its occupants. In addition, a taller building would obstruct much of the view of the mountains beyond from several vantage points on campus. The surrounding buildings are also generally at the lower three-story height, which allows consistent views to the mountains beyond.

The entrance to the new building is located at the north end of the building. If a bridge connection between the new building and BNR is built in the future, this entrance can reinforce the sense of a larger area that includes the outside space between the two buildings and acts as science plaza and entry to a science complex. However, if the bridge is eliminated from consideration, and the two buildings remain truly stand-alone structures, the entrance to the new building may be better placed along the west façade away from the end of the building in order to integrate it more into the public circulation of the new building.

The new building and BNR remodel plans distribute student spaces, meeting rooms, and informal gathering spots throughout the floors. The lack of such spaces in the BNR is a major deficiency in the current building. Further opportunities will be explored in subsequent design phases for vertical connections among floors as well, both visual and physical. In the BNR, the addition of a stair and elevator tower at the northwest corner affords the opportunity to extend the main east-west corridor in the north wing to a point where it meets the west wing corridor directly, thereby simplifying the internal circulation path. It also allows for the placement of a window at the end of the corridor, enhancing the connection to the exterior.

The teaching labs are placed together in groupings where, for example, prep rooms that serve multiple labs can be centrally located for efficiency of service. Certain lab adjacencies are also set up based on functional synergies such as the colocation of the Cadaver Lab, Human Anatomy Lab and Human Physiology Lab on the BNR third floor.

For research spaces, rather than provide traditional individual labs in separate rooms, as in the BNR, the new labs are proposed to be arranged in suites for three researchers each. Each suite features an open lab bench area with a fume hood and equipment space that can be shared among the researchers, with adjoining closed rooms or alcoves that accommodate specialized needs for individuals. This layout was discussed at length in the user meetings, and was viewed very favorably because of the efficiency gained in sharing bench space and commonly accessed hoods and equipment, while providing spaces used solely by an individual researcher with specific set-ups and procedures.

It is anticipated that the north wing of the existing BNR building will undergo a comprehensive demolition and renovation. All existing mechanical, electrical and architectural finishes should be removed from this wing, including the curtain wall window system, leaving only the structural shell.

From this point, a new lateral force-resisting structural system should be added to the existing structure of the north wing. In sequence with the removal of the existing curtain wall, new steel braced frames should be added to the existing structure along the north and south facades.

At the east and west facades, existing CMU shear walls should be upgraded in one of two ways: firstly, a carbon fiber system can be added to the interior face of the CMU walls; secondly the existing veneer (brick or precast conc) can be removed from the outside and replaced with reinforced concrete which will then become the exterior finish of the building. The pros and cons of both methods, including cost comparisons, should be explored during the schematic design phase.

A new high-performance wall/glazing system should be installed on the exterior of the north wing. This should include a stud wall with continuous insulation and an air barrier on the exterior as well as a high-performance glazing system with thermally-broken window frames. The insulating glass should meet the state requirements for Solar Heat Gain Coefficient, U-value and Visible Light Transmittance. The system should allow views directly out of the labs to the exterior, currently this is not an option with the existing clerestory windows. The window system design should also incorporate shading devices to cut direct heat gain during the summer months, but allow some sun to assist with comfort in the winter.

All these new building interventions will greatly increase the energy efficiency of this wing in alignment with LEED and the State's High-Performance Building Requirements. It is anticipated that the State will hire an envelope consultant and a commissioning agent, both of whom will review the design teams work and make recommendations to increase efficiencies where applicable.

The proposed building plans and a diagrammatic section are illustrated in the following pages.

GEN EQUIP STORAGE 301 SF
BUIDING SUPPORT 317 SF
COLD ROOM 128 SF
GROWTH CHAMBERS 360 SF
FREEZER 288 SF
AUTOCLAVE 318 SF
FIELD EQUIP. 152 SF
DEPT ADM 236 SF
FIELD EQUIP. 337 SF
NEW MECH 910 SF
EXIST MECH 1392 SF
ANIMAL HOLDING 1503 SF
TOILET 248 SF
AVAILABLE 155 SF
AVAILABLE 1096 SF
VERT COLLECTION 1024 SF
VERTEBRATE TEACHING LAB 1444 SF
AVAILABLE 744 SF
AVAILABLE 1510 SF
HYDROLOGY LAB 1794 SF
AVAILABLE 497 SF
NEW AREAWAY FOR ELECTRICAL TRANSFORMERS
SPACE TYPE LEGEND
ASSEMBLY / CLASSROOM
OFFICE
TEACHING LAB
RESEARCH LAB
RESEARCH LAB SUPPORT
COLLECTIONS / HERBARIUM
BUILDING SUPPORT
MECHANICAL
UNRENOVATED SPACE, RETAINED BY BIO DEPT
UNRENOVATED SPACE, VACATED BY BIO
TOILET
TOILET
FREEZER FARM 531 SF
GROWTH CHAMBERS 393 SF
AUTOCLAVE 310 SF
ALCOVE 118 SF
PLANT / INSECT TLAB SUPPORT 1281 SF
221 SF
SPECIMEN STORAGE 315 SF
HERBARIUM 3731 SF
MECHANICAL 8745 SF
BUILDING SUPPORT 880 SF
LINE OF OPENING ABOVE
1
LEVEL 0 PLAN
SCALE: 1" = 40'-0"
CONSENSUS SOLUTION
SCALE: 1" = 40'-0"
DRAFT 02/22/2016
CRSA PAYETTE

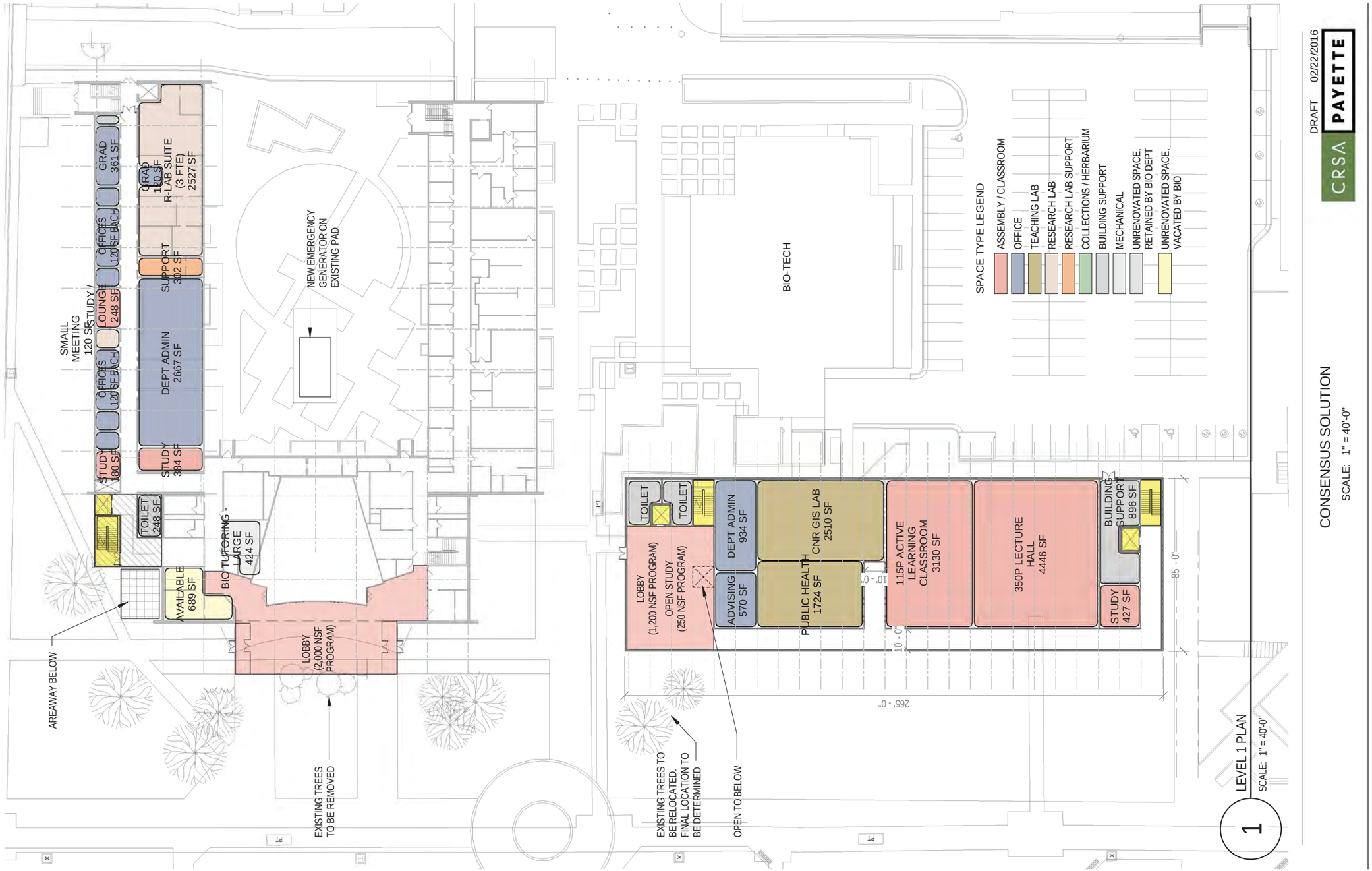
SMALL MEETING 120 SF
STUDY / LOUNGE 248 SF
OFFICES 120 SF EACH
GRAD 361 SF
STUDY 180 SF
OFFICES 120 SF EACH
DEPT ADMIN 2667 SF
SUPPORT 302 SF
GRAD 130 SF
R-LAB SUITE (3 FTE) 2527 SF
STUDY 384 SF
TOILET 248 SF
AVAILABLE 689 SF
BIO TUTORING - LARGE 424 SF
LOBBY (2,000 NSF PROGRAM)
NEW EMERGENCY GENERATOR ON EXISTING PAD
AREAWAY BELOW
EXISTING TREES TO BE REMOVED
BIO-TECH
SPACE TYPE LEGEND
ASSEMBLY / CLASSROOM
OFFICE
TEACHING LAB
RESEARCH LAB
RESEARCH LAB SUPPORT
COLLECTIONS / HERBARIUM
BUILDING SUPPORT
MECHANICAL
UNRENOVATED SPACE, RETAINED BY BIO DEPT
UNRENOVATED SPACE, VACATED BY BIO
TOILET
TOILET
LOBBY (1,200 NSF PROGRAM) OPEN STUDY (250 NSF PROGRAM)
DEPT ADMIN 934 SF
ADVISING 570 SF
CNR GIS LAB 2510 SF
PUBLIC HEALTH 1724 SF
115P ACTIVE LEARNING CLASSROOM 3130 SF
350P LECTURE HALL 4446 SF
BUILDING SUPPORT 896 SF
STUDY 427 SF
10' - 0"
10' - 0"
85' - 0"
265' - 0"
EXISTING TREES TO BE RELOCATED. FINAL LOCATION TO BE DETERMINED
OPEN TO BELOW
1
LEVEL 1 PLAN
SCALE: 1" = 40'-0"
CONSENSUS SOLUTION
SCALE: 1" = 40'-0"
DRAFT 02/22/2016
CRSA PAYETTE

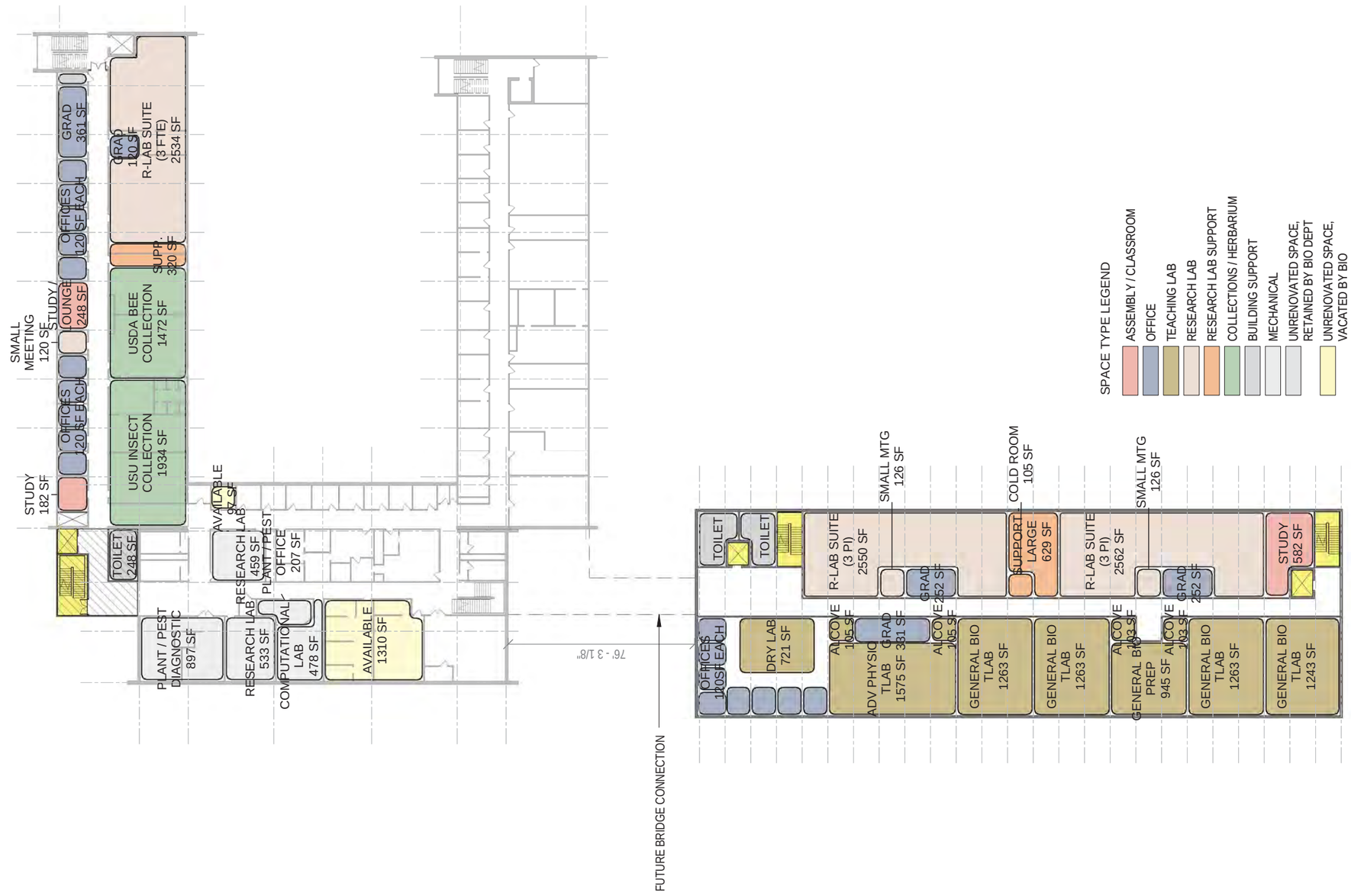

2 LEVEL 2 PLAN
SCALE: 1" = 40'-0"

CONSENSUS SOLUTION
SCALE: 1" = 40'-0"

DRAFT 02/22/2016

CRSA PAYETTE

SMALL MEETING 120 SF
STUDY / LOUNGE 248 SF
OFFICES 120 SF EACH
GRAD 238 SF
HUMAN PHYSIOLOGY 1248 SF
SUPP. 330 SF
GRAD 180 SF
R-LAB SUITE (3 FTE) 2534 SF
TUTORING
SMALL 314 SF
OFFICES 120 SF EACH
HUMAN ANATOMY 960 SF
CADAVER LAB 1146 SF
TOILET 248 SF
RESEARCH LAB 1554 SF
AVAILABLE 370 SF
AVAILABLE 1469 SF
COMPUTATIONAL LAB 528 SF
RESEARCH LAB 1927 SF
AVAILABLE 2090 SF
FUTURE BRIDGE CONNECTION
TOILET
TOILET
SMALL MTG 126 SF
COLD ROOM 105 SF
SMALL MTG 126 SF
COLD ROOM 105 SF
DRY LAB 811 SF
OFFICES 120 SF EACH
STUDY 1456 SF
GRAD 126 SF
ALCOVE 105 SF
GRAD 252 SF
R-LAB SUITE (3 PI) 2553 SF
BSL-2 629 SF
GRAD 126 SF
R-LAB SUITE (2 PI) 1849 SF
SUPPORT - SMALL 368 SF
BUILDING SUPPORT
ECOLOGY 1575 SF
GRAD 318 SF
ALCOVE 103 SF
SUPPORT 315 SF
ALCOVE 103 SF
CELL / MOL BIO / GENETICS 1260 SF
GRAD 212 SF
ALCOVE 105 SF
MICROBIO TLAB 1263 SF
MEDIA PREP STORAGE 630 SF
MICROBIO MEDIA PREP 630 SF
MICROBIO TLAB 1240 SF
SPACE TYPE LEGEND
ASSEMBLY / CLASSROOM
OFFICE
TEACHING LAB
RESEARCH LAB
RESEARCH LAB SUPPORT
COLLECTIONS / HERBARIUM
BUILDING SUPPORT
MECHANICAL
UNRENOVATED SPACE, RETAINED BY BIO DEPT
UNRENOVATED SPACE, VACATED BY BIO
3
LEVEL 3 PLAN
SCALE: 1" = 40'-0"
CONSENSUS SOLUTION
SCALE: 1" = 40'-0"
DRAFT 02/22/2016
CRSA PAYETTE

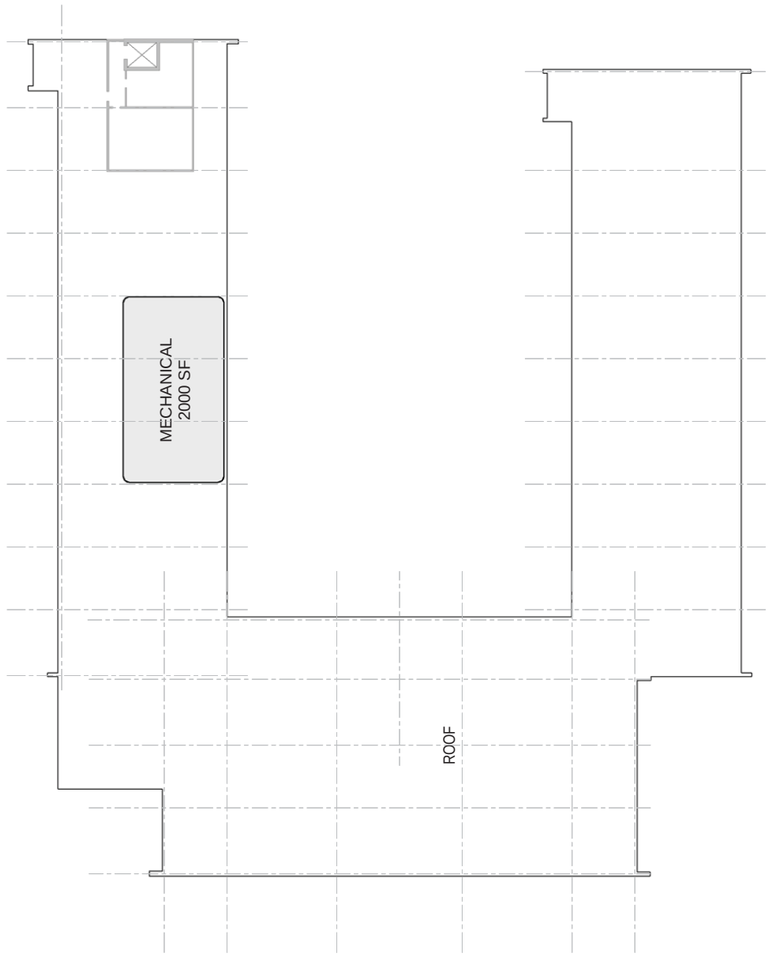

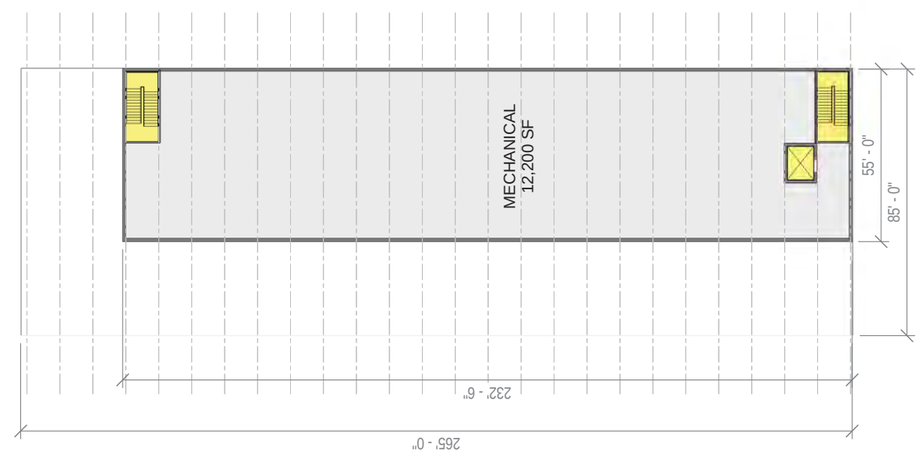

SPACE TYPE LEGEND

- ASSEMBLY / CLASSROOM
- OFFICE
- TEACHING LAB
- RESEARCH LAB
- RESEARCH LAB SUPPORT
- COLLECTIONS / HERBARIUM
- BUILDING SUPPORT
- MECHANICAL
- UNRENOVATED SPACE, RETAINED BY BIO DEPT
- UNRENOVATED SPACE, VACATED BY BIO

4

LEVEL 4 - ROOF (EXISTING)
SCALE: 1" = 40'-0"

CONSENSUS SOLUTION
SCALE: 1" = 40'-0"

DRAFT 02/22/2016

CRSA PAYETTE

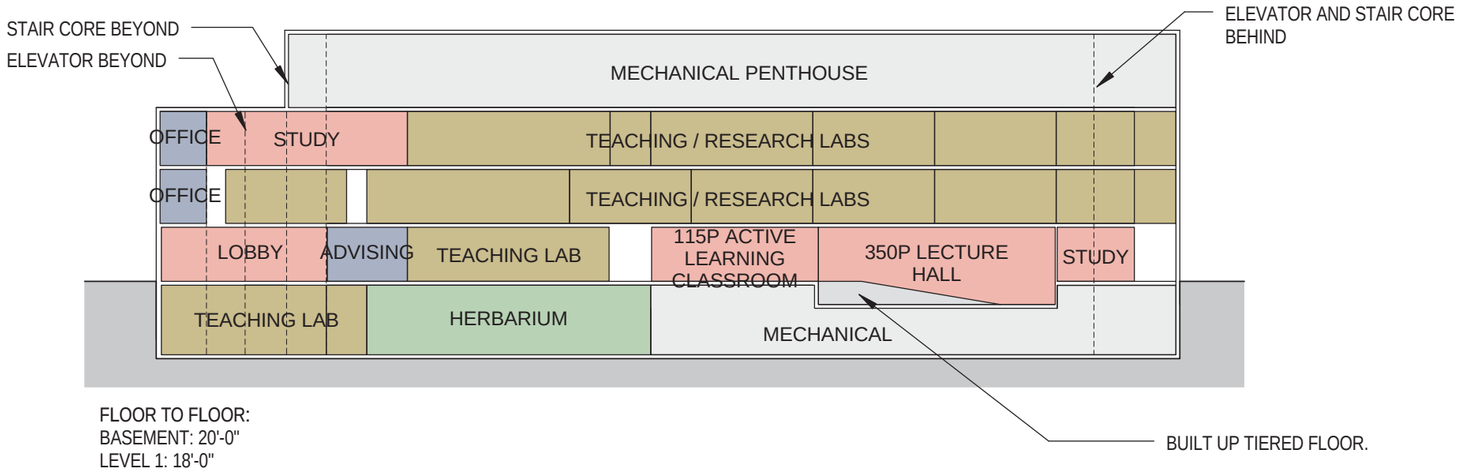

FLOOR TO FLOOR:
BASEMENT: 20'-0"
LEVEL 1: 18'-0"
LEVEL 2/3: 15'-0"
PENTHOUSE: 20'-0"

Diagrammatic Section

4.5 Building Narrative

4.5.1 Architecture (New Building Exterior Finish Considerations)

It is anticipated that the exterior of the new building will include materials that are durable and compatible but not necessarily identical to the surrounding buildings. These may include natural stone, masonry, precast concrete, or other high performance reinforced concrete panels. The exterior wall design will need to balance the high performance criteria related to energy use with desired glass area and overall aesthetics. Studies should be performed to evaluate the advantages and disadvantages of double versus tripled-paned glazing and alternative wall assemblies. Shading and sun control devices should also be evaluated for effectiveness in optimizing light transmittance versus solar gain.

Maintenance of the façade components, window washing, and durability in extreme weather conditions are other considerations for selection of materials and wall construction. Passive and active solar photovoltaic and hot water systems may also be considered.

There is no strong consistent style to the neighboring buildings and the proposed building will generally be set off from the adjoining structures by some visual distance, so there is not a clear contextual force, other than the natural setting with the backdrop of mountains to the east. With this in mind, the design of the exterior wall will account for view opportunities where possible, both to the campus and to the greater landscape.

4.5.2 SUSTAINABILITY / RESILIENCE

USU COMMITMENT TO SUSTAINABILITY

In early 2007, USU President Stan Albrecht signed the American College and University Presidents Climate Commitment, as part of a nationwide movement to reduce global warming by achieving climate neutrality. USU was the first institution of higher education in the state of Utah to sign on to the commitment. The USU Sustainability Council was convened immediately following the signing of the commitment, and was charged with developing strategies to achieve the goals and benchmarks set forth by the Climate Commitment, administered by the Association for the Advancement of Sustainability in Higher Education (AASHE). Since the signing, the university has developed a Sustainability Policy (Policy #106 of the USU Policies Manual). It reads:

Utah State University (USU) is one of the nation's premier, student-centered, land grant, and space-grant universities. The University is committed to enhancing the quality of life for individuals and communities by promoting sustainability in its operations and academic and service missions.

USU will develop appropriate systems for managing environmental, social, and economic sustainability programs with specific goals and objectives. This policy supports the goal of the USU statewide system to prepare students, faculty, and staff to proactively contribute to a high quality of life for present and future generations.

Additionally, USU established a benchmark document to establish its carbon footprint, and is tracking changes annually. The USU Climate Action Plan document outlines key areas of focus and strategies to achieve carbon neutrality by 2050.

Because the USU Climate Action Plan ambitiously aims for climate neutrality by 2050, USU will need to take big steps towards this goal. Commuting and energy usage by buildings are by far the biggest contributors to the university's carbon footprint. Energy efficiency, alternative energy, and alternative transportation strategies will be the major areas of focus in achieving climate neutrality. Culture and educational programs will also play a major role in behavioral shifts.

STATE OF UTAH COMMITMENT TO GREEN BUILDINGS

The State of Utah design requirements states that all new buildings must meet sustainable design standard, known as the High Performance Building System (HPBS). The HPBS is define in Section 5 of the DFCM Design Requirements, including processes, tools, milestone requirements and team definition. Mandates include, but are not limited to the following:

- The owner shall directly hire the energy engineer, building envelope commissioning agent and commissioning agent in the programming phase.
- The Owner, Energy Engineer, Commissioning Agent, and Building Envelope Commissioning Agent, shall provide timely input to the design team related to the OPR, BOD, and related HPBS documentation.
- A HPBS Workshop must be completed during the first half of each phase of the project. Goals, strategies, and performance metrics must be documented in the OPR, BOD, and project documents accordingly. Additional informal HPBS Workshops shall be held to provide clear direction to the project in regards to the requirements of the HPBS.
- The design team shall conduct a building envelop systems meeting, during design development and construction documents phases, to review possible envelope strategies. Topics to review included, but are not limited to, air, thermal and moisture performance, functional performance requirements, constructability, energy efficiency, aesthesis, mock ups, and testing.
- A building envelope commissioning kick off meeting shall be coordinated by the general contractor and BECxA. Required attendees include, Architect, DFCM Energy Program Director, CM/GC and Subcontractors responsible for the following building components when applicable; masonry, insulation, air barrier, cladding, glazing, roofing and others as dictated by the envelop design.
- Testing of building envelope components, on the building mock up, completed with acceptable results prior to installation of said components.

The HPBS will require the following:

- Review of pertinent master planning documents so that building site, open space design and access shall reflect the planning goals
- The building shall reflect the community development patterns and vision, including site, solar access and other climate conditions.
- The façade design shall reflect the solar access and orientation of the site through the integration of shading devices, window location, and scale. Window to wall ratios that are appropriate based on building energy performance, orientation, and interior programming shall be integrated into the design.
- Follow Transportation Management guidelines, including the inclusion of a minimum of 10 secure bike stalls, two reserved carpool, fuel-efficient vehicle and/or low emitting vehicle stalls, and the project shall select a set of approved goals for minimizing single-rider vehicles.
- Selection of energy efficient appliances, equipment, products or furnishings that meet established criteria for energy efficiency.
- Buildings meet minimum energy efficiency and building envelope requirements set by Design Requirements, including plug load and lighting power requirements.
- 35% of building materials, by value, shall meet either LEEDMRc4 or MRc5 requirements. Use of low mercury or LED lamps.
- Follow Indoor Environmental Quality requirements, including the use of: low emitting paint, coating, adhesives/sealants, exhausted janitorial closets, print and copy rooms, and chemical storage spaces, walk-off mats at building entries, daylight and views, and use of task lights at each individual workstation.
- Develop an education and outreach program.
- Follow metering and sub-metering standards. Implement a BMS as per USU and/or DFCM requirements.
- Craft documentation as per commissioning requirements, including OPRs and BODs.

USU Swaner EcoCenter is Utah's first USGBC LEED Platinum and Sustainable SIte certified project

These guidelines incorporate recommendations from ongoing campus initiatives championed by "Blue Goes Green", the USU 2012 Energy Conservation Plan, as well as appropriate national trends and initiatives such as Leadership in Energy and Environmental Design (LEED) and Sustainable Sites Initiative (SITES). USU has successfully constructed sustainable projects on the main and regional campuses and continues to require LEED Silver certification or higher for all new buildings.

Renovation of the BNR Building, construction of the new Biological Sciences Building and significant site development will occur during this project. As such, the following measures will respond to the opportunities for both new construction and with existing facilities and landscapes. A summary of potential sustainability opportunities and guidelines relevant for the project are listed in the four following categories: Site Amenities, Water Conservation & Water Management, Building Systems, and Land Use. The project goal is to acheive USGBC LEED Silver certification and HPBS compliance on the Biological Sciences Building and project site development, as well as compliance with credit intent to the extent possible for the BNR Remodel (but no certification).

SITE AMENITIES

Creating a holistic sustainable campus is the goal of the site amenities section of the guidelines. This includes use of recycled materials, supporting active and healthy lifestyles, and taking advantage of natural systems which already occur on site. The following potential strategies are just some ways that site sustainability can be improved on each campus site.

- Support bike use through respect for existing pathways, as well as dedicated and secure parking near building entrances.
- Provide outdoor trash and recycling containers/receptacles.
- Plan for landscape elements adjacent to buildings and parking areas to provide shading/limit solar exposure.
- Design walks, drives, and roofs with high albedo finish to limit heat island effects.
- Consider life-cycle costs when selecting site amenities.
- Emphasize acquisition of site infrastructure products which are locally produced using recycled materials.
- Utilize materials that are durable, long lasting and fit the overall style of the campus.
- Specify fully shielded outdoor lighting to support dark sky initiatives.

Purposeful site amenity selection support sustainable practices and campus identity includes bike racks, trash and recycling containers.

Well designed outdoor seating areas take into consideration season exposure, landscape diversity, and creation of active and passive activity areas.

Purposeful site amenity selection includes trash and recycling containers.

WATER CONSERVATION & MANAGEMENT

Set in the semi-arid portion of the Intermountain West, much of the water utilized for building services and site irrigation comes from snowmelt. As such, it is a precious resource to be carefully managed. The following strategies have been set for this project as ways that water use can be managed and conserved.

- Meet the EPA WaterSense5 requirements for high efficiency plumbing fixtures and appliances within the building.
- 30% water use reduction thru low flow fixtures,equipment and technology use.
- Reduce potable water use for irrigation by 50% over mid-summer baseline case. Utilize irrigation management systems which adjusts irrigation for the weather.
- Rainwater reuse, through the use of bioswales, visible stormwater runnels and site design to accommodate seasonal snow storage.
- Stormwater quantity and quality control in coordination with local and state regulations.
- Use of permeable paving to allow stormwater and snow melt percolation.
- Green roofs to capture rainwater, extend roof life, increase thermal performance where feasible.
- Reduce water use thru the use of native and adaptive planting and reducing the use of turf to only high intensity recreation areas.

Pedestrian friendly design includes walking paths, bioswales, and dense adaptive planting. Site furnishings encourages use of outdoor spaces.

LAND USE

The BNR Building site and proposed site for the Biological Sciences Building are both central campus sites near the campus core with neighboring retail, commercial and academic uses within walking distance. Efficient use of land during the programming phase required conversations regarding future building expansion and campus master planning drivers. The following guidelines seek to maximize the land use efficiency for existing and future facilities, and landscape and site development space needs.

- Protect open space for community creation and support activities to draw the university community out of buildings, onto the site and through the campus.
- Enhance hardscapes to create identifiable site elements, signage, and support walkable environments.
- Increase the density of buildings supporting the creation of identifiable campus environments supported by buildings, site amenities and landscape elements.
- Preserve viewsheds to and through each campus to enhance engagement and support regional identification.
- Identify transportation management goals to help reduce single rider vehicle impacts. Incentivize transit and bike use, carpool and low-emitting vehicle use.

Enhance the walkable quality of the campus, including increasing access to walking paths, localized landscaped environments, site lighting, site amenities, and access to and through the site.

BUILDINGS AND SYSTEMS

According to the US Environmental Protection Agency, buildings account for 36% of total energy use, and 65% of electricity consumption in the United States. Utah State University has committed to the ACUPCC to achieve carbon neutrality by 2050. The following strategies are some of the ways that existing and future facilities can assist in achieving this important goal.

- Use photovoltaic and wind turbines to produce alternative energy, in ways that are not obtrusive to the overall campus character of each site.
- Configure building massing for passive ventilation and solar gain as feasible.
- Consider building footprint and materials for daylighting and thermal lag opportunities in new construction.
- Consider renewable energy opportunities for existing and new construction.
- Use occupancy sensors and automatic lighting controls where appropriate.
- Design and construct new facilities to meet LEED Silver of higher certification standards and DFCM High Performance Standards.
- Implement 2012 Campus Energy Conservation Plan measures addressing the climate accord to reduce energy use intensity (EUI), lower plug and phantom loads.
- Retro-commissioning of existing buildings to determine the needs and opportunities of existing facilities.

Building integrated photovoltaics on the College of Agricultural and Applied Science Building at USU.

USU Biological Sciences Building Program
Sustainable Goals Checklist
5/12/16

Sustainable Sites

		Possible Points	confidence 0-40% = 0 41-65% = ? 66-100%= 1	Responsible Party	Project Notes
c	**prereq. 1 Construction Activity Pollution Prevention (0 points possible)** Have a plan appropriate to the site based on the 2003 EPA Construction General Permit.	req'd	90%	Civil/Contractor	Civil to create plan for contractor to follow in accordance with EPA Construction General Permit.
d	**credit 1 Site Selection (1 point possible)** Do not build on prime farmland, floodplain, threatened species' habitat, near wetlands or on public parklands	1	100%	CRSA	
d	credit 2 **Development Density & Community Connectivity (1 point possible)** Channel development to urban areas with existing infrastructures, protecting greenfields and preserving habitat and natural resources. **option a:** An existing development density of 60,000 SF/acre (2 story downtown development). **option b:** on a site within 1/2 mile of a residential zone w/ 10 units per acre and w/in 1/2 mile of 10 basic services	0	0%	CRSA	On established Campus land
d	credit 3 **Brownfield Redevelopment (1 point possible)** Rehabilitate damaged sites where development is complicated by real or perceived environmental contamination, reducing pressure on undeveloped land. *Can get possible EPA listing for asbestos.*	0	0%	CRSA	No contamination anticipated.
	credit 4 Alternative Transportation (1-4 points possible)				
d	**4.1.** Public transportation access (existing; OR planned & funded), light rail within a 1/2 mile; 2 bus lines within 1/4 mile	1	90%	CRSA	Multiple bus lines within 1/4 mile
d	**4.2.** Bicycle Storage & Changing Rooms This requires secure bike spaces and/or storage for 5% of peak building users. AND shower and changing facilities for 0.5% of FTE	1	80%	CRSA	Existing BNR building has 1 male/1 female shower in basement (verify if this meets requirements). New bike racks will be provided in the number required.
d	**4.3.** Low-emitting & fuel efficient vehicles	1	80%	CRSA	Provide 8 stalls as preferred parking spaces reserved for fuel-efficient vehicles. No additional new parking beyond 8 stalls
	option a: Provide low-emitting and fuel efficient vehicles for 3% of FTE and provide preferred parking for these vehicles **option b:** Provide preferred parking for low-emitting and fuel-efficient vehicles for 5% of the total parking capacity **option c:** Install alternative-fuel refueling stations for 3% of total vehicle parking capacity				Verify the use of electric charging stations with the University
d	**4.4.** Parking Capacity option a (non-residential): don't exceed min. zoning reqmts; AND preferred parking for 5% of total parking spaces option b (non-residential): if parking provided for <5% FTE occupants, preferred parking for 5% of total parking spaces option c (residential): don't exceed min. zoning reqmts; AND provide infrastructure/programs for ridesharing option d (all): no new parking	1	80%	CRSA	Provide 8 stalls as preferred parking spaces reserved for carpooling vehicles. No new additional parking beyond 8 stalls. Since there is no zoning requirement, meet requirements of Portland Parking Title 33. For our ???,??? parking building, requires a minimum of ???, and a maximum of ??? stalls.
	credit 5 Site Development (1-2 points possible) **5.1** Protect or Restore Habitat				
c	**option a (greenfields):** limit site disturbance to 40' beyond the building perimeter, 10' beyond hardscape & minor utilities, 15' beyond primary roadway curbs & main utility branch trenches, & 25' beyond constructed areas with permeable surfaces.	0	0%	Landscaping	Site is not a greenfield.
c	**option b (prev.developed sites):** Restore 50% of open space by planting native or adapted vegetation. *(including green roofs, if applicable)*	1	80%	Landscaping	Review with landscaping team
d	**5.2** Maximize Open Space **option a:** reduce development footprint to exceed local zoning open space req'mt for site by 25%. **option b:** if there is no zoning reqmt, provide vegetated open space area equal to the building footprint. **option c:** where zoning has no open space requirement, provide vegetated open space equal to 20% of the project's site area.	1	90%	Landscaping	Open space to be designated not to be built upon in the future.
	credit 6 Storm Water Design (1-2 points possible)				
d	**6.1** Quantity Control (if existing imperviousness is less than or equal to 50%): **option a:** stormwater management plan that prevents the post-development peak discharge rate & quantity from exceeding the pre-development peak discharge rate & quantity (for one and two-year 24hr design storms) option b: stormwater management plan that protects receiving stream channels from excessive erosion by implementing stream channel protection strategy & quality control measures	1	90%	Civil	Verify existing perviousness. Site plantings and soils will encourage percolation within the project site. Site to follow LEED-NC Application Guide for Multiple Buildings and On-Campus Building Projects in utilizing the campus stormwater system to contain stormwater on campus.
	6.1 Quantity Control (if existing imperviousness is greater than 50%):	0	0%	Civil	
d	**option c:** stormwater management plan that decreases volume of two-year 24hr design storm by 25%. **6.2** Quality Control Implement a stormwater management plan that reduces impervious cover, promotes infiltration & captures & treats runoff from 90% of the average annual rainfall using BMPs. (remove 80% of TSS loads)	1	90%	Civil	Achievable with snouts, gravel sumps etc.in conjunction with keeping all stormwater on campus.
c	**credit 7 Heat Island Effect (1-2 points possible)** **7.1** Non-Roof. **option a:** 50% of non-roof impervious surfaces shall be shaded, open-grid or light-colored paving (SRI ≥29). **option b:** 50% of parking shall be underground, under deck, under roof, or under a building. Any roof to cover parking must have SRI ≥29.	1	90%	Civil	Requires at least 50% of paving to be concrete or other light-colored paving. Sidewalks to be concrete, parking to be asphalt.

USU Biological Sciences Building Program
Sustainable Goals Checklist
5/12/16

d	**7.2** Roof **option a:** 75% of roof surface must meet the following SRI requirements: low-sloped roof (slope ≤2:12), SRI ≥78 steep-sloped roof (slope >2:12), SRI ≥29 **option b:** 50% of roof shall be vegetated **option c:** combine the above two options to meet the following formula for area: (SRI area/0.75) + (vegetated area/0.5) ≥ total roof area	1	90%	CRSA	White membrane roofing meet SRI requirements
d	**credit 8 Light Pollution Reduction (1 point possible)** **Interior Lighting.** **option a:** angle of maximum candela from each interior luminaire shall not exit through the windows. **option b:** all non-emergency interior lighting shall turn off during non-business hours, with manual override. **Exterior Lighting.** Classify project site into RP-33 zones to determine requirements. LZ1. Dark (Park and Rural Settings) LZ2. Low (Residential areas) LZ3. Medium (Commercial/Industrial, High-density Residential) LZ4. High (Major City Centers, Entertainment Districts) Do not exceed 80% of the lighting power densities for exterior areas and 50% for building facades & landscape features as defined in ASHRAE/IESNA Standard 90.1-2004.	1	80%	Electrical	Interior and site lighting are planned to avoid light pollution with shielded/full cutoff light fixtures, no uplighting.

Water Efficiency

		Possible Points	confidence 0-40% = 0 41-65% = ? 66-100%= 1	Responsible Party	Project Notes
	credit 1 Water Efficient Landscaping				
d	**1.1.** Reduce by 50% Reduce potable water consumption for irrigation by 50% from a calculated mid-summer baseline case using plant species, irrigation technology, captured/recycled water, publicly supplied non-potable water.	1	80%	Landscaping	Use of water efficient landscaping and irrigation- drip system in planting beds.
	1.2. No Potable Water Use or No Irrigation 100% total reduction in potable water for irrigation, or no permanent irrigation systems	0	0%		
d	credit 2 **Innovative Wastewater Technologies (1 point possible)** **option a:** Reduce potable water use for sewage conveyance by 50% with water-conserving fixtures or non-potable water. **option b:** Treat 50% of wastewater on-site to tertiary standards to remain on-site.	0	0%	Civil	
d	**credit 3 Water Use Reduction (1-2 points possible)** Reduce water usability by (**3.1**) 20% and (**3.2**) 30% over EPA 1992 requirements (which includes low-flow water closets)	1 1	80% 60%	Mechanical	Use of low flow fixtures; showerhead, faucets, urinals etc. Assumes 1.1/1.6 gpf toilets, 1/8 gpf urinals, .5 gpm faucets, 1.5 gpm showerheads.

	Female	Male
FTE Employees	25	25
FTE Students	45	45
Update Numbers	70	70
Annual Days of Operation	250	

Energy & Atmosphere

		Possible Points	confidence 0-40% = 0 41-65% = ? 66-100%= 1	Responsible Party	Project Notes
c	**prereq 1 Fundamental Building Systems Commissioning** Commissioning Authority (CxA) shall have documented commissioning authority experience in at least two building projects. CxA shall report findings and recommendations directly to the Owner. *If project <50,000sf, CxA may include qualified persons on the design/construction teams who have the required experience.*	req'd	90%	DFCM with CxA direct hire	Required on all DFCM projects. Commissioning specs provided, team to coordinate with cx agent for design reviews, submittal reviews, testing, training etc. Cx Agent to review prior to 50% CD.
d	**prereq 2 Minimum Energy Performance** Comply with both mandatory AND prescriptive requirements of performance ASHRAE/IESNA 90.1-2004 (without amendments). (Sections 5.4, 6.4, 7.4, 8.4, 9.4, 10.4 AND 5.5, 6.5, 7.5, 9.5) *(allows use of performance requirements in section 11 in lieu of prescriptive)*	req'd	90%	DFCM with Energy Modeler direct hire	General good practice anticipated with a well-designed system.
d	**prereq 3 Fundamental Refrigerant Management** Zero use of CFC refrigerants in new buildings & CFC phase-out conversion in existing.	req'd	90%	Mechanical	General good practice anticipated with a well-designed system.
d	**credit 1 Optimize Energy Performance (1-10 points possible)** **option a:** Whole Building Energy Simulation Use the Building Performance Rating Method in Appendix G of 90.1-2004. New Buildings, 10.5% - 42% reduction. (1 point per 3.5% increment up to 10) Existing Buildings 3.5% - 35% reduction. (1 point per 3.5% increment up to 10) **option b:** Prescriptive Compliance Path (4 points) For office occupancy buildings <20,000sf: comply with ASHRAE Advanced Energy Design Guide for Small Office Buildings 2004. **option c:** Prescriptive Compliance Path (1 point) Comply with Basic Criteria & Prescriptive Measures of the Advanced Buildings Benchmark™ Version 1.1 (not incl 1.7, 1.11, 1.14)	4	80%	DFCM with Energy Modeler direct hire	Computer modeling to provide savings performance percentages. Assume: Demand controlled ventilation, Solarban 70XL glazing, use of campus chilled water and steam systems, perimeter heating in offices, heat exchanger on exhaust ventilation system, etc.
d	credit 2 **On-Site Renewable Energy (1-3 points)** Encourage and recognize increasing levels of self-supply through renewable technologies to reduce environmental impacts associated with fossil fuel energy use (2.5-7.5-12.5% contribution)	0	10%	Electrical	Not recommended for this project. Too costly for the benefit.

USU Biological Sciences Building Program
Sustainable Goals Checklist
5/12/16

c	**credit 3 Enhanced Commissioning (1 point possible)** CxA for this credit may not be an employee or contracted through contractor.	1	80%	DFCM with CxA direct hire	Commissioning specs provided, team to coordinate with cx agent for design reviews, submittal reviews, testing, training etc.
d	**credit 4 Enhanced Refrigerant Management (1 point possible)** **option a:** do not use refrigerants **option b:** calculate a building weighted average for Ozone Depletion Potential and Global Warming Potential where LCGWP + LCODP x 10^5 ≤ 100 AND use fire suppression systems that do not contain CFCs, HCFCs or Halons	1	80%	Mechanical	Anticipated with refrigerant selection. Verify required fire supression system for vertibrate collection (isopropyl alchol in varying size jars)
c	credit 5 **Measurement and Verification (1 point possible)** Provide for the ongoing accountability of building energy consumption over time. Implement a M&V plan to cover at least one year post-construction. IPMVP	0	10%	Mechanical	Likely too extensive and not appropriate for this project. Review USU needs.
c	**credit 6 Green Power (1 point possible)** Encourage the development and use of grid-source energy technologies on a net zero pollution basis, 35% of the building's "regulated" electricity for **two years**. Use EA 1.0 model OR DOE Commercial Building Energy Consumption Survey (CBECS) database to determine estimated use. Meet the Center for Resource Solutions certification requirements.	1	80%	Contractor/Owner	Available from a variety of providers. ID credit possible for 70% green power.

Materials & Resources

		Possible Points	confidence 0-40% = 0 41-65% = ? 66-100%= 1	Responsible Party	Project Notes
d	**prereq 1 Storage & Collection of Recyclables** Facilitate the reduction of non-hazardous waste generated by building occupants that is hauled to and disposed of in landfills by providing recycling areas.	req'd	90%	CRSA	Provide recycling for glass, cardboard, paper, metal and plastic. If recycling for all of these materials is not available, campus to create a policy to adopt services as they become available.
c	credit 1 **Building Reuse (1-3 points possible)** *If the project includes an addition to an existing building, the square footage of the addition may not be more than 2 times the square footage of the existing building to achieve this point.* **1.1.** Retain 75% of existing shell: walls, floors & roof (by surface area) **1.2.** Retain 95% of existing shell: walls, floors & roof (by surface area) **1.3.** Retain 50% of interior nonstructural elements (% of total building area including additions)	0 0 0	0% 0% 0%	Contractor	Not applicable.
c	**credit 2 Construction Waste Management (1-2 points possible)** Salvage/Recycle 50% min (**2.1**) -75% min (**2.2**) of nonhazardous construction waste. *Soil & land clearing do not contribute to this credit.*	1 1	80% 60%	Contractor	Waste Management available in Logan HPBS mandate
c	credit 3 **Materials Reuse (1-2 points possible)** Specify 5-10% cost of division 02-10 building materials. Specify salvaged or refurbished materials for 5% (**3.1**) or 10% (**3.2**) of building materials.	0	10%	Contractor	Not anticipating a large use of salgaved materials.
c	**credit 4 Recycled Content (1-2 points possible)** Specify 10-20% cost of division 02-10 building materials. Specify a minimum of 10% (post-consumer + 1/2 pre-consumer) (**4.1**) or 20% (post-consumer + 1/2 pre-consumer) (**4.2**).	1 1	80% 60%	Contractor	To include drywall, carpeting, insulation, concrete, steel etc. To include in specs and select products with high recycled content.
c	**credit 5 Regional Materials (1-2 points possible)** 10% (**5.1**) or 20% (**5.2**) cost of division 02-10 building materials shall be extracted, processed & manufactured within a 500mi radius.	1 0	80% 30%	Contractor	This is more difficult to achieve: to include brick, stone, concrete, plantings, possibly to include some steel. Possibility of second point- to be confirmed during construction.
c	credit 6 **Rapidly Renewable Materials (1 point possible)** 2.5% cost of division 02-10 building materials, i.e., bamboo flooring, wool carpet, etc.	0	30%	Contractor	
c	credit 7 **Certified Wood (1 point possible)** Encourage environmentally responsible forest management by using **certified wood for 50% of permanently installed wood**.	0	30%	Contractor	

Indoor Environmental Quality

		Possible Points	confidence 0-40% = 0 41-65% = ? 66-100%= 1	Responsible Party	Project Notes
d	**prereq 1 Minimum IAQ Performance** Establish minimum indoor air quality (IAQ) performance as per sections 4 through 7 of ASHRAE 62.1-2004 Ventilation Rate Procedure.	req'd	90%	Mechanical	General good practice.
d	**prereq 2 Environmental Tobacco Smoke (ETS) Control** **option a:** Prohibit indoor smoking and locate outside smoking areas far from windows, intakes or doors. **option b:** use designated smoking areas with stringent requirements **option c (residential buildings):** prohibit smoking in common areas, properly locate outside smoking areas and seal penetrations and chases between residential units.	req'd	90%	CRSA	Utah Clean Air Act and school policy prohibits smoking indoors.
d	**credit 1 Outdoor Air Delivery Monitoring (1 point possible)** Provide capacity for ventilation system monitoring to sustain occupant comfort. Monitor densely occupied spaces and outdoor airflow rates. *Naturally ventilated spaces have different requirements.*	1	80%	Mechanical	CO2 monitors in breathing zone of group spaces with demand controlled ventilation.
d	**credit 2 Increased Ventilation (1 point possible)** Breathing zone outdoor air ventilation rates to all occupied areas shall exceed ASHRAE 62.1-2004 minimum rates by 30%	1	80%	Mechanical	Mech to review.

CRSA PAYETTE

USU Biological Sciences Building Program
Sustainable Goals Checklist
5/12/16

	credit 3 **Construction IAQ Management Plan (1-2 points possible)**	1	80%	**Contractor**	IAQ management plan carried out and documented by contractor
C	**3.1.** During Construction. Develop and implement an Indoor Air Quality (IAQ) Management Plan. **MERV 8** on systems in use during construction, no forced air filters at grilles.				
C	**3.2.** Before Occupancy **option a (flush out):** total air volume of 14,000 cuft/sf of floor area while maintaining an internal temperature of at least 60degF and relative humidity ≤ 60%. **option b (flush out):** if occupancy is desired prior to flush out completion, can be allowed after 3500cuft/sf. Flush shall continue at 0.3 cfm/sf until 14,000cuft/sf has been achieved. **option c (air testing):** Conduct IAQ testing showing less than maximum	1	80%	**Contractor**	Schedule item, may delay moving in or restrict items to be moved in. Or air testing likely will allow sooner move in date and will work for inclement weather.
	credit 4 **Low-Emitting Materials (1-4 points possible)**				
C	**4.1.** Adhesives & sealers must not exceed VOC limits *(including aerosol adhesives)*	1	80%	**Contractor**	Spec item, to be reviewed by architect.
C	**4.2.** Paints, coatings, primers, varnishes, sealers, stains, etc. must not exceed the VOC limits	1	80%	**Contractor**	Spec item, to be reviewed by architect.
C	**4.3.** Carpet system must meet or exceed requirements: carpet: CRI Green Label Plus carpet pad: CRI Green Label adhesive: VOC limit 50 g/L (same as EQ 4.1)	1	80%	**Contractor**	Spec item, to be reviewed by architect.
C	**4.4.** Composite wood and agrifiber products must contain **no** added **urea-formaldehyde** resins. *On-site and shop assemblies must comply.*	1	80%	**Contractor**	Spec item, to be reviewed by architect.
d	**credit 5** **Indoor Chemical & Pollutant Source Control (1 point possible)** Issue 1: Permanent entryway systems at all entries connected to the outdoors. Issue 2: janitorial closets, copy rooms & chemical mixing rooms all vented directly to exhaust ducts, have deck to deck partitions, self-closing doors, with pressure differentials as described. Issue 3: Use MERV 13 filters for both return & outside air prior to occupancy.	1	80%	**CRSA**	Requires MERV 13 filters Mech design to ensure filters, ventilation requirements and exhaust is met. Arch to ensure mats, hardware schedule and deck to deck partitions are met.
	credit 6 **Controllability of Systems (1-2 points possible)**	1	75%	**Electrical**	
d	**6.1 Lighting:** provide controls for 90% of occupants and controllability for all shared spaces that meets group needs/preferences.	0	30%	**Mechanical**	Shared office spaces have individual task lights.
d	**6.2 Thermal Comfort:** provide controls for 50% of occupants and controllability for all shared spaces that meets group needs/preferences.				Verify thermal controls.
	credit 7 **Thermal Comfort (1-2 points possible)**	1	80%	**Mechanical**	General good practice.
d	**7.1 Design.** Provide for a thermally comfortable environment using ASHRAE 55-2004 Thermal Comfort Conditions for Human Occupancy				
d	**7.2 Verification.** Survey occupants 6-18 months after occupancy. Develop a plan for corrective action if > 20% occupants are dissatisfied.	1	80%		Survey occupants after occupancy.
	credit 8 **Daylight & Views (1-2 points possible)**	1		**CRSA**	LEED requires 75% of occupied spaces have usable daylight.
	Provide a connection between indoor spaces and outdoor environments through the introduction of sunlight and views into the occupied areas of the building.	1	20%	**CRSA**	
d	**8.1 Daylight.** Achieve sufficient daylighting in 75% of all occupied spaces using one of the following methods: **option a** (calculation): 2% glazing factor; **option b** (simulation): 25 footcandles under clear sky conditions, at noon, equinox 30" above the floor; **option c** (measurement): 25 footcandles taken on a 10ft grid.				
d	**8.2 Views.** Give access to views from 90% of all occupied spaces (not including systems furniture).				

Innovation & Design Process

		Possible Points	confidence 0-40% = 0 41-65% = ? 66-100%= 1	Responsible Party	Project Notes
	credit 1 **Innovation in Design (1-4 points possible)** Exceptional performance above requirements set by the LEED Green Building Rating System and/or innovative performance in Green Building categories not specifically addressed by LEED.				These credits are MORE difficult to achieve than the others, and require more documentation.
d	1.1. Education (case study, tours AND brochures)	1	75%	**CRSA**	Provide education of sustainable building measures.
d	1.2. Exceptional Performance EA6.0	1	50%	**Contractor**	Contractor can purchase green power with Renewable Choice Energy...keep as back up ID credit
d	1.3. Exceptional Performance- Open Space ID	0	25%	CRSA	
d	1.4. Exceptional Performance- MR 4.0 - Exemplary Performance	0	25%	CRSA	Exceptional recycled content value
d	1.5. Exceptional Performance- Teleconference Meetings	0	70%	CRSA	
C	**credit 2** **LEED Accredited Professional (1 point possible)** To support and encourage the design integration required by a LEED Green Building project and to streamline the application and certification process.	1	90%	**CRSA**	

total possible points 44 + 3 other possibles

26-32 Certified 33-38 Silver 39-51 Gold 52-69 Platinum

C = ***ConstructionSubmittal***

d = ***Design Submittal***

4.5.3 Site/Landscape

Foot Traffic
The east-west footpath which connects to the proposed Biological Sciences building site could potentially inform the location of the building's entrance. Similarly, the node created near the intersection of the dominate east-west and north-south paths could likewise guide further discussion as the potential location of the building's primary entrance.

Bicycle Parking
With the addition of the Biological Sciences building, it is recommended that an additional covered bicycle facility is provided near the entrance of the building.

Key Destinations
The inclusion of a a building lobby and student gathering area on the first floor of the proposed Biological Sciences building, in addition to potential outdoor seating linked to this use is recommended. Outdoor seating could provide a dynamism to the building and create a convenient and centralized gathering place for those in the BNR, Campus Welcome Center, Lab Animal Research Center, and several other surrounding buildings.

Site Amenities
It is recommended that additional seating is provided with the development of the Biological Sciences building. An opportunity to create covered seating, something that could be utilized throughout the year as opposed to when weather is ideal, should also be considered as many students are on campus when conditions are not always optimal.

Landscaping
Construction will most likely affect the existing mature trees located at the NW corner of the BNR Building and the two large trees directly south of the main pedestrian walkway of the BNR. Ongoing discussions with the University Landscape Architect and Steering Committee determined that the treatment of these trees needs to be carefully outlined in the Schematic Design phase of this project. The Austrian Pine and Bald Cyprus are on the USU Campus Tree Identifcation Tour Map and represent species important to the campus fabric. There are other examples of the Austrian Pine on campus, but the Bald Cyprus is a unique specimin which does not normally grow in this zone. The pros and cons of moving and possibly re-using one or both of these trees in a new landscaped area of the new Life Science Building need to include studies on the viability of survival after re-location, the cost of relocating and the value of these trees as important specimins within the campus context.

The new landscape should incorporate water conserving and sustainable practices while blending with the feel and character of the adjacent campus landscapes. Recommendations include incorporating water conserving planting methods such as the use of native and adaptive plantings, using a minimum 4"depth of mulch in all plant beds, using landscape boulders and other un-irrigated landscape features, and limiting turf areas where possible. The landscape will be coordinated with the other site disciplines in regard to underground utilities, lighting, grading and drainage to provide a cohesive plan. Coordination of tree placement will be coordinated with the site lighting to ensure that the lighting does not become obscured by tree canopies. Planting areas at the edges of construction will need to be repaired or replaced to create a smooth transition to existing landscape areas.

Landscape design and strategies will be coordinated with the campus Landscape Architect. These strategies should facilitate ground water return, storm water runoff mitigation, and other conservation-minded landscape design methods. Plantings should be used to screen prevailing winter winds and shade buildings in the summer. They should also be used to screen unattractive views, create a human scale in exterior spaces adjacent to buildings, and shade hardscape areas. Outdoor seating and site furnishings should be incorporated to provide useable exterior spaces. Appropriate pedestrian connections and walkways should be considered to create sensible connections to other areas of campus.

Project Goals
- Provide a landscape that will incorporate sustainable practices while still blending with the feel and character of the campus.
- Wisely control water usage through the use of native and adaptive plantings, grouping plants according to water need, use of mulches to reduce the loss of soil moisture through evaporation and use of quality planting soil.
- Protect / restore habitat through the use of native and adaptive plant varieties.
- Maintaining open space by protecting or providing pedestrian oriented hardscape areas and vegetated open spaces.
- Provide comfortable exterior spaces by mitigating extreme temperatures, glare, wind, and noise through the proper use of planting.
- Reduce the heat island affect by using trees to shade hardscape areas.

<u>Irrigation</u>
The existing landscape of the project site does have an existing irrigation system. Verification of existing irrigation features such as locations of mainline, valves control wires, lateral lines, heads, etc. will be verified in future phases of design. No irrigation controllers can be seen on the project site. All irrigation elements within the project boundary will be the proper relocation of existing heads, valves, drains, piping, etc. or the replacement of the same as required by the site conditions and the new project.

All new irrigation will provide with the following performance minimum standards and guidelines:
- Provide head-to-head coverage of all areas irrigated.
- Provide matched precipitation rates in all areas of coverage. Full and part-circle rotor heads to be on different valves.
- Prevention of over spray onto building, parking areas and walkways adjacent to irrigated areas.
- Complete drainage of system using only manual drain valves for mainlines and compressed air for laterals.
- Locate valve boxes at edges of irrigated areas, adjacent to pavement where not subject to damage by vehicles. Group valves boxes side by side when more than one box is required in a given location. Provide a ball valve to isolate each valve manifold.
- Design irrigation system to comply with all campus approved irrigation standards and equipment.

Project Goals
- Wisely control water usage through the proper design of irrigation systems, and the use of proven water conserving irrigation technologies.
- Campus Irrigation Design Standards, Division 32 (found at: http://www.usu.edu/facilities/planning/designreq.cfm) will be followed while using only approved irrigation products.

It is critical that irrigation systems servicing areas outside the construction limits remain in service at all times during the irrigation season in order to maintain the surrounding landscapes in a healthy condition. Temporary connections, relocation, or replacement of irrigation system components that will be impacted by this project to be funded from the project construction budget.

Sustainability
In compliance with the current edition of the LEED-NC for New Construction Reference Guide, the site design will make a concerted effort to implement the outlined credits taken from the Sustainable Site and Water Efficiency portions of the document.

<u>Sustainable Site</u>
Two credits within this section will be explored during design. Credit 5.1 Site Development-Protect or Restore Habitat and Credit 5.2 Site Development-Maximize Open Space will be explored. Dependent on the final building footprint, it is anticipated that 5.1 and 5.2 will be achieved.

<u>Water Efficiency</u>
One credit within this section will be explored during design. Credit 1.1 Water Efficient Landscaping- Reduce by 50%. It is anticipated that this credit will be achieved as this project moves forward.

4.5.4 Civil/Utilities

BNR Building

Sewer

It is not anticipated that the additional square footage added to the BNR building will require upgrading/upsizing and of the water services currently in place to or from the building.

Water

It is not anticipated that the additional square footage added to the BNR building will require upgrading/upsizing and of the water services currently in place to or from the building.

Storm Drain

It is likely that an additional sump will be required due to increased impervious area associated with the proposed construction. The additional sump will likely be located near the northwest corner of the existing BNR building. Storm water volumes are not known at this point but it is likely that this proposed sump and the existing sumps will be sufficient to store the required volume. As an alternate or combined strategy, rain gardens can be used to temporarily store excess storm water.

Natural Gas

It is not anticipated that the additional square footage added to the BNR building will require upgrading/upsizing of the gas service currently in place to the building.

Grading and Site

It is anticipated that typical site features shall be installed with this building project. Features such as new asphalt, sidewalk, curb and gutter, plaza space, and a courtyard are considerations at this point.

The current site is well established and demolition to prepare the site for development is expected to be minimal.

Care should be taken to ensure that all sidewalks/landings meet the current ADA standards. All stair landings and door landings shall have a slope of less than 2% in all directions. All sidewalks and parking areas shall have a maximum slope of 5%. It is not anticipated that there will be any areas where there is a large amount of grade change so railings are not expected to be required.

New Biological Sciences Building

Sewer

The sewer service for the Biological Sciences building will be on the west side of the proposed building footprint. The exact location is unknown, but the service will likely be connected into the existing manhole located approximately in the midpoint of the proposed building. The sewer manhole at the termination of the siphon on the north side of the Biological Sciences building will likely have to be shifted north approximately 5-8 feet. The sewer manhole just west of the termination will be removed. A new sewer manhole will be installed near the northwest corner of the building. The sewer main running southwesterly will be abandoned and a new sewer line will be installed connecting to the sewer manhole located at approximately the midpoint of the building (see Bio sewer map). It should be noted that the proposed construction will most likely impact the two existing at the northwest corner of the site (see landscape narrative).

Water

The USU utility map shows an existing culinary water stub at approximately the midpoint of the building, near the sidewalk running north and south. It is anticipated that culinary water services to the building will be connected to the USU water system at this point.

It is likely that a dedicated 6” fire line will be required for a building of this size. A 4” culinary water services will likely be required for culinary demands related to the users of the building. Both the culinary and fire line will be sized by the mechanical engineer. It is proposed that both of these services be installed from the point of connection listed above to the west side of the proposed Biological Sciences building.

Storm Drain

The proposed location of the Biological Sciences building will require that the sump located near the southeast corner, and the sump located near the northeast corner of the proposed Biological Sciences building, be relocated to the east.

It is likely that additional sumps will be required due to the increased impervious area associated with the proposed construction. The additional sumps will be located near the southwest, northwest, and midpoint of the proposed Biological Sciences building. Stormwater volumes are not known at this point but it is likely that these three sumps will be more than sufficient to store the required volume.

Natural Gas

The USU utility map shows a gas main line running in the east/west direction on the north side of the proposed Biological Sciences building. It is anticipated that main line will be used to service the proposed Biological Sciences building

Grading and Site

It is anticipated that typical site features shall be installed with this building project. Features such as new asphalt, sidewalk, curb and gutter, plaza space, and a courtyard are considerations at this point. The proposed location of the new building is schematic in nature and may change throughout the design process.

The current site is well established as turf grass and demolition to prepare the site for development is expected to be minimal.

Care should be taken to ensure that all sidewalks/landings meet the current ADA standards. All stair landings and door landings shall have a slope of less than 2% in all directions. All sidewalks and parking areas shall have a maximum slope of 5%. It is not anticipated that there will be any areas where there is a large amount of grade change so railings are not expected to be required.

Miscellaneous Items Requiring Verification

The project site is still very programmatic in nature. The following table summarizes items that should be verified before moving on to the next phase of design:

Item	Topic	Responsible Party
Irrigation Utilities	Existence and current use	Topographical Survey, USU, CSG
Water Utilities	Verify existence, size, and pressure of water main.	Topographical Survey, USU, CSG
Sewer Utilities	Verify existence, size, slope, and capacity.	Topographical Survey, USU, CSG
Storm Water	Verify existence, size, depth, capacity and percolation rate of the soil.	Topographical Survey, USU, CSG, Geotechnical Report

Sustainability

The referenced standard utilized in the development of sustainable design includes current editions of LEED-NC for New Construction Reference Guide V4. The civil design support the acheivement of credits in the Sustainable Sites and Water Efficiency Sections as defined in Section 4.5 of this document.

Sustainable Sites:
Three credits within this section will be explored during design. Prerequisite point 1 - Construction Activity Pollution Prevention will be included in the plan as a requirement. Credits 6.1, Storm Water Design - Quantity Control and 6.2 Storm Water Design - Quality Control will be explored. It is anticipated that both credits 6.1 and 6.2 will be achieved in addition to the Prerequisite point 1.

Credits 7.1 and 7.2 should be explored by the design team in further detail as the project moves forward.

LEED Gold is the goal for this project acknowledging that LEED Silver is the University minimum standard.

4.5.5 Structural

The structural design for this project should provide a building system which will integrate with the program requirements for space layout, as well as with the architectural and building service needs, while meeting current code standards for vertical and horizontal load carrying capacity. User needs in terms of current flexibility of the spaces and future adaptability of use should be considered.

Anticipated Building Structural Systems

Biological Sciences Building

The new Biological Sciences Building is anticipated to be a 105,000 square-foot facility 3-stories above grade with an 12,200 square-foot mechanical penthouse on the roof and with a basement under approximately 60% of the building. The footprint of the building is approximately 25,000 square feet. Special design considerations include a large amphitheater style lecture hall on Level 1 built on grade but with sloping or stepped slab risers. The building construction type is proposed to be steel frame. This is the predominant multi-story building system in our area and is in our opinion the most cost effective and flexible choice for the project. Steel roof deck will be supported by open web steel joists and steel wide flange girders. Floor decks will be lightweight concrete on composite metal deck supported by composite steel wide flange beams and girders. Roof and floor framing will be supported by tube steel and steel wide flange columns. Columns will be supported by shallow reinforced concrete spread footings. The basement walls will be reinforced concrete designed to retain soil.

Special Concentric Braced Frame and Special Reinforced Masonry Shear Wall lateral force resisting systems will be considered for incorporation into the project. Buckling Restrained Braced Frames will also be studied as a variation of Special Concentric Braced Frames. Lateral system selection will strive to combine a cost effective solution that best meets the requirements of architectural plans and aesthetic.

The floor plan spaces should be arranged from level to level allowing for full height columns without transfer conditions. This helps keep total steel tonnage down.

Existing North Wing

The north wing of the existing Biology and Natural Recourses Building is to be remodeled and undergo a seismic retrofit. A new mechanical penthouse will be built on the existing building roof. A new stair and elevator shaft and restroom addition will be built on the west end. It will match the height of the North Wing with levels from basement to roof and be physically connected to the North Wing and maintain an expansion joint between the West Wing. New construction of this addition is steel framing the same as described for the new building. The existing gravity framing is adequate to support anticipated loads, including new high-density storage shelving in Insect Collection and Bee Collection rooms on Level 2, except at the roof where the new mechanical penthouse will be built. Reinforcing of existing roof framing and column strengthening is anticipated to support the new mechanical loads under the new mechanical penthouse.

The lateral force resisting system of the existing building is inadequate to support seismic forces as determined by the current building code. New brace frame bays on the north and south sides of the building need to be constructed. Existing shear walls on the east and west ends of the building need to be augmented as well. This can be achieved by using new reinforced concrete shotcrete walls or Fiber Reinforced Polymer (FRP) sheets. Existing concrete foundations will need to be augmented with piers or additional reinforced concrete walls from Level 1 down to the basement and new deep foundation elements may be required at ends of brace bays or shear walls. The seismic retrofit could be considered a voluntary upgrade depending on final analysis of the effect of the added mechanical penthouse weight, however, this would need to be verified by the state building official as he could interpret the building code differently and make the judgement that a retrofit is mandatory triggered by the extent of work involved in the remodel. Because the three wings of the BNR building are separated by an expansion joint, seismic retrofit of the North Wing should not trigger a mandatory retrofit of the West and South Wings. This also would need the building official's approval.

West Wing Addition

A 1-level lobby addition is planned for the west side of the west wing of the BNR Building. No basement is planned under the new addition area but footings will need to be stepped down to existing basement footing elevation so that additional lateral pressure is not loaded onto existing basement walls. The new lobby addition will be constructed with a steel framing system. Metal roof deck will be supported by open web steel joists and steel wide flange girders. Roof framing will be supported by steel columns that are in turn supported by reinforced concrete spread footings. The new lobby addition will have its own independent lateral force resisting system utilizing either a steel moment frame or special concentric steel brace frames so that it does not trigger a mandatory seismic upgrade of the West Wing.

A new light well sized to contain new generators is planned for the north end and will be excavated down to allow electrical utility lines to run into the existing basement area. It will be constructed using reinforced concrete walls that will retain several feet of earth on three sides.

SEISMIC UPGRADE DIAGRAM

BNR FIRST FLOOR W/ GRIDS

Not to scale

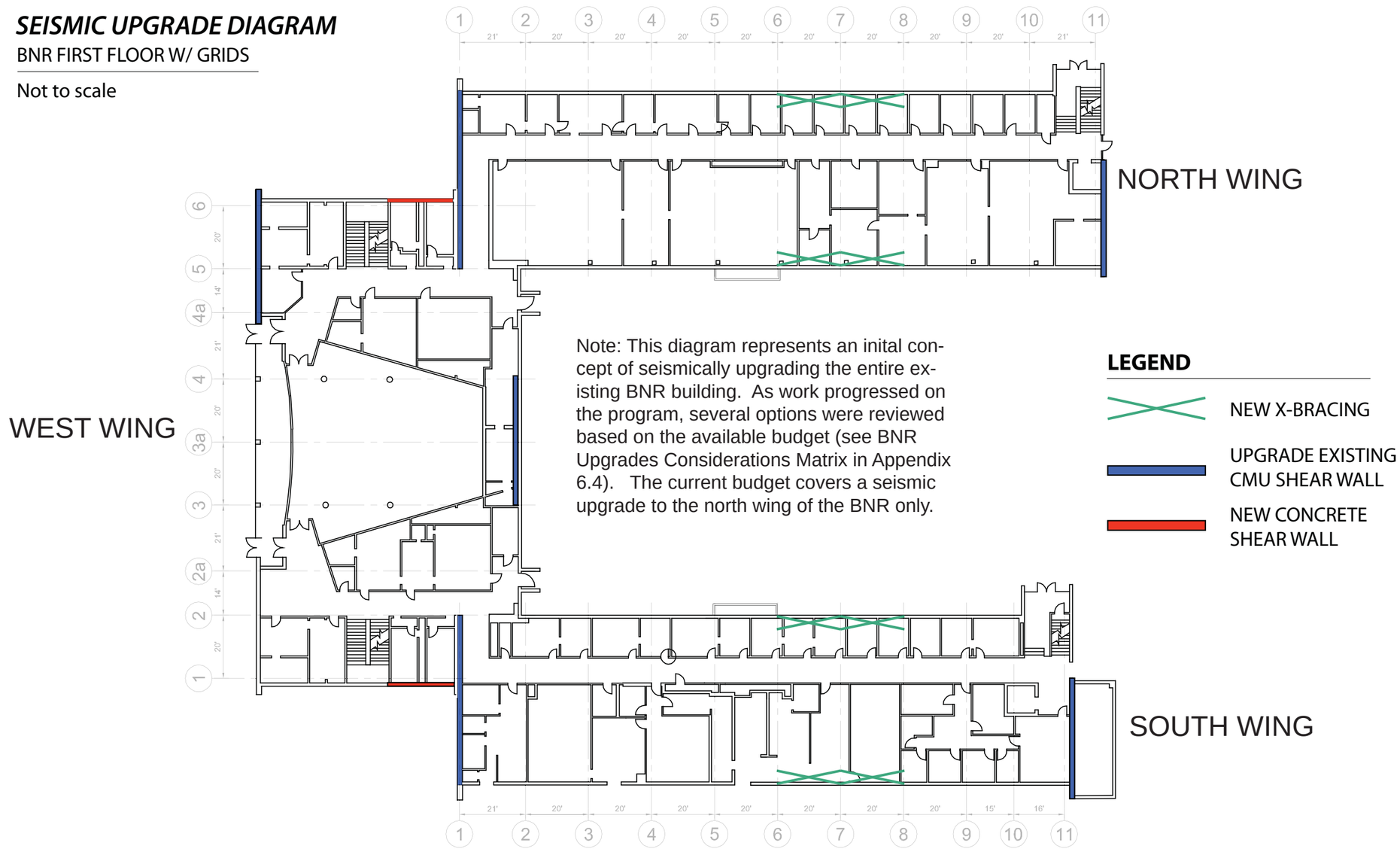

Note: This diagram represents an inital concept of seismically upgrading the entire existing BNR building. As work progressed on the program, several options were reviewed based on the available budget (see BNR Upgrades Considerations Matrix in Appendix 6.4). The current budget covers a seismic upgrade to the north wing of the BNR only.

LEGEND

- NEW X-BRACING
- UPGRADE EXISTING CMU SHEAR WALL
- NEW CONCRETE SHEAR WALL

4.5.6 Mechanical

The USU Biology project includes two phases consisting of the construction of a new building as well as the renovation and addition of the existing Biology and Natural Resources Building (BNR). The new building will have an emphasis on teaching laboratory space and will be approximately 103,000 sf. The new building is anticipated to be a three story building with a mechanical penthouse on the roof and campus utility connections and associated mechanical equipment being located in a basement mechanical room.

The renovation of the existing BNR building will take place in the north and west wings. The north wing is approximately 46,000 gsf and the scope of work will be to demolish and replace the majority of the existing mechanical and plumbing systems. A new mechanical penthouse will be added to the roof and the existing basement mechanical room will be expanded in order to accommodate new equipment. A 3-story addition will connect to the west wing and will expand the building connection of the west and north building wings. The addition will provide new toilet rooms and a new code compliant stairwell.

New Biology Building

Campus Central Utility Plant Connection

The campus central utility plant will provide building heating and cooling to the new biology building. There are currently two tunnel nodes in the vicinity near the project site that could potentially be utilized for the new project. Tunnel node #6 is located furthest north and serves the University Inn. Tunnel node #7 is located 100 ft south and was constructed to serve the Agricultural Science Building that previously occupied the project site before it was demolished. The tunnel was constructed as part of the main campus tunnel project in 2001 and meets the USU campus tunnel standards. With the construction of the new Biology building the existing piping will be demolished/removed and new properly-sized chilled water, steam and condensate lines will be installed.

Building Cooling

Variable flow pumps will be provided in the basement mechanical room each sized for 100% of the building load. Chilled water will be pumped from the basement mechanical room to provide building cooling supplied by coils located in the building air handling units and fan coil units serving electrical/ data rooms. Coils will be sized for a high delta-T (16°F) in order to reduce pumping energy in the building.

Building Heating

High pressure (80 psi) steam will be supplied from the campus central plant. A pressure reducing station comprised of valves sized for 1/3 and 2/3 of the building load will be provided in addition to a manual bypass valve. A steam meter (Onicon F-2500 vortex type or equal) shall be provided as required by USU campus standards and DFCM High Performance Building Standard (HPBS). Two shell-and-tube heat exchangers each sized for 100% of the building heating load will convert high pressure steam to hot water. Hot water will be supplied at 180°F and will utilize a high delta-T (40°F minimum) in order to reduce hot water flow rates and reduce pumping energy in the building. A variable flow pumping arrangement with pumps sized at 100% of the building load will be provided.

Air Handlers

The supply air handlers will be custom manufactured with multiple plenum fans, chilled water cooling coils, air washers with bypass dampers, glycol solution pre-heating coils, pre- filters, final filters, outside air intake dampers, return dampers and heat recovery coils. The final filters section shall provide a minimum efficiency reporting value of MERV 13 in accordance with LEED IEQc5 requirements. The air handlers shall be double wall construction with 4-inch thick walls. The internal liner upstream of the air washer section will be perforated galvanized metal. Downstream of the air washer, the liner will be solid galvanized steel.

Two stage cooling will utilized to provide cooling for both the office and lab spaces in this building. The first stage of cooling will be the air washer. The second stage will be provided utilizing chilled water supplied from the campus central utility plant. With this arrangement, the chilled water usage will be reduced and will allow for energy reduction and dependence on the chilled water loop. The air washer can be used to add humidity during the winter months. Consideration should be given to oversizing the air handler length to accomodate a future indirect evaporative cooling coil. The feasibility of adding a central campus water side economizer should be discussed with the owner.

Exhaust air handlers will be installed indoors within a roof mounted penthouse and will be provided with the same construction as the supply air handlers. Heat recovery coils with prefilters will be provided in the exhaust air handlers to recover building energy.

Two supply air handlers will serve the laboratory and office spaces. The sizing of each air handler will be based upon the space usage of the building (laboratory vs. office/conference spaces). The anticipated usage of the lab spaces will be studied in more detail as the design progresses and the need for a 100% outdoor air unit will need to be studied and determined.

Air Distribution

Air will be distributed to spaces through insulation-wrapped, medium-pressure duct systems to the inlet of variable air volume (VAV) terminal units with insulation-lined, low-pressure distribution duct on the outlet side leading to ceiling-mounted air diffusers. In the lab area, diffusers shall be displacement type to limit air velocities near the hoods to 50 FPM. A Ceiling return air plenum will be used in the offices spaces. All air supplied to the lab spaces will be exhausted. Thermostatic zoning will be arranged in order to provide thermal comfort controls for 50% of individual occupant workstations in compliance with LEED IEQc6.2. Separate thermal zones shall be provided for densely occupied spaces, unusual occupancy zones, and corner rooms/offices. No more than three offices will be included on a single thermostatic zone. Utilization of chilled beams should be considered as an energy efficiency measure. Areas with airflow rates driven by cooling load are good candidates for chilled beams and should be studied further. Laboratory areas with airflow requirements driven by exhaust should be avoided.

Laboratory Exhaust

The laboratory fume hoods will be variable volume type. The exhaust from each hood will be controlled by a venturi style variable volume exhaust valve. The laboratory control system will maintain constant 100 FPM face velocity with any sash opening from closed to 18 inches open. A proximity sensor will be used to reduce the face velocity to approximately 60 FPM when no users are near the hood. Variable volume air control valves will also be used to control the exhaust rate in the labs. Supply air valves with reheat coils will also be used. The general exhaust valve will be controlled in conjunction with the supply valve and hood valve to maintain lab temperature and room pressurization. An alarm system will be provide at each hood and will be connected to the Building Automation System. These hoods will be connected to a manifolded exhaust duct system.

The laboratory hood exhaust fans shall be constructed from steel and will include an acid resistant baked phenolic (Heresite) coating on all surfaces. Two fans will be provided, each sized at 60% to provide some redundancy in the event of failure for either fan. Each fan will be installed inside an exterior air handling unit housing with a heat recovery coil and upstream filters. A VFD will be used to control the fan speed to maintain the required exhaust manifold pressure. An auxiliary intake damper at the fan will be provided to maintain stack velocities. Consideration should be given to oversizing exhaust fans in order to reduce fan speed and radiated noise. The heat recovery coils will also require an acid resistant baked phenolic coating on all parts exposed to the exhaust air stream. Dampers will be provide to isolate each fan and system component to allow service while the remaining components are operational. The inside and outside surfaces of the vertical exhaust stack shall also be coated.

The main exhaust ductwork risers and main runs shall be constructed of galvanized sheet metal. Exhaust ducts from fume hoods and other specialized exhaust sources shall be constructed of welded 304 stainless steel. A wind study should be performed to evaluate the prevailing winds and determine the required exhaust velocity. Consideration should be given to a wind-responsive design that would alter the exhaust fan stack velocity based on measured wind speed.

Process Equipment Cooling
Chilled water computer room air units will be used to cool the process equipment in spaces including data/comm, electrical and freezer bank rooms throughout the building. Redundant cooling will be provided by the building air handler and will be sized for 50% of the room cooling load.

Perimeter Radiation
In accordance with USU design guidelines, all exterior offices and labs where building occupants will be seated near large areas of fenestration will be provided with hot water radiation panels. Control for these panels will be zoned to terminal box zones.

Air Intakes and Exhaust
Air intakes shall be positioned to avoid short circuiting of exhaust air back into the building. Every effort shall be made to minimize any entrainment of fumes by strategic location of air intakes. Outdoor air, relief air, and exhaust air shall be ducted to the building exterior. Building mechanical rooms shall not be used as return or relief air plenums in accordance with USU campus standards.

Building Automation Controls
Direct Digital Control (DDC) system with graphics will be provided. The system will be an extension of the campus automation system and will be either Utah-Yamas Controls or Johnson Controls (JCI). All air-handling units, pumps, heat exchangers, VAV, and FPVAV terminal units will have DDC controls, and be tied to the central monitoring and control computer. Any miscellaneous heating or cooling equipment will have self-contained controls. This system will provide control and monitoring for all key system components. Capacity for a 25 percent expansion of control/monitoring points will be provided.

Utility Metering
Flow/Energy meters will be provided on each utility connected to the building including electricity, chilled water, steam/condensate, domestic water, natural gas, and irrigation water. The meters shall meet the minimum requirements of the DFCM HPBS and shall be coordinated with USU Facilities for the meter type and communication protocol.

Domestic Cold Water Service
Domestic cold water will enter the basement mechanical space and connect to the building water header. A separate domestic water branch will connect to the building and connect to the building fire riser located on the main level.

Domestic Hot Water Service
Domestic hot water will be generated in the basement mechanical room. Domestic hot water will be produced by two instantaneous steam-to-domestic hot water heat exchangers. Instantaneous type hot water heaters will be used in lieu of a storage tank type system.

Sanitary Sewer Connection
The building will connect to an existing sanitary sewer main. The depth of the existing sewer line is insufficient to gravity-drain any sewer connections in the basement. A sump pump/sewage ejection pump will be required to serve any sewer connections in the basement.

Storm Water
Storm water will be collected from the roof and routed through the building near roof columns. Consideration should be given to discharging storm water to exterior rain gardens designed to subsist on storm water.

Water Softening
A water softener will be provided on the domestic hot water system. The water softener will be located in the basement mechanical room near the domestic hot water heat exchanger. The Salt brine storage will be oversized and located adjacent to the water softener.

Pure Water System
A new pure water system will be required for the autoclaves and general laboratory usage. The pure water system will consist of a mixing valve, carbon filter, RO membrane, storage tanks, repressure pumps, deionization tanks, UV filtration, and final submicron filtration. The system will be located in the basement mechanical room and piped to the lab areas through a recirculated water loop.

Fire Protection
An Engineered Water Flow Analysis will need to be completed for the new building.

The new building construction shall be protected with a Class I Automatic–Wet, Combined standpipe system.

The sprinkler system supply and floor control assemblies, shall be coordinated with the smoke control zones. Sprinkler systems shall be supplied from the standpipe system.

Laboratory Compressed Air
A compressed air system will be located in the basement mechanical room and will serve the laboratory spaces. A single duplex package is anticipated to be provided to provide system redundancy. The exact size of the instrument air system will require further study and will dictate the number of compressors. Air to laboratories shall be instrument grade and will be filtered to remove hydrocarbons and particles and then dried.

Laboratory Vacuum System
A laboratory vacuum pump will be provided in the basement mechanical room to serve the laboratory spaces. A single duplex package is anticipated to provide system redundancy. Vacuum will be provided at 15” HG minimum to the outlets in laboratories and support areas.

Laboratory Waste System
A complete acid resistant laboratory waste and vent system will be installed throughout the building. An active acid-neutralization system with retention tank, PH monitoring and caustic/acid injection system will be provided. The acid waste system will discharge into the sanitary waste system. The retention tank will be in an enclosed room equipped with a dedicated exhaust system discharging to the roof in order to contain chemical odors.

Sustainable Design

The project goal is LEED Silver per DFCM and USU Design Guidelines. The proposed mechanical credits are as follows:

WEc3 Water Use Reduction
Increase water efficiency within the building by utilizing low flow plumbing fixtures.

EAc1 Optimize Energy Performance
Increase energy performance within the building through architectural, mechanical, and electrical energy efficiency measures.

EAc3 Enhanced Commissioning
A third party commissioning authority will execute a commissioning plan including design review, submittal reviews, equipment testing, and owner training.

EAc4 Enhanced Refrigerant Management
Reduce ozone depletion potential by specifying mechanical equipment that utilizes non-CFC and non-HCFC refrigerants.

IEQc1 Outdoor Air Delivery Monitoring
Provide ventilation system monitoring by monitoring indoor CO2 concentrations within densely occupied spaces and providing airflow measurement stations on air handling systems providing ventilation.

IEQc2 Increased Ventilation
Improve indoor air quality and promote occupant comfort by increasing outdoor air ventilation rates to all occupied spaces by 30% + above ASHRAE 62.1 requirements.

IEQc5 Indoor Chemical & Pollutant Source Control
Minimize building occupant exposure to hazardous pollutants by sufficiently exhausting any spaces where gases or chemicals may be present and improving air handling unit filter performance to MERV 13 (minimum).

IEQc6.2 Thermal Comfort
Improve indoor thermal comfort by providing controls available to building occupants to adjust thermal comfort conditions. A minimum of 50% of individual workstations and all shared multi-occupant spaces will be provided with thermal comfort controls.

IEQc7.1 Thermal Comfort Design
Provide a comfortable indoor thermal environment by designing the HVAC system and building envelope to meet the requirements of ASHRAE Standard 55-2004.

IEQc7.2 Thermal Comfort Verification
Provide an assessment of building thermal comfort satisfaction by performing a survey of building occupants 6 to 18 months after occupancy. If more than 20% of occupants are dissatisfied with thermal comfort a plan for corrective action will be established and implemented.

Existing BNR Building Renovation – North Wing

Building Cooling
With the conversion of the North Wing to a 100% outside air system the cooling load will increase substantially. The chilled water piping should be replaced from the building connection to the tunnel node. New variable volume pumps will be added. Through the course of the design process the pump sizing strategy will be considered as to whether to size the new pumps for the north wing only or the entire BNR building. The north wing remodel will require chilled water for the main air handler chilled water coils and fan coil units serving electrical/data rooms. Coils will be sized for a high delta-T (16°F) in order to reduce pumping energy in the building. Consideration should be given to the phasing of the new piping within the tunnel to minimize building utility interruption.

Building Heating
Two new shell-and-tube heat exchangers each sized for 100% of the north wing heating load will be provided that will convert high pressure steam to hot water. The building heating system will be replaced to utilize hot water radiant heating panels at the building perimeter, hot water reheat coils in VAV terminal units, and a hot water preheat coil in the new supply air handling units. Hot water will be supplied at 180°F and will utilize a high delta-T (40°F minimum) in order to reduce hot water flow rates and reduce pumping energy in the building. A variable flow pumping arrangement with pumps sized at 100% of the north wing heating load will be provided.

Air Handlers
A new 100% outside air handling unit will replace the existing units. It shall be custom manufactured with multiple plenum fans, chilled water cooling coils, air washer with bypass dampers, glycol solution pre-heating coils, pre-filters, final filters, outside air intake dampers, and heat recovery coils. The air handlers shall be double wall construction with 4-inch thick walls. The internal liner upstream of the air washer section will be perforated galvanized metal. Downstream of the air washer, the liner will be solid galvanized steel.

Two stage cooling will utilized to provide cooling for both the office and lab spaces in this building. The first stage of cooling will be the air washer. The second stage will be provided utilizing chilled water supplied from the campus central utility plant. With this arrangement, the chilled water usage will be reduced and will allow for energy reduction and dependence on the chilled water loop. The air washer can be used to add humidity during the winter months.

An exhaust air handler will be installed indoors within a new roof mounted penthouse and will be provided with the same construction as the supply air handler. Heat recovery coils with prefilters will be provided in the exhaust air handler to recover building energy. A single supply air handlers will serve the north wing laboratory and office spaces.

Air Distribution
Air will be distributed to spaces through insulation-wrapped, medium-pressure duct systems to the inlet of variable air volume (VAV) terminal units with insulation-lined, low-pressure distribution duct on the outlet side leading to ceiling-mounted air diffusers. In the lab area, diffusers shall be displacement type to limit air velocities near the hoods to 50 FPM. All air supplied by this air handling system will be exhausted. Air pressurization should be considered in the remodel of the North Wing as a result of changing from a return air system to a 100% outside air system. Neutral air pressure is desireable between building wings with lab spaces negative with respect to corridor spaces. The addition of doors in the corridors should be considered.

Laboratory Exhaust
The laboratory hood exhaust fans shall be located in a new roof mounted penthouse. The fans shall be constructed from steel and will include an acid resistant baked phenolic (Heresite) coating on all surfaces. A minimum of two fans will be provided, each sized at 60% capacity to provide some redundancy in the event of failure of either fan. Each fan will be installed within an air handling unit housing with a heat recovery coil and upstream filters. A VFD will be used to control the fan speed to maintain the required exhaust manifold pressure. An auxiliary intake damper at the fan will be provided to maintain stack velocities. The heat recovery coils will also require an acid resistant baked phenolic coating on all parts exposed to the exhaust air stream. Dampers will be provided to isolate each fan and system component to allow service while the remaining components are operational. The inside and outside surfaces of the vertical exhaust stack shall also be coated.

The main exhaust ductwork risers and main runs shall be constructed of galvanized sheet metal. Exhaust ducts from fume hoods and other specialized exhaust sources shall be constructed of welded 304 stainless steel.

The laboratory fume hoods will be variable volume type. The exhaust from each hood will be controlled by a venturi style variable volume exhaust valve. The laboratory control system will maintain constant 100 FPM face velocity with any sash opening from closed to 18 inches open. A proximity sensor will be used to reduce the face velocity to approximately 60 FPM when no users are near the hood. Variable volume air control valves will also be used to control the exhaust rate in the labs. Supply air valves with reheat coils will also be used. The general exhaust valve will be controlled in conjunction with the supply valve and hood valve to maintain lab temperature and room pressurization. An alarm system will be provided at each hood and will be connected to the Building Automation System. These hoods will be connected to a manifolded exhaust duct system.

Data/Comm/Electrical Rooms
Chilled water computer room air units will be used to cool the data/comm/electrical rooms throughout the building. Redundant cooling will be provided by the building air handler and will be sized for 50% of the room cooling load.

Perimeter Radiation
The existing steam radiators and associated steam and condensate piping will be removed and replaced with new hot water radiators. Control for these panels will be zoned to terminal box zones.

Air Intakes and Exhaust
The air intake for the supply air handler is located in a basement area well and will be reused. The building exhaust is made up of a series of roof mounted exhaust fans. The exhaust system will be manifolded and will discharge on the roof. Every effort shall be made to minimize any entrainment of fumes by maximizing the distance between the exhaust discharge and the building air intake and any operable windows.

Building Automation Controls
The existing pneumatic controls will be demolished and replaced with a Direct Digital Control (DDC) system. The system will be an extension of the campus automation system and will provide maintenance personnel the ability to remotely monitor and troubleshoot operational issues more quickly. The new system will be either Utah-Yamas Controls or Johnson Controls (JCI) in accordance with USU campus guidelines. All air-handling units, pumps, heat exchangers, VAV, and FPVAV terminal units will have DDC controls, and be tied to the central monitoring and control computer. Any miscellaneous heating or cooling equipment will have self-contained controls. This system will provide control and monitoring for all key system components. Capacity for a 25 percent expansion of control/monitoring points will be provided.

Domestic Cold Water Service
It is anticipated that the main piping system and infrastructure will be able to be reused and that the existing plumbing fixtures will be removed and replaced.

Domestic Hot Water Service
It is anticipated that the existing domestic hot water system will be reused.

Pure Water System
The pure water needs of the new research laboratory spaces will be studied throughout the design process.

Fire Protection
The building ceilings will be replaced with the HVAC upgrades and it is anticipated that the extent of work will be to coordinate piping locations and sprinkler heads with new ceilings, ductwork, and diffusers/lighting.

Laboratory Compressed Air and Vacuum
It is anticipated that the existing compressed air and vacuum system will be able to be reused. Existing lab gas fixtures will be removed and replaced.

Laboratory Waste System
The existing acid-dilution style tank should be replaced with an active acid neutralization tank. Space should be provided for PH monitoring and the storage of caustic and acid. The existing glass acid waste piping should be removed and replaced. A dedicated exhaust system discharging to the roof should be added to contain chemical odors.

Existing Cadaver Lab
It is anticipated that the existing air handling unit will remain in place to serve the cadaver lab.

Existing BNR Building Renovation – West Wing Level 1 Lobby Expansion

The existing main entry lobby on the main level is proposed to be expanded by 2,000 sf. This space is anticipated to be space where a large number of people will congregate. The existing building air handling system is not capable of meeting the resulting ventilation and cooling loads and so a separate HVAC system(s) will need to be provided. A new single zone VAV air handling unit with a glycol heating coil and chilled water cooling coil will be provided to serve the lobby. A demand control ventilation sequence should be implemented in order to reduce the ventilation rate and during periods of reduced occupancy.

Existing BNR Building Renovation – Four Story Addition

A four story addition will be added to the northwest corner of the BNR building in the space between the north and west wings of the building. The addition will have a footprint of 1,175 sf per floor which will be made up of a new code compliant stairwell, elevator, toilet rooms, and lobby space. Four-pipe fan coil units will be provided at each level of the stairwell with hot water and chilled water piping being extended from the north wing renovation. The toilet room and lobby areas will be served by the supply and exhaust air handling units being installed as part of the renovation of the north building wing. Domestic water needs will be met by the existing building system. Fire suppression piping will be extended from the existing building system located in either the north or west wing and will require additional study as the design process progresses.

4.5.7 Electrical Systems

BNR BUILDING

General
The electrical systems within the existing building are generally dated and at the end of their useful anticipated life. Equipment and systems outside the remodeled areas generally within the west and south building wings shall remain unless indicated otherwise herein. Equipment and systems within the renovated area, which is primarily the north wing shall be completely removed and replaced with new. There is a small addition to the west for a new Lobby and a few other areas with minor additions, these additions shall be provided with all new equipment and fed from the existing building systems.

Electrical Service
The building is currently fed from the 12.5kV campus distribution system from a manhole on the north-west corner of the existing building. Power comes from this manhole to a medium voltage VFI switch, one 500 kVA at 480Y/277 and one 500 kVA at 280Y/120 located at grade on the north-west corner of the building. According to available USU metered information, the 480V system peak load is approximately 170 kVA and the 208V system peak load is approximately 60 kVA. The main switchboards are rated 1200A at 480Y/277 and 1600A at 208Y/120 located in the basement. The switch, transformers and main switchboards were upgraded around 1995, making them about 20 years old. At this point it is anticipated that these services may need to be upgraded in order to serve the increased loads of the north wing remodel. Final determination shall be made during design to determine if new larger services are required. The building currently has metering of both main distribution panels, this shall remain with no additional power metering required by USU or DFCM. If the distribution panels are upgraded, they shall include main power metering for both distribution voltages.

The existing medium voltage switch and transformers conflict with the planned stair addition on the north-west corner of the building. The switch and transformer will need to be relocated prior to the excavation work for the new stair tower. The medium voltage switch and relocated or new transformer location is expected to be further north-west of the building and may be located either on grade or sub-grade in a vault as determined during design.

Telecommunication Service
The building is currently fed with both copper and fiber services from a manhole on the north-east corner of the existing building. The fiber and copper services into the building are in good condition. There is no new work anticipated

associated with the existing telecomm service. The existing telecomm service shall remain in place. There is a non-dedicated space in part of the basement mechanical room that is used for the main telecomm equipment space, there is not dedicated cooling for the equipment space.

The north wing renovation should include new dedicated telecomm spaces on each level with dedicated cooling on generator power to serve telecomm needs on each level.

Electrical Distribution
The majority of the existing panelboards and feeders are from the original 1960's construction. These panels are beyond their useful life with replacement parts often no longer available. There has been remodel work over time where newer panels have been added, these are in fair condition. In areas outside of the remodel, panels will remain as-is. New electrical rooms should be created within the north wing renovation on each level to serve the power needs associated with the renovation. All new panels, and feeders should be provided for the distribution within the north wing.

Electrical Devices & Outlets
There is a mixture of original devices and outlets with newer devices and outlets that have been installed with remodels over the past 50 years. All devices within the renovation area shall be demolished and new devices provided.

Raceways & Pathways
The majority of the wiring observed is installed within conduit. There is no low voltage cabletray within the building, making changes and remodels more difficult and expensive. Existing conduit may be maintained and reused where possible any abandoned raceway should be demolished. The north wing shall be provided with new cabletray through the corridor to allow for new data cabling and flexibility for future changes.

Surge Protective Devices
No surge protection was observed within any of the existing gear. Surge protection shall be added for both main switchboards and for any branch panels with sensitive or expensive equipment connected to them. Integral surge protection devices shall be provided for all new emergency power panels throughout the building.

Lightning Protection
No lightning protection currently exists for the building; most up-to-date lab buildings of this size with expensive lab equipment have lightning protection. Lightning protection shall be provided for the entire building.

Emergency Service and Distribution:
A small existing diesel generator estimated to be 45 kVA, 208Y/120V is located outside on the north-east corner of the building at grade. There is a single 125A ATS located in the basement feeding emergency lighting with the building. Fume hoods and HVAC are not connected to backup generator power. Lab equipment is not connected to the backup generator power.
A new larger generator shall be provided for emergency power to serve the entire building life-safety emergency lighting and the north wing renovation. Possible considerations will be given to connecting to the existing central plant emergency generator system if there is capacity and the new building is fed emergency power from the central plant, refer to the new building emergency service and distribution section for additional information regarding this option. The generator will not be sized to provide capacity for future west or south wing needs. A minimum of two new ATS's shall be included one to feed emergency and one to feed standby backup generator loads. The following loads shall be connected to backup generator power:

Emergency Distribution Branch (Life Safety)
- Emergency egress and exit lighting
- Fire Alarm

Standby Distribution Branch (Optional Standby), For north wing only
- Building Communications rooms (ER/TR's) – outlets, lights and air conditioning
- Building Electrical rooms – lights and outlets
- Building Security system
- Building Access control system
- Lab Freezers
- Fume Hoods
- HVAC systems serving labs
- Select lab equipment as required by Owner (growth chambers, etc.)

UPS
A small 10 kVA UPS system exists in the basement telecomm space. This USP is sized and currently feeds the IT equipment loads within the building; there is not much if any spare capacity within the current system. A second UPS system with distribution for any critical lab equipment shall be included for the north wing renovation.

Lighting
The lighting is a mixture of original and newer lighting that has been done during remodels within the building. The existing fixtures are old and inefficient. The newer fixtures are generally T8 based fixtures. The lighting within the north wing renovation will be a complete upgrade to new LED based lighting

Lighting Controls
The lighting controls are a mixture of manual light switches throughout the building. A few of the spaces that are more recently remodeled have occupancy sensors within them. Exterior lighting is relay based on a timeclock. New lighting controls meeting current energy codes requirements shall be provided for the north wing renovation. New controls will include occupancy sensors, vacancy sensors, photocells, daylight dimming, dimming/zone controls, and relay panel for common and exterior spaces.

Exterior Lighting
The lighting consists of pedestrian scale metal-halide light poles with the old cube style USU standard that is no longer valid. The poles are generally located along the sidewalk that flanks the perimeter of the building. New LED site fixtures meeting the new USU design standards will be provided along the north and west sides of the building.

Fire Alarm
The existing fire alarm system is newer and was installed within the last few years. New devices will be provided for the renovation and addition areas as required. The new devices shall be connected into the existing Notifier fire alarm system.

Telecomm
The existing phone data system is a mixture of older and more recent data cabling and systems. New data cabling should be provided for remodeled spaces, existing or new devices/cabling may remain. All data cabling shall be provided by USU.

Security Systems - General
The existing access control and card readers are relatively new and in good condition. No CCTV system was observed. Maintain existing access controls system and provide new devices connected to the existing system as needed for any renovation or additions. Provide CCTV locations within the north wing and new lobby as coordinated with USU. CCTV cabling and cameras shall be provided by USU.

Clock System
Clocks are currently battery operated stand-alone clocks. Maintain existing clocks, replace and provide a new wireless self-corrected clock system for the north wing remodel.

BIOLOGICAL SCIENCES BUILDING

Site Electrical
Utah State University owns the medium voltage distribution system that runs throughout campus. The operating voltage is 12,470 V, 3-phase, grounded wye with distribution consisting of underground concrete encased ductbanks, manholes, switches, and cabling. This project shall be responsible for connecting into the medium voltage ductbank system in Manhole "MH12L32." The MV cabling will need to be extended and connected to a switch in Manhole "MH12L4" or "MH12L16", final location shall be coordinated with USU. A new medium voltage VFI vault style switch shall be furnished by USU and installed by the Contractor, this switch shall be located in the transformer vault to provide primary overcurrent protection for the transformers and to serve as the building disconnecting means.

A new concrete encased ductbank consisting of 2 to 5" conduits shall be routed from manhole "MH12L32" to the building transformer vault. A minimum of 1 spare conduit will be required. The transformers will be pole mount style installed within a dedicated transformer vault located in the basement. There shall be two transformer banks providing both 480Y/277V and 208Y/120V secondary voltages for the building. Transformer banks are estimated to be between 1,000-1,500 KVA, the final size will be determined during design once all loads are known.

Telecommunications Utilities
Four (4) 4" conduits from the new main telecommunication equipment room (ER) shall be tied into manhole "MH12L31" or "MH12L2" as coordinated with USU and depending on location of the ER and shall include redundant pathways. All telecomm service cabling shall be designed and installed by USU with funding from the project, exact funding source for the telecommunication cabling shall be confirmed with the Owner.

Building Service and Distribution

Main Service
There will be a transformer vault located in the basement of the building that will house the medium voltage switch and transformers. The transformer vault shall have direct access to outside for a louvered opening to an exterior areaway. The main electrical room will be located in the basement and should be in close proximity to the transformer vault. Service voltage will be 480Y/277V, 3-phase, 4-wire serving primarily mechanical, motor, and building lighting loads with a second service voltage of 3-phase, 4-wire distribution that will serve lab, computer, equipment, plug loads and other small equipment. The main switchboards will be located in the main electrical room and provided with SEL 735 digital metering and network connections back to the central USU metering system. Metering for the building will not include enhanced metering meeting the Utah State DFCM High Performance Building Standard requirements upon Owner request and as approved by DFCM.

Motor Control Centers
Motor control centers will be provided for areas where 3-6 or more across the line motors are grouped. All 3-phase motors will be provided with phase-loss protection. Provide disconnect switches within sight of all motors. Provide variable frequency drives (VFD's) where required for mechanical equipment in compliance with DFCM and Campus requirements, and sized at least 10% over the connected motor load. Minimum total harmonic current distortion when measured at the input terminals of the VFD will be not greater than 15%. The design electrical engineer may evaluate the variety of harmonic filtering and mitigation techniques and choose the best method to achieve this performance. A VFD scheme shall be provided with at least a 50% level of redundancy for the HVAC cooling system. This can be done with multiple drives, redundant drives, or bypass on the VFD as determined most economical and practical for the selected mechanical system.

Panelboards
Distribution panelboards will be provided in vertically stacked electrical rooms for house power and within each SECURE AREA for local SECURE AREA power needs. Branch electrical rooms or closets will be provided to minimize branch circuit runs to 120-150 feet and to separate the electrical panels from the server rooms with the SECURE AREA areas. The electrical rooms are to be centrally located as much as possible, while taking into account other building and architectural considerations. Panelboards should be surface mounted, ease and accessibility of running new and future conduits out of each room is an important consideration in defining the location of the rooms. Panelboards serving normal lighting and outlet circuits will be located on the same floor as the circuits they serve. Each of the labs shall have a surface mounted panel to serve the loads within the room and provide easy access to power for future equipment needs and changes. All branch panelboards will have hinged front covers, as opposed to screw-on or latching covers.

Spare Capacity
Switchboards, and other distribution equipment will be provided with 25% spare capacity and 25% spaces/spares for future growth and flexibility. Lab Panelboards will be provided with 25% spare capacity and 50% spaces/spares for future growth and flexibility. Electrical equipment rooms will have 25% additional space for future equipment where possible.

Branch Circuits
Branch circuits will be loaded to no more than 80% of what is allowed by NFPA 70. Where outlets are intended for a specific piece of equipment, the load of the outlet will be based on the equipment nameplate. Otherwise, no more than 6 convenience outlets per circuit or 4 outlets per circuit serving workstation computer terminals, on average, will be used. Sufficient capacity for plug-in task lights and other peripherals typical of desk items will be provided. Outlets with dedicated branch circuits (one outlet per circuit) are provided for lab spaces, specific lab equipment, lab benches, vending machines, copy machines, break room counters, refrigerators, dishwashers, A/V cabinets and other locations likely to have equipment requiring dedicated circuits. Each branch circuit homerun will have no more than 3 circuits per raceway. Dedicated neutrals for each phase conductor will be provided.

Conductors
All conductors will be copper. Conductors for branch circuits will be sized to prevent voltage drop exceeding 3% at the farthest load. The total voltage drop on both feeders and branch circuits will not exceed 5%. For measurement purposes, a load of 180 VA (1.5A) per outlet, with a 50% diversify factor will be assumed).

Raceways
All raceways are minimum ¾"C. MC-cable is permitted for use in accordance with the USU design standards. Conduit is not allowed to be embedded in concrete slabs. Cable tray system will be such that raceways do not extend more than 50' (approx.) to cable tray. Conduits will be stubbed to the cable tray and contain pull strings. Raceway is included for all security, audio/visual, and technology systems whether furnished as part of the construction contract or furnished by the Owner.

Equipment and Furniture
Furniture and equipment that is identified in the program will be provided with electrical connections.

Fault Current and Coordination Study
A fault current and coordination study will be performed by the contractor to indicate available fault current at all points in the distribution system. New equipment will be rated for the amount of available fault current. Fuses or breakers will be selected to ensure minimum system outage due to overloads or fault currents. Set breakers with adjustable long time, short time, instantaneous and/or ground fault settings for optimum system coordination. Per the 2011 NEC, emergency systems will be selectively coordinated to the extent possible.

Surge Protective Devices
Surge Protective Devices (SPD's) and "noise" protection is provided at service equipment (each main) and on main 120/208V distribution panelboards in the facility which serve computer terminals. SPD units will be integral to the panelboard or switchboard.

It is recommended that additional surge strips be provided under the furnishings and equipment budget on an as-needed basis. The surge strip should be commercial-grade quality and have at least 26 kA per phase maximum surge rating.

Outlets
Outlets will be 20A, minimum. The program and space data sheets will be used as a guideline, but user input will be welcomed during the design. Unless noted otherwise, the following will be used as a general guideline where more specific requirements are not elsewhere identified. Each outlet location will be coordinated with the design team and end user during design. Where the term "outlet" is used, this refers to a 20A duplex receptacle outlet (unless otherwise noted).

Teaching Labs: Provide a minimum of 2 general convenience outlets per wall. Include power for student locations with a minimum of one single-plex outlet planned for each student station. Provide a quad outlet at teacher and AV equipment rack locations and an outlet for each monitor or projector. Additional outlets shall be provided for specific equipment and along counters and work spaces utilizing plug in powered equipment.

Research Labs: Provide a minimum of 2 general convenience outlets per wall. Include power for bench locations with power outlets at 2-3 feet on center. Additional outlets shall be provided for specific equipment. Provide emergency power outlets as required for select lab equipment with a minimum of 4 additional emergency power outlets per lab.

Building ER/MDF: Several outlets on emergency power around perimeter of room with circuit density to allow for at least 100 watts per square foot. Coordinate exact quantity required with the User groups and the anticipated equipment, including future provisions as well. UPS power for at least 1 quad outlet next to each racks.

Building TR/IDF: At least 6 quad outlets on emergency power with circuit density to allow for at least 50 watts per square foot. Provide a minimum 6-outlet surge/power strip in every equipment rack. UPS power for at least 1 quad outlet next to each racks.

Electrical Rooms: At least one outlet on emergency power.

Restrooms: One GFI outlet on wall adjacent to sink at counter height, plus one remote from sink at standard height for breast pumps, vacuum cleaner or power scrubber. Confirm final location with Owner.

Corridors, Lobbies: Provide at least one outlet every 30', on alternating sides of the corridor or lobby.

Offices: Two quad and two duplex outlets, with power on each wall.
Stairs: One outlet at every other landing.

Storage Rooms (small), Janitors Closets: One outlet, near light switch.

Building Exterior: One WP/GFI convenience outlet near each entrance, or a minimum of every 120 feet; additional outlets as needed for special events. Coordinate with users during design.

Other Areas: Refer to individual space plan data sheets, and where not defined coordinate requirements with user during design.

Grounding
All feeder and branch circuit raceways will include an insulated equipment grounding conductor. Provide a grounding riser system throughout the telecommunications closets, server rooms, with grounding bus bars mounted accessibly in each space. All grounding systems will be bonded together per NEC requirements.

Lightning Protection
Provide a lightning protection system for the new Biological Sciences Building. Engage an LPI-certified installer, designer and inspector for the system. Provide a UL Master Label System and comply with NFPA 780.

Emergency Service and Distribution
An emergency diesel generator is to be included with the new building sized for only the new building. Generator may be located in the basement within a generator vault or outdoors in a screened area with weather-protective, level II sound-attenuating housing and skid-mounted, double-walled tank. Fuel supply will be minimum 48 hours per the USU design standards.

An alternate design for connecting to the existing central plant emergency generator system shall be evaluated during schematic design. There is anticipated to be approximately 750 kW of spare capacity available in the existing generator system at the central plant. This design would need to include new power distribution equipment and conductors to extend power from the central plant to the new building through the existing medium voltage ductbank system. Major equipment would include a transformer to boost the voltage from 480 V to 12,470 V, medium voltage switch(es), medium voltage cabling, and distribution transformer to step down from 12,470 V to 480 V. This option shall be carefully evaluated based on cost, Owner preference, user preference, and impact to the overall project. This is currently the preferred option by the University Electrical staff.

Design at least three transfer switches: one for the code required emergency loads, one for non-emergency ("stand-by") loads, and a third for non-emergency ("stand-by") loads. The purpose of the third transfer switch is to allow an additional step of loading to the generator to minimize the overall size of the generator required. Annunciate alarms within the emergency distribution room. Include EPO switch for generator in emergency distribution room. Provide a dedicated emergency power distribution room as required by NFPA 101. Design generator distribution panel with digital metering. Monitor the generator status and alarm through the BAS for remote monitoring by USU campus facilities. The following will be provided with generator backup power:

Emergency Distribution Branch (Life Safety)
- Emergency egress and exit lighting
- Fire Alarm

Standby Building Distribution Branch (Optional Standby)
- Building Communications rooms (ER/TR's) – outlets, lights and air conditioning
- Building Electrical rooms – lights and outlets
- Building Security system
- Building Access control system
- Lab Freezers
- Fume Hoods
- HVAC systems serving labs
- Select lab equipment as required by Owner (growth chambers, etc.)

Lighting

General
The basis for design shall be the IES and its Recommended Practices for labs, classrooms, and other applicable spaces such as exterior environments; Utah State Health Department Requirements or Codes where applicable, i.e. restrooms. For exterior lighting and critical interior spaces a point-by-point plot of illuminance establishing conformance with the Recommended Practices shall be furnished. Light source shall be LED.

IECC requirements shall be met and exceeded to meet the overall project requirement with goals for lighting power density to be 20% less than required. Energy savings design techniques such as daylighting control, occupancy

sensors, centralized and de-centralized control systems, energy efficient lamps/ ballasts shall be used where practical to maximize energy efficiency.

Lab Lighting
In general these spaces shall target 75 FC on the horizontal work plane.

Exterior Lighting
Exterior lighting will use campus standard lighting fixtures and poles for walkways, parking and roadways, compatible with the campus surroundings. All exterior lighting fixtures shall be full cut-off to avoid sky glow and light trespass conditions. Control exterior lighting utilizing combination photocell and time schedule control. Exterior site lighting fixtures shall be LED.

Interior Lighting
Interior lighting will use LED sources for all lighting. HID sources shall not be used within interior spaces. Incandescent sources should be avoided altogether. For laboratory and classroom spaces, recessed or pendant direct/indirect lighting should be strongly considered, but must be carefully coordinated in rooms with line of sight and views. In rooms with projectors or flat panel displays, provide a separate zone of lighting control near the projector input location for ease of controlling lighting during presentations.

For spaces where glare control is not required, LED lay-in fixtures may be used. This includes corridors, workrooms, restrooms, common areas, equipment rooms and storage rooms. Recessed LED downlights and/or decorative LED fixtures shall be used in areas where aesthetics call for an upgraded appearance, such as in main lobbies.

All interior lighting shall be controlled by some automatic means. This shall include vacancy sensors for smaller enclosed areas and relay control with clock and/or timer supervision for larger areas. Large areas should be design for multiple zones and light level control with occupancy sensors to allow energy reduction when the maximum light output is not needed. Uniformity must be maintained when in reduced lighting modes. The corridors and common areas shall be controlled through the lighting control panel which will be connected to the building management system with local wall switch override. Wherever natural daylight is provided, incorporate daylighting controls with daylight sensors and continuous dimming to promote energy savings by using artificial lighting only as needed. All lighting shall be “instant on” to facilitate quick response to demand and power interruptions. Approved lighting controls manufacturers are Wattstopper and NLight for room controls and Wattstopper, NLight, and GE for relay based control systems per USU design standards.

Exit and emergency lighting shall comply with the IBC. Emergency lighting for means of egress to 1 fc average, 0.3 fc minimum, shall be provided. Emergency lighting shall be included in restrooms, electrical rooms, and communication rooms.

The following table summarizes lighting levels and control methods for important spaces.

Lighting Summary Table:

TYPICAL AREA	ILLUMINANCE IN FOOTCANDLES	CONTROLS
Research Lab	75	Vacancy/Dimmable/Override
Teaching Lab	75	Vacancy/Dimmable/Override
Classrooms	50	Vacancy/Dimmable/Override
Corridors/Stairs	15	Relay
Conference Room	50	Vacancy/Dimmable/Override
Janitor Closet	30	Vacancy
Break Room	50	Vacancy/Override
Lobby	20-30	Daylight/Dimming/Relay
Office	30**	Vacancy/Override
Maintenance Areas (Electrical, Mechanical, IT, etc.)	30	Manual Switch
Restrooms	30*	Occupancy
Storage Rooms	10	Vacancy

*UT Health Department Code Required Lighting Level
**Light level for ambient lighting only, additional task lighting shall be provided by Owner

4.5.8 Fire Alarm

Campus Fire Alarm and Life Safety
Comply with Utah State Fire Marshal’s “Rules and Regulations” and USU requirements. Design an addressable system capable of reporting back to central campus security. Design strobes visible from all locations except private offices and coordinate with furniture and equipment plans. Based on preliminary code evaluation and B occupancy type a manual fire alarm system is required per IFC with notification, off site monitoring. In addition to this automatic smoke detection devices are required by Utah State Code amendments and duct detectors with fan shutdown are required by NFPA and IMC. Coordinate location of the building annunciator with the Campus fire marshal. All other detectors and functions will comply with the referenced codes and standards. All fire alarm wiring will be in conduit. Final programming of system will be coordinated with the Campus Fire Marshal to ensure that the program will be compatible with existing campus fire alarm programming. Fire alarm system manufacturer shall be Notifier per USU design standards.

4.5.9 Telecommunication & Specialty Systems

General
Voice/data cabling (structured cabling systems) will be designed, furnished and installed by USU. Provide raceway systems only.

Riser Distribution
Stacked telecommunications closets shall be provided to serve each floor of the building. Equipment layout and wall space will be coordinated with the Campus. Closets are located such that when cabling is routed through the raceway system provided, no cable length will exceed 290’ regardless of the path. Consideration shall be given to the ease and accessibility of running new and future raceways and cables out of each room. Four 4” conduits from the ER to the stacked TR locations are provided and four 4” sleeves between floors. Both normal and emergency circuits are provided to each ER/TR, 3 each, with one fourplex per circuit. One fourplex shall be connected to UPS power within each telecomm room. The air conditioning for these rooms will be backed up by the standby generator. Minimum size for ER shall be 10’x12’ and for the TR’s shall be 10’x8’ per USU. TR rooms shall be provided for each floor and desinged to serve no more than 10,000 s.f. Additional TR rooms shall be provided as necessary. Follow the USU IT design standard requirements.

Horizontal Distribution
A cable tray distribution network shall be provided throughout each floor and into the ER/TR rooms. Cable tray will be routed above corridors, common and similar areas. In all ceiling areas where accessible, provide wire mesh basket-type tray to match existing campus standard, bond conduit to tray. Where ceilings are inaccessible, provide an equivalent conduit system bridging cable trays in accessible ceilings. It will be the designer’s responsibility to size the cable tray and raceway system for the intended cabling installation. Specify that cable runs take routes that will limit the total cable distance, between termination end points, to 290’ or less.

Voice/Data Drops
Each voice/data outlet location will consist of a 4” square box with single gang mud ring and one 1” conduit stubbed to the nearest cable tray. Refer to program space plans for quantities and coordinate exact locations with the users during design. As a minimum, provide one voice/data drop for each workstation, fax machine, copy machine, vending machine, desk, computer terminal and teaching station. Allow one voice/data box per 80 square feet for areas that are not specifically defined. Where wireless networks are designed for student access, still allow sufficient empty raceways for future hardwired connections should the wireless system have insufficient bandwidth for

evolving applications. Wifi coverage shall be provided throughout the facility with access point locations as coordinated with USU IT. USU IT shall install the structured cabling system.

Security Systems - General

Provide access control, and Intrusion Detection systems for the building with locations as identified by the Owner during design. Provide rough-in only for CCTV system, cabling, cameras, and CCTV equipment shall be provided by Owner.

Access Controls

A complete Access Control System (ACS) shall be designed to provide access control of selected doors, that at a minimum shall include all telecommunications and systems termination rooms, select labs, and primary perimeter doors used for building entrance. Door hardware shall be provided as part of the construction contractor's scope of work as it pertains to the access control system. The access control system shall use Schneider Electric as the approved manufacturer and Utah Yamas as the approved installer.

Intrusion Detection

The Intrusion Detection system shall be included. It will include door position indication for all exterior doors, regardless of function (entry/ exit/ exit only/ utility/ etc.) and any interior doors that require access controls.

CCTV Security Systems

Provide rough-in only. At a minimum, provide coverage for all entrances and exits.

Clock System

Self-correcting Primex battery powered wireless clocks to be provided where directed by Owner.

Raceways for Other Low-Voltage Systems

Provide empty raceways for all other low-voltage systems in the building, which will include audio/visual, security, and MATV/CATV. Coordinate with the campus and/or systems designers.

DAS (Distributed Antenna System)

Specifications that describe the technical and performance criteria for deploying a Neutral-Host Distributed Antenna System (DAS) capable of supporting Wireless Service Providers (WSP) and Public Safety Networks (PSN) shall be provided. The DAS components specified in this document shall include: Donor Antennas, Coverage Antennas, Coax Cable, Coax Connectors, Splitters, Combiners, Couplers, Fiber-Optic Cable, Fiber-Optic Connectors, and Fiber-Optic Jumpers, Bi-Directional Amplifiers (BDA), Fiber-Optic Master Unit and Fiber-Optic Remote Units.

Sustainability

Every effort shall be made where economically feasible to incorporate sustainable design into the electrical systems. The LEED credits below are based on LEED v3 (2009). With regard to LEED, the following credits may be included within the design as directed by the Owner.

- SSc8 – Light Pollution Reduction, this credit is not anticipated, due to the limited LEED project boundary and need to provide lighting at the edge of this for the building site and the rest of campus, light trespass requirements are unlikely to be achievable.
- EAc1 – The lighting design will target 20% reduction in lighting energy use to aid in this credit.
- EAc2 – On-Site Renewable Energy, it is not anticipated that this credit will be pursued at this time.
- EAc5 – Measurement and Verification, it is not anticipated that this credit will be pursued at this time.
- EAc6 – Green Power, this credit may be purchased at the discretion of the Owner.
- EQc6.1 – Controllability of Systems, this credit will be pursued and is anticipated to be achieved. The interior lighting will include lighting controls meeting the requirements of this credit.

DFCM High Performance Building System

- The project shall comply with the requirements of the high performance building standard unless specifically indicated otherwise below. The electrical related standards are listed below.
- 5.4(E) – Light Pollution Reduction, this requirement is anticipated to be met.
- 5.5(C)(4) – Lighting power densities, these shall be provided during design as required.
- 5.10(A)(1)(c) – Power Metering, these requirements will not be met, this is based on the Owners direction to only provide main building power metering. This exception has been approved by DFCM Energy Manager.
- 5.14 – Incentives and Rebates, there are no anticipated electrical incentive or rebates associated with this project because the University owns their power distribution system and takes delivery at high voltage from Logan City Power.

4.5.10 Audio-Visual Systems

SUSTAINABILITY

Design audio and video systems to maximize sustainability. Specify Energy Star compliant equipment where appropriate models are available including, but not limited to, video monitors and audio power amplifiers. In addition, specify control systems to be programmed to power off AV systems unused for extended periods of time, and to execute global AV system shutdowns at an Owner designated time of day.

AUDIO AND VIDEO SYSTEMS

General

Audio and video systems will be specified in full compliance with established campus standards. System equipment will be specified for consistency with manufacturers and models identified by the Owner. All video systems will be digitally based, deploying HDBaseT switching, processing, distribution, and transport technology. All video systems will be fully compliant with high definition content protection (HDCP) and extended display identification data (EDID) standards.

350 Seat Lecture Hall and 115 Seat Active Learning Classroom

The large lecture hall and classroom will be provided with fully integrated audio, video, and control systems. Audio systems will amplify the spoken word from instructors, and amplify program audio originating from media source playback devices. Once captured, audio signals will be processed and amplified to a speaker system.

Several media source devices will be provided. These devices will include, but not be limited to, wired connections to portable computers, wireless connections to portable computers, computers resident in furniture, document cameras and DVD players. Audio originating from source devices will be selected, processed, and amplified to a speaker system. In compliance with the Americans with Disabilities Act, a wireless assisted listening system will be provided.

Two electric roll-up, tensioned cabled, 16:9 or 16:10 video projection screens will be provided in each room for the display of media content. Projection screens will be selected and sized using AV industry-wide accepted standards for the nearest and furthest viewers. Projection screen locations will be carefully coordinated with seating layouts to assure appropriate viewing sight lines. Projectors will be specified with a minimum native resolution of 1920

X 1080 in a 16:9 format or 1920 X 1200 in a16:10 format. AV industry-wide accepted standards will be further applied in calculating the required light output from projectors.

HDBaseT matrix video switching and distribution systems will be provided, and will include all required transmitters and scaling receivers. Video systems will include the capability to annotate (write electronically) over displayed video images. Annotation processors will integrate with the Owner's local area network to facilitate the capability to save and print annotated images. Video conferencing systems will not be provided.

Fully integrated control systems will be provided for control of all audio and video system functions and room lighting systems. Human interface will occur using touch screen control panels. To the extent directed by the Owner during the design process, single control commands will result in the execution of multiple AV system, lighting system, and, if applicable, motorized window covering events (Macros). All control system processors will integrate with the Owner's local area network.

Teaching Labs

Labs will be provided with fully integrated audio, video and control systems. Audio systems will not amplify the spoken word from presenters. Instead, audio systems will be used to amplify program audio originating from media source playback devices only. Once captured, audio signals will be processed and amplified to a speaker system.

Several media source devices will be provided. These devices will include, but not be limited to, wired connections to portable computers, wireless connections to portable computers, computers resident in furniture, document cameras and DVD players. Audio originating from source devices will be selected, processed, and amplified to a speaker system. In compliance with the Americans with Disabilities Act, a wireless assisted listening system will be provided.

Electric roll-up, tensioned cabled, 16:9 or 16:10 video projection screens will be provided in each room for the display of media content. Depending on the lab type, one, two, or three projection screens will be provided. Projection screens will be selected and sized using AV industry-wide accepted standards for the nearest and furthest viewers. Projection screen locations will be carefully coordinated with seating layouts to assure appropriate viewing sight lines. Projectors will be specified with a minimum native resolution of 1920 X 1080 in a 16:9 format or 1920 X 1200 in a16:10 format. AV industry-wide accepted standards will be further applied in calculating the required light output from projectors. HDBaseT matrix video switching and distribution systems will be provided, and will include all required transmitters and scaling receivers. Video conferencing systems will not be provided.

Fully integrated control systems will be provided for control of all audio and video system functions and room lighting systems. Human interface will occur using touch screen control panels. To the extent directed by the Owner during the design process, single control commands will result in the execution of multiple AV system, lighting system, and, if applicable, motorized window covering events (Macros). All control system processors will integrate with the Owner's local area network.

Large and Small Group Study Rooms, Tutoring Room and Vertebrate Collection

Each room will be provided with fully integrated audio, video, and control systems. Audio systems will not amplify the spoken word from meeting participants. Instead, audio systems will be used to amplify program audio originating from portable media source devices only. Once captured, audio signals will be processed and amplified to a speaker system.

Each room will be provided with a large screen flat panel LED monitor. Monitors will be selected and sized using AV industry-wide accepted standards for the nearest and furthest viewers. Display locations will be carefully coordinated with seating layouts to assure appropriate viewing sight lines. HDBaseT video switching, processing, and distribution systems will be provided to select portable media source devices and route video images to the display. Resident source devices will not be provided. Video systems will include all required transmitters and scaling receivers. Displays will be specified with a minimum native resolution of 1920 X 1080 in a 16:9 format.

Simple, integrated touch screen control panels will be wall-mounted or table mounted to facilitate user control. All audio and video system control functions, and possibly all lighting control functions, will be accessible via the control panel. All control system processors will integrate with the Owner's local area network.

Large and Small Conference Rooms

Conference rooms will be provided with fully integrated audio, video, and control systems. Audio systems will not amplify the spoken word from presenters and meeting participants. Instead, audio systems will be used to amplify program audio originating from media source playback devices only. Once captured, audio signals will be processed and amplified to a speaker system.

Several media source devices will be provided. These devices will include, but not be limited to, wired connections to portable computers, wireless connections to portable computers, computers resident in furniture and DVD players. Audio originating from source devices will be selected, processed, and amplified to a speaker system. In compliance with the Americans with Disabilities Act, a wireless assisted listening system will be provided. Teleconferencing systems will not be provided.

Electric roll-up, tensioned cabled, 16:9 or 16:10 video projection screens or large screen flat panel monitors will be provided in each room for the display of media content. Displays will be selected and sized using AV industry-wide accepted standards for the nearest and furthest viewers. Display locations will be carefully coordinated with seating layouts to assure appropriate viewing sight lines. Displays will be specified with a minimum native resolution of 1920 X 1080 in a 16:9 format or 1920 X 1200 in a16:10 format. If/where projectors are specified, AV industry-wide accepted standards will be applied in calculating the required light output from projectors. HDBaseT matrix video switching and distribution systems will be provided, and will include all required transmitters and scaling receivers. Video conferencing systems will not be provided.

Fully integrated control systems will be provided for control of all audio and video system functions and room lighting systems. Human interface will occur using touch screen control panels. To the extent directed by the Owner during the design process, single control commands will result in the execution of multiple AV system, lighting system, and, if applicable, motorized window covering events (Macros). All control system processors will integrate with the Owner's local area network.

Facility-wide Digital Signage System

A digital signage system will be provided throughout the building. Approximately 46" diagonal LCD flat panel monitors will be located at elevator lobbies, public lobbies, and select other locations on each floor with appropriate mounting hardware. Small form factor central processing units will be located at each monitor position for IP addressable, Ethernet distribution of content and basic monitor control. The digital signage system will integrate with the campus

digital signage network and software. The digital signage system will also include provisions for visual signage of public address announcements for compliance with the American's with Disabilities Act; provisions for displaying information from the building automation system; and provisions for displaying audio and video content from the central control room.

TV Distribution System
An RF TV distribution system will be provided for distribution of audio and video signals throughout the building. The TV distribution system will be provided with cable, amplifiers, splitters, directional couplers, terminators, outlets, and connectors. The system will be the broadband type, for distribution of low resolution, modulated audio and video signals onto a carrier frequency. A minimum 750 MHz bandwidth will be specified, and all outlets will be provided with between +5 and +10 dBu at each building television outlet.

4.5.11 Acoustical

In order to validate and achieve the goals outlines in this section, an acoustical engineer should be included a part of the project team. The engineer may be hired either by the owner or the design team, as negotiated.
As a hub of student activity, academic inmust successfully balance the need for the social and interactive aspects of the student experience with the quiet, contemplative needs of staff work and academic instruction. In order to accommodate numerous types of public and private space with differing acoustical needs in a single building, the new building must take into account the appropriate sound absorption, acoustical separation, and background noise control measures needed to maintain quiet study spaces while allowing comfortable group study and gathering to occur in the entry and other designated areas of the building.

In order to ensure that the acoustics in each space are optimal for their use, and to ensure the acoustical separation of differing spaces within the building, designers must consider three essential components of sound transmission: the source of sounds, the path of sound waves, and the perception of the receiver. The perception of the receiver can be influenced, and unwanted noise eliminated, by carefully planning the source and path of sound waves. This planning involves a delicate balance of space considerations, background noise, acoustical absorption and acoustical isolation.

Acoustical separation can be accomplished to a great extent through effective space planning. Mediate differing acoustical conditions can be accomplished by zoning the COC spaces to create natural buffer zones between very active and very quiet spaces. Because plans for the design of the COC include a move toward more interactive spaces, and because academic instruction rooms are interspersed throughout the building, each subdivision of space must also be considered individually.

The amount of background noise in a space can have significant impact on the comfort level of its users; too much background noise can be distracting, while too little will only accentuate the noises of conversation, computer keys clicking, and other sounds created through general use. Recommended Noise Criteria (NC) for collegiate spaces are as follows:

Space Type	*NC Rating*
Open Public Areas (Circulation, Lobbies)	35-40
Computer Work Areas	40
Private Offices	30-35
Open Staff Work Areas	35-40
Copy Rooms	40
Teleconference Rooms	max 25
Quiet Study Rooms	25-30
Classrooms, Training Rooms	25-30
Assistive Devices Lab	30-35

Designers may need to consider both sound absorption and sound isolation in the design process to achieve their NC targets. Interior finish materials are the principal contributors to sound absorption. Typically, suspended acoustical ceiling tiles are programmed to prevent sound reflection off the ceiling. The sound absorption properties of typical finish materials, expressed in terms of Noise Reduction Coefficient (NRC), are listed in the following table:

Sound Absorption (Common Building/ Furnishing Materials) and NRC Walls	
Unglazed Brick	0.00
Gypsum Board, ½ inch	0.05
Coarse concrete block	0.35
Shredded wood fiberboard (2" on concrete)	0.75
Floors	
Wood	0.10
Carpet on concrete (no underlay)	0.30
Carpet on foam rubber	0.55
Ceilings	
Plaster on lath	0.05
Suspended acoustical tile, ¾ inch thick	0.95

While sound absorption helps control the noise level within a space, sound isolation helps control the transmission of sound from one space to another. As with sound absorption, STC-rated walls should be used to reduce sound transmission into some spaces and out of others. We recommend STC-rated partitions surrounding or separating programmed spaces in accordance with the following table:

Space Type	*STC*
Open Public Areas	40-45
Computer Work Areas	40-45
Private Offices	45-50
Open Staff Work Areas	45-50
Copy Rooms	50-55
Teleconference Rooms	45-50
Quiet Study Rooms	45-50
Instruction Rooms, Training Rooms	40-45
Lab for Assistive Devices	40-45
Mechanical Rooms	55-65
Elevator Rooms	55-65
Restrooms	55-65

Impact noise or structure-borne vibration can contribute to poor acoustics as much as airborne sound. Such concerns within the COC project include the sounds of footstep on hard surfaces and vibrations created by mechanical equipment. Impact and vibration are expressed in terms of Impact Isolation Class (IIC). We recommend using floor/ceiling assemblies above and/or below the listed spaces having the following IIC ratings:

Space Type	*IIC*
Open Public Areas (Lobby, Lounge)	50
Computer Work Areas	50
Private Offices	50
Open Staff Work Areas	50
Copy Rooms	55
Teleconference Rooms	50
Quiet Study Rooms	50
Instruction Rooms, Training Rooms	50
Lab for Assistive Devices	55
Mechanical Rooms/Penthouse	65*
Elevator Rooms	65*
Restrooms	55

* If this IIC cannot be achieved, design to minimum IIC of 55 and isolate all vibration producing equipment.

Even taking the greatest care in space planning, certain areas within the COC project facility will be more acoustically problematic, particularly if they are areas that require acoustical separation, but are located adjacent to noisy areas. Careful attention to the materials used to finish and furnish each room, acoustical seals and sweeps separating the spaces, and airborne noise from mechanical equipment must be planned for and mitigated.

4.5.12 Vending

The program for the Community Outreach Center includes a small vending area for multiple machines. In addition to power for all machines, data ports should be provided at each machine for monitoring, troubleshooting and re-filling. Hard surfaces as well as floor drains should be provided under all vending machine areas to assist in cleaning up accidental spills.

4.5.13 Elevators

There will be new elevators in both the BNR Building addition and the new Biological Sciences Building. Elevators will necessary to serve both passenger and freight requirements, as well as to accommodate accessible travel between floors.

4.6 Regulatory Codes

4.6.1 Structural

The structural design for this project should provide a building system which will integrate with the program requirements for space layout, as well as with the architectural and building service needs, while meeting current code standards for vertical and horizontal load carrying capacity. User needs in terms of current flexibility of the spaces and future adaptability of use should be considered. (It is assumed that the state legislature will adopt the 2015 building codes during the legislative session)

Codes and Standards

Codes and standards that apply to the design of this building are:

- International Building Code 2015
- ASCE 7 Minimum Design Loads for Buildings and Other Structures
- ACI 318 Building Code Requirements for Reinforced Concrete
- American Institute of Steel Construction (AISC) with Commentary
- American Iron and Steel Institute (AISI) Specifications for the design of Cold-Formed Steel Structural Members
- American Welding Society (ANSI/AWS) D1.1 Structural Welding Code
- Steel Joist Institute (SJI) for open web Joists and Girders
- Steel Deck Institute (SDI) for Metal floor and roof Decks

Geotechnical Criteria

A current geotechnical investigation report for the site is not available at this time. Soil characteristics pertaining to the existing BNR structural design are:
Soil Bearing Pressure: 6,000 psf, on suitable native soil

Design Criteria

The structural systems in the facility shall be designed to meet the requirements of the 2015 International Building Code (IBC). The following minimum requirements should be anticipated:

Risk Category: Category III
Wind Loads: Wind Velocity: 120 mph
Exposure Type: C
Seismic Loads: Short Period Mapped Acceleration: S_s = 0.955 g
Long Period Mapped Acceleration: S_1 = 0.308 g
Site Class: D
Seismic Design Category: D
Seismic Importance Factor, I_e: 1.25 (Risk Category III)

Roof Loads

Roof live loads shall not be less than that specified in IBC 1607.12.
Ground snow, pg: Approximate site elevation = 4790'
Design Ground Snow load pg = 53 psf
Calculate roof snow load as specified in the Utah Uniform Building Standard Act Rules R156-56 issued January 1, 2002. Design for snowdrift where appropriate.
Snow Importance Factor, I_s: 1.1 (Risk Category III)

Floor Live Loads

Minimum floor live loads as required by occupancy.

Floor Vibration

Floor framing systems shall be designed in accordance with ASCE Design Guide 11

Floor vibrations Due to Human Activity. Some laboratory equipment may need more stringent vibration control. These areas will be identified in the design phase.

Construction Materials

Location	f'c at 28 days (psi)	Max W/C Ratio	Air Content (%)	Max Aggregate Size	Exposure Classes*		
					F	S	C
Footings	3000	0.50	-	1"	F0	S0	C0
Interior Slabs on Grade	3000	0.45	-	1"	F0	S0	C0
Exterior Walls	4500	0.45	5	¾"	F1	S0	C1
Lightweight Concrete over Steel Deck	3000	0.45	-	¾"	F0	S0	C0
All other site cast concrete	4500	0.45	4.5	1"	F1	S0	C1

Structural Steel

Material:
W-Shapes: ASTM A992, (Fy = 50 ksi), except as noted otherwise.

- All Other Shapes and Plates: ASTM A36 (Fy = 36 ksi), except as noted otherwise.
- Rectangular and Square Hollow Structural Sections (HSS): ASTM A500, Grade C (Fy = 50 ksi).
- Steel Pipe: ASTM A53, Grade B (Fy = 35 ksi).
- Deformed Bar Anchors (DBA): ASTM A496.
- Headed Stud Anchors (HSA): ASTM A108, with dimensions complying with AISC specifications.
- Anchor Rods: ASTM F1554, Grade 36 with ASTM A563 heavy hex nuts and ASTM F436 hardened washers, unless noted otherwise.

Concrete
Materials shall comply with the Standards specified in American Concrete Institute (ACI) 318-11, "Building Code Requirements for Structural Concrete." Concrete mix design requirements shall be as follows:

** Exposure Classes are per ACI 318, Section 4.2.1, where F,S and C are exposure categories for freezing and thawing, sulfate, and corrosion protection of reinforcement, respectively.*

4.6.2 Mechanical

Codes and Standards
The HVAC system will comply with the following codes and design standards. (It is assumed that the state legislature will adopt the 2015 building codes during the legislative session):

- International Building Code 2015
- International Mechanical Code 2015
- International Plumbing Code 2015
- International Fire Code 2015
- International Energy Conservation Code 2015
- USU A/E Design Manual – 7/7/2014 Version
- ANSI Z9.5 American National Standard for Laboratory Ventilation
- USGBC LEED Silver

Design Criteria

Outdoor Design Conditions:

Design Temperatures, Dry Bulb:	Summer:	93°F
	Winter:	-20°F
Design Temperatures, Coincident Wet Bulb:		
	Summer:	62°F
	Winter:	–
Design Temperatures, Wet Bulb:	Summer:	65°F
	Winter:	–
Elevation:	4,785 feet	

Indoor Design Conditions (Per USU Guidelines):

Conference Rooms, Work Room, Office Areas:

Design Temperature:	Summer:	72 +/- 4°F
	Winter:	68 +/- 4°F
Design Humidity:	Max. 60%	
Ventilation:	ASHRAE 62.1 (Code Minimum)	
Occupancy:	12 hrs./day, 5 days/wk.	

Laboratory and Laboratory Support:

Design Temperature:	Summer:	72°F +/- 4°F
	Winter:	70°F +/- 4°F
Ventilation:	ANSI Z9.5 – 6 ACH Minimum (Occupied)	
Humidity:	30%–59% (if humidity control required)	
Occupancy:	12 hrs./day, 5 days/wk.	

Mechanical Rooms, Electrical Rooms, and Elevator Equip. Rooms:

Design Temperature:	Summer:	85°F (Maximum)
	Winter:	60°F(Minimum)
Design Humidity:	N/A	
Ventilation:	ASHRAE 62.1 (Code Minimum)	
Occupancy:	N/A	

Telephone/Data/Communication/Server Rooms:

Design Temperature:	Year Round:	75°F (Maximum)
Design Humidity:	Max. 60%	
Ventilation:	ASHRAE 62.1 (Code Minimum)	
Occupancy:	N/A	

Design Noise Criteria (Per USU Guidelines)

Design the heating, ventilating and air conditioning systems to meet the ASHRAE and USU AE Design Guidelines:

- Laboratory Areas with Fume Hoods or BSCs: NC = 50 - 55
- Laboratory Areas without Fume Hoods or BSCs: NC = 45 - 50
- Laboratory Support Areas: NC = 50 - 55
- Classrooms: NC = 25 - 30
- Open Offices: NC = 40 - 45
- Private Offices: NC = 30 - 35
- Conference Rooms: NC = 25 - 30
- Circulation Spaces, Lobbies: NC = 35 – 40

Pressure Relationships (Per USU Guidelines)

Design the heating, ventilating and air conditioning systems to meet the following pressure relationships:

- Building: Positive to outside
- Laboratories: Negative to adjacent spaces
- Corridors: Positive to laboratories
- Toilet Rooms: Negative to adjacent spaces

Interior Loads
Interior heat loads will be determined during the design phase. Generally the systems will be designed on the following where specific information is not available:

- Lighting: 1.0 watts s.f.
- Equipment, laboratories: 12 watts s.f.
- Equipment offices: 1.5 watts s.f.

Ventilation for occupants will be 20 cfm per person except where ASHRAE Standard 62 has a greater requirement. Restroom ventilation will be in accordance with the International Mechanical Code with a minimum of 2 cfm exhaust per square foot of area. Fume hood face velocities, in general, will be designed at 100 fpm at 18" sash opening.

Temperature Control Zoning:

Exterior zones:	500 occupiable sf. max
Interior open office zones:	2,000 occupiable sf. max
Walled offices: Maximum of three offices with the same exposure and internal loads (people and equipment)	
Meeting/Conference Rooms:	Separate zones
Print/Special Use Rooms:	Separate zones
Laboratories:	Separate Zones
Computer/Telecomm Server Rooms:	Dedicated equipment

4.6.3 Electrical

Codes which are directly applicable to design of the electrical systems are listed below:

- ADA, Americans with Disabilities Act
- ASHRAE 90.1 Energy Code
- DFCM, Division of Facilities Construction and Management, Design Requirements
- DFCM, State Buildings Energy Standard
- Utah State University Design Standards
- International Energy Conservation Code

- EIA/TIA, Electronics Industries Association/Telecommunications Industry Association
- International Building Code
- IESNA, Illuminating Engineering Society of North America
- NFPA, National Fire Protection Association (applicable sections including but not limited to):
  - NFPA 70, National Electrical Code
  - NFPA 72, National Fire Alarm Code
- UL, Underwriter's Laboratories
- Utah State Fire Marshal Laws, Rules and Regulations

Audio/visual codes, standards, and reference materials

Codes, standards and reference materials which are applicable to the design of the technology systems are listed below. Comply with each of the latest adopted publications. They are part of this BOD by reference and are not restated in the BOD narrative.

USU – Campus Standards
USU – Cabling Standard
ADA, Americans with Disabilities Act
TIA/EIA, Electronics Industries Association/Telecommunications Industry Association
ANSI TIA/EIA 568 C
ANSI TIA/EIA 569 B
BICSI Publication TDMM 12
IBC 2000, International Building Code
NFPA, National Fire Protection Association (applicable sections including but not limited to):
NFPA 70, National Electrical Code
NFPA 72, National Fire Alarm Code
UL, Underwriter's Laboratories
State of Utah Fire Marshal Laws, Rules and Regulations
Audiovisual Best Practices, International Communications Industries Association
Audiovisual Systems Design, International Communications Industries Association
Standard Broadcast Wiring and Installation Practices", as excerpted from "Recommended Wiring Practices," Sound System Engineering, (2nd Edition), D. Davis

System Responsibility Matrix				version 2, 01/19/16
Abbreviations: USU-Owner, A/E-Architect/Engineer, C-Contractor	Specified By	Furnished By	Installed By	Notes
Power				
UPS - Building IT	USU	USU	C	APC
UPS - Lab Power (Both Buildings)	A/E	C	C	APC preferred
Telecomm				
Raceways	A/E	C	C	Boxes, Conduit, Building Cabletray, etc.
Structured Cabling System	USU	USU	USU	Cabling, Patch Panels, etc., USU Standard
Building TR Racks	USU	USU	USU	
Building TR Ladder Tray	USU	USU	USU	
Server Room Racks	USU	USU	USU	
Server Room Ladder Tray	USU	USU	USU	
Emergency Responder DAS Testing	A/E	C	NIC	Testing only to determine signal strength
Emergency Responder DAS System	NIC	NIC	NIC	USU to hold budget in AMA until end of project and testing is completed for the system. Design and Install will occur after testing by Contractor as needed.
Cell Phone Booster System and/or DAS	USU	USU	USU	
Security & Misc.				
Raceways	A/E	C	C	Boxes, Conduit, Building Cabletray, etc.
CCTV Security Camera System	USU	USU	USU	
Access Controls System	A/E	C	C	Schneider Electric/Utah Yamas
Intrusion Detection System	A/E	C	C	
Wireless Clock System	A/E	C	C	Primex
A/V				
Raceways	A/E	C	C	
Audio Systems	A/E	C	C	Verify
Video Systems	A/E	C	C	Verify
IVC Systems	USU	USU	USU	Verify
Digital Signage	A/E	C	C	Verify
Projector Mounts	A/E	C	C	Verify
Projector Screens	A/E	C	C	Verify
TV Distribution System	USU	USU	USU	Verify
Intercom/Paging System	NIC	NIC	NIC	Verify

4.6.4 Civil

The project site will be designed to adhere to the latest version of the USU standards and specifications. The following is a list summarizing items that are above the typical minimum design requirements:

- Division 3 – Concrete: The USU concrete specification is above and beyond the typical concrete requirements. Please refer to division 3 located at http://www.usu.edu/facilities/planning/designreq.cfm for a comprehensive specification.

- Division 31 – Earthwork: It should be noted that division 31 calls for a 98% compaction of earthwork. Division 33 calls for a 96% compaction of earthwork. The 96% compaction rating is more typical. The discrepancy in these specifications should be noted.

- Division 32 – Exterior Improvements: No non-typical items in this division.

- Division 33 - Utilities: All utility installations shall comply with the latest (Utah adopted) editions of the IBC, IMC, IPC, IFGC, IECC, IFC, NEC. Water piping shall have a minimum of 5.5 feet of cover and shall be ductile iron.

4.6.5 Architectural

Codes and Standards

It is anticipated that the state legislature will adopt the 2015 building codes during the legislative session. They include:

- International Building Code 2015
- International Energy Conservation Code 2015
- International Existing Building Code 2015

Other regulatory documents include:

- State of Utah DFCM Design Manual, March 31, 2015
- USU A/E Design Manual – 7/7/2014 Version
- USGBC LEED Silver
- O.S.H.A. Standards
- ANSI Z9.5 American National Standard for Laboratory Ventilation
- Biosafety in Microbiology and Biomedical Laboratories (5th ed.)
- NIH (National Institute of Health) Design Requirements Manual for Biomedical Laboratories and Animal Research Facilities (current edition = 2008. 2015 edition to be used in the near future.)

While it is not the intent of this program do do a complete code review of the new Biological Sciences Building, the following information will inform the layout of the schematic design floor plans:
IBC Chapter 3 - Use and Occupancy Classification:
Business Group B, Educational occupancies above the 12th grade.
Assembly Group A-3, Lecture halls

IBC Chapter 5 - General Building Heights and Areas:
Table 504.3, Maximum height above grade plane = 75 feet (assume occupancy B, type IIB construction, sprinkled building)
Table 504.4 - Allowable number of stories above grade plane = 4 stories (assume B occupancy, Type IIB construction, sprinkled building)
Table 506.2 - Allowable Area Factor = 69,000 sf (assume occupancy B, SM sprinkler sytem, type IIB construction)
Section 506.3 Frontage increase = allowed, calculations to be done during full code review phase
Table 508.4 - Required Separation of Occupancies = 1 hr between A and B

IBC Chapter 6 - Types of Construction:
Table 601, Fire-resistive rating requirements for building elements = 0 hours (assume type IIB construction). Exceptions = fire barriers, fire partitions, smoke barriers and horizontal assemblies.

IBC Chapter 7 - Fire and Smoke Protection Features:
Table 705.8, Maximum area of exterior wall openings based on fire separation distance and degree of opening protection = No Limit (assume 30 feet or greater fire separation distance, unprotected openings, sprinkled building)
Section 713.2, Shaft enclosures shall be constructed as fire barriers
Section 713.4, Shaft enclosures shall have a fire-resistance rating of not less than 2 hours where connecting 4 or more stories
Section 713.7, Openings in shaft asemblies shall be protected
Table 716.5, Minimum fire door and fire shutter assembly in 2 hour wall = 1-1/2 hours

IBC Chapter 8 - Interior Finshes:
Table 803.11, Interior wall and ceiling finishes by occupancy (A, B or C rating)
- Occupancy B, fire-sprinkled:
  - Exit Stairways = B
  - Corridors and enclosures for exit access = C
  - Rooms and enclosed spaces = C
- Occupancy A-3 fire-sprinkled:
  - Exit Stairways = B
  - Corridors and enclosures for exit access = B
  - Rooms and enclosed spaces = C

IBC Chapter 9 - Fire Protection Systems:
An automatic fire sprinkler system may not be required by code, however providing one increases the safety of the occupants as well as decreasing protectives required in other sections of this code. For the purposes of this program it is assumed that the new Biological Sciences Building will be provided with an automatic sprinkling system.

IBC Chapter 10 - Means of Egress:
Table 1004.1.2, Occupant Load:
- Assembly with fixed seats (large lecture hall) = 350 occupants
- Assembly without fixed seats, unconcentrated (small lecture hall) = 15 n.s.f per occupant
- Educational classroom areas = 20 n.s.f per occupant
- Business areas = 100 g.s.f per occupant
- Accessory storage areas/mechanical rooms = 300 g.s.f per occupant

Table 1006.2.1, Spaces with one exit or exit access doorway = 49 occupants or less. Common path of egress travel = 100 feet (assume sprinkled)
Table 1006.3.1, Minimum number of exits or access to exits per story = 2 exits for 500 occupants or less, 3 exits for 501-1000 occupants
Table 1017.2, Exit Access Travel Distance =
- B occupancy = 300 feet (assume sprinkled)
- A occupancy = 250 feet (assume sprinkled)

IBC Chapter 11 - Accessibility
Section 1104.1, Site arrival point = At least one accessible route within the site shall be provided from public transportation stops, accessible parking, accessible passenger loading zones and public streets or sidewalks to the accessible building entrance served.
Section 1105.1, Public Entrances = At least 60% of all public entrances shall be accessible
Section 1108.2.2, Special occupancies, wheelchair spaces. In rooms and spaces used for assembly purposes with fixed seating, accessible wheelchair spaces should be provided.
Table 1108.2.2.1, Accessible Wheelchair Spaces
- Large Lecture Halls (350 seats) = 6 wheelchair spaces
- Small lecture hall (110 seats) = 5 wheelchair spaces

Section 1108.2.3, Companion Seats = At least one companion seat shall be provided for each wheelchair space required.
Section 1108.2.4, Dispersion of wheelchair spaces = In multilevel assembly spaces wheelchair spaces shall be provided on the main level and on one of each additional floor or mezzanine levels.
Sectoon 1109, Toilet facilites = Each toilet room shall be accessible

COST MODEL

5.1 Cost Model

This programming study has been prepared by a design team comprised of CRSA and Payette. To commence the project, the design team reviewed previous studies for the including the Pre-Programming Study, completed in September 2012, and the Biology and Natural Resources Building Remodeling and Addition Master Plan, May 2002. These documents were used by USU as the basis for crafting the FY 2017 Capital Development Project Request and Feasibility Statement. This formal State funding request defined the Biological Science Building project and was the foundational information for the early programming effort. Minor subsequent revisions to this document defined the project as a renovation and new construction project with a total project budget of $69 million.

When this programming effort began, a formal funding request had already been reviewed and ranked by the Regents and Building Board. As the programming phase came to a close in March 2015 the Utah State Legislature was making a formal decision on project funding. The funding request defined the project thoroughly and the programming team made an effort to keep project goals as project drivers. The funding request defined existing square footage allocations by program area and targeted square footage goals for renovation and new construction – defined as BNR Remodel and new Biological Sciences Building. In addition, sources of project allocation by department were outlined. These project planning target have remained rather steady throughout the project programming phase, although test fits of a number of conceptual design options did differ in an attempt to address project phasing, accommodate program and understand project costs.

The total project budget, $69 million, was divided by USU into two funding portions, a $24 million total project budget for the BNR Remodel and $45 million total project budget for the construction of the Biological Sciences Building. USU noted that projects typically allocate 75% to hard costs (construction, general conditions, etc.) and 25% to soft cost (fees, FF&E, moving cost, etc.). Based on this information, the following chart compares the current construction cost estimate with the allocated budget:

	Construction Cost Estimate		Budget		Difference
BNR Building Remodel/Addition	$21,810,000	[1]	$18,000,000	[3]	$ (3,810,000)
New Biological Sciences Building	$ 35,750,000		$ 33,750,000	[2]	$ (2,000,000)
Total	$ 57,560,000		$ 51,750,000		$ (5,810,000)

Notes:
[1] no cost associated with Biology program portions remaining in unrenovated space
[2] 75% of $45,000,000
[3] 75% of $24,000,000

While a significant amount of work will be completed to accommodate the entire set of established project priorities, not all work may be able to be accomplished. Thus, the programming team worked to define a series of additive / deductive alternates that could be included to bring the project into budget alignment. These ideas will be further reviewed and tested during the design phase. These item are defined as:

Options for Cost Alignment - Deductive Alternates / Cost Saving Options

<u>BNR Building</u>	
Seismic Upgrade of North Wing	$2.8 million
(possible capital improvement project)	
North Wing Skin Replacement	$2 million
(possible capital improvement project)	
Upgrade Mechanical in North Wing - Penthouse & Equipment	$1 million
(possible capital improvement project)	
Shell Third Floor of North Wing (less Cadaver Lab)	$2.8 million
Leave Cadaver Lab in BNR as is	$510,000
<u>Biological Sciences Building</u>	
Shell Herbarium Collection area	$1.2 million
Eliminate Herbarium Collection area from building	$810,000
(additional savings from shell)	

Options for Cost Alignment - Additive Alternates / Cost Increase Options

<u>VSB</u>	
Renovate Vacated Labs into Classrooms	$875,000

Capital Improvement Projects are defined in statute as a category of capital projects eligible for funding from an appropriation for capital improvements made to the Division of Facilities Construction and Management (DFCM). These projects are typically remodel, alteration or repair projects with a total cost less than $2.5 million. There are a set of guidelines projects must comply with. USU manages its allocation of capital improvement funds, some of which may be available to complete work in the BNR, including modifications to address changes in use, new programs, and code or state construction standards.

The project has been thoroughly reviewed by Jacobsen Construction, who served as contractibility reviewer and cost estimator for the programming effort. Their work was peer reviewed by Parametrix, Inc. who also completed a thorough cost estimate on the final program and conceptual design. The cost estimates were in alignment, with a difference of 2.7%. The project cost estimate starts on the following page. Comparison cost estimate completed at 90% completion can be found in Appendix Section 6.6

Project funding through the programming effort has been seen as a single funding event, i.e. the Legislature would appropriate the entire project request and the project would include work first to construct a new Biological Sciences Building followed directly by the renovation of elements of the BNR Building. When all work is completed by phase, staff would be decanted from both the BNR and VSB Buildings and move into offices and research labs in newly constructed or renovated space. As there is a great deal more work to be done in the BNR than can be accommodated by this project budget, judicious decisions were made during the programming phase to refine the scope of work found in this document.

Project phasing and associate escalation for delayed project construction have been accommodated within the project cost estimating. The construction industry has seen, and continues to see, a volatility in costs over the last few years following the recession of 2008. It has been difficult to predict construction costs with a degree of certainty. The cost model contained herein will need to be continually checked and refined throughout the development of the project to ensure that the latest information is incorporated as the market fluctuates.

The project delivery method has not been defined, whether design / bid / build or construction manager / general contractor (CM/GC). Both have pros and cons when it comes to cost management during design and construction. Depending on market volatility in incorporation of a CM/GC may allow the design and construction teams to work more closely together to align project vision and costs.

USU BNR Remodel / New Classroom Lab Building - Parametric Estimate - Scheme 6 (Consensus Solution) Rev 0
Based on preliminary program information by CRSA/Payette dated 12 February 2016
19-Feb-16

JACOBSEN Advisory Services

Wing	Floor	Work Scope Option	Scope Description	Area	Net to Gross Factors: Factor 1.315 Net SF	Factor 1.302 Gross SF	Cost Factor: Factor 1.135 Cost / Unit	Total Cost
			Total Project Estimated Cost					$ 57,558,475
			Current Project Budget					
			New Building					$ 33,750,000
			BNR Renovation & Addition(s)					$ 18,000,000
			Total Budget					$ 51,750,000
			Amount Under or (Over) Budget					$ (5,808,475)
			Total Affected Gross SF		**Delta compare to Target GSF**		1,494	163,997
							Target GSF	165,491
			Total Cost / Affected Gross SF				Cost / sf w total project sf $	350.97
							Cost /sf for actual building sf $	372.26

Wing / Area											Work Scope Options							
	West Renovate 1	Cost /SF	North-West New 1.1	Cost /SF	North 2	Cost /SF	South 3	Cost /SF	New Bldg 4	Cost /SF	A: Siesmic Upgrade of North Wing of BNR	Cost /SF	B: North Wing of BNR Exterior Closure Option	Cost /SF	C: Upgrade Mechanical in North Wing of BNR - Penthouse & Eqiupment	Cost /SF	D: Shell-out Herbarium Area and Finish Later	Cost /SF
											6		7		8		9	
	$ -		$ 2,440,497	$ 476.47	$ 18,685,693	$ 416.54	$ 678,987	$ 290.69	$ 35,753,298	$ 349.50	$ 2,790,957	$ 62.22	$ 1,979,857	$ 44.13	$ 1,036,386	$ 23.10	$ 1,200,319	$ 244.71
																	TI Portion Only	
	$ -		$ -		$ -		$ -		$ 33,750,000									
	$ -		$ -		$ 18,000,000		$ -		$ -									
	$ -		$ -		$ 18,000,000		$ -		$ 33,750,000									
	$ -		$ (2,440,497)		$ (685,693)		$ (678,987)		$ (2,003,298)									
	9,380	SF is existing but NIC for $	5,122	Does not include Transformer Vault Area	44,860	Includes Penthouse SF	2,336		102,300	Include Penthouse SF	44,860		44,860		44,860		4,905	
	-		7,540		45,885		2,336		102,888									
	$ -		$ 476.47		$ 416.54		$ 290.69		$ 349.50									

CRSA PAYETTE

USU BNR Remodel / New Classroom Lab Building - Parametric Estimate - Scheme 6 (Consensus Solution) Rev 0
Based on preliminary program information by CRSA/Payette dated 12 February 2016
19-Feb-16

JACOBSEN Advisory Services

Wing	Floor	Work Scope Option	Scope Description	Area	Net to Gross Factors: Factor 1.315 Net SF	Factor 1.302 Gross SF	Cost Factor: Factor 1.135 Cost / Unit	Total Cost	West Renovate 1	Cost /SF	North-West New 1.1	Cost /SF	North 2	Cost /SF	South 3	Cost /SF	New Bldg 4	Cost /SF	A: Siesmic Upgrade of North Wing of BNR 6	Cost /SF	B: North Wing of BNR Exterior Closure Option 7	Cost /SF	C: Upgrade Mechanical in North Wing of BNR - Penthouse & Eqiupment 8	Cost /SF	D: Shell-out Herbarium Area and Finish Later 9	Cost /SF
									Wing / Area										Work Scope Options							
			Substructure / Demo																							
			Total Substructure / Demo					$ 1,307,325	$ -	$ -	$ 84,295	$ 16.46	$ 162,756	$ 3.63	$ 9,279	$ 3.97	$ 1,050,996	$ 10.27	$ -	$ -	$ -	$ -	$ -	$ -	$ -	$ -
			Superstructure																							
			Total Superstructure					$ 5,840,038	$ -	$ -	$ 325,640	$ 63.58	$ 2,128,557	$ 47.45	$ -	$ -	$ 3,385,841	$ 33.10	$ 2,025,000	$ 45.14	$ -	$ -	$ 103,557	$ 2.31	$ -	$ -
			Exterior Closure																							
			Total Exterior Closure					$ 4,961,580	$ -	$ -	$ 373,620	$ 72.94	$ 1,656,460	$ 36.93	$ -	$ -	$ 2,931,500	$ 28.66	$ -	$ -	$ 1,436,500	$ 32.02	$ 219,960	$ 4.90	$ -	$ -
			Roofing																							
			Total Roofing					$ 327,972	$ -	$ -	$ 38,060	$ 7.43	$ 109,712	$ 2.45	$ -	$ -	$ 180,200	$ 1.76	$ -	$ -	$ -	$ -	$ 21,942	$ 0.49	$ -	$ -
			Conveying																							
			Total Conveying					$ 420,000	$ -	$ -	$ 140,000	$ 27.33	$ -	$ -	$ -	$ -	$ 280,000	$ 2.74	$ -	$ -	$ -	$ -	$ -	$ -	$ -	$ -
			Interior Finishes																							
			Total Interior Finishes			102,300		$ 6,498,676	$ -	$ -	$ 217,869	$ 42.54	$ 1,964,546	$ 43.79	$ 108,033	$ 46.25	$ 4,208,228	$ 41.14	$ -	$ -	$ -	$ -	$ 25,538	$ 0.57	$ 247,294	$ 50.42
			Mechanical																							
			Total Mechanical					$ 14,464,766	$ -	$ -	$ 321,725	$ 62.81	$ 4,444,722	$ 99.08	$ 225,345	$ 96.48	$ 9,472,973	$ 92.60	$ -	$ -	$ -	$ -	$ 222,236	$ 4.95	$ 298,122	$ 60.78
			Fire Sprinklers																							
			Total Fire Sprinklers					$ 541,690	$ -	$ -	$ 18,511	$ 3.61	$ 158,064	$ 3.52	$ 8,152	$ 3.49	$ 356,962	$ 3.49	$ -	$ -	$ -	$ -	$ 6,413	$ 0.14	$ 3,702	$ 0.75
			Electrical																							
			Total Electrical					$ 5,291,573	$ -	$ -	$ 151,001	$ 29.48	$ 1,596,340	$ 35.59	$ 75,557	$ 32.35	$ 3,468,674	$ 33.91	$ -	$ -	$ -	$ -	$ 52,312	$ 1.17	$ 126,931	$ 25.88
			Special Systems																							
			Total Special Systems		134,142	170,566		$ 3,043,062	$ -	$ -	$ -	$ -	$ 936,388	$ 20.87	$ 66,278	$ 28.38	$ 2,040,396	$ 19.95	$ -	$ -	$ -	$ -	$ -	$ -	$ 194,851	$ 39.73
			Site work																							
			Total Site work					$ 1,400,000	$ -	$ -	$ 100,000	$ 19.52	$ 400,000	$ 8.92	$ -	$ -	$ 900,000	$ 8.80	$ -	$ -	$ -	$ -	$ 100,000	$ 2.23	$ -	$ -
			Subtotal					$ 44,096,681	$ -		$ 1,770,721		$ 13,557,545		$ 492,644		$ 28,275,770		$ 2,025,000		$ 1,436,500		$ 751,958		$ 870,900	
			General Conditions, Fees, Escalation, & Contingency																							
			Total GCs, Fees, Escalation, & Contingency					$ 13,461,795			$ 669,776		$ 5,128,148		$ 186,343		$ 7,477,527		$ 765,957		$ 543,357		$ 284,428		$ 329,419	
			Total Project Estimated Cost					**$ 57,558,475**	**$ -**		**$ 2,440,497**	**$ 476.47**	**$ 18,685,693**	**$ 416.54**	**$ 678,987**	**$ 290.69**	**$ 35,753,298**	**$ 349.50**	**$ 2,790,957**	**$ 62.22**	**$ 1,979,857**	**$ 44.13**	**$ 1,036,386**	**$ 23.10**	**$ 1,200,319**	**$ 244.71**
			Current Project Budget																						TI Portion Only	
			New Building				$	33,750,000	$ -		$ -		$ -		$ -		$ 33,750,000									
			BNR Renovation & Addition(s)				$	18,000,000	$ -		$ -		$ 18,000,000		$ -		$ -									
			Total Budget				$	51,750,000	$ -		$ -		$ 18,000,000		$ -		$ 33,750,000									
			Amount Under or (Over) Budget				$	(5,808,475)	$ -		$ (2,440,497)		$ (685,693)		$ (678,987)		$ (2,003,298)									
			Total Affected Gross SF	Delta compare to Target GSF		1,494		163,997	9,380	SF is existing but NIC for $	5,122	Does not include Transformer Vault Area	44,860	Includes Penthouse SF	2,336		102,300	Include Penthouse SF	44,860		44,860		44,860		4,905	
				Target GSF				165,491	-		7,540		45,885		2,336		102,888									
			Total Cost / Affected Gross SF	Cost / sf w total project sf			$	350.97	$ -		$ 476.47		$ 416.54		$ 290.69		$ 349.50									
				Cost /sf for actual building sf			$	372.26																		

USU BNR Remodel / New Classroom Lab Building - Parametric Estimate - Scheme 6 (Consensus Solution) Rev 0
Based on preliminary program information by CRSA/Payette dated 12 February 2016
19-Feb-16

Wing	Floor	Work Scope Option	Scope Description	Area	Net to Gross Factors: Factor 1.315 Net SF	Factor 1.302 Gross SF	Cost Factor: Factor 1.135 Cost / Unit	Total Cost	Wing / Area: West Renovate 1	Cost /SF	North-West New 1.1	Cost /SF	North 2	Cost /SF	South 3	Cost /SF	New Bldg 4	Cost /SF	Work Scope Options: A: Siesmic Upgrade of North Wing of BNR 6	Cost /SF	B: North Wing of BNR Exterior Closure Option 7	Cost /SF	C: Upgrade Mechanical in North Wing of BNR - Penthouse & Equipment 8	Cost /SF	D: Shell-out Herbarium Area and Finish Later 9	Cost /SF
			Substructure / Demo																							
2	0	0	Demo	Field Equipment Area	489	637	$ 3.97	$ 2,529	$ -		$ -		$ 2,529		$ -		$ -		$ -		$ -		$ -		$ -	
2	0	0	Demo	Biology Department Administration Area	236	307	$ 3.97	$ 1,221	$ -		$ -		$ 1,221		$ -		$ -		$ -		$ -		$ -		$ -	
2	0	0	Demo	Growth Chambers	237	309	$ 3.97	$ 1,226	$ -		$ -		$ 1,226		$ -		$ -		$ -		$ -		$ -		$ -	
2	0	0	Demo	Freezer	300	391	$ 3.97	$ 1,552	$ -		$ -		$ 1,552		$ -		$ -		$ -		$ -		$ -		$ -	
2	0	0	Demo	AutoClave	316	411	$ 3.97	$ 1,634	$ -		$ -		$ 1,634		$ -		$ -		$ -		$ -		$ -		$ -	
2	0	0	Demo	Gen Equipment Storage Area	335	436	$ 3.97	$ 1,733	$ -		$ -		$ 1,733		$ -		$ -		$ -		$ -		$ -		$ -	
2	0	0	Demo	Building Support Area	117	152	$ 3.97	$ 605	$ -		$ -		$ 605		$ -		$ -		$ -		$ -		$ -		$ -	
2	0	0	Demo	Animal Holding	1,503	1,957	$ 3.97	$ 7,774	$ -		$ -		$ 7,774		$ -		$ -		$ -		$ -		$ -		$ -	
2	0	0	Demo	New Mechanical Area	910	1,185	$ 3.97	$ 4,707	$ -		$ -		$ 4,707		$ -		$ -		$ -		$ -		$ -		$ -	
2	0	0	Demo	Existing Mechanical Area	1,392	1,812	$ 3.97	$ 7,200	$ -		$ -		$ 7,200		$ -		$ -		$ -		$ -		$ -		$ -	
2	0	0	Demo	Vertebrate Collection	1,024	1,333	$ 3.97	$ 5,296	$ -		$ -		$ 5,296		$ -		$ -		$ -		$ -		$ -		$ -	
2	0	0	Demo	Vertebrate Teaching Lab	1,444	1,880	$ -	$ -	$ -		$ -		$ -		$ -		$ -		$ -		$ -		$ -		$ -	
1.1	0	0	Substructure	Toilet Room Area	248	323	$ 10.22	$ 3,298	$ -		$ 3,298		$ -		$ -		$ -		$ -		$ -		$ -		$ -	
1.1	0	0	Substructure	Stair Area	250	326	$ 10.22	$ 3,325	$ -		$ 3,325		$ -		$ -		$ -		$ -		$ -		$ -		$ -	
1.1	0	0	Substructure	Areaway for Transformers	500	651	$ 52.21	$ 33,989	$ -		$ 33,989		$ -		$ -		$ -		$ -		$ -		$ -		$ -	
3	0	0	Demo	Hydrology Lab	1,794	2,336	$ 3.97	$ 9,279	$ -		$ -		$ -		$ 9,279		$ -		$ -		$ -		$ -		$ -	
4	1	0	Substructure	New BNR Classroom Lab Building w Mech Penthouse	102,888	102,888	$ 10.22	$ 1,050,996	$ -		$ -		$ -		$ -		$ 1,050,996		$ -		$ -		$ -		$ -	
1.1	1	0	Substructure	Toilet Room Area	248	323	$ 3.97	$ 1,283	$ -		$ 1,283		$ -		$ -		$ -		$ -		$ -		$ -		$ -	
1.1	1	0	Substructure	Stair Area	250	250	$ 10.22	$ 2,554	$ -		$ 2,554		$ -		$ -		$ -		$ -		$ -		$ -		$ -	
1.1	1	0	Substructure	Lobby Space	2,000	2,604	$ 10.22	$ 26,600	$ -		$ 26,600		$ -		$ -		$ -		$ -		$ -		$ -		$ -	
1	1	0	Demo	Bio Tutoring Area - NIC	424	552	$ -	$ -	$ -		$ -		$ -		$ -		$ -		$ -		$ -		$ -		$ -	
2	1	0	Demo	Study Area	812	1,057	$ 3.97	$ 4,200	$ -		$ -		$ 4,200		$ -		$ -		$ -		$ -		$ -		$ -	
2	1	0	Demo	Office, Mtg Room & Grad Area	1,801	2,345	$ 3.97	$ 9,315	$ -		$ -		$ 9,315		$ -		$ -		$ -		$ -		$ -		$ -	
2	1	0	Demo	Department Administration	2,667	3,472	$ 3.97	$ 13,794	$ -		$ -		$ 13,794		$ -		$ -		$ -		$ -		$ -		$ -	
2	1	0	Demo	Research Lab Suite	2,527	3,290	$ 3.97	$ 13,070	$ -		$ -		$ 13,070		$ -		$ -		$ -		$ -		$ -		$ -	
2	1	0	Demo	Research Lab Support Area	302	393	$ 3.97	$ 1,562	$ -		$ -		$ 1,562		$ -		$ -		$ -		$ -		$ -		$ -	
1.1	2	0	Substructure	Toilet Room Area	248	323	$ 10.22	$ 3,298	$ -		$ 3,298		$ -		$ -		$ -		$ -		$ -		$ -		$ -	
1.1	2	0	Substructure	Stair Area	250	326	$ 10.22	$ 3,325	$ -		$ 3,325		$ -		$ -		$ -		$ -		$ -		$ -		$ -	
1	2	0	Demo	Plant / Pest Diagnostic - NIC	897	1,168	$ -	$ -	$ -		$ -		$ -		$ -		$ -		$ -		$ -		$ -		$ -	
1	2	0	Demo	Research Labs - NIC	992	1,292	$ -	$ -	$ -		$ -		$ -		$ -		$ -		$ -		$ -		$ -		$ -	
1	2	0	Demo	Computational Lab - NIC	675	879	$ -	$ -	$ -		$ -		$ -		$ -		$ -		$ -		$ -		$ -		$ -	
1	2	0	Demo	Plant / Pest Office	207	270	$ -	$ -	$ -		$ -		$ -		$ -		$ -		$ -		$ -		$ -		$ -	
2	2	0	Demo	Study Area	430	560	$ 3.97	$ 2,224	$ -		$ -		$ 2,224		$ -		$ -		$ -		$ -		$ -		$ -	
2	2	0	Demo	Office & Grad Area	1,681	2,189	$ 3.97	$ 8,694	$ -		$ -		$ 8,694		$ -		$ -		$ -		$ -		$ -		$ -	
2	2	0	Demo	Write-Up Area / Small Meeting Room	120	156	$ 3.97	$ 621	$ -		$ -		$ 621		$ -		$ -		$ -		$ -		$ -		$ -	
2	2	0	Demo	USU Insect Collection	1,934	1,934	$ 3.97	$ 7,683	$ -		$ -		$ 7,683		$ -		$ -		$ -		$ -		$ -		$ -	
2	2	0	Demo	USDA Bee Collection	1,472	1,917	$ 3.97	$ 7,613	$ -		$ -		$ 7,613		$ -		$ -		$ -		$ -		$ -		$ -	
2	2	0	Demo	Research Lab Suite	2,543	3,311	$ 3.97	$ 13,153	$ -		$ -		$ 13,153		$ -		$ -		$ -		$ -		$ -		$ -	
2	2	0	Demo	Research Lab Support Area	320	417	$ 3.97	$ 1,655	$ -		$ -		$ 1,655		$ -		$ -		$ -		$ -		$ -		$ -	
1.1	3	0	Substructure	Toilet Room Area	248	323	$ 10.22	$ 3,298	$ -		$ 3,298		$ -		$ -		$ -		$ -		$ -		$ -		$ -	
1.1	3	0	Substructure	Stair Area	250	326	$ 10.22	$ 3,325	$ -		$ 3,325		$ -		$ -		$ -		$ -		$ -		$ -		$ -	
1	3	0	Demo	Research Labs - NIC	3,481	4,532	$ -	$ -	$ -		$ -		$ -		$ -		$ -		$ -		$ -		$ -		$ -	
1	3	0	Demo	Computational Lab - NIC	528	687	$ -	$ -	$ -		$ -		$ -		$ -		$ -		$ -		$ -		$ -		$ -	
2	3	0	Demo	Tutoring Area	314	409	$ 3.97	$ 1,624	$ -		$ -		$ 1,624		$ -		$ -		$ -		$ -		$ -		$ -	
2	3	0	Demo	Office & Grad Area	1,558	2,029	$ 3.97	$ 8,058	$ -		$ -		$ 8,058		$ -		$ -		$ -		$ -		$ -		$ -	
2	3	0	Demo	Write-Up Area/Small Meeting Room	120	156	$ 3.97	$ 621	$ -		$ -		$ 621		$ -		$ -		$ -		$ -		$ -		$ -	
2	3	0	Demo	Study Area	248	323	$ 3.97	$ 1,283	$ -		$ -		$ 1,283		$ -		$ -		$ -		$ -		$ -		$ -	
2	3	0	Demo	Cadaver Laboratory	1,146	1,492	$ 3.97	$ 5,927	$ -		$ -		$ 5,927		$ -		$ -		$ -		$ -		$ -		$ -	
2	3	0	Demo	Human Anatomy Area	960	1,250	$ 3.97	$ 4,965	$ -		$ -		$ 4,965		$ -		$ -		$ -		$ -		$ -		$ -	
2	3	0	Demo	Human Physiology	1,248	1,625	$ 3.97	$ 6,455	$ -		$ -		$ 6,455		$ -		$ -		$ -		$ -		$ -		$ -	
2	3	0	Demo	Research Lab Suite	2,534	3,299	$ 3.97	$ 13,106	$ -		$ -		$ 13,106		$ -		$ -		$ -		$ -		$ -		$ -	
2	3	0	Demo	Research Lab Support Area	320	417	$ 3.97	$ 1,655	$ -		$ -		$ 1,655		$ -		$ -		$ -		$ -		$ -		$ -	
1	0 thru R	0	Demo	CNR Area required to be demo to receive new seismic treatment of West Wing - NIC	4,800	6,250	$ -	$ -	$ -		$ -		$ -		$ -		$ -		$ -		$ -		$ -		$ -	
	0	0	Demo		-	-	$ 3.97	$ -	$ -		$ -		$ -		$ -		$ -		$ -		$ -		$ -		$ -	
			Total Substructure / Demo					**$ 1,307,325**	**$ -**	**$ -**	**$ 84,295**	**$ 16.46**	**$ 162,756**	**$ 3.63**	**$ 9,279**	**$ 3.97**	**$ 1,050,996**	**$ 10.27**	**$ -**	**$ -**	**$ -**	**$ -**	**$ -**	**$ -**	**$ -**	**$ -**
			Superstructure																							
1	0 thru R	0	Seismic Upgrade	Seismic Upgrade - West - NIC		-	$ 850,000.00	$ -	$ -		$ -		$ -		$ -		$ -		$ -		$ -		$ -		$ -	
2	0 thru R	6	Superstructure	Seismic Upgrade - North		1	$ 2,025,000.00	$ 2,025,000	$ -		$ -		$ 2,025,000		$ -		$ -		$ 2,025,000		$ -		$ -		$ -	
3	0	0	Superstructure	Seismic Upgrade - South - NIC		-	$ 1,915,000.00	$ -	$ -		$ -		$ -		$ -		$ -		$ -		$ -		$ -		$ -	
1.1	0 thru R	0	Superstructure	Superstructure - New West	7,540	7,540	$ 31.38	$ 236,583	$ -		$ 236,583		$ -		$ -		$ -		$ -		$ -		$ -		$ -	
4	0 thru R	0	Superstructure	Superstructure w/ penthouse - New Bldg		102,306	$ 31.38	$ 3,210,071	$ -		$ -		$ -		$ -		$ 3,210,071		$ -		$ -		$ -		$ -	
2	R	8	Superstructure	New Penthouse on North Wing / incl seismic impact	2,000	2,000	$ 51.78	$ 103,557	$ -		$ -		$ 103,557		$ -		$ -		$ -		$ -		$ 103,557		$ -	
1.1	0 thru R	0	Superstructure	New Stair Tower - West Addition	1,520	1,979	$ 45.00	$ 89,057	$ -		$ 89,057		$ -		$ -		$ -		$ -		$ -		$ -		$ -	
4	0 thru R	0	Superstructure	New Stair Towers - New Bldg	3,000	3,906	$ 45.00	$ 175,770	$ -		$ -		$ -		$ -		$ 175,770		$ -		$ -		$ -		$ -	
			Total Superstructure					**$ 5,840,038**	**$ -**	**$ -**	**$ 325,640**	**$ 63.58**	**$ 2,128,557**	**$ 47.45**	**$ -**	**$ -**	**$ 3,385,841**	**$ 33.10**	**$ 2,025,000**	**$ 45.14**	**$ -**	**$ -**	**$ 103,557**	**$ 2.31**	**$ -**	**$ -**
			Exterior Closure																							
1	1 thru R	0	Exterior Closure	Exterior Closure - West - NIC	10,600	10,600	$ -	$ -	$ -		$ -		$ -		$ -		$ -		$ -		$ -		$ -		$ -	
1.1	1 thru R	0	Exterior Closure	Exterior Closure - New West	5,748	5,748	$ 65.00	$ 373,620	$ -		$ 373,620		$ -		$ -		$ -		$ -		$ -		$ -		$ -	
2	1 thru R	7	Exterior Closure	Exterior Closure - North	22,100	22,100	$ 65.00	$ 1,436,500	$ -		$ -		$ 1,436,500		$ -		$ -		$ -		$ 1,436,500		$ -		$ -	

USU BNR Remodel / New Classroom Lab Building - Parametric Estimate - Scheme 6 (Consensus Solution) Rev 0
Based on preliminary program information by CRSA/Payette dated 12 February 2016
19-Feb-16

JACOBSEN Advisory Services

Wing	Floor	Work Scope Option	Scope Description	Area	Net to Gross Factors: Factor 1.315 Net SF	Factor 1.302 Gross SF	Cost Factor: Factor 1.135 Cost / Unit	Total Cost	Wing / Area: West Renovate 1	Cost /SF	North-West New 1.1	Cost /SF	North 2	Cost /SF	South 3	Cost /SF	New Bldg 4	Cost /SF	Work Scope Options: A: Siesmic Upgrade of North Wing of BNR 6	Cost /SF	B: North Wing of BNR Exterior Closure Option 7	Cost /SF	C: Upgrade Mechanical in North Wing of BNR - Penthouse & Eqiupment 8	Cost /SF	D: Shell-out Herbarium Area and Finish Later 9	Cost /SF
2	R	8	Exterior Closure	Exterior Closure - North Penthouse	3,384	3,384	$ 65.00	$ 219,960	$ -		$ -		$ 219,960		$ -		$ -		$ -		$ -		$ 219,960		$ -	
3	0	0	Exterior Closure	Exterior Closure - South - NIC	-	-	$ 65.00	$ -	$ -		$ -		$ -		$ -		$ -		$ -		$ -		$ -		$ -	
4	1 thru R	0	Exterior Closure	Exterior Closure - New	45,100	45,100	$ 65.00	$ 2,931,500	$ -		$ -		$ -		$ -		$ 2,931,500		$ -		$ -		$ -		$ -	
			Total Exterior Closure					**$ 4,961,580**	**$ -**	**$ -**	**$ 373,620**	**$ 72.94**	**$ 1,656,460**	**$ 36.93**	**$ -**	**$ -**	**$ 2,931,500**	**$ 28.66**	**$ -**	**$ -**	**$ 1,436,500**	**$ 32.02**	**$ 219,960**	**$ 4.90**	**$ -**	**$ -**
			Roofing																							
1	R	0	Roofing	Roofing - West existing area - NIC	12,624	12,624	$ -	$ -	$ -		$ -		$ -		$ -		$ -		$ -		$ -		$ -		$ -	
1.1	R	0	Roofing	Roofing - West - New Expansion	3,460	3,460	$ 11.00	$ 38,060	$ -		$ 38,060		$ -		$ -		$ -		$ -		$ -		$ -		$ -	
2	R	8	Roofing	Roofing - North - Existing Area impacted by work scope	10,971	10,971	$ 10.00	$ 109,712	$ -		$ -		$ 109,712		$ -		$ -		$ -		$ -		$ 21,942	Penthouse area only	$ -	
3	R	0	Roofing	Roofing - South Existing - NIC	-	-	$ 10.00	$ -	$ -		$ -		$ -		$ -		$ -		$ -		$ -		$ -		$ -	
4	R	0	Roofing	Roofing - New Building	22,525	22,525	$ 8.00	$ 180,200	$ -		$ -		$ -		$ -		$ 180,200		$ -		$ -		$ -		$ -	
			Total Roofing					**$ 327,972**	**$ -**	**$ -**	**$ 38,060**	**$ 7.43**	**$ 109,712**	**$ 2.45**	**$ -**	**$ -**	**$ 180,200**	**$ 1.76**	**$ -**	**$ -**	**$ -**	**$ -**	**$ 21,942**	**$ 0.49**	**$ -**	**$ -**
			Conveying																							
1.1	0	0	Conveying	Elevator - New West Expansion Area		1	$ 140,000.00	$ 140,000	$ -		$ 140,000		$ -		$ -		$ -		$ -		$ -		$ -		$ -	
2	0	0	Conveying	Elevator - North - NIC		-	$ 140,000.00	$ -	$ -		$ -		$ -		$ -		$ -		$ -		$ -		$ -		$ -	
3	0	0	Conveying	Elevator - South - NIC		-	$ 140,000.00	$ -	$ -		$ -		$ -		$ -		$ -		$ -		$ -		$ -		$ -	
4	0	0	Conveying	Elevators - New Building		2	$ 140,000.00	$ 280,000	$ -		$ -		$ -		$ -		$ 280,000		$ -		$ -		$ -		$ -	
			Total Conveying					**$ 420,000**	**$ -**	**$ -**	**$ 140,000**	**$ 27.33**	**$ -**	**$ -**	**$ -**	**$ -**	**$ 280,000**	**$ 2.74**	**$ -**	**$ -**	**$ -**	**$ -**	**$ -**	**$ -**	**$ -**	**$ -**
			Interior Finishes																							
2	0	0	Interior Finishes	Field Equipment Area	490	638	$ 37.74	$ 24,077	$ -		$ -		$ 24,077		$ -		$ -		$ -		$ -		$ -		$ -	
2	0	0	Interior Finishes	Biology Department Administration Area	242	315	$ 37.74	$ 11,891	$ -		$ -		$ 11,891		$ -		$ -		$ -		$ -		$ -		$ -	
2	0	0	Interior Finishes	Growth Chambers	237	309	$ 50.42	$ 15,557	$ -		$ -		$ 15,557		$ -		$ -		$ -		$ -		$ -		$ -	
2	0	0	Interior Finishes	Freezer	300	391	$ 46.25	$ 18,066	$ -		$ -		$ 18,066		$ -		$ -		$ -		$ -		$ -		$ -	
2	0	0	Interior Finishes	AutoClave	316	411	$ 46.25	$ 19,029	$ -		$ -		$ 19,029		$ -		$ -		$ -		$ -		$ -		$ -	
2	0	0	Interior Finishes	Gen Equipment Storage Area	335	436	$ 37.74	$ 16,461	$ -		$ -		$ 16,461		$ -		$ -		$ -		$ -		$ -		$ -	
2	0	0	Interior Finishes	Building Support Area	117	152	$ 37.74	$ 5,749	$ -		$ -		$ 5,749		$ -		$ -		$ -		$ -		$ -		$ -	
2	0	0	Interior Finishes	Animal Holding	1,503	1,957	$ 50.42	$ 98,661	$ -		$ -		$ 98,661		$ -		$ -		$ -		$ -		$ -		$ -	
2	0	0	Interior Finishes	New Mechanical Area	910	1,185	$ 37.74	$ 44,714	$ -		$ -		$ 44,714		$ -		$ -		$ -		$ -		$ -		$ -	
2	0	0	Interior Finishes	Existing Mechanical Area	1,392	1,812	$ 37.74	$ 68,397	$ -		$ -		$ 68,397		$ -		$ -		$ -		$ -		$ -		$ -	
2	0	0	Interior Finishes	Vertebrate Collection	1,024	1,333	$ 50.42	$ 67,218	$ -		$ -		$ 67,218		$ -		$ -		$ -		$ -		$ -		$ -	
2	0	0	Interior Finishes	Vertebrate Teaching Lab	1,444	1,880	$ 50.42	$ 94,788	$ -		$ -		$ 94,788		$ -		$ -		$ -		$ -		$ -		$ -	
1.1	0	0	Interior Finishes	Toilet Room Area	248	323	$ 37.74	$ 12,186	$ -		$ 12,186		$ -		$ -		$ -		$ -		$ -		$ -		$ -	
1.1	0	0	Interior Finishes	Stair Area	250	326	$ 37.74	$ 12,284	$ -		$ 12,284		$ -		$ -		$ -		$ -		$ -		$ -		$ -	
1.1	0	0	Interior Finishes	Areaway for Transformers	500	651	$ 37.74	$ 24,568	$ -		$ 24,568		$ -		$ -		$ -		$ -		$ -		$ -		$ -	
3	0	0	Interior Finishes	Hydrology Lab	1,794	2,336	$ 46.25	$ 108,033	$ -		$ -		$ -		$ 108,033		$ -		$ -		$ -		$ -		$ -	
1.1	1	0	Interior Finishes	Toilet Room Area	248	323	$ 37.74	$ 12,186	$ -		$ 12,186		$ -		$ -		$ -		$ -		$ -		$ -		$ -	
1.1	1	0	Interior Finishes	Stair Area	250	250	$ 37.74	$ 9,435	$ -		$ 9,435		$ -		$ -		$ -		$ -		$ -		$ -		$ -	
1.1	1	0	Interior Finishes	Lobby Space	2,000	2,604	$ 37.74	$ 98,272	$ -		$ 98,272		$ -		$ -		$ -		$ -		$ -		$ -		$ -	
1	1	0	Interior Finishes	Bio Tutoring Area - NIC	424	552	$ -	$ -	$ -		$ -		$ -		$ -		$ -		$ -		$ -		$ -		$ -	
2	1	0	Interior Finishes	Study Area	812	1,057	$ 37.74	$ 39,898	$ -		$ -		$ 39,898		$ -		$ -		$ -		$ -		$ -		$ -	
2	1	0	Interior Finishes	Office, Mtg Room & Grad Area	1,801	2,345	$ 37.74	$ 88,494	$ -		$ -		$ 88,494		$ -		$ -		$ -		$ -		$ -		$ -	
2	1	0	Interior Finishes	Department Administration	2,667	3,472	$ 37.74	$ 131,045	$ -		$ -		$ 131,045		$ -		$ -		$ -		$ -		$ -		$ -	
2	1	0	Interior Finishes	Research Lab Suite	2,527	3,290	$ 50.42	$ 165,879	$ -		$ -		$ 165,879		$ -		$ -		$ -		$ -		$ -		$ -	
2	1	0	Interior Finishes	Research Lab Support Area	302	393	$ 50.42	$ 19,824	$ -		$ -		$ 19,824		$ -		$ -		$ -		$ -		$ -		$ -	
1.1	2	0	Interior Finishes	Toilet Room Area	248	323	$ 37.74	$ 12,186	$ -		$ 12,186		$ -		$ -		$ -		$ -		$ -		$ -		$ -	
1.1	2	0	Interior Finishes	Stair Area	250	326	$ 37.74	$ 12,284	$ -		$ 12,284		$ -		$ -		$ -		$ -		$ -		$ -		$ -	
1	2	0	Interior Finishes	Plant / Pest Diagnostic - NIC	897	1,168	$ -	$ -	$ -		$ -		$ -		$ -		$ -		$ -		$ -		$ -		$ -	
1	2	0	Interior Finishes	Research Labs - NIC	992	1,292	$ -	$ -	$ -		$ -		$ -		$ -		$ -		$ -		$ -		$ -		$ -	
1	2	0	Interior Finishes	Computational Lab - NIC	675	879	$ -	$ -	$ -		$ -		$ -		$ -		$ -		$ -		$ -		$ -		$ -	
1	2	0	Interior Finishes	Plant / Pest Office - NIC	207	270	$ -	$ -	$ -		$ -		$ -		$ -		$ -		$ -		$ -		$ -		$ -	
2	2	0	Interior Finishes	Study Area	430	560	$ 37.74	$ 21,128	$ -		$ -		$ 21,128		$ -		$ -		$ -		$ -		$ -		$ -	
2	2	0	Interior Finishes	Office & Grad Area	1,681	2,189	$ 37.74	$ 82,597	$ -		$ -		$ 82,597		$ -		$ -		$ -		$ -		$ -		$ -	
2	2	0	Interior Finishes	Write-Up Area / Small Meeting Room	120	156	$ 37.74	$ 5,896	$ -		$ -		$ 5,896		$ -		$ -		$ -		$ -		$ -		$ -	
2	2	0	Interior Finishes	USU Insect Collection	1,934	1,934	$ 50.42	$ 97,506	$ -		$ -		$ 97,506		$ -		$ -		$ -		$ -		$ -		$ -	
2	2	0	Interior Finishes	USDA Bee Collection	1,472	1,917	$ 50.42	$ 96,626	$ -		$ -		$ 96,626		$ -		$ -		$ -		$ -		$ -		$ -	
2	2	0	Interior Finishes	Research Lab Suite	2,543	3,311	$ 50.42	$ 166,929	$ -		$ -		$ 166,929		$ -		$ -		$ -		$ -		$ -		$ -	
2	2	0	Interior Finishes	Research Lab Support Area	320	417	$ 50.42	$ 21,006	$ -		$ -		$ 21,006		$ -		$ -		$ -		$ -		$ -		$ -	
1.1	3	0	Interior Finishes	Toilet Room Area	248	323	$ 37.74	$ 12,186	$ -		$ 12,186		$ -		$ -		$ -		$ -		$ -		$ -		$ -	
1.1	3	0	Interior Finishes	Stair Area	250	326	$ 37.74	$ 12,284	$ -		$ 12,284		$ -		$ -		$ -		$ -		$ -		$ -		$ -	
1	3	0	Interior Finishes	Research Labs - NIC	3,481	4,532	$ -	$ -	$ -		$ -		$ -		$ -		$ -		$ -		$ -		$ -		$ -	
1	3	0	Interior Finishes	Computational Lab - NIC	528	687	$ -	$ -	$ -		$ -		$ -		$ -		$ -		$ -		$ -		$ -		$ -	
2	3	0	Interior Finishes	Tutoring Area	314	409	$ 37.74	$ 15,429	$ -		$ -		$ 15,429		$ -		$ -		$ -		$ -		$ -		$ -	
2	3	0	Interior Finishes	Office & Grad Area	1,558	2,029	$ 37.74	$ 76,554	$ -		$ -		$ 76,554		$ -		$ -		$ -		$ -		$ -		$ -	
2	3	0	Interior Finishes	Write-Up Area/Small Meeting Room	120	156	$ 37.74	$ 5,896	$ -		$ -		$ 5,896		$ -		$ -		$ -		$ -		$ -		$ -	
2	3	0	Interior Finishes	Study Area	248	323	$ 37.74	$ 12,186	$ -		$ -		$ 12,186		$ -		$ -		$ -		$ -		$ -		$ -	
2	3	0	Interior Finishes	Cadaver Laboratory	1,146	1,492	$ 50.42	$ 75,226	$ -		$ -		$ 75,226		$ -		$ -		$ -		$ -		$ -		$ -	
2	3	0	Interior Finishes	Human Anatomy Area	960	1,250	$ 50.42	$ 63,017	$ -		$ -		$ 63,017		$ -		$ -		$ -		$ -		$ -		$ -	
2	3	0	Interior Finishes	Human Physiology	1,248	1,625	$ 50.42	$ 81,922	$ -		$ -		$ 81,922		$ -		$ -		$ -		$ -		$ -		$ -	
2	3	0	Interior Finishes	Research Lab Suite	2,534	3,299	$ 50.42	$ 166,338	$ -		$ -		$ 166,338		$ -		$ -		$ -		$ -		$ -		$ -	
2	3	0	Interior Finishes	Research Lab Support Area	320	417	$ 50.42	$ 21,006	$ -		$ -		$ 21,006		$ -		$ -		$ -		$ -		$ -		$ -	
2	R	8	Interior Finishes	New North Wing Penthouse	2,000	2,000	$ 12.77	$ 25,538	$ -		$ -		$ 25,538		$ -		$ -		$ -		$ -		$ 25,538		$ -	

CRSA PAYETTE

USU BNR Remodel / New Classroom Lab Building - Parametric Estimate - Scheme 6 (Consensus Solution) Rev 0
Based on preliminary program information by CRSA/Payette dated 12 February 2016
19-Feb-16

JACOBSEN Advisory Services

Wing	Floor	Work Scope Option	Scope Description	Area	Net to Gross Factors: Net SF (Factor 1.315)	Gross SF (Factor 1.302)	Cost Factor: Cost / Unit (Factor 1.135)	Total Cost	Wing / Area: West Renovate 1	Cost /SF	North-West New 1.1	Cost /SF	North 2	Cost /SF	South 3	Cost /SF	New Bldg 4	Cost /SF	Work Scope Options: A: Siesmic Upgrade of North Wing of BNR 6	Cost /SF	B: North Wing of BNR Exterior Closure Option 7	Cost /SF	C: Upgrade Mechanical in North Wing of BNR - Penthouse & Eqiupment 8	Cost /SF	D: Shell-out Herbarium Area and Finish Later 9	Cost /SF
1	0 thru R	0	Interior Finishes	CNR Area required to be demo to receive new seismic treatment of West Wing - NIC	4,800	6,250	$ -	$ -	$ -		$ -		$ -		$ -		$ -		$ -		$ -		$ -		$ -	
4	0	0	Interior Finishes	Lab Alcove Areas	118	155	$ 50.42	$ 7,821	$ -		$ -		$ -		$ -		$ 7,821		$ -		$ -		$ -		$ -	
4	0	0	Interior Finishes	Plant / Insect Teaching Labs	1,281	1,684	$ 50.42	$ 84,906	$ -		$ -		$ -		$ -		$ 84,906		$ -		$ -		$ -		$ -	
4	0	0	Interior Finishes	Support and Specimen Storage Area	536	705	$ 50.42	$ 35,527	$ -		$ -		$ -		$ -		$ 35,527		$ -		$ -		$ -		$ -	
4	0	9	Interior Finishes	Herbarium	3,731	4,905	$ 50.42	$ 247,294	$ -		$ -		$ -		$ -		$ 247,294		$ -		$ -		$ -		$ 247,294	TI Portion Only
4	0	0	Interior Finishes	Mechanical Area	8,745	11,497	$ 37.74	$ 433,871	$ -		$ -		$ -		$ -		$ 433,871		$ -		$ -		$ -		$ -	
4	0	0	Interior Finishes	Toilet Rooms	500	657	$ 37.74	$ 24,807	$ -		$ -		$ -		$ -		$ 24,807		$ -		$ -		$ -		$ -	
4	0	0	Interior Finishes	Freezer Farm	531	698	$ 46.25	$ 32,287	$ -		$ -		$ -		$ -		$ 32,287		$ -		$ -		$ -		$ -	
4	0	0	Interior Finishes	Growth Chambers	393	517	$ 50.42	$ 26,048	$ -		$ -		$ -		$ -		$ 26,048		$ -		$ -		$ -		$ -	
4	0	0	Interior Finishes	AutoClave	310	408	$ 46.25	$ 18,849	$ -		$ -		$ -		$ -		$ 18,849		$ -		$ -		$ -		$ -	
4	1	0	Interior Finishes	Lobby Space	1,200	1,578	$ 37.74	$ 59,536	$ -		$ -		$ -		$ -		$ 59,536		$ -		$ -		$ -		$ -	
4	1	0	Interior Finishes	Open Study Area	250	329	$ 37.74	$ 12,403	$ -		$ -		$ -		$ -		$ 12,403		$ -		$ -		$ -		$ -	
4	1	0	Interior Finishes	Toilet Rooms	500	657	$ 37.74	$ 24,807	$ -		$ -		$ -		$ -		$ 24,807		$ -		$ -		$ -		$ -	
4	1	0	Interior Finishes	Advising Space	570	749	$ 37.74	$ 28,280	$ -		$ -		$ -		$ -		$ 28,280		$ -		$ -		$ -		$ -	
4	1	0	Interior Finishes	Department Administration	934	1,228	$ 37.74	$ 46,339	$ -		$ -		$ -		$ -		$ 46,339		$ -		$ -		$ -		$ -	
4	1	0	Interior Finishes	Public Health	1,724	2,266	$ 50.42	$ 114,268	$ -		$ -		$ -		$ -		$ 114,268		$ -		$ -		$ -		$ -	
4	1	0	Interior Finishes	CNR GIS Lab	2,510	3,300	$ 50.42	$ 166,365	$ -		$ -		$ -		$ -		$ 166,365		$ -		$ -		$ -		$ -	
4	1	0	Interior Finishes	Active Learning Class Room - 115 P	3,130	4,115	$ 37.74	$ 155,291	$ -		$ -		$ -		$ -		$ 155,291		$ -		$ -		$ -		$ -	
4	1	0	Interior Finishes	Lecture Hall - 350 P	4,446	5,845	$ 37.74	$ 220,582	$ -		$ -		$ -		$ -		$ 220,582		$ -		$ -		$ -		$ -	
4	1	0	Interior Finishes	Study Area	427	561	$ 37.74	$ 21,185	$ -		$ -		$ -		$ -		$ 21,185		$ -		$ -		$ -		$ -	
4	1	0	Interior Finishes	Building Support Area	896	1,178	$ 37.74	$ 44,454	$ -		$ -		$ -		$ -		$ 44,454		$ -		$ -		$ -		$ -	
4	2	0	Interior Finishes	Offices	960	1,262	$ 37.74	$ 47,629	$ -		$ -		$ -		$ -		$ 47,629		$ -		$ -		$ -		$ -	
4	2	0	Interior Finishes	Study Area	582	765	$ 37.74	$ 28,875	$ -		$ -		$ -		$ -		$ 28,875		$ -		$ -		$ -		$ -	
4	2	0	Interior Finishes	Graduate Office Space	885	1,163	$ 37.74	$ 43,908	$ -		$ -		$ -		$ -		$ 43,908		$ -		$ -		$ -		$ -	
4	2	0	Interior Finishes	Meeting Rooms	252	331	$ 37.74	$ 12,503	$ -		$ -		$ -		$ -		$ 12,503		$ -		$ -		$ -		$ -	
4	2	0	Interior Finishes	Toilet Rooms	500	657	$ 37.74	$ 24,807	$ -		$ -		$ -		$ -		$ 24,807		$ -		$ -		$ -		$ -	
4	2	0	Interior Finishes	Advanced Physics Teaching Lab	1,575	2,071	$ 50.42	$ 104,392	$ -		$ -		$ -		$ -		$ 104,392		$ -		$ -		$ -		$ -	
4	2	0	Interior Finishes	General Biology Teaching Labs	5,032	6,615	$ 50.42	$ 333,525	$ -		$ -		$ -		$ -		$ 333,525		$ -		$ -		$ -		$ -	
4	2	0	Interior Finishes	General Biology Prep Area	945	1,242	$ 50.42	$ 62,635	$ -		$ -		$ -		$ -		$ 62,635		$ -		$ -		$ -		$ -	
4	2	0	Interior Finishes	Reasearch Lab Suites	5,112	6,721	$ 50.42	$ 338,828	$ -		$ -		$ -		$ -		$ 338,828		$ -		$ -		$ -		$ -	
4	2	0	Interior Finishes	Dry Lab	721	948	$ 50.42	$ 47,788	$ -		$ -		$ -		$ -		$ 47,788		$ -		$ -		$ -		$ -	
4	2	0	Interior Finishes	Lab Alcove Areas	416	547	$ 50.42	$ 27,573	$ -		$ -		$ -		$ -		$ 27,573		$ -		$ -		$ -		$ -	
4	2	0	Interior Finishes	Lab Support Area	629	827	$ 50.42	$ 41,691	$ -		$ -		$ -		$ -		$ 41,691		$ -		$ -		$ -		$ -	
4	2	0	Interior Finishes	Cold Room	105	138	$ 50.42	$ 6,959	$ -		$ -		$ -		$ -		$ 6,959		$ -		$ -		$ -		$ -	
4	3	0	Interior Finishes	Offices	960	1,262	$ 37.74	$ 47,629	$ -		$ -		$ -		$ -		$ 47,629		$ -		$ -		$ -		$ -	
4	3	0	Interior Finishes	Study Area	1,456	1,914	$ 37.74	$ 72,237	$ -		$ -		$ -		$ -		$ 72,237		$ -		$ -		$ -		$ -	
4	3	0	Interior Finishes	Toilet Rooms	500	657	$ 37.74	$ 24,807	$ -		$ -		$ -		$ -		$ 24,807		$ -		$ -		$ -		$ -	
4	3	0	Interior Finishes	Ecology Teaching Lab	1,575	2,071	$ 50.42	$ 104,392	$ -		$ -		$ -		$ -		$ 104,392		$ -		$ -		$ -		$ -	
4	3	0	Interior Finishes	Lab Support Area	315	414	$ 50.42	$ 20,878	$ -		$ -		$ -		$ -		$ 20,878		$ -		$ -		$ -		$ -	
4	3	0	Interior Finishes	Cell / Mol Bio / Genetics Lab	1,260	1,656	$ 50.42	$ 83,514	$ -		$ -		$ -		$ -		$ 83,514		$ -		$ -		$ -		$ -	
4	3	0	Interior Finishes	Micro Bio Teaching Lab	1,263	1,660	$ 50.42	$ 83,713	$ -		$ -		$ -		$ -		$ 83,713		$ -		$ -		$ -		$ -	
4	3	0	Interior Finishes	Micro Bio Prep Area	630	828	$ 50.42	$ 41,757	$ -		$ -		$ -		$ -		$ 41,757		$ -		$ -		$ -		$ -	
4	3	0	Interior Finishes	Micro Bio Media Prep Area	630	828	$ 50.42	$ 41,757	$ -		$ -		$ -		$ -		$ 41,757		$ -		$ -		$ -		$ -	
4	3	0	Interior Finishes	Micro Bio Teaching Lab	1,240	1,630	$ 50.42	$ 82,188	$ -		$ -		$ -		$ -		$ 82,188		$ -		$ -		$ -		$ -	
4	3	0	Interior Finishes	Research Lab Suites	4,402	5,787	$ 50.42	$ 291,768	$ -		$ -		$ -		$ -		$ 291,768		$ -		$ -		$ -		$ -	
4	3	0	Interior Finishes	Dry Lab	811	1,066	$ 50.42	$ 53,754	$ -		$ -		$ -		$ -		$ 53,754		$ -		$ -		$ -		$ -	
4	3	0	Interior Finishes	BSL-2	629	827	$ 50.42	$ 41,691	$ -		$ -		$ -		$ -		$ 41,691		$ -		$ -		$ -		$ -	
4	3	0	Interior Finishes	Lab Support Area	368	484	$ 50.42	$ 24,391	$ -		$ -		$ -		$ -		$ 24,391		$ -		$ -		$ -		$ -	
4	3	0	Interior Finishes	Cold Rooms	210	276	$ 50.42	$ 13,919	$ -		$ -		$ -		$ -		$ 13,919		$ -		$ -		$ -		$ -	
4	3	0	Interior Finishes	Lab Alcove Areas	420	552	$ 50.42	$ 27,838	$ -		$ -		$ -		$ -		$ 27,838		$ -		$ -		$ -		$ -	
4	3	0	Interior Finishes	Graduate Office Space	1,034	1,359	$ 37.74	$ 51,300	$ -		$ -		$ -		$ -		$ 51,300		$ -		$ -		$ -		$ -	
4	3	0	Interior Finishes	Meeting Rooms	252	331	$ 37.74	$ 12,503	$ -		$ -		$ -		$ -		$ 12,503		$ -		$ -		$ -		$ -	
4	3	0	Interior Finishes	Building Support Area	126	166	$ 37.74	$ 6,251	$ -		$ -		$ -		$ -		$ 6,251		$ -		$ -		$ -		$ -	
4	R	0	Interior Finishes	Penthouse	12,210	12,210	$ 12.77	$ 155,906	$ -		$ -		$ -		$ -		$ 155,906		$ -		$ -		$ -		$ -	
4	0	0	Interior Finishes		-	-	$ 37.74	$ -	$ -		$ -		$ -		$ -		$ -		$ -		$ -		$ -		$ -	
			Total Interior Finishes			**102,300**		**$ 6,498,676**	**$ -**	**$ -**	**$ 217,869**	**$ 42.54**	**$ 1,964,546**	**$ 43.79**	**$ 108,033**	**$ 46.25**	**$ 4,208,228**	**$ 41.14**	**$ -**	**$ -**	**$ -**	**$ -**	**$ 25,538**	**$ 0.57**	**$ 247,294**	**$ 50.42**
			Mechanical																							
2	0	8	Mechanical	Field Equipment Area	490	638	$ 55.73	$ 35,554	$ -		$ -		$ 35,554		$ -		$ -		$ -		$ -		$ 1,778		$ -	
2	0	8	Mechanical	Biology Department Administration Area	242	315	$ 55.73	$ 17,559	$ -		$ -		$ 17,559		$ -		$ -		$ -		$ -		$ 878		$ -	
2	0	8	Mechanical	Growth Chambers	237	309	$ 96.48	$ 29,770	$ -		$ -		$ 29,770		$ -		$ -		$ -		$ -		$ 1,488		$ -	
2	0	8	Mechanical	Freezer	300	391	$ 96.48	$ 37,683	$ -		$ -		$ 37,683		$ -		$ -		$ -		$ -		$ 1,884		$ -	
2	0	8	Mechanical	AutoClave	316	411	$ 96.48	$ 39,693	$ -		$ -		$ 39,693		$ -		$ -		$ -		$ -		$ 1,985		$ -	
2	0	8	Mechanical	Gen Equipment Storage Area	335	436	$ 55.73	$ 24,307	$ -		$ -		$ 24,307		$ -		$ -		$ -		$ -		$ 1,215		$ -	
2	0	8	Mechanical	Building Support Area	117	152	$ 55.73	$ 8,489	$ -		$ -		$ 8,489		$ -		$ -		$ -		$ -		$ 424		$ -	
2	0	8	Mechanical	Animal Holding	1,503	1,957	$ 135.07	$ 264,310	$ -		$ -		$ 264,310		$ -		$ -		$ -		$ -		$ 13,215		$ -	
2	0	8	Mechanical	New Mechanical Area	910	1,185	$ 55.73	$ 66,028	$ -		$ -		$ 66,028		$ -		$ -		$ -		$ -		$ 3,301		$ -	
2	0	8	Mechanical	Existing Mechanical Area	1,392	1,812	$ 55.73	$ 101,001	$ -		$ -		$ 101,001		$ -		$ -		$ -		$ -		$ 5,050		$ -	
2	0	8	Mechanical	Vertebrate Collection	1,024	1,333	$ 135.07	$ 180,075	$ -		$ -		$ 180,075		$ -		$ -		$ -		$ -		$ 9,004		$ -	
2	0	8	Mechanical	Vertebrate Teaching Lab	1,444	1,880	$ 135.07	$ 253,934	$ -		$ -		$ 253,934		$ -		$ -		$ -		$ -		$ 12,697		$ -	
1.1	0	0	Mechanical	Toilet Room Area	248	323	$ 55.73	$ 17,995	$ -		$ 17,995		$ -		$ -		$ -		$ -		$ -		$ -		$ -	
1.1	0	0	Mechanical	Stair Area	250	326	$ 55.73	$ 18,140	$ -		$ 18,140		$ -		$ -		$ -		$ -		$ -		$ -		$ -	
1.1	0	0	Mechanical	Areaway for Transformers	500	651	$ 55.73	$ 36,279	$ -		$ 36,279		$ -		$ -		$ -		$ -		$ -		$ -		$ -	
3	0	0	Mechanical	Hydrology Lab	1,794	2,336	$ 96.48	$ 225,345	$ -		$ -		$ -		$ 225,345		$ -		$ -		$ -		$ -		$ -	
1.1	1	0	Mechanical	Toilet Room Area	248	323	$ 55.73	$ 17,995	$ -		$ 17,995		$ -		$ -		$ -		$ -		$ -		$ -		$ -	
1.1	1	0	Mechanical	Stair Area	250	250	$ 55.73	$ 13,932	$ -		$ 13,932		$ -		$ -		$ -		$ -		$ -		$ -		$ -	
1.1	1	0	Mechanical	Lobby Space	2,000	2,604	$ 55.73	$ 145,117	$ -		$ 145,117		$ -		$ -		$ -		$ -		$ -		$ -		$ -	

CRSA PAYETTE

USU BNR Remodel / New Classroom Lab Building - Parametric Estimate - Scheme 6 (Consensus Solution) Rev 0

Based on preliminary program information by CRSA/Payette dated 12 February 2016

19-Feb-16

JACOBSEN Advisory Services

Wing	Floor	Work Scope Option	Scope Description	Area	Net to Gross Factors: Factor 1.315 Net SF	Factor 1.302 Gross SF	Cost Factor: Factor 1.135 Cost / Unit	Total Cost	Wing / Area: West Renovate 1	Cost /SF	North-West New 1.1	Cost /SF	North 2	Cost /SF	South 3	Cost /SF	New Bldg 4	Cost /SF	Work Scope Options: A: Siesmic Upgrade of North Wing of BNR 6	Cost /SF	B: North Wing of BNR Exterior Closure Option 7	Cost /SF	C: Upgrade Mechanical in North Wing of BNR - Penthouse & Eqiupment 8	Cost /SF	D: Shell-out Herbarium Area and Finish Later 9	Cost /SF
1	1	0	Mechanical	Bio Tutoring Area - NIC	424	552	$ -	$ -	$ -		$ -		$ -		$ -		$ -		$ -		$ -		$ -		$ -	
2	1	8	Mechanical	Study Area	812	1,057	$ 55.73	$ 58,918	$ -		$ -		$ 58,918		$ -		$ -		$ -		$ -		$ 2,946		$ -	
2	1	8	Mechanical	Office, Mtg Room & Grad Area	1,801	2,345	$ 55.73	$ 130,678	$ -		$ -		$ 130,678		$ -		$ -		$ -		$ -		$ 6,534		$ -	
2	1	8	Mechanical	Department Administration	2,667	3,472	$ 55.73	$ 193,514	$ -		$ -		$ 193,514		$ -		$ -		$ -		$ -		$ 9,676		$ -	
2	1	8	Mechanical	Research Lab Suite	2,527	3,290	$ 135.07	$ 444,385	$ -		$ -		$ 444,385		$ -		$ -		$ -		$ -		$ 22,219		$ -	
2	1	8	Mechanical	Research Lab Support Area	302	393	$ 135.07	$ 53,108	$ -		$ -		$ 53,108		$ -		$ -		$ -		$ -		$ 2,655		$ -	
1.1	2	0	Mechanical	Toilet Room Area	248	323	$ 55.73	$ 17,995	$ -		$ 17,995		$ -		$ -		$ -		$ -		$ -		$ -		$ -	
1.1	2	0	Mechanical	Stair Area	250	326	$ 55.73	$ 18,140	$ -		$ 18,140		$ -		$ -		$ -		$ -		$ -		$ -		$ -	
1	2	0	Mechanical	Plant / Pest Diagnostic - NIC	897	1,168	$ -	$ -	$ -		$ -		$ -		$ -		$ -		$ -		$ -		$ -		$ -	
1	2	0	Mechanical	Research Labs - NIC	992	1,292	$ -	$ -	$ -		$ -		$ -		$ -		$ -		$ -		$ -		$ -		$ -	
1	2	0	Mechanical	Computational Lab - NIC	675	879	$ -	$ -	$ -		$ -		$ -		$ -		$ -		$ -		$ -		$ -		$ -	
1	2	0	Mechanical	Plant / Pest Office	207	270	$ -	$ -	$ -		$ -		$ -		$ -		$ -		$ -		$ -		$ -		$ -	
2	2	8	Mechanical	Study Area	430	560	$ 55.73	$ 31,200	$ -		$ -		$ 31,200		$ -		$ -		$ -		$ -		$ 1,560		$ -	
2	2	8	Mechanical	Office & Grad Area	1,681	2,189	$ 55.73	$ 121,971	$ -		$ -		$ 121,971		$ -		$ -		$ -		$ -		$ 6,099		$ -	
2	2	8	Mechanical	Write-Up Area / Small Meeting Room	120	156	$ 55.73	$ 8,707	$ -		$ -		$ 8,707		$ -		$ -		$ -		$ -		$ 435		$ -	
2	2	8	Mechanical	USU Insect Collection	1,934	1,934	$ 135.07	$ 261,216	$ -		$ -		$ 261,216		$ -		$ -		$ -		$ -		$ 13,061		$ -	
2	2	8	Mechanical	USDA Bee Collection	1,472	1,917	$ 135.07	$ 258,858	$ -		$ -		$ 258,858		$ -		$ -		$ -		$ -		$ 12,943		$ -	
2	2	8	Mechanical	Research Lab Suite	2,543	3,311	$ 135.07	$ 447,198	$ -		$ -		$ 447,198		$ -		$ -		$ -		$ -		$ 22,360		$ -	
2	2	8	Mechanical	Research Lab Support Area	320	417	$ 135.07	$ 56,273	$ -		$ -		$ 56,273		$ -		$ -		$ -		$ -		$ 2,814		$ -	
1.1	3	0	Mechanical	Toilet Room Area	248	323	$ 55.73	$ 17,995	$ -		$ 17,995		$ -		$ -		$ -		$ -		$ -		$ -		$ -	
1.1	3	0	Mechanical	Stair Area	250	326	$ 55.73	$ 18,140	$ -		$ 18,140		$ -		$ -		$ -		$ -		$ -		$ -		$ -	
1	3	0	Mechanical	Research Labs - NIC	3,481	4,532	$ -	$ -	$ -		$ -		$ -		$ -		$ -		$ -		$ -		$ -		$ -	
1	3	0	Mechanical	Computational Lab - NIC	528	687	$ -	$ -	$ -		$ -		$ -		$ -		$ -		$ -		$ -		$ -		$ -	
2	3	8	Mechanical	Tutoring Area	314	409	$ 55.73	$ 22,783	$ -		$ -		$ 22,783		$ -		$ -		$ -		$ -		$ 1,139		$ -	
2	3	8	Mechanical	Office & Grad Area	1,558	2,029	$ 55.73	$ 113,046	$ -		$ -		$ 113,046		$ -		$ -		$ -		$ -		$ 5,652		$ -	
2	3	8	Mechanical	Write-Up Area/Small Meeting Room	120	156	$ 55.73	$ 8,707	$ -		$ -		$ 8,707		$ -		$ -		$ -		$ -		$ 435		$ -	
2	3	8	Mechanical	Study Area	248	323	$ 55.73	$ 17,995	$ -		$ -		$ 17,995		$ -		$ -		$ -		$ -		$ 900		$ -	
2	3	8	Mechanical	Cadaver Laboratory	1,146	1,492	$ 135.07	$ 201,529	$ -		$ -		$ 201,529		$ -		$ -		$ -		$ -		$ 10,076		$ -	
2	3	8	Mechanical	Human Anatomy Area	960	1,250	$ 135.07	$ 168,820	$ -		$ -		$ 168,820		$ -		$ -		$ -		$ -		$ 8,441		$ -	
2	3	8	Mechanical	Human Physiology	1,248	1,625	$ 135.07	$ 219,467	$ -		$ -		$ 219,467		$ -		$ -		$ -		$ -		$ 10,973		$ -	
2	3	8	Mechanical	Research Lab Suite	2,534	3,299	$ 135.07	$ 445,616	$ -		$ -		$ 445,616		$ -		$ -		$ -		$ -		$ 22,281		$ -	
2	3	8	Mechanical	Research Lab Support Area	320	417	$ 135.07	$ 56,273	$ -		$ -		$ 56,273		$ -		$ -		$ -		$ -		$ 2,814		$ -	
2	R	8	Mechanical	New North Wing Penthouse	2,000	2,000	$ 33.03	$ 66,057	$ -		$ -		$ 66,057		$ -		$ -		$ -		$ -		$ 3,303		$ -	
1	0 thru R	0	Mechanical	CNR Area required to be demo to receive new seismic treatment of West Wing - NIC	4,800	6,250	$ -	$ -	$ -		$ -		$ -		$ -		$ -		$ -		$ -		$ -		$ -	
4	0	0	Mechanical	Lab Alcove Areas	118	155	$ 135.07	$ 20,953	$ -		$ -		$ -		$ -		$ 20,953		$ -		$ -		$ -		$ -	
4	0	0	Mechanical	Plant / Insect Teaching Labs	1,281	1,684	$ 135.07	$ 227,460	$ -		$ -		$ -		$ -		$ 227,460		$ -		$ -		$ -		$ -	
4	0	0	Mechanical	Support and Specimen Storage Area	536	705	$ 135.07	$ 95,175	$ -		$ -		$ -		$ -		$ 95,175		$ -		$ -		$ -		$ -	
4	0	9	Mechanical	Herbarium	3,731	4,905	$ 135.07	$ 662,493	$ -		$ -		$ -		$ -		$ 662,493		$ -		$ -		$ -		$ 298,122	TI Portion Only
4	0	0	Mechanical	Mechanical Area	8,745	11,497	$ 55.73	$ 640,694	$ -		$ -		$ -		$ -		$ 640,694		$ -		$ -		$ -		$ -	
4	0	0	Mechanical	Toilet Rooms	500	657	$ 55.73	$ 36,632	$ -		$ -		$ -		$ -		$ 36,632		$ -		$ -		$ -		$ -	
4	0	0	Mechanical	Freezer Farm	531	698	$ 96.48	$ 67,348	$ -		$ -		$ -		$ -		$ 67,348		$ -		$ -		$ -		$ -	
4	0	0	Mechanical	Growth Chambers	393	517	$ 96.48	$ 49,845	$ -		$ -		$ -		$ -		$ 49,845		$ -		$ -		$ -		$ -	
4	0	0	Mechanical	AutoClave	310	408	$ 96.48	$ 39,318	$ -		$ -		$ -		$ -		$ 39,318		$ -		$ -		$ -		$ -	
4	1	0	Mechanical	Lobby Space	1,200	1,578	$ 55.73	$ 87,917	$ -		$ -		$ -		$ -		$ 87,917		$ -		$ -		$ -		$ -	
4	1	0	Mechanical	Open Study Area	250	329	$ 55.73	$ 18,316	$ -		$ -		$ -		$ -		$ 18,316		$ -		$ -		$ -		$ -	
4	1	0	Mechanical	Toilet Rooms	500	657	$ 55.73	$ 36,632	$ -		$ -		$ -		$ -		$ 36,632		$ -		$ -		$ -		$ -	
4	1	0	Mechanical	Advising Space	570	749	$ 55.73	$ 41,760	$ -		$ -		$ -		$ -		$ 41,760		$ -		$ -		$ -		$ -	
4	1	0	Mechanical	Department Administration	934	1,228	$ 55.73	$ 68,429	$ -		$ -		$ -		$ -		$ 68,429		$ -		$ -		$ -		$ -	
4	1	0	Mechanical	Public Health	1,724	2,266	$ 135.07	$ 306,121	$ -		$ -		$ -		$ -		$ 306,121		$ -		$ -		$ -		$ -	
4	1	0	Mechanical	CNR GIS Lab	2,510	3,300	$ 135.07	$ 445,687	$ -		$ -		$ -		$ -		$ 445,687		$ -		$ -		$ -		$ -	
4	1	0	Mechanical	Active Learning Class Room - 115 P	3,130	4,115	$ 55.73	$ 229,316	$ -		$ -		$ -		$ -		$ 229,316		$ -		$ -		$ -		$ -	
4	1	0	Mechanical	Lecture Hall - 350 P	4,446	5,845	$ 55.73	$ 325,732	$ -		$ -		$ -		$ -		$ 325,732		$ -		$ -		$ -		$ -	
4	1	0	Mechanical	Study Area	427	561	$ 55.73	$ 31,284	$ -		$ -		$ -		$ -		$ 31,284		$ -		$ -		$ -		$ -	
4	1	0	Mechanical	Building Support Area	896	1,178	$ 55.73	$ 65,645	$ -		$ -		$ -		$ -		$ 65,645		$ -		$ -		$ -		$ -	
4	2	0	Mechanical	Offices	960	1,262	$ 55.73	$ 70,333	$ -		$ -		$ -		$ -		$ 70,333		$ -		$ -		$ -		$ -	
4	2	0	Mechanical	Study Area	582	765	$ 55.73	$ 42,640	$ -		$ -		$ -		$ -		$ 42,640		$ -		$ -		$ -		$ -	
4	2	0	Mechanical	Graduate Office Space	885	1,163	$ 55.73	$ 64,839	$ -		$ -		$ -		$ -		$ 64,839		$ -		$ -		$ -		$ -	
4	2	0	Mechanical	Meeting Rooms	252	331	$ 55.73	$ 18,463	$ -		$ -		$ -		$ -		$ 18,463		$ -		$ -		$ -		$ -	
4	2	0	Mechanical	Toilet Rooms	500	657	$ 55.73	$ 36,632	$ -		$ -		$ -		$ -		$ 36,632		$ -		$ -		$ -		$ -	
4	2	0	Mechanical	Advanced Physics Teaching Lab	1,575	2,071	$ 135.07	$ 279,664	$ -		$ -		$ -		$ -		$ 279,664		$ -		$ -		$ -		$ -	
4	2	0	Mechanical	General Biology Teaching Labs	5,032	6,615	$ 135.07	$ 893,505	$ -		$ -		$ -		$ -		$ 893,505		$ -		$ -		$ -		$ -	
4	2	0	Mechanical	General Biology Prep Area	945	1,242	$ 135.07	$ 167,799	$ -		$ -		$ -		$ -		$ 167,799		$ -		$ -		$ -		$ -	
4	2	0	Mechanical	Reasearch Lab Suites	5,112	6,721	$ 135.07	$ 907,710	$ -		$ -		$ -		$ -		$ 907,710		$ -		$ -		$ -		$ -	
4	2	0	Mechanical	Dry Lab	721	948	$ 135.07	$ 128,024	$ -		$ -		$ -		$ -		$ 128,024		$ -		$ -		$ -		$ -	
4	2	0	Mechanical	Lab Alcove Areas	416	547	$ 135.07	$ 73,867	$ -		$ -		$ -		$ -		$ 73,867		$ -		$ -		$ -		$ -	
4	2	0	Mechanical	Lab Support Area	629	827	$ 135.07	$ 111,688	$ -		$ -		$ -		$ -		$ 111,688		$ -		$ -		$ -		$ -	
4	2	0	Mechanical	Cold Room	105	138	$ 135.07	$ 18,644	$ -		$ -		$ -		$ -		$ 18,644		$ -		$ -		$ -		$ -	
4	3	0	Mechanical	Offices	960	1,262	$ 55.73	$ 70,333	$ -		$ -		$ -		$ -		$ 70,333		$ -		$ -		$ -		$ -	
4	3	0	Mechanical	Study Area	1,456	1,914	$ 55.73	$ 106,672	$ -		$ -		$ -		$ -		$ 106,672		$ -		$ -		$ -		$ -	
4	3	0	Mechanical	Toilet Rooms	500	657	$ 55.73	$ 36,632	$ -		$ -		$ -		$ -		$ 36,632		$ -		$ -		$ -		$ -	
4	3	0	Mechanical	Ecology Teaching Lab	1,575	2,071	$ 135.07	$ 279,664	$ -		$ -		$ -		$ -		$ 279,664		$ -		$ -		$ -		$ -	
4	3	0	Mechanical	Lab Support Area	315	414	$ 135.07	$ 55,933	$ -		$ -		$ -		$ -		$ 55,933		$ -		$ -		$ -		$ -	
4	3	0	Mechanical	Cell / Mol Bio / Genetics Lab	1,260	1,656	$ 135.07	$ 223,731	$ -		$ -		$ -		$ -		$ 223,731		$ -		$ -		$ -		$ -	
4	3	0	Mechanical	Micro Bio Teaching Lab	1,263	1,660	$ 135.07	$ 224,264	$ -		$ -		$ -		$ -		$ 224,264		$ -		$ -		$ -		$ -	
4	3	0	Mechanical	Micro Bio Prep Area	630	828	$ 135.07	$ 111,866	$ -		$ -		$ -		$ -		$ 111,866		$ -		$ -		$ -		$ -	
4	3	0	Mechanical	Micro Bio Media Prep Area	630	828	$ 135.07	$ 111,866	$ -		$ -		$ -		$ -		$ 111,866		$ -		$ -		$ -		$ -	
4	3	0	Mechanical	Micro Bio Teaching Lab	1,240	1,630	$ 135.07	$ 220,180	$ -		$ -		$ -		$ -		$ 220,180		$ -		$ -		$ -		$ -	

CRSA PAYETTE

USU BNR Remodel / New Classroom Lab Building - Parametric Estimate - Scheme 6 (Consensus Solution) Rev 0
Based on preliminary program information by CRSA/Payette dated 12 February 2016
19-Feb-16

					Net to Gross Factors		Cost Factor			Wing / Area										Work Scope Options							
					Factor 1.315	Factor 1.302	Factor 1.135			West Renovate 1	Cost /SF	North-West New 1.1	Cost /SF	North 2	Cost /SF	South 3	Cost /SF	New Bldg 4	Cost /SF	A: Siesmic Upgrade of North Wing of BNR	Cost /SF	B: North Wing of BNR Exterior Closure Option	Cost /SF	C: Upgrade Mechanical in North Wing of BNR - Penthouse & Eqiupment	Cost /SF	D: Shell-out Herbarium Area and Finish Later	Cost /SF
Wing	Floor	Work Scope Option	Scope Description	Area	Net SF	Gross SF	Cost / Unit		Total Cost											6		7		8		9	
4	3	0	Mechanical	Research Lab Suites	4,402	5,787	$ 135.07	$	781,639	$ -		$ -		$ -		$ -		$ 781,639		$ -		$ -		$ -		$ -	
4	3	0	Mechanical	Dry Lab	811	1,066	$ 135.07	$	144,005	$ -		$ -		$ -		$ -		$ 144,005		$ -		$ -		$ -		$ -	
4	3	0	Mechanical	BSL-2	629	827	$ 135.07	$	111,688	$ -		$ -		$ -		$ -		$ 111,688		$ -		$ -		$ -		$ -	
4	3	0	Mechanical	Lab Support Area	368	484	$ 135.07	$	65,344	$ -		$ -		$ -		$ -		$ 65,344		$ -		$ -		$ -		$ -	
4	3	0	Mechanical	Cold Rooms	210	276	$ 135.07	$	37,289	$ -		$ -		$ -		$ -		$ 37,289		$ -		$ -		$ -		$ -	
4	3	0	Mechanical	Lab Alcove Areas	420	552	$ 135.07	$	74,577	$ -		$ -		$ -		$ -		$ 74,577		$ -		$ -		$ -		$ -	
4	3	0	Mechanical	Graduate Office Space	1,034	1,359	$ 55.73	$	75,755	$ -		$ -		$ -		$ -		$ 75,755		$ -		$ -		$ -		$ -	
4	3	0	Mechanical	Meeting Rooms	252	331	$ 55.73	$	18,463	$ -		$ -		$ -		$ -		$ 18,463		$ -		$ -		$ -		$ -	
4	3	0	Mechanical	Building Support Area	126	166	$ 55.73	$	9,231	$ -		$ -		$ -		$ -		$ 9,231		$ -		$ -		$ -		$ -	
4	R	0	Mechanical	Penthouse	12,210	12,210	$ 33.03	$	403,278	$ -		$ -		$ -		$ -		$ 403,278		$ -		$ -		$ -		$ -	
4	0	0	Mechanical		-	-	$ 55.73	$	-	$ -		$ -		$ -		$ -		$ -		$ -		$ -		$ -		$ -	
4	0	0	Mechanical		-	-	$ 55.73	$	-	$ -		$ -		$ -		$ -		$ -		$ -		$ -		$ -		$ -	
4	0	0	Mechanical		-	-	$ 55.73	$	-	$ -		$ -		$ -		$ -		$ -		$ -		$ -		$ -		$ -	
			Total Mechanical					**$**	**14,464,766**	**$ -**	**$ -**	**$ 321,725**	**$ 62.81**	**$ 4,444,722**	**$ 99.08**	**$ 225,345**	**$ 96.48**	**$ 9,472,973**	**$ 92.60**	**$ -**	**$ -**	**$ -**	**$ -**	**$ 222,236**	**$ 4.95**	**$ 298,122**	**$ 60.78**
			Fire Sprinklers																								
2	0	0	Fire Sprinklers	Field Equipment Area	490	638	$ 3.21	$	2,046	$ -		$ -		$ 2,046		$ -		$ -		$ -		$ -		$ -		$ -	
2	0	0	Fire Sprinklers	Biology Department Administration Area	242	315	$ 3.21	$	1,010	$ -		$ -		$ 1,010		$ -		$ -		$ -		$ -		$ -		$ -	
2	0	0	Fire Sprinklers	Growth Chambers	237	309	$ 3.49	$	1,077	$ -		$ -		$ 1,077		$ -		$ -		$ -		$ -		$ -		$ -	
2	0	0	Fire Sprinklers	Freezer	300	391	$ 3.49	$	1,363	$ -		$ -		$ 1,363		$ -		$ -		$ -		$ -		$ -		$ -	
2	0	0	Fire Sprinklers	AutoClave	316	411	$ 3.49	$	1,436	$ -		$ -		$ 1,436		$ -		$ -		$ -		$ -		$ -		$ -	
2	0	0	Fire Sprinklers	Gen Equipment Storage Area	335	436	$ 3.21	$	1,399	$ -		$ -		$ 1,399		$ -		$ -		$ -		$ -		$ -		$ -	
2	0	0	Fire Sprinklers	Building Support Area	117	152	$ 3.21	$	488	$ -		$ -		$ 488		$ -		$ -		$ -		$ -		$ -		$ -	
2	0	0	Fire Sprinklers	Animal Holding	1,503	1,957	$ 3.77	$	7,385	$ -		$ -		$ 7,385		$ -		$ -		$ -		$ -		$ -		$ -	
2	0	0	Fire Sprinklers	New Mechanical Area	910	1,185	$ 3.21	$	3,799	$ -		$ -		$ 3,799		$ -		$ -		$ -		$ -		$ -		$ -	
2	0	0	Fire Sprinklers	Existing Mechanical Area	1,392	1,812	$ 3.21	$	5,811	$ -		$ -		$ 5,811		$ -		$ -		$ -		$ -		$ -		$ -	
2	0	0	Fire Sprinklers	Vertebrate Collection	1,024	1,333	$ 3.77	$	5,032	$ -		$ -		$ 5,032		$ -		$ -		$ -		$ -		$ -		$ -	
2	0	0	Fire Sprinklers	Vertebrate Teaching Lab	1,444	1,880	$ 3.77	$	7,095	$ -		$ -		$ 7,095		$ -		$ -		$ -		$ -		$ -		$ -	
1.1	0	0	Fire Sprinklers	Toilet Room Area	248	323	$ 3.21	$	1,035	$ -		$ 1,035		$ -		$ -		$ -		$ -		$ -		$ -		$ -	
1.1	0	0	Fire Sprinklers	Stair Area	250	326	$ 3.21	$	1,044	$ -		$ 1,044		$ -		$ -		$ -		$ -		$ -		$ -		$ -	
1.1	0	0	Fire Sprinklers	Areaway for Transformers	500	651	$ 3.21	$	2,087	$ -		$ 2,087		$ -		$ -		$ -		$ -		$ -		$ -		$ -	
3	0	0	Fire Sprinklers	Hydrology Lab	1,794	2,336	$ 3.49	$	8,152	$ -		$ -		$ -		$ 8,152		$ -		$ -		$ -		$ -		$ -	
1.1	1	0	Fire Sprinklers	Toilet Room Area	248	323	$ 3.21	$	1,035	$ -		$ 1,035		$ -		$ -		$ -		$ -		$ -		$ -		$ -	
1.1	1	0	Fire Sprinklers	Stair Area	250	250	$ 3.21	$	802	$ -		$ 802		$ -		$ -		$ -		$ -		$ -		$ -		$ -	
1.1	1	0	Fire Sprinklers	Lobby Space	2,000	2,604	$ 3.21	$	8,349	$ -		$ 8,349		$ -		$ -		$ -		$ -		$ -		$ -		$ -	
1	1	0	Fire Sprinklers	Bio Tutoring Area - NIC	424	552	$ -	$	-	$ -		$ -		$ -		$ -		$ -		$ -		$ -		$ -		$ -	
2	1	0	Fire Sprinklers	Study Area	812	1,057	$ 3.21	$	3,390	$ -		$ -		$ 3,390		$ -		$ -		$ -		$ -		$ -		$ -	
2	1	0	Fire Sprinklers	Office, Mtg Room & Grad Area	1,801	2,345	$ 3.21	$	7,519	$ -		$ -		$ 7,519		$ -		$ -		$ -		$ -		$ -		$ -	
2	1	0	Fire Sprinklers	Department Administration	2,667	3,472	$ 3.21	$	11,134	$ -		$ -		$ 11,134		$ -		$ -		$ -		$ -		$ -		$ -	
2	1	0	Fire Sprinklers	Research Lab Suite	2,527	3,290	$ 3.77	$	12,417	$ -		$ -		$ 12,417		$ -		$ -		$ -		$ -		$ -		$ -	
2	1	0	Fire Sprinklers	Research Lab Support Area	302	393	$ 3.77	$	1,484	$ -		$ -		$ 1,484		$ -		$ -		$ -		$ -		$ -		$ -	
1.1	2	0	Fire Sprinklers	Toilet Room Area	248	323	$ 3.21	$	1,035	$ -		$ 1,035		$ -		$ -		$ -		$ -		$ -		$ -		$ -	
1.1	2	0	Fire Sprinklers	Stair Area	250	326	$ 3.21	$	1,044	$ -		$ 1,044		$ -		$ -		$ -		$ -		$ -		$ -		$ -	
1	2	0	Fire Sprinklers	Plant / Pest Diagnostic - NIC	897	1,168	$ -	$	-	$ -		$ -		$ -		$ -		$ -		$ -		$ -		$ -		$ -	
1	2	0	Fire Sprinklers	Research Labs - NIC	992	1,292	$ -	$	-	$ -		$ -		$ -		$ -		$ -		$ -		$ -		$ -		$ -	
1	2	0	Fire Sprinklers	Computational Lab - NIC	675	879	$ -	$	-	$ -		$ -		$ -		$ -		$ -		$ -		$ -		$ -		$ -	
1	2	0	Fire Sprinklers	Plant / Pest Office	207	270	$ -	$	-	$ -		$ -		$ -		$ -		$ -		$ -		$ -		$ -		$ -	
2	2	0	Fire Sprinklers	Study Area	430	560	$ 3.21	$	1,795	$ -		$ -		$ 1,795		$ -		$ -		$ -		$ -		$ -		$ -	
2	2	0	Fire Sprinklers	Office & Grad Area	1,681	2,189	$ 3.21	$	7,018	$ -		$ -		$ 7,018		$ -		$ -		$ -		$ -		$ -		$ -	
2	2	0	Fire Sprinklers	Write-Up Area / Small Meeting Room	120	156	$ 3.21	$	501	$ -		$ -		$ 501		$ -		$ -		$ -		$ -		$ -		$ -	
2	2	0	Fire Sprinklers	USU Insect Collection	1,934	1,934	$ 3.77	$	7,299	$ -		$ -		$ 7,299		$ -		$ -		$ -		$ -		$ -		$ -	
2	2	0	Fire Sprinklers	USDA Bee Collection	1,472	1,917	$ 3.77	$	7,233	$ -		$ -		$ 7,233		$ -		$ -		$ -		$ -		$ -		$ -	
2	2	0	Fire Sprinklers	Research Lab Suite	2,543	3,311	$ 3.77	$	12,495	$ -		$ -		$ 12,495		$ -		$ -		$ -		$ -		$ -		$ -	
2	2	0	Fire Sprinklers	Research Lab Support Area	320	417	$ 3.77	$	1,572	$ -		$ -		$ 1,572		$ -		$ -		$ -		$ -		$ -		$ -	
1.1	3	0	Fire Sprinklers	Toilet Room Area	248	323	$ 3.21	$	1,035	$ -		$ 1,035		$ -		$ -		$ -		$ -		$ -		$ -		$ -	
1.1	3	0	Fire Sprinklers	Stair Area	250	326	$ 3.21	$	1,044	$ -		$ 1,044		$ -		$ -		$ -		$ -		$ -		$ -		$ -	
1	3	0	Fire Sprinklers	Research Labs - NIC	3,481	4,532	$ -	$	-	$ -		$ -		$ -		$ -		$ -		$ -		$ -		$ -		$ -	
1	3	0	Fire Sprinklers	Computational Lab - NIC	528	687	$ -	$	-	$ -		$ -		$ -		$ -		$ -		$ -		$ -		$ -		$ -	
2	3	0	Fire Sprinklers	Tutoring Area	314	409	$ 3.21	$	1,311	$ -		$ -		$ 1,311		$ -		$ -		$ -		$ -		$ -		$ -	
2	3	0	Fire Sprinklers	Office & Grad Area	1,558	2,029	$ 3.21	$	6,504	$ -		$ -		$ 6,504		$ -		$ -		$ -		$ -		$ -		$ -	
2	3	0	Fire Sprinklers	Write-Up Area/Small Meeting Room	120	156	$ 3.21	$	501	$ -		$ -		$ 501		$ -		$ -		$ -		$ -		$ -		$ -	
2	3	0	Fire Sprinklers	Study Area	248	323	$ 3.21	$	1,035	$ -		$ -		$ 1,035		$ -		$ -		$ -		$ -		$ -		$ -	
2	3	0	Fire Sprinklers	Cadaver Laboratory	1,146	1,492	$ 3.77	$	5,631	$ -		$ -		$ 5,631		$ -		$ -		$ -		$ -		$ -		$ -	
2	3	0	Fire Sprinklers	Human Anatomy Area	960	1,250	$ 3.77	$	4,717	$ -		$ -		$ 4,717		$ -		$ -		$ -		$ -		$ -		$ -	
2	3	0	Fire Sprinklers	Human Physiology	1,248	1,625	$ 3.77	$	6,132	$ -		$ -		$ 6,132		$ -		$ -		$ -		$ -		$ -		$ -	
2	3	0	Fire Sprinklers	Research Lab Suite	2,534	3,299	$ 3.77	$	12,451	$ -		$ -		$ 12,451		$ -		$ -		$ -		$ -		$ -		$ -	
2	3	0	Fire Sprinklers	Research Lab Support Area	320	417	$ 3.77	$	1,572	$ -		$ -		$ 1,572		$ -		$ -		$ -		$ -		$ -		$ -	
2	R	8	Fire Sprinklers	New North Wing Penthouse	2,000	2,000	$ 3.21	$	6,413	$ -		$ -		$ 6,413		$ -		$ -		$ -		$ -		$ 6,413		$ -	
1	0 thru R	0	Fire Sprinklers	CNR Area required to be demo to receive new seismic treatment of West Wing - NIC	4,800	6,250	$ -	$	-	$ -		$ -		$ -		$ -		$ -		$ -		$ -		$ -		$ -	
4	0	0	Fire Sprinklers	Lab Alcove Areas	118	155	$ 3.77	$	585	$ -		$ -		$ -		$ -		$ 585		$ -		$ -		$ -		$ -	
4	0	0	Fire Sprinklers	Plant / Insect Teaching Labs	1,281	1,684	$ 3.77	$	6,356	$ -		$ -		$ -		$ -		$ 6,356		$ -		$ -		$ -		$ -	
4	0	0	Fire Sprinklers	Support and Specimen Storage Area	536	705	$ 3.77	$	2,659	$ -		$ -		$ -		$ -		$ 2,659		$ -		$ -		$ -		$ -	
4	0	9	Fire Sprinklers	Herbarium	3,731	4,905	$ 3.77	$	18,511	$ -		$ -		$ -		$ -		$ 18,511		$ -		$ -		$ -		$ 3,702	TI Portion Only
4	0	0	Fire Sprinklers	Mechanical Area	8,745	11,497	$ 3.21	$	36,863	$ -		$ -		$ -		$ -		$ 36,863		$ -		$ -		$ -		$ -	
4	0	0	Fire Sprinklers	Toilet Rooms	500	657	$ 3.21	$	2,108	$ -		$ -		$ -		$ -		$ 2,108		$ -		$ -		$ -		$ -	
4	0	0	Fire Sprinklers	Freezer Farm	531	698	$ 3.49	$	2,436	$ -		$ -		$ -		$ -		$ 2,436		$ -		$ -		$ -		$ -	

USU BNR Remodel / New Classroom Lab Building - Parametric Estimate - Scheme 6 (Consensus Solution) Rev 0
Based on preliminary program information by CRSA/Payette dated 12 February 2016
19-Feb-16

					Net to Gross Factors		Cost Factor		Wing / Area										Work Scope Options							
					Factor 1.315	Factor 1.302	Factor 1.135		West Renovate 1	Cost /SF	North-West New 1.1	Cost /SF	North 2	Cost /SF	South 3	Cost /SF	New Bldg 4	Cost /SF	A: Siesmic Upgrade of North Wing of BNR	Cost /SF	B: North Wing of BNR Exterior Closure Option	Cost /SF	C: Upgrade Mechanical in North Wing of BNR - Penthouse & Eqiupment	Cost /SF	D: Shell-out Herbarium Area and Finish Later	Cost /SF
Wing	Floor	Work Scope Option	Scope Description	Area	Net SF	Gross SF	Cost / Unit	Total Cost											6		7		8		9	
4	0	0	Fire Sprinklers	Growth Chambers	393	517	$ 3.49	$ 1,803	$ -		$ -		$ -		$ -		$ 1,803		$ -		$ -		$ -		$ -	
4	0	0	Fire Sprinklers	AutoClave	310	408	$ 3.49	$ 1,422	$ -		$ -		$ -		$ -		$ 1,422		$ -		$ -		$ -		$ -	
4	1	0	Fire Sprinklers	Lobby Space	1,200	1,578	$ 3.21	$ 5,058	$ -		$ -		$ -		$ -		$ 5,058		$ -		$ -		$ -		$ -	
4	1	0	Fire Sprinklers	Open Study Area	250	329	$ 3.21	$ 1,054	$ -		$ -		$ -		$ -		$ 1,054		$ -		$ -		$ -		$ -	
4	1	0	Fire Sprinklers	Toilet Rooms	500	657	$ 3.21	$ 2,108	$ -		$ -		$ -		$ -		$ 2,108		$ -		$ -		$ -		$ -	
4	1	0	Fire Sprinklers	Advising Space	570	749	$ 3.21	$ 2,403	$ -		$ -		$ -		$ -		$ 2,403		$ -		$ -		$ -		$ -	
4	1	0	Fire Sprinklers	Department Administration	934	1,228	$ 3.21	$ 3,937	$ -		$ -		$ -		$ -		$ 3,937		$ -		$ -		$ -		$ -	
4	1	0	Fire Sprinklers	Public Health	1,724	2,266	$ 3.77	$ 8,553	$ -		$ -		$ -		$ -		$ 8,553		$ -		$ -		$ -		$ -	
4	1	0	Fire Sprinklers	CNR GIS Lab	2,510	3,300	$ 3.77	$ 12,453	$ -		$ -		$ -		$ -		$ 12,453		$ -		$ -		$ -		$ -	
4	1	0	Fire Sprinklers	Active Learning Class Room - 115 P	3,130	4,115	$ 3.21	$ 13,194	$ -		$ -		$ -		$ -		$ 13,194		$ -		$ -		$ -		$ -	
4	1	0	Fire Sprinklers	Lecture Hall - 350 P	4,446	5,845	$ 3.21	$ 18,741	$ -		$ -		$ -		$ -		$ 18,741		$ -		$ -		$ -		$ -	
4	1	0	Fire Sprinklers	Study Area	427	561	$ 3.21	$ 1,800	$ -		$ -		$ -		$ -		$ 1,800		$ -		$ -		$ -		$ -	
4	1	0	Fire Sprinklers	Building Support Area	896	1,178	$ 3.21	$ 3,777	$ -		$ -		$ -		$ -		$ 3,777		$ -		$ -		$ -		$ -	
4	2	0	Fire Sprinklers	Offices	960	1,262	$ 3.21	$ 4,047	$ -		$ -		$ -		$ -		$ 4,047		$ -		$ -		$ -		$ -	
4	2	0	Fire Sprinklers	Study Area	582	765	$ 3.21	$ 2,453	$ -		$ -		$ -		$ -		$ 2,453		$ -		$ -		$ -		$ -	
4	2	0	Fire Sprinklers	Graduate Office Space	885	1,163	$ 3.21	$ 3,731	$ -		$ -		$ -		$ -		$ 3,731		$ -		$ -		$ -		$ -	
4	2	0	Fire Sprinklers	Meeting Rooms	252	331	$ 3.21	$ 1,062	$ -		$ -		$ -		$ -		$ 1,062		$ -		$ -		$ -		$ -	
4	2	0	Fire Sprinklers	Toilet Rooms	500	657	$ 3.21	$ 2,108	$ -		$ -		$ -		$ -		$ 2,108		$ -		$ -		$ -		$ -	
4	2	0	Fire Sprinklers	Advanced Physics Teaching Lab	1,575	2,071	$ 3.77	$ 7,814	$ -		$ -		$ -		$ -		$ 7,814		$ -		$ -		$ -		$ -	
4	2	0	Fire Sprinklers	General Biology Teaching Labs	5,032	6,615	$ 3.77	$ 24,966	$ -		$ -		$ -		$ -		$ 24,966		$ -		$ -		$ -		$ -	
4	2	0	Fire Sprinklers	General Biology Prep Area	945	1,242	$ 3.77	$ 4,688	$ -		$ -		$ -		$ -		$ 4,688		$ -		$ -		$ -		$ -	
4	2	0	Fire Sprinklers	Reasearch Lab Suites	5,112	6,721	$ 3.77	$ 25,362	$ -		$ -		$ -		$ -		$ 25,362		$ -		$ -		$ -		$ -	
4	2	0	Fire Sprinklers	Dry Lab	721	948	$ 3.77	$ 3,577	$ -		$ -		$ -		$ -		$ 3,577		$ -		$ -		$ -		$ -	
4	2	0	Fire Sprinklers	Lab Alcove Areas	416	547	$ 3.77	$ 2,064	$ -		$ -		$ -		$ -		$ 2,064		$ -		$ -		$ -		$ -	
4	2	0	Fire Sprinklers	Lab Support Area	629	827	$ 3.77	$ 3,121	$ -		$ -		$ -		$ -		$ 3,121		$ -		$ -		$ -		$ -	
4	2	0	Fire Sprinklers	Cold Room	105	138	$ 3.77	$ 521	$ -		$ -		$ -		$ -		$ 521		$ -		$ -		$ -		$ -	
4	3	0	Fire Sprinklers	Offices	960	1,262	$ 3.21	$ 4,047	$ -		$ -		$ -		$ -		$ 4,047		$ -		$ -		$ -		$ -	
4	3	0	Fire Sprinklers	Study Area	1,456	1,914	$ 3.21	$ 6,137	$ -		$ -		$ -		$ -		$ 6,137		$ -		$ -		$ -		$ -	
4	3	0	Fire Sprinklers	Toilet Rooms	500	657	$ 3.21	$ 2,108	$ -		$ -		$ -		$ -		$ 2,108		$ -		$ -		$ -		$ -	
4	3	0	Fire Sprinklers	Ecology Teaching Lab	1,575	2,071	$ 3.77	$ 7,814	$ -		$ -		$ -		$ -		$ 7,814		$ -		$ -		$ -		$ -	
4	3	0	Fire Sprinklers	Lab Support Area	315	414	$ 3.77	$ 1,563	$ -		$ -		$ -		$ -		$ 1,563		$ -		$ -		$ -		$ -	
4	3	0	Fire Sprinklers	Cell / Mol Bio / Genetics Lab	1,260	1,656	$ 3.77	$ 6,251	$ -		$ -		$ -		$ -		$ 6,251		$ -		$ -		$ -		$ -	
4	3	0	Fire Sprinklers	Micro Bio Teaching Lab	1,263	1,660	$ 3.77	$ 6,266	$ -		$ -		$ -		$ -		$ 6,266		$ -		$ -		$ -		$ -	
4	3	0	Fire Sprinklers	Micro Bio Prep Area	630	828	$ 3.77	$ 3,126	$ -		$ -		$ -		$ -		$ 3,126		$ -		$ -		$ -		$ -	
4	3	0	Fire Sprinklers	Micro Bio Media Prep Area	630	828	$ 3.77	$ 3,126	$ -		$ -		$ -		$ -		$ 3,126		$ -		$ -		$ -		$ -	
4	3	0	Fire Sprinklers	Micro Bio Teaching Lab	1,240	1,630	$ 3.77	$ 6,152	$ -		$ -		$ -		$ -		$ 6,152		$ -		$ -		$ -		$ -	
4	3	0	Fire Sprinklers	Research Lab Suites	4,402	5,787	$ 3.77	$ 21,840	$ -		$ -		$ -		$ -		$ 21,840		$ -		$ -		$ -		$ -	
4	3	0	Fire Sprinklers	Dry Lab	811	1,066	$ 3.77	$ 4,024	$ -		$ -		$ -		$ -		$ 4,024		$ -		$ -		$ -		$ -	
4	3	0	Fire Sprinklers	BSL-2	629	827	$ 3.77	$ 3,121	$ -		$ -		$ -		$ -		$ 3,121		$ -		$ -		$ -		$ -	
4	3	0	Fire Sprinklers	Lab Support Area	368	484	$ 3.77	$ 1,826	$ -		$ -		$ -		$ -		$ 1,826		$ -		$ -		$ -		$ -	
4	3	0	Fire Sprinklers	Cold Rooms	210	276	$ 3.77	$ 1,042	$ -		$ -		$ -		$ -		$ 1,042		$ -		$ -		$ -		$ -	
4	3	0	Fire Sprinklers	Lab Alcove Areas	420	552	$ 3.77	$ 2,084	$ -		$ -		$ -		$ -		$ 2,084		$ -		$ -		$ -		$ -	
4	3	0	Fire Sprinklers	Graduate Office Space	1,034	1,359	$ 3.21	$ 4,359	$ -		$ -		$ -		$ -		$ 4,359		$ -		$ -		$ -		$ -	
4	3	0	Fire Sprinklers	Meeting Rooms	252	331	$ 3.21	$ 1,062	$ -		$ -		$ -		$ -		$ 1,062		$ -		$ -		$ -		$ -	
4	3	0	Fire Sprinklers	Building Support Area	126	166	$ 3.21	$ 531	$ -		$ -		$ -		$ -		$ 531		$ -		$ -		$ -		$ -	
4	R	0	Fire Sprinklers	Penthouse	12,210	12,210	$ 3.21	$ 39,150	$ -		$ -		$ -		$ -		$ 39,150		$ -		$ -		$ -		$ -	
4	0	0	Fire Sprinklers		-	-	$ 3.21	$ -	$ -		$ -		$ -		$ -		$ -		$ -		$ -		$ -		$ -	
4	4	0	Fire Sprinklers		-	-	$ 3.21	$ -	$ -		$ -		$ -		$ -		$ -		$ -		$ -		$ -		$ -	
			Total Fire Sprinklers					**$ 541,690**	**$ -**	**$ -**	**$ 18,511**	**$ 3.61**	**$ 158,064**	**$ 3.52**	**$ 8,152**	**$ 3.49**	**$ 356,962**	**$ 3.49**	**$ -**	**$ -**	**$ -**	**$ -**	**$ 6,413**	**$ 0.14**	**$ 3,702**	**$ 0.75**
			Electrical																							
2	0	0	Electrical	Field Equipment Area	490	638	$ 26.16	$ 16,687	$ -		$ -		$ 16,687		$ -		$ -		$ -		$ -		$ -		$ -	
2	0	0	Electrical	Biology Department Administration Area	242	315	$ 26.16	$ 8,241	$ -		$ -		$ 8,241		$ -		$ -		$ -		$ -		$ -		$ -	
2	0	0	Electrical	Growth Chambers	237	309	$ 32.35	$ 9,982	$ -		$ -		$ 9,982		$ -		$ -		$ -		$ -		$ -		$ -	
2	0	0	Electrical	Freezer	300	391	$ 32.35	$ 12,635	$ -		$ -		$ 12,635		$ -		$ -		$ -		$ -		$ -		$ -	
2	0	0	Electrical	AutoClave	316	411	$ 32.35	$ 13,309	$ -		$ -		$ 13,309		$ -		$ -		$ -		$ -		$ -		$ -	
2	0	0	Electrical	Gen Equipment Storage Area	335	436	$ 26.16	$ 11,408	$ -		$ -		$ 11,408		$ -		$ -		$ -		$ -		$ -		$ -	
2	0	0	Electrical	Building Support Area	117	152	$ 26.16	$ 3,984	$ -		$ -		$ 3,984		$ -		$ -		$ -		$ -		$ -		$ -	
2	0	0	Electrical	Animal Holding	1,503	1,957	$ 43.13	$ 84,401	$ -		$ -		$ 84,401		$ -		$ -		$ -		$ -		$ -		$ -	
2	0	0	Electrical	New Mechanical Area	910	1,185	$ 26.16	$ 30,990	$ -		$ -		$ 30,990		$ -		$ -		$ -		$ -		$ -		$ -	
2	0	0	Electrical	Existing Mechanical Area	1,392	1,812	$ 26.16	$ 47,405	$ -		$ -		$ 47,405		$ -		$ -		$ -		$ -		$ -		$ -	
2	0	0	Electrical	Vertebrate Collection	1,024	1,333	$ 43.13	$ 57,503	$ -		$ -		$ 57,503		$ -		$ -		$ -		$ -		$ -		$ -	
2	0	0	Electrical	Vertebrate Teaching Lab	1,444	1,880	$ 43.13	$ 81,088	$ -		$ -		$ 81,088		$ -		$ -		$ -		$ -		$ -		$ -	
1.1	0	0	Electrical	Toilet Room Area	248	323	$ 26.16	$ 8,446	$ -		$ 8,446		$ -		$ -		$ -		$ -		$ -		$ -		$ -	
1.1	0	0	Electrical	Stair Area	250	326	$ 26.16	$ 8,514	$ -		$ 8,514		$ -		$ -		$ -		$ -		$ -		$ -		$ -	
1.1	0	0	Electrical	Areaway for Transformers	500	651	$ 26.16	$ 17,028	$ -		$ 17,028		$ -		$ -		$ -		$ -		$ -		$ -		$ -	
3	0	0	Electrical	Hydrology Lab	1,794	2,336	$ 32.35	$ 75,557	$ -		$ -		$ -		$ 75,557		$ -		$ -		$ -		$ -		$ -	
1.1	1	0	Electrical	Toilet Room Area	248	323	$ 26.16	$ 8,446	$ -		$ 8,446		$ -		$ -		$ -		$ -		$ -		$ -		$ -	
1.1	1	0	Electrical	Stair Area	250	250	$ 26.16	$ 6,539	$ -		$ 6,539		$ -		$ -		$ -		$ -		$ -		$ -		$ -	
1.1	1	0	Electrical	Lobby Space	2,000	2,604	$ 26.16	$ 68,110	$ -		$ 68,110		$ -		$ -		$ -		$ -		$ -		$ -		$ -	
1	1	0	Electrical	Bio Tutoring Area - NIC	424	552	$ -	$ -	$ -		$ -		$ -		$ -		$ -		$ -		$ -		$ -		$ -	
2	1	0	Electrical	Study Area	812	1,057	$ 26.16	$ 27,653	$ -		$ -		$ 27,653		$ -		$ -		$ -		$ -		$ -		$ -	
2	1	0	Electrical	Office, Mtg Room & Grad Area	1,801	2,345	$ 26.16	$ 61,333	$ -		$ -		$ 61,333		$ -		$ -		$ -		$ -		$ -		$ -	
2	1	0	Electrical	Department Administration	2,667	3,472	$ 26.16	$ 90,825	$ -		$ -		$ 90,825		$ -		$ -		$ -		$ -		$ -		$ -	
2	1	0	Electrical	Research Lab Suite	2,527	3,290	$ 43.13	$ 141,904	$ -		$ -		$ 141,904		$ -		$ -		$ -		$ -		$ -		$ -	
2	1	0	Electrical	Research Lab Support Area	302	393	$ 43.13	$ 16,959	$ -		$ -		$ 16,959		$ -		$ -		$ -		$ -		$ -		$ -	
1.1	2	0	Electrical	Toilet Room Area	248	323	$ 26.16	$ 8,446	$ -		$ 8,446		$ -		$ -		$ -		$ -		$ -		$ -		$ -	
1.1	2	0	Electrical	Stair Area	250	326	$ 26.16	$ 8,514	$ -		$ 8,514		$ -		$ -		$ -		$ -		$ -		$ -		$ -	
1	2	0	Electrical	Plant / Pest Diagnostic - NIC	897	1,168	$ -	$ -	$ -		$ -		$ -		$ -		$ -		$ -		$ -		$ -		$ -	
1	2	0	Electrical	Research Labs - NIC	992	1,292	$ -	$ -	$ -		$ -		$ -		$ -		$ -		$ -		$ -		$ -		$ -	
1	2	0	Electrical	Computational Lab - NIC	675	879	$ -	$ -	$ -		$ -		$ -		$ -		$ -		$ -		$ -		$ -		$ -	
1	2	0	Electrical	Plant / Pest Office - NIC	207	270	$ -	$ -	$ -		$ -		$ -		$ -		$ -		$ -		$ -		$ -		$ -	

USU BNR Remodel / New Classroom Lab Building - Parametric Estimate - Scheme 6 (Consensus Solution) Rev 0
Based on preliminary program information by CRSA/Payette dated 12 February 2016
19-Feb-16

JACOBSEN Advisory Services

					Net to Gross Factors		Cost Factor		Wing / Area										Work Scope Options							
					Factor 1.315	Factor 1.302	Factor 1.135																			
Wing	Floor	Work Scope Option	Scope Description	Area	Net SF	Gross SF	Cost / Unit	Total Cost	West Renovate 1	Cost /SF	North-West New 1.1	Cost /SF	North 2	Cost /SF	South 3	Cost /SF	New Bldg 4	Cost /SF	A: Siesmic Upgrade of North Wing of BNR	Cost /SF	B: North Wing of BNR Exterior Closure Option	Cost /SF	C: Upgrade Mechanical in North Wing of BNR - Penthouse & Eqiupment	Cost /SF	D: Shell-out Herbarium Area and Finish Later	Cost /SF
																			6		7		8		9	
2	2	0	Electrical	Study Area	430	560	$ 26.16	$ 14,644	$ -		$ -		$ 14,644		$ -		$ -		$ -		$ -		$ -		$ -	
2	2	0	Electrical	Office & Grad Area	1,681	2,189	$ 26.16	$ 57,247	$ -		$ -		$ 57,247		$ -		$ -		$ -		$ -		$ -		$ -	
2	2	0	Electrical	Write-Up Area / Small Meeting Room	120	156	$ 26.16	$ 4,087	$ -		$ -		$ 4,087		$ -		$ -		$ -		$ -		$ -		$ -	
2	2	0	Electrical	USU Insect Collection	1,934	1,934	$ 43.13	$ 83,413	$ -		$ -		$ 83,413		$ -		$ -		$ -		$ -		$ -		$ -	
2	2	0	Electrical	USDA Bee Collection	1,472	1,917	$ 43.13	$ 82,661	$ -		$ -		$ 82,661		$ -		$ -		$ -		$ -		$ -		$ -	
2	2	0	Electrical	Research Lab Suite	2,543	3,311	$ 43.13	$ 142,803	$ -		$ -		$ 142,803		$ -		$ -		$ -		$ -		$ -		$ -	
2	2	0	Electrical	Research Lab Support Area	320	417	$ 43.13	$ 17,970	$ -		$ -		$ 17,970		$ -		$ -		$ -		$ -		$ -		$ -	
1.1	3	0	Electrical	Toilet Room Area	248	323	$ 26.16	$ 8,446	$ -		$ 8,446		$ -		$ -		$ -		$ -		$ -		$ -		$ -	
1.1	3	0	Electrical	Stair Area	250	326	$ 26.16	$ 8,514	$ -		$ 8,514		$ -		$ -		$ -		$ -		$ -		$ -		$ -	
1	3	0	Electrical	Research Labs - NIC	3,481	4,532	$ -	$ -	$ -		$ -		$ -		$ -		$ -		$ -		$ -		$ -		$ -	
1	3	0	Electrical	Computational Lab - NIC	528	687	$ -	$ -	$ -		$ -		$ -		$ -		$ -		$ -		$ -		$ -		$ -	
2	3	0	Electrical	Tutoring Area	314	409	$ 26.16	$ 10,693	$ -		$ -		$ 10,693		$ -		$ -		$ -		$ -		$ -		$ -	
2	3	0	Electrical	Office & Grad Area	1,558	2,029	$ 26.16	$ 53,058	$ -		$ -		$ 53,058		$ -		$ -		$ -		$ -		$ -		$ -	
2	3	0	Electrical	Write-Up Area/Small Meeting Room	120	156	$ 26.16	$ 4,087	$ -		$ -		$ 4,087		$ -		$ -		$ -		$ -		$ -		$ -	
2	3	0	Electrical	Study Area	248	323	$ 26.16	$ 8,446	$ -		$ -		$ 8,446		$ -		$ -		$ -		$ -		$ -		$ -	
2	3	0	Electrical	Cadaver Laboratory	1,146	1,492	$ 43.13	$ 64,354	$ -		$ -		$ 64,354		$ -		$ -		$ -		$ -		$ -		$ -	
2	3	0	Electrical	Human Anatomy Area	960	1,250	$ 43.13	$ 53,909	$ -		$ -		$ 53,909		$ -		$ -		$ -		$ -		$ -		$ -	
2	3	0	Electrical	Human Physiology	1,248	1,625	$ 43.13	$ 70,082	$ -		$ -		$ 70,082		$ -		$ -		$ -		$ -		$ -		$ -	
2	3	0	Electrical	Research Lab Suite	2,534	3,299	$ 43.13	$ 142,297	$ -		$ -		$ 142,297		$ -		$ -		$ -		$ -		$ -		$ -	
2	3	0	Electrical	Research Lab Support Area	320	417	$ 43.13	$ 17,970	$ -		$ -		$ 17,970		$ -		$ -		$ -		$ -		$ -		$ -	
2	R	8	Electrical	New North Wing Penthouse	2,000	2,000	$ 26.16	$ 52,312	$ -		$ -		$ 52,312		$ -		$ -		$ -		$ -		$ 52,312		$ -	
1	0 thru R	0	Electrical	CNR Area required to be demo to receive new seismic treatment of West Wing - NIC	4,800	6,250	$ -	$ -	$ -		$ -		$ -		$ -		$ -		$ -		$ -		$ -		$ -	
4	0	0	Electrical	Lab Alcove Areas	118	155	$ 43.13	$ 6,691	$ -		$ -		$ -		$ -		$ 6,691		$ -		$ -		$ -		$ -	
4	0	0	Electrical	Plant / Insect Teaching Labs	1,281	1,684	$ 43.13	$ 72,634	$ -		$ -		$ -		$ -		$ 72,634		$ -		$ -		$ -		$ -	
4	0	0	Electrical	Support and Specimen Storage Area	536	705	$ 43.13	$ 30,392	$ -		$ -		$ -		$ -		$ 30,392		$ -		$ -		$ -		$ -	
4	0	9	Electrical	Herbarium	3,731	4,905	$ 43.13	$ 211,552	$ -		$ -		$ -		$ -		$ 211,552		$ -		$ -		$ -		$ 126,931	TI Portion Only
4	0	0	Electrical	Mechanical Area	8,745	11,497	$ 26.16	$ 300,709	$ -		$ -		$ -		$ -		$ 300,709		$ -		$ -		$ -		$ -	
4	0	0	Electrical	Toilet Rooms	500	657	$ 26.16	$ 17,193	$ -		$ -		$ -		$ -		$ 17,193		$ -		$ -		$ -		$ -	
4	0	0	Electrical	Freezer Farm	531	698	$ 32.35	$ 22,581	$ -		$ -		$ -		$ -		$ 22,581		$ -		$ -		$ -		$ -	
4	0	0	Electrical	Growth Chambers	393	517	$ 32.35	$ 16,713	$ -		$ -		$ -		$ -		$ 16,713		$ -		$ -		$ -		$ -	
4	0	0	Electrical	AutoClave	310	408	$ 32.35	$ 13,183	$ -		$ -		$ -		$ -		$ 13,183		$ -		$ -		$ -		$ -	
4	1	0	Electrical	Lobby Space	1,200	1,578	$ 26.16	$ 41,264	$ -		$ -		$ -		$ -		$ 41,264		$ -		$ -		$ -		$ -	
4	1	0	Electrical	Open Study Area	250	329	$ 26.16	$ 8,597	$ -		$ -		$ -		$ -		$ 8,597		$ -		$ -		$ -		$ -	
4	1	0	Electrical	Toilet Rooms	500	657	$ 26.16	$ 17,193	$ -		$ -		$ -		$ -		$ 17,193		$ -		$ -		$ -		$ -	
4	1	0	Electrical	Advising Space	570	749	$ 26.16	$ 19,600	$ -		$ -		$ -		$ -		$ 19,600		$ -		$ -		$ -		$ -	
4	1	0	Electrical	Department Administration	934	1,228	$ 26.16	$ 32,117	$ -		$ -		$ -		$ -		$ 32,117		$ -		$ -		$ -		$ -	
4	1	0	Electrical	Public Health	1,724	2,266	$ 43.13	$ 97,753	$ -		$ -		$ -		$ -		$ 97,753		$ -		$ -		$ -		$ -	
4	1	0	Electrical	CNR GIS Lab	2,510	3,300	$ 43.13	$ 142,320	$ -		$ -		$ -		$ -		$ 142,320		$ -		$ -		$ -		$ -	
4	1	0	Electrical	Active Learning Class Room - 115 P	3,130	4,115	$ 26.16	$ 107,629	$ -		$ -		$ -		$ -		$ 107,629		$ -		$ -		$ -		$ -	
4	1	0	Electrical	Lecture Hall - 350 P	4,446	5,845	$ 26.16	$ 152,882	$ -		$ -		$ -		$ -		$ 152,882		$ -		$ -		$ -		$ -	
4	1	0	Electrical	Study Area	427	561	$ 26.16	$ 14,683	$ -		$ -		$ -		$ -		$ 14,683		$ -		$ -		$ -		$ -	
4	1	0	Electrical	Building Support Area	896	1,178	$ 26.16	$ 30,810	$ -		$ -		$ -		$ -		$ 30,810		$ -		$ -		$ -		$ -	
4	2	0	Electrical	Offices	960	1,262	$ 26.16	$ 33,011	$ -		$ -		$ -		$ -		$ 33,011		$ -		$ -		$ -		$ -	
4	2	0	Electrical	Study Area	582	765	$ 26.16	$ 20,013	$ -		$ -		$ -		$ -		$ 20,013		$ -		$ -		$ -		$ -	
4	2	0	Electrical	Graduate Office Space	885	1,163	$ 26.16	$ 30,432	$ -		$ -		$ -		$ -		$ 30,432		$ -		$ -		$ -		$ -	
4	2	0	Electrical	Meeting Rooms	252	331	$ 26.16	$ 8,665	$ -		$ -		$ -		$ -		$ 8,665		$ -		$ -		$ -		$ -	
4	2	0	Electrical	Toilet Rooms	500	657	$ 26.16	$ 17,193	$ -		$ -		$ -		$ -		$ 17,193		$ -		$ -		$ -		$ -	
4	2	0	Electrical	Advanced Physics Teaching Lab	1,575	2,071	$ 43.13	$ 89,305	$ -		$ -		$ -		$ -		$ 89,305		$ -		$ -		$ -		$ -	
4	2	0	Electrical	General Biology Teaching Labs	5,032	6,615	$ 43.13	$ 285,321	$ -		$ -		$ -		$ -		$ 285,321		$ -		$ -		$ -		$ -	
4	2	0	Electrical	General Biology Prep Area	945	1,242	$ 43.13	$ 53,583	$ -		$ -		$ -		$ -		$ 53,583		$ -		$ -		$ -		$ -	
4	2	0	Electrical	Reasearch Lab Suites	5,112	6,721	$ 43.13	$ 289,857	$ -		$ -		$ -		$ -		$ 289,857		$ -		$ -		$ -		$ -	
4	2	0	Electrical	Dry Lab	721	948	$ 43.13	$ 40,882	$ -		$ -		$ -		$ -		$ 40,882		$ -		$ -		$ -		$ -	
4	2	0	Electrical	Lab Alcove Areas	416	547	$ 43.13	$ 23,588	$ -		$ -		$ -		$ -		$ 23,588		$ -		$ -		$ -		$ -	
4	2	0	Electrical	Lab Support Area	629	827	$ 43.13	$ 35,665	$ -		$ -		$ -		$ -		$ 35,665		$ -		$ -		$ -		$ -	
4	2	0	Electrical	Cold Room	105	138	$ 43.13	$ 5,954	$ -		$ -		$ -		$ -		$ 5,954		$ -		$ -		$ -		$ -	
4	3	0	Electrical	Offices	960	1,262	$ 26.16	$ 33,011	$ -		$ -		$ -		$ -		$ 33,011		$ -		$ -		$ -		$ -	
4	3	0	Electrical	Study Area	1,456	1,914	$ 26.16	$ 50,067	$ -		$ -		$ -		$ -		$ 50,067		$ -		$ -		$ -		$ -	
4	3	0	Electrical	Toilet Rooms	500	657	$ 26.16	$ 17,193	$ -		$ -		$ -		$ -		$ 17,193		$ -		$ -		$ -		$ -	
4	3	0	Electrical	Ecology Teaching Lab	1,575	2,071	$ 43.13	$ 89,305	$ -		$ -		$ -		$ -		$ 89,305		$ -		$ -		$ -		$ -	
4	3	0	Electrical	Lab Support Area	315	414	$ 43.13	$ 17,861	$ -		$ -		$ -		$ -		$ 17,861		$ -		$ -		$ -		$ -	
4	3	0	Electrical	Cell / Mol Bio / Genetics Lab	1,260	1,656	$ 43.13	$ 71,444	$ -		$ -		$ -		$ -		$ 71,444		$ -		$ -		$ -		$ -	
4	3	0	Electrical	Micro Bio Teaching Lab	1,263	1,660	$ 43.13	$ 71,614	$ -		$ -		$ -		$ -		$ 71,614		$ -		$ -		$ -		$ -	
4	3	0	Electrical	Micro Bio Prep Area	630	828	$ 43.13	$ 35,722	$ -		$ -		$ -		$ -		$ 35,722		$ -		$ -		$ -		$ -	
4	3	0	Electrical	Micro Bio Media Prep Area	630	828	$ 43.13	$ 35,722	$ -		$ -		$ -		$ -		$ 35,722		$ -		$ -		$ -		$ -	
4	3	0	Electrical	Micro Bio Teaching Lab	1,240	1,630	$ 43.13	$ 70,310	$ -		$ -		$ -		$ -		$ 70,310		$ -		$ -		$ -		$ -	
4	3	0	Electrical	Research Lab Suites	4,402	5,787	$ 43.13	$ 249,599	$ -		$ -		$ -		$ -		$ 249,599		$ -		$ -		$ -		$ -	
4	3	0	Electrical	Dry Lab	811	1,066	$ 43.13	$ 45,985	$ -		$ -		$ -		$ -		$ 45,985		$ -		$ -		$ -		$ -	
4	3	0	Electrical	BSL-2	629	827	$ 43.13	$ 35,665	$ -		$ -		$ -		$ -		$ 35,665		$ -		$ -		$ -		$ -	
4	3	0	Electrical	Lab Support Area	368	484	$ 43.13	$ 20,866	$ -		$ -		$ -		$ -		$ 20,866		$ -		$ -		$ -		$ -	
4	3	0	Electrical	Cold Rooms	210	276	$ 43.13	$ 11,907	$ -		$ -		$ -		$ -		$ 11,907		$ -		$ -		$ -		$ -	
4	3	0	Electrical	Lab Alcove Areas	420	552	$ 43.13	$ 23,815	$ -		$ -		$ -		$ -		$ 23,815		$ -		$ -		$ -		$ -	
4	3	0	Electrical	Graduate Office Space	1,034	1,359	$ 26.16	$ 35,555	$ -		$ -		$ -		$ -		$ 35,555		$ -		$ -		$ -		$ -	
4	3	0	Electrical	Meeting Rooms	252	331	$ 26.16	$ 8,665	$ -		$ -		$ -		$ -		$ 8,665		$ -		$ -		$ -		$ -	
4	3	0	Electrical	Building Support Area	126	166	$ 26.16	$ 4,333	$ -		$ -		$ -		$ -		$ 4,333		$ -		$ -		$ -		$ -	
4	R	0	Electrical	Penthouse	12,210	12,210	$ 20.48	$ 250,074	$ -		$ -		$ -		$ -		$ 250,074		$ -		$ -		$ -		$ -	
4	0	0	Electrical			-	$ 26.16	$ -	$ -		$ -		$ -		$ -		$ -		$ -		$ -		$ -		$ -	
4	0	0	Electrical			-	$ 26.16	$ -	$ -		$ -		$ -		$ -		$ -		$ -		$ -		$ -		$ -	

CRSA PAYETTE

USU BNR Remodel / New Classroom Lab Building - Parametric Estimate - Scheme 6 (Consensus Solution) Rev 0
Based on preliminary program information by CRSA/Payette dated 12 February 2016
19-Feb-16

JACOBSEN Advisory Services

Wing	Floor	Work Scope Option	Scope Description	Area	Net SF (Factor 1.315)	Gross SF (Factor 1.302)	Cost / Unit (Factor 1.135)	Total Cost	West Renovate 1	Cost /SF	North-West New 1.1	Cost /SF	North 2	Cost /SF	South 3	Cost /SF	New Bldg 4	Cost /SF	A: Siesmic Upgrade of North Wing of BNR 6	Cost /SF	B: North Wing of BNR Exterior Closure Option 7	Cost /SF	C: Upgrade Mechanical in North Wing of BNR - Penthouse & Equipment 8	Cost /SF	D: Shell-out Herbarium Area and Finish Later 9	Cost /SF	
									Wing / Area										Work Scope Options								
4	0	0	Electrical			-	$ 26.16	$ -	$ -		$ -		$ -		$ -		$ -		$ -		$ -		$ -		$ -		
			Total Electrical					**$ 5,291,573**	**$ -**	**$ -**	**$ 151,001**	**$ 29.48**	**$ 1,596,340**	**$ 35.59**	**$ 75,557**	**$ 32.35**	**$ 3,468,674**	**$ 33.91**	**$ -**	**$ -**	**$ -**	**$ -**	**$ 52,312**	**$ 1.17**	**$ 126,931**	**$ 25.88**	
			Special Systems																								
2	0	0	Special Systems	Field Equipment Area	490	638	$ -	$ -	$ -		$ -		$ -		$ -		$ -		$ -		$ -		$ -		$ -		
2	0	0	Special Systems	Biology Department Administration Area	242	315	$ -	$ -	$ -		$ -		$ -		$ -		$ -		$ -		$ -		$ -		$ -		
2	0	0	Special Systems	Growth Chambers	237	309	$ 28.38	$ 8,756	$ -		$ -		$ 8,756		$ -		$ -		$ -		$ -		$ -		$ -		
2	0	0	Special Systems	Freezer	300	391	$ 28.38	$ 11,083	$ -		$ -		$ 11,083		$ -		$ -		$ -		$ -		$ -		$ -		
2	0	0	Special Systems	AutoClave	316	411	$ 28.38	$ 11,674	$ -		$ -		$ 11,674		$ -		$ -		$ -		$ -		$ -		$ -		
2	0	0	Special Systems	Gen Equipment Storage Area	335	436	$ -	$ -	$ -		$ -		$ -		$ -		$ -		$ -		$ -		$ -		$ -		
2	0	0	Special Systems	Building Support Area	117	152	$ -	$ -	$ -		$ -		$ -		$ -		$ -		$ -		$ -		$ -		$ -		
2	0	0	Special Systems	Animal Holding	1,503	1,957	$ 34.05	$ 66,633	$ -		$ -		$ 66,633		$ -		$ -		$ -		$ -		$ -		$ -		
2	0	0	Special Systems	New Mechanical Area	910	1,185	$ -	$ -	$ -		$ -		$ -		$ -		$ -		$ -		$ -		$ -		$ -		
2	0	0	Special Systems	Existing Mechanical Area	1,392	1,812	$ -	$ -	$ -		$ -		$ -		$ -		$ -		$ -		$ -		$ -		$ -		
2	0	0	Special Systems	Vertebrate Collection	1,024	1,333	$ 34.05	$ 45,397	$ -		$ -		$ 45,397		$ -		$ -		$ -		$ -		$ -		$ -		
2	0	0	Special Systems	Vertebrate Teaching Lab	1,444	1,880	$ 34.05	$ 64,017	$ -		$ -		$ 64,017		$ -		$ -		$ -		$ -		$ -		$ -		
1.1	0	0	Special Systems	Toilet Room Area	248	323	$ -	$ -	$ -		$ -		$ -		$ -		$ -		$ -		$ -		$ -		$ -		
1.1	0	0	Special Systems	Stair Area	250	326	$ -	$ -	$ -		$ -		$ -		$ -		$ -		$ -		$ -		$ -		$ -		
1.1	0	0	Special Systems	Areaway for Transformers	500	651	$ -	$ -	$ -		$ -		$ -		$ -		$ -		$ -		$ -		$ -		$ -		
3	0	0	Special Systems	Hydrology Lab	1,794	2,336	$ 28.38	$ 66,278	$ -		$ -		$ -		$ 66,278		$ -		$ -		$ -		$ -		$ -		
1.1	1	0	Special Systems	Toilet Room Area	248	323	$ -	$ -	$ -		$ -		$ -		$ -		$ -		$ -		$ -		$ -		$ -		
1.1	1	0	Special Systems	Stair Area	250	250	$ -	$ -	$ -		$ -		$ -		$ -		$ -		$ -		$ -		$ -		$ -		
1.1	1	0	Special Systems	Lobby Space	2,000	2,604	$ -	$ -	$ -		$ -		$ -		$ -		$ -		$ -		$ -		$ -		$ -		
1	1	0	Special Systems	Bio Tutoring Area - NIC	424	552	$ -	$ -	$ -		$ -		$ -		$ -		$ -		$ -		$ -		$ -		$ -		
2	1	0	Special Systems	Study Area	812	1,057	$ -	$ -	$ -		$ -		$ -		$ -		$ -		$ -		$ -		$ -		$ -		
2	1	0	Special Systems	Office, Mtg Room & Grad Area	1,801	2,345	$ -	$ -	$ -		$ -		$ -		$ -		$ -		$ -		$ -		$ -		$ -		
2	1	0	Special Systems	Department Administration	2,667	3,472	$ -	$ -	$ -		$ -		$ -		$ -		$ -		$ -		$ -		$ -		$ -		
2	1	0	Special Systems	Research Lab Suite	2,527	3,290	$ 34.05	$ 112,030	$ -		$ -		$ 112,030		$ -		$ -		$ -		$ -		$ -		$ -		
2	1	0	Special Systems	Research Lab Support Area	302	393	$ 34.05	$ 13,389	$ -		$ -		$ 13,389		$ -		$ -		$ -		$ -		$ -		$ -		
1.1	2	0	Special Systems	Toilet Room Area	248	323	$ -	$ -	$ -		$ -		$ -		$ -		$ -		$ -		$ -		$ -		$ -		
1.1	2	0	Special Systems	Stair Area	250	326	$ -	$ -	$ -		$ -		$ -		$ -		$ -		$ -		$ -		$ -		$ -		
1	2	0	Special Systems	Plant / Pest Diagnostic - NIC	897	1,168	$ -	$ -	$ -		$ -		$ -		$ -		$ -		$ -		$ -		$ -		$ -		
1	2	0	Special Systems	Research Labs - NIC	992	1,292	$ -	$ -	$ -		$ -		$ -		$ -		$ -		$ -		$ -		$ -		$ -		
1	2	0	Special Systems	Computational Lab - NIC	675	879	$ -	$ -	$ -		$ -		$ -		$ -		$ -		$ -		$ -		$ -		$ -		
1	2	0	Special Systems	Plant / Pest Office	207	270	$ -	$ -	$ -		$ -		$ -		$ -		$ -		$ -		$ -		$ -		$ -		
2	2	0	Special Systems	Study Area	430	560	$ -	$ -	$ -		$ -		$ -		$ -		$ -		$ -		$ -		$ -		$ -		
2	2	0	Special Systems	Office & Grad Area	1,681	2,189	$ -	$ -	$ -		$ -		$ -		$ -		$ -		$ -		$ -		$ -		$ -		
2	2	0	Special Systems	Write-Up Area / Small Meeting Room	120	156	$ -	$ -	$ -		$ -		$ -		$ -		$ -		$ -		$ -		$ -		$ -		
2	2	0	Special Systems	USU Insect Collection	1,934	1,934	$ 39.73	$ 76,828	$ -		$ -		$ 76,828		$ -		$ -		$ -		$ -		$ -		$ -		
2	2	0	Special Systems	USDA Bee Collection	1,472	1,917	$ 39.73	$ 76,135	$ -		$ -		$ 76,135		$ -		$ -		$ -		$ -		$ -		$ -		
2	2	0	Special Systems	Research Lab Suite	2,543	3,311	$ 39.73	$ 131,529	$ -		$ -		$ 131,529		$ -		$ -		$ -		$ -		$ -		$ -		
2	2	0	Special Systems	Research Lab Support Area	320	417	$ 39.73	$ 16,551	$ -		$ -		$ 16,551		$ -		$ -		$ -		$ -		$ -		$ -		
1.1	3	0	Special Systems	Toilet Room Area	248	323	$ -	$ -	$ -		$ -		$ -		$ -		$ -		$ -		$ -		$ -		$ -		
1.1	3	0	Special Systems	Stair Area	250	326	$ -	$ -	$ -		$ -		$ -		$ -		$ -		$ -		$ -		$ -		$ -		
1	3	0	Special Systems	Research Labs - NIC	3,481	4,532	$ -	$ -	$ -		$ -		$ -		$ -		$ -		$ -		$ -		$ -		$ -		
1	3	0	Special Systems	Computational Lab - NIC	528	687	$ -	$ -	$ -		$ -		$ -		$ -		$ -		$ -		$ -		$ -		$ -		
2	3	0	Special Systems	Tutoring Area	314	409	$ -	$ -	$ -		$ -		$ -		$ -		$ -		$ -		$ -		$ -		$ -		
2	3	0	Special Systems	Office & Grad Area	1,558	2,029	$ -	$ -	$ -		$ -		$ -		$ -		$ -		$ -		$ -		$ -		$ -		
2	3	0	Special Systems	Write-Up Area/Small Meeting Room	120	156	$ -	$ -	$ -		$ -		$ -		$ -		$ -		$ -		$ -		$ -		$ -		
2	3	0	Special Systems	Study Area	248	323	$ -	$ -	$ -		$ -		$ -		$ -		$ -		$ -		$ -		$ -		$ -		
2	3	0	Special Systems	Cadaver Laboratory	1,146	1,492	$ 39.73	$ 59,273	$ -		$ -		$ 59,273		$ -		$ -		$ -		$ -		$ -		$ -		
2	3	0	Special Systems	Human Anatomy Area	960	1,250	$ 39.73	$ 49,653	$ -		$ -		$ 49,653		$ -		$ -		$ -		$ -		$ -		$ -		
2	3	0	Special Systems	Human Physiology	1,248	1,625	$ 39.73	$ 64,549	$ -		$ -		$ 64,549		$ -		$ -		$ -		$ -		$ -		$ -		
2	3	0	Special Systems	Research Lab Suite	2,534	3,299	$ 34.05	$ 112,340	$ -		$ -		$ 112,340		$ -		$ -		$ -		$ -		$ -		$ -		
2	3	0	Special Systems	Research Lab Support Area	320	417	$ 39.73	$ 16,551	$ -		$ -		$ 16,551		$ -		$ -		$ -		$ -		$ -		$ -		
2	R	8	Special Systems	New North Wing Penthouse	2,000	2,000	$ -	$ -	$ -		$ -		$ -		$ -		$ -		$ -		$ -		$ -		$ -		
1	0 thru R	0	Special Systems	CNR Area required to be demo to receive new seismic treatment of West Wing - NIC	4,800	6,250	$ -	$ -	$ -		$ -		$ -		$ -		$ -		$ -		$ -		$ -		$ -		
4	0	0	Special Systems	Lab Alcove Areas	118	155	$ 39.73	$ 6,163	$ -		$ -		$ -		$ -		$ 6,163		$ -		$ -		$ -		$ -		
4	0	0	Special Systems	Plant / Insect Teaching Labs	1,281	1,684	$ 39.73	$ 66,900	$ -		$ -		$ -		$ -		$ 66,900		$ -		$ -		$ -		$ -		
4	0	0	Special Systems	Support and Specimen Storage Area	536	705	$ 39.73	$ 27,993	$ -		$ -		$ -		$ -		$ 27,993		$ -		$ -		$ -		$ -		
4	0	9	Special Systems	Herbarium	3,731	4,905	$ 39.73	$ 194,851	$ -		$ -		$ -		$ -		$ 194,851		$ -		$ -		$ -		$ 194,851		TI Portion Only
4	0	0	Special Systems	Mechanical Area	8,745	11,497	$ -	$ -	$ -		$ -		$ -		$ -		$ -		$ -		$ -		$ -		$ -		
4	0	0	Special Systems	Toilet Rooms	500	657	$ -	$ -	$ -		$ -		$ -		$ -		$ -		$ -		$ -		$ -		$ -		
4	0	0	Special Systems	Freezer Farm	531	698	$ 28.38	$ 19,808	$ -		$ -		$ -		$ -		$ 19,808		$ -		$ -		$ -		$ -		
4	0	0	Special Systems	Growth Chambers	393	517	$ 28.38	$ 14,660	$ -		$ -		$ -		$ -		$ 14,660		$ -		$ -		$ -		$ -		
4	0	0	Special Systems	AutoClave	310	408	$ 28.38	$ 11,564	$ -		$ -		$ -		$ -		$ 11,564		$ -		$ -		$ -		$ -		
4	1	0	Special Systems	Lobby Space	1,200	1,578	$ -	$ -	$ -		$ -		$ -		$ -		$ -		$ -		$ -		$ -		$ -		
4	1	0	Special Systems	Open Study Area	250	329	$ -	$ -	$ -		$ -		$ -		$ -		$ -		$ -		$ -		$ -		$ -		
4	1	0	Special Systems	Toilet Rooms	500	657	$ -	$ -	$ -		$ -		$ -		$ -		$ -		$ -		$ -		$ -		$ -		
4	1	0	Special Systems	Advising Space	570	749	$ -	$ -	$ -		$ -		$ -		$ -		$ -		$ -		$ -		$ -		$ -		
4	1	0	Special Systems	Department Administration	934	1,228	$ -	$ -	$ -		$ -		$ -		$ -		$ -		$ -		$ -		$ -		$ -		
4	1	0	Special Systems	Public Health	1,724	2,266	$ 39.73	$ 90,036	$ -		$ -		$ -		$ -		$ 90,036		$ -		$ -		$ -		$ -		
4	1	0	Special Systems	CNR GIS Lab	2,510	3,300	$ 39.73	$ 131,084	$ -		$ -		$ -		$ -		$ 131,084		$ -		$ -		$ -		$ -		
4	1	0	Special Systems	Active Learning Class Room - 115 P	3,130	4,115	$ -	$ -	$ -		$ -		$ -		$ -		$ -		$ -		$ -		$ -		$ -		
4	1	0	Special Systems	Lecture Hall - 350 P	4,446	5,845	$ -	$ -	$ -		$ -		$ -		$ -		$ -		$ -		$ -		$ -		$ -		
4	1	0	Special Systems	Study Area	427	561	$ -	$ -	$ -		$ -		$ -		$ -		$ -		$ -		$ -		$ -		$ -		

CRSA PAYETTE

USU BNR Remodel / New Classroom Lab Building - Parametric Estimate - Scheme 6 (Consensus Solution) Rev 0
Based on preliminary program information by CRSA/Payette dated 12 February 2016
19-Feb-16

JACOBSEN Advisory Services

Wing	Floor	Work Scope Option	Scope Description	Area	Net to Gross Factors: Factor 1.315 Net SF	Factor 1.302 Gross SF	Cost Factor: Factor 1.135 Cost / Unit	Total Cost	Wing / Area: West Renovate 1	Cost /SF	North-West New 1.1	Cost /SF	North 2	Cost /SF	South 3	Cost /SF	New Bldg 4	Cost /SF	Work Scope Options: A: Siesmic Upgrade of North Wing of BNR 6	Cost /SF	B: North Wing of BNR Exterior Closure Option 7	Cost /SF	C: Upgrade Mechanical in North Wing of BNR - Penthouse & Eqiupment 8	Cost /SF	D: Shell-out Herbarium Area and Finish Later 9	Cost /SF
4	1	0	Special Systems	Building Support Area	896	1,178	$ -	$ -	$ -		$ -		$ -		$ -		$ -		$ -		$ -		$ -		$ -	
4	2	0	Special Systems	Offices	960	1,262	$ -	$ -	$ -		$ -		$ -		$ -		$ -		$ -		$ -		$ -		$ -	
4	2	0	Special Systems	Study Area	582	765	$ -	$ -	$ -		$ -		$ -		$ -		$ -		$ -		$ -		$ -		$ -	
4	2	0	Special Systems	Graduate Office Space	885	1,163	$ -	$ -	$ -		$ -		$ -		$ -		$ -		$ -		$ -		$ -		$ -	
4	2	0	Special Systems	Meeting Rooms	252	331	$ -	$ -	$ -		$ -		$ -		$ -		$ -		$ -		$ -		$ -		$ -	
4	2	0	Special Systems	Toilet Rooms	500	657	$ -	$ -	$ -		$ -		$ -		$ -		$ -		$ -		$ -		$ -		$ -	
4	2	0	Special Systems	Advanced Physics Teaching Lab	1,575	2,071	$ 39.73	$ 82,254	$ -		$ -		$ -		$ -		$ 82,254		$ -		$ -		$ -		$ -	
4	2	0	Special Systems	General Biology Teaching Labs	5,032	6,615	$ 39.73	$ 262,796	$ -		$ -		$ -		$ -		$ 262,796		$ -		$ -		$ -		$ -	
4	2	0	Special Systems	General Biology Prep Area	945	1,242	$ 39.73	$ 49,353	$ -		$ -		$ -		$ -		$ 49,353		$ -		$ -		$ -		$ -	
4	2	0	Special Systems	Reasearch Lab Suites	5,112	6,721	$ 39.73	$ 266,974	$ -		$ -		$ -		$ -		$ 266,974		$ -		$ -		$ -		$ -	
4	2	0	Special Systems	Dry Lab	721	948	$ 39.73	$ 37,654	$ -		$ -		$ -		$ -		$ 37,654		$ -		$ -		$ -		$ -	
4	2	0	Special Systems	Lab Alcove Areas	416	547	$ 39.73	$ 21,726	$ -		$ -		$ -		$ -		$ 21,726		$ -		$ -		$ -		$ -	
4	2	0	Special Systems	Lab Support Area	629	827	$ 39.73	$ 32,849	$ -		$ -		$ -		$ -		$ 32,849		$ -		$ -		$ -		$ -	
4	2	0	Special Systems	Cold Room	105	138	$ 39.73	$ 5,484	$ -		$ -		$ -		$ -		$ 5,484		$ -		$ -		$ -		$ -	
4	3	0	Special Systems	Offices	960	1,262	$ -	$ -	$ -		$ -		$ -		$ -		$ -		$ -		$ -		$ -		$ -	
4	3	0	Special Systems	Study Area	1,456	1,914	$ -	$ -	$ -		$ -		$ -		$ -		$ -		$ -		$ -		$ -		$ -	
4	3	0	Special Systems	Toilet Rooms	500	657	$ -	$ -	$ -		$ -		$ -		$ -		$ -		$ -		$ -		$ -		$ -	
4	3	0	Special Systems	Ecology Teaching Lab	1,575	2,071	$ 39.73	$ 82,254	$ -		$ -		$ -		$ -		$ 82,254		$ -		$ -		$ -		$ -	
4	3	0	Special Systems	Lab Support Area	315	414	$ 39.73	$ 16,451	$ -		$ -		$ -		$ -		$ 16,451		$ -		$ -		$ -		$ -	
4	3	0	Special Systems	Cell / Mol Bio / Genetics Lab	1,260	1,656	$ 39.73	$ 65,803	$ -		$ -		$ -		$ -		$ 65,803		$ -		$ -		$ -		$ -	
4	3	0	Special Systems	Micro Bio Teaching Lab	1,263	1,660	$ 39.73	$ 65,960	$ -		$ -		$ -		$ -		$ 65,960		$ -		$ -		$ -		$ -	
4	3	0	Special Systems	Micro Bio Prep Area	630	828	$ 39.73	$ 32,902	$ -		$ -		$ -		$ -		$ 32,902		$ -		$ -		$ -		$ -	
4	3	0	Special Systems	Micro Bio Media Prep Area	630	828	$ 39.73	$ 32,902	$ -		$ -		$ -		$ -		$ 32,902		$ -		$ -		$ -		$ -	
4	3	0	Special Systems	Micro Bio Teaching Lab	1,240	1,630	$ 39.73	$ 64,759	$ -		$ -		$ -		$ -		$ 64,759		$ -		$ -		$ -		$ -	
4	3	0	Special Systems	Research Lab Suites	4,402	5,787	$ 39.73	$ 229,894	$ -		$ -		$ -		$ -		$ 229,894		$ -		$ -		$ -		$ -	
4	3	0	Special Systems	Dry Lab	811	1,066	$ 39.73	$ 42,354	$ -		$ -		$ -		$ -		$ 42,354		$ -		$ -		$ -		$ -	
4	3	0	Special Systems	BSL-2	629	827	$ 39.73	$ 32,849	$ -		$ -		$ -		$ -		$ 32,849		$ -		$ -		$ -		$ -	
4	3	0	Special Systems	Lab Support Area	368	484	$ 39.73	$ 19,219	$ -		$ -		$ -		$ -		$ 19,219		$ -		$ -		$ -		$ -	
4	3	0	Special Systems	Cold Rooms	210	276	$ 39.73	$ 10,967	$ -		$ -		$ -		$ -		$ 10,967		$ -		$ -		$ -		$ -	
4	3	0	Special Systems	Lab Alcove Areas	420	552	$ 39.73	$ 21,934	$ -		$ -		$ -		$ -		$ 21,934		$ -		$ -		$ -		$ -	
4	3	0	Special Systems	Graduate Office Space	1,034	1,359	$ -	$ -	$ -		$ -		$ -		$ -		$ -		$ -		$ -		$ -		$ -	
4	3	0	Special Systems	Meeting Rooms	252	331	$ -	$ -	$ -		$ -		$ -		$ -		$ -		$ -		$ -		$ -		$ -	
4	3	0	Special Systems	Building Support Area	126	166	$ -	$ -	$ -		$ -		$ -		$ -		$ -		$ -		$ -		$ -		$ -	
4	R	0	Special Systems	Penthouse	12,210	12,210	$ -	$ -	$ -		$ -		$ -		$ -		$ -		$ -		$ -		$ -		$ -	
4	0	0	Special Systems			-	$ -	$ -	$ -		$ -		$ -		$ -		$ -		$ -		$ -		$ -		$ -	
4	0	0	Special Systems			-	$ -	$ -	$ -		$ -		$ -		$ -		$ -		$ -		$ -		$ -		$ -	
			Total Special Systems		134,142	170,566		**$ 3,043,062**	**$ -**	**$ -**	**$ -**	**$ -**	**$ 936,388**	**$ 20.87**	**$ 66,278**	**$ 28.38**	**$ 2,040,396**	**$ 19.95**	**$ -**	**$ -**	**$ -**	**$ -**	**$ -**	**$ -**	**$ 194,851**	**$ 39.73**
			Site work																							
1	0	0	Site work	Site work - West Wing - NIC	-		$ 200,000.00	$ -	$ -		$ -		$ -		$ -		$ -		$ -		$ -		$ -		$ -	
1.1	0	8	Site work	Site work - West Wing New Addition	1		$ 100,000.00	$ 100,000	$ -		$ 100,000		$ -		$ -		$ -		$ -		$ -		$ 100,000		$ -	
2	0	0	Site work	Site work - North Wing Area	1		$ 400,000.00	$ 400,000	$ -		$ -		$ 400,000		$ -		$ -		$ -		$ -		$ -		$ -	
3	0	0	Site work	Site work - South Wing Area - NIC	-		$ 200,000.00	$ -	$ -		$ -		$ -		$ -		$ -		$ -		$ -		$ -		$ -	
4	0	0	Site work	Site work New Building Area	1		$ 900,000.00	$ 900,000	$ -		$ -		$ -		$ -		$ 900,000		$ -		$ -		$ -		$ -	
			Total Site work					**$ 1,400,000**	**$ -**	**$ -**	**$ 100,000**	**$ 19.52**	**$ 400,000**	**$ 8.92**	**$ -**	**$ -**	**$ 900,000**	**$ 8.80**	**$ -**	**$ -**	**$ -**	**$ -**	**$ 100,000**	**$ 2.23**	**$ -**	**$ -**
			Subtotal					**$ 44,096,681**	**$ -**		**$ 1,770,721**		**$ 13,557,545**		**$ 492,644**		**$ 28,275,770**		**$ 2,025,000**		**$ 1,436,500**		**$ 751,958**		**$ 870,900**	
			General Conditions, Fees, Escalation, & Contingency																							
			GC's, Fees, Insurances, Contingency, Etc.				21%	$ 9,260,303	$ -		$ 371,851	$ 72.60	$ 2,847,084	$ 63.47	$ 103,455	$ 44.29	$ 5,937,912	$ 58.04	$ 425,250		$ 301,665		$ 157,911		$ 182,889	
			Escalation Total Project from 1st Qtr 2016 to 3rd Quarter 2017				4.5%	$ 2,401,064	$ -		$ 96,416		$ 738,208		$ 26,824		$ 1,539,616		$ 110,261		$ 78,217		$ 40,944		$ 47,421	
			Escalation BNR Portion of Project from 3rd Quarter 2017 to 3rd Qtr 2019				9.0%	$ 1,800,427	$ -		$ 201,509		$ 1,542,855		$ 56,063		$ -		$ 230,446		$ 163,474		$ 85,573		$ 99,109	
			Total GCs, Fees, Escalation, & Contingency					**$ 13,461,795**			**$ 669,776**		**$ 5,128,148**		**$ 186,343**		**$ 7,477,527**		**$ 765,957**		**$ 543,357**		**$ 284,428**		**$ 329,419**	
			Total Project Estimated Cost					**$ 57,558,475**	**$ -**		**$ 2,440,497**	**$ 476.47**	**$ 18,685,693**	**$ 416.54**	**$ 678,987**	**$ 290.69**	**$ 35,753,298**	**$ 349.50**	**$ 2,790,957**	**$ 62.22**	**$ 1,979,857**	**$ 44.13**	**$ 1,036,386**	**$ 23.10**	**$ 1,200,319**	**$ 244.71**
			Current Project Budget																						**TI Portion Only**	
				New Building				$ 33,750,000	**$ -**		**$ -**		**$ -**		**$ -**		**$ 33,750,000**									
				BNR Renovation & Addition(s)				$ 18,000,000	**$ -**		**$ -**		**$ 18,000,000**		**$ -**		**$ -**									
				Total Budget				**$ 51,750,000**	**$ -**		**$ -**		**$ 18,000,000**		**$ -**		**$ 33,750,000**									
				Amount Under or (Over) Budget				$ (5,808,475)	**$ -**		$ (2,440,497)		$ (685,693)		$ (678,987)		$ (2,003,298)									
			Total Affected Gross SF	**Delta compare to Target GSF**			1,494	163,997		9,380	SF is existing but NIC for $		5,122	Does not include Transformer Vault Area	44,860	Includes Penthouse SF	2,336		102,300	Include Penthouse SF	44,860		44,860		44,860		4,905	
				Target GSF				165,491		-			7,540		45,885		2,336		102,888								
			Total Cost / Affected Gross SF				Cost / sf w total project sf $	350.97	**$ -**		**$ 476.47**		**$ 416.54**		**$ 290.69**		**$ 349.50**									
				Cost /sf for actual building sf				**$ 372.26**																		

CRSA PAYETTE

FF&E Cost Summary

Program #	Category	Status	Type	Unit Quantity	Unit Cost	Cost/Room	# of Rooms	Total Cost
1.1.1	Department Head Office							
	Furniture	3	30" Worksurface- 19 LF	1	$1,928.81	$1,928.81		
	Furniture	3	36"dia. Round Table	1	$432.66	$432.66		
	Furniture	3	42" Lateral File 2-Drawers	1	$495.19	$495.19		
	Furniture	3	Flipper Door Unit w/ Task Light- 16LF	1	$1,222.10	$1,222.10		
	Furniture	3	Guest Chair	3	$203.04	$609.12		
	Furniture	3	Pedestal File Cabinet	1	$293.67	$293.67		
	Furniture	3	Task Chair	1	$740.25	$740.25		
	Furniture	3	Trash/Recycle Bin	2	$6.00	$12.00		
	Specialty Equipment	3	42" Flat Panel Monitor, Wall mounted	1		$0.00		
	Specialty Equipment	4	Office Computer	1		$0.00		
Total	Department Head Office					$5,733.80	1	$5,734
1.1.2	Department Reception							
	Furniture	3	42" Lateral File 2-Drawers	1	$495.19	$495.19		
	Furniture	3	Guest Chair	3	$203.04	$609.12		
Total	Department Reception					$1,104.31	1	$1,104
1.1.3	Administrative Assistant							
	Furniture	3	30" Worksurface- 12LF	1	$2,517.06	$2,517.06		
	Furniture	3	42" Lateral File 2-Drawers	1	$495.19	$495.19		
	Furniture	3	Pedestal File Cabinet	1	$293.67	$293.67		
	Furniture	3	Task Chair	1	$740.25	$740.25		
	Furniture	3	Trash/Recycle Bin	2	$6.00	$12.00		
	Specialty Equipment	4	Office Computer	1		$0.00		
Total	Administrative Assistant					$4,058.17	2	$8,116
1.1.4	Administrative Staff Office							
	Furniture	3	30" Worksurface Adjustable Height- 8 LF	1	$1,126.84	$1,126.84		
	Furniture	3	42" Lateral File 2-Drawers	1	$495.19	$495.19		
	Furniture	3	42" Lateral File 4-Drawers	2	$843.73	$1,687.46		
	Furniture	3	Flipper Door Unit- 8 LF	1	$895.72	$895.72		
	Furniture	3	Guest Chair	1	$203.04	$203.04		
	Furniture	3	Task Chair	1	$740.25	$740.25		
	Furniture	3	Trash/Recycle Bin	2	$6.00	$12.00		
	Specialty Equipment	4	Office Computer	1		$0.00		
Total	Administrative Staff Office					$5,160.50	6	$30,963
1.1.5	IT Staff Office							
	Furniture	3	3' Metal Gorilla Shelves	1	$150.00	$150.00		
	Furniture	3	12" Deep Wall Mounted Shelves- 12 LF	1	$300.00	$300.00		
	Furniture	3	18" Deep Wall Mounted Shelves- 12 LF	1	$400.00	$400.00		
	Furniture	3	30" Worksurface- 16 LF	1	$1,200.02	$1,200.02		
	Furniture	3	Pedestal File Cabinet	1	$293.67	$293.67		
	Furniture	3	Task Chair	2	$740.25	$1,480.50		
	Furniture	3	Trash/Recycle Bin	2	$6.00	$12.00		
Total	IT Staff Office					$3,836.19	1	$3,836
1.2.1	Conference Room - Large							
	Furniture	3	24"x60" Table	18	$1,112.09	$20,017.62		
	Furniture	3	Conference Chair	40	$432.25	$17,290.00		
	Furniture	3	Trash/Recycle Bin	2	$6.00	$12.00		
Total	Conference Room - Large					$37,319.62	1	$37,320
1.2.2	Conference Room - Small							
	Furniture	3	18"x72" Side Table	1	$373.81	$373.81		
	Furniture	3	30"x72" Table	4	$1,144.49	$4,577.96		
	Furniture	3	Conference Chair	25	$432.25	$10,806.25		
	Furniture	3	Trash/Recycle Bin	2	$6.00	$12.00		
Total	Conference Room - Small					$15,770.02	1	$15,770

FF&E Cost Summary

Program #	Category	Status	Type	Unit Quantity	Unit Cost	Cost/Room	# of Rooms	Total Cost
1.2.3	Breakroom							
	Furniture	3	36" dia. Round Table	2	$423.31	$846.62		
	Furniture	3	Guest Chair	6	$203.04	$1,674.32		
	Furniture	3	Trash/Recycle Bin	2	$6.00	$12.00		
	Specialty Equipment	4	36"x30" Refrigerator	1		$0.00		
	Specialty Equipment	4	Dishwasher	1		$0.00		
Total	Break Room					$2,482.94	2	$4,966
1.2.4	Copy / Mail / Workroom							
	Furniture	3	30"x60" Table	1	$448.65	$448.65		
	Furniture	3	Trash/Recycle 23gal	2	$60.00	$120.00		
	Specialty Equipment	4	Copier	2		$0.00		
Total	Copy / Mail / Workroom					$568.65	4	$2,275
1.2.5	Department Storage Room							
	Furniture	3	30" Wide Shelving	2	$462.13	$924.26		
	Furniture	3	42" Lateral File 5-Drawers	2	$945.37	$1,890.74		
Total	Department Storage Room					$2,815.00	1	$2,815
1.2.6	IT Workroom							
	Furniture	3	7'x3' Racks	1	$2,670.00	$2,670.00		
	Furniture	3	12" Deep Wall Mounted Shelves- 10 LF	1	$211.72	$211.72		
	Furniture	3	24" Deep Wall Mounted Shelves- 11 LF	1	$300.00	$300.00		
	Furniture	3	24" Worksurface- 10 LF	1	$536.21	$536.21		
Total	IT Workroom					$3,717.93	1	$3,718
2.1.1	Advising Center Reception							
	Furniture	3	24" Side Table	1	$206.22	$206.22		
	Furniture	3	24"x72" Table	1	$493.10	$493.10		
	Furniture	3	30" Worksurface- 5 LF	1	$493.10	$493.10		
	Furniture	3	36" Brochure Rack	1	$150.00	$150.00		
	Furniture	3	42" Lateral File 2-Drawers	1	$495.19	$495.19		
	Furniture	3	Guest Chair	1	$203.04	$203.04		
	Furniture	3	Lounge Chair	3	$790.40	$2,371.20		
	Furniture	3	Task Chair	3	$740.25	$2,220.75		
	Furniture	3	Trash/Recycle Bin	2	$6.00	$12.00		
	Specialty Equipment	4	Office Computer	2		$0.00		
Total	Advising Center Reception					$6,644.60	1	$6,645
2.1.2	Director of Undergraduate Studies Office							
	Furniture	3	12" Deep Wall Mounted Shelves- 7 LF	1	$314.45	$314.45		
	Furniture	3	14" Wall Mounted Bookcase- 12 LF	1	$2,218.25	$2,218.25		
	Furniture	3	24" Worksurface- 16 LF	1	$1,036.10	$1,036.10		
	Furniture	3	Guest Chair	2	$203.04	$406.08		
	Furniture	3	Pedestal File Cabinet	1	$293.67	$293.67		
	Furniture	3	Task Chair	1	$740.25	$740.25		
	Furniture	3	Trash/Recycle Bin	2	$6.00	$12.00		
	Specialty Equipment	4	Office Computer	1		$0.00		
Total	Director of Undergraduate Studies Office					$5,020.80	1	$5,021
2.1.3	Biology Advisor Office							
	Furniture	3	12" dia. Side Table	1	$715.44	$715.44		
	Furniture	3	30" Worksurface- 10 LF	1	$1,067.58	$1,067.58		
	Furniture	3	42" Lateral File 2-Drawers	1	$495.19	$495.19		
	Furniture	3	Flipper Door Unit- 10 LF	1	$1,318.00	$1,318.00		
	Furniture	3	Lounge Chair	3	$790.40	$2,371.20		
	Furniture	3	Pedestal File Cabinet	2	$293.67	$587.34		
	Furniture	3	Task Chair	1	$740.25	$740.25		
	Furniture	3	Trash/Recycle Bin	2	$6.00	$12.00		
	Specialty Equipment	3	36" Flat Panel Monitor, Wall mounted	1		$0.00		
Total	Biology Advisor Office					$7,307.00	1	$7,307

FF&E Cost Summary

Program #	Category	Status	Type	Unit Quantity	Unit Cost	Cost/Room	# of Rooms	Total Cost
2.1.4	Academic Advising Staff Office							
	Furniture	3	30"x84" Worksurface	1	$1,500.00	$1,500.00		
	Furniture	3	42" Lateral File 2 Drawers	2	$495.19	$990.38		
	Furniture	3	Flipper Door Unit- 7 LF	1	$972.14	$972.14		
	Furniture	3	Guest Chair	2	$203.04	$406.08		
	Furniture	3	Pedestal File Cabinet	1	$293.67	$293.67		
	Furniture	3	Task Chair	1	$740.25	$740.25		
	Furniture	3	Trash/Recycle Bin	2	$6.00	$12.00		
	Specialty Equipment	4	Countertop Printer	1		$0.00		
	Specialty Equipment	4	Office Computer	1		$0.00		
Total	Academic Advising Staff Office					$4,914.52	1	$4,915
3.1	Plant Pest Diagnostic Lab Suite							
	Furniture	3	18"D Wire Shelving	1	$135.00	$135.00		
	Furniture	3	18"x30" Table	2	$293.67	$587.34		
	Furniture	3	24"x36" Table	2	$400.00	$800.00		
	Furniture	3	24"x48" Table	7	$500.00	$3,500.00		
	Furniture	3	36"x72" Table	2	$1,200.00	$2,400.00		
	Furniture	3	File Cabinet	2	$293.67	$587.34		
	Furniture	3	Guest Chair	2	$203.04	$406.08		
	Furniture	3	Task Chair	14	$740.25	$10,363.50		
	Specialty Equipment	2	6' Laminar Flow Hood	1	$10,000.00	$10,000.00		
	Specialty Equipment	4	32"x32" Refrigerator	1	$0.00	$0.00		
	Specialty Equipment	4	Cart	2	$0.00	$0.00		
	Specialty Equipment	4	Computer	11	$0.00	$0.00		
	Specialty Equipment	4	Freezer	1	$0.00	$0.00		
	Specialty Equipment	4	Stacking Incubator	2	$0.00	$0.00		
	Specialty Equipment	4	Undercounter Fridge	1	$0.00	$0.00		
Total	Plant Pest Diagnostic Lab Suite					$28,779.26	1	$28,779
4.1.1	Faculty Office							
	Furniture	3	12" Deep Wall Mounted Shelves- 7 LF	1	$314.45	$314.45		
	Furniture	3	14" Wall Mounted Bookcase- 12 LF	1	$2,218.25	$2,218.25		
	Furniture	3	24" Worksurface- 16 LF	1	$1,036.10	$1,036.10		
	Furniture	3	Guest Chair	2	$203.04	$406.08		
	Furniture	3	Pedestal File Cabinet	1	$293.67	$293.67		
	Furniture	3	Task Chair	1	$740.25	$740.25		
	Furniture	3	Trash/Recycle Bin	2	$6.00	$12.00		
	Specialty Equipment	4	Office Computer	1		$0.00		
Total	Faculty Office					$5,020.80	34	$170,707
4.1.2	Adjunct / Visiting Faculty Office							
	Furniture	3	12"x36" Bookcase	1	$820.00	$820.00		
	Furniture	3	30" Worksurface- 6 LF	2	$1,819.72	$3,639.44		
	Furniture	3	Flipper Door Unit- 6 LF	2	$821.92	$1,643.84		
	Furniture	3	Pedestal File Cabinet	2	$293.67	$587.34		
	Furniture	3	Task Chair	2	$740.25	$1,480.50		
	Furniture	3	Trash/Recycle Bin	2	$6.00	$12.00		
	Specialty Equipment	4	Office Computer	2		$0.00		
Total	Adjunct / Visiting Faculty Office					$8,183.12	10	$81,831
4.1.3	Emeritus / Post Doc Office							
	Furniture	3	12"x36" Bookcase	1	$820.00	$820.00		
	Furniture	3	30" Worksurface- 6 LF	2	$1,819.72	$3,639.44		
	Furniture	3	Flipper Door Unit- 6 LF	2	$821.92	$1,643.84		
	Furniture	3	Pedestal File Cabinet	2	$293.67	$587.34		
	Furniture	3	Task Chair	2	$740.25	$1,480.50		
	Furniture	3	Trash/Recycle Bin	2	$6.00	$12.00		
	Specialty Equipment	4	Office Computer	2		$0.00		
Total	Emeritus / Post Doc Office					$8,183.12	2	$16,366
4.1.4	Graduate Assistant Office							
	Furniture	3	Flipper Door Unit- 7 LF	7	$972.14	$6,804.98		
	Furniture	3	Pedestal File Cabinet	7	$293.67	$2,055.69		
	Furniture	3	Task Chair	7	$740.25	$5,181.75		
	Furniture	3	Trash/Recycle Bin	4	$6.00	$24.00		
	Specialty Equipment	4	Office Computer	7		$0.00		
Total	Graduate Assistant Office					$14,699.25	8	$117,594
4.1.4A	Data Processing Space (3PI)							
	Furniture	3	24"x54" Table	6	$600.00	$3,600.00		
	Furniture	3	Task Chair	6	$740.25	$4,441.50		
	Specialty Equipment	4	Computer	6	$0.00	$0.00		
Total	Data Processing Space (3PI)					$8,041.50	7	$56,291
4.1.4B	Data Processing Space (2PI)							
	Furniture	3	24"x48" Table	2	$500.00	$1,000.00		
	Furniture	3	24"x54" Table	1	$600.00	$600.00		
	Furniture	3	Task Chair	3	$740.25	$2,220.75		
	Specialty Equipment	4	Computer	3	$0.00	$0.00		
Total	Data Processing Space (2PI)					$3,820.75	1	$3,821

FF&E Cost Summary

Program #	Category	Status	Type	Unit Quantity	Unit Cost	Cost/Room	# of Rooms	Total Cost
4.2.1	Group Study - Small							
	Furniture	3	36"x72" Table	1	$522.41	$522.41		
	Furniture	3	Group Study Chair	5	$372.61	$1,863.05		
	Specialty Equipment	3	42" Flat Panel Monitor, Wall mounted	1		$0.00		
Total	Group Study - Small					$2,385.46	1	$2,385
4.2.2	Group Study - Large							
	Furniture	3	48" Worktable- 10 LF	1	$1,081.99	$1,081.99		
	Furniture	3	Group Study Chair	8	$372.61	$2,980.88		
	Furniture	3	Trash/Recycle Bin	2	$6.00	$12.00		
	Specialty Equipment	3	42" Flat Panel Monitor, Wall mounted	1		$0.00		
Total	Group Study - Large					$4,074.87	6	$24,449
4.2.3	Informal Student Lounge							
	Furniture	3	36"dia. Round Table	1	$432.66	$432.66		
	Furniture	3	36"x96" Table	1	$805.00	$805.00		
	Furniture	3	Bench Seat	2	$2,017.01	$4,034.02		
	Furniture	3	Lounge Chair	4	$702.70	$2,810.80		
Total	Informal Student Lounge					$8,082.48	6	$48,495
4.2.4	Biology Tutoring Room							
	Furniture	3	18"x30" Lockable Metal Cabinets	4	$505.74	$2,022.96		
	Furniture	3	24"x84" Table	4	$395.17	$1,580.68		
	Furniture	3	Chair	30	$372.61	$11,178.30		
	Furniture	3	Trash/Recycle Bin	2	$6.00	$12.00		
Total	Biology Tutoring Room					$17,928.40	1	$17,928
4.2.5	Tutoring Room - Small (10-12 Students)							
	Furniture	3	48" Diameter Table	3	$1,500.00	$4,500.00		
	Furniture	3	Bookcase	1	$800.00	$800.00		
	Furniture	3	Lounge	1	$1,400.00	$1,400.00		
	Furniture	3	Task Chair	12	$740.25	$8,883.00		
Total	Tutoring Room - Small (10-12 Students)					$20,054.32	1	$20,054
4.2.6	Lobby / Poster Session Pinup							
	Furniture	3	18"x36" Ottoman	2	$316.68	$633.36		
	Furniture	3	24" dia. Ottoman	3	$257.04	$771.12		
	Furniture	3	Bar Stool	6	$304.78	$1,828.68		
	Furniture	3	Lounge Chair	12	$702.70	$8,432.40		
Total	Lobby / Poster Session Pinup					$11,665.56	1	$11,666
4.2.7	BNR Lobby Addition							
	Furniture	3	24" dia. Ottoman	6	$257.04	$1,542.24		
	Furniture	3	36" Square Table	2	$340.00	$680.00		
	Furniture	3	48" Bench	5	$680.00	$3,400.00		
	Furniture	3	Bar Stool	5	$304.78	$1,523.90		
	Furniture	3	Lounge Chair	28	$702.70	$19,675.60		
Total	BNR Lobby Addition					$26,821.74	1	$26,822

CRSA PAYETTE

FF&E Cost Summary

Program #	Category	Status	Type	Unit Quantity	Unit Cost	Cost/Room	# of Rooms	Total Cost
5.1.1A	**Open Lab Bench Area**							
	Furniture	3	Lab Stool	16	$460.34	$7,365.44		
	Specialty Equipment	4	-20C Freezer	3	$0.00	$0.00		
	Specialty Equipment	1	4x1 Gas Cylinder Rack	1	$1,000.00	$0.00		
	Specialty Equipment	4	5' Double Door Refrigerator	1	$7,000.00	$0.00		
	Specialty Equipment	2	6' Laminar Flow Hood	1	$15,000.00	$10,000.00		
	Specialty Equipment	4	32"x32" Refrigerator	4	$0.00	$0.00		
	Specialty Equipment	4	Generic Equipment	3	$0.00	$0.00		
	Specialty Equipment	4	Centrifuge	1	$0.00	$0.00		
	Specialty Equipment	4	Generic Gas Tank	4	$0.00	$0.00		
	Specialty Equipment	4	Growth Chamber	1	$0.00	$0.00		
	Specialty Equipment	4	Incubator	1	$0.00	$0.00		
Total	**Open Lab Bench Area**					**$17,365.44**	1	**$17,365**
5.1.1A	**Open Lab Bench Area**							
	Furniture	3	Lab Stool	16	$460.34	$7,365.44		
	Specialty Equipment	4	-20C Freezer	3		$0.00		
	Specialty Equipment	1	4x1 Gas Cylinder Rack	1	$0.00	$0.00		
	Specialty Equipment	4	5' Double Door Refrigerator	1	$0.00	$0.00		
	Specialty Equipment	2	6' Laminar Flow Hood	1	$15,000.00	$10,000.00		
	Specialty Equipment	4	32"x32" Refrigerator	4	$0.00	$0.00		
	Specialty Equipment	4	Centrifuge	1	$0.00	$0.00		
	Specialty Equipment	4	Drying Oven	1	$0.00	$0.00		
	Specialty Equipment	4	Generic Equipment	3	$0.00	$0.00		
	Specialty Equipment	4	Generic Gas Tank	4	$0.00	$0.00		
	Specialty Equipment	4	Growth Chamber	2	$0.00	$0.00		
	Specialty Equipment	4	Incubator	1	$0.00	$0.00		
	Specialty Equipment	4	Low-Temperature Incubator	4	$0.00	$0.00		
Total	Open Lab Bench Area					$17,365.44	2	$34,731
5.1.2A	**Open Lab Bench Area**							
	Furniture	3	Lab Stool	18	$460.34	$8,286.12		
	Specialty Equipment	1	4x1 Gas Cylinder Rack	1	$0.00	$0.00		
	Specialty Equipment	4	32"x32" Refrigerator	7	0	0		
	Specialty Equipment	4	Electrophoresis Set-up	1	$0.00	$0.00		
	Specialty Equipment	4	Generic Equipment	10	$0.00	$0.00		
	Specialty Equipment	4	Generic Gas Tank	4	$0.00	$0.00		
Total	Open Lab Bench Area			41		$8,286.12	14	$116,006
5.1.2B	**Microscope Room**							
	Furniture	3	Task Chair	2	$740.25	$1,480.50		
	Specialty Equipment	4	Microscope	2	$0.00	$0.00		
	Specialty Equipment	4	Wall Mounted Computer Screen	2	$0.00	$0.00		
Total	Microscope Room			6		$1,480.50	8	$11,844
5.1.2C	**HPLC Room**							
	Specialty Equipment	1	5' Fume Hood	1	$11,000.00	$0.00		
Total	HPLC Room			1		$0.00	8	$0
5.1.2D	**Radioisotope Room**							
	Specialty Equipment	1	5' Fume Hood	1	$11,000.00	$0.00		
	Specialty Equipment	4	Centrifuge	1	$0.00	$0.00		
	Specialty Equipment	4	Chromatography Column	1	$0.00	$0.00		
	Specialty Equipment	4	Nitrogen Tank	3	$0.00	$0.00		
	Specialty Equipment	4	Refrigerator/Freezer	1	$0.00	$0.00		
Total	Radioisotope Room			7		$0.00	1	$0
5.1.2E	**Support Room**							
	Specialty Equipment	3	18"D Chemical Storage Cabinet 4'	2	$2,000.00	$4,000.00		
Total	Support Room			2		$4,000.00	1	$4,000
5.1.3A	**Open Lab Bench Area**							
	Furniture	3	30"x36" Table	2	$1,000.00	$2,000.00		
	Furniture	3	Lab Stool	18	$460.34	$8,286.12		
	Furniture	3	Task Chair	2	$740.25	$1,480.50		
	Specialty Equipment	1	4x1 Gas Cylinder Rack	1	$0.00	$0.00		
	Specialty Equipment	2	6' Laminar Flow Hood	1	$15,000.00	$15,000.00		
	Specialty Equipment	4	32"x32" Refrigerator	7	$0.00	$0.00		
	Specialty Equipment	4	Computer	2	$0.00	$0.00		
	Specialty Equipment	4	Generic Equipment	12	$0.00	$0.00		
	Specialty Equipment	4	Generic Gas Tank	4	$0.00	$0.00		
Total	**Open Lab Bench Area**			49		**$26,766.62**	1	**$26,767**
5.1.3C	**Insect Rearing Room**							
	Furniture	3	30"D Wire Shelving	4	$240.00	$960.00		
	Specialty Equipment	1	Blackout Curtain	1	$0.00	$0.00		
	Specialty Equipment	4	Small Insect Cabinet	1	$99.00	$0.00		
Total	**Insect Rearing Room**			6		**$960.00**	1	**$960**
5.1.3D	**Plant Growth Room**							
	Furniture	3	18"D Wire Shelving	6	$130.00	$780.00		
Total	**Plant Growth Room**			6		**$780.00**	1	**$780**

FF&E Cost Summary

Program #	Category	Status	Type	Unit Quantity	Unit Cost	Cost/Room	# of Rooms	Total Cost
5.1.4A	**Open Lab Bench Area**							
	Furniture	3	Lab Stool	18	$460.34	$8,286.12		
	Specialty Equipment	1	4x1 Gas Cylinder Rack	1	$0.00	$0.00		
	Specialty Equipment	4	32"x32" Refrigerator	7	$0.00	$0.00		
	Specialty Equipment	4	Generic Equipment	12	$0.00	$0.00		
	Specialty Equipment	4	Generic Gas Tank	11	$0.00	$0.00		
	Open Lab Bench Area			49		**$8,286.12**	1	**$8,286**
5.1.4C	**Glassware Wash Room**							
	Specialty Equipment	3	Undercounter Glassware Washer	2	$8,000.00	$16,000.00		
Total	**Glassware Wash Room**			2		**$16,000.00**	1	**$16,000**
5.1.4E	**Mass Spec Room**							
	Specialty Equipment	1	4' Fume Hood	1	$10,000.00	$0.00		
Total	**Mass Spec Room**			1		**$10,000.00**	1	**$10,000**
5.1.5A	**Open Lab Bench Area**							
	Furniture	3	Lab Stool	18	$460.34	$8,286.12		
	Specialty Equipment	1	4x1 Gas Cylinder Rack	1	$0.00	$0.00		
	Specialty Equipment	2	6' Laminar Flow Hood	1	$15,000.00	$15,000.00		
	Specialty Equipment	4	32"x32" Refrigerator	7	$0.00	$0.00		
	Specialty Equipment	4	Generic Equipment	12	$0.00	$0.00		
	Specialty Equipment	4	Generic Gas Tank	4	$0.00	$0.00		
Total	**Open Lab Bench Area**			43		**$23,286.12**	1	**$23,286**
5.1.5B	**RNA Room**							
	Specialty Equipment	2	4' Laminar Flow Hood	1	$10,000.00	$10,000.00		
Total	**RNA Room**			1		**$10,000.00**	1	**$10,000**
5.1.6A	**Open Lab Bench Area**							
	Furniture	3	Lab Stool	18	$460.34	$8,286.12		
	Specialty Equipment	1	4x1 Gas Cylinder Rack	1	$0.00	$0.00		
	Specialty Equipment	2	6' Laminar Flow Hood	2	$15,000.00	$30,000.00		
	Specialty Equipment	4	32"x32" Refrigerator	5	$0.00	$0.00		
	Specialty Equipment	4	Generic Equipment	12	$0.00	$0.00		
	Specialty Equipment	4	Generic Gas Tank	4	$0.00	$0.00		
Total	**Open Lab Bench Area**			42		**$38,286.12**	1	**$38,286**
5.1.6B	**HPLC Room**							
	Specialty Equipment	4	32"x32" Refrigerator	1	$0.00	$0.00		
Total	**HPLC Room**			1		**$0.00**	0	**$0**
5.1.6C	**Microscope Room**							
	Furniture	3	Task Chair	2	$740.25	$1,480.50		
	Specialty Equipment	4	Microscope	2	$0.00	$0.00		
Total	**Microscope Room**			4		**$1,480.50**	1	**$1,481**
5.1.7A	**Open Lab Bench Area**							
	Furniture	3	30"x36" Table	4	$833.00	$3,332.00		
	Furniture	3	Lab Stool	14	$460.34	$6,444.76		
	Furniture	3	Task Chair	4	$740.25	$2,961.00		
	Specialty Equipment	1	4x1 Gas Cylinder Rack	1	$0.00	$0.00		
	Specialty Equipment	2	6' Laminar Flow Hood	1	$15,000.00	$15,000.00		
	Specialty Equipment	4	32"x32" Refrigerator	7	$0.00	$0.00		
	Specialty Equipment	4	Computer	4	$0.00	$0.00		
	Specialty Equipment	4	Generic Equipment	10	$0.00	$0.00		
	Specialty Equipment	4	Generic Gas Tank	4	$0.00	$0.00		
Total	**Open Lab Bench Area**			49		**$27,737.76**	1	**$27,738**
5.1.7B	**Post-PCR Room**							
	Specialty Equipment	4	-20C Freezer	1		$0.00		
	Specialty Equipment	4	32"x32" Refrigerator	1	$0.00	$0.00		
Total	**Post-PCR Room**			2		**$0.00**	1	**$0**
5.1.7C	**RNA Room**							
	Specialty Equipment	1	5' Fume Hood	1	$11,000.00	$0.00		
Total	**RNA Room**			1		**$11,000.00**	1	**$11,000**
5.1.7D	**Insect Rearing Room**							
	Furniture	3	30"D Wire Shelving	4	$220.00	$880.00		
	Specialty Equipment	1	Blackout Curtain	1	$0.00	$0.00		
	Specialty Equipment	4	Small Insect Cabinet	1	$99.00	$0.00		
Total	**Insect Rearing Room**			6		**$4,099.00**	1	**$4,099**
5.1.8A	**Open Lab Bench Area**							
	Furniture	3	Lab Stool	12	$460.34	$5,524.08		
	Specialty Equipment	1	4x1 Gas Cylinder Rack	1	$0.00	$0.00		
	Specialty Equipment	4	32"x32" Refrigerator	7	$0.00	$0.00		
	Specialty Equipment	4	Generic Equipment	10	$0.00	$0.00		
	Specialty Equipment	4	Generic Gas Tank	4	$0.00	$0.00		
Total	**Open Lab Bench Area**			34		**$5,524.08**	1	**$5,524**

FF&E Cost Summary

Program #	Category	Status	Type	Unit Quantity	Unit Cost	Cost/Room	# of Rooms	Total Cost
5.1.8B	**Equipment Alcove**							
	Specialty Equipment	4	32"x32" Refrigerator	2	$0.00	$0.00		
	Specialty Equipment	4	Freezer	2	$0.00	$0.00		
	Specialty Equipment		Generic Equipment	5	$0.00	$0.00		
Total	**Equipment Alcove**			9		**$0.00**	1	**$0**
5.1.8C	**Sterile Work Room**							
	Specialty Equipment	1	5' Fume Hood	1	$11,000.00	$0.00		
	Specialty Equipment	2	6' Laminar Flow Hood	1	$15,000.00	$15,000.00		
Total	**Sterile Work Room**			2		**$21,000.00**	1	**$21,000**
5.1.9	**Computational Lab**							
	Furniture	3	24"x24" Table	1	$206.22	$206.22		
	Furniture	3	24"x60" Table	4	$1,000.00	$4,000.00		
	Furniture	3	48" Diameter Table	1	$1,500.00	$1,500.00		
	Furniture	3	Chair	4	$372.61	$1,490.44		
	Furniture	3	Lab Stool	5	$460.34	$2,301.70		
	Furniture	3	Task Chair	4	$740.25	$2,961.00		
	Specialty Equipment	4	32"x32" Refrigerator	1	$0.00	$0.00		
	Specialty Equipment	4	Computer	5	$0.00	$0.00		
	Specialty Equipment	4	Freezer	1	$0.00	$0.00		
Total	**Computational Lab**					**$12,459.36**	1	**$12,459**
5.2.1	**Lab Entry/Support**							
	Specialty Equipment	3	18"D Chemical Storage Cabinet	1	$2,000.00	$2,000.00		
Total	**Lab Entry/Support**					**$2,000.00**	1	**$2,000**
5.2.2	**Fume Hood Alcove**							
	Furniture	3	18"D Wire Shelving	1	$135.00	$135.00		
	Specialty Equipment	1	8' Fume Hood	1	$10,000.00	$0.00		
Total	**Fume Hood Alcove**					**$135.00**	1	**$135**
5.2.4	**Small Meeting Room**							
	Furniture	3	30"x60" Table	3	$1,000.00	$3,000.00		
	Furniture	3	Task Chair	12	$740.25	$8,883.00		
Total	**Small Meeting Room**					**$11,883.00**	1	**$11,883**
5.3.2	**Growth Chamber Room**							
	Specialty Equipment	4	Growth Chamber	3	$9,000.00	$0.00		
Total	**Growth Chamber Room**					**$27,000.00**	1	**$27,000**
5.3.3	**Freezer Farm - Large**							
	Specialty Equipment	3	-80C Freezer	3	$12,000.00	$36,000.00		
	Specialty Equipment	4	-80C Freezer	17	$0.00	$0.00		
	Specialty Equipment	4	Refrigerator / Freezer	1	$0.00	$0.00		
Total	**Freezer Farm - Large**					**$36,000.00**	1	**$36,000**
5.3.4	**Freezer Farm - Small**							
	Specialty Equipment	4	-80C Freezer	11	$0.00	$0.00		
Total	**Freezer Farm - Small**					**$0.00**	1	**$0**
5.3.5	**Autoclave/Ice**							
	Specialty Equipment	1	Autoclave Decontamination	1	$75,000.00	$0.00		
	Specialty Equipment	1	Autoclave Sterilizing	1	$75,000.00	$0.00		
	Specialty Equipment	3	Cart	1	$170.00	$170.00		
	Specialty Equipment	2	Dry Ice Machine	1	$3,000.00	$3,000.00		
	Specialty Equipment	2	Ice Machine	1	$1,500.00	$1,500.00		
Total	**Autoclave/Ice**					**$4,670.00**	1	**$4,670**

FF&E Cost Summary

Program #	Category	Status	Type	Unit Quantity	Unit Cost	Cost/Room	# of Rooms	Total Cost
5.3.6	**Field Equipment / Storage (Research)**							
	Furniture	3	24"D Wire Shelving	2	$160.00	$320.00		
Total	**Field Equipment / Storage (Research)**					**$640.00**	1	**$640**
5.3.7	**Common Support Room - Large**							
	Furniture	3	Lab Stool	5	$460.34	$2,301.70		
	Specialty Equipment	1	Autoclave	1	$75,000.00	$0.00		
Total	**Common Support Room - Large**					**$2,301.70**	1	**$2,302**
5.3.8	**Common Support Room - Small**							
	Furniture	3	Lab Stool	3	$460.34	$1,381.02		
Total	**Common Support Room - Small**					**$1,381.02**		
5.3.9	**BSL 2 Lab**							
	Specialty Equipment	2	6' Biosafety Cabinet	1	$14,000.00	$14,000.00		
	Specialty Equipment	4	Growth Chamber	8	$0.00	$0.00		
	Specialty Equipment	4	Mice Holding Cabinet	1	$0.00	$0.00		
Total	**BSL 2 Lab**					**$14,000.00**	1	**$14,000**
5.3.10	**Animal Holding Room**							
	Furniture	3	24"x60" Table	2	$1,000.00	$2,000.00		
	Specialty Equipment	4	Animal Holding Rack	20	$600.00	$0.00		
	Specialty Equipment	3	Glasswasher	1	$40,000.00	$40,000.00		
Total	**Animal Holding Room**					**$42,000.00**	1	**$42,000**
6.1.1	**General Biology Teaching Lab**							
	Furniture	3	Chair	1	$372.61	$372.61		
	Furniture	3	Lab Stool	24	$460.34	$11,048.16		
	Furniture	3	Movable Markerboard	2	$710.00	$1,420.00		
	Specialty Equipment	1	4' Fume Hood	1	$600.00	$0.00		
	Specialty Equipment	3	32"x32" Refrigerator	1	$8,000.00	$8,000.00		
	Specialty Equipment	3	Cart	2	$170.00	$340.00		
	Specialty Equipment	3	Growth Chamber	1	$9,000.00	$9,000.00		
Total	**General Biology Teaching Lab**					**$30,180.77**	1	**$30,181**
6.1.2	**Adv. Physiology / Behavior Teaching Lab**							
	Furniture	3	30"D Wire Shelving	4	$1,000.00	$4,000.00		
	Furniture	3	Lab Stool	24	$460.34	$11,048.16		
	Specialty Equipment	2	4' Laminar Flow Hood	1	$10,000.00	$10,000.00		
	Specialty Equipment	1	6' Fume Hood	1	$12,000.00	$0.00		
	Specialty Equipment	3	30"D Chemical Storage Cabinet	2	$2,000.00	$4,000.00		
	Specialty Equipment	3	32"x32" Refrigerator	1	$8,000.00	$8,000.00		
	Specialty Equipment	1	Snorkel Exhaust	1	$2,000.00	$0.00		
Total	**Adv. Physiology / Behavior Teaching Lab**					**$37,048.16**	1	**$37,048**
6.1.3	**Human Physiology Teaching Lab**							
	Furniture	3	Lab Stool	24	$460.34	$11,048.16		
	Specialty Equipment	3	Refrigerator/Freezer	1	$2,000.00	$2,000.00		
Total	**Human Physiology Teaching Lab**					**$13,048.16**	1	**$13,048**
6.1.4	**Microbiology Teaching Lab**							
	Furniture	3	Chair	1	$372.61	$372.61		
	Furniture	3	Lab Stool	24	$460.34	$11,048.16		
	Specialty Equipment	1	4' Fume Hood	1	$10,000.00	$0.00		
	Specialty Equipment	2	4' Laminar Flow Hood	1	$10,000.00	$10,000.00		
	Specialty Equipment	3	32"x32" Refrigerator	1	$8,000.00	$8,000.00		
	Specialty Equipment	3	Cart	2	$170.00	$340.00		
Total	**Microbiology Teaching Lab**					**$29,760.77**	1	**$29,761**
6.1.5	**Cell / Mol. Bio. / Genetics Teaching Lab**							
	Furniture	3	Chair	1	$372.61	$372.61		
	Furniture	3	Lab Stool	24	$460.34	$11,048.16		
	Furniture	3	Movable Markerboard	2	$710.00	$1,420.00		
	Specialty Equipment	1	4' Fume Hood	1	$10,000.00	$0.00		
	Specialty Equipment	3	32"x32" Refrigerator	1	$8,000.00	$8,000.00		
	Specialty Equipment	3	Freezer	1	$2,000.00	$2,000.00		
	Specialty Equipment	3	Growth Chamber	1	$9,000.00	$9,000.00		
Total	**Cell / Mol. Bio. / Genetics Teaching Lab**					**$31,840.77**	1	**$31,841**
6.1.6	**Public Health Teaching Lab**							
	Furniture	3	30"D Wire Shelving	10	$1,000.00	$10,000.00		
	Furniture	3	Chair	24	$372.61	$8,947.64		
	Specialty Equipment	1	4' Fume Hood	1	$1,000.00	$0.00		
	Specialty Equipment	3	18"D Chemical Storage Cabinet 4'	1	$2,000.00	$2,000.00		
	Specialty Equipment	1	Snorkel Exhaust	1	$2,000.00	$0.00		
Total	**Public Health Teaching Lab**					**$20,947.64**	1	**$20,948**
6.1.7	**Plant / Insect Collections Teaching Lab**							
	Furniture	3	Chair	1	$372.61	$372.61		
	Furniture	3	Lab Stool	24	$460.34	$11,048.16		
	Specialty Equipment	3	32"x32" Refrigerator	1	$8,000.00	$8,000.00		
Total	**Plant / Insect Collections Teaching Lab**					**$19,420.77**	1	**$19,421**

FF&E Cost Summary

Program #	Category	Status	Type	Unit Quantity	Unit Cost	Cost/Room	# of Rooms	Total Cost
6.1.8	Vertebrate / Zoology Collections Teaching Lab							
	Furniture	3	Chair	1	$372.61	$372.61		
	Furniture	3	Lab Stool	24	$460.34	$11,048.16		
	Specialty Equipment	3	Cart	2	$170.00	$340.00		
	Specialty Equipment	1	Snorkel Exhaust	4	$2,000.00	$0.00		
Total	Vertebrate / Zoology Collections Teaching Lab					$11,760.77	1	$11,761
6.1.9	Cadaver Lab							
	Furniture	3	24"x24" Table	2	$900.00	$1,800.00		
	Furniture	3	24"x48" Table	7	$1,100.00	$7,700.00		
	Furniture	4	30"x78" Cadaver Table - EXISTING	7	$0.00	$0.00		
	Furniture	3	30"x78" Cadaver Table - NEW	1	$8,000.00	$8,000.00		
Total	Cadaver Lab					$17,500.00	1	$17,500
6.1.10	Human Anatomy Lab							
	Furniture	3	30"x60" Table	1	$1,200.00	$1,200.00		
	Furniture	3	Chair	24	$372.61	$8,942.64		
Total	Human Anatomy Lab					$10,142.64	1	$10,143
6.1.11	Ecology Teaching Lab							
	Furniture	3	Chair	24	$372.61	$8,942.64		
	Furniture	3	Movable Markerboard	6	$710.00	$4,260.00		
	Specialty Equipment	1	4' Fume Hood	1	$10,000.00	$0.00		
	Specialty Equipment	4	Computer	12	$0.00	$0.00		
	Specialty Equipment	3	Drying Oven	1	$1,200.00	$1,200.00		
	Specialty Equipment	3	Incubator	1	$1,000.00	$1,000.00		
	Specialty Equipment	3	Refrigerator/Freezer	1	$2,000.00	$2,000.00		
	Specialty Equipment	1	Snorkel Exhaust	1	$2,000.00	$0.00		
Total	Ecology Teaching Lab					$17,402.64	1	$17,403
6.1.12	Hydrology Teaching Lab							
	Furniture	3	Chair	24	$372.61	$8,942.64		
	Specialty Equipment	4	Computer	24	$0.00	$0.00		
	Specialty Equipment	3	Oil Storage Barrel	30	$70.00	$2,100.00		
	Specialty Equipment	3	Rotap Sieve Shaker	1	$3,000.00	$3,000.00		
Total	Hydrology Teaching Lab					$14,042.64	1	$14,043
6.1.13	GIS Teaching Lab - OPT A							
	Furniture	3	24"x60" Table	2	$1,000.00	$2,000.00		
	Furniture	3	32"x78" Table w/ Descending Monitor Arm	32	$780.00	$24,960.00		
	Furniture	3	Chair	64	$372.61	$23,847.04		
	Specialty Equipment	4	Computer	64	$0.00	$0.00		
Total	GIS Teaching Lab - OPT A					$50,807.04	1	

FF&E Cost Summary

Program #	Category	Status	Type	Unit Quantity	Unit Cost	Cost/Room	# of Rooms	Total Cost
6.1.13	GIS Teaching Lab - OPT B							
	Furniture	3	24"x60" Table	2	$1,000.00	$2,000.00		
	Furniture	3	Mediascape Table w/ Monitor	10	$8,500.00	$85,000.00		
	Furniture	3	Task Chair	60	$372.61	$22,356.60		
Total	GIS Teaching Lab - OPT B					$109,356.60	1	$109,357
6.2.1	General Bio Lab Prep							
	Specialty Equipment	1	5' Fume Hood	1	$11,000.00	$0.00		
	Specialty Equipment	3	32"x32" Refrigerator	2	$8,000.00	$16,000.00		
	Specialty Equipment	1	Autoclave AMSCO 450 LS	1	$0.00	$0.00		
	Specialty Equipment	3	Cart	3	$170.00	$510.00		
	Specialty Equipment	1	Dishwasher	1	$0.00	$0.00		
	Specialty Equipment	3	Growth Chamber	3	$9,000.00	$27,000.00		
Total	General Bio Lab Prep					$43,510.00	1	$43,510
6.2.2	Microbiology Prep / Media Prep							
	Furniture	3	Task Chair	2	$740.25	$1,480.50		
	Specialty Equipment	3	5' Double Door Refrigerator	1	$7,000.00	$7,000.00		
	Specialty Equipment	1	5' Fume Hood, no cup sink	1	$0.00	$0.00		
	Specialty Equipment	3	32"x32" Refrigerator	1	$8,000.00	$8,000.00		
	Specialty Equipment	1	Autoclave	2	$0.00	$0.00		
	Specialty Equipment	3	Cart	5	$170.00	$850.00		
	Specialty Equipment	4	Computer	2	$0.00	$0.00		
	Specialty Equipment	1	Dishwasher	1	$0.00	$0.00		
	Specialty Equipment	3	Stacking Incubator	1	$20,000.00	$20,000.00		
	Specialty Equipment	3	Undercounter Freezer	1	$2,700.00	$2,700.00		
Total	Microbiology Prep / Media Prep					$39,530.50	1	$39,531
6.2.3	Microbiology Media Prep Storage							
	Furniture	3	24"D Wire Shelving	13	$160.00	$2,080.00		
	Specialty Equipment	3	18"D Chemical Storage Cabinet, 36"W	2	$2,000.00	$4,000.00		
Total	Microbiology Media Prep Storage					$6,080.00	1	$6,080
6.2.4	Microbiology - Cold Room							
	Furniture	3	24"D Wire Shelving	4	$160.00	$640.00		
Total	Microbiology - Cold Room					$640.00	1	$640
6.2.5	Cell / Molecular Biology / Genetics Prep							
	Specialty Equipment	1	5' Fume Hood	1	$11,000.00	$0.00		
	Specialty Equipment	2	6' Laminar Flow Hood	1	$10,000.00	$10,000.00		
	Specialty Equipment	3	Freezer	1	$2,000.00	$2,000.00		
Total	Cell / Molecular Biology / Genetics Prep					$12,000.00	1	$12,000
6.2.6	Human Physiology - Shared Cold Room							
	Furniture	3	24"D Wire Shelving	4	$160.00	$640.00		
Total	Human Physiology - Shared Cold Room					$640.00	1	$640
6.2.8	Field Equipment Storage (Teaching)							
	Furniture	3	24"D Wire Shelving	3	$160.00	$480.00		
Total	Field Equipment Storage (Teaching)					$480.00	1	$480
6.2.9	General Equipment Storage							
	Furniture	3	24"D Wire Shelving	3	$160.00	$480.00		
Total	General Equipment Storage					$480.00	1	$480
6.3.1	Dry Lab (24 student)							
	Furniture	3	24"x60" Table	12	$1,200.00	$14,400.00		
	Furniture	3	30"x60" Table	2	$1,200.00	$2,400.00		
	Furniture	3	Chair	24	$372.61	$8,942.64		
Total	Dry Lab (24 student)					$25,742.64	1	$25,743
7.1.2	Active Learning Classroom							
	Furniture	3	24" Fixed Table w/ Modesty Panel- 25 LF	4	$4,113.00	$16,452.00		
	Furniture	3	24"x60" Classroom Table	35	$601.00	$21,035.00		
	Furniture	3	Chair	110	$372.61	$40,987.10		
	Furniture	3	Lectern	1	$336.88	$336.88		
Total	Active Learning Classroom					$78,810.98	1	$78,811
8.1.1	Herbarium Collection - Compacted							
	Furniture	3	Compact Shelving System 14'	1	$127,900.00	$127,900.00		
	Furniture	3	Compact Shelving System 25'	1	$261,700.00	$261,700.00		
Total	Herbarium Collection - Compacted					$389,600.00	1	$389,600
8.1.2	Herbarium Reception							
	Furniture	3	24"x60" Simple Table	1	$350.65	$350.65		
	Furniture	4	Display Cabinets- By Owner	1	$0.00	$0.00		
	Furniture	3	Task Chair	1	$740.25	$740.25		
	Furniture	3	Trash/Recycle Bin	2	$6.00	$12.00		
	Specialty Equipment	4	Office Computer	1		$0.00		
Total	Herbarium Reception					$1,102.90	1	$1,103

FF&E Cost Summary

Program #	Category	Status	Type	Unit Quantity	Unit Cost	Cost/Room	# of Rooms	Total Cost
8.1.3	Herbarium Lab - Sample Processing							
	Furniture	3	Lab Stool	1	$460.34	$460.34		
	Specialty Equipment	4	20.5 cuft. Freezer	1	$0.00	$0.00		
Total	Herbarium Lab - Sample Processing					$460.34	1	$460
8.1.4	Herbarium Lab - Imaging							
	Furniture	3	Lab Stool	2	$460.34	$920.68		
	Specialty Equipment	4	Imaging Unit	2	$0.00	$0.00		
Total	Herbarium Lab - Imaging					$1,800.68	1	$1,601
8.1.5	Herbarium Lab - Database Workstations							
	Furniture	3	12" Deep Wall Mounted Shelves	2	$290.00	$580.00		
	Furniture	3	18"x30" Specimen Cabinet	1		$0.00		
	Furniture	3	Lab Cart	5	$170.00	$850.00		
	Furniture	3	Lab Chair	4	$321.97	$1,287.88		
	Specialty Equipment	4	Office Computer	4		$0.00		
Total	Herbarium Lab - Database Workstations					$2,717.88	1	$2,718
8.1.6	Herbarium Office							
	Furniture	3	18"x30" Table	1	$293.67	$293.67		
	Furniture	3	34"x12" Bookcase	3	$362.95	$1,088.85		
	Furniture	3	36"x72" Work Table	1	$718.96	$718.96		
	Furniture	3	Guest Chair	1	$203.04	$203.04		
	Furniture	3	Pedestal File Cabinet	2	$293.67	$587.34		
	Furniture	3	Task Chair	1	$740.25	$740.25		
	Specialty Equipment	4	Office Computer	1		$0.00		
Total	Herbarium Office					$3,632.11	1	$3,632
8.2.1	USDA Bee Collection - Lab							
	Furniture	3	Chair	20	$372.61	$7,452.20		
	Furniture	3	File Cabinet	12	$293.67	$3,524.04		
	Specialty Equipment	1	Blackout Curtain	1	$500.00	$0.00		
	Specialty Equipment	3	Compact Shelving Row, 17'	12	$7,955.00	$95,460.00		
	Specialty Equipment	4	Computer	3	$0.00	$0.00		
	Specialty Equipment	3	Freezer	1	$2,000.00	$2,000.00		
	Specialty Equipment	4	Microscope	1	$0.00	$0.00		
	Specialty Equipment	4	Super Bee Computer	1	$0.00	$0.00		
Total	USDA Bee Collection - Lab					$108,436.24	1	$108,436
8.3.1	USU Insect Collection							
	Furniture	3	30" Worksurface- 10 LF	1	$2,200.00	$2,200.00		
	Furniture	3	Chair	13	$372.61	$4,843.93		
	Furniture	3	File Cabinet, 4 Drawer - 15"x18"	15	$350.00	$5,250.00		
	Specialty Equipment	3	32"x32" Refrigerator	2	$8,000.00	$16,000.00		
	Specialty Equipment	3	Compact Shelving Row, 15'	5	$6,540.00	$32,700.00		
	Specialty Equipment	3	Compact Shelving Row, 18'-8"	17	$6,540.00	$111,180.00		
	Specialty Equipment	4	Computer	3	$0.00	$0.00		
Total	USU Insect Collection					$172,173.93	1	$172,174
8.4.1	Vertebrate Collection							
	Furniture	3	60" Worktable- 19 LF	1	$4,300.00	$4,300.00		
	Furniture	3	Compacted Shelving- 12" shelves back-to-back	5	$6,540.00	$32,700.00		
	Furniture	3	Compacted Shelving- 24" shelves back-to-back	8	$6,540.00	$52,320.00		
	Furniture	3	Lab Chair	10	$321.97	$3,219.70		
	Furniture	1	Vented Specimen Cabinet- 18 LF	1	$4,300.00	$0.00		
	Specialty Equipment	1	6' Fume Hood	1	$12,000.00	$0.00		
	Specialty Equipment	4	70" Flat Panel Monitor, Wall mounted	1		$0.00		
	Specialty Equipment	1	Lab Snorkel	3	$2,000.00	$0.00		
	Specialty Equipment	3	Refrigerator/ Freezer	1	$0.00	$0.00		
Total	Vertebrate Collection					$92,539.70	1	$92,540
9.1.5	Vending							
	Furniture	3	50 gal Trash / Recycle Bin	2	$80.00	$160.00		
	Specialty Equipment	4	Vending Machine	3	$0.00	$0.00		
Total	Vending					$160.00	1	$160
9.2.1	Attic Stock Storage							
	Furniture	3	24"x48" Metal Gorilla Shelves	5	$160.00	$800.00		
Total	Attic Stock Storage					$800.00	1	$800
9.2.2	Snow Equipment Storage							
	Furniture	3	18"x36" Metal Gorilla Shelves	2	$135.00	$270.00		
Total	Snow Equipment Storage					$270.00	1	$270
9.3.9	Cylinder Storage							
	Specialty Equipment	1	Rack Frame 30 H x 30 D	4	$2,000.00	$0.00		
Total	Cylinder Storage					$8,000.00	1	$8,000
TOTAL - FF&E (less IT/AV equipment)								$2,701,789

APPENDICES

6.1 Alternative Solutions

At a Steering Committee meeting in December, 2015, the design team presented two schemes for review – titled "Separated Scheme A" and "Separated Scheme B". Both schemes had the underlying premise that the BNR and new building would function as separate facilities with no physical connection between the two. The program and distribution of spaces in the new building was similar in both schemes. Scheme A proposed a major addition to BNR on the west side and minimal renovation work in the existing building in order to meet the full program needs. Scheme B proposed a comprehensive renovation of the BNR north wing to meet the program. Both schemes left a component of program space remaining in portions of BNR in un-renovated space due to budget constraints.

After review and discussion of the schemes, USU stated that Scheme B met the spirit and intent of the legislative request as it provided for renovation of at least a portion of the BNR, and directed the design team to proceed with development of the concept based on Scheme B.

Separated Scheme - A

NEW CONSTRUCTION: 138,500 GSF RENOVATION: 21,400 GSF

BNR – NEW ADDITION

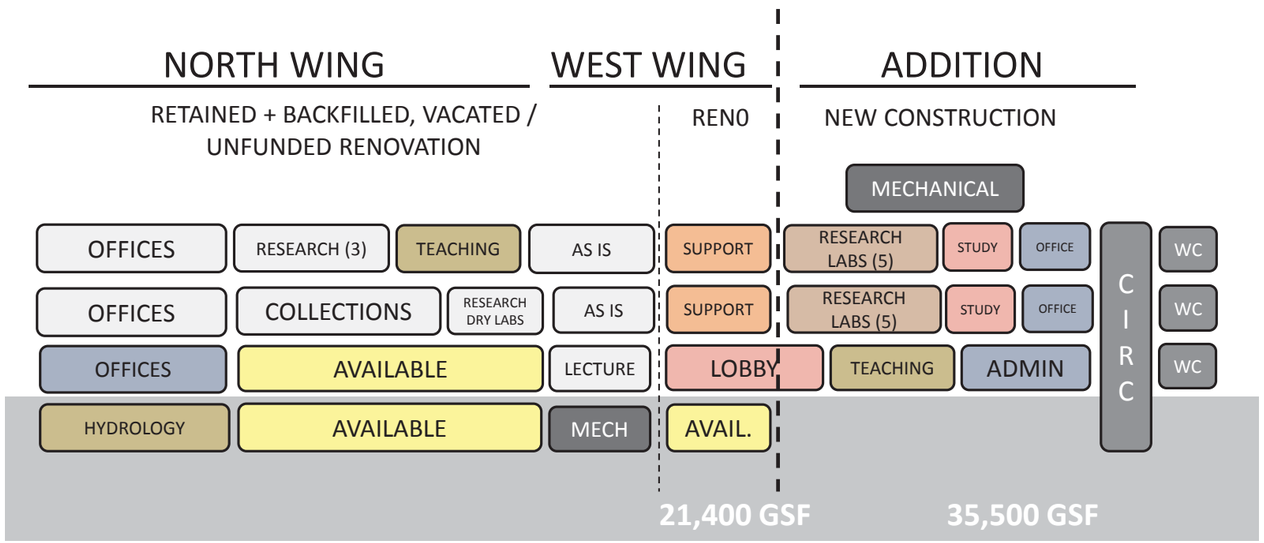

NEW BIOLOGICAL SCIENCES BUILDING

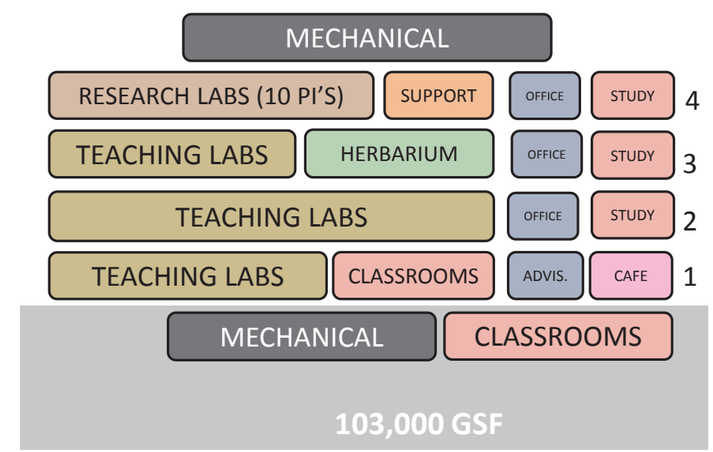

$30.6 M PROJECT COST

ADDITION AND RENOVATION
TO WEST WING OF BNR

$42.7 M PROJECT COST

NEW CONSTRUCTION

REQUESTED PROGRAM:	96,000 NSF
PROGRAM BUILT NEW:	73,400 NSF
PROGRAM RENOVATED:	5,000 NSF
PROGRAM NOT RENOVATED	17,600 NSF
SPACE MADE AVAILABLE IN BNR:	21,460 NSF

$73.3 M TOTAL PROJECT COST

CRSA PAYETTE

Concept Plans – Separated Scheme A

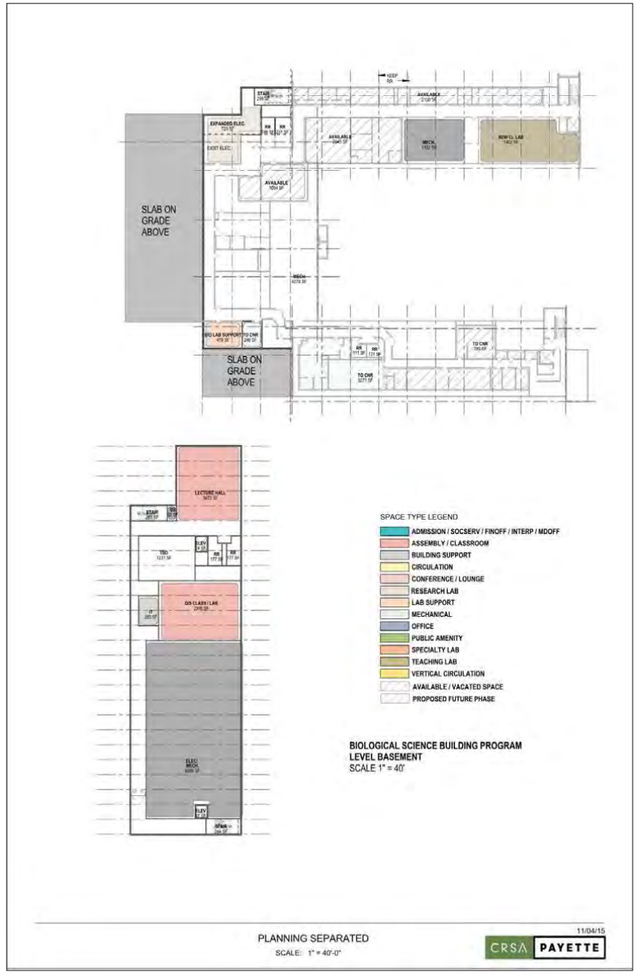

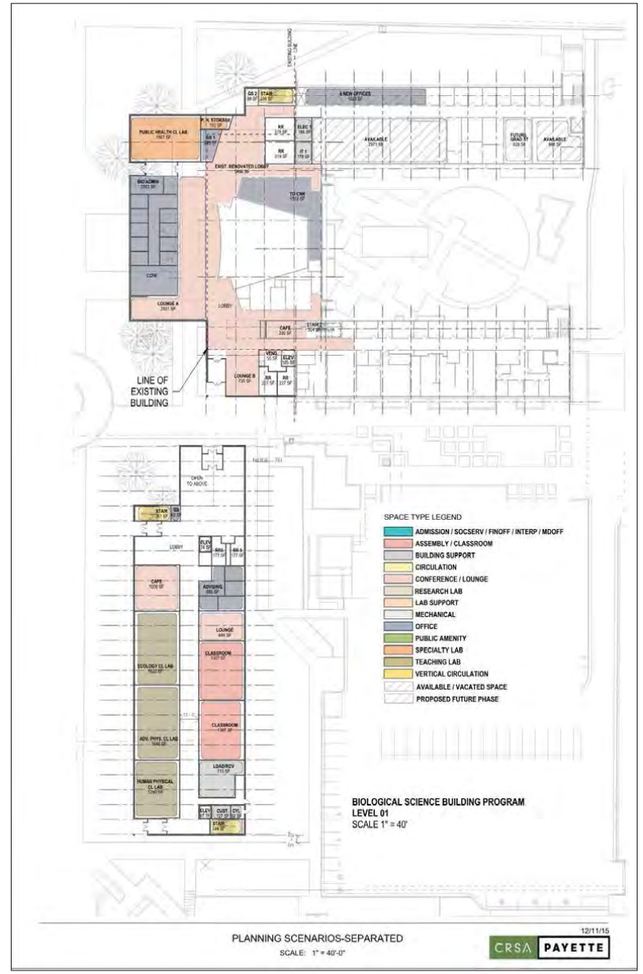

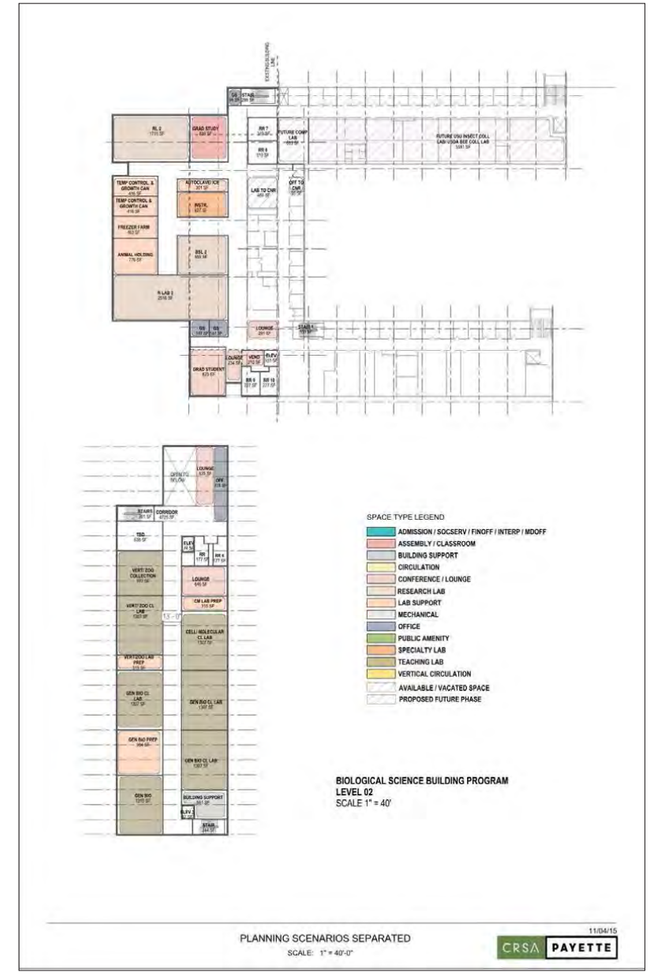

Concept Plans – Separated Scheme A

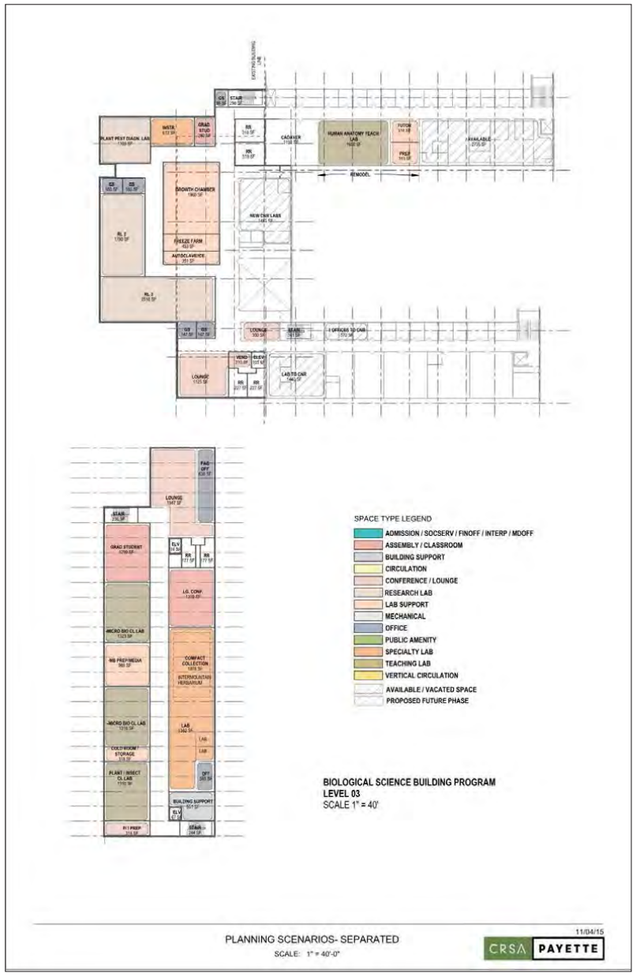

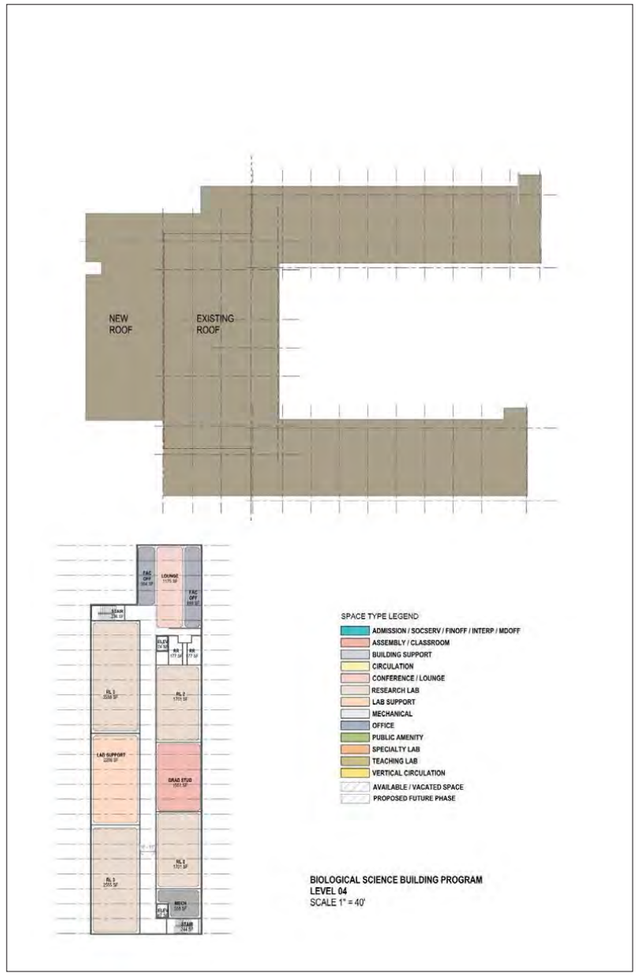

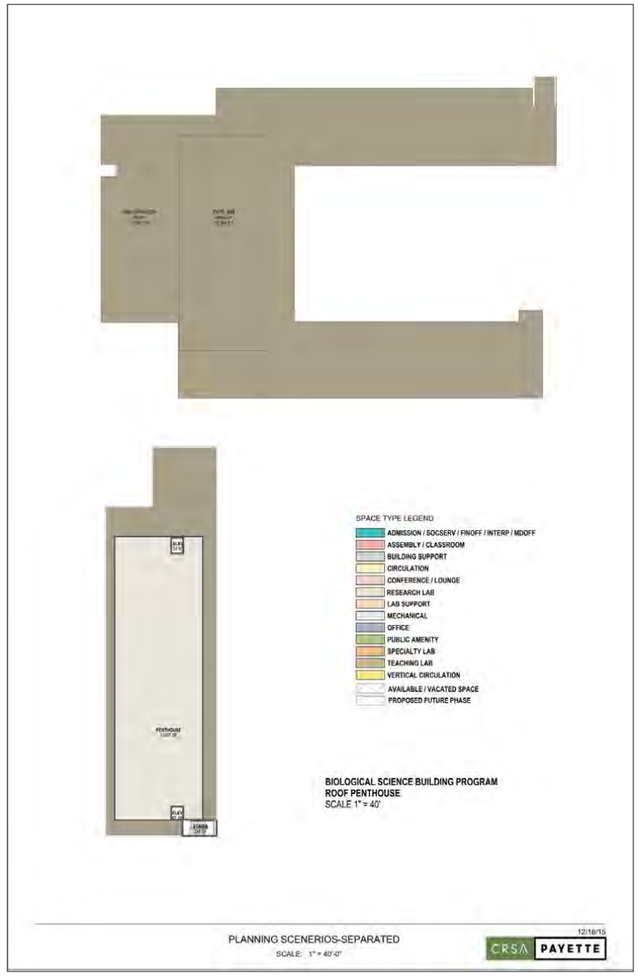

Separated Scheme - A

NEW CONSTRUCTION: 138,500 GSF RENOVATION: 21,400 GSF

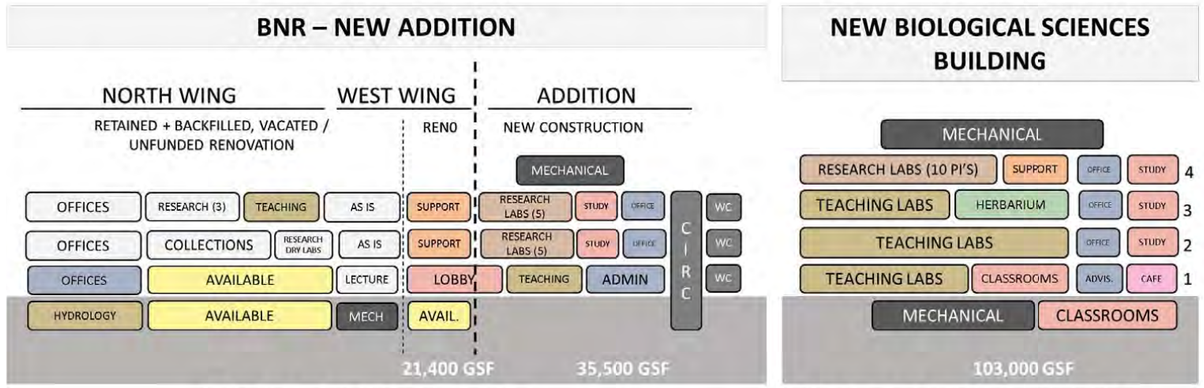

$30.6 M PROJECT COST

ADDITION AND RENOVATION TO WEST WING OF BNR

$42.7 M PROJECT COST

NEW CONSTRUCTION

$73.3 M TOTAL PROJECT COST

SUMMARY:

- New BSB and BNR have a balance of Research + Teaching Labs
- Uses BNR budget allocation to create and addition to the West Wing of BNR + add life safety and code improvements
- West Wing : seismic/ structural upgrade / MEP/ ADA toilets/ enclosed stair / renovated corridors + program spaces

PROS:

- Researchers move only once
- Buildings have greater presence on main north-south walk
- Additional BNR lobby and collaboration space
- New enclosed egress stairs at BNR
- New ADA accessible and appropriately sized restrooms at BNR
- Allows for CNR lab and office growth (no renovation cost included)
- Saving large existing trees
- East-west pedestrian walk remains as is
- BNR west wing will receive a full seismic upgrade
- Any vacated areas within BNR can be re-allocated to new uses
- Biology will vacate all space currently used in VSB and Junction Buildings

CONS:

- No connection between New BSB and BNR
- Temporary shutdown of BNR 102 (300-seat lecture hall) during construction
- BNR north and south wings will not receive upgrades (no seismic, interior finishes/lighting, exterior skin, mechanical, or electrical upgrades)
- Requested program not renovated or deferred to later funding cycles: 3 research labs, Computational Lab, USU Insect Collection, USDA Bee Collection, offices in North Wing of BNR

Separated Scheme - B

NEW CONSTRUCTION: 112,500 GSF RENOVATION: 45,400 GSF

BNR – RENOVATION / ADDITION

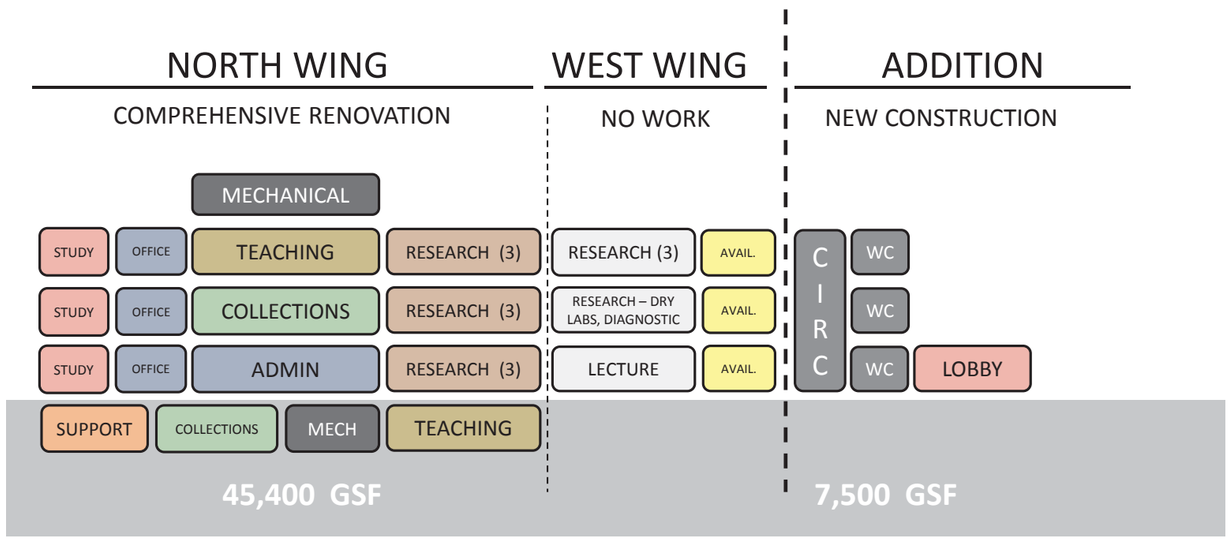

NEW BIOLOGICAL SCIENCES BUILDING

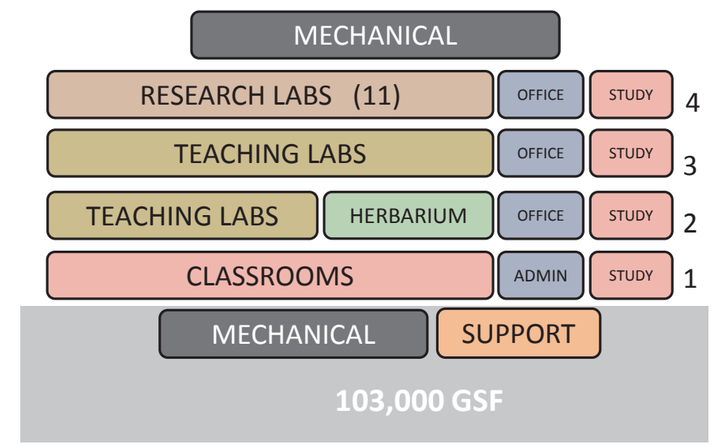

$26.8 M PROJECT COST*

LOBBY ADDITION +
RENOVATION TO NORTH WING OF BNR

REQUESTED PROGRAM:	96,000 NSF
PROGRAM BUILT NEW:	57,100 NSF
PROGRAM RENOVATED:	34,300 NSF
PROGRAM NOT RENOVATED	4,550 NSF
SPACE MADE AVAILABLE IN BNR:	10,350 NSF

$42.7 M PROJECT COST*

NEW CONSTRUCTION

*costs need to be vetted by estimator

$69.5 M TOTAL PROJECT COST

CRSA PAYETTE

Concept Plans – Separated Scheme B

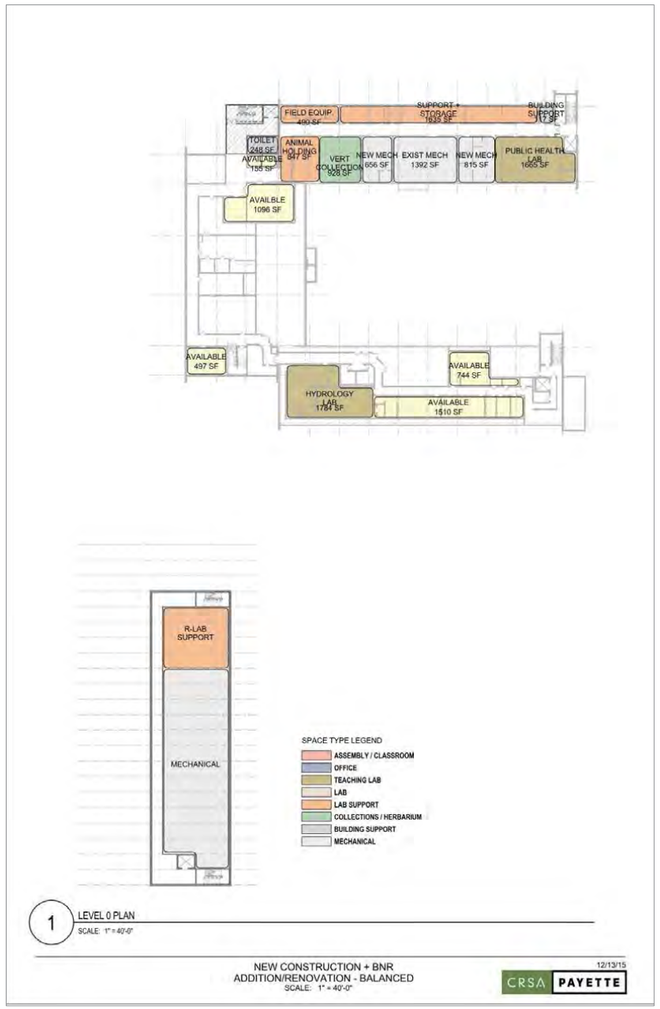

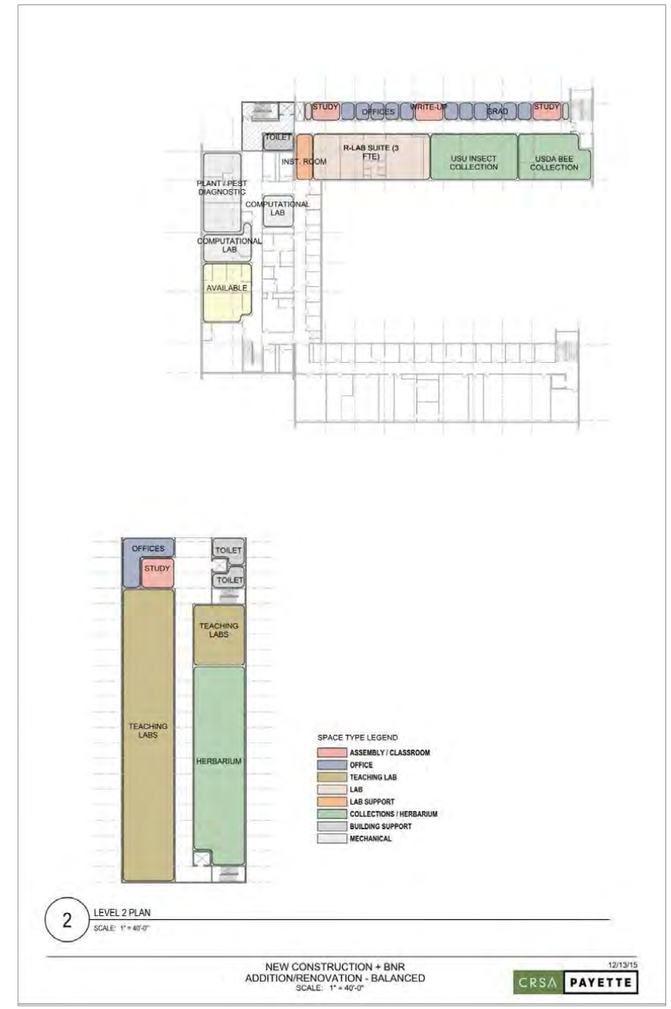

Concept Plans – Separated Scheme B

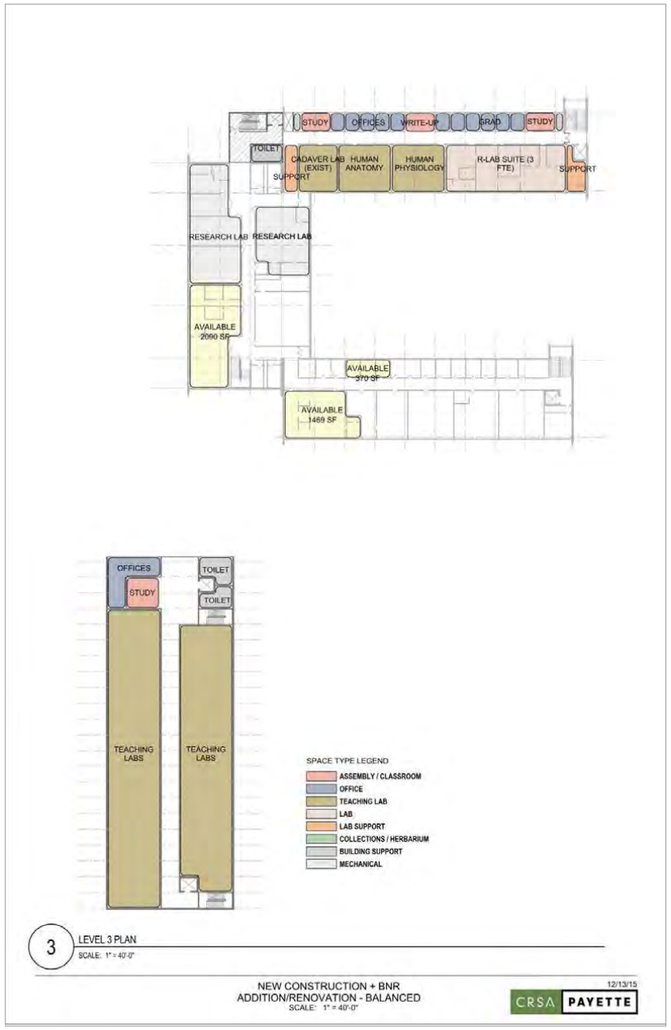

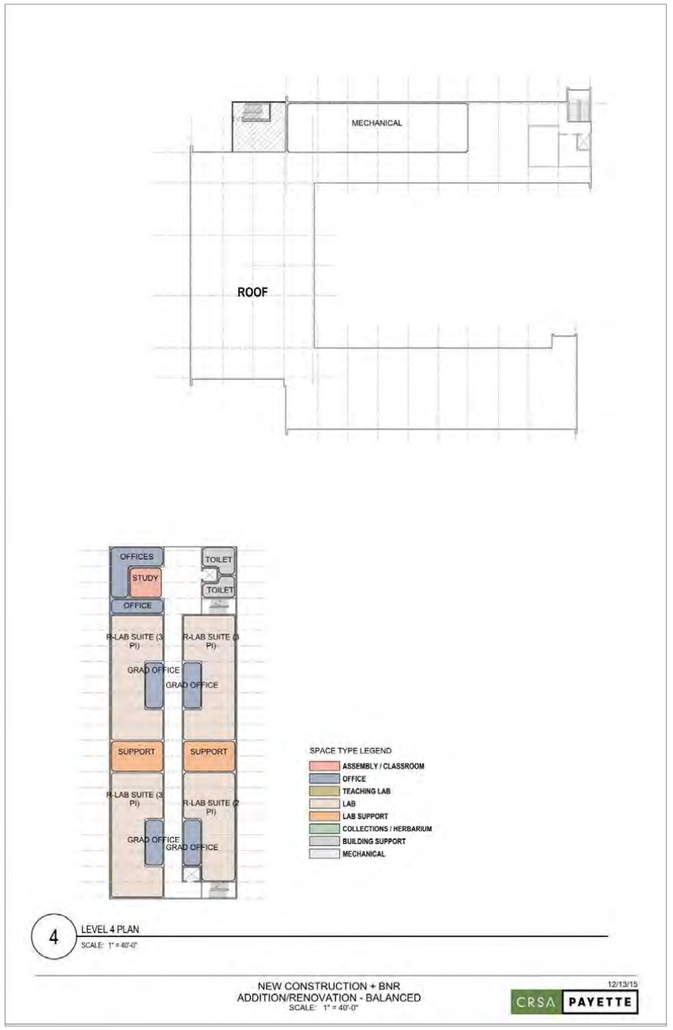

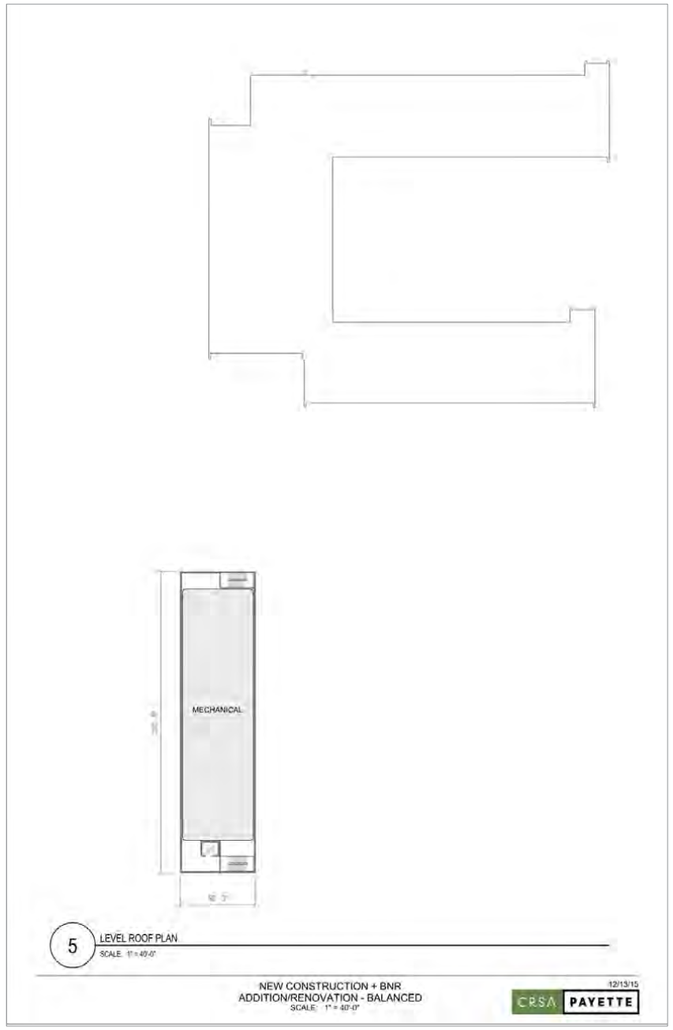

Separated Scheme - B

NEW CONSTRUCTION: 112,500 GSF RENOVATION: 45,400 GSF

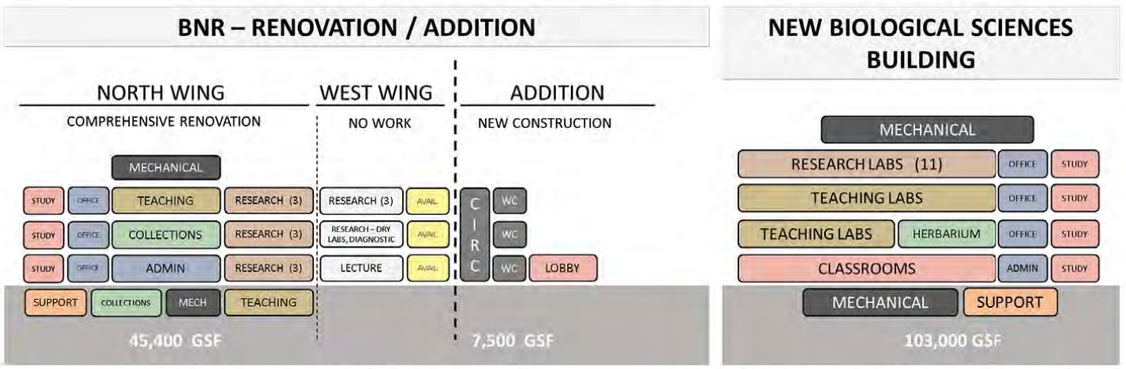

$26.8 M PROJECT COST*

LOBBY ADDITION +
RENOVATION TO NORTH WING OF BNR

$42.7 M PROJECT COST*

NEW CONSTRUCTION

$69.5 M TOTAL PROJECT COST

SUMMARY:

- New BSB and BNR have a balance of Research + Teaching Labs
- Uses BNR budget allocation to upgrade entire North Wing of BNR + add life safety and code improvements
    - North Wing : seismic/ structural upgrade / MEP/ ADA toilets/ enclosed stair / renovated corridors + program spaces
    - West Wing Addition: new lobby space/ new stair tower/new passenger elevator (stretcher)/ADA compliant restrooms

PROS:

- Meets USU stated objectives for New BSB + BNR remodel
- Begins upgrade of BNR (+/- 40% of its space) to modern standards
- Nearly all of program accommodated
- Balances Research Lab allocation: half in New BSB, half in BNR
- Faculty and Graduate Offices located near associated Research Labs
- New lobby/breakout space for RM 102
- RM 102 can remain in continuous use
- Improved image of BNR to campus
- Preserves large existing trees
- Any vacated areas within BNR can be re-allocated to new uses
- Biology will vacate all space currently used in VSB and Junction Buildings

CONS:

- No connection between New BSB and BNR
- BNR south and west wings will not receive upgrades (no seismic, interior finishes/lighting, exterior skin, mechanical, or electrical upgrades)
- Requested program not renovated or deferred to later funding cycles: 3 research labs, Computational Lab, Plant/Pest Lab

17 December 2015

CRSA PAYETTE

6.2 Equipment Inventory

The following chart is a sample equipment list for a start-up research lab at USU, based on information provided by the Biology department for a new faculty recruit. The assumption of this report is that the equivalent of one research lab suite (3 research faculty) will be outfitted as start-up space upon initial building occupancy. Once a researcher is established at the university, additional equipment for his/her lab is generally acquired through research grants. The lists included after the start-up equipment list are inventories of existing lab equipment for individual research labs, as provided by a number of the current faculty members. Specific locations within each lab space for major equipment items will be determined in subsequent design phases.

Type	Item	Item Number	Number	Unit	$ Per Unit	subtotal	section total	Description
Theory/ Computational and related hardware							**14500**	
	Desktop for Researcher			1	3000	3000		
	Lab computers for running simulations and data entry			2	2000	4000		
	Server, data storage			1	5000	5000		Allows remote file access, simulation runs, data storage
	Printer			1	500	500		
	Software	microsoft, adobe, mathematica, etc		1	2000	2000		
Establishing field sites and gathering pilot data for a grant							**16900**	
Materials and Supplies (<$5000)							**16900**	
	GPS	GPSMAP 64S		1	300	300		
	Clinometer/compass	Suunto 31192		2	200	400		Measuring tree heights, angles accurately
	Soil sampler	FS 77636		1	100	100		Sampling soil texture, horizons etc…
	Line quantum sensor + data logger	LiCOR		1	4500	4500		Leaf area by light extinction
	Data logger	Cambell Scientific CR200X		2	500	1000		Environmental sensor
	TDR probes	Thermo scientific or Campell Scienti		1	5000	5000		Environmental sensor
	Binoculars			2	200	400		
	Portable printer for field			1	200	200		
	Misc field equipment: DBH tape, Flagging, safety ve	Forestry Suppliers		1	5000	5000		Site setup and preliminary experimental treatment
Sample processing in the lab							**190810**	
Materials and Supplies (<$5000)							**60310**	
	Drying oven			1	1000	1000		Drying biomass to standard weight
	Micro balance	Fisher 01-910-244		1	4500	4500		Weighing chemicals, biomass
	Bulk balance	Fisher 01-910-249		1	2500	2500		Weighing biomass, soil
	Field balance			1	1500	1500		Weighing samples, biomass, soil
	Micro filters			1	400	400		Nutrient analysis
	Filter paper			1	200	200		Chemical analysis
	Glassware			1	6000	6000		set, sample preparation
	Storage racks, boxes for -80C freezer			1	6000	6000		
	grinder	Wig-L-Bug		1	1000	1000		
	Solvents			3 year	4000	12000		
	Ballmilll; retsch	Retsch		1	3000	3000		pulverizing leaves
	Grinding jars	containers for Ballmill		2	2000	4000		
	Polytron with spare generator			1	5000	5000		
	Water bath			1	1000	1000		
	Utility Cart			1	160	160		
	Gas burners for sterilization			2	125	250		
	Culturing materials (plates, tubes, media)			3 year	1000	3000		
	Culturing materials (fine forceps, loops needles)			1	1000	1000		
	Hotplate and stirrer			1	2800	2800		
	Pipettes			1	5000	5000		set, sample preparation
Equipment (>$5000)							**130500**	
	Leaf area meter	LI-3100C		1	10000	10000		Measuring leaf area of collected leaves (works well with crinkly leaves
	Dissecting microscope			1	5000	5000		Measuring leaf traits
	Freezer (-20C)			1	2000	2000		storing samples
	Refrigerator			1	1000	1000		keeping biomass fresh before species sorting
	Refrigerator for cultures (two-door; 4C)			1	7000	7000		
	Incubator (bench-top)			1	1500	1500		
	Laminar Flow Hood (Biosafety, Class 1B)			1	10000	10000		
	Growth Chambers	Percival or Conviron		2	20000	40000		
	Rotary Evaporator	VWR		1	5000	5000		
	Speedvac	Labconco		1	5000	5000		
	Vacuum pump	Labconco		1	5000	5000		
	Vapor Condensor	Labconco		1	5000	5000		
	Water purification system			1	10000	10000		
	Environmental shaker/ incubator			1	8000	8000		
	Centrifuge			1	6000	6000		
	Freezer (-80C) (upright; 13 cu ft)			1	10000	10000		
Shared/Available Equipment?							**0**	
	Freeze Dryer			1	0	0		
	Autoclave			1	0	0		
	Fume hood			1	0	0		part of rennovation costs or shared equipment?

PROPOSED LAB: MICROBIOLOGY TEACHING LAB (6.1.4)

Equipment Data Sheet

Date 12/9/2015

Equipment Item: freezer **Quantit** 1
User Name: Anderson
Location (lab/room #): VSB 236
Frequency and type of use weekly
(i.e. daily, weekly, monthly, yearly - teaching, research)

General Information

Manufacturer: GE
Model Number: MFU 17M38W1
Size (width" x depth" x height"): 4'x4'x6'
Weight (lbs):
Mount Location: ☑ Floor ☐ Wall ☐ Bench ☐ Ceiling
Mount Type: ☐ Fixed ☑ Movable

Mechanical Requirements

	Notes
☐ Exhaust Duct	
☐ Supply Air	
☐ Chilled Water	
☐ Steam	
☐ Other	
☐ Heat Rejection	BTUs:
☐ Alarm Points	

Plumbing Requirements

	Size	Flow	Connection Type
☐ Cold Water			
☐ Hot Water			
☐ Pure Water			
☐ Drain			
☐ Vacuum			
☐ Air			
☐ Natural Gas			
☐ Cylinder 1	Gas:		
☐ Cylinder 2	Gas:		
☐ Other			

Electrical Requirements

LOAD
Volt unk
Phase (1 or 3)
Wire (3, 4 or 5)
KVA
Amps
Watts

SOURCE
☑ Normal Only
☐ Emergency/Standby
☐ Power Quality
☐ Isolated Ground
☐ Dedicated
☐ Conditioned
☐ UPS

CONNECTION
☑ Single Point
☐ Multiple Point
☐ Explosion Proof
☐ Hard Wire
☑ Plug Configuratio 3 prong
☐ Other

Special Requirements

Photo

PROPOSED LAB: MICROBIOLOGY TEACHING LAB (6.1.4)

Equipment Data Sheet

Date 9-Dec-15

Equipment Item: Teaching microscopes **Quantit** 20-30 per
User Name: Anderson
Location (lab/room #): VSB 219, 232, and 236
Frequency and type of use Weekly
(i.e. daily, weekly, monthly, yearly - teaching, research)

General Information

Manufacturer: Olympus
Model Number: Cx22
Size (width" x depth" x height"): 16"
Weight (lbs): 8 "
Mount Location: ☐ Floor ☐ Wall ☐ Bench ☐ Ceiling
Mount Type: ☐ Fixed ☑ Movable

Mechanical Requirements

	Notes
☐ Exhaust Duct	
☐ Supply Air	
☐ Chilled Water	
☐ Steam	
☐ Other	
☐ Heat Rejection	BTUs:
☐ Alarm Points	

Plumbing Requirements

	Size	Flow	Connection Type
☐ Cold Water			
☐ Hot Water			
☐ Pure Water			
☐ Drain			
☐ Vacuum			
☐ Air			
☐ Natural Gas			
☐ Cylinder 1	Gas:		
☐ Cylinder 2	Gas:		
☐ Other			

Electrical Requirements

LOAD
Volt 6
Phase (1 or 3)
Wire (3, 4 or 5)
KVA
Amps
Wat 20

SOURCE
☑ Normal Only
☐ Emergency/Standby
☐ Power Quality
☐ Isolated Ground
☐ Dedicated
☐ Conditioned
☐ UPS

CONNECTION
☑ Single Point
☐ Multiple Point
☐ Explosion Proof
☐ Hard Wire
☑ Plug Configuratio 3 prong
☐ Other

Special Requirements

Photo

PROPOSED LAB: MICROBIOLOGY TEACHING LAB (6.1.4)

Equipment Data Sheet

Date: 12/9/2015

Equipment Item: Refrigerator **Quantit** 1
User Name: Anderson
Location (lab/room #): VSB 219
Frequency and type of use weekly
(i.e. daily, weekly, monthly, yearly - teaching, research)

General Information

Manufacturer: Frigidare
Model Number: Unk
Size (width" x depth" x height"): 4'x4'x6'
Weight (lbs): unk
Mount Location: ☑ Floor ☐ Wall ☐ Bench ☐ Ceiling
Mount Type: ☐ Fixed ☑ Movable

Mechanical Requirements

	Notes
☐ Exhaust Duct	
☐ Supply Air	
☐ Chilled Water	
☐ Steam	
☐ Other	
☐ Heat Rejection	BTUs:
☐ Alarm Points	

Plumbing Requirements

	Size	Flow	Connection Type
☐ Cold Water			
☐ Hot Water			
☐ Pure Water			
☐ Drain			
☐ Vacuum			
☐ Air			
☐ Natural Gas			
☐ Cylinder 1	Gas:		
☐ Cylinder 2	Gas:		
☐ Other			

Electrical Requirements

LOAD
Volts: unk
Phase (1 or 3):
Wire (3, 4 or 5):
KVA:
Amps:
Watts:

SOURCE
☑ Normal Only
☐ Emergency/Standby
☐ Power Quality
☐ Isolated Ground
☐ Dedicated
☐ Conditioned
☐ UPS

CONNECTION
☑ Single Point
☐ Multiple Point
☐ Explosion Proof
☐ Hard Wire
☑ Plug Configuratio 3 prong
☐ Other

Special Requirements

Photo

PROPOSED LAB SUITE: 5.1.4

Equipment Data Sheet

Date 12/7/2015

Equipment Item: SRI Gas Chromatograph **Quantit** 1
User Name: Baker Lab
Location (lab/room #): BNR 142
Frequency and type of use Weekly or more, research, supervised research (BIOL 5800), service account
(i.e. daily, weekly, monthly, yearly - teaching, research)

General Information

Manufacturer: SRI
Model Number: ###
Size (width" x depth" x height"): 36 x 36 x 12 plus computer
Weight (lbs):
Mount Location: ☐ Floor ☐ Wall ☑ Bench ☐ Ceiling
Mount Type: ☑ Fixed ☐ Movable

Mechanical Requirements

	Notes
☐ Exhaust Duct	
☑ Supply Air	3-4 tanks depending on application
☐ Chilled Water	
☐ Steam	
☐ Other	
☐ Heat Rejection	BTUs:
☐ Alarm Points	

Plumbing Requirements

	Size	Flow	Connection Type
☐ Cold Water			
☐ Hot Water			
☐ Pure Water			
☐ Drain			
☐ Vacuum			
☐ Air			
☐ Natural Gas			
☑ Cylinder 1	UHP He		
☐ Cylinder 2	UHP N2		
☐ Other	Hydrogen; CH4/Ar Tanks		

Electrical Requirements

LOAD
Volts:
Phase (1 or 3):
Wire (3, 4 or 5):
KVA:
Amps:
Watts:

SOURCE
☐ Normal Only
☐ Emergency/Standby
☐ Power Quality
☐ Isolated Ground
☐ Dedicated
☐ Conditioned
☐ UPS

CONNECTION
☐ Single Point
☐ Multiple Point
☐ Explosion Proof
☐ Hard Wire
☐ Plug Configuration
☐ Other

Special Requirements

Photo

PROPOSED LAB SUITE: 5.1.4

Equipment Data Sheet

Date 12/7/2015

Equipment Item: Shimadzu TOC analyzer **Quantit** 1
User Name: Baker Lab
Location (lab/room #): BNR 142
Frequency and type of use Weekly or more, research, supervised research (BIOL 5800), service account
(i.e. daily, weekly, monthly, yearly - teaching, research)

General Information

Manufacturer: Shimadzu TOC-L
Model Number:
Size (width" x depth" x height"): 48 x 48 x 36 plus computer
Weight (lbs):
Mount Location: ☑ Floor ☐ Wall ☐ Bench ☐ Ceiling
Mount Type: ☑ Fixed ☐ Movable

Mechanical Requirements

	Notes
☐ Exhaust Duct	
☐ Supply Air	
☐ Chilled Water	
☐ Steam	
☐ Other	
☐ Heat Rejection	BTUs:
☐ Alarm Points	

Plumbing Requirements

	Size	Flow	Connection Type
☐ Cold Water			
☐ Hot Water			
☐ Pure Water			
☑ Drain			waste reservoir - I
☐ Vacuum			
☐ Air			
☐ Natural Gas			
☑ Cylinder 1	Gas:	N2	
☐ Cylinder 2	Gas:	Zero Air	
☐ Other			

Electrical Requirements

LOAD
Volts
Phase (1 or 3)
Wire (3, 4 or 5)
KVA
Amps
Watts

SOURCE
☐ Normal Only
☐ Emergency/Standby
☐ Power Quality
☐ Isolated Ground
☐ Dedicated
☐ Conditioned
☐ UPS

CONNECTION
☐ Single Point
☐ Multiple Point
☐ Explosion Proof
☐ Hard Wire
☐ Plug Configuration
☐ Other

Special Requirements

Photo

PROPOSED LAB SUITE: 5.1.4

Equipment Data Sheet

Date 12/7/2015

Equipment Item: Ion Chromatograph **Quantit** 1
User Name: Baker Lab
Location (lab/room #): BNR 142
Frequency and type of use Weekly or more, research, supervised research (BIOL 5800), service account
(i.e. daily, weekly, monthly, yearly - teaching, research)

General Information

Manufacturer: DIONEX (ThermoFisher)
Model Number:
Size (width" x depth" x height"): 48x48x36 plus computer
Weight (lbs):
Mount Location: ☐ Floor ☐ Wall ☑ Bench ☐ Ceiling
Mount Type: ☑ Fixed ☐ Movable

Mechanical Requirements

	Notes
☐ Exhaust Duct	
☐ Supply Air	
☐ Chilled Water	
☐ Steam	
☐ Other	
☐ Heat Rejection	BTUs:
☐ Alarm Points	

Plumbing Requirements

	Size	Flow	Connection Type
☐ Cold Water			
☐ Hot Water			
☐ Pure Water			
☑ Drain			Waste vessel (Ha
☐ Vacuum			
☐ Air			
☐ Natural Gas			
☑ Cylinder 1	Gas:	N2	
☐ Cylinder 2	Gas:		
☐ Other			

Electrical Requirements

LOAD
Volts
Phase (1 or 3)
Wire (3, 4 or 5)
KVA
Amps
Watts

SOURCE
☐ Normal Only
☐ Emergency/Standby
☐ Power Quality
☐ Isolated Ground
☐ Dedicated
☐ Conditioned
☐ UPS

CONNECTION
☐ Single Point
☐ Multiple Point
☐ Explosion Proof
☐ Hard Wire
☐ Plug Configuration
☐ Other

Special Requirements

Photo

PROPOSED LAB SUITE: 5.1.4

Equipment Data Sheet

Date 12/7/2015

Equipment Item: Segemented Flow Analyzer **Quantit** 1
User Name: Baker Lab
Location (lab/room #): BNR 140
Frequency and type of use Weekly or more, research, supervised research (BIOL 5800), service account
(i.e. daily, weekly, monthly, yearly - teaching, research)

General Information

Manufacturer: Astoria Pacific
Model Number:
Size (width" x depth" x height"): 48 x 120 x 14
Weight (lbs):
Mount Location: ☐ Floor ☐ Wall ☑ Bench ☐ Ceiling
Mount Type: ☑ Fixed ☐ Movable

Mechanical Requirements

	Notes
☐ Exhaust Duct	
☐ Supply Air	
☐ Chilled Water	
☐ Steam	
☐ Other	
☐ Heat Rejection	BTUs:
☐ Alarm Points	

Plumbing Requirements

	Size	Flow	Connection Type
☐ Cold Water			
☐ Hot Water			
☐ Pure Water			
☑ Drain			Waste vessel (Ha
☐ Vacuum			
☐ Air			
☐ Natural Gas			
☑ Cylinder 1	Gas:	Access to UHP N2 needed to	
☐ Cylinder 2	Gas:		
☐ Other			

Electrical Requirements

LOAD
Volts
Phase (1 or 3)
Wire (3, 4 or 5)
KVA
Amps
Watts

SOURCE
☐ Normal Only
☐ Emergency/Standby
☐ Power Quality
☐ Isolated Ground
☐ Dedicated
☐ Conditioned
☐ UPS

CONNECTION
☐ Single Point
☐ Multiple Point
☐ Explosion Proof
☐ Hard Wire
☐ Plug Configuration
☐ Other

Special Requirements

Photo

PROPOSED LAB SUITE: 5.1.4

Equipment Data Sheet

Date 12/7/2015

Equipment Item: Aqualog scanning spectrofluorometer **Quantit** 1
User Name: Baker Lab
Location (lab/room #): BNR 140
Frequency and type of use Daily, research, supervised research (BIOL 5800), service account
(i.e. daily, weekly, monthly, yearly - teaching, research)

General Information

Manufacturer: Horiba
Model Number:
Size (width" x depth" x height"): 36x48x12 plus computer
Weight (lbs):
Mount Location: ☐ Floor ☐ Wall ☑ Bench ☐ Ceiling
Mount Type: ☑ Fixed ☐ Movable

Mechanical Requirements

	Notes
☐ Exhaust Duct	
☐ Supply Air	
☐ Chilled Water	
☐ Steam	
☐ Other	
☐ Heat Rejection	BTUs:
☐ Alarm Points	

Plumbing Requirements

	Size	Flow	Connection Type
☐ Cold Water			
☐ Hot Water			
☐ Pure Water			
☐ Drain			
☐ Vacuum			
☐ Air			
☐ Natural Gas			
☐ Cylinder 1	Gas:		
☐ Cylinder 2	Gas:		
☐ Other			

Electrical Requirements

LOAD
Volts
Phase (1 or 3)
Wire (3, 4 or 5)
KVA
Amps
Watts

SOURCE
☐ Normal Only
☐ Emergency/Standby
☐ Power Quality
☐ Isolated Ground
☐ Dedicated
☐ Conditioned
☐ UPS

CONNECTION
☐ Single Point
☐ Multiple Point
☐ Explosion Proof
☐ Hard Wire
☐ Plug Configuration
☐ Other

Special Requirements

Photo

PROPOSED LAB SUITE: 5.1.4

Equipment Data Sheet

Date 12/7/2015

Equipment Item: Muffle Furnace **Quantit** 1
User Name: Baker Lab
Location (lab/room #): BNR 140
Frequency and type of use Daily, research, supervised research (BIOL 5800), service account
(i.e. daily, weekly, monthly, yearly - teaching, research)

General Information

Manufacturer
Model Number
Size (width" x depth" x height") 36x36x48
Weight (lbs)
Mount Location ☐ Floor ☐ Wall ☑ Bench ☐ Ceiling
Mount Type ☑ Fixed ☐ Movable

Mechanical Requirements

	Notes
☑ Exhaust Duct	
☐ Supply Air	
☐ Chilled Water	
☐ Steam	
☐ Other	
☐ Heat Rejection	BTUs:
☐ Alarm Points	

Plumbing Requirements

	Size	Flow	Connection Type
☐ Cold Water			
☐ Hot Water			
☐ Pure Water			
☐ Drain			
☐ Vacuum			
☐ Air			
☐ Natural Gas			
☐ Cylinder 1	Gas:		
☐ Cylinder 2	Gas:		
☐ Other			

Electrical Requirements

LOAD
Volt: 240
Phase (1 or 3)
Wire (3, 4 or 5)
KVA
Amps
Watts

SOURCE
☐ Normal Only
☐ Emergency/Standby
☐ Power Quality
☑ Isolated Ground
☑ Dedicated
☐ Conditioned
☐ UPS

CONNECTION
☐ Single Point
☐ Multiple Point
☐ Explosion Proof
☐ Hard Wire
☐ Plug Configuration
☐ Other

Special Requirements

Photo

PROPOSED LAB SUITE: 5.1.4

Equipment Data Sheet

Date 12/7/2015

Equipment Item: Spectrophotometer **Quantit** 1
User Name: Baker Lab
Location (lab/room #): BNR 140
Frequency and type of use monthly, research, supervised research (BIOL 5800), service account
(i.e. daily, weekly, monthly, yearly - teaching, research)

General Information

Manufacturer
Model Number
Size (width" x depth" x height") 14x24x8
Weight (lbs)
Mount Location ☐ Floor ☐ Wall ☑ Bench ☐ Ceiling
Mount Type ☐ Fixed ☐ Movable

Mechanical Requirements

	Notes
☐ Exhaust Duct	
☐ Supply Air	
☐ Chilled Water	
☐ Steam	
☐ Other	
☐ Heat Rejection	BTUs:
☐ Alarm Points	

Plumbing Requirements

	Size	Flow	Connection Type
☐ Cold Water			
☐ Hot Water			
☐ Pure Water			
☐ Drain			
☐ Vacuum			
☐ Air			
☐ Natural Gas			
☐ Cylinder 1	Gas:		
☐ Cylinder 2	Gas:		
☐ Other			

Electrical Requirements

LOAD
Volts
Phase (1 or 3)
Wire (3, 4 or 5)
KVA
Amps
Watts

SOURCE
☐ Normal Only
☐ Emergency/Standby
☐ Power Quality
☐ Isolated Ground
☐ Dedicated
☐ Conditioned
☐ UPS

CONNECTION
☐ Single Point
☐ Multiple Point
☐ Explosion Proof
☐ Hard Wire
☐ Plug Configuration
☐ Other

Special Requirements

Photo

PROPOSED LAB SUITE: 5.1.4

Equipment Data Sheet

Date 12/7/2015

Equipment Item: Analytical Balance - 4 place **Quantit** 1
User Name: Baker Lab
Location (lab/room #): BNR 145
Frequency and type of use daily, research, supervised research (BIOL 5800), service account
(i.e. daily, weekly, monthly, yearly - teaching, research)

General Information

Manufacturer: Denver Instruments
Model Number:
Size (width" x depth" x height"): 4x4x10
Weight (lbs):
Mount Location: ☐ Floor ☐ Wall ☐ Bench ☐ Ceiling
Mount Type: ☐ Fixed ☐ Movable

Mechanical Requirements

	Notes
☐ Exhaust Duct	
☐ Supply Air	
☐ Chilled Water	
☐ Steam	
☐ Other	
☐ Heat Rejection	BTUs:
☐ Alarm Points	

Plumbing Requirements

	Size	Flow	Connection Type
☐ Cold Water			
☐ Hot Water			
☐ Pure Water			
☐ Drain			
☐ Vacuum			
☐ Air			
☐ Natural Gas			
☐ Cylinder 1	Gas:		
☐ Cylinder 2	Gas:		
☐ Other			

Electrical Requirements

LOAD
Volts
Phase (1 or 3)
Wire (3, 4 or 5)
KVA
Amps
Watts

SOURCE
☐ Normal Only
☐ Emergency/Standby
☐ Power Quality
☐ Isolated Ground
☐ Dedicated
☐ Conditioned
☐ UPS

CONNECTION
☐ Single Point
☐ Multiple Point
☐ Explosion Proof
☐ Hard Wire
☐ Plug Configuration
☐ Other

Special Requirements

Photo

PROPOSED LAB SUITE: 5.1.4

Equipment Data Sheet

Date 12/7/2015

Equipment Item: Analytical balance - 5 place **Quantit** 1
User Name: Baker Lab
Location (lab/room #): BNR 140
Frequency and type of use daily, research, supervised research (BIOL 5800), service account
(i.e. daily, weekly, monthly, yearly - teaching, research)

General Information

Manufacturer:
Model Number:
Size (width" x depth" x height"): 6x6x12 plus PC computer wi
Weight (lbs):
Mount Location: ☐ Floor ☐ Wall ☑ Bench ☐ Ceiling
Mount Type: ☐ Fixed ☐ Movable

Mechanical Requirements

	Notes
☐ Exhaust Duct	
☐ Supply Air	
☐ Chilled Water	
☐ Steam	
☐ Other	
☐ Heat Rejection	BTUs:
☐ Alarm Points	

Plumbing Requirements

	Size	Flow	Connection Type
☐ Cold Water			
☐ Hot Water			
☐ Pure Water			
☐ Drain			
☐ Vacuum			
☐ Air			
☐ Natural Gas			
☐ Cylinder 1	Gas:		
☐ Cylinder 2	Gas:		
☐ Other			

Electrical Requirements

LOAD
Volts
Phase (1 or 3)
Wire (3, 4 or 5)
KVA
Amps
Watts

SOURCE
☐ Normal Only
☐ Emergency/Standby
☐ Power Quality
☐ Isolated Ground
☐ Dedicated
☐ Conditioned
☐ UPS

CONNECTION
☐ Single Point
☐ Multiple Point
☐ Explosion Proof
☐ Hard Wire
☐ Plug Configuration
☐ Other

Special Requirements

Photo

PROPOSED LAB SUITE: 5.1.4

Equipment Data Sheet

Date 12/7/2015

Equipment Item: Water de-ionizer **Quantit** 1
User Name: Baker lab
Location (lab/room #): BNR 140
Frequency and type of use daily, research, supervised research (BIOL 5800), service account
(i.e. daily, weekly, monthly, yearly - teaching, research)

General Information

Manufacturer: Millipore
Model Number: MilliQ
Size (width" x depth" x height"): 8"x8"x14"
Weight (lbs):
Mount Location: ☐ Floor ☑ Wall ☐ Bench ☐ Ceiling
Mount Type: ☐ Fixed ☐ Movable

Mechanical Requirements

	Notes
☐ Exhaust Duct	
☐ Supply Air	
☐ Chilled Water	
☐ Steam	
☐ Other	
☐ Heat Rejection	BTUs:
☐ Alarm Points	

Plumbing Requirements

	Size	Flow	Connection Type
☐ Cold Water			
☐ Hot Water			
☑ Pure Water			
☑ Drain			
☐ Vacuum			
☐ Air			
☐ Natural Gas			
☐ Cylinder 1	Gas:		
☐ Cylinder 2	Gas:		
☐ Other			

Electrical Requirements

LOAD
Volts
Phase (1 or 3)
Wire (3, 4 or 5)
KVA
Amps
Watts

SOURCE
☐ Normal Only
☐ Emergency/Standby
☐ Power Quality
☐ Isolated Ground
☐ Dedicated
☐ Conditioned
☐ UPS

CONNECTION
☐ Single Point
☐ Multiple Point
☐ Explosion Proof
☐ Hard Wire
☐ Plug Configuration
☐ Other

Special Requirements

Photo

PROPOSED LAB SUITE: 5.1.2

Equipment Data Sheet

Date: 8-Dec-15

Equipment Item: race track **Quantit** 2
User Name: E. Brodie
Location (lab/room #): BNR 28
Frequency and type of use weekly, research & some teaching
(i.e. daily, weekly, monthly, yearly - teaching, research)

General Information

Manufacturer: custom
Model Number:
Size (width" x depth" x height"): 4meters, 0.5 m, 1
Weight (lbs): 200 lbs
Mount Location: ☑ Floor ☐ Wall ☐ Bench ☐ Ceiling
Mount Type: ☐ Fixed ☑ Movable

Mechanical Requirements

	Notes
☐ Exhaust Duct	
☐ Supply Air	
☐ Chilled Water	
☐ Steam	
☐ Other	
☐ Heat Rejection	BTUs:
☐ Alarm Points	

Plumbing Requirements

	Size	Flow	Connection Type
☐ Cold Water			
☐ Hot Water			
☐ Pure Water			
☐ Drain			
☐ Vacuum			
☐ Air			
☐ Natural Gas			
☐ Cylinder 1	Gas:		
☐ Cylinder 2	Gas:		
☐ Other			

Electrical Requirements

LOAD
Volts 115for comput
Phase (1 or 3)
Wire (3, 4 or 5)
KVA
Amps
Watts

SOURCE
☐ Normal Only
☐ Emergency/Standby
☐ Power Quality
☐ Isolated Ground
☐ Dedicated
☐ Conditioned
☐ UPS

CONNECTION
☐ Single Point
☐ Multiple Point
☐ Explosion Proof
☐ Hard Wire
☐ Plug Configuration
☐ Other

Special Requirements

Photo

PROPOSED LAB SUITE: 5.1.2

Equipment Data Sheet

Date:

Equipment Item: Ultra Low Freezer **Quantit** 2
User Name: E. Brodie
Location (lab/room #): BNR26
Frequency and type of use daily
(i.e. daily, weekly, monthly, yearly - teaching, research)

General Information

Manufacturer: Revco
Model Number:
Size (width" x depth" x height"): 120cmX90X210
Weight (lbs):
Mount Location: ☑ Floor ☐ Wall ☐ Bench ☐ Ceiling
Mount Type: ☐ Fixed ☑ Movable

Mechanical Requirements

	Notes
☐ Exhaust Duct	
☐ Supply Air	
☐ Chilled Water	
☐ Steam	
☐ Other	
☐ Heat Rejection	BTUs:
☐ Alarm Points	

Plumbing Requirements

	Size	Flow	Connection Type
☐ Cold Water			
☐ Hot Water			
☐ Pure Water			
☐ Drain			
☐ Vacuum			
☐ Air			
☐ Natural Gas			
☐ Cylinder 1	Gas:		
☐ Cylinder 2	Gas:		
☐ Other			

Electrical Requirements

LOAD
Volt: 220
Phase (1 or 3)
Wire (3, 4 or 5)
KVA
Amps
Watts

SOURCE
☐ Normal Only
☐ Emergency/Standby
☐ Power Quality
☐ Isolated Ground
☐ Dedicated
☐ Conditioned
☐ UPS

CONNECTION
☐ Single Point
☐ Multiple Point
☐ Explosion Proof
☐ Hard Wire
☐ Plug Configuration
☐ Other

Special Requirements

Photo

PROPOSED LAB SUITE: 5.1.2

Equipment Data Sheet

Date:

Equipment Item: Vacuum Oven **Quantit** 1
User Name: E. Brodie
Location (lab/room #): BNR 26
Frequency and type of use monthly
(i.e. daily, weekly, monthly, yearly - teaching, research)

General Information

Manufacturer: Napco
Model Number: 5831
Size (width" x depth" x height"): 80X40X60 cm
Weight (lbs):
Mount Location: ☐ Floor ☐ Wall ☑ Bench ☐ Ceiling
Mount Type: ☐ Fixed ☑ Movable

Mechanical Requirements

	Notes
☐ Exhaust Duct	
☐ Supply Air	
☐ Chilled Water	
☐ Steam	
☐ Other	
☐ Heat Rejection	BTUs:
☐ Alarm Points	

Plumbing Requirements

	Size	Flow	Connection Type
☐ Cold Water			
☐ Hot Water			
☐ Pure Water			
☐ Drain			
☐ Vacuum			
☐ Air			
☐ Natural Gas			
☐ Cylinder 1	Gas:		
☐ Cylinder 2	Gas:		
☐ Other			

Electrical Requirements

LOAD
Volt: 110
Phase (1 or 3)
Wire (3, 4 or 5)
KVA
Amps
Watts

SOURCE
☐ Normal Only
☐ Emergency/Standby
☐ Power Quality
☐ Isolated Ground
☐ Dedicated
☐ Conditioned
☐ UPS

CONNECTION
☐ Single Point
☐ Multiple Point
☐ Explosion Proof
☐ Hard Wire
☐ Plug Configuration
☐ Other

Special Requirements

Photo

CRSA PAYETTE

PROPOSED LAB SUITE: 5.1.2

Equipment Data Sheet

Date:

Equipment Item: refrigerators **Quantit** 2
User Name: E. Brodie
Location (lab/room #): 1 in BNR26 1 in BNR 28
Frequency and type of use daily
(i.e. daily, weekly, monthly, yearly - teaching, research)

General Information

Manufacturer
Model Number
Size (width" x depth" x height")
Weight (lbs)
Mount Location ☐ Floor ☐ Wall ☐ Bench ☐ Ceiling
Mount Type ☐ Fixed ☑ Movable

Mechanical Requirements

	Notes
☐ Exhaust Duct	
☐ Supply Air	
☐ Chilled Water	
☐ Steam	
☐ Other	
☐ Heat Rejection	BTUs:
☐ Alarm Points	

Plumbing Requirements

	Size	Flow	Connection Type
☐ Cold Water			
☐ Hot Water			
☐ Pure Water			
☐ Drain			
☐ Vacuum			
☐ Air			
☐ Natural Gas			
☐ Cylinder 1	Gas:		
☐ Cylinder 2	Gas:		
☐ Other			

Electrical Requirements

LOAD
Volt: 110
Phase (1 or 3)
Wire (3, 4 or 5)
KVA
Amps
Watts

SOURCE
☐ Normal Only
☐ Emergency/Standby
☐ Power Quality
☐ Isolated Ground
☐ Dedicated
☐ Conditioned
☐ UPS

CONNECTION
☐ Single Point
☐ Multiple Point
☐ Explosion Proof
☐ Hard Wire
☐ Plug Configuration
☐ Other

Special Requirements

Photo

PROPOSED LAB SUITE: 5.1.2

Equipment Data Sheet

Date:

Equipment Item: microscope **Quantit** 1
User Name: E. Brodie
Location (lab/room #): BNR 32
Frequency and type of use weekly
(i.e. daily, weekly, monthly, yearly - teaching, research)

General Information

Manufacturer Olympus
Model Number
Size (width" x depth" x height")
Weight (lbs)
Mount Location ☐ Floor ☐ Wall ☑ Bench ☐ Ceiling
Mount Type ☐ Fixed ☑ Movable

Mechanical Requirements

	Notes
☐ Exhaust Duct	
☐ Supply Air	
☐ Chilled Water	
☐ Steam	
☐ Other	
☐ Heat Rejection	BTUs:
☐ Alarm Points	

Plumbing Requirements

	Size	Flow	Connection Type
☐ Cold Water			
☐ Hot Water			
☐ Pure Water			
☐ Drain			
☐ Vacuum			
☐ Air			
☐ Natural Gas			
☐ Cylinder 1	Gas:		
☐ Cylinder 2	Gas:		
☐ Other			

Electrical Requirements

LOAD
Volt: 110
Phase (1 or 3)
Wire (3, 4 or 5)
KVA
Amps
Watts

SOURCE
☐ Normal Only
☐ Emergency/Standby
☐ Power Quality
☐ Isolated Ground
☐ Dedicated
☐ Conditioned
☐ UPS

CONNECTION
☐ Single Point
☐ Multiple Point
☐ Explosion Proof
☐ Hard Wire
☐ Plug Configuration
☐ Other

Special Requirements

Photo

PROPOSED LAB SUITE: 5.1.3

Equipment Data Sheet

Date: 28-Jan-16

Equipment Item: Refrigerator **Quantit** 1
User Name: Edward W. Evans
Location (lab/room #): BNR 234
Frequency and type of use daily - research
(i.e. daily, weekly, monthly, yearly - teaching, research)

General Information

Manufacturer: Kenmore (Sears)
Model Number: 67041
Size (width" x depth" x height"): 31 x 30 x 67
Weight (lbs):
Mount Location: ☑ Floor ☐ Wall ☐ Bench ☐ Ceiling
Mount Type: ☐ Fixed ☑ Movable

Mechanical Requirements

		Notes
☐	Exhaust Duct	
☐	Supply Air	
☐	Chilled Water	
☐	Steam	
☐	Other	
☐	Heat Rejection	BTUs:
☐	Alarm Points	

Plumbing Requirements

	Size	Flow	Connection Type
☐ Cold Water			
☐ Hot Water			
☐ Pure Water			
☐ Drain			
☐ Vacuum			
☐ Air			
☐ Natural Gas			
☐ Cylinder 1	Gas:		
☐ Cylinder 2	Gas:		
☐ Other			

Electrical Requirements

LOAD
Volts 120
Phase (1 or 3)
Wire (3, 4 or 5)
KVA
Amps
Watts

SOURCE
☑ Normal Only
☐ Emergency/Standby
☐ Power Quality
☐ Isolated Ground
☐ Dedicated
☐ Conditioned
☐ UPS

CONNECTION
☑ Single Point
☐ Multiple Point
☐ Explosion Proof
☐ Hard Wire
☐ Plug Configuration
☐ Other

Special Requirements

Photo

PROPOSED LAB SUITE: 5.1.3

Equipment Data Sheet

Date: 28-Jan-16

Equipment Item: Refrigerator **Quantit** 1
User Name: Edward W. Evans
Location (lab/room #): BNR 234
Frequency and type of use daily - research
(i.e. daily, weekly, monthly, yearly - teaching, research)

General Information

Manufacturer: Amana
Model Number:
Size (width" x depth" x height"): 32 x 32 x 69
Weight (lbs):
Mount Location: ☑ Floor ☐ Wall ☐ Bench ☐ Ceiling
Mount Type: ☐ Fixed ☑ Movable

Mechanical Requirements

		Notes
☐	Exhaust Duct	
☐	Supply Air	
☐	Chilled Water	
☐	Steam	
☐	Other	
☐	Heat Rejection	BTUs:
☐	Alarm Points	

Plumbing Requirements

	Size	Flow	Connection Type
☐ Cold Water			
☐ Hot Water			
☐ Pure Water			
☐ Drain			
☐ Vacuum			
☐ Air			
☐ Natural Gas			
☐ Cylinder 1	Gas:		
☐ Cylinder 2	Gas:		
☐ Other			

Electrical Requirements

LOAD
Volts 120
Phase (1 or 3)
Wire (3, 4 or 5)
KVA
Amps
Watts

SOURCE
☑ Normal Only
☐ Emergency/Standby
☐ Power Quality
☐ Isolated Ground
☐ Dedicated
☐ Conditioned
☐ UPS

CONNECTION
☑ Single Point
☐ Multiple Point
☐ Explosion Proof
☐ Hard Wire
☐ Plug Configuration
☐ Other

Special Requirements

Photo

PROPOSED LAB SUITE: 5.1.3

Equipment Data Sheet

Date: 28-Jan-16

Equipment Item: Incubators (stand-up temperature chambers) **Quantit** 2
User Name: Edward W. Evans
Location (lab/room #): BNR 234
Frequency and type of use daily - research
(i.e. daily, weekly, monthly, yearly - teaching, research)

General Information

Manufacturer: Percival
Model Number: I-35 L
Size (width" x depth" x height"): 35 x 32 x 78
Weight (lbs):
Mount Location: ☑ Floor ☐ Wall ☐ Bench ☐ Ceiling
Mount Type: ☐ Fixed ☑ Movable

Mechanical Requirements

		Notes
☐	Exhaust Duct	
☐	Supply Air	
☐	Chilled Water	
☐	Steam	
☐	Other	
☐	Heat Rejection	BTUs:
☐	Alarm Points	

Plumbing Requirements

	Size	Flow	Connection Type
☐ Cold Water			
☐ Hot Water			
☐ Pure Water			
☐ Drain			
☐ Vacuum			
☐ Air			
☐ Natural Gas			
☐ Cylinder 1	Gas:		
☐ Cylinder 2	Gas:		
☐ Other			

Electrical Requirements

LOAD
Volts 220
Phase (1 or 3)
Wire (3, 4 or 5)
KVA
Amps
Watts

SOURCE
☑ Normal Only
☐ Emergency/Standby
☐ Power Quality
☐ Isolated Ground
☐ Dedicated
☐ Conditioned
☐ UPS

CONNECTION
☑ Single Point
☐ Multiple Point
☐ Explosion Proof
☐ Hard Wire
☐ Plug Configuration
☐ Other

Special Requirements

Photo

PROPOSED LAB SUITE: 5.1.3

Equipment Data Sheet

Date: 28-Jan-16

Equipment Item: Mechanical Convection (Drying) Oven **Quantit** 1
User Name: Edward W. Evans
Location (lab/room #): BNR 234
Frequency and type of use yearly - research
(i.e. daily, weekly, monthly, yearly - teaching, research)

General Information

Manufacturer: Precision
Model Number: STM 135
Size (width" x depth" x height"): 30 x 24 x 33
Weight (lbs):
Mount Location: ☐ Floor ☐ Wall ☑ Bench ☐ Ceiling
Mount Type: ☐ Fixed ☑ Movable

Mechanical Requirements

		Notes
☐	Exhaust Duct	
☐	Supply Air	
☐	Chilled Water	
☐	Steam	
☐	Other	
☐	Heat Rejection	BTUs:
☐	Alarm Points	

Plumbing Requirements

	Size	Flow	Connection Type
☐ Cold Water			
☐ Hot Water			
☐ Pure Water			
☐ Drain			
☐ Vacuum			
☐ Air			
☐ Natural Gas			
☐ Cylinder 1	Gas:		
☐ Cylinder 2	Gas:		
☐ Other			

Electrical Requirements

LOAD
Volts 220
Phase (1 or 3)
Wire (3, 4 or 5)
KVA
Amps
Watts

SOURCE
☑ Normal Only
☐ Emergency/Standby
☐ Power Quality
☐ Isolated Ground
☐ Dedicated
☐ Conditioned
☐ UPS

CONNECTION
☑ Single Point
☐ Multiple Point
☐ Explosion Proof
☐ Hard Wire
☐ Plug Configuration
☐ Other

Special Requirements

Photo

PROPOSED LAB SUITE: 5.1.3

Equipment Data Sheet

Date: 28-Jan-16

Equipment Item: Freezer (stand-up, -20 unit) **Quantit** 1
User Name: Edward W. Evans
Location (lab/room #): BNR 234
Frequency and type of use daily - research
(i.e. daily, weekly, monthly, yearly - teaching, research)

General Information

Manufacturer: Kenmore (Sears)
Model Number: 26591
Size (width" x depth" x height"): 31 x 30 x 64
Weight (lbs)
Mount Location: ☑ Floor ☐ Wall ☐ Bench ☐ Ceiling
Mount Type: ☐ Fixed ☑ Movable

Mechanical Requirements

	Notes
☐ Exhaust Duct	
☐ Supply Air	
☐ Chilled Water	
☐ Steam	
☐ Other	
☐ Heat Rejection	BTUs:
☐ Alarm Points	

Plumbing Requirements

	Size	Flow	Connection Type
☐ Cold Water			
☐ Hot Water			
☐ Pure Water			
☐ Drain			
☐ Vacuum			
☐ Air			
☐ Natural Gas			
☐ Cylinder 1	Gas:		
☐ Cylinder 2	Gas:		
☐ Other			

Electrical Requirements

LOAD
Volts 120
Phase (1 or 3)
Wire (3, 4 or 5)
KVA
Amps
Watts

SOURCE
☑ Normal Only
☐ Emergency/Standby
☐ Power Quality
☐ Isolated Ground
☐ Dedicated
☐ Conditioned
☐ UPS

CONNECTION
☑ Single Point
☐ Multiple Point
☐ Explosion Proof
☐ Hard Wire
☐ Plug Configuration
☐ Other

Special Requirements

Photo

PROPOSED LAB SUITE: 5.1.2

Equipment Data Sheet

Date:

Equipment Item: Laminar Flow Hood **Quantit** 2
User Name: Susannah French
Location (lab/room #): BNR 344, 328
Frequency and type of use Daily, Weekly - research
(i.e. daily, weekly, monthly, yearly - teaching, research)

General Information

Manufacturer
Model Number
Size (width" x depth" x height")
Weight (lbs)
Mount Location: ☐ Floor ☐ Wall ☐ Bench ☐ Ceiling
Mount Type: ☐ Fixed ☐ Movable

Mechanical Requirements

	Notes
☐ Exhaust Duct	
☐ Supply Air	
☐ Chilled Water	
☐ Steam	
☐ Other	
☐ Heat Rejection	BTUs:
☐ Alarm Points	

Plumbing Requirements

	Size	Flow	Connection Type
☐ Cold Water			
☐ Hot Water			
☐ Pure Water			
☐ Drain			
☐ Vacuum			
☐ Air			
☐ Natural Gas			
☐ Cylinder 1	Gas:		
☐ Cylinder 2	Gas:		
☐ Other			

Electrical Requirements

LOAD
Volts
Phase (1 or 3)
Wire (3, 4 or 5)
KVA
Amps
Watts

SOURCE
☑ Normal Only
☐ Emergency/Standby
☐ Power Quality
☐ Isolated Ground
☐ Dedicated
☐ Conditioned
☐ UPS

CONNECTION
☐ Single Point
☑ Multiple Point
☐ Explosion Proof
☐ Hard Wire
☐ Plug Configuration
☐ Other

Special Requirements

Photo

CRSA PAYETTE

PROPOSED LAB SUITE: 5.1.2

Equipment Data Sheet

Date: 12082015

Equipment Item: Chemical Fume Hood **Quantit** 1
User Name: Susannah French
Location (lab/room #): BNR 344
Frequency and type of use Daily/Weekly
(i.e. daily, weekly, monthly, yearly - teaching, research)

General Information

Manufacturer
Model Number
Size (width" x depth" x height")
Weight (lbs)
Mount Location ☐ Floor ☐ Wall ☐ Bench ☐ Ceiling
Mount Type ☐ Fixed ☐ Movable

Mechanical Requirements

		Notes
☑	Exhaust Duct	
☑	Supply Air	
☐	Chilled Water	
☐	Steam	
☐	Other	
☐	Heat Rejection	BTUs:
☑	Alarm Points	

Plumbing Requirements

	Size	Flow	Connection Type
☑ Cold Water			
☑ Hot Water			
☐ Pure Water			
☑ Drain			
☑ Vacuum			
☑ Air			
☑ Natural Gas			
☐ Cylinder 1	Gas:		
☐ Cylinder 2	Gas:		
☐ Other			

Electrical Requirements

LOAD
Volts
Phase (1 or 3)
Wire (3, 4 or 5)
KVA
Amps
Watts

SOURCE
☐ Normal Only
☐ Emergency/Standby
☐ Power Quality
☐ Isolated Ground
☐ Dedicated
☐ Conditioned
☐ UPS

CONNECTION
☐ Single Point
☐ Multiple Point
☐ Explosion Proof
☑ Hard Wire
☐ Plug Configuration
☐ Other

Special Requirements

Photo

PROPOSED LAB SUITE: 5.1.2

Equipment Data Sheet

Date:

Equipment Item: Refrigerator **Quantit** 2
User Name: Susannah French
Location (lab/room #): BNR 344, 346
Frequency and type of use Daily, research
(i.e. daily, weekly, monthly, yearly - teaching, research)

General Information

Manufacturer
Model Number
Size (width" x depth" x height")
Weight (lbs)
Mount Location ☐ Floor ☐ Wall ☐ Bench ☐ Ceiling
Mount Type ☐ Fixed ☐ Movable

Mechanical Requirements

		Notes
☐	Exhaust Duct	
☐	Supply Air	
☐	Chilled Water	
☐	Steam	
☐	Other	
☐	Heat Rejection	BTUs:
☐	Alarm Points	

Plumbing Requirements

	Size	Flow	Connection Type
☐ Cold Water			
☐ Hot Water			
☐ Pure Water			
☐ Drain			
☐ Vacuum			
☐ Air			
☐ Natural Gas			
☐ Cylinder 1	Gas:		
☐ Cylinder 2	Gas:		
☐ Other			

Electrical Requirements

LOAD
Volts
Phase (1 or 3)
Wire (3, 4 or 5)
KVA
Amps
Watts

SOURCE
☐ Normal Only
☑ Emergency/Standby
☐ Power Quality
☐ Isolated Ground
☐ Dedicated
☐ Conditioned
☐ UPS

CONNECTION
☐ Single Point
☑ Multiple Point
☐ Explosion Proof
☐ Hard Wire
☐ Plug Configuration
☐ Other

Special Requirements

Photo

PROPOSED LAB SUITE: 5.1.2

Equipment Data Sheet

Date:

Equipment Item: Refrigerated Centrifuge **Quantit** 2
User Name:
Location (lab/room #): BNR 344, 338
Frequency and type of use weekly - research
(i.e. daily, weekly, monthly, yearly - teaching, research)

General Information

Manufacturer
Model Number
Size (width" x depth" x height")
Weight (lbs)
Mount Location ☐ Floor ☐ Wall ☐ Bench ☐ Ceiling
Mount Type ☐ Fixed ☐ Movable

Mechanical Requirements

	Notes
☐ Exhaust Duct	
☐ Supply Air	
☐ Chilled Water	
☐ Steam	
☐ Other	
☐ Heat Rejection	BTUs:
☐ Alarm Points	

Plumbing Requirements

	Size	Flow	Connection Type
☐ Cold Water			
☐ Hot Water			
☐ Pure Water			
☐ Drain			
☐ Vacuum			
☐ Air			
☐ Natural Gas			
☐ Cylinder 1	Gas:		
☐ Cylinder 2	Gas:		
☐ Other			

Electrical Requirements

LOAD
Volts
Phase (1 or 3)
Wire (3, 4 or 5)
KVA
Amps
Watts

SOURCE
☑ Normal Only
☐ Emergency/Standby
☐ Power Quality
☐ Isolated Ground
☐ Dedicated
☐ Conditioned
☐ UPS

CONNECTION
☐ Single Point
☑ Multiple Point
☐ Explosion Proof
☐ Hard Wire
☐ Plug Configuration
☐ Other

Special Requirements

Photo

PROPOSED LAB SUITE: 5.1.2

Equipment Data Sheet

Date:

Equipment Item: drying oven **Quantit** 3
User Name: Susannah French
Location (lab/room #): BNR 344, 338
Frequency and type of use Daily, weekly
(i.e. daily, weekly, monthly, yearly - teaching, research)

General Information

Manufacturer
Model Number
Size (width" x depth" x height")
Weight (lbs)
Mount Location ☐ Floor ☐ Wall ☐ Bench ☐ Ceiling
Mount Type ☐ Fixed ☐ Movable

Mechanical Requirements

	Notes
☐ Exhaust Duct	
☐ Supply Air	
☐ Chilled Water	
☐ Steam	
☐ Other	
☐ Heat Rejection	BTUs:
☐ Alarm Points	

Plumbing Requirements

	Size	Flow	Connection Type
☐ Cold Water			
☐ Hot Water			
☐ Pure Water			
☐ Drain			
☐ Vacuum			
☐ Air			
☐ Natural Gas			
☐ Cylinder 1	Gas:		
☐ Cylinder 2	Gas:		
☐ Other			

Electrical Requirements

LOAD
Volts
Phase (1 or 3)
Wire (3, 4 or 5)
KVA
Amps
Watts

SOURCE
☑ Normal Only
☐ Emergency/Standby
☐ Power Quality
☐ Isolated Ground
☐ Dedicated
☐ Conditioned
☐ UPS

CONNECTION
☐ Single Point
☑ Multiple Point
☐ Explosion Proof
☐ Hard Wire
☐ Plug Configuration
☐ Other

Special Requirements

Photo

PROPOSED LAB SUITE: 5.1.2

Equipment Data Sheet

Date:

Equipment Item: CO2 water jacketed incubator **Quantit** 2
User Name: susannah french
Location (lab/room #): BNR 344, 338
Frequency and type of use weekly
(i.e. daily, weekly, monthly, yearly - teaching, research)

General Information

Manufacturer
Model Number
Size (width" x depth" x height")
Weight (lbs)
Mount Location ☐ Floor ☐ Wall ☐ Bench ☐ Ceiling
Mount Type ☐ Fixed ☐ Movable

Mechanical Requirements

	Notes
☐ Exhaust Duct	
☐ Supply Air	
☐ Chilled Water	
☐ Steam	
☐ Other	
☐ Heat Rejection	BTUs:
☐ Alarm Points	

Plumbing Requirements

	Size	Flow	Connection Type
☐ Cold Water			
☐ Hot Water			
☐ Pure Water			
☐ Drain			
☐ Vacuum			
☐ Air			
☐ Natural Gas			
☐ Cylinder 1	Gas:		
☐ Cylinder 2	Gas:		
☐ Other			

Electrical Requirements

LOAD
Volts
Phase (1 or 3)
Wire (3, 4 or 5)
KVA
Amps
Watts

SOURCE
☑ Normal Only
☐ Emergency/Standby
☐ Power Quality
☐ Isolated Ground
☐ Dedicated
☐ Conditioned
☐ UPS

CONNECTION
☐ Single Point
☑ Multiple Point
☐ Explosion Proof
☐ Hard Wire
☐ Plug Configuration
☐ Other

Special Requirements

Photo

PROPOSED LAB SUITE: 5.1.2

Equipment Data Sheet

Date:

Equipment Item: x mark spectrophotometer plate reader **Quantit** 1
User Name: susannah french
Location (lab/room #): BNR 344
Frequency and type of use daily/weekly - research
(i.e. daily, weekly, monthly, yearly - teaching, research)

General Information

Manufacturer
Model Number
Size (width" x depth" x height")
Weight (lbs)
Mount Location ☐ Floor ☐ Wall ☐ Bench ☐ Ceiling
Mount Type ☐ Fixed ☐ Movable

Mechanical Requirements

	Notes
☐ Exhaust Duct	
☐ Supply Air	
☐ Chilled Water	
☐ Steam	
☐ Other	
☐ Heat Rejection	BTUs:
☐ Alarm Points	

Plumbing Requirements

	Size	Flow	Connection Type
☐ Cold Water			
☐ Hot Water			
☐ Pure Water			
☐ Drain			
☐ Vacuum			
☐ Air			
☐ Natural Gas			
☐ Cylinder 1	Gas:		
☐ Cylinder 2	Gas:		
☐ Other			

Electrical Requirements

LOAD
Volts
Phase (1 or 3)
Wire (3, 4 or 5)
KVA
Amps
Watts

SOURCE
☑ Normal Only
☐ Emergency/Standby
☐ Power Quality
☐ Isolated Ground
☐ Dedicated
☐ Conditioned
☐ UPS

CONNECTION
☐ Single Point
☑ Multiple Point
☐ Explosion Proof
☐ Hard Wire
☐ Plug Configuration
☐ Other

Special Requirements

Photo

PROPOSED LAB SUITE: 5.1.2

Equipment Data Sheet

Date:

Equipment Item: biorad plate washer **Quantit** 1
User Name: susannah french
Location (lab/room #): BNR 344
Frequency and type of use weekly - research
(i.e. daily, weekly, monthly, yearly - teaching, research)

General Information

Manufacturer
Model Number
Size (width" x depth" x height")
Weight (lbs)
Mount Location ☐ Floor ☐ Wall ☐ Bench ☐ Ceiling
Mount Type ☐ Fixed ☐ Movable

Mechanical Requirements

	Notes
☐ Exhaust Duct	
☐ Supply Air	
☐ Chilled Water	
☐ Steam	
☐ Other	
☐ Heat Rejection	BTUs:
☐ Alarm Points	

Plumbing Requirements

	Size	Flow	Connection Type
☐ Cold Water			
☐ Hot Water			
☐ Pure Water			
☐ Drain			
☐ Vacuum			
☐ Air			
☐ Natural Gas			
☐ Cylinder 1	Gas:		
☐ Cylinder 2	Gas:		
☐ Other			

Electrical Requirements

LOAD	SOURCE	CONNECTION
Volts	☑ Normal Only	☑ Single Point
Phase (1 or 3)	☐ Emergency/Standby	☐ Multiple Point
Wire (3, 4 or 5)	☐ Power Quality	☐ Explosion Proof
KVA	☐ Isolated Ground	☐ Hard Wire
Amps	☐ Dedicated	☐ Plug Configuration
Watts	☐ Conditioned	
	☐ UPS	☐ Other

Special Requirements

Photo

PROPOSED LAB SUITE: 5.1.2

Equipment Data Sheet

Date:

Equipment Item: light microscope **Quantit** 3
User Name: susannah french
Location (lab/room #): BNR 346
Frequency and type of use daily/weekly - research
(i.e. daily, weekly, monthly, yearly - teaching, research)

General Information

Manufacturer
Model Number
Size (width" x depth" x height")
Weight (lbs)
Mount Location ☐ Floor ☐ Wall ☐ Bench ☐ Ceiling
Mount Type ☐ Fixed ☐ Movable

Mechanical Requirements

	Notes
☐ Exhaust Duct	
☐ Supply Air	
☐ Chilled Water	
☐ Steam	
☐ Other	
☐ Heat Rejection	BTUs:
☐ Alarm Points	

Plumbing Requirements

	Size	Flow	Connection Type
☐ Cold Water			
☐ Hot Water			
☐ Pure Water			
☐ Drain			
☐ Vacuum			
☐ Air			
☐ Natural Gas			
☐ Cylinder 1	Gas:		
☐ Cylinder 2	Gas:		
☐ Other			

Electrical Requirements

LOAD	SOURCE	CONNECTION
Volts	☑ Normal Only	☑ Single Point
Phase (1 or 3)	☐ Emergency/Standby	☐ Multiple Point
Wire (3, 4 or 5)	☐ Power Quality	☐ Explosion Proof
KVA	☐ Isolated Ground	☐ Hard Wire
Amps	☐ Dedicated	☐ Plug Configuration
Watts	☐ Conditioned	
	☐ UPS	☐ Other

Special Requirements

Photo

PROPOSED LAB SUITE: 5.1.2

Equipment Data Sheet

Date:

Equipment Item: freedom breeder animal cage racks **Quantit** 6
User Name: susannah french
Location (lab/room #): BNR 342
Frequency and type of use daily - researcd
(i.e. daily, weekly, monthly, yearly - teaching, research)

General Information

Manufacturer
Model Number
Size (width" x depth" x height")
Weight (lbs)
Mount Location ☐ Floor ☐ Wall ☐ Bench ☐ Ceiling
Mount Type ☐ Fixed ☐ Movable

Mechanical Requirements

	Notes
☐ Exhaust Duct	
☐ Supply Air	
☐ Chilled Water	
☐ Steam	
☐ Other	
☐ Heat Rejection	BTUs:
☐ Alarm Points	

Plumbing Requirements

	Size	Flow	Connection Type
☐ Cold Water			
☐ Hot Water			
☐ Pure Water			
☐ Drain			
☐ Vacuum			
☐ Air			
☐ Natural Gas			
☐ Cylinder 1	Gas:		
☐ Cylinder 2	Gas:		
☐ Other			

Electrical Requirements

LOAD
Volts
Phase (1 or 3)
Wire (3, 4 or 5)
KVA
Amps
Watts

SOURCE
☐ Normal Only
☑ Emergency/Standby
☐ Power Quality
☐ Isolated Ground
☐ Dedicated
☐ Conditioned
☐ UPS

CONNECTION
☐ Single Point
☑ Multiple Point
☐ Explosion Proof
☐ Hard Wire
☐ Plug Configuration
☐ Other

Special Requirements

Photo

PROPOSED LAB SUITE: 5.1.2

Equipment Data Sheet

Date:

Equipment Item: desktop computer **Quantit** 4
User Name: susannah french
Location (lab/room #): BNR 344
Frequency and type of use daily - research
(i.e. daily, weekly, monthly, yearly - teaching, research)

General Information

Manufacturer
Model Number
Size (width" x depth" x height")
Weight (lbs)
Mount Location ☐ Floor ☐ Wall ☐ Bench ☐ Ceiling
Mount Type ☐ Fixed ☐ Movable

Mechanical Requirements

	Notes
☐ Exhaust Duct	
☐ Supply Air	
☐ Chilled Water	
☐ Steam	
☐ Other	
☐ Heat Rejection	BTUs:
☐ Alarm Points	

Plumbing Requirements

	Size	Flow	Connection Type
☐ Cold Water			
☐ Hot Water			
☐ Pure Water			
☐ Drain			
☐ Vacuum			
☐ Air			
☐ Natural Gas			
☐ Cylinder 1	Gas:		
☐ Cylinder 2	Gas:		
☐ Other			

Electrical Requirements

LOAD
Volts
Phase (1 or 3)
Wire (3, 4 or 5)
KVA
Amps
Watts

SOURCE
☑ Normal Only
☐ Emergency/Standby
☐ Power Quality
☐ Isolated Ground
☐ Dedicated
☐ Conditioned
☐ UPS

CONNECTION
☑ Single Point
☐ Multiple Point
☐ Explosion Proof
☐ Hard Wire
☐ Plug Configuration
☐ Other

Special Requirements

Photo

PROPOSED LAB SUITE: 5.1.2

Equipment Data Sheet

Date:

Equipment Item: retsch mill ball grinder **Quantit** 1
User Name: susannah french
Location (lab/room #): BNR 344
Frequency and type of use daily/weekly - research
(i.e. daily, weekly, monthly, yearly - teaching, research)

General Information

Manufacturer
Model Number
Size (width" x depth" x height")
Weight (lbs)
Mount Location ☐ Floor ☐ Wall ☐ Bench ☐ Ceiling
Mount Type ☐ Fixed ☐ Movable

Mechanical Requirements

	Notes
☐ Exhaust Duct	
☐ Supply Air	
☐ Chilled Water	
☐ Steam	
☐ Other	
☐ Heat Rejection	BTUs:
☐ Alarm Points	

Plumbing Requirements

	Size	Flow	Connection Type
☐ Cold Water			
☐ Hot Water			
☐ Pure Water			
☐ Drain			
☐ Vacuum			
☐ Air			
☐ Natural Gas			
☐ Cylinder 1	Gas:		
☐ Cylinder 2	Gas:		
☐ Other			

Electrical Requirements

LOAD
Volts
Phase (1 or 3)
Wire (3, 4 or 5)
KVA
Amps
Watts

SOURCE
☑ Normal Only
☐ Emergency/Standby
☐ Power Quality
☐ Isolated Ground
☐ Dedicated
☐ Conditioned
☐ UPS

CONNECTION
☐ Single Point
☑ Multiple Point
☐ Explosion Proof
☐ Hard Wire
☐ Plug Configuration
☐ Other

Special Requirements

Photo

PROPOSED LAB SUITE: 5.1.2

Equipment Data Sheet

Date:

Equipment Item: mixer/heat plate **Quantit** 3
User Name: susannah french
Location (lab/room #): BNR 344
Frequency and type of use daily/weekly - research
(i.e. daily, weekly, monthly, yearly - teaching, research)

General Information

Manufacturer
Model Number
Size (width" x depth" x height")
Weight (lbs)
Mount Location ☐ Floor ☐ Wall ☐ Bench ☐ Ceiling
Mount Type ☐ Fixed ☐ Movable

Mechanical Requirements

	Notes
☐ Exhaust Duct	
☐ Supply Air	
☐ Chilled Water	
☐ Steam	
☐ Other	
☐ Heat Rejection	BTUs:
☐ Alarm Points	

Plumbing Requirements

	Size	Flow	Connection Type
☐ Cold Water			
☐ Hot Water			
☐ Pure Water			
☐ Drain			
☐ Vacuum			
☐ Air			
☐ Natural Gas			
☐ Cylinder 1	Gas:		
☐ Cylinder 2	Gas:		
☐ Other			

Electrical Requirements

LOAD
Volts
Phase (1 or 3)
Wire (3, 4 or 5)
KVA
Amps
Watts

SOURCE
☑ Normal Only
☐ Emergency/Standby
☐ Power Quality
☐ Isolated Ground
☐ Dedicated
☐ Conditioned
☐ UPS

CONNECTION
☐ Single Point
☐ Multiple Point
☐ Explosion Proof
☐ Hard Wire
☐ Plug Configuration
☐ Other

Special Requirements

Photo

PROPOSED LAB SUITE: 5.1.2

Equipment Data Sheet

Date:

Equipment Item: analytical balance **Quantit** 3
User Name: susannah french
Location (lab/room #): BNR 344
Frequency and type of use daily/weekly - research
(i.e. daily, weekly, monthly, yearly - teaching, research)

General Information

Manufacturer
Model Number
Size (width" x depth" x height")
Weight (lbs)
Mount Location ☐ Floor ☐ Wall ☐ Bench ☐ Ceiling
Mount Type ☐ Fixed ☐ Movable

Mechanical Requirements

	Notes
☐ Exhaust Duct	
☐ Supply Air	
☐ Chilled Water	
☐ Steam	
☐ Other	
☐ Heat Rejection	BTUs:
☐ Alarm Points	

Plumbing Requirements

	Size	Flow	Connection Type
☐ Cold Water			
☐ Hot Water			
☐ Pure Water			
☐ Drain			
☐ Vacuum			
☐ Air			
☐ Natural Gas			
☐ Cylinder 1	Gas:		
☐ Cylinder 2	Gas:		
☐ Other			

Electrical Requirements

LOAD
Volts
Phase (1 or 3)
Wire (3, 4 or 5)
KVA
Amps
Watts

SOURCE
☑ Normal Only
☐ Emergency/Standby
☐ Power Quality
☐ Isolated Ground
☐ Dedicated
☐ Conditioned
☐ UPS

CONNECTION
☐ Single Point
☐ Multiple Point
☐ Explosion Proof
☐ Hard Wire
☐ Plug Configuration
☐ Other

Special Requirements

Photo

PROPOSED LAB SUITE: 5.1.2

Equipment Data Sheet

Date:

Equipment Item: microplate vortexer **Quantit** 2
User Name: susannah french
Location (lab/room #): BNR 344
Frequency and type of use daily/weekly - research
(i.e. daily, weekly, monthly, yearly - teaching, research)

General Information

Manufacturer
Model Number
Size (width" x depth" x height")
Weight (lbs)
Mount Location ☐ Floor ☐ Wall ☐ Bench ☐ Ceiling
Mount Type ☐ Fixed ☐ Movable

Mechanical Requirements

	Notes
☐ Exhaust Duct	
☐ Supply Air	
☐ Chilled Water	
☐ Steam	
☐ Other	
☐ Heat Rejection	BTUs:
☐ Alarm Points	

Plumbing Requirements

	Size	Flow	Connection Type
☐ Cold Water			
☐ Hot Water			
☐ Pure Water			
☐ Drain			
☐ Vacuum			
☐ Air			
☐ Natural Gas			
☐ Cylinder 1	Gas:		
☐ Cylinder 2	Gas:		
☐ Other			

Electrical Requirements

LOAD
Volts
Phase (1 or 3)
Wire (3, 4 or 5)
KVA
Amps
Watts

SOURCE
☑ Normal Only
☐ Emergency/Standby
☐ Power Quality
☐ Isolated Ground
☐ Dedicated
☐ Conditioned
☐ UPS

CONNECTION
☐ Single Point
☐ Multiple Point
☐ Explosion Proof
☐ Hard Wire
☐ Plug Configuration
☐ Other

Special Requirements

Photo

PROPOSED LAB SUITE: 5.1.2

Equipment Data Sheet

Date:

Equipment Item: tube vortexer **Quantit** 4
User Name: susannah french
Location (lab/room #): BNR 344, 338
Frequency and type of use daily/weekly - research
(i.e. daily, weekly, monthly, yearly - teaching, research)

General Information

Manufacturer
Model Number
Size (width" x depth" x height")
Weight (lbs)
Mount Location ☐ Floor ☐ Wall ☐ Bench ☐ Ceiling
Mount Type ☐ Fixed ☐ Movable

Mechanical Requirements

	Notes
☐ Exhaust Duct	
☐ Supply Air	
☐ Chilled Water	
☐ Steam	
☐ Other	
☐ Heat Rejection	BTUs:
☐ Alarm Points	

Plumbing Requirements

	Size	Flow	Connection Type
☐ Cold Water			
☐ Hot Water			
☐ Pure Water			
☐ Drain			
☐ Vacuum			
☐ Air			
☐ Natural Gas			
☐ Cylinder 1	Gas:		
☐ Cylinder 2	Gas:		
☐ Other			

Electrical Requirements

LOAD	SOURCE	CONNECTION
Volts	☑ Normal Only	☐ Single Point
Phase (1 or 3)	☐ Emergency/Standby	☐ Multiple Point
Wire (3, 4 or 5)	☐ Power Quality	☐ Explosion Proof
KVA	☐ Isolated Ground	☐ Hard Wire
Amps	☐ Dedicated	☐ Plug Configuration
Watts	☐ Conditioned	
	☐ UPS	☐ Other

Special Requirements

Photo

PROPOSED LAB SUITE: 5.1.2

Equipment Data Sheet

Date:

Equipment Item: large mixing tray **Quantit** 2
User Name: susannah french
Location (lab/room #): BNR 338
Frequency and type of use daily/weekly - research
(i.e. daily, weekly, monthly, yearly - teaching, research)

General Information

Manufacturer
Model Number
Size (width" x depth" x height")
Weight (lbs)
Mount Location ☐ Floor ☐ Wall ☐ Bench ☐ Ceiling
Mount Type ☐ Fixed ☐ Movable

Mechanical Requirements

	Notes
☐ Exhaust Duct	
☐ Supply Air	
☐ Chilled Water	
☐ Steam	
☐ Other	
☐ Heat Rejection	BTUs:
☐ Alarm Points	

Plumbing Requirements

	Size	Flow	Connection Type
☐ Cold Water			
☐ Hot Water			
☐ Pure Water			
☐ Drain			
☐ Vacuum			
☐ Air			
☐ Natural Gas			
☐ Cylinder 1	Gas:		
☐ Cylinder 2	Gas:		
☐ Other			

Electrical Requirements

LOAD	SOURCE	CONNECTION
Volts	☑ Normal Only	☐ Single Point
Phase (1 or 3)	☐ Emergency/Standby	☐ Multiple Point
Wire (3, 4 or 5)	☐ Power Quality	☐ Explosion Proof
KVA	☐ Isolated Ground	☐ Hard Wire
Amps	☐ Dedicated	☐ Plug Configuration
Watts	☐ Conditioned	
	☐ UPS	☐ Other

Special Requirements

Photo

PROPOSED LAB SUITE: 5.1.2

Equipment Data Sheet

Date:

Equipment Item: ultracold -80 upright freezer **Quantit** 2
User Name: susannah french
Location (lab/room #): BNR 338, 328
Frequency and type of use daily/weekly - research
(i.e. daily, weekly, monthly, yearly - teaching, research)

General Information

Manufacturer Revco
Model Number
Size (width" x depth" x height")
Weight (lbs)
Mount Location ☐ Floor ☐ Wall ☐ Bench ☐ Ceiling
Mount Type ☐ Fixed ☐ Movable

Mechanical Requirements

	Notes
☐ Exhaust Duct	
☐ Supply Air	
☐ Chilled Water	
☐ Steam	
☐ Other	
☐ Heat Rejection	BTUs:
☐ Alarm Points	

Plumbing Requirements

	Size	Flow	Connection Type
☐ Cold Water			
☐ Hot Water			
☐ Pure Water			
☐ Drain			
☐ Vacuum			
☐ Air			
☐ Natural Gas			
☐ Cylinder 1	Gas:		
☐ Cylinder 2	Gas:		
☐ Other			

Electrical Requirements

LOAD	SOURCE	CONNECTION
Volts	☐ Normal Only	☐ Single Point
Phase (1 or 3)	☑ Emergency/Standby	☑ Multiple Point
Wire (3, 4 or 5)	☐ Power Quality	☐ Explosion Proof
KVA	☐ Isolated Ground	☐ Hard Wire
Amps	☐ Dedicated	☐ Plug Configuration
Watts	☐ Conditioned	
	☐ UPS	☐ Other

Special Requirements

Photo

PROPOSED LAB SUITE: 5.1.2

Equipment Data Sheet

Date:

Equipment Item: tabletop centrifuge **Quantit** 2
User Name: susannah french
Location (lab/room #): BNR 344
Frequency and type of use daily/weekly - research
(i.e. daily, weekly, monthly, yearly - teaching, research)

General Information

Manufacturer
Model Number
Size (width" x depth" x height")
Weight (lbs)
Mount Location ☐ Floor ☐ Wall ☐ Bench ☐ Ceiling
Mount Type ☐ Fixed ☐ Movable

Mechanical Requirements

	Notes
☐ Exhaust Duct	
☐ Supply Air	
☐ Chilled Water	
☐ Steam	
☐ Other	
☐ Heat Rejection	BTUs:
☐ Alarm Points	

Plumbing Requirements

	Size	Flow	Connection Type
☐ Cold Water			
☐ Hot Water			
☐ Pure Water			
☐ Drain			
☐ Vacuum			
☐ Air			
☐ Natural Gas			
☐ Cylinder 1	Gas:		
☐ Cylinder 2	Gas:		
☐ Other			

Electrical Requirements

LOAD	SOURCE	CONNECTION
Volts	☑ Normal Only	☐ Single Point
Phase (1 or 3)	☐ Emergency/Standby	☐ Multiple Point
Wire (3, 4 or 5)	☐ Power Quality	☐ Explosion Proof
KVA	☐ Isolated Ground	☐ Hard Wire
Amps	☐ Dedicated	☐ Plug Configuration
Watts	☐ Conditioned	
	☐ UPS	☐ Other

Special Requirements

Photo

PROPOSED LAB SUITE: 5.1.2

Equipment Data Sheet

Date:

Equipment Item: waterbath **Quantit** 2
User Name: susannah french
Location (lab/room #): BNR 340, 338
Frequency and type of use daily/weekly - research
(i.e. daily, weekly, monthly, yearly - teaching, research)

General Information

Manufacturer
Model Number
Size (width" x depth" x height")
Weight (lbs)
Mount Location ☐ Floor ☐ Wall ☐ Bench ☐ Ceiling
Mount Type ☐ Fixed ☐ Movable

Mechanical Requirements

	Notes
☐ Exhaust Duct	
☐ Supply Air	
☐ Chilled Water	
☐ Steam	
☐ Other	
☐ Heat Rejection	BTUs:
☐ Alarm Points	

Plumbing Requirements

	Size	Flow	Connection Type
☐ Cold Water			
☐ Hot Water			
☐ Pure Water			
☐ Drain			
☐ Vacuum			
☐ Air			
☐ Natural Gas			
☐ Cylinder 1	Gas:		
☐ Cylinder 2	Gas:		
☐ Other			

Electrical Requirements

LOAD
Volts
Phase (1 or 3)
Wire (3, 4 or 5)
KVA
Amps
Watts

SOURCE
☑ Normal Only
☐ Emergency/Standby
☐ Power Quality
☐ Isolated Ground
☐ Dedicated
☐ Conditioned
☐ UPS

CONNECTION
☐ Single Point
☐ Multiple Point
☐ Explosion Proof
☐ Hard Wire
☐ Plug Configuration
☐ Other

Special Requirements

Photo

PROPOSED LAB SUITE: 5.1.2

Equipment Data Sheet

Date:

Equipment Item: refrigerated mixer **Quantit** 1
User Name: susannah french
Location (lab/room #): BNR 338
Frequency and type of use daily/weekly - research
(i.e. daily, weekly, monthly, yearly - teaching, research)

General Information

Manufacturer
Model Number
Size (width" x depth" x height")
Weight (lbs)
Mount Location ☐ Floor ☐ Wall ☐ Bench ☐ Ceiling
Mount Type ☐ Fixed ☐ Movable

Mechanical Requirements

	Notes
☐ Exhaust Duct	
☐ Supply Air	
☐ Chilled Water	
☐ Steam	
☐ Other	
☐ Heat Rejection	BTUs:
☐ Alarm Points	

Plumbing Requirements

	Size	Flow	Connection Type
☐ Cold Water			
☐ Hot Water			
☐ Pure Water			
☐ Drain			
☐ Vacuum			
☐ Air			
☐ Natural Gas			
☐ Cylinder 1	Gas:		
☐ Cylinder 2	Gas:		
☐ Other			

Electrical Requirements

LOAD
Volts
Phase (1 or 3)
Wire (3, 4 or 5)
KVA
Amps
Watts

SOURCE
☑ Normal Only
☐ Emergency/Standby
☐ Power Quality
☐ Isolated Ground
☐ Dedicated
☐ Conditioned
☐ UPS

CONNECTION
☐ Single Point
☐ Multiple Point
☐ Explosion Proof
☐ Hard Wire
☐ Plug Configuration
☐ Other

Special Requirements

Photo

PROPOSED LAB SUITE: 5.1.2

Equipment Data Sheet

Date:

Equipment Item: column chromatography rack **Quantit** 1
User Name: susannah french
Location (lab/room #): BNR 340
Frequency and type of use daily/weekly - research
(i.e. daily, weekly, monthly, yearly - teaching, research)

General Information

Manufacturer
Model Number
Size (width" x depth" x height")
Weight (lbs)
Mount Location ☐ Floor ☐ Wall ☐ Bench ☐ Ceiling
Mount Type ☐ Fixed ☐ Movable

Mechanical Requirements

	Notes
☑ Exhaust Duct	
☐ Supply Air	
☐ Chilled Water	
☐ Steam	
☐ Other	
☐ Heat Rejection	BTUs:
☐ Alarm Points	

Plumbing Requirements

	Size	Flow	Connection Type
☐ Cold Water			
☐ Hot Water			
☐ Pure Water			
☐ Drain			
☐ Vacuum			
☐ Air			
☐ Natural Gas			
☑ Cylinder 1	Gas: Nitrogen		
☑ Cylinder 2	Gas: Nitrogen		
☐ Other			

Electrical Requirements

LOAD
Volts
Phase (1 or 3)
Wire (3, 4 or 5)
KVA
Amps
Watts

SOURCE
☐ Normal Only
☐ Emergency/Standby
☐ Power Quality
☐ Isolated Ground
☐ Dedicated
☐ Conditioned
☐ UPS

CONNECTION
☐ Single Point
☐ Multiple Point
☐ Explosion Proof
☐ Hard Wire
☐ Plug Configuration
☐ Other

Special Requirements

Photo

PROPOSED LAB SUITE: 5.1.2

Equipment Data Sheet

Date:

Equipment Item: muffle furnace **Quantit** 1
User Name: susannah french
Location (lab/room #): BNR 344
Frequency and type of use daily/weekly - research
(i.e. daily, weekly, monthly, yearly - teaching, research)

General Information

Manufacturer
Model Number
Size (width" x depth" x height")
Weight (lbs)
Mount Location ☐ Floor ☐ Wall ☐ Bench ☐ Ceiling
Mount Type ☐ Fixed ☐ Movable

Mechanical Requirements

	Notes
☐ Exhaust Duct	
☐ Supply Air	
☐ Chilled Water	
☐ Steam	
☐ Other	
☐ Heat Rejection	BTUs:
☐ Alarm Points	

Plumbing Requirements

	Size	Flow	Connection Type
☐ Cold Water			
☐ Hot Water			
☐ Pure Water			
☐ Drain			
☐ Vacuum			
☐ Air			
☐ Natural Gas			
☐ Cylinder 1	Gas:		
☐ Cylinder 2	Gas:		
☐ Other			

Electrical Requirements

LOAD
Volts
Phase (1 or 3)
Wire (3, 4 or 5)
KVA
Amps
Watts

SOURCE
☑ Normal Only
☐ Emergency/Standby
☐ Power Quality
☐ Isolated Ground
☐ Dedicated
☐ Conditioned
☐ UPS

CONNECTION
☐ Single Point
☑ Multiple Point
☐ Explosion Proof
☐ Hard Wire
☐ Plug Configuration
☐ Other

Special Requirements

Photo

PROPOSED LAB SUITE: 5.1.2

Equipment Data Sheet

Date:

Equipment Item: Grumbach egg incubator **Quantit** 1
User Name: susannah french
Location (lab/room #): BNR 344
Frequency and type of use daily/weekly - research
(i.e. daily, weekly, monthly, yearly - teaching, research)

General Information

Manufacturer: Grumbach
Model Number:
Size (width" x depth" x height"):
Weight (lbs):
Mount Location: ☐ Floor ☐ Wall ☐ Bench ☐ Ceiling
Mount Type: ☐ Fixed ☐ Movable

Mechanical Requirements

	Notes
☐ Exhaust Duct	
☐ Supply Air	
☐ Chilled Water	
☐ Steam	
☐ Other	
☐ Heat Rejection	BTUs:
☐ Alarm Points	

Plumbing Requirements

	Size	Flow	Connection Type
☐ Cold Water			
☐ Hot Water			
☐ Pure Water			
☐ Drain			
☐ Vacuum			
☐ Air			
☐ Natural Gas			
☐ Cylinder 1	Gas:		
☐ Cylinder 2	Gas:		
☐ Other			

Electrical Requirements

LOAD
Volts
Phase (1 or 3)
Wire (3, 4 or 5)
KVA
Amps
Watts

SOURCE
☐ Normal Only
☑ Emergency/Standby
☐ Power Quality
☐ Isolated Ground
☐ Dedicated
☐ Conditioned
☐ UPS

CONNECTION
☐ Single Point
☑ Multiple Point
☐ Explosion Proof
☐ Hard Wire
☐ Plug Configuration
☐ Other

Special Requirements

Photo

PROPOSED LAB SUITE: 5.1.1

Equipment Data Sheet

Date ########

Equipment Item: Forma Scientific Low T Incubator **Quantit** 2
User Name: FRANK J MESSINA
Location (lab/room #): BNR 201
Frequency and type of use DAILY - RESEARCH
(i.e. daily, weekly, monthly, yearly - teaching, research)

General Information

Manufacturer: FORMA SCIENTIFIC
Model Number: 3740
Size (width" x depth" x height"): 48 X 48 X 72
Weight (lbs): 200
Mount Location: ☑ Floor ☐ Wall ☐ Bench ☐ Ceiling
Mount Type: ☐ Fixed ☑ Movable

Mechanical Requirements

	Notes
☐ Exhaust Duct	
☐ Supply Air	
☐ Chilled Water	
☐ Steam	
☐ Other	
☐ Heat Rejection	BTUs:
☐ Alarm Points	

Plumbing Requirements

	Size	Flow	Connection Type
☐ Cold Water			
☐ Hot Water			
☐ Pure Water			
☐ Drain			
☐ Vacuum			
☐ Air			
☐ Natural Gas			
☐ Cylinder 1	Gas:		
☐ Cylinder 2	Gas:		
☐ Other			

Electrical Requirements

LOAD
Volts
Phase (1 or 3)
Wire (3, 4 or 5)
KVA
Amps
Watts

SOURCE
☑ Normal Only
☐ Emergency/Standby
☐ Power Quality
☐ Isolated Ground
☐ Dedicated
☐ Conditioned
☐ UPS

CONNECTION
☑ Single Point
☐ Multiple Point
☐ Explosion Proof
☐ Hard Wire
☐ Plug Configuration
☐ Other

Special Requirements

Photo

PROPOSED LAB SUITE: 5.1.1

Equipment Data Sheet

Date ########

Equipment Item: VWR LOW-T INCUBATOR **Quantit** 1
User Name: FRANK J MESSINA
Location (lab/room #): BNR 201
Frequency and type of use DAILY - RESEARCHY
(i.e. daily, weekly, monthly, yearly - teaching, research)

General Information

Manufacturer VWR
Model Number 2015
Size (width" x depth" x height") 78 X 60 X 48
Weight (lbs) 200
Mount Location ☑ Floor ☐ Wall ☐ Bench ☐ Ceiling
Mount Type ☐ Fixed ☑ Movable

Mechanical Requirements

	Notes
☐ Exhaust Duct	
☐ Supply Air	
☐ Chilled Water	
☐ Steam	
☐ Other	
☐ Heat Rejection	BTUs:
☐ Alarm Points	

Plumbing Requirements

	Size	Flow	Connection Type
☐ Cold Water			
☐ Hot Water			
☐ Pure Water			
☐ Drain			
☐ Vacuum			
☐ Air			
☐ Natural Gas			
☐ Cylinder 1	Gas:		
☐ Cylinder 2	Gas:		
☐ Other			

Electrical Requirements

LOAD
Volts
Phase (1 or 3)
Wire (3, 4 or 5)
KVA
Amps
Watts

SOURCE
☑ Normal Only
☐ Emergency/Standby
☐ Power Quality
☐ Isolated Ground
☐ Dedicated
☐ Conditioned
☐ UPS

CONNECTION
☑ Single Point
☐ Multiple Point
☐ Explosion Proof
☐ Hard Wire
☐ Plug Configuration
☐ Other

Special Requirements

Photo

PROPOSED LAB SUITE: 5.1.1

Equipment Data Sheet

Date: 26-Jan-16

Equipment Item: PRECISION LOW-T INCUBATOR **Quantit** 1
User Name: FRANK J MESSINA
Location (lab/room #): BNR 201
Frequency and type of use DAILY - RESEARCH
(i.e. daily, weekly, monthly, yearly - teaching, research)

General Information

Manufacturer PRECISION
Model Number 818
Size (width" x depth" x height") 78 X 60 X 48
Weight (lbs) 200
Mount Location ☑ Floor ☐ Wall ☐ Bench ☐ Ceiling
Mount Type ☐ Fixed ☑ Movable

Mechanical Requirements

	Notes
☐ Exhaust Duct	
☐ Supply Air	
☐ Chilled Water	
☐ Steam	
☐ Other	
☐ Heat Rejection	BTUs:
☐ Alarm Points	

Plumbing Requirements

	Size	Flow	Connection Type
☐ Cold Water			
☐ Hot Water			
☐ Pure Water			
☐ Drain			
☐ Vacuum			
☐ Air			
☐ Natural Gas			
☐ Cylinder 1	Gas:		
☐ Cylinder 2	Gas:		
☐ Other			

Electrical Requirements

LOAD
Volts
Phase (1 or 3)
Wire (3, 4 or 5)
KVA
Amps
Watts

SOURCE
☑ Normal Only
☐ Emergency/Standby
☐ Power Quality
☐ Isolated Ground
☐ Dedicated
☐ Conditioned
☐ UPS

CONNECTION
☑ Single Point
☐ Multiple Point
☐ Explosion Proof
☐ Hard Wire
☐ Plug Configuration
☐ Other

Special Requirements

Photo

PROPOSED LAB SUITE: 5.1.1

Equipment Data Sheet

Date: 26-Jan-16

Equipment Item: REFRIGERATOR **Quantity:**
User Name: FRANK J MESSINA
Location (lab/room #): BNR 201
Frequency and type of use DAILY
(i.e. daily, weekly, monthly, yearly - teaching, research)

General Information

Manufacturer: PRECISION
Model Number: 812
Size (width" x depth" x height"): 48 X 48 X 72
Weight (lbs): 200
Mount Location: ☑ Floor ☐ Wall ☐ Bench ☐ Ceiling
Mount Type: ☐ Fixed ☑ Movable

Mechanical Requirements

	Notes
☐ Exhaust Duct	
☐ Supply Air	
☐ Chilled Water	
☐ Steam	
☐ Other	
☐ Heat Rejection	BTUs:
☐ Alarm Points	

Plumbing Requirements

	Size	Flow	Connection Type
☐ Cold Water			
☐ Hot Water			
☐ Pure Water			
☐ Drain			
☐ Vacuum			
☐ Air			
☐ Natural Gas			
☐ Cylinder 1	Gas:		
☐ Cylinder 2	Gas:		
☐ Other			

Electrical Requirements

LOAD
Volts
Phase (1 or 3)
Wire (3, 4 or 5)
KVA
Amps
Watts

SOURCE
☑ Normal Only
☐ Emergency/Standby
☐ Power Quality
☐ Isolated Ground
☐ Dedicated
☐ Conditioned
☐ UPS

CONNECTION
☑ Single Point
☐ Multiple Point
☐ Explosion Proof
☐ Hard Wire
☐ Plug Configuration
☐ Other

Special Requirements

Photo

PROPOSED LAB SUITE: 5.1.1

Equipment Data Sheet

Date: 26-Jan-16

Equipment Item: TABLE-TOP INCUBATOR **Quantit** 1
User Name: FRANK J MESSINA
Location (lab/room #): BNR 201
Frequency and type of use DAILY - RESEARCH
(i.e. daily, weekly, monthly, yearly - teaching, research)

General Information

Manufacturer: VWR
Model Number: 1540
Size (width" x depth" x height"): 36 X 36 X 48
Weight (lbs): 100
Mount Location: ☐ Floor ☐ Wall ☑ Bench ☐ Ceiling
Mount Type: ☐ Fixed ☑ Movable

Mechanical Requirements

	Notes
☐ Exhaust Duct	
☐ Supply Air	
☐ Chilled Water	
☐ Steam	
☐ Other	
☐ Heat Rejection	BTUs:
☐ Alarm Points	

Plumbing Requirements

	Size	Flow	Connection Type
☐ Cold Water			
☐ Hot Water			
☐ Pure Water			
☐ Drain			
☐ Vacuum			
☐ Air			
☐ Natural Gas			
☐ Cylinder 1	Gas:		
☐ Cylinder 2	Gas:		
☐ Other			

Electrical Requirements

LOAD
Volts
Phase (1 or 3)
Wire (3, 4 or 5)
KVA
Amps
Watts

SOURCE
☑ Normal Only
☐ Emergency/Standby
☐ Power Quality
☐ Isolated Ground
☐ Dedicated
☐ Conditioned
☐ UPS

CONNECTION
☑ Single Point
☐ Multiple Point
☐ Explosion Proof
☐ Hard Wire
☐ Plug Configuration
☐ Other

Special Requirements

Photo

PROPOSED LAB SUITE: 5.1.1

Equipment Data Sheet

Date: 26-Jan-16

Equipment Item: DRYING OVEN **Quantit** 1
User Name: FRANK J MESSINA
Location (lab/room #): BNR 201
Frequency and type of use YEARLY - RESEARCH
(i.e. daily, weekly, monthly, yearly - teaching, research)

General Information

Manufacturer: FISHER
Model Number: 230G
Size (width" x depth" x height"): 24 X 24 X 36
Weight (lbs): 75
Mount Location: ☐ Floor ☐ Wall ☑ Bench ☐ Ceiling
Mount Type: ☐ Fixed ☑ Movable

Mechanical Requirements

	Notes
☐ Exhaust Duct	
☐ Supply Air	
☐ Chilled Water	
☐ Steam	
☐ Other	
☐ Heat Rejection	BTUs:
☐ Alarm Points	

Plumbing Requirements

	Size	Flow	Connection Type
☐ Cold Water			
☐ Hot Water			
☐ Pure Water			
☐ Drain			
☐ Vacuum			
☐ Air			
☐ Natural Gas			
☐ Cylinder 1	Gas:		
☐ Cylinder 2	Gas:		
☐ Other			

Electrical Requirements

LOAD
Volts
Phase (1 or 3)
Wire (3, 4 or 5)
KVA
Amps
Watts

SOURCE
☑ Normal Only
☐ Emergency/Standby
☐ Power Quality
☐ Isolated Ground
☐ Dedicated
☐ Conditioned
☐ UPS

CONNECTION
☑ Single Point
☐ Multiple Point
☐ Explosion Proof
☐ Hard Wire
☐ Plug Configuration
☐ Other

Special Requirements

Photo

PROPOSED LAB SUITE: 5.1.1

Equipment Data Sheet

Date: ########

Equipment Item: LABORATORY HOOD **Quantit** 1
User Name: FRANK J MESSINA
Location (lab/room #): BNR 201
Frequency and type of use MONTHLY - RESEARCH
(i.e. daily, weekly, monthly, yearly - teaching, research)

General Information

Manufacturer: LABCONCO
Model Number: 48800
Size (width" x depth" x height"): 72 X 60 X 90
Weight (lbs): UNKNOWN
Mount Location: ☑ Floor ☐ Wall ☐ Bench ☐ Ceiling
Mount Type: ☑ Fixed ☐ Movable

Mechanical Requirements

	Notes
☑ Exhaust Duct	
☑ Supply Air	
☐ Chilled Water	
☐ Steam	
☐ Other	
☐ Heat Rejection	BTUs:
☐ Alarm Points	

Plumbing Requirements

	Size	Flow	Connection Type
☐ Cold Water			
☐ Hot Water			
☐ Pure Water			
☐ Drain			
☑ Vacuum			
☑ Air			
☐ Natural Gas			
☐ Cylinder 1	Gas:		
☐ Cylinder 2	Gas:		
☐ Other			

Electrical Requirements

LOAD
Volts
Phase (1 or 3)
Wire (3, 4 or 5)
KVA
Amps
Watts

SOURCE
☑ Normal Only
☐ Emergency/Standby
☐ Power Quality
☐ Isolated Ground
☐ Dedicated
☐ Conditioned
☐ UPS

CONNECTION
☐ Single Point
☐ Multiple Point
☐ Explosion Proof
☑ Hard Wire
☐ Plug Configuration
☐ Other

Special Requirements

Photo

Equipment Data Sheet

Date: 1-26-16

Equipment Item: Freezer **Quantity:** 1

User Name: UPPDL

Location (lab/room #): BNR 203

Frequency and type of use Constant: Cold Storage
(i.e. daily, weekly, monthly, yearly - teaching, research)

General Information

Manufacturer: Crosley
Model Number: WCV 15P/C

Size (width" x depth" x height"): 3'X 3'X 5'
Weight (lbs): 200 lbs ?
Mount Location: ☒ Floor ☐ Wall ☐ Bench ☐ Ceiling
Mount Type: ☐ Fixed ☐ Movable

Mechanical Requirements

	Notes
☐ Exhaust Duct	
☐ Supply Air	
☐ Chilled Water	
☐ Steam	
☐ Other	
☐ Heat Rejection	BTUs:
☐ Alarm Points	

Plumbing Requirements

	Size	Flow	Connection Type
☐ Cold Water			
☐ Hot Water			
☐ Pure Water			
☐ Drain			
☐ Vacuum			
☐ Air			
☐ Natural Gas			
☐ Cylinder 1	Gas:		
☐ Cylinder 2	Gas:		
☐ Other			

Electrical Requirements

LOAD
Volts 110?
Phase (1 or 3)
Wire (3, 4 or 5)
KVA
Amps
Watts

SOURCE
☒ Normal Only
☒ Emergency/Standby
☐ Power Quality
☐ Isolated Ground
☐ Dedicated
☐ Conditioned
☐ UPS

CONNECTION
☒ Single Point
☐ Multiple Point
☐ Explosion Proof
☐ Hard Wire
☐ Plug Configuration
☐ Other

Special Requirements

Photo

PLANT PEST DIAGNOSTIC LAB

Equipment Data Sheet

Date: 1-26-16

Equipment Item: Lab hood **Quantity:** 1

User Name: Ryan Davis: Utah Plant Pest Diagnostic Plan

Location (lab/room #): BNR 203

Frequency and type of use (i.e. daily, weekly, monthly, yearly - teaching, research): Infrequent: Pathology

General Information

Manufacturer: Integrated Air Systems

Model Number: NA

Size (width" x depth" x height"): 6' X 3.5' X 4.5'

Weight (lbs): ? A few hundred lbs ?

Mount Location: ☒ Floor ☐ Wall ☐ Bench ☐ Ceiling

Mount Type: ☐ Fixed ☒ Movable

Mechanical Requirements

	Notes
☒ Exhaust Duct	
☒ Supply Air	
☐ Chilled Water	
☐ Steam	
☒ Other	GAS
☐ Heat Rejection	BTUs:
☐ Alarm Points	

Plumbing Requirements

	Size	Flow	Connection Type
☐ Cold Water			
☐ Hot Water			
☐ Pure Water			
☐ Drain			
☒ Vacuum			
☒ Air			
☒ Natural Gas			
☐ Cylinder 1	Gas:		
☐ Cylinder 2	Gas:		
☐ Other			

Electrical Requirements

LOAD

Volts
Phase (1 or 3)
Wire (3, 4 or 5)
KVA
Amps
Watts

SOURCE

☐ Normal Only
☐ Emergency/Standby
☐ Power Quality
☐ Isolated Ground
☐ Dedicated
☐ Conditioned
☐ UPS

CONNECTION

☐ Single Point
☐ Multiple Point
☐ Explosion Proof
☐ Hard Wire
☐ Plug Configuration
☐ Other

Special Requirements

Photo

PLANT PEST DIAGNOSTIC LAB

Equipment Data Sheet

Date: 1-26-16

Equipment Item: Hood/vent **Quantity:** 1

User Name: UPPDL

Location (lab/room #): BNR 203

Frequency and type of use Infrequent: Chemical mixing
(i.e. daily, weekly, monthly, yearly - teaching, research)

General Information

Manufacturer: Hamilton
Model Number: ?

Size (width" x depth" x height"): 3' X 5' X 8'
Weight (lbs): Heavy ?
Mount Location: ☒ Floor ☒ Wall ☐ Bench ☒ Ceiling
Mount Type: ☒ Fixed ☐ Movable

Mechanical Requirements

	Notes
☒ Exhaust Duct	
☒ Supply Air	
☐ Chilled Water	
☐ Steam	
☐ Other	
☐ Heat Rejection	BTUs:
☐ Alarm Points	

Plumbing Requirements

	Size	Flow	Connection Type
☒ Cold Water			
☒ Hot Water			
☐ Pure Water			
☐ Drain			
☒ Vacuum			
☒ Air			
☒ Natural Gas			
☐ Cylinder 1	Gas:		
☐ Cylinder 2	Gas:		
☐ Other			

Electrical Requirements

LOAD

Volts 120 / 240
Phase (1 or 3)
Wire (3, 4 or 5)
KVA
Amps
Watts

SOURCE

☒ Normal Only
☐ Emergency/Standby
☐ Power Quality
☐ Isolated Ground
☐ Dedicated
☐ Conditioned
☐ UPS

CONNECTION

☐ Single Point 2
☐ Multiple Point
☐ Explosion Proof
☐ Hard Wire
☐ Plug Configuration
☐ Other

Special Requirements

Photo

=PLANT PEST DIAGNOSTIC LAB

Equipment Data Sheet

Date: 1-26-16

Equipment Item: Incubator **Quantity:** 1

User Name: UPPDL

Location (lab/room #): BNR 203

Frequency and type of use Constant + Cold storage
(i.e. daily, weekly, monthly, yearly - teaching, research)

General Information

Manufacturer: Percival
Model Number: ?
Size (width" x depth" x height"): 3' x 3' x 6'
Weight (lbs): 200 lbs
Mount Location: ☒ Floor ☐ Wall ☐ Bench ☐ Ceiling
Mount Type: ☐ Fixed ☐ Movable

Mechanical Requirements

	Notes
☐ Exhaust Duct	
☐ Supply Air	
☐ Chilled Water	
☐ Steam	
☐ Other	
☐ Heat Rejection	BTUs:
☐ Alarm Points	

Plumbing Requirements

	Size	Flow	Connection Type
☐ Cold Water			
☐ Hot Water			
☐ Pure Water			
☐ Drain			
☐ Vacuum			
☐ Air			
☐ Natural Gas			
☐ Cylinder 1	Gas:		
☐ Cylinder 2	Gas:		
☐ Other			

Electrical Requirements

LOAD
Volts 110
Phase (1 or 3)
Wire (3, 4 or 5)
KVA
Amps
Watts

SOURCE
☒ Normal Only
☒ Emergency/Standby
☐ Power Quality
☐ Isolated Ground
☐ Dedicated
☐ Conditioned
☐ UPS

CONNECTION
☒ Single Point
☐ Multiple Point
☐ Explosion Proof
☐ Hard Wire
☐ Plug Configuration
☐ Other

Special Requirements

Photo

PLANT PEST DIAGNOSTIC LAB

Equipment Data Sheet

Date: 1-26-16

Equipment Item: Incubator **Quantity:** 1
User Name: UPPDL
Location (lab/room #): BNR 203
Frequency and type of use Constant - Cold Storage
(i.e. daily, weekly, monthly, yearly - teaching, research)

General Information

Manufacturer: Precision Scientific
Model Number: Low Temp Incubator 815
Size (width" x depth" x height"): 3' x 3' x 6'
Weight (lbs): 200 lbs ?
Mount Location: ☒ Floor ☐ Wall ☐ Bench ☐ Ceiling
Mount Type: ☐ Fixed ☐ Movable

Mechanical Requirements

	Notes
☐ Exhaust Duct	
☐ Supply Air	
☐ Chilled Water	
☐ Steam	
☐ Other	
☐ Heat Rejection	BTUs:
☐ Alarm Points	

Plumbing Requirements

	Size	Flow	Connection Type
☐ Cold Water			
☐ Hot Water			
☐ Pure Water			
☐ Drain			
☐ Vacuum			
☐ Air			
☐ Natural Gas			
☐ Cylinder 1	Gas:		
☐ Cylinder 2	Gas:		
☐ Other			

Electrical Requirements

LOAD
Volts 110 ?
Phase (1 or 3)
Wire (3, 4 or 5)
KVA
Amps
Watts

SOURCE
☒ Normal Only
☒ Emergency/Standby
☐ Power Quality
☐ Isolated Ground
☐ Dedicated
☐ Conditioned
☐ UPS

CONNECTION
☒ Single Point
☐ Multiple Point
☐ Explosion Proof
☐ Hard Wire
☐ Plug Configuration
☐ Other

Special Requirements

Photo

PLANT PEST DIAGNOSTIC LAB

Equipment Data Sheet

Date: 1-26-16

Equipment Item: Refrigerator **Quantity:** 1

User Name: UPPDL

Location (lab/room #): BNR 203

Frequency and type of use Often : Cold Storage
(i.e. daily, weekly, monthly, yearly - teaching, research)

General Information

Manufacturer Whirlpool
Model Number ?

Size (width" x depth" x height") 3' x 3' x 5.5'
Weight (lbs) 150 lbs ??
Mount Location ☒ Floor ☐ Wall ☐ Bench ☐ Ceiling
Mount Type ☐ Fixed ☒ Movable

Mechanical Requirements

	Notes
☐ Exhaust Duct	
☐ Supply Air	
☐ Chilled Water	
☐ Steam	
☐ Other	
☐ Heat Rejection	BTUs:
☐ Alarm Points	

Plumbing Requirements

	Size	Flow	Connection Type
☐ Cold Water			
☐ Hot Water			
☐ Pure Water			
☐ Drain			
☐ Vacuum			
☐ Air			
☐ Natural Gas			
☐ Cylinder 1	Gas:		
☐ Cylinder 2	Gas:		
☐ Other			

Electrical Requirements

LOAD
Volts 110
Phase (1 or 3)
Wire (3, 4 or 5)
KVA
Amps
Watts

SOURCE
☒ Normal Only
☒ Emergency/Standby
☐ Power Quality
☐ Isolated Ground
☐ Dedicated
☐ Conditioned
☐ UPS

CONNECTION
☒ Single Point
☐ Multiple Point
☐ Explosion Proof
☐ Hard Wire
☐ Plug Configuration
☐ Other

Special Requirements

Photo

PROPOSED LAB SUITE: 5.1.8

Equipment Data Sheet

Date ########

Equipment Item: Microscopes **Quantit** 1
User Name: Claudia Nischwitz
Location (lab/room #): BNR 238
Frequency and type of use daily
(i.e. daily, weekly, monthly, yearly - teaching, research)

General Information

Manufacturer Zeiss
Model Number
Size (width" x depth" x height") 28x28x26
Weight (lbs)
Mount Location ☐ Floor ☐ Wall ☑ Bench ☐ Ceiling
Mount Type ☐ Fixed ☑ Movable

Mechanical Requirements

	Notes
☐ Exhaust Duct	
☐ Supply Air	
☐ Chilled Water	
☐ Steam	
☐ Other	
☐ Heat Rejection	BTUs:
☐ Alarm Points	

Plumbing Requirements

	Size	Flow	Connection Type
☐ Cold Water			
☐ Hot Water			
☐ Pure Water			
☐ Drain			
☐ Vacuum			
☐ Air			
☐ Natural Gas			
☐ Cylinder 1	Gas:		
☐ Cylinder 2	Gas:		
☐ Other			

Electrical Requirements

LOAD
Volts
Phase (1 or 3)
Wire (3, 4 or 5)
KVA
Amps
Watts

SOURCE
☑ Normal Only
☐ Emergency/Standby
☐ Power Quality
☐ Isolated Ground
☐ Dedicated
☐ Conditioned
☐ UPS

CONNECTION
☑ Single Point
☐ Multiple Point
☐ Explosion Proof
☐ Hard Wire
☐ Plug Configuration
☐ Other

Special Requirements

Photo

PROPOSED LAB SUITE: 5.1.8

Equipment Data Sheet

Date:

Equipment Item: disecting microscope **Quantit** 1
User Name: Claudia Nischwitz
Location (lab/room #): BNR 238
Frequency and type of use daily
(i.e. daily, weekly, monthly, yearly - teaching, research)

General Information

Manufacturer Zeiss
Model Number
Size (width" x depth" x height") 24x24x22
Weight (lbs)
Mount Location ☐ Floor ☐ Wall ☑ Bench ☐ Ceiling
Mount Type ☐ Fixed ☑ Movable

Mechanical Requirements

	Notes
☐ Exhaust Duct	
☐ Supply Air	
☐ Chilled Water	
☐ Steam	
☐ Other	
☐ Heat Rejection	BTUs:
☐ Alarm Points	

Plumbing Requirements

	Size	Flow	Connection Type
☐ Cold Water			
☐ Hot Water			
☐ Pure Water			
☐ Drain			
☐ Vacuum			
☐ Air			
☐ Natural Gas			
☐ Cylinder 1	Gas:		
☐ Cylinder 2	Gas:		
☐ Other			

Electrical Requirements

LOAD
Volts
Phase (1 or 3)
Wire (3, 4 or 5)
KVA
Amps
Watts

SOURCE
☑ Normal Only
☐ Emergency/Standby
☐ Power Quality
☐ Isolated Ground
☐ Dedicated
☐ Conditioned
☐ UPS

CONNECTION
☑ Single Point
☐ Multiple Point
☐ Explosion Proof
☐ Hard Wire
☐ Plug Configuration
☐ Other

Special Requirements

Photo

PROPOSED LAB SUITE: 5.1.8

Equipment Data Sheet

Date:

Equipment Item: Gel electrophoresis system (consists of several pieces) **Quantit** 1
User Name: Claudia Nischwitz
Location (lab/room #): BNR 238
Frequency and type of use daily
(i.e. daily, weekly, monthly, yearly - teaching, research)

General Information

Manufacturer various
Model Number
Size (width" x depth" x height") 54x24x12
Weight (lbs)
Mount Location ☐ Floor ☐ Wall ☑ Bench ☐ Ceiling
Mount Type ☐ Fixed ☑ Movable

Mechanical Requirements

	Notes
☐ Exhaust Duct	
☐ Supply Air	
☐ Chilled Water	
☐ Steam	
☐ Other	
☐ Heat Rejection	BTUs:
☐ Alarm Points	

Plumbing Requirements

	Size	Flow	Connection Type
☐ Cold Water			
☐ Hot Water			
☐ Pure Water			
☐ Drain			
☐ Vacuum			
☐ Air			
☐ Natural Gas			
☐ Cylinder 1	Gas:		
☐ Cylinder 2	Gas:		
☐ Other			

Electrical Requirements

LOAD
Volts
Phase (1 or 3)
Wire (3, 4 or 5)
KVA
Amps
Watts

SOURCE
☑ Normal Only
☐ Emergency/Standby
☐ Power Quality
☐ Isolated Ground
☐ Dedicated
☐ Conditioned
☐ UPS

CONNECTION
☑ Single Point
☐ Multiple Point
☐ Explosion Proof
☐ Hard Wire
☐ Plug Configuration
☐ Other

Special Requirements

Photo

PROPOSED LAB SUITE: 5.1.8

Equipment Data Sheet

Date:

Equipment Item: Gel imaging system (several pieces) **Quantit** 1
User Name: Claudia Nischwitz
Location (lab/room #): BNR 238
Frequency and type of use daily
(i.e. daily, weekly, monthly, yearly - teaching, research)

General Information

Manufacturer
Model Number
Size (width" x depth" x height") 72x24x35
Weight (lbs)
Mount Location ☐ Floor ☐ Wall ☑ Bench ☐ Ceiling
Mount Type ☐ Fixed ☑ Movable

Mechanical Requirements

	Notes
☐ Exhaust Duct	
☐ Supply Air	
☐ Chilled Water	
☐ Steam	
☐ Other	
☐ Heat Rejection	BTUs:
☐ Alarm Points	

Plumbing Requirements

	Size	Flow	Connection Type
☐ Cold Water			
☐ Hot Water			
☐ Pure Water			
☐ Drain			
☐ Vacuum			
☐ Air			
☐ Natural Gas			
☐ Cylinder 1	Gas:		
☐ Cylinder 2	Gas:		
☐ Other			

Electrical Requirements

LOAD
Volts
Phase (1 or 3)
Wire (3, 4 or 5)
KVA
Amps
Watts

SOURCE
☑ Normal Only
☐ Emergency/Standby
☐ Power Quality
☐ Isolated Ground
☐ Dedicated
☐ Conditioned
☐ UPS

CONNECTION
☑ Single Point
☐ Multiple Point
☐ Explosion Proof
☐ Hard Wire
☐ Plug Configuration
☐ Other

Special Requirements

Photo

PROPOSED LAB SUITE: 5.1.8

Equipment Data Sheet

Date:

Equipment Item: Thermocyclers **Quantit** 2
User Name: Claudia Nischwitz
Location (lab/room #): BNR 238
Frequency and type of use Daily
(i.e. daily, weekly, monthly, yearly - teaching, research)

General Information

Manufacturer: Techne
Model Number:
Size (width" x depth" x height"): 18x18x19
Weight (lbs):
Mount Location: ☐ Floor ☐ Wall ☑ Bench ☐ Ceiling
Mount Type: ☐ Fixed ☑ Movable

Mechanical Requirements

	Notes
☐ Exhaust Duct	
☐ Supply Air	
☐ Chilled Water	
☐ Steam	
☐ Other	
☐ Heat Rejection	BTUs:
☐ Alarm Points	

Plumbing Requirements

	Size	Flow	Connection Type
☐ Cold Water			
☐ Hot Water			
☐ Pure Water			
☐ Drain			
☐ Vacuum			
☐ Air			
☐ Natural Gas			
☐ Cylinder 1	Gas:		
☐ Cylinder 2	Gas:		
☐ Other			

Electrical Requirements

LOAD
Volts
Phase (1 or 3)
Wire (3, 4 or 5)
KVA
Amps
Watts

SOURCE
☑ Normal Only
☐ Emergency/Standby
☐ Power Quality
☐ Isolated Ground
☐ Dedicated
☐ Conditioned
☐ UPS

CONNECTION
☑ Single Point
☐ Multiple Point
☐ Explosion Proof
☐ Hard Wire
☐ Plug Configuration
☐ Other

Special Requirements

Photo

PROPOSED LAB SUITE: 5.1.8

Equipment Data Sheet

Date:

Equipment Item: Plate washer **Quantit** 1
User Name:
Location (lab/room #):
Frequency and type of use weekly
(i.e. daily, weekly, monthly, yearly - teaching, research)

General Information

Manufacturer: Biotek
Model Number:
Size (width" x depth" x height"): 50x24x17
Weight (lbs):
Mount Location: ☐ Floor ☐ Wall ☑ Bench ☐ Ceiling
Mount Type: ☐ Fixed ☑ Movable

Mechanical Requirements

	Notes
☐ Exhaust Duct	
☐ Supply Air	
☐ Chilled Water	
☐ Steam	
☐ Other	
☐ Heat Rejection	BTUs:
☐ Alarm Points	

Plumbing Requirements

	Size	Flow	Connection Type
☐ Cold Water			
☐ Hot Water			
☐ Pure Water			
☐ Drain			
☐ Vacuum			
☐ Air			
☐ Natural Gas			
☐ Cylinder 1	Gas:		
☐ Cylinder 2	Gas:		
☐ Other			

Electrical Requirements

LOAD
Volts
Phase (1 or 3)
Wire (3, 4 or 5)
KVA
Amps
Watts

SOURCE
☑ Normal Only
☐ Emergency/Standby
☐ Power Quality
☐ Isolated Ground
☐ Dedicated
☐ Conditioned
☐ UPS

CONNECTION
☑ Single Point
☐ Multiple Point
☐ Explosion Proof
☐ Hard Wire
☐ Plug Configuration
☐ Other

Special Requirements

Photo

PROPOSED LAB SUITE: 5.1.8

Equipment Data Sheet

Date:

Equipment Item: Plate reader plus computer **Quantit** 1
User Name: Claufdia Nischwitz
Location (lab/room #): BNR 238
Frequency and type of use weekly
(i.e. daily, weekly, monthly, yearly - teaching, research)

General Information

Manufacturer: Biotek
Model Number:
Size (width" x depth" x height"): 54x24x20
Weight (lbs):
Mount Location: ☐ Floor ☐ Wall ☑ Bench ☐ Ceiling
Mount Type: ☐ Fixed ☑ Movable

Mechanical Requirements

	Notes
☐ Exhaust Duct	
☐ Supply Air	
☐ Chilled Water	
☐ Steam	
☐ Other	
☐ Heat Rejection	BTUs:
☐ Alarm Points	

Plumbing Requirements

	Size	Flow	Connection Type
☐ Cold Water			
☐ Hot Water			
☐ Pure Water			
☐ Drain			
☐ Vacuum			
☐ Air			
☐ Natural Gas			
☐ Cylinder 1	Gas:		
☐ Cylinder 2	Gas:		
☐ Other			

Electrical Requirements

LOAD
Volts
Phase (1 or 3)
Wire (3, 4 or 5)
KVA
Amps
Watts

SOURCE
☑ Normal Only
☐ Emergency/Standby
☐ Power Quality
☐ Isolated Ground
☐ Dedicated
☐ Conditioned
☐ UPS

CONNECTION
☑ Single Point
☐ Multiple Point
☐ Explosion Proof
☐ Hard Wire
☐ Plug Configuration
☐ Other

Special Requirements

Photo

PROPOSED LAB SUITE: 5.1.8

Equipment Data Sheet

Date:

Equipment Item: Spectrophotmeter - nanodrop plus computer **Quantit** 1
User Name:
Location (lab/room #):
Frequency and type of use
(i.e. daily, weekly, monthly, yearly - teaching, research)

General Information

Manufacturer: Thermofisher
Model Number:
Size (width" x depth" x height"): 43x24 x20
Weight (lbs):
Mount Location: ☐ Floor ☐ Wall ☑ Bench ☐ Ceiling
Mount Type: ☐ Fixed ☑ Movable

Mechanical Requirements

	Notes
☐ Exhaust Duct	
☐ Supply Air	
☐ Chilled Water	
☐ Steam	
☐ Other	
☐ Heat Rejection	BTUs:
☐ Alarm Points	

Plumbing Requirements

	Size	Flow	Connection Type
☐ Cold Water			
☐ Hot Water			
☐ Pure Water			
☐ Drain			
☐ Vacuum			
☐ Air			
☐ Natural Gas			
☐ Cylinder 1	Gas:		
☐ Cylinder 2	Gas:		
☐ Other			

Electrical Requirements

LOAD
Volts
Phase (1 or 3)
Wire (3, 4 or 5)
KVA
Amps
Watts

SOURCE
☑ Normal Only
☐ Emergency/Standby
☐ Power Quality
☐ Isolated Ground
☐ Dedicated
☐ Conditioned
☐ UPS

CONNECTION
☑ Single Point
☐ Multiple Point
☐ Explosion Proof
☐ Hard Wire
☐ Plug Configuration
☐ Other

Special Requirements

Photo

PROPOSED LAB SUITE: 5.1.8

Equipment Data Sheet

Date:

Equipment Item: Incubators **Quantit** 2
User Name: Claudia NIschwitz
Location (lab/room #): BNR 238
Frequency and type of use daily
(i.e. daily, weekly, monthly, yearly - teaching, research)

General Information

Manufacturer: Percival
Model Number:
Size (width" x depth" x height"): 34x34x78
Weight (lbs):
Mount Location: ☑ Floor ☐ Wall ☐ Bench ☐ Ceiling
Mount Type: ☐ Fixed ☑ Movable

Mechanical Requirements

	Notes
☐ Exhaust Duct	
☐ Supply Air	
☐ Chilled Water	
☐ Steam	
☐ Other	
☐ Heat Rejection	BTUs:
☐ Alarm Points	

Plumbing Requirements

	Size	Flow	Connection Type
☐ Cold Water			
☐ Hot Water			
☐ Pure Water			
☑ Drain			
☐ Vacuum			
☐ Air			
☐ Natural Gas			
☐ Cylinder 1	Gas:		
☐ Cylinder 2	Gas:		
☐ Other			

Electrical Requirements

LOAD
Volts
Phase (1 or 3)
Wire (3, 4 or 5)
KVA
Amps
Watts

SOURCE
☑ Normal Only
☑ Emergency/Standby
☐ Power Quality
☐ Isolated Ground
☐ Dedicated
☐ Conditioned
☐ UPS

CONNECTION
☑ Single Point
☐ Multiple Point
☐ Explosion Proof
☐ Hard Wire
☐ Plug Configuration
☐ Other

Special Requirements

Photo

PROPOSED LAB SUITE: 5.1.8

Equipment Data Sheet

Date:

Equipment Item: ultralow freezer **Quantit** 1
User Name: Claudia Nischwitz
Location (lab/room #): BNR 238
Frequency and type of use daily
(i.e. daily, weekly, monthly, yearly - teaching, research)

General Information

Manufacturer: Revco
Model Number:
Size (width" x depth" x height"): 29x38x76
Weight (lbs):
Mount Location: ☑ Floor ☐ Wall ☐ Bench ☐ Ceiling
Mount Type: ☐ Fixed ☑ Movable

Mechanical Requirements

	Notes
☐ Exhaust Duct	
☐ Supply Air	
☐ Chilled Water	
☐ Steam	
☐ Other	
☐ Heat Rejection	BTUs:
☐ Alarm Points	

Plumbing Requirements

	Size	Flow	Connection Type
☐ Cold Water			
☐ Hot Water			
☐ Pure Water			
☐ Drain			
☐ Vacuum			
☐ Air			
☐ Natural Gas			
☐ Cylinder 1	Gas:		
☐ Cylinder 2	Gas:		
☐ Other			

Electrical Requirements

LOAD
Volts
Phase (1 or 3)
Wire (3, 4 or 5)
KVA
Amps
Watts

SOURCE
☑ Normal Only
☑ Emergency/Standby
☐ Power Quality
☐ Isolated Ground
☐ Dedicated
☐ Conditioned
☐ UPS

CONNECTION
☑ Single Point
☐ Multiple Point
☐ Explosion Proof
☐ Hard Wire
☐ Plug Configuration
☐ Other

Special Requirements

Photo

PROPOSED LAB SUITE: 5.1.8

Equipment Data Sheet

Date: 12/15/15
Equipment Item: up right freezer **Quantity:** 1
User Name: Claudia Nischwitz
Location (lab/room #): BNR 238
Frequency and type of use daily
(i.e. daily, weekly, monthly, yearly - teaching, research)

General Information

Manufacturer: Thermo Fisher
Model Number:
Size (width" x depth" x height"): 32x32x68
Weight (lbs):
Mount Location: Floor Wall Bench Ceiling
Mount Type: Fixed Movable

Mechanical Requirements

	Notes
( ) Steam	
Exhaust Duct	
Supply Air	
Chilled Water	
Steam	
Other	
Heat Rejection	BTUs:
Alarm Points	

Plumbing Requirements

	Size	Flow	Connection Type
Cold Water			
Hot Water			
Pure Water			
Drain			
Vacuum			
Air			
Natural Gas			
Cylinder 1	Gas:		
Cylinder 2	Gas:		
Other			

Electrical Requirements

LOAD		SOURCE		CONNECTION	
Volts		x	Normal Only	x	Single Point
Phase (1 or 3)			Emergency/Standby		Multiple Point
Wire (3, 4 or 5)			Power Quality		Explosion Proof
KVA			Isolated Ground		Hard Wire
Amps			Dedicated		Plug Configuration
Watts			Conditioned		
			UPS		Other

Special Requirements

Photo

PROPOSED LAB SUITE: 5.1.8

Equipment Data Sheet

Date: 12/15/15
Equipment Item: chest freezer **Quantity:** 1
User Name: Claudia Nischwitz
Location (lab/room #): BNR 238
Frequency and type of use daily
(i.e. daily, weekly, monthly, yearly - teaching, research)

General Information

Manufacturer:
Model Number:
Size (width" x depth" x height"): 47x30x35
Weight (lbs):
Mount Location: Floor Wall Bench Ceiling
Mount Type: Fixed Movable

Mechanical Requirements

	Notes
( ) Steam	
Exhaust Duct	
Supply Air	
Chilled Water	
Steam	
Other	
Heat Rejection	BTUs:
Alarm Points	

Plumbing Requirements

	Size	Flow	Connection Type
Cold Water			
Hot Water			
Pure Water			
Drain			
Vacuum			
Air			
Natural Gas			
Cylinder 1	Gas:		
Cylinder 2	Gas:		
Other			

Electrical Requirements

LOAD		SOURCE		CONNECTION	
Volts		x	Normal Only	x	Single Point
Phase (1 or 3)			Emergency/Standby		Multiple Point
Wire (3, 4 or 5)			Power Quality		Explosion Proof
KVA			Isolated Ground		Hard Wire
Amps			Dedicated		Plug Configuration
Watts			Conditioned		
			UPS		Other

Special Requirements

Photo

PROPOSED LAB SUITE: 5.1.8

Equipment Data Sheet

Date: 12/15/15

Equipment Item: fridge/freezer **Quantity:** 1
User Name: Claudia Nischwitz
Location (lab/room #): BNR 238
Frequency and type of use daily
(i.e. daily, weekly, monthly, yearly - teaching, research)

General Information

Manufacturer
Model Number

Size (width" x depth" x height") 32x32x68
Weight (lbs)
Mount Location Floor Wall Bench Ceiling
Mount Type Fixed Movable

Mechanical Requirements

		Notes
( ) Steam		
Exhaust Duct		
Supply Air		
Chilled Water		
Steam		
Other		
Heat Rejection	BTUs:	
Alarm Points		

Plumbing Requirements

	Size	Flow	Connection Type
Cold Water			
Hot Water			
Pure Water			
Drain			
Vacuum			
Air			
Natural Gas			
Cylinder 1	Gas:		
Cylinder 2	Gas:		
Other			

Electrical Requirements

LOAD		SOURCE		CONNECTION	
Volts		x	Normal Only	x	Single Point
Phase (1 or 3)			Emergency/Standby		Multiple Point
Wire (3, 4 or 5)			Power Quality		Explosion Proof
KVA			Isolated Ground		Hard Wire
Amps			Dedicated		Plug Configuration
Watts			Conditioned		
			UPS		Other

Special Requirements

Photo

PROPOSED LAB SUITE: 5.1.8

Equipment Data Sheet

Date: 12/15/15

Equipment Item: Microscope **Quantity:** 1
User Name: Claudia Nischwitz
Location (lab/room #): BNR 238
Frequency and type of use daily
(i.e. daily, weekly, monthly, yearly - teaching, research)

General Information

Manufacturer Meiji
Model Number

Size (width" x depth" x height") 24x12x17
Weight (lbs)
Mount Location Floor Wall Bench Ceiling
Mount Type Fixed Movable

Mechanical Requirements

		Notes
( ) Steam		
Exhaust Duct		
Supply Air		
Chilled Water		
Steam		
Other		
Heat Rejection	BTUs:	
Alarm Points		

Plumbing Requirements

	Size	Flow	Connection Type
Cold Water			
Hot Water			
Pure Water			
Drain			
Vacuum			
Air			
Natural Gas			
Cylinder 1	Gas:		
Cylinder 2	Gas:		
Other			

Electrical Requirements

LOAD		SOURCE		CONNECTION	
Volts		x	Normal Only	x	Single Point
Phase (1 or 3)			Emergency/Standby		Multiple Point
Wire (3, 4 or 5)			Power Quality		Explosion Proof
KVA			Isolated Ground		Hard Wire
Amps			Dedicated		Plug Configuration
Watts			Conditioned		
			UPS		Other

Special Requirements

Photo

PROPOSED LAB SUITE: 5.1.8

Equipment Data Sheet

Date: 12/15/15

Equipment Item: UV light table **Quantity:** 1
User Name: Claudia Nischwitz
Location (lab/room #): BNR 238
Frequency and type of use weekly
(i.e. daily, weekly, monthly, yearly - teaching, research)

General Information

Manufacturer VWR
Model Number

Size (width" x depth" x height") 13x16x5
Weight (lbs)
Mount Location Floor Wall Bench Ceiling
Mount Type Fixed Movable

Mechanical Requirements

	Notes
( ) Steam	
Exhaust Duct	
Supply Air	
Chilled Water	
Steam	
Other	
Heat Rejection	BTUs:
Alarm Points	

Plumbing Requirements

	Size	Flow	Connection Type
Cold Water			
Hot Water			
Pure Water			
Drain			
Vacuum			
Air			
Natural Gas			
Cylinder 1	Gas:		
Cylinder 2	Gas:		
Other			

Electrical Requirements

LOAD		SOURCE		CONNECTION	
Volts		x	Normal Only	x	Single Point
Phase (1 or 3)			Emergency/Standby		Multiple Point
Wire (3, 4 or 5)			Power Quality		Explosion Proof
KVA			Isolated Ground		Hard Wire
Amps			Dedicated		Plug Configuration
Watts			Conditioned		
			UPS		Other

Special Requirements

Photo

PROPOSED LAB SUITE: 5.1.8

Equipment Data Sheet

Date 08 Dece,ber 2015

Equipment Item: Low-temp freezer **Quantit** 1
User Name: Herbarium
Location (lab/room #): Junction
Frequency and type of use daily - research
(i.e. daily, weekly, monthly, yearly - teaching, research)

General Information

Manufacturer
Model Number

Size (width" x depth" x height") 33" x 38" x 67"
Weight (lbs) ~200 lbs
Mount Location ☑ Floor ☐ Wall ☐ Bench ☐ Ceiling
Mount Type ☐ Fixed ☑ Movable

Mechanical Requirements

	Notes
☐ Exhaust Duct	
☐ Supply Air	
☐ Chilled Water	
☐ Steam	
☐ Other	
☐ Heat Rejection	BTUs:
☐ Alarm Points	

Plumbing Requirements

	Size	Flow	Connection Type
☐ Cold Water			
☐ Hot Water			
☐ Pure Water			
☐ Drain			
☐ Vacuum			
☐ Air			
☐ Natural Gas			
☐ Cylinder 1	Gas:		
☐ Cylinder 2	Gas:		
☐ Other			

Electrical Requirements

LOAD	SOURCE	CONNECTION
Volts	☑ Normal Only	☑ Single Point
Phase (1 or 3)	☐ Emergency/Standby	☐ Multiple Point
Wire (3, 4 or 5)	☐ Power Quality	☐ Explosion Proof
KVA	☐ Isolated Ground	☐ Hard Wire
Amps	☐ Dedicated	☐ Plug Configuration
Watts	☐ Conditioned	
	☐ UPS	☐ Other

Special Requirements

Photo

HERBARIUM: 8.1

Equipment Data Sheet

Date 8-Dec-15

Equipment Item: Refridgerator/freezer **Quantit** 1
User Name: Herbarium
Location (lab/room #): Junction
Frequency and type of use weekly - research
(i.e. daily, weekly, monthly, yearly - teaching, research)

General Information

Manufacturer: Magic Chef - Frost Free
Model Number:
Size (width" x depth" x height"): 30" x 35" x 65"
Weight (lbs): ~150 lbs
Mount Location: ☑ Floor ☐ Wall ☐ Bench ☐ Ceiling
Mount Type: ☐ Fixed ☑ Movable

Mechanical Requirements

	Notes
☐ Exhaust Duct	
☐ Supply Air	
☐ Chilled Water	
☐ Steam	
☐ Other	
☐ Heat Rejection	BTUs:
☐ Alarm Points	

Plumbing Requirements

	Size	Flow	Connection Type
☐ Cold Water			
☐ Hot Water			
☐ Pure Water			
☐ Drain			
☐ Vacuum			
☐ Air			
☐ Natural Gas			
☐ Cylinder 1	Gas:		
☐ Cylinder 2	Gas:		
☐ Other			

Electrical Requirements

LOAD
Volts
Phase (1 or 3)
Wire (3, 4 or 5)
KVA
Amps
Watts

SOURCE
☑ Normal Only
☐ Emergency/Standby
☐ Power Quality
☐ Isolated Ground
☐ Dedicated
☐ Conditioned
☐ UPS

CONNECTION
☑ Single Point
☐ Multiple Point
☐ Explosion Proof
☐ Hard Wire
☐ Plug Configuration
☐ Other

Special Requirements

Photo

HERBARIUM: 8.1

Equipment Data Sheet

Date 8-Dec-15

Equipment Item: Plant Press Dryer **Quantit** 1
User Name: Herbarium
Location (lab/room #): Junction
Frequency and type of use Weekly - research
(i.e. daily, weekly, monthly, yearly - teaching, research)

General Information

Manufacturer: built in house
Model Number:
Size (width" x depth" x height"): 98" x 24" x 45"
Weight (lbs): ~150 lbs
Mount Location: ☑ Floor ☐ Wall ☐ Bench ☐ Ceiling
Mount Type: ☐ Fixed ☑ Movable

Mechanical Requirements

	Notes
☐ Exhaust Duct	
☐ Supply Air	
☐ Chilled Water	
☐ Steam	
☐ Other	
☐ Heat Rejection	BTUs:
☐ Alarm Points	

Plumbing Requirements

	Size	Flow	Connection Type
☐ Cold Water			
☐ Hot Water			
☐ Pure Water			
☐ Drain			
☐ Vacuum			
☐ Air			
☐ Natural Gas			
☐ Cylinder 1	Gas:		
☐ Cylinder 2	Gas:		
☐ Other			

Electrical Requirements

LOAD
Volts
Phase (1 or 3)
Wire (3, 4 or 5)
KVA
Amps
Watts

SOURCE
☑ Normal Only
☐ Emergency/Standby
☐ Power Quality
☐ Isolated Ground
☐ Dedicated
☐ Conditioned
☐ UPS

CONNECTION
☑ Single Point
☐ Multiple Point
☐ Explosion Proof
☐ Hard Wire
☐ Plug Configuration
☐ Other

Special Requirements

Photo

HERBARIUM: 8.1

Equipment Data Sheet

Date 8-Dec-15

Equipment Item: Dehydrator **Quantit** 2
User Name: Herbarium
Location (lab/room #): Junction
Frequency and type of use weekly - research
(i.e. daily, weekly, monthly, yearly - teaching, research)

General Information

Manufacturer various
Model Number
Size (width" x depth" x height") 17" x 17" x 15"
Weight (lbs) ~10 lbs
Mount Location ☐ Floor ☐ Wall ☑ Bench ☐ Ceiling
Mount Type ☐ Fixed ☑ Movable

Mechanical Requirements

	Notes
☐ Exhaust Duct	
☐ Supply Air	
☐ Chilled Water	
☐ Steam	
☐ Other	
☐ Heat Rejection	BTUs:
☐ Alarm Points	

Plumbing Requirements

	Size	Flow	Connection Type
☐ Cold Water			
☐ Hot Water			
☐ Pure Water			
☐ Drain			
☐ Vacuum			
☐ Air			
☐ Natural Gas			
☐ Cylinder 1	Gas:		
☐ Cylinder 2	Gas:		
☐ Other			

Electrical Requirements

LOAD
Volts
Phase (1 or 3)
Wire (3, 4 or 5)
KVA
Amps
Watts

SOURCE
☑ Normal Only
☐ Emergency/Standby
☐ Power Quality
☐ Isolated Ground
☐ Dedicated
☐ Conditioned
☐ UPS

CONNECTION
☑ Single Point
☐ Multiple Point
☐ Explosion Proof
☐ Hard Wire
☐ Plug Configuration
☐ Other

Special Requirements

Photo

HERBARIUM: 8.1

Equipment Data Sheet

Date 8-Dec-15

Equipment Item: long-arm disceecting microscope w/light source **Quantit** 7
User Name: Herbarium
Location (lab/room #): Junction
Frequency and type of use weekly to daily - research & publuic outreach
(i.e. daily, weekly, monthly, yearly - teaching, research)

General Information

Manufacturer various
Model Number
Size (width" x depth" x height") 24" x 39" x 26.5"
Weight (lbs) ~15 lbs
Mount Location ☐ Floor ☐ Wall ☑ Bench ☐ Ceiling
Mount Type ☐ Fixed ☑ Movable

Mechanical Requirements

	Notes
☐ Exhaust Duct	
☐ Supply Air	
☐ Chilled Water	
☐ Steam	
☐ Other	
☐ Heat Rejection	BTUs:
☐ Alarm Points	

Plumbing Requirements

	Size	Flow	Connection Type
☐ Cold Water			
☐ Hot Water			
☐ Pure Water			
☐ Drain			
☐ Vacuum			
☐ Air			
☐ Natural Gas			
☐ Cylinder 1	Gas:		
☐ Cylinder 2	Gas:		
☐ Other			

Electrical Requirements

LOAD
Volts
Phase (1 or 3)
Wire (3, 4 or 5)
KVA
Amps
Watts

SOURCE
☑ Normal Only
☐ Emergency/Standby
☐ Power Quality
☐ Isolated Ground
☐ Dedicated
☐ Conditioned
☐ UPS

CONNECTION
☑ Single Point
☐ Multiple Point
☐ Explosion Proof
☐ Hard Wire
☐ Plug Configuration
☐ Other

Special Requirements

Photo

HERBARIUM: 8.1

Equipment Data Sheet

Date 80 December 2015

Equipment Item: Discecting microscope **Quantit** 4
User Name: Herbarium
Location (lab/room #): Junction
Frequency and type of use weekly to daily - research & public outreach
(i.e. daily, weekly, monthly, yearly - teaching, research)

General Information

Manufacturer various
Model Number
Size (width" x depth" x height") 8" x 14" x 15"
Weight (lbs) ~10 lbs
Mount Location ☐ Floor ☐ Wall ☑ Bench ☐ Ceiling
Mount Type ☐ Fixed ☑ Movable

Mechanical Requirements

	Notes
☐ Exhaust Duct	
☐ Supply Air	
☐ Chilled Water	
☐ Steam	
☐ Other	
☐ Heat Rejection	BTUs:
☐ Alarm Points	

Plumbing Requirements

	Size	Flow	Connection Type
☐ Cold Water			
☐ Hot Water			
☐ Pure Water			
☐ Drain			
☐ Vacuum			
☐ Air			
☐ Natural Gas			
☐ Cylinder 1	Gas:		
☐ Cylinder 2	Gas:		
☐ Other			

Electrical Requirements

LOAD	SOURCE	CONNECTION
Volts	☑ Normal Only	☑ Single Point
Phase (1 or 3)	☐ Emergency/Standby	☐ Multiple Point
Wire (3, 4 or 5)	☐ Power Quality	☐ Explosion Proof
KVA	☐ Isolated Ground	☐ Hard Wire
Amps	☐ Dedicated	☐ Plug Configuration
Watts	☐ Conditioned	
	☐ UPS	☐ Other

Special Requirements

Photo

HERBARIUM: 8.1

Equipment Data Sheet

Date 8-Dec-15

Equipment Item: Compound Microscope **Quantit** 1
User Name: Herbarium
Location (lab/room #): Junction
Frequency and type of use weekly - research & public outreach
(i.e. daily, weekly, monthly, yearly - teaching, research)

General Information

Manufacturer Zeiss
Model Number
Size (width" x depth" x height") 11" x 15" x 18.5"
Weight (lbs) ~12 lbs
Mount Location ☐ Floor ☐ Wall ☑ Bench ☐ Ceiling
Mount Type ☐ Fixed ☑ Movable

Mechanical Requirements

	Notes
☐ Exhaust Duct	
☐ Supply Air	
☐ Chilled Water	
☐ Steam	
☐ Other	
☐ Heat Rejection	BTUs:
☐ Alarm Points	

Plumbing Requirements

	Size	Flow	Connection Type
☐ Cold Water			
☐ Hot Water			
☐ Pure Water			
☐ Drain			
☐ Vacuum			
☐ Air			
☐ Natural Gas			
☐ Cylinder 1	Gas:		
☐ Cylinder 2	Gas:		
☐ Other			

Electrical Requirements

LOAD	SOURCE	CONNECTION
Volts	☑ Normal Only	☑ Single Point
Phase (1 or 3)	☐ Emergency/Standby	☐ Multiple Point
Wire (3, 4 or 5)	☐ Power Quality	☐ Explosion Proof
KVA	☐ Isolated Ground	☐ Hard Wire
Amps	☐ Dedicated	☐ Plug Configuration
Watts	☐ Conditioned	
	☐ UPS	☐ Other

Special Requirements

Photo

CRSA PAYETTE

HERBARIUM: 8.1

Equipment Data Sheet

Date 08 December 215

Equipment Item: Camera Stand **Quantit** 2
User Name: Herbarium
Location (lab/room #): Junction
Frequency and type of use Daily - research
(i.e. daily, weekly, monthly, yearly - teaching, research)

General Information

Manufacturer: Various
Model Number:
Size (width" x depth" x height"): 32" x 24" x 42"
Weight (lbs): ~30 lbs
Mount Location: ☐ Floor ☐ Wall ☑ Bench ☐ Ceiling
Mount Type: ☐ Fixed ☑ Movable

Mechanical Requirements

	Notes
☐ Exhaust Duct	
☐ Supply Air	
☐ Chilled Water	
☐ Steam	
☐ Other	
☐ Heat Rejection	BTUs:
☐ Alarm Points	

Plumbing Requirements

	Size	Flow	Connection Type
☐ Cold Water			
☐ Hot Water			
☐ Pure Water			
☐ Drain			
☐ Vacuum			
☐ Air			
☐ Natural Gas			
☐ Cylinder 1	Gas:		
☐ Cylinder 2	Gas:		
☐ Other			

Electrical Requirements

LOAD
Volts
Phase (1 or 3)
Wire (3, 4 or 5)
KVA
Amps
Watts

SOURCE
☐ Normal Only
☐ Emergency/Standby
☐ Power Quality
☐ Isolated Ground
☐ Dedicated
☐ Conditioned
☐ UPS

CONNECTION
☐ Single Point
☐ Multiple Point
☐ Explosion Proof
☐ Hard Wire
☐ Plug Configuration
☐ Other

Special Requirements

Photo

HERBARIUM: 8.1

Equipment Data Sheet

Date 8-Dec-15

Equipment Item: light box **Quantit** 1
User Name: Herbarium
Location (lab/room #): Junction
Frequency and type of use Daily - research
(i.e. daily, weekly, monthly, yearly - teaching, research)

General Information

Manufacturer: Ortech
Model Number: Photo e box plus 1419
Size (width" x depth" x height"): 26" x 20" x 22"
Weight (lbs): ~20 lbs
Mount Location: ☐ Floor ☐ Wall ☑ Bench ☐ Ceiling
Mount Type: ☐ Fixed ☑ Movable

Mechanical Requirements

	Notes
☐ Exhaust Duct	
☐ Supply Air	
☐ Chilled Water	
☐ Steam	
☐ Other	
☐ Heat Rejection	BTUs:
☐ Alarm Points	

Plumbing Requirements

	Size	Flow	Connection Type
☐ Cold Water			
☐ Hot Water			
☐ Pure Water			
☐ Drain			
☐ Vacuum			
☐ Air			
☐ Natural Gas			
☐ Cylinder 1	Gas:		
☐ Cylinder 2	Gas:		
☐ Other			

Electrical Requirements

LOAD
Volts
Phase (1 or 3)
Wire (3, 4 or 5)
KVA
Amps
Watts

SOURCE
☑ Normal Only
☐ Emergency/Standby
☐ Power Quality
☐ Isolated Ground
☐ Dedicated
☐ Conditioned
☐ UPS

CONNECTION
☑ Single Point
☐ Multiple Point
☐ Explosion Proof
☐ Hard Wire
☐ Plug Configuration
☐ Other

Special Requirements

Photo

HERBARIUM: 8.1

Equipment Data Sheet

Date 8-Dec-15

Equipment Item: Light box **Quantit** 1
User Name: Herbarium
Location (lab/room #): Junction
Frequency and type of use Monthly - research
(i.e. daily, weekly, monthly, yearly - teaching, research)

General Information

Manufacturer Ortery
Model Number

Size (width" x depth" x height") 24" x 23" x 29"
Weight (lbs) ~15 lbs
Mount Location ☐ Floor ☐ Wall ☑ Bench ☐ Ceiling
Mount Type ☐ Fixed ☑ Movable

Mechanical Requirements

	Notes
☐ Exhaust Duct	
☐ Supply Air	
☐ Chilled Water	
☐ Steam	
☐ Other	
☐ Heat Rejection	BTUs:
☐ Alarm Points	

Plumbing Requirements

	Size	Flow	Connection Type
☐ Cold Water			
☐ Hot Water			
☐ Pure Water			
☐ Drain			
☐ Vacuum			
☐ Air			
☐ Natural Gas			
☐ Cylinder 1	Gas:		
☐ Cylinder 2	Gas:		
☐ Other			

Electrical Requirements

LOAD
Volts
Phase (1 or 3)
Wire (3, 4 or 5)
KVA
Amps
Watts

SOURCE
☑ Normal Only
☐ Emergency/Standby
☐ Power Quality
☐ Isolated Ground
☐ Dedicated
☐ Conditioned
☐ UPS

CONNECTION
☑ Single Point
☐ Multiple Point
☐ Explosion Proof
☐ Hard Wire
☐ Plug Configuration
☐ Other

Special Requirements

Photo

HERBARIUM: 8.1

Equipment Data Sheet

Date: 8-Dec-15

Equipment Item: Long-arm discecting microscope w/ light source **Quantity:** 1
User Name: Herbarium - Piep
Location (lab/room #): Junction - Herb. Office
Frequency and type of use Weekly - research
(i.e. daily, weekly, monthly, yearly - teaching, research)

General Information

Manufacturer Olympus
Model Number

Size (width" x depth" x height") 12" x 30" x 21"
Weight (lbs) ~25 lbs
Mount Location ☐ Floor ☐ Wall ☑ Bench ☐ Ceiling
Mount Type ☐ Fixed ☑ Movable

Mechanical Requirements

	Notes
☐ Exhaust Duct	
☐ Supply Air	
☐ Chilled Water	
☐ Steam	
☐ Other	
☐ Heat Rejection	BTUs:
☐ Alarm Points	

Plumbing Requirements

	Size	Flow	Connection Type
☐ Cold Water			
☐ Hot Water			
☐ Pure Water			
☐ Drain			
☐ Vacuum			
☐ Air			
☐ Natural Gas			
☐ Cylinder 1	Gas:		
☐ Cylinder 2	Gas:		
☐ Other			

Electrical Requirements

LOAD
Volts
Phase (1 or 3)
Wire (3, 4 or 5)
KVA
Amps
Watts

SOURCE
☑ Normal Only
☐ Emergency/Standby
☐ Power Quality
☐ Isolated Ground
☐ Dedicated
☐ Conditioned
☐ UPS

CONNECTION
☑ Single Point
☐ Multiple Point
☐ Explosion Proof
☐ Hard Wire
☐ Plug Configuration
☐ Other

Special Requirements

Photo

HERBARIUM: 8.1

Equipment Data Sheet

Date: 8-Dec-15
Equipment Item: Compound Microscope
User Name: Herbarium - Piep
Location (lab/room #): Junction - Herb. Office
Frequency and type of use Weekly - research
(i.e. daily, weekly, monthly, yearly - teaching, research)

General Information

Manufacturer: Meiji
Model Number:
Size (width" x depth" x height"): 10" x 13" x 15"
Weight (lbs): ~15 lbs
Mount Location: ☐ Floor ☐ Wall ☑ Bench ☐ Ceiling
Mount Type: ☐ Fixed ☑ Movable

Mechanical Requirements

		Notes
☐	Steam	
	Exhaust Duct	
☐	Supply Air	
☐	Chilled Water	
☐	Steam	
☐	Other	
☐	Heat Rejection	BTUs:
☐	Alarm Points	

Plumbing Requirements

		Size	Flow	Connection Type
☐	Cold Water			
☐	Hot Water			
☐	Pure Water			
☐	Drain			
☐	Vacuum			
☐	Air			
☐	Natural Gas			
☐	Cylinder 1	Gas:		
☐	Cylinder 2	Gas:		
☐	Other			

Electrical Requirements

LOAD
Volts
Phase (1 or 3)
Wire (3, 4 or 5)
KVA
Amps
Watts

SOURCE
☑ Normal Only
☐ Emergency/Standby
☐ Power Quality
☐ Isolated Ground
☐ Dedicated
☐ Conditioned
☐ UPS

CONNECTION
☑ Single Point
☐ Multiple Point
☐ Explosion Proof
☐ Hard Wire
☐ Plug Configuration
☐ Other

Special Requirements

Photo

PROPOSED IN LAB SUITE: 5.1.3

Equipment Data Sheet

Date: #####
Equipment Item: Stackable percival incubators **Quantit** 4
User Name: Ricardo Ramirez
Location (lab/room #): VSB 317
Frequency and type of use daily, continuous -research; insect rearing and experimentation
(i.e. daily, weekly, monthly, yearly - teaching, research)

General Information

Manufacturer: Percival
Model Number: I30BLL
Size (width" x depth" x height"):
Weight (lbs):
Mount Location: ☑ Floor ☑ Wall ☐ Bench ☐ Ceiling
Mount Type: ☐ Fixed ☑ Movable

Mechanical Requirements

		Notes
☐	Exhaust Duct	
☐	Supply Air	
☐	Chilled Water	
☐	Steam	
☐	Other	
☐	Heat Rejection	BTUs:
☐	Alarm Points	

Plumbing Requirements

		Size	Flow	Connection Type
☑	Cold Water			
☐	Hot Water			
☐	Pure Water			
☑	Drain			
☐	Vacuum			
☐	Air			
☐	Natural Gas			
☐	Cylinder 1	Gas:		
☐	Cylinder 2	Gas:		
☐	Other			

Electrical Requirements

LOAD
Volts 115
Phase (1 or 3)
Wire (3, 4 or 5)
KVA
Amps 10
Watts

SOURCE
☐ Normal Only
☐ Emergency/Standby
☐ Power Quality
☐ Isolated Ground
☐ Dedicated
☐ Conditioned
☐ UPS

CONNECTION
☐ Single Point
☐ Multiple Point
☐ Explosion Proof
☐ Hard Wire
☐ Plug Configuration
☐ Other

Special Requirements

Photo

PROPOSED IN LAB SUITE: 5.1.3

Equipment Data Sheet

Date:

Equipment Item: Percival Upright Incubator **Quantit** 1
User Name: Ricardo Ramirez
Location (lab/room #): VSB 317
Frequency and type of use daily, continuous- research; rearing insects and plants
(i.e. daily, weekly, monthly, yearly - teaching, research)

General Information

Manufacturer: Percival
Model Number: I36LLVL
Size (width" x depth" x height"):
Weight (lbs):
Mount Location: ☐ Floor ☐ Wall ☐ Bench ☐ Ceiling
Mount Type: ☐ Fixed ☐ Movable

Mechanical Requirements

	Notes
☐ Exhaust Duct	
☐ Supply Air	
☐ Chilled Water	
☐ Steam	
☐ Other	
☐ Heat Rejection	BTUs:
☐ Alarm Points	

Plumbing Requirements

	Size	Flow	Connection Type
☐ Cold Water			
☐ Hot Water			
☐ Pure Water			
☑ Drain			
☐ Vacuum			
☐ Air			
☐ Natural Gas			
☐ Cylinder 1	Gas:		
☐ Cylinder 2	Gas:		
☐ Other			

Electrical Requirements

LOAD
Volts 115
Phase (1 or 3)
Wire (3, 4 or 5)
KVA
Amps 14
Watts

SOURCE
☐ Normal Only
☐ Emergency/Standby
☐ Power Quality
☐ Isolated Ground
☐ Dedicated
☐ Conditioned
☐ UPS

CONNECTION
☐ Single Point
☐ Multiple Point
☐ Explosion Proof
☐ Hard Wire
☐ Plug Configuration
☐ Other

Special Requirements

Photo

PROPOSED IN LAB SUITE: 5.1.3

Equipment Data Sheet

Date:

Equipment Item: Fridge-Freezer combo **Quantit** 4
User Name: Ricardo Ramirez
Location (lab/room #): VSB 317 and 332 (2 in each lab)
Frequency and type of use daily, research longterm storage (freezer), shortterm plant/insect storage (fridge); inse
(i.e. daily, weekly, monthly, yearly - teaching, research)

General Information

Manufacturer: Isotherm Fisher-sci; Kenmore; kelvinator; whirlpool
Model Number: 13-986-106A; 596.69312010; TSK210JN; QW
Size (width" x depth" x height"):
Weight (lbs):
Mount Location: ☑ Floor ☑ Wall ☐ Bench ☐ Ceiling
Mount Type: ☐ Fixed ☑ Movable

Mechanical Requirements

	Notes
☐ Exhaust Duct	
☐ Supply Air	
☐ Chilled Water	
☐ Steam	
☐ Other	
☐ Heat Rejection	BTUs:
☐ Alarm Points	

Plumbing Requirements

	Size	Flow	Connection Type
☐ Cold Water			
☐ Hot Water			
☐ Pure Water			
☐ Drain			
☐ Vacuum			
☐ Air			
☐ Natural Gas			
☐ Cylinder 1	Gas:		
☐ Cylinder 2	Gas:		
☐ Other			

Electrical Requirements

LOAD
Volts 115
Phase (1 or 3)
Wire (3, 4 or 5)
KVA
Amps 5 to 7.10
Watts

SOURCE
☐ Normal Only
☐ Emergency/Standby
☐ Power Quality
☐ Isolated Ground
☐ Dedicated
☐ Conditioned
☐ UPS

CONNECTION
☐ Single Point
☐ Multiple Point
☐ Explosion Proof
☐ Hard Wire
☐ Plug Configuration
☐ Other

Special Requirements

Photo

PROPOSED IN LAB SUITE: 5.1.3

Equipment Data Sheet

Date:

Equipment Item: Upright Freezer **Quantit** 2
User Name: Ricardo Ramirez
Location (lab/room #): VSB 317 and 332
Frequency and type of use daily, continuous; research Longterm storage of insect, plant, and soil samples
(i.e. daily, weekly, monthly, yearly - teaching, research)

General Information

Manufacturer: Kenmore
Model Number: 253.28052806; 253.22042410
Size (width" x depth" x height"):
Weight (lbs):
Mount Location: ☑ Floor ☑ Wall ☐ Bench ☐ Ceiling
Mount Type: ☐ Fixed ☑ Movable

Mechanical Requirements

	Notes
☐ Exhaust Duct	
☐ Supply Air	
☐ Chilled Water	
☐ Steam	
☐ Other	
☐ Heat Rejection	BTUs:
☐ Alarm Points	

Plumbing Requirements

	Size	Flow	Connection Type
☐ Cold Water			
☐ Hot Water			
☐ Pure Water			
☐ Drain			
☐ Vacuum			
☐ Air			
☐ Natural Gas			
☐ Cylinder 1	Gas:		
☐ Cylinder 2	Gas:		
☐ Other			

Electrical Requirements

LOAD
Volts 115
Phase (1 or 3)
Wire (3, 4 or 5)
KVA
Amps 5
Watts

SOURCE
☐ Normal Only
☐ Emergency/Standby
☐ Power Quality
☐ Isolated Ground
☐ Dedicated
☐ Conditioned
☐ UPS

CONNECTION
☐ Single Point
☐ Multiple Point
☐ Explosion Proof
☐ Hard Wire
☐ Plug Configuration
☐ Other

Special Requirements

Photo

PROPOSED IN LAB SUITE: 5.1.3

Equipment Data Sheet

Date:

Equipment Item: Deep Freezer **Quantit** 1
User Name: Ricardo Ramirez
Location (lab/room #): VSB 332
Frequency and type of use daily, continuous; research longterm storage of insect, plant, and soil samples
(i.e. daily, weekly, monthly, yearly - teaching, research)

General Information

Manufacturer: Frigidaire (Gallery)
Model Number: FGCH20M7LW2
Size (width" x depth" x height"):
Weight (lbs):
Mount Location: ☑ Floor ☑ Wall ☐ Bench ☐ Ceiling
Mount Type: ☐ Fixed ☑ Movable

Mechanical Requirements

	Notes
☐ Exhaust Duct	
☐ Supply Air	
☐ Chilled Water	
☐ Steam	
☐ Other	
☐ Heat Rejection	BTUs:
☐ Alarm Points	

Plumbing Requirements

	Size	Flow	Connection Type
☐ Cold Water			
☐ Hot Water			
☐ Pure Water			
☐ Drain			
☐ Vacuum			
☐ Air			
☐ Natural Gas			
☐ Cylinder 1	Gas:		
☐ Cylinder 2	Gas:		
☐ Other			

Electrical Requirements

LOAD
Volts 115
Phase (1 or 3)
Wire (3, 4 or 5)
KVA
Amps 5
Watts

SOURCE
☐ Normal Only
☐ Emergency/Standby
☐ Power Quality
☐ Isolated Ground
☐ Dedicated
☐ Conditioned
☐ UPS

CONNECTION
☐ Single Point
☐ Multiple Point
☐ Explosion Proof
☐ Hard Wire
☐ Plug Configuration
☐ Other

Special Requirements

Photo

PROPOSED IN LAB SUITE: 5.1.3

Equipment Data Sheet

Date:

Equipment Item: Upright Refridgerator **Quantit** 1
User Name: Ricardo Ramirez
Location (lab/room #): VSB 317
Frequency and type of use daily, continuous, research; short-term storage insects, plants, soil, chemicals
(i.e. daily, weekly, monthly, yearly - teaching, research)

General Information

Manufacturer: Kenmore
Model Number: 254
Size (width" x depth" x height"):
Weight (lbs):
Mount Location: ☑ Floor ☑ Wall ☐ Bench ☐ Ceiling
Mount Type: ☐ Fixed ☑ Movable

Mechanical Requirements

	Notes
☐ Exhaust Duct	
☐ Supply Air	
☐ Chilled Water	
☐ Steam	
☐ Other	
☐ Heat Rejection	BTUs:
☐ Alarm Points	

Plumbing Requirements

	Size	Flow	Connection Type
☐ Cold Water			
☐ Hot Water			
☐ Pure Water			
☐ Drain			
☐ Vacuum			
☐ Air			
☐ Natural Gas			
☐ Cylinder 1	Gas:		
☐ Cylinder 2	Gas:		
☐ Other			

Electrical Requirements

LOAD
Volts 115
Phase (1 or 3)
Wire (3, 4 or 5)
KVA
Amps 5
Watts

SOURCE
☐ Normal Only
☐ Emergency/Standby
☐ Power Quality
☐ Isolated Ground
☐ Dedicated
☐ Conditioned
☐ UPS

CONNECTION
☐ Single Point
☐ Multiple Point
☐ Explosion Proof
☐ Hard Wire
☐ Plug Configuration
☐ Other

Special Requirements

Photo

PROPOSED IN LAB SUITE: 5.1.3

Equipment Data Sheet

Date:

Equipment Item: Precision Thermo Sci. Drying Oven **Quantit** 1
User Name: Ricardo Ramirez
Location (lab/room #): VSB 317
Frequency and type of use seasonal, yearly (end of summer to dry plants and soil); research
(i.e. daily, weekly, monthly, yearly - teaching, research)

General Information

Manufacturer: Thermo scientific
Model Number:
Size (width" x depth" x height"): 2ft1in x 2ft x 3.5ft tall
Weight (lbs):
Mount Location: ☑ Floor ☑ Wall ☐ Bench ☐ Ceiling
Mount Type: ☐ Fixed ☑ Movable

Mechanical Requirements

	Notes
☐ Exhaust Duct	
☐ Supply Air	
☐ Chilled Water	
☐ Steam	
☐ Other	
☐ Heat Rejection	BTUs:
☐ Alarm Points	

Plumbing Requirements

	Size	Flow	Connection Type
☐ Cold Water			
☐ Hot Water			
☐ Pure Water			
☐ Drain			
☐ Vacuum			
☐ Air			
☐ Natural Gas			
☐ Cylinder 1	Gas:		
☐ Cylinder 2	Gas:		
☐ Other			

Electrical Requirements

LOAD
Volts
Phase (1 or 3)
Wire (3, 4 or 5)
KVA
Amps
Watts

SOURCE
☐ Normal Only
☐ Emergency/Standby
☐ Power Quality
☐ Isolated Ground
☐ Dedicated
☐ Conditioned
☐ UPS

CONNECTION
☐ Single Point
☐ Multiple Point
☐ Explosion Proof
☐ Hard Wire
☐ Plug Configuration
☐ Other

Special Requirements

Photo

PROPOSED IN LAB SUITE: 5.1.3

Equipment Data Sheet

Date:

Equipment Item: Corning Mega-Pure System; water purifier **Quantit** 1
User Name: Ricardo Ramirez and Joanne Hughs
Location (lab/room #): VSB 317
Frequency and type of use Weekly, research purified water.
(i.e. daily, weekly, monthly, yearly - teaching, research)

General Information

Manufacturer: Corning MP-1
Model Number:
Size (width" x depth" x height"):
Weight (lbs):
Mount Location: ☐ Floor ☑ Wall ☐ Bench ☐ Ceiling
Mount Type: ☑ Fixed ☐ Movable

Mechanical Requirements

	Notes
☐ Exhaust Duct	
☐ Supply Air	
☐ Chilled Water	
☐ Steam	
☐ Other	
☐ Heat Rejection	BTUs:
☐ Alarm Points	

Plumbing Requirements

	Size	Flow	Connection Type
☑ Cold Water			
☐ Hot Water			
☐ Pure Water			
☑ Drain			
☐ Vacuum			
☐ Air			
☐ Natural Gas			
☐ Cylinder 1	Gas:		
☐ Cylinder 2	Gas:		
☐ Other			

Electrical Requirements

LOAD
Volts
Phase (1 or 3)
Wire (3, 4 or 5)
KVA
Amps
Watts

SOURCE
☐ Normal Only
☐ Emergency/Standby
☐ Power Quality
☐ Isolated Ground
☐ Dedicated
☐ Conditioned
☐ UPS

CONNECTION
☐ Single Point
☐ Multiple Point
☐ Explosion Proof
☐ Hard Wire
☐ Plug Configuration
☐ Other

Special Requirements

Photo

PROPOSED IN LAB SUITE: 5.1.3

Equipment Data Sheet

Date:

Equipment Item: metal halide ballasts and lights **Quantit** 6
User Name: Ricardo Ramirez
Location (lab/room #): VSB 332
Frequency and type of use daily, research; plant and insect rearing and experimentation for lab "greenhouse"
(i.e. daily, weekly, monthly, yearly - teaching, research)

General Information

Manufacturer: Sun system yield master II 6in supresse
Model Number:
Size (width" x depth" x height"):
Weight (lbs):
Mount Location: ☐ Floor ☐ Wall ☐ Bench ☑ Ceiling
Mount Type: ☐ Fixed ☑ Movable

Mechanical Requirements

	Notes
☐ Exhaust Duct	
☐ Supply Air	
☐ Chilled Water	
☐ Steam	
☐ Other	
☐ Heat Rejection	BTUs:
☐ Alarm Points	

Plumbing Requirements

	Size	Flow	Connection Type
☐ Cold Water			
☐ Hot Water			
☐ Pure Water			
☐ Drain			
☐ Vacuum			
☐ Air			
☐ Natural Gas			
☐ Cylinder 1	Gas:		
☐ Cylinder 2	Gas:		
☐ Other			

Electrical Requirements

LOAD
Volts
Phase (1 or 3)
Wire (3, 4 or 5)
KVA
Amps
Watts

SOURCE
☐ Normal Only
☐ Emergency/Standby
☐ Power Quality
☐ Isolated Ground
☐ Dedicated
☐ Conditioned
☐ UPS

CONNECTION
☐ Single Point
☐ Multiple Point
☐ Explosion Proof
☐ Hard Wire
☐ Plug Configuration
☐ Other

Special Requirements

Photo

PROPOSED IN LAB SUITE: 5.1.3

Equipment Data Sheet

Date:

Equipment Item: wire rack with attached fluorescent lights **Quantit** 6
User Name: Ricardo Ramirez
Location (lab/room #): VSB 332
Frequency and type of use daily, continuous; research, units hold plants in trays for rearing of plants and insects
(i.e. daily, weekly, monthly, yearly - teaching, research)

General Information

Manufacturer: Sandusky
Model Number: WS482474
Size (width" x depth" x height"): 4 ft x 2 ft x 6ft
Weight (lbs):
Mount Location: ☑ Floor ☐ Wall ☐ Bench ☐ Ceiling
Mount Type: ☐ Fixed ☑ Movable

Mechanical Requirements

	Notes
☐ Exhaust Duct	
☐ Supply Air	
☐ Chilled Water	
☐ Steam	
☐ Other	
☐ Heat Rejection	BTUs:
☐ Alarm Points	

Plumbing Requirements

	Size	Flow	Connection Type
☐ Cold Water			
☐ Hot Water			
☐ Pure Water			
☐ Drain			
☐ Vacuum			
☐ Air			
☐ Natural Gas			
☐ Cylinder 1	Gas:		
☐ Cylinder 2	Gas:		
☐ Other			

Electrical Requirements

LOAD
Volts
Phase (1 or 3)
Wire (3, 4 or 5)
KVA
Amps
Watts

SOURCE
☐ Normal Only
☐ Emergency/Standby
☐ Power Quality
☐ Isolated Ground
☐ Dedicated
☐ Conditioned
☐ UPS

CONNECTION
☐ Single Point
☐ Multiple Point
☐ Explosion Proof
☐ Hard Wire
☐ Plug Configuration
☐ Other

Special Requirements

Photo

PROPOSED IN LAB SUITE: 5.1.2
User Name: Al Savitzky

Description	Model No.	Serial No.	USU Inventory No.	Voltage	Room No.	Notes
BioShake shaking platform		2985		110	330	
VWR vortex mixer	G-560	2-156091		110	330	
Mettler-Toledo pH meter		1225206283		110	330	
Corning stirring hotplate	PC-420	4.10504E+11		110	330	
Corning stir plate	PC-410	3.50404E+11		110	330	
Denver Instruments top-loading balance	P-4002			110	330	
Denver Instruments analytical balance				110	330	
Fisher Sci. heat block	2052FS	1.64906E+12		110	330	
Fisher Sci. heat block		408N0687		110	330	
Thermolyne rotator-shaker			40360	110	330	
Eppendorf mini-centrifuge	5415C		82075	110	330	
Thermo spectrophotometer	Genesys 10 UV		101853	110	330	
Boekel micro-cooler 2	260010		105313	110	330	
Eppendorf Master-cycler Personal			101905	110	330	
Techne Flexigene thermal cycler		97481		110	330	
Branson sonicator	2510			110	330	
Fisher Sci. water bath	Isotemp 102S			110	330	
Fisher Sci. water bath	Isotemp 2100			110	330	
Hermle Labnet mini-centrifuge	Z233M			110	330	
Agilient Tech. HPLC	Inifinity 1260	140923		110	330	
HP-Compaq computer	Elite 8300			110	330	
Buchi rotovap	Rotavapor			110	330	
KNF Lab vacuum pump				110	330	
Amana refrigerator-freezer				110	330	
Apple Macintosh computer				110	330	
Haier Mini-refrigerator	Afficionado			110	330	
Thermo laminar flow workstation		103005		110	330	
Microwave oven				110	330	
Fisher Sci. gel power supply	FB200	1.59506E+12		110	330	
Fisher Sci. gel power supply	FB300	1.59605E+12		110	330	
Leica Z16 APOA macroscope w/ transmitted light base			136317	110	328A	
Dell LCD monitor				110	328A	
Apple McIntosh computer				110	328A	
Leica M205 C dissecting microscope				110	328A	
Triangle Biomedical Sciences fume absorber	Sure-Clean			110	328A	
Leica M60 dissecting microscope				110	328A	
Fukuda Denshi Cardimax ECG recorder	FX-2111		74546	110	328A	
Fukuda Denshi Cardimax ECG recorder	FX-2112		74545	110	328A	
Fukuda Denshi Cardimax ECG recorder			74544	110	328A	
HP LaserJet printer	P2055DN			110	328A	
Dell Optiplex computer w/ 2 monitors	990			110	328A	
Capsule Tomy mini-centrifuge	HP-120			110	328A	
Capsule Tomy mini-centrifuge	HP-121			110	328A	
IKA T-10 tissue grinder	Ultra-Turrax			110	328A	
Leica ASP-300 tissue processor			140925	110	328A	floor-standing
TMC air table w/ Faraday cage				none	328B	
Tenma oscilloscope	72-6810			110	328B	
Sable Instruments FoxBox oxygen/CO2 analyzer				110	328B	
Rigol digital oscilloscope	DS1052E			110	328B	
Solomon soldering iron	SL-30			110	328B	
Dell Optplex computer				110	828B	
Leica rotary microtome	RM2255			110	328C	
Leica embedding center - heating	EG1150 H			110	328C	
Leica embedding center - cooling	EG1150 C			110	328C	
Precision bench-top incubator		604101628		110	328C	
Fisher slide warmer	77	122		110	328C	
Fisher flotation bath	135	3166		110	328C	
Meiji student compound microscope		46453		110	328C	
Meiji student compound microscope		56060		110	328C	
Triangle Biomedical Sciences downdraft fume absorber				110	328C	
Amana refrigerator-freezer				110	328C	
Dell Optiplex computer	7010			110	328D	
Leica DM4000 B LED compound microscope				110	328D	
Leica DFC290 HD digital microscope camera				110	328D	
UVP UV transilluminator		96939		110	328D	
Leica DM750 compound microscope				110	328D	
Thermo Scientific ultrafreezer (-86C)	TSU600A	1.30357E+14		115	324	

PROPOSED IN LAB SUITE: 5.1.4

Equipment Data Sheet

Date:

Equipment Item: Isotope ratio mass spectrometer **Quantit** 1
User Name: J Stark
Location (lab/room #): VSB 336
Frequency and type of use daily
(i.e. daily, weekly, monthly, yearly - teaching, research)

General Information

Manufacturer: PDZ/Sercon
Model Number: SL-2020
Size (width" x depth" x height"): 8ft long x 3 ft wide x 3 ft tall
Weight (lbs):
Mount Location: ☐ Floor ☐ Wall ☑ Bench ☐ Ceiling
Mount Type: ☐ Fixed ☐ Movable

Mechanical Requirements

	Notes
☑ Exhaust Duct	
☐ Supply Air	
☐ Chilled Water	
☐ Steam	
☐ Other	
☐ Heat Rejection	BTUs:
☐ Alarm Points	

Plumbing Requirements

	Size	Flow	Connection Type
☐ Cold Water			
☐ Hot Water			
☐ Pure Water			
☐ Drain			
☐ Vacuum			
☐ Air			
☐ Natural Gas			
☑ Cylinder 1	Gas:	helium	
☑ Cylinder 2	Gas:	oxygen	
☐ Other	Gas:	air	

Electrical Requirements

LOAD
Volt: 120 and 240
Phase (1 or 3)
Wire (3, 4 or 5)
KVA
Amps
Watts

SOURCE
☐ Normal Only
☑ Emergency/Standby
☑ Power Quality
☐ Isolated Ground
☐ Dedicated
☑ Conditioned
☐ UPS

CONNECTION
☐ Single Point
☑ Multiple Point
☐ Explosion Proof
☐ Hard Wire
☐ Plug Configuration
☐ Other

Special Requirements

Photo

PROPOSED IN LAB SUITE: 5.1.4

Equipment Data Sheet

Date:

Equipment Item: Lachat flow-injection autoanalyzer **Quantit** 1
User Name: J Stark
Location (lab/room #): VSB 336
Frequency and type of use weekly
(i.e. daily, weekly, monthly, yearly - teaching, research)

General Information

Manufacturer: Lachat Instruments
Model Number:
Size (width" x depth" x height"): 5ft long x 2ft wide x 2ft tall
Weight (lbs):
Mount Location: ☐ Floor ☐ Wall ☑ Bench ☐ Ceiling
Mount Type: ☐ Fixed ☐ Movable

Mechanical Requirements

	Notes
☐ Exhaust Duct	
☐ Supply Air	
☐ Chilled Water	
☐ Steam	
☐ Other	
☐ Heat Rejection	BTUs:
☐ Alarm Points	

Plumbing Requirements

	Size	Flow	Connection Type
☐ Cold Water			
☐ Hot Water			
☐ Pure Water			
☑ Drain			
☐ Vacuum			
☐ Air			
☐ Natural Gas			
☐ Cylinder 1	Gas:		
☐ Cylinder 2	Gas:		
☐ Other			

Electrical Requirements

LOAD
Volt: 120
Phase (1 or 3)
Wire (3, 4 or 5)
KVA
Amps
Watts

SOURCE
☑ Normal Only
☐ Emergency/Standby
☐ Power Quality
☐ Isolated Ground
☐ Dedicated
☐ Conditioned
☐ UPS

CONNECTION
☐ Single Point
☑ Multiple Point
☐ Explosion Proof
☐ Hard Wire
☐ Plug Configuration
☐ Other

Special Requirements

Photo

PROPOSED IN LAB SUITE: 5.1.4

Equipment Data Sheet

Date:

Equipment Item: Varian gas chromatograph **Quantit** 2
User Name: J Stark
Location (lab/room #): VSB 339
Frequency and type of use monthly
(i.e. daily, weekly, monthly, yearly - teaching, research)

General Information

Manufacturer: Varian
Model Number: 3300
Size (width" x depth" x height"): 2ft x 2ft x 2ft
Weight (lbs):
Mount Location: ☐ Floor ☐ Wall ☑ Bench ☐ Ceiling
Mount Type: ☐ Fixed ☐ Movable

Mechanical Requirements

	Notes
☐ Exhaust Duct	
☐ Supply Air	
☐ Chilled Water	
☐ Steam	
☐ Other	
☐ Heat Rejection	BTUs:
☐ Alarm Points	

Plumbing Requirements

	Size	Flow	Connection Type
☐ Cold Water			
☐ Hot Water			
☐ Pure Water			
☐ Drain			
☐ Vacuum			
☐ Air			
☐ Natural Gas			
☑ Cylinder 1	Gas:	argon-methane	
☑ Cylinder 2	Gas:	air	
☐ Other			

Electrical Requirements

LOAD
Volt: 240
Phase (1 or 3)
Wire (3, 4 or 5)
KVA
Amps
Watts

SOURCE
☑ Normal Only
☐ Emergency/Standby
☐ Power Quality
☐ Isolated Ground
☐ Dedicated
☐ Conditioned
☐ UPS

CONNECTION
☐ Single Point
☑ Multiple Point
☐ Explosion Proof
☐ Hard Wire
☐ Plug Configuration
☐ Other

Special Requirements

Photo

PROPOSED IN LAB SUITE: 5.1.4

Equipment Data Sheet

Date:

Equipment Item: Cavity ring-down spectrophotometer **Quantit** 1
User Name: J Stark
Location (lab/room #): VSB 336
Frequency and type of use monthly
(i.e. daily, weekly, monthly, yearly - teaching, research)

General Information

Manufacturer: Picarro
Model Number: G2131-I
Size (width" x depth" x height"): 4 ft long x 2 ft wide x 2 ft tall
Weight (lbs):
Mount Location: ☐ Floor ☐ Wall ☑ Bench ☐ Ceiling
Mount Type: ☐ Fixed ☐ Movable

Mechanical Requirements

	Notes
☐ Exhaust Duct	
☐ Supply Air	
☐ Chilled Water	
☐ Steam	
☐ Other	
☐ Heat Rejection	BTUs:
☐ Alarm Points	

Plumbing Requirements

	Size	Flow	Connection Type
☐ Cold Water			
☐ Hot Water			
☐ Pure Water			
☐ Drain			
☐ Vacuum			
☐ Air			
☐ Natural Gas			
☐ Cylinder 1	Gas:		
☐ Cylinder 2	Gas:		
☐ Other			

Electrical Requirements

LOAD
Volt: 120
Phase (1 or 3)
Wire (3, 4 or 5)
KVA
Amps
Watts

SOURCE
☑ Normal Only
☐ Emergency/Standby
☐ Power Quality
☐ Isolated Ground
☐ Dedicated
☐ Conditioned
☐ UPS

CONNECTION
☐ Single Point
☑ Multiple Point
☐ Explosion Proof
☐ Hard Wire
☐ Plug Configuration
☐ Other

Special Requirements

Photo

PROPOSED IN LAB SUITE: 5.1.4

Equipment Data Sheet

Date:

Equipment Item: multiple refrigerators and freezers **Quantit** 5
User Name:
Location (lab/room #):
Frequency and type of use
(i.e. daily, weekly, monthly, yearly - teaching, research)

General Information

Manufacturer
Model Number
Size (width" x depth" x height")
Weight (lbs)
Mount Location ☑ Floor ☐ Wall ☐ Bench ☐ Ceiling
Mount Type ☐ Fixed ☐ Movable

Mechanical Requirements

	Notes
☐ Exhaust Duct	
☐ Supply Air	
☐ Chilled Water	
☐ Steam	
☐ Other	
☐ Heat Rejection	BTUs:
☐ Alarm Points	

Plumbing Requirements

	Size	Flow	Connection Type
☐ Cold Water			
☐ Hot Water			
☐ Pure Water			
☐ Drain			
☐ Vacuum			
☐ Air			
☐ Natural Gas			
☐ Cylinder 1	Gas:		
☐ Cylinder 2	Gas:		
☐ Other			

Electrical Requirements

LOAD
Volt: 120
Phase (1 or 3)
Wire (3, 4 or 5)
KVA
Amps
Watts

SOURCE
☑ Normal Only
☐ Emergency/Standby
☐ Power Quality
☐ Isolated Ground
☐ Dedicated
☐ Conditioned
☐ UPS

CONNECTION
☐ Single Point
☑ Multiple Point
☐ Explosion Proof
☐ Hard Wire
☐ Plug Configuration
☐ Other

Special Requirements

Photo

PROPOSED IN LAB SUITE: 5.1.4

Equipment Data Sheet

Date:

Equipment Item: drying oven **Quantit** 2
User Name: J Stark
Location (lab/room #): VSB 339
Frequency and type of use weekly
(i.e. daily, weekly, monthly, yearly - teaching, research)

General Information

Manufacturer
Model Number
Size (width" x depth" x height") 2ft x 2ft x 2ft
Weight (lbs)
Mount Location ☐ Floor ☐ Wall ☑ Bench ☐ Ceiling
Mount Type ☐ Fixed ☐ Movable

Mechanical Requirements

	Notes
☐ Exhaust Duct	
☐ Supply Air	
☐ Chilled Water	
☐ Steam	
☐ Other	
☐ Heat Rejection	BTUs:
☐ Alarm Points	

Plumbing Requirements

	Size	Flow	Connection Type
☐ Cold Water			
☐ Hot Water			
☐ Pure Water			
☐ Drain			
☐ Vacuum			
☐ Air			
☐ Natural Gas			
☐ Cylinder 1	Gas:		
☐ Cylinder 2	Gas:		
☐ Other			

Electrical Requirements

LOAD
Volt: 240
Phase (1 or 3)
Wire (3, 4 or 5)
KVA
Amps
Watts

SOURCE
☑ Normal Only
☐ Emergency/Standby
☐ Power Quality
☐ Isolated Ground
☐ Dedicated
☐ Conditioned
☐ UPS

CONNECTION
☑ Single Point
☐ Multiple Point
☐ Explosion Proof
☐ Hard Wire
☐ Plug Configuration
☐ Other

Special Requirements

Photo

PROPOSED IN LAB SUITE: 5.1.4

Equipment Data Sheet

Date:

Equipment Item: mechanical shakers **Quantit** 3
User Name: J Stark
Location (lab/room #): VSB 339
Frequency and type of use weekly
(i.e. daily, weekly, monthly, yearly - teaching, research)

General Information

Manufacturer
Model Number
Size (width" x depth" x height")
Weight (lbs)
Mount Location ☐ Floor ☐ Wall ☐ Bench ☐ Ceiling
Mount Type ☐ Fixed ☐ Movable

Mechanical Requirements

	Notes
☐ Exhaust Duct	
☐ Supply Air	
☐ Chilled Water	
☐ Steam	
☐ Other	
☐ Heat Rejection	BTUs:
☐ Alarm Points	

Plumbing Requirements

	Size	Flow	Connection Type
☐ Cold Water			
☐ Hot Water			
☐ Pure Water			
☐ Drain			
☐ Vacuum			
☐ Air			
☐ Natural Gas			
☐ Cylinder 1	Gas:		
☐ Cylinder 2	Gas:		
☐ Other			

Electrical Requirements

LOAD
Volt: 120
Phase (1 or 3)
Wire (3, 4 or 5)
KVA
Amps
Watts

SOURCE
☑ Normal Only
☐ Emergency/Standby
☐ Power Quality
☐ Isolated Ground
☐ Dedicated
☐ Conditioned
☐ UPS

CONNECTION
☑ Single Point
☐ Multiple Point
☐ Explosion Proof
☐ Hard Wire
☐ Plug Configuration
☐ Other

Special Requirements

Photo

PROPOSED IN LAB SUITE: 5.1.6

Equipment Data Sheet

Date 1/24/2016

Equipment Item: vacuum drying oven **Quantit** 1
User Name: Takemoto
Location (lab/room #): BNR306
Frequency and type of use daily
(i.e. daily, weekly, monthly, yearly - teaching, research)

General Information

Manufacturer Precision Scientific
Model Number
Size (width" x depth" x height") 12" x 20" x 30"
Weight (lbs) 25
Mount Location ☐ Floor ☐ Wall ☑ Bench ☐ Ceiling
Mount Type ☐ Fixed ☐ Movable

Mechanical Requirements

	Notes
☐ Exhaust Duct	
☐ Supply Air	
☐ Chilled Water	
☐ Steam	
☐ Other	
☐ Heat Rejection	BTUs:
☐ Alarm Points	

Plumbing Requirements

	Size	Flow	Connection Type
☐ Cold Water			
☐ Hot Water			
☐ Pure Water			
☐ Drain			
☑ Vacuum			
☐ Air			
☐ Natural Gas			
☐ Cylinder 1	Gas:		
☐ Cylinder 2	Gas:		
☐ Other			

Electrical Requirements

LOAD
Volt: 125
Phase (1 or 3)
Wire (3, 4 or 5)
KVA
Amps
Watts

SOURCE
☑ Normal Only
☐ Emergency/Standby
☐ Power Quality
☐ Isolated Ground
☐ Dedicated
☐ Conditioned
☐ UPS

CONNECTION
☑ Single Point
☑ Multiple Point
☐ Explosion Proof
☐ Hard Wire
☐ Plug Configuration
☐ Other

Special Requirements

Photo

CRSA PAYETTE

PROPOSED IN LAB SUITE: 5.1.6

Equipment Data Sheet

Date 1/24/2016

Equipment Item: flash evaporator **Quantit** 1
User Name: Takemoto
Location (lab/room #): BNR306
Frequency and type of use daily
(i.e. daily, weekly, monthly, yearly - teaching, research)

General Information

Manufacturer: Buchi
Model Number:
Size (width" x depth" x height"): 30" x 24" x 30"
Weight (lbs): 25
Mount Location: ☐ Floor ☐ Wall ☑ Bench ☐ Ceiling
Mount Type: ☐ Fixed ☐ Movable

Mechanical Requirements

	Notes
☐ Exhaust Duct	
☐ Supply Air	
☐ Chilled Water	
☐ Steam	
☐ Other	
☐ Heat Rejection	BTUs:
☐ Alarm Points	

Plumbing Requirements

	Size	Flow	Connection Type
☑ Cold Water	1/2"		
☐ Hot Water			
☐ Pure Water			
☑ Drain			
☑ Vacuum			
☐ Air			
☐ Natural Gas			
☐ Cylinder 1	Gas:		
☐ Cylinder 2	Gas:		
☐ Other			

Electrical Requirements

LOAD
Volts
Phase (1 or 3)
Wire (3, 4 or 5)
KVA
Amps
Watts

SOURCE
☑ Normal Only
☐ Emergency/Standby
☐ Power Quality
☐ Isolated Ground
☐ Dedicated
☐ Conditioned
☐ UPS

CONNECTION
☐ Single Point
☑ Multiple Point
☐ Explosion Proof
☐ Hard Wire
☐ Plug Configuration
☐ Other

Special Requirements

Photo

PROPOSED IN LAB SUITE: 5.1.6

Equipment Data Sheet

Date 1/24/2016

Equipment Item: flammable solvent cabinet **Quantit** 1
User Name: Takemoto
Location (lab/room #): BNR306
Frequency and type of use daily
(i.e. daily, weekly, monthly, yearly - teaching, research)

General Information

Manufacturer: Eagle
Model Number: 1947
Size (width" x depth" x height"): 44" x 24" x 65"
Weight (lbs): 100
Mount Location: ☐ Floor ☐ Wall ☑ Bench ☐ Ceiling
Mount Type: ☐ Fixed ☐ Movable

Mechanical Requirements

	Notes
☐ Exhaust Duct	
☐ Supply Air	
☐ Chilled Water	
☐ Steam	
☐ Other	
☐ Heat Rejection	BTUs:
☐ Alarm Points	

Plumbing Requirements

	Size	Flow	Connection Type
☐ Cold Water			
☐ Hot Water			
☐ Pure Water			
☐ Drain			
☐ Vacuum			
☐ Air			
☐ Natural Gas			
☐ Cylinder 1	Gas:		
☐ Cylinder 2	Gas:		
☐ Other			

Electrical Requirements

LOAD
Volts
Phase (1 or 3)
Wire (3, 4 or 5)
KVA
Amps
Watts

SOURCE
☑ Normal Only
☐ Emergency/Standby
☐ Power Quality
☐ Isolated Ground
☐ Dedicated
☐ Conditioned
☐ UPS

CONNECTION
☐ Single Point
☑ Multiple Point
☐ Explosion Proof
☐ Hard Wire
☐ Plug Configuration
☐ Other

Special Requirements

Photo

PROPOSED IN LAB SUITE: 5.1.6

Equipment Data Sheet

Date 1/24/2016

Equipment Item: water still **Quantit** 1
User Name: Takemoto
Location (lab/room #): BNR306
Frequency and type of use daily
(i.e. daily, weekly, monthly, yearly - teaching, research)

General Information

Manufacturer: home made
Model Number:
Size (width" x depth" x height") 40" x 16" x 48"
Weight (lbs) 100
Mount Location: ☐ Floor ☐ Wall ☑ Bench ☐ Ceiling
Mount Type: ☐ Fixed ☐ Movable

Mechanical Requirements

	Notes
☐ Exhaust Duct	
☐ Supply Air	
☐ Chilled Water	
☐ Steam	
☐ Other	
☐ Heat Rejection	BTUs:
☐ Alarm Points	

Plumbing Requirements

	Size	Flow	Connection Type
☑ Cold Water	1/4"	variable	
☐ Hot Water			
☑ Pure Water	1/4"		
☑ Drain	1/4"		
☑ Vacuum			
☐ Air			
☐ Natural Gas			
☐ Cylinder 1	Gas:		
☐ Cylinder 2	Gas:		
☐ Other			

Electrical Requirements

LOAD
Volt: 125
Phase (1 or 3)
Wire (3, 4 or 5)
KVA
Amps
Watts

SOURCE
☑ Normal Only
☐ Emergency/Standby
☐ Power Quality
☐ Isolated Ground
☐ Dedicated
☐ Conditioned
☐ UPS

CONNECTION
☐ Single Point
☑ Multiple Point
☐ Explosion Proof
☐ Hard Wire
☐ Plug Configuration
☐ Other

Special Requirements

Photo

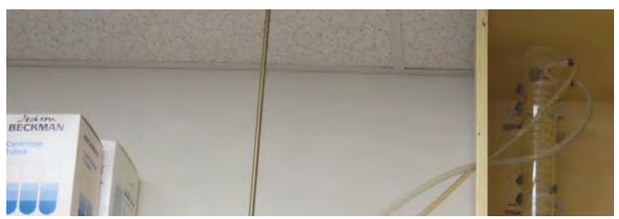

PROPOSED IN LAB SUITE: 5.1.6

Equipment Data Sheet

Date: #####

Equipment Item: minus 80degreeC Freezer **Quantit** 1
User Name: Takemoto
Location (lab/room #): BNR306b
Frequency and type of use daily
(i.e. daily, weekly, monthly, yearly - teaching, research)

General Information

Manufacturer: Revco
Model Number:
Size (width" x depth" x height") 30" x 30" x 72"
Weight (lbs) 200
Mount Location: ☑ Floor ☐ Wall ☐ Bench ☐ Ceiling
Mount Type: ☐ Fixed ☐ Movable

Mechanical Requirements

	Notes
☐ Exhaust Duct	
☐ Supply Air	
☐ Chilled Water	
☐ Steam	
☐ Other	
☐ Heat Rejection	BTUs:
☐ Alarm Points	

Plumbing Requirements

	Size	Flow	Connection Type
☐ Cold Water			
☐ Hot Water			
☐ Pure Water			
☐ Drain			
☐ Vacuum			
☐ Air			
☐ Natural Gas			
☐ Cylinder 1	Gas:		
☐ Cylinder 2	Gas:		
☐ Other			

Electrical Requirements

LOAD
Volt: 125
Phase (1 or 3) 3
Wire (3, 4 or 5) 3
KVA
Amps
Watts

SOURCE
☑ Normal Only
☑ Emergency/Standby
☐ Power Quality
☐ Isolated Ground
☑ Dedicated
☐ Conditioned
☐ UPS

CONNECTION
☑ Single Point
☐ Multiple Point
☐ Explosion Proof
☐ Hard Wire
☐ Plug Configuration
☐ Other

Special Requirements

noise level high; house n separate room, e.g. "freezer bank"

Photo

CRSA PAYETTE

PROPOSED IN LAB SUITE: 5.1.6

Equipment Data Sheet

Date 1/23/2016

Equipment Item: Freezer no defrost **Quantit** 1
User Name: Takemoto
Location (lab/room #): BNR306
Frequency and type of use daily, research
(i.e. daily, weekly, monthly, yearly - teaching, research)

General Information

Manufacturer: Kelvinator
Model Number:
Size (width" x depth" x height"): 32" x 24" x 60"
Weight (lbs): 100
Mount Location: ☑ Floor ☐ Wall ☐ Bench ☐ Ceiling
Mount Type: ☐ Fixed ☑ Movable

Mechanical Requirements

	Notes
☐ Exhaust Duct	
☐ Supply Air	
☐ Chilled Water	
☐ Steam	
☐ Other	
☐ Heat Rejection	BTUs:
☐ Alarm Points	

Plumbing Requirements

	Size	Flow	Connection Type
☐ Cold Water			
☐ Hot Water			
☐ Pure Water			
☐ Drain			
☐ Vacuum			
☐ Air			
☐ Natural Gas			
☐ Cylinder 1	Gas:		
☐ Cylinder 2	Gas:		
☐ Other			

Electrical Requirements

LOAD
Volt: 125
Phase (1 or 3)
Wire (3, 4 or 5)
KVA
Amps
Watts

SOURCE
☑ Normal Only
☑ Emergency/Standby
☐ Power Quality
☐ Isolated Ground
☐ Dedicated
☐ Conditioned
☐ UPS

CONNECTION
☑ Single Point
☐ Multiple Point
☐ Explosion Proof
☐ Hard Wire
☐ Plug Configuration
☐ Other

Special Requirements

Photo

PROPOSED IN LAB SUITE: 5.1.6

Equipment Data Sheet

Date 1/23/2016

Equipment Item: refrigerators **Quantit** 3
User Name: Takemoto
Location (lab/room #): BNR 306, BNR 306a
Frequency and type of use daily
(i.e. daily, weekly, monthly, yearly - teaching, research)

General Information

Manufacturer: Frigidaire, Kelvinator, Gibson
Model Number:
Size (width" x depth" x height"): 30" x 30' x 60"
Weight (lbs): 100
Mount Location: ☑ Floor ☐ Wall ☐ Bench ☐ Ceiling
Mount Type: ☐ Fixed ☐ Movable

Mechanical Requirements

	Notes
☐ Exhaust Duct	
☐ Supply Air	
☐ Chilled Water	
☐ Steam	
☐ Other	
☐ Heat Rejection	BTUs:
☐ Alarm Points	

Plumbing Requirements

	Size	Flow	Connection Type
☐ Cold Water			
☐ Hot Water			
☐ Pure Water			
☐ Drain			
☐ Vacuum			
☐ Air			
☐ Natural Gas			
☐ Cylinder 1	Gas:		
☐ Cylinder 2	Gas:		
☐ Other			

Electrical Requirements

LOAD
Volt: 125
Phase (1 or 3) 1
Wire (3, 4 or 5)
KVA
Amps
Watts

SOURCE
☑ Normal Only
☐ Emergency/Standby
☐ Power Quality
☐ Isolated Ground
☐ Dedicated
☐ Conditioned
☐ UPS

CONNECTION
☑ Single Point
☐ Multiple Point
☐ Explosion Proof
☐ Hard Wire
☐ Plug Configuration
☐ Other

Special Requirements

Photo

PROPOSED IN LAB SUITE: 5.1.6

Equipment Data Sheet

Date 1/23/2016

Equipment Item: Freeze dryer **Quantit** 1
User Name: Takemoto
Location (lab/room #): BNR302
Frequency and type of use weekly
(i.e. daily, weekly, monthly, yearly - teaching, research)

General Information

Manufacturer: FTS
Model Number: Flexi-dry
Size (width" x depth" x height"): 18"x 18"x 18"
Weight (lbs): 40
Mount Location: ☐ Floor ☐ Wall ☑ Bench ☐ Ceiling
Mount Type: ☐ Fixed ☐ Movable

Mechanical Requirements

	Notes
☑ Exhaust Duct	fumes from vacuum pump
☐ Supply Air	
☐ Chilled Water	
☐ Steam	
☐ Other	
☐ Heat Rejection	BTUs:
☐ Alarm Points	

Plumbing Requirements

	Size	Flow	Connection Type
☐ Cold Water			
☐ Hot Water			
☐ Pure Water			
☐ Drain			
☐ Vacuum			
☐ Air			
☐ Natural Gas			
☐ Cylinder 1	Gas:		
☐ Cylinder 2	Gas:		
☐ Other			

Electrical Requirements

LOAD
Volt: 125
Phase (1 or 3)
Wire (3, 4 or 5)
KVA
Amps
Watts

SOURCE
☑ Normal Only
☑ Emergency/Standby
☐ Power Quality
☐ Isolated Ground
☐ Dedicated
☐ Conditioned
☐ UPS

CONNECTION
☐ Single Point
☑ Multiple Point
☐ Explosion Proof
☐ Hard Wire
☐ Plug Configuration
☐ Other

Special Requirements

noisy. Locate in room separate from main laboratory

Photo

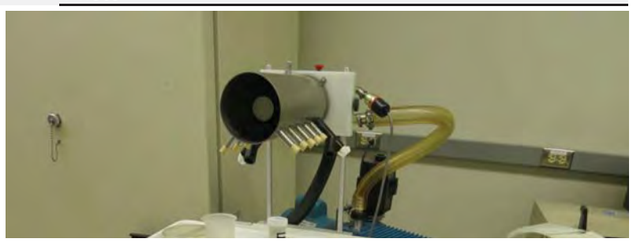

PROPOSED IN LAB SUITE: 5.1.6

Equipment Data Sheet

Date 1/23/2016

Equipment Item: Ultracentrifuge **Quantit** 1
User Name: Takemoto
Location (lab/room #): BNR302
Frequency and type of use monthly
(i.e. daily, weekly, monthly, yearly - teaching, research)

General Information

Manufacturer: Beckman
Model Number: L8
Size (width" x depth" x height"): 30" x 30" X 36"
Weight (lbs): 250
Mount Location: ☑ Floor ☐ Wall ☐ Bench ☐ Ceiling
Mount Type: ☐ Fixed ☑ Movable

Mechanical Requirements

	Notes
☐ Exhaust Duct	
☐ Supply Air	
☐ Chilled Water	
☐ Steam	
☐ Other	
☐ Heat Rejection	BTUs:
☐ Alarm Points	

Plumbing Requirements

	Size	Flow	Connection Type
☑ Cold Water			
☐ Hot Water			
☐ Pure Water			
☐ Drain			
☐ Vacuum			
☐ Air			
☐ Natural Gas			
☐ Cylinder 1	Gas:		
☐ Cylinder 2	Gas:		
☐ Other			

Electrical Requirements

LOAD
Volt: 250
Phase (1 or 3)
Wire (3, 4 or 5)
KVA
Amps
Watts

SOURCE
☑ Normal Only
☐ Emergency/Standby
☐ Power Quality
☐ Isolated Ground
☑ Dedicated
☐ Conditioned
☐ UPS

CONNECTION
☑ Single Point
☐ Multiple Point
☐ Explosion Proof
☐ Hard Wire
☑ Plug Configuratio special
☐ Other

Special Requirements

Photo

CRSA PAYETTE

PROPOSED IN LAB SUITE: 5.1.6

Equipment Data Sheet

Date 1/23/2016

Equipment Item: laminar air flow clean bench **Quantit** 1
User Name: Takemoto
Location (lab/room #): BNR 306A
Frequency and type of use daily
(i.e. daily, weekly, monthly, yearly - teaching, research)

General Information

Manufacturer: Nu-Aire
Model Number: NU201-330
Size (width" x depth" x height"): 36" x 30" x 72"
Weight (lbs): 250
Mount Location: ☑ Floor ☐ Wall ☐ Bench ☐ Ceiling
Mount Type: ☐ Fixed ☑ Movable

Mechanical Requirements

	Notes
☐ Exhaust Duct	
☐ Supply Air	
☐ Chilled Water	
☐ Steam	
☐ Other	
☐ Heat Rejection	BTUs:
☐ Alarm Points	

Plumbing Requirements

	Size	Flow	Connection Type
☐ Cold Water			
☐ Hot Water			
☐ Pure Water			
☐ Drain			
☐ Vacuum			
☐ Air			
☑ Natural Gas			
☐ Cylinder 1	Gas:		
☐ Cylinder 2	Gas:		
☐ Other			

Electrical Requirements

LOAD
Volt: 125
Phase (1 or 3) 1
Wire (3, 4 or 5)
KVA
Amps 15
Watts

SOURCE
☐ Normal Only
☐ Emergency/Standby
☐ Power Quality
☐ Isolated Ground
☐ Dedicated
☐ Conditioned
☐ UPS

CONNECTION
☑ Single Point
☐ Multiple Point
☐ Explosion Proof
☐ Hard Wire
☐ Plug Configuration
☐ Other

Special Requirements

Photo

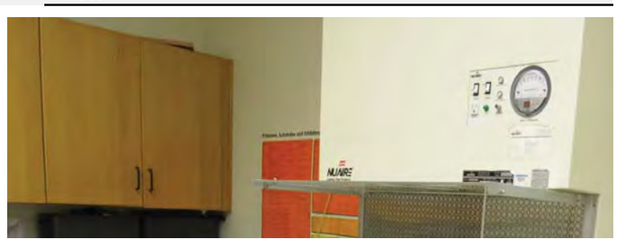

PROPOSED IN LAB SUITE: 5.1.6

Equipment Data Sheet

Date 1/23/2016

Equipment Item: laminar flow clean bench **Quantit** 1
User Name: Takemoto
Location (lab/room #): BNR306
Frequency and type of use daily, research
(i.e. daily, weekly, monthly, yearly - teaching, research)

General Information

Manufacturer: INTEGRATED AIR SYSTEMS
Model Number: ??
Size (width" x depth" x height"): 72"x 36" x 60"
Weight (lbs): 300
Mount Location: ☑ Floor ☐ Wall ☐ Bench ☐ Ceiling
Mount Type: ☐ Fixed ☑ Movable

Mechanical Requirements

	Notes
☐ Exhaust Duct	
☐ Supply Air	
☐ Chilled Water	
☐ Steam	
☐ Other	
☐ Heat Rejection	BTUs:
☐ Alarm Points	

Plumbing Requirements

	Size	Flow	Connection Type
☐ Cold Water			
☐ Hot Water			
☐ Pure Water			
☐ Drain			
☐ Vacuum			
☐ Air			
☑ Natural Gas			
☐ Cylinder 1	Gas:		
☐ Cylinder 2	Gas:		
☐ Other			

Electrical Requirements

LOAD
Volt: 125
Phase (1 or 3)
Wire (3, 4 or 5)
KVA
Amps
Watts

SOURCE
☑ Normal Only
☐ Emergency/Standby
☐ Power Quality
☐ Isolated Ground
☐ Dedicated
☐ Conditioned
☐ UPS

CONNECTION
☑ Single Point
☐ Multiple Point
☐ Explosion Proof
☐ Hard Wire
☐ Plug Configuration
☐ Other

Special Requirements

Photo

PROPOSED IN LAB SUITE: 5.1.6

Equipment Data Sheet

Date: #####

Equipment Item: Microplate reader spectrophotometer + computer **Quantit** 1
User Name: Takemoto
Location (lab/room #): BNR306
Frequency and type of use daily
(i.e. daily, weekly, monthly, yearly - teaching, research)

General Information

Manufacturer: Biotek
Model Number: Synergy HT
Size (width" x depth" x height") 36 x12 x 12
Weight (lbs) 30
Mount Location: ☐ Floor ☑ Wall ☑ Bench ☐ Ceiling
Mount Type: ☐ Fixed ☑ Movable

Mechanical Requirements

	Notes
☐ Exhaust Duct	
☐ Supply Air	
☐ Chilled Water	
☐ Steam	
☐ Other	
☐ Heat Rejection	BTUs:
☐ Alarm Points	

Plumbing Requirements

	Size	Flow	Connection Type
☐ Cold Water			
☐ Hot Water			
☐ Pure Water			
☐ Drain			
☐ Vacuum			
☐ Air			
☐ Natural Gas			
☐ Cylinder 1	Gas:		
☐ Cylinder 2	Gas:		
☐ Other			

Electrical Requirements

LOAD
Volt: 125
Phase (1 or 3)
Wire (3, 4 or 5)
KVA
Amps
Watts

SOURCE
☑ Normal Only
☐ Emergency/Standby
☐ Power Quality
☐ Isolated Ground
☐ Dedicated
☐ Conditioned
☐ UPS

CONNECTION
☐ Single Point
☑ Multiple Point
☐ Explosion Proof
☐ Hard Wire
☐ Plug Configuration
☐ Other

Special Requirements

internet connection

Photo

PROPOSED IN LAB SUITE: 5.1.6

Equipment Data Sheet

Date 1/23/2016

Equipment Item: ultracentrifuge **Quantit** 1
User Name: Takemoto
Location (lab/room #): BNR304B
Frequency and type of use monthly
(i.e. daily, weekly, monthly, yearly - teaching, research)

General Information

Manufacturer: Beckman
Model Number: TL100
Size (width" x depth" x height") 30x24x24
Weight (lbs) 100
Mount Location: ☐ Floor ☑ Wall ☑ Bench ☐ Ceiling
Mount Type: ☐ Fixed ☑ Movable

Mechanical Requirements

	Notes
☐ Exhaust Duct	
☐ Supply Air	
☐ Chilled Water	
☐ Steam	
☐ Other	
☐ Heat Rejection	BTUs:
☐ Alarm Points	

Plumbing Requirements

	Size	Flow	Connection Type
☐ Cold Water			
☐ Hot Water			
☐ Pure Water			
☐ Drain			
☐ Vacuum			
☐ Air			
☐ Natural Gas			
☐ Cylinder 1	Gas:		
☐ Cylinder 2	Gas:		
☐ Other			

Electrical Requirements

LOAD
Volt: 125
Phase (1 or 3)
Wire (3, 4 or 5)
KVA
Amps
Watts

SOURCE
☑ Normal Only
☐ Emergency/Standby
☐ Power Quality
☐ Isolated Ground
☐ Dedicated
☐ Conditioned
☐ UPS

CONNECTION
☑ Single Point
☐ Multiple Point
☐ Explosion Proof
☐ Hard Wire
☐ Plug Configuration
☐ Other

Special Requirements

Photo

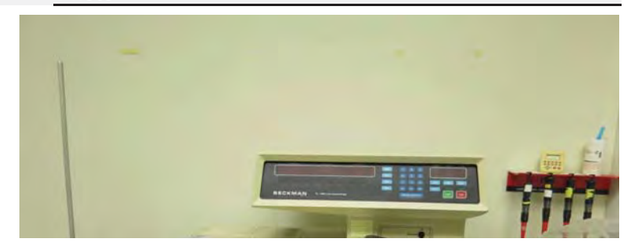

PROPOSED IN LAB SUITE: 5.1.6

Equipment Data Sheet

Date: #####

Equipment Item: High-speed centrifuge **Quantit** 1
User Name: Takemoto
Location (lab/room #): BNR306
Frequency and type of use weekly research
(i.e. daily, weekly, monthly, yearly - teaching, research)

General Information

Manufacturer: Beckman
Model Number: J-21
Size (width" x depth" x height"): 30" x 30" x 40"
Weight (lbs): 250
Mount Location: ☑ Floor ☐ Wall ☐ Bench ☐ Ceiling
Mount Type: ☐ Fixed ☐ Movable

Mechanical Requirements

	Notes
☐ Exhaust Duct	
☐ Supply Air	
☐ Chilled Water	
☐ Steam	
☐ Other	
☐ Heat Rejection	BTUs:
☐ Alarm Points	

Plumbing Requirements

	Size	Flow	Connection Type
☐ Cold Water			
☐ Hot Water			
☐ Pure Water			
☐ Drain			
☐ Vacuum			
☐ Air			
☐ Natural Gas			
☐ Cylinder 1	Gas:		
☐ Cylinder 2	Gas:		
☐ Other			

Electrical Requirements

LOAD
Volt: 250
Phase (1 or 3)
Wire (3, 4 or 5)
KVA
Amps
Watts

SOURCE
☐ Normal Only
☐ Emergency/Standby
☐ Power Quality
☑ Isolated Ground
☐ Dedicated
☐ Conditioned
☐ UPS

CONNECTION
☑ Single Point
☐ Multiple Point
☐ Explosion Proof
☐ Hard Wire
☐ Plug Configuration
☐ Other

Special Requirements

Photo

PROPOSED IN LAB SUITE: 5.1.6

Equipment Data Sheet

Date: #####

Equipment Item: centrifuge **Quantit** 1
User Name: Takemoto
Location (lab/room #): 306
Frequency and type of use weekly
(i.e. daily, weekly, monthly, yearly - teaching, research)

General Information

Manufacturer: ThermoFisher Centra
Model Number: CENTRA CL5R
Size (width" x depth" x height"): 30' x 30 " x 16'
Weight (lbs):
Mount Location: ☐ Floor ☐ Wall ☑ Bench ☐ Ceiling
Mount Type: ☐ Fixed ☐ Movable

Mechanical Requirements

	Notes
☐ Exhaust Duct	
☐ Supply Air	
☐ Chilled Water	
☐ Steam	
☐ Other	
☐ Heat Rejection	BTUs:
☐ Alarm Points	

Plumbing Requirements

	Size	Flow	Connection Type
☐ Cold Water			
☐ Hot Water			
☐ Pure Water			
☐ Drain			
☐ Vacuum			
☐ Air			
☐ Natural Gas			
☐ Cylinder 1	Gas:		
☐ Cylinder 2	Gas:		
☐ Other			

Electrical Requirements

LOAD
Volt: 125
Phase (1 or 3)
Wire (3, 4 or 5)
KVA
Amps
Watts

SOURCE
☑ Normal Only
☐ Emergency/Standby
☐ Power Quality
☐ Isolated Ground
☐ Dedicated
☐ Conditioned
☐ UPS

CONNECTION
☑ Single Point
☐ Multiple Point
☐ Explosion Proof
☐ Hard Wire
☐ Plug Configuration
☐ Other

Special Requirements

Photo

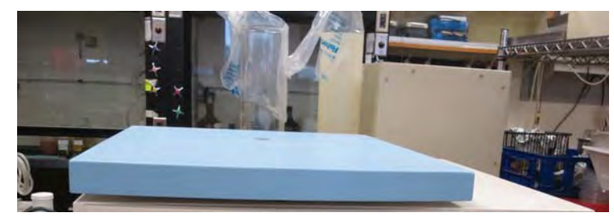

PROPOSED IN LAB SUITE: 5.1.6

Equipment Data Sheet

Date ########

Equipment Item: microwave oven **Quantit** 1
User Name: Takemoto
Location (lab/room #): BNR306
Frequency and type of use dailLy
(i.e. daily, weekly, monthly, yearly - teaching, research)

General Information

Manufacturer: Sharp
Model Number:
Size (width" x depth" x height"): 20" x 15" x 12"
Weight (lbs):
Mount Location: ☐ Floor ☐ Wall ☑ Bench ☐ Ceiling
Mount Type: ☐ Fixed ☐ Movable

Mechanical Requirements

	Notes
☐ Exhaust Duct	
☐ Supply Air	
☐ Chilled Water	
☐ Steam	
☐ Other	
☐ Heat Rejection	BTUs:
☐ Alarm Points	

Plumbing Requirements

	Size	Flow	Connection Type
☐ Cold Water			
☐ Hot Water			
☐ Pure Water			
☐ Drain			
☐ Vacuum			
☐ Air			
☐ Natural Gas			
☐ Cylinder 1	Gas:		
☐ Cylinder 2	Gas:		
☐ Other			

Electrical Requirements

LOAD
Volt: 125
Phase (1 or 3)
Wire (3, 4 or 5)
KVA
Amps
Watts

SOURCE
☑ Normal Only
☐ Emergency/Standby
☐ Power Quality
☐ Isolated Ground
☐ Dedicated
☐ Conditioned
☐ UPS

CONNECTION
☑ Single Point
☐ Multiple Point
☐ Explosion Proof
☐ Hard Wire
☐ Plug Configuration
☐ Other

Special Requirements

Photo

PROPOSED IN LAB SUITE: 5.1.6

Equipment Data Sheet

Date:

Equipment Item: Power supply **Quantit** 1
User Name: Takemoto
Location (lab/room #): BNR306
Frequency and type of use monthly
(i.e. daily, weekly, monthly, yearly - teaching, research)

General Information

Manufacturer: ISCO
Model Number: 470
Size (width" x depth" x height"): 12" x 15" x 8 "
Weight (lbs): 20
Mount Location: ☐ Floor ☐ Wall ☑ Bench ☐ Ceiling
Mount Type: ☐ Fixed ☐ Movable

Mechanical Requirements

	Notes
☐ Exhaust Duct	
☐ Supply Air	
☐ Chilled Water	
☐ Steam	
☐ Other	
☐ Heat Rejection	BTUs:
☐ Alarm Points	

Plumbing Requirements

	Size	Flow	Connection Type
☐ Cold Water			
☐ Hot Water			
☐ Pure Water			
☐ Drain			
☐ Vacuum			
☐ Air			
☐ Natural Gas			
☐ Cylinder 1	Gas:		
☐ Cylinder 2	Gas:		
☐ Other			

Electrical Requirements

LOAD
Volt: 125
Phase (1 or 3)
Wire (3, 4 or 5)
KVA
Amps
Watts

SOURCE
☑ Normal Only
☐ Emergency/Standby
☐ Power Quality
☐ Isolated Ground
☐ Dedicated
☐ Conditioned
☐ UPS

CONNECTION
☑ Single Point
☐ Multiple Point
☐ Explosion Proof
☐ Hard Wire
☐ Plug Configuration
☐ Other

Special Requirements

Photo

CRSA PAYETTE

PROPOSED IN LAB SUITE: 5.1.6

Equipment Data Sheet

Date 1/23/2016

Equipment Item: probe sonicator **Quantit** 1
User Name: Takemoto
Location (lab/room #): BNR306
Frequency and type of use monthly , research
(i.e. daily, weekly, monthly, yearly - teaching, research)

General Information

Manufacturer
Model Number
Size (width" x depth" x height") 16" x 14" x 30"
Weight (lbs) 10
Mount Location ☐ Floor ☐ Wall ☑ Bench ☐ Ceiling
Mount Type ☐ Fixed ☐ Movable

Mechanical Requirements

	Notes
☐ Exhaust Duct	
☐ Supply Air	
☐ Chilled Water	
☐ Steam	
☐ Other	
☐ Heat Rejection	BTUs:
☐ Alarm Points	

Plumbing Requirements

	Size	Flow	Connection Type
☐ Cold Water			
☐ Hot Water			
☐ Pure Water			
☐ Drain			
☐ Vacuum			
☐ Air			
☐ Natural Gas			
☐ Cylinder 1	Gas:		
☐ Cylinder 2	Gas:		
☐ Other			

Electrical Requirements

LOAD
Volt: 125
Phase (1 or 3)
Wire (3, 4 or 5)
KVA
Amps
Watts

SOURCE
☑ Normal Only
☐ Emergency/Standby
☐ Power Quality
☐ Isolated Ground
☐ Dedicated
☐ Conditioned
☐ UPS

CONNECTION
☑ Single Point
☐ Multiple Point
☐ Explosion Proof
☐ Hard Wire
☐ Plug Configuration
☐ Other

Special Requirements

Photo

PROPOSED IN LAB SUITE: 5.1.6

Equipment Data Sheet

Date:

Equipment Item: Chromatography system **Quantit** 1
User Name: Takemoto
Location (lab/room #): BNR306
Frequency and type of use yearly , research
(i.e. daily, weekly, monthly, yearly - teaching, research)

General Information

Manufacturer ISCO
Model Number
Size (width" x depth" x height") 36' x 24" x 24'
Weight (lbs) 50
Mount Location ☐ Floor ☐ Wall ☑ Bench ☐ Ceiling
Mount Type ☐ Fixed ☐ Movable

Mechanical Requirements

	Notes
☐ Exhaust Duct	
☐ Supply Air	
☐ Chilled Water	
☐ Steam	
☐ Other	
☐ Heat Rejection	BTUs:
☐ Alarm Points	

Plumbing Requirements

	Size	Flow	Connection Type
☐ Cold Water			
☐ Hot Water			
☐ Pure Water			
☐ Drain			
☐ Vacuum			
☐ Air			
☐ Natural Gas			
☐ Cylinder 1	Gas:		
☐ Cylinder 2	Gas:		
☐ Other			

Electrical Requirements

LOAD
Volt: 125
Phase (1 or 3)
Wire (3, 4 or 5)
KVA
Amps
Watts

SOURCE
☑ Normal Only
☐ Emergency/Standby
☐ Power Quality
☐ Isolated Ground
☐ Dedicated
☐ Conditioned
☐ UPS

CONNECTION
☐ Single Point
☑ Multiple Point
☐ Explosion Proof
☐ Hard Wire
☐ Plug Configuration
☐ Other

Special Requirements

Photo

PROPOSED IN LAB SUITE: 5.1.6

Equipment Data Sheet

Date 1/23/2016

Equipment Item: water shaking incubator **Quantit** 2
User Name: Takemoto
Location (lab/room #): BNR306
Frequency and type of use daily
(i.e. daily, weekly, monthly, yearly - teaching, research)

General Information

Manufacturer New Brunswick
Model Number G76
Size (width" x depth" x height") 18' x 20" x 24"
Weight (lbs) 30
Mount Location ☐ Floor ☐ Wall ☑ Bench ☐ Ceiling
Mount Type ☐ Fixed ☐ Movable

Mechanical Requirements

	Notes
☐ Exhaust Duct	
☐ Supply Air	
☐ Chilled Water	
☐ Steam	
☐ Other	
☐ Heat Rejection	BTUs:
☐ Alarm Points	

Plumbing Requirements

	Size	Flow	Connection Type
☐ Cold Water			
☐ Hot Water			
☐ Pure Water			
☐ Drain			
☐ Vacuum			
☐ Air			
☐ Natural Gas			
☐ Cylinder 1	Gas:		
☐ Cylinder 2	Gas:		
☐ Other			

Electrical Requirements

LOAD
Volt: 125
Phase (1 or 3)
Wire (3, 4 or 5)
KVA
Amp: 10
Watts

SOURCE
☑ Normal Only
☐ Emergency/Standby
☐ Power Quality
☐ Isolated Ground
☐ Dedicated
☐ Conditioned
☐ UPS

CONNECTION
☑ Single Point
☐ Multiple Point
☐ Explosion Proof
☐ Hard Wire
☐ Plug Configuration
☐ Other

Special Requirements

Photo

PROPOSED IN LAB SUITE: 5.1.6

Equipment Data Sheet

Date 1/23/2016

Equipment Item: incubator **Quantit** 2
User Name: Takemoto
Location (lab/room #): BNR306
Frequency and type of use daily, research
(i.e. daily, weekly, monthly, yearly - teaching, research)

General Information

Manufacturer BINDER
Model Number B28
Size (width" x depth" x height") 24" x 18" x 16"
Weight (lbs) 25
Mount Location ☐ Floor ☐ Wall ☑ Bench ☐ Ceiling
Mount Type ☐ Fixed ☐ Movable

Mechanical Requirements

	Notes
☐ Exhaust Duct	
☐ Supply Air	
☐ Chilled Water	
☐ Steam	
☐ Other	
☐ Heat Rejection	BTUs:
☐ Alarm Points	

Plumbing Requirements

	Size	Flow	Connection Type
☐ Cold Water			
☐ Hot Water			
☐ Pure Water			
☐ Drain			
☐ Vacuum			
☐ Air			
☐ Natural Gas			
☐ Cylinder 1	Gas:		
☐ Cylinder 2	Gas:		
☐ Other			

Electrical Requirements

LOAD
Volt: 125
Phase (1 or 3)
Wire (3, 4 or 5)
KVA
Amps
Watts

SOURCE
☑ Normal Only
☐ Emergency/Standby
☐ Power Quality
☐ Isolated Ground
☐ Dedicated
☐ Conditioned
☐ UPS

CONNECTION
☑ Single Point
☐ Multiple Point
☐ Explosion Proof
☐ Hard Wire
☐ Plug Configuration
☐ Other

Special Requirements

Photo

PROPOSED IN LAB SUITE: 5.1.6

Equipment Data Sheet

Date 1-23=-16

Equipment Item: Inverted light microscope **Quantit** 1
User Name: Takemoto
Location (lab/room #): BNR306
Frequency and type of use weekly
(i.e. daily, weekly, monthly, yearly - teaching, research)

General Information

Manufacturer Zeiss
Model Number 40C
Size (width" x depth" x height") 10" X 20" X 20"
Weight (lbs)
Mount Location ☐ Floor ☐ Wall ☑ Bench ☐ Ceiling
Mount Type ☐ Fixed ☐ Movable

Mechanical Requirements

	Notes
☐ Exhaust Duct	
☐ Supply Air	
☐ Chilled Water	
☐ Steam	
☐ Other	
☐ Heat Rejection	BTUs:
☐ Alarm Points	

Plumbing Requirements

	Size	Flow	Connection Type
☐ Cold Water			
☐ Hot Water			
☐ Pure Water			
☐ Drain			
☐ Vacuum			
☐ Air			
☐ Natural Gas			
☐ Cylinder 1	Gas:		
☐ Cylinder 2	Gas:		
☐ Other			

Electrical Requirements

LOAD
Volt: 125
Phase (1 or 3)
Wire (3, 4 or 5)
KVA
Amps
Watts

SOURCE
☑ Normal Only
☐ Emergency/Standby
☐ Power Quality
☐ Isolated Ground
☐ Dedicated
☐ Conditioned
☐ UPS

CONNECTION
☑ Single Point
☐ Multiple Point
☐ Explosion Proof
☐ Hard Wire
☐ Plug Configuration
☐ Other

Special Requirements

Photo

PROPOSED IN LAB SUITE: 5.1.6

Equipment Data Sheet

Date 1/23/2016

Equipment Item: water bath incubator **Quantity** 1
User Name: Takemoto
Location (lab/room #): BNR306
Frequency and type of use weekly
(i.e. daily, weekly, monthly, yearly - teaching, research)

General Information

Manufacturer VWR
Model Number 1230
Size (width" x depth" x height") 14" X 19" X 12"
Weight (lbs)
Mount Location ☐ Floor ☐ Wall ☑ Bench ☐ Ceiling
Mount Type ☐ Fixed ☐ Movable

Mechanical Requirements

	Notes
☐ Exhaust Duct	
☐ Supply Air	
☐ Chilled Water	
☐ Steam	
☐ Other	
☐ Heat Rejection	BTUs:
☐ Alarm Points	

Plumbing Requirements

	Size	Flow	Connection Type
☐ Cold Water			
☐ Hot Water			
☐ Pure Water			
☐ Drain			
☐ Vacuum			
☐ Air			
☐ Natural Gas			
☐ Cylinder 1	Gas:		
☐ Cylinder 2	Gas:		
☐ Other			

Electrical Requirements

LOAD
Volt: 125
Phase (1 or 3)
Wire (3, 4 or 5)
KVA
Amps
Watts

SOURCE
☑ Normal Only
☐ Emergency/Standby
☐ Power Quality
☐ Isolated Ground
☐ Dedicated
☐ Conditioned
☐ UPS

CONNECTION
☑ Single Point
☐ Multiple Point
☐ Explosion Proof
☐ Hard Wire
☐ Plug Configuration
☐ Other

Special Requirements

Photo

PROPOSED IN LAB SUITE: 5.1.6

Equipment Data Sheet

Date 1/23/2016

Equipment Item: high performance liquid chromatgraphy system **Quantit** 2
User Name: Takemoto
Location (lab/room #): BNR 306A
Frequency and type of use monthly
(i.e. daily, weekly, monthly, yearly - teaching, research)

General Information

Manufacturer: Beckman
Model Number: 127 System Gold
Size (width" x depth" x height"): 36" x 24" x 30"
Weight (lbs): 75
Mount Location: ☐ Floor ☐ Wall ☑ Bench ☐ Ceiling
Mount Type: ☐ Fixed ☐ Movable

Mechanical Requirements

	Notes
☐ Exhaust Duct	
☑ Supply Air	
☐ Chilled Water	
☐ Steam	
☐ Other	
☐ Heat Rejection	BTUs:
☐ Alarm Points	

Plumbing Requirements

	Size	Flow	Connection Type
☑ Cold Water			
☐ Hot Water			
☐ Pure Water			
☑ Drain			
☐ Vacuum			
☑ Air			
☐ Natural Gas			
☑ Cylinder 1	Gas:		
☐ Cylinder 2	Gas:		
☐ Other			

Electrical Requirements

LOAD
Volt: 125
Phase (1 or 3)
Wire (3, 4 or 5)
KVA
Amps
Watts

SOURCE
☑ Normal Only
☐ Emergency/Standby
☐ Power Quality
☐ Isolated Ground
☐ Dedicated
☐ Conditioned
☐ UPS

CONNECTION
☐ Single Point
☑ Multiple Point
☐ Explosion Proof
☐ Hard Wire
☑ Plug Configuration: regular 3 wire
☐ Other

Special Requirements

internet connection

Photo

PROPOSED IN LAB SUITE: 5.1.6

Equipment Data Sheet

Date 12 08 15

Equipment Item: refrigerator **Quantit** 3
User Name: Welker
Location (lab/room #): VSB 313
Frequency and type of use daily
(i.e. daily, weekly, monthly, yearly - teaching, research)

General Information

Manufacturer:
Model Number:
Size (width" x depth" x height"):
Weight (lbs):
Mount Location: ☑ Floor ☐ Wall ☐ Bench ☐ Ceiling
Mount Type: ☐ Fixed ☑ Movable

Mechanical Requirements

	Notes
☐ Exhaust Duct	
☐ Supply Air	
☐ Chilled Water	
☐ Steam	
☐ Other	
☐ Heat Rejection	BTUs:
☐ Alarm Points	

Plumbing Requirements

	Size	Flow	Connection Type
☐ Cold Water			
☐ Hot Water			
☐ Pure Water			
☐ Drain			
☐ Vacuum			
☐ Air			
☐ Natural Gas			
☐ Cylinder 1	Gas:		
☐ Cylinder 2	Gas:		
☐ Other			

Electrical Requirements

LOAD
Volt: 120
Phase (1 or 3)
Wire (3, 4 or 5)
KVA
Amps
Watts

SOURCE
☐ Normal Only
☑ Emergency/Standby
☑ Power Quality
☐ Isolated Ground
☐ Dedicated
☐ Conditioned
☐ UPS

CONNECTION
☐ Single Point
☐ Multiple Point
☐ Explosion Proof
☐ Hard Wire
☑ Plug Configuration
☐ Other

Special Requirements

Photo

PROPOSED IN LAB SUITE: 5.1.6

Equipment Data Sheet

Date: 12 08 15

Equipment Item: freezers **Quantit** 2
User Name: Welker
Location (lab/room #): VSB 313
Frequency and type of use daily
(i.e. daily, weekly, monthly, yearly - teaching, research)

General Information

Manufacturer
Model Number
Size (width" x depth" x height")
Weight (lbs)
Mount Location ☑ Floor ☑ Wall ☐ Bench ☐ Ceiling
Mount Type ☐ Fixed ☐ Movable

Mechanical Requirements

	Notes
☐ Exhaust Duct	
☐ Supply Air	
☐ Chilled Water	
☐ Steam	
☐ Other	
☐ Heat Rejection	BTUs:
☐ Alarm Points	

Plumbing Requirements

	Size	Flow	Connection Type
☐ Cold Water			
☐ Hot Water			
☐ Pure Water			
☐ Drain			
☐ Vacuum			
☐ Air			
☐ Natural Gas			
☐ Cylinder 1	Gas:		
☐ Cylinder 2	Gas:		
☐ Other			

Electrical Requirements

LOAD
Volts 120
Phase (1 or 3)
Wire (3, 4 or 5)
KVA
Amps
Watts

SOURCE
☐ Normal Only
☑ Emergency/Standby
☑ Power Quality
☐ Isolated Ground
☐ Dedicated
☐ Conditioned
☐ UPS

CONNECTION
☐ Single Point
☐ Multiple Point
☐ Explosion Proof
☐ Hard Wire
☑ Plug Configuration
☐ Other

Special Requirements

Photo

PROPOSED IN LAB SUITE: 5.1.6

Equipment Data Sheet

Date: 12 08 15

Equipment Item: ultra cold freezer **Quantit** 1
User Name: Welker
Location (lab/room #): VSB 313
Frequency and type of use daily
(i.e. daily, weekly, monthly, yearly - teaching, research)

General Information

Manufacturer
Model Number
Size (width" x depth" x height") 36 36 72
Weight (lbs) 400
Mount Location ☑ Floor ☐ Wall ☐ Bench ☐ Ceiling
Mount Type ☐ Fixed ☑ Movable

Mechanical Requirements

	Notes
☐ Exhaust Duct	
☐ Supply Air	
☐ Chilled Water	
☐ Steam	
☐ Other	
☐ Heat Rejection	BTUs:
☐ Alarm Points	

Plumbing Requirements

	Size	Flow	Connection Type
☐ Cold Water			
☐ Hot Water			
☐ Pure Water			
☐ Drain			
☐ Vacuum			
☐ Air			
☐ Natural Gas			
☐ Cylinder 1	Gas:		
☐ Cylinder 2	Gas:		
☐ Other			

Electrical Requirements

LOAD
Volt: 220
Phase (1 or 3)
Wire (3, 4 or 5)
KVA
Amps
Watts

SOURCE
☐ Normal Only
☑ Emergency/Standby
☑ Power Quality
☐ Isolated Ground
☐ Dedicated
☐ Conditioned
☐ UPS

CONNECTION
☐ Single Point
☐ Multiple Point
☐ Explosion Proof
☐ Hard Wire
☑ Plug Configuration
☐ Other

Special Requirements

Photo

PROPOSED IN LAB SUITE: 5.1.6

Equipment Data Sheet

Date: 12 08 15

Equipment Item: large cetrifuges **Quantit** 2
User Name: Welker
Location (lab/room #): Vsb 313
Frequency and type of use daily
(i.e. daily, weekly, monthly, yearly - teaching, research)

General Information

Manufacturer
Model Number
Size (width" x depth" x height") 40 36 4
Weight (lbs)
Mount Location ☑ Floor ☑ Wall ☐ Bench ☐ Ceiling
Mount Type ☐ Fixed ☐ Movable

Mechanical Requirements

	Notes
☐ Exhaust Duct	
☐ Supply Air	
☐ Chilled Water	
☐ Steam	
☐ Other	
☐ Heat Rejection	BTUs:
☐ Alarm Points	

Plumbing Requirements

	Size	Flow	Connection Type
☐ Cold Water			
☐ Hot Water			
☐ Pure Water			
☐ Drain			
☐ Vacuum			
☐ Air			
☐ Natural Gas			
☐ Cylinder 1	Gas:		
☐ Cylinder 2	Gas:		
☐ Other			

Electrical Requirements

LOAD
Volts 220
Phase (1 or 3)
Wire (3, 4 or 5)
KVA
Amps
Watts

SOURCE
☐ Normal Only
☑ Emergency/Standby
☑ Power Quality
☐ Isolated Ground
☐ Dedicated
☐ Conditioned
☐ UPS

CONNECTION
☐ Single Point
☐ Multiple Point
☐ Explosion Proof
☐ Hard Wire
☑ Plug Configuration
☐ Other

Special Requirements

Photo

PROPOSED IN LAB SUITE: 5.1.6

Equipment Data Sheet

Date: 12 08 15

Equipment Item: biological hood **Quantit** 1
User Name: Welker
Location (lab/room #): VSB 313
Frequency and type of use weekly
(i.e. daily, weekly, monthly, yearly - teaching, research)

General Information

Manufacturer
Model Number
Size (width" x depth" x height") 60 36 72
Weight (lbs) 300
Mount Location ☑ Floor ☐ Wall ☐ Bench ☐ Ceiling
Mount Type ☐ Fixed ☑ Movable

Mechanical Requirements

	Notes
☐ Exhaust Duct	
☐ Supply Air	
☐ Chilled Water	
☐ Steam	
☐ Other	
☐ Heat Rejection	BTUs:
☐ Alarm Points	

Plumbing Requirements

	Size	Flow	Connection Type
☐ Cold Water			
☐ Hot Water			
☐ Pure Water			
☐ Drain			
☐ Vacuum			
☐ Air			
☐ Natural Gas			
☐ Cylinder 1	Gas:		
☐ Cylinder 2	Gas:		
☐ Other			

Electrical Requirements

LOAD
Volt: 120
Phase (1 or 3)
Wire (3, 4 or 5)
KVA
Amps
Watts

SOURCE
☑ Normal Only
☐ Emergency/Standby
☐ Power Quality
☐ Isolated Ground
☐ Dedicated
☐ Conditioned
☐ UPS

CONNECTION
☐ Single Point
☐ Multiple Point
☐ Explosion Proof
☐ Hard Wire
☑ Plug Configuration
☐ Other

Special Requirements

Photo

PROPOSED IN LAB SUITE: 5.1.6

Equipment Data Sheet

Date: 12 08 15

Equipment Item: fume hood **Quantit** 1
User Name: Welker
Location (lab/room #): VSB 313
Frequency and type of use daily
(i.e. daily, weekly, monthly, yearly - teaching, research)

General Information

Manufacturer
Model Number
Size (width" x depth" x height") 48 36 72
Weight (lbs)
Mount Location ☑ Floor ☐ Wall ☐ Bench ☐ Ceiling
Mount Type ☑ Fixed ☐ Movable

Mechanical Requirements

	Notes
☑ Exhaust Duct	
☐ Supply Air	
☑ Chilled Water	
☐ Steam	
☐ Other	
☐ Heat Rejection	BTUs:
☐ Alarm Points	

Plumbing Requirements

	Size	Flow	Connection Type
☑ Cold Water			
☐ Hot Water			
☑ Pure Water			
☑ Drain			
☑ Vacuum			
☑ Air			
☐ Natural Gas			
☐ Cylinder 1	Gas:		
☐ Cylinder 2	Gas:		
☐ Other			

Electrical Requirements

LOAD
Volts 120
Phase (1 or 3)
Wire (3, 4 or 5)
KVA
Amps
Watts

SOURCE
☑ Normal Only
☐ Emergency/Standby
☐ Power Quality
☐ Isolated Ground
☐ Dedicated
☐ Conditioned
☐ UPS

CONNECTION
☐ Single Point
☐ Multiple Point
☐ Explosion Proof
☑ Hard Wire
☐ Plug Configuration
☐ Other

Special Requirements

Photo

PROPOSED IN LAB SUITE: 5.1.6

Equipment Data Sheet

Date 12 08 15

Equipment Item: incubators **Quantit** 3
User Name: Welker
Location (lab/room #): VSB 313
Frequency and type of use daily
(i.e. daily, weekly, monthly, yearly - teaching, research)

General Information

Manufacturer
Model Number
Size (width" x depth" x height") 36 36 72
Weight (lbs)
Mount Location ☑ Floor ☑ Wall ☐ Bench ☐ Ceiling
Mount Type ☐ Fixed ☐ Movable

Mechanical Requirements

	Notes
☐ Exhaust Duct	
☐ Supply Air	
☐ Chilled Water	
☐ Steam	
☐ Other	
☐ Heat Rejection	BTUs:
☐ Alarm Points	

Plumbing Requirements

	Size	Flow	Connection Type
☐ Cold Water			
☐ Hot Water			
☐ Pure Water			
☐ Drain			
☐ Vacuum			
☐ Air			
☐ Natural Gas			
☐ Cylinder 1	Gas:		
☐ Cylinder 2	Gas:		
☐ Other			

Electrical Requirements

LOAD
Volt: 120
Phase (1 or 3)
Wire (3, 4 or 5)
KVA
Amps
Watts

SOURCE
☐ Normal Only
☑ Emergency/Standby
☑ Power Quality
☐ Isolated Ground
☐ Dedicated
☐ Conditioned
☐ UPS

CONNECTION
☐ Single Point
☐ Multiple Point
☐ Explosion Proof
☐ Hard Wire
☑ Plug Configuration
☐ Other

Special Requirements

Photo

PROPOSED IN LAB SUITE: 5.1.5

Equipment Data Sheet

Date:

Equipment Item: freezer **Quantit** 1
User Name: Wolf
Location (lab/room #): BNR 46
Frequency and type of use Daily
(i.e. daily, weekly, monthly, yearly - teaching, research)

General Information

Manufacturer
Model Number
Size (width" x depth" x height") 36 x 34 x 68
Weight (lbs)
Mount Location ☑ Floor ☐ Wall ☐ Bench ☐ Ceiling
Mount Type ☐ Fixed ☐ Movable

Mechanical Requirements

	Notes
☐ Exhaust Duct	
☐ Supply Air	
☐ Chilled Water	
☐ Steam	
☐ Other	
☐ Heat Rejection	BTUs:
☐ Alarm Points	

Plumbing Requirements

	Size	Flow	Connection Type
☐ Cold Water			
☐ Hot Water			
☐ Pure Water			
☐ Drain			
☐ Vacuum			
☐ Air			
☐ Natural Gas			
☐ Cylinder 1	Gas:		
☐ Cylinder 2	Gas:		
☐ Other			

Electrical Requirements

LOAD
Volts
Phase (1 or 3)
Wire (3, 4 or 5)
KVA
Amps
Watts

SOURCE
☐ Normal Only
☐ Emergency/Standby
☐ Power Quality
☐ Isolated Ground
☐ Dedicated
☐ Conditioned
☐ UPS

CONNECTION
☐ Single Point
☐ Multiple Point
☐ Explosion Proof
☐ Hard Wire
☐ Plug Configuration
☐ Other

Special Requirements

Photo

PROPOSED IN LAB SUITE: 5.1.5

Equipment Data Sheet

Date:

Equipment Item: fridge **Quantit** 2
User Name: Wolf
Location (lab/room #):
Frequency and type of use
(i.e. daily, weekly, monthly, yearly - teaching, research)

General Information

Manufacturer
Model Number
Size (width" x depth" x height") 29 x 29 x 65
Weight (lbs)
Mount Location ☑ Floor ☐ Wall ☐ Bench ☐ Ceiling
Mount Type ☐ Fixed ☐ Movable

Mechanical Requirements

	Notes
☐ Exhaust Duct	
☐ Supply Air	
☐ Chilled Water	
☐ Steam	
☐ Other	
☐ Heat Rejection	BTUs:
☐ Alarm Points	

Plumbing Requirements

	Size	Flow	Connection Type
☐ Cold Water			
☐ Hot Water			
☐ Pure Water			
☐ Drain			
☐ Vacuum			
☐ Air			
☐ Natural Gas			
☐ Cylinder 1	Gas:		
☐ Cylinder 2	Gas:		
☐ Other			

Electrical Requirements

LOAD
Volts
Phase (1 or 3)
Wire (3, 4 or 5)
KVA
Amps
Watts

SOURCE
☑ Normal Only
☐ Emergency/Standby
☐ Power Quality
☐ Isolated Ground
☐ Dedicated
☐ Conditioned
☐ UPS

CONNECTION
☐ Single Point
☐ Multiple Point
☐ Explosion Proof
☐ Hard Wire
☐ Plug Configuration
☐ Other

Special Requirements

Photo

PROPOSED IN LAB SUITE: 5.1.5

Equipment Data Sheet

Date:

Equipment Item: ice machine **Quantit** 1
User Name: Wolf
Location (lab/room #):
Frequency and type of use
(i.e. daily, weekly, monthly, yearly - teaching, research)

General Information

Manufacturer
Model Number
Size (width" x depth" x height") 24 x 43 x 70
Weight (lbs)
Mount Location ☑ Floor ☐ Wall ☐ Bench ☐ Ceiling
Mount Type ☑ Fixed ☐ Movable

Mechanical Requirements

	Notes
☐ Exhaust Duct	
☐ Supply Air	
☐ Chilled Water	
☐ Steam	
☐ Other	
☐ Heat Rejection	BTUs:
☐ Alarm Points	

Plumbing Requirements

	Size	Flow	Connection Type
☑ Cold Water			
☐ Hot Water			
☐ Pure Water			
☐ Drain			
☐ Vacuum			
☐ Air			
☐ Natural Gas			
☐ Cylinder 1	Gas:		
☐ Cylinder 2	Gas:		
☐ Other			

Electrical Requirements

LOAD
Volts
Phase (1 or 3)
Wire (3, 4 or 5)
KVA
Amps
Watts

SOURCE
☐ Normal Only
☐ Emergency/Standby
☐ Power Quality
☐ Isolated Ground
☐ Dedicated
☐ Conditioned
☐ UPS

CONNECTION
☑ Single Point
☐ Multiple Point
☐ Explosion Proof
☑ Hard Wire
☐ Plug Configuration ?
☐ Other

Special Requirements

Photo

PROPOSED IN LAB SUITE: 5.1.5

Equipment Data Sheet

Date:

Equipment Item: microwave **Quantity:**
User Name: Wolf
Location (lab/room #):
Frequency and type of use
(i.e. daily, weekly, monthly, yearly - teaching, research)

General Information

Manufacturer
Model Number
Size (width" x depth" x height") 24 x 18 x 14
Weight (lbs)
Mount Location ☐ Floor ☐ Wall ☑ Bench ☐ Ceiling
Mount Type ☐ Fixed ☐ Movable

Mechanical Requirements

	Notes
☐ Exhaust Duct	
☐ Supply Air	
☐ Chilled Water	
☐ Steam	
☐ Other	
☐ Heat Rejection	BTUs:
☐ Alarm Points	

Plumbing Requirements

	Size	Flow	Connection Type
☐ Cold Water			
☐ Hot Water			
☐ Pure Water			
☐ Drain			
☐ Vacuum			
☐ Air			
☐ Natural Gas			
☐ Cylinder 1	Gas:		
☐ Cylinder 2	Gas:		
☐ Other			

Electrical Requirements

LOAD
Volts
Phase (1 or 3)
Wire (3, 4 or 5)
KVA
Amps
Watts

SOURCE
☐ Normal Only
☐ Emergency/Standby
☐ Power Quality
☐ Isolated Ground
☐ Dedicated
☐ Conditioned
☐ UPS

CONNECTION
☐ Single Point
☐ Multiple Point
☐ Explosion Proof
☐ Hard Wire
☐ Plug Configuration
☐ Other

Special Requirements

Photo

PROPOSED IN LAB SUITE: 5.1.5

Equipment Data Sheet

Date:

Equipment Item: Water bath **Quantit** 1
User Name: Wolf
Location (lab/room #):
Frequency and type of use
(i.e. daily, weekly, monthly, yearly - teaching, research)

General Information

Manufacturer
Model Number
Size (width" x depth" x height") 16 x 20 x 14
Weight (lbs)
Mount Location ☐ Floor ☐ Wall ☑ Bench ☐ Ceiling
Mount Type ☐ Fixed ☐ Movable

Mechanical Requirements

	Notes
☐ Exhaust Duct	
☐ Supply Air	
☐ Chilled Water	
☐ Steam	
☐ Other	
☐ Heat Rejection	BTUs:
☐ Alarm Points	

Plumbing Requirements

	Size	Flow	Connection Type
☐ Cold Water			
☐ Hot Water			
☐ Pure Water			
☐ Drain			
☐ Vacuum			
☐ Air			
☐ Natural Gas			
☐ Cylinder 1	Gas:		
☐ Cylinder 2	Gas:		
☐ Other			

Electrical Requirements

LOAD
Volts
Phase (1 or 3)
Wire (3, 4 or 5)
KVA
Amps
Watts

SOURCE
☐ Normal Only
☐ Emergency/Standby
☐ Power Quality
☐ Isolated Ground
☐ Dedicated
☐ Conditioned
☐ UPS

CONNECTION
☐ Single Point
☐ Multiple Point
☐ Explosion Proof
☐ Hard Wire
☐ Plug Configuration
☐ Other

Special Requirements

Photo

PROPOSED IN LAB SUITE: 5.1.5

Equipment Data Sheet

Date:

Equipment Item: carts **Quantit** 2
User Name: Wolf
Location (lab/room #):
Frequency and type of use
(i.e. daily, weekly, monthly, yearly - teaching, research)

General Information

Manufacturer
Model Number
Size (width" x depth" x height") 36 x 25 x 37
Weight (lbs)
Mount Location ☑ Floor ☐ Wall ☐ Bench ☐ Ceiling
Mount Type ☐ Fixed ☑ Movable

Mechanical Requirements

	Notes
☐ Exhaust Duct	
☐ Supply Air	
☐ Chilled Water	
☐ Steam	
☐ Other	
☐ Heat Rejection	BTUs:
☐ Alarm Points	

Plumbing Requirements

	Size	Flow	Connection Type
☐ Cold Water			
☐ Hot Water			
☐ Pure Water			
☐ Drain			
☐ Vacuum			
☐ Air			
☐ Natural Gas			
☐ Cylinder 1	Gas:		
☐ Cylinder 2	Gas:		
☐ Other			

Electrical Requirements

LOAD
Volts
Phase (1 or 3)
Wire (3, 4 or 5)
KVA
Amps
Watts

SOURCE
☐ Normal Only
☐ Emergency/Standby
☐ Power Quality
☐ Isolated Ground
☐ Dedicated
☐ Conditioned
☐ UPS

CONNECTION
☐ Single Point
☐ Multiple Point
☐ Explosion Proof
☐ Hard Wire
☐ Plug Configuration
☐ Other

Special Requirements

Photo

PROPOSED IN LAB SUITE: 5.1.5

Equipment Data Sheet

Date:

Equipment Item: Incubators **Quantit** 1
User Name: Wolf
Location (lab/room #):
Frequency and type of use
(i.e. daily, weekly, monthly, yearly - teaching, research)

General Information

Manufacturer
Model Number
Size (width" x depth" x height") 22 x 20 x 26
Weight (lbs)
Mount Location ☐ Floor ☐ Wall ☑ Bench ☐ Ceiling
Mount Type ☐ Fixed ☐ Movable

Mechanical Requirements

	Notes
☐ Exhaust Duct	
☐ Supply Air	
☐ Chilled Water	
☐ Steam	
☐ Other	
☐ Heat Rejection	BTUs:
☐ Alarm Points	

Plumbing Requirements

	Size	Flow	Connection Type
☐ Cold Water			
☐ Hot Water			
☐ Pure Water			
☐ Drain			
☐ Vacuum			
☐ Air			
☐ Natural Gas			
☐ Cylinder 1	Gas:		
☐ Cylinder 2	Gas:		
☐ Other			

Electrical Requirements

LOAD
Volts
Phase (1 or 3)
Wire (3, 4 or 5)
KVA
Amps
Watts

SOURCE
☑ Normal Only
☐ Emergency/Standby
☐ Power Quality
☐ Isolated Ground
☐ Dedicated
☐ Conditioned
☐ UPS

CONNECTION
☑ Single Point
☐ Multiple Point
☐ Explosion Proof
☐ Hard Wire
☐ Plug Configuration
☐ Other

Special Requirements

Photo

PROPOSED IN LAB SUITE: 5.1.5

Equipment Data Sheet

Date:

Equipment Item: Shaker **Quantit** 1
User Name: Wolf
Location (lab/room #):
Frequency and type of use
(i.e. daily, weekly, monthly, yearly - teaching, research)

General Information

Manufacturer
Model Number
Size (width" x depth" x height") 17 x 15 x 20
Weight (lbs)
Mount Location ☐ Floor ☐ Wall ☑ Bench ☐ Ceiling
Mount Type ☐ Fixed ☐ Movable

Mechanical Requirements

	Notes
☐ Exhaust Duct	
☐ Supply Air	
☐ Chilled Water	
☐ Steam	
☐ Other	
☐ Heat Rejection	BTUs:
☐ Alarm Points	

Plumbing Requirements

	Size	Flow	Connection Type
☐ Cold Water			
☐ Hot Water			
☐ Pure Water			
☐ Drain			
☐ Vacuum			
☐ Air			
☐ Natural Gas			
☐ Cylinder 1	Gas:		
☐ Cylinder 2	Gas:		
☐ Other			

Electrical Requirements

LOAD
Volts
Phase (1 or 3)
Wire (3, 4 or 5)
KVA
Amps
Watts

SOURCE
☑ Normal Only
☐ Emergency/Standby
☐ Power Quality
☐ Isolated Ground
☐ Dedicated
☐ Conditioned
☐ UPS

CONNECTION
☑ Single Point
☐ Multiple Point
☐ Explosion Proof
☐ Hard Wire
☐ Plug Configuration
☐ Other

Special Requirements

Photo

PROPOSED IN LAB SUITE: 5.1.5

Equipment Data Sheet

Date:

Equipment Item: transilluminator **Quantit** 1
User Name: Wolf
Location (lab/room #):
Frequency and type of use
(i.e. daily, weekly, monthly, yearly - teaching, research)

General Information

Manufacturer
Model Number
Size (width" x depth" x height") 20 x 20 x 20
Weight (lbs)
Mount Location ☐ Floor ☐ Wall ☑ Bench ☐ Ceiling
Mount Type ☐ Fixed ☐ Movable

Mechanical Requirements

	Notes
☐ Exhaust Duct	
☐ Supply Air	
☐ Chilled Water	
☐ Steam	
☐ Other	
☐ Heat Rejection	BTUs:
☐ Alarm Points	

Plumbing Requirements

	Size	Flow	Connection Type
☐ Cold Water			
☐ Hot Water			
☐ Pure Water			
☐ Drain			
☐ Vacuum			
☐ Air			
☐ Natural Gas			
☐ Cylinder 1	Gas:		
☐ Cylinder 2	Gas:		
☐ Other			

Electrical Requirements

LOAD
Volts
Phase (1 or 3)
Wire (3, 4 or 5)
KVA
Amps
Watts

SOURCE
☑ Normal Only
☐ Emergency/Standby
☐ Power Quality
☐ Isolated Ground
☐ Dedicated
☐ Conditioned
☐ UPS

CONNECTION
☑ Single Point
☐ Multiple Point
☐ Explosion Proof
☐ Hard Wire
☐ Plug Configuration
☐ Other

Special Requirements

Photo

PROPOSED IN LAB SUITE: 5.1.5

Equipment Data Sheet

Date:

Equipment Item: Gel documentation syste **Quantit** 1
User Name: Wolf
Location (lab/room #):
Frequency and type of use
(i.e. daily, weekly, monthly, yearly - teaching, research)

General Information

Manufacturer
Model Number
Size (width" x depth" x height") 30 x 30 x 45
Weight (lbs)
Mount Location ☐ Floor ☐ Wall ☐ Bench ☐ Ceiling
Mount Type ☐ Fixed ☐ Movable

Mechanical Requirements

	Notes
☐ Exhaust Duct	
☐ Supply Air	
☐ Chilled Water	
☐ Steam	
☐ Other	
☐ Heat Rejection	BTUs:
☐ Alarm Points	

Plumbing Requirements

	Size	Flow	Connection Type
☐ Cold Water			
☐ Hot Water			
☐ Pure Water			
☐ Drain			
☐ Vacuum			
☐ Air			
☐ Natural Gas			
☐ Cylinder 1	Gas:		
☐ Cylinder 2	Gas:		
☐ Other			

Electrical Requirements

LOAD
Volts
Phase (1 or 3)
Wire (3, 4 or 5)
KVA
Amps
Watts

SOURCE
☐ Normal Only
☐ Emergency/Standby
☐ Power Quality
☐ Isolated Ground
☐ Dedicated
☐ Conditioned
☐ UPS

CONNECTION
☑ Single Point
☐ Multiple Point
☐ Explosion Proof
☐ Hard Wire
☐ Plug Configuration
☐ Other

Special Requirements

Photo

PROPOSED IN LAB SUITE: 5.1.5

Equipment Data Sheet

Date:

Equipment Item: large waterbath **Quantit** 1
User Name: Wolf
Location (lab/room #):
Frequency and type of use
(i.e. daily, weekly, monthly, yearly - teaching, research)

General Information

Manufacturer
Model Number
Size (width" x depth" x height") 37 x 15 x 17
Weight (lbs)
Mount Location ☐ Floor ☐ Wall ☑ Bench ☐ Ceiling
Mount Type ☐ Fixed ☐ Movable

Mechanical Requirements

	Notes
☐ Steam	
☐ Exhaust Duct	
☐ Supply Air	
☐ Chilled Water	
☐ Steam	
☐ Other	
☐ Heat Rejection	BTUs:
☐ Alarm Points	

Plumbing Requirements

	Size	Flow	Connection Type
☐ Cold Water			
☐ Hot Water			
☐ Pure Water			
☐ Drain			
☐ Vacuum			
☐ Air			
☐ Natural Gas			
☐ Cylinder 1	Gas:		
☐ Cylinder 2	Gas:		
☐ Other			

Electrical Requirements

LOAD
Volts
Phase (1 or 3)
Wire (3, 4 or 5)
KVA
Amps
Watts

SOURCE
☐ Normal Only
☐ Emergency/Standby
☐ Power Quality
☐ Isolated Ground
☐ Dedicated
☐ Conditioned
☐ UPS

CONNECTION
☐ Single Point
☐ Multiple Point
☐ Explosion Proof
☐ Hard Wire
☐ Plug Configuration
☐ Other

Special Requirements

Photo

PROPOSED IN LAB SUITE: 5.1.5

Equipment Data Sheet

Date:

Equipment Item: large centrifuge **Quantit** 3
User Name: Wolf
Location (lab/room #):
Frequency and type of use
(i.e. daily, weekly, monthly, yearly - teaching, research)

General Information

Manufacturer
Model Number
Size (width" x depth" x height") 14 x 25 x 24
Weight (lbs)
Mount Location ☐ Floor ☐ Wall ☑ Bench ☐ Ceiling
Mount Type ☐ Fixed ☐ Movable

Mechanical Requirements

	Notes
☐ Steam	
☐ Exhaust Duct	
☐ Supply Air	
☐ Chilled Water	
☐ Steam	
☐ Other	
☐ Heat Rejection	BTUs:
☐ Alarm Points	

Plumbing Requirements

	Size	Flow	Connection Type
☐ Cold Water			
☐ Hot Water			
☐ Pure Water			
☐ Drain			
☐ Vacuum			
☐ Air			
☐ Natural Gas			
☐ Cylinder 1	Gas:		
☐ Cylinder 2	Gas:		
☐ Other			

Electrical Requirements

LOAD
Volts
Phase (1 or 3)
Wire (3, 4 or 5)
KVA
Amps
Watts

SOURCE
☑ Normal Only
☐ Emergency/Standby
☐ Power Quality
☐ Isolated Ground
☐ Dedicated
☐ Conditioned
☐ UPS

CONNECTION
☑ Single Point
☐ Multiple Point
☐ Explosion Proof
☐ Hard Wire
☐ Plug Configuration
☐ Other

Special Requirements

Photo

PROPOSED IN LAB SUITE: 5.1.5

Equipment Data Sheet

Date:

Equipment Item: 96 - well plate centrifuge **Quantit** 1
User Name: Wolf
Location (lab/room #):
Frequency and type of use
(i.e. daily, weekly, monthly, yearly - teaching, research)

General Information

Manufacturer
Model Number
Size (width" x depth" x height") 28 x 28 x 35
Weight (lbs)
Mount Location ☐ Floor ☐ Wall ☑ Bench ☐ Ceiling
Mount Type ☐ Fixed ☐ Movable

Mechanical Requirements

	Notes
☐ Steam	
☐ Exhaust Duct	
☐ Supply Air	
☐ Chilled Water	
☐ Steam	
☐ Other	
☐ Heat Rejection	BTUs:
☐ Alarm Points	

Plumbing Requirements

	Size	Flow	Connection Type
☐ Cold Water			
☐ Hot Water			
☐ Pure Water			
☐ Drain			
☐ Vacuum			
☐ Air			
☐ Natural Gas			
☐ Cylinder 1	Gas:		
☐ Cylinder 2	Gas:		
☐ Other			

Electrical Requirements

LOAD
Volts
Phase (1 or 3)
Wire (3, 4 or 5)
KVA
Amps
Watts

SOURCE
☑ Normal Only
☐ Emergency/Standby
☐ Power Quality
☐ Isolated Ground
☐ Dedicated
☐ Conditioned
☐ UPS

CONNECTION
☑ Single Point
☐ Multiple Point
☐ Explosion Proof
☐ Hard Wire
☐ Plug Configuration
☐ Other

Special Requirements

Photo

PROPOSED IN LAB SUITE: 5.1.5

Equipment Data Sheet

Date:

Equipment Item: Speed vac **Quantit** 1
User Name: Wolf
Location (lab/room #):
Frequency and type of use
(i.e. daily, weekly, monthly, yearly - teaching, research)

General Information

Manufacturer
Model Number
Size (width" x depth" x height") 27 x 27 x 24
Weight (lbs)
Mount Location ☐ Floor ☐ Wall ☑ Bench ☐ Ceiling
Mount Type ☐ Fixed ☐ Movable

Mechanical Requirements

	Notes
☐ Steam	
☐ Exhaust Duct	
☐ Supply Air	
☐ Chilled Water	
☐ Steam	
☐ Other	
☐ Heat Rejection	BTUs:
☐ Alarm Points	

Plumbing Requirements

	Size	Flow	Connection Type
☐ Cold Water			
☐ Hot Water			
☐ Pure Water			
☐ Drain			
☐ Vacuum			
☐ Air			
☐ Natural Gas			
☐ Cylinder 1	Gas:		
☐ Cylinder 2	Gas:		
☐ Other			

Electrical Requirements

LOAD
Volts
Phase (1 or 3)
Wire (3, 4 or 5)
KVA
Amps
Watts

SOURCE
☑ Normal Only
☐ Emergency/Standby
☐ Power Quality
☐ Isolated Ground
☐ Dedicated
☐ Conditioned
☐ UPS

CONNECTION
☑ Single Point
☐ Multiple Point
☐ Explosion Proof
☐ Hard Wire
☐ Plug Configuration
☐ Other

Special Requirements

Photo

PROPOSED IN LAB SUITE: 5.1.5

Equipment Data Sheet

Date:

Equipment Item: Microbalance **Quantity** 1
User Name: Wolf
Location (lab/room #):
Frequency and type of use
(i.e. daily, weekly, monthly, yearly - teaching, research)

General Information

Manufacturer
Model Number
Size (width" x depth" x height") 9 x 20 x 12
Weight (lbs)
Mount Location ☐ Floor ☐ Wall ☑ Bench ☐ Ceiling
Mount Type ☐ Fixed ☑ Movable

Mechanical Requirements

	Notes
☐ Steam	
☐ Exhaust Duct	
☐ Supply Air	
☐ Chilled Water	
☐ Steam	
☐ Other	
☐ Heat Rejection	BTUs:
☐ Alarm Points	

Plumbing Requirements

	Size	Flow	Connection Type
☐ Cold Water			
☐ Hot Water			
☐ Pure Water			
☐ Drain			
☐ Vacuum			
☐ Air			
☐ Natural Gas			
☐ Cylinder 1	Gas:		
☐ Cylinder 2	Gas:		
☐ Other			

Electrical Requirements

LOAD	SOURCE	CONNECTION
Volts	☑ Normal Only	☑ Single Point
Phase (1 or 3)	☐ Emergency/Standby	☐ Multiple Point
Wire (3, 4 or 5)	☐ Power Quality	☐ Explosion Proof
KVA	☐ Isolated Ground	☐ Hard Wire
Amps	☐ Dedicated	☐ Plug Configuration
Watts	☐ Conditioned	
	☐ UPS	☐ Other

Special Requirements

Photo

PROPOSED IN LAB SUITE: 5.1.5

Equipment Data Sheet

Date:

Equipment Item: Ph meter **Quantity** 1
User Name: Wolf
Location (lab/room #):
Frequency and type of use
(i.e. daily, weekly, monthly, yearly - teaching, research)

General Information

Manufacturer
Model Number
Size (width" x depth" x height") 12 x 14 x 18
Weight (lbs)
Mount Location ☐ Floor ☐ Wall ☑ Bench ☐ Ceiling
Mount Type ☐ Fixed ☐ Movable

Mechanical Requirements

	Notes
☐ Steam	
☐ Exhaust Duct	
☐ Supply Air	
☐ Chilled Water	
☐ Steam	
☐ Other	
☐ Heat Rejection	BTUs:
☐ Alarm Points	

Plumbing Requirements

	Size	Flow	Connection Type
☐ Cold Water			
☐ Hot Water			
☐ Pure Water			
☐ Drain			
☐ Vacuum			
☐ Air			
☐ Natural Gas			
☐ Cylinder 1	Gas:		
☐ Cylinder 2	Gas:		
☐ Other			

Electrical Requirements

LOAD	SOURCE	CONNECTION
Volts	☑ Normal Only	☑ Single Point
Phase (1 or 3)	☐ Emergency/Standby	☐ Multiple Point
Wire (3, 4 or 5)	☐ Power Quality	☐ Explosion Proof
KVA	☐ Isolated Ground	☐ Hard Wire
Amps	☐ Dedicated	☐ Plug Configuration
Watts	☐ Conditioned	
	☐ UPS	☐ Other

Special Requirements

Photo

PROPOSED IN LAB SUITE: 5.1.5

Equipment Data Sheet

Date:

Equipment Item: thermocyclers **Quantit** 3
User Name: Wolf
Location (lab/room #):
Frequency and type of use
(i.e. daily, weekly, monthly, yearly - teaching, research)

General Information

Manufacturer
Model Number
Size (width" x depth" x height") 20 x 25 x 20
Weight (lbs)
Mount Location ☐ Floor ☐ Wall ☑ Bench ☐ Ceiling
Mount Type ☐ Fixed ☑ Movable

Mechanical Requirements

	Notes
☐ Steam	
☐ Exhaust Duct	
☐ Supply Air	
☐ Chilled Water	
☐ Steam	
☐ Other	
☐ Heat Rejection	BTUs:
☐ Alarm Points	

Plumbing Requirements

	Size	Flow	Connection Type
☐ Cold Water			
☐ Hot Water			
☐ Pure Water			
☐ Drain			
☐ Vacuum			
☐ Air			
☐ Natural Gas			
☐ Cylinder 1	Gas:		
☐ Cylinder 2	Gas:		
☐ Other			

Electrical Requirements

LOAD	SOURCE	CONNECTION
Volts	☑ Normal Only	☑ Single Point
Phase (1 or 3)	☐ Emergency/Standby	☐ Multiple Point
Wire (3, 4 or 5)	☐ Power Quality	☐ Explosion Proof
KVA	☐ Isolated Ground	☐ Hard Wire
Amps	☐ Dedicated	☐ Plug Configuration
Watts	☐ Conditioned	
	☐ UPS	☐ Other

Special Requirements

Photo

PROPOSED IN LAB SUITE: 5.1.5

Equipment Data Sheet

Date:

Equipment Item: gel rigs **Quantit** 3
User Name: Wolf
Location (lab/room #):
Frequency and type of use
(i.e. daily, weekly, monthly, yearly - teaching, research)

General Information

Manufacturer
Model Number
Size (width" x depth" x height") 12 x 20 x 12
Weight (lbs)
Mount Location ☐ Floor ☐ Wall ☑ Bench ☐ Ceiling
Mount Type ☐ Fixed ☑ Movable

Mechanical Requirements

	Notes
☐ Steam	
☐ Exhaust Duct	
☐ Supply Air	
☐ Chilled Water	
☐ Steam	
☐ Other	
☐ Heat Rejection	BTUs:
☐ Alarm Points	

Plumbing Requirements

	Size	Flow	Connection Type
☐ Cold Water			
☐ Hot Water			
☐ Pure Water			
☐ Drain			
☐ Vacuum			
☐ Air			
☐ Natural Gas			
☐ Cylinder 1	Gas:		
☐ Cylinder 2	Gas:		
☐ Other			

Electrical Requirements

LOAD	SOURCE	CONNECTION
Volts	☐ Normal Only	☐ Single Point
Phase (1 or 3)	☐ Emergency/Standby	☐ Multiple Point
Wire (3, 4 or 5)	☐ Power Quality	☐ Explosion Proof
KVA	☐ Isolated Ground	☐ Hard Wire
Amps	☐ Dedicated	☐ Plug Configuration
Watts	☐ Conditioned	
	☐ UPS	☐ Other

Special Requirements

Photo

6.3 Tier 2 Seismic Analysis for the BNR Building

The following report was prepared for an early discussion on the scope of seismic upgrades to the BNR Building:

REAVELEY
ENGINEERS + ASSOCIATES
Consulting Structural Engineers

October 13, 2015

Kathy Wheadon, AIA
Joe Milillo, AIA
CRSA Architects

Re: USU BNR Building Seismic Evaluation

Dear Kathy and Joe,

We have studied the existing BNR Building's seismic performance capacity to the extent that we understand the level of deficiency of the building and whether or not we can bring the building into compliance by only reinforcing existing structural members. The conclusion is that it would be more expensive to do that than to add new lateral elements to the building.

The ASCE 41 Tier 2 and Tier 3 evaluation procedures take into account two design earthquakes. The first is a smaller earthquake with a higher probability of occurring and the second is a larger earthquake with a much lower probability of occurring. The first is called BSE-1E which stands for Basic Safety Earthquake 1 Existing Buildings and has a recurrence probability of 20% in 50 years. The second is called BSE-2E which stands for Basic Safety Earthquake 2 Existing Buildings and has a recurrence probability of 5% in 50 years. (As a side note, new buildings are designed for the "maximum expected earthquake" which has a recurrence probability of 2% in 50 years and an even larger ground shaking force level. The reason the design force levels are lower for existing buildings is because their remaining service life is deemed less than that for new buildings so the people who came up with the ASCE 41 evaluation methods justified using a lower force level for existing buildings because it is less likely a larger earthquake will occur during their remaining life expectancy. It also makes it easier to justify compliance of older buildings using lower force levels.) Tier 2 focuses on the BSE-1E level ground shaking forces and Tier 3 takes it up to the higher BSE-2E force level.

We found that for the BSE-1E smaller earthquake, we could have justified reinforcing existing structural members as an adequate retrofit to ride out the lower level earthquake. However, using the higher BSE-2E ground shaking forces, all members were greatly over stressed, to the degree that reinforcing them would be impractical. The conclusion is that we need to add new lateral system members to the building to make it strong enough to survive the larger earthquake.

That said, it is still allowed by code to do a partial upgrade to the building. New lateral system members could be installed to support just the 2nd level, but designed for vertical expansion to support the 3rd and roof levels as money becomes available. The building code language for voluntary upgrade is that you can do any incremental amount of work just as long as you don't leave the building in a worse state than it already was. An example of how you could make the

675 East 500 South, Suite 400 – Salt Lake City, Utah 84102 – 801.486.3883 – www.reaveley.com

BNR building worse is if you added new brace frames just on one side of the building which would give it greater stiffness on that side and make the building experience even greater torsional displacement in an earthquake than if nothing were done. Therefore, it would be considered a worse state than it originally was.

This information applies to all three wings of the BNR Building. I know this is not the answer we were hoping for, but hopefully we can now move forward with this information and together, with USU, decide what the best-value approach for this project is.

Please call or email me if you have any questions.

Thank you,

Michael Buehner, SE
Principal
Reaveley Engineers + Associates

BNR Tier 2 Evaluation

Performance Objective:	Basic Safety Objective for Existing Buildings (BPOE)
Performance Level:	Life Safety Building Performance Level
Seismic Hazard Level:	BSE-2E – 5% in 50 yr
	BSE-1E – 20% in 50 yr (only required for Tier 2 Evaluation)

Summary: No complete load path is available for inertial forces on structure. Tier 2 evaluation not allowed. Tier 3 required. Tier 3 evaluation requires the use of a larger seismic hazard level.

Evaluated all elements as force controlled since no codified lateral system is available

Main building elements complied with BSE-1E forces but did not meet BSE-2E forces. Connections failed in both instances.

With BSE-2E, trusses, columns, and connections were inadequate. See picture below.

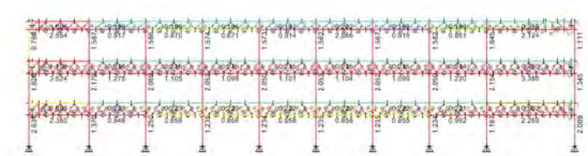

Buildings Trusses (red is noncompliant)

6.4 BNR Upgrade Considerations matrix

This matrix was prepared to assist USU Facilites and Steering Committee to understand the general scope and value of various upgrades to the BNR building. Redlines represent discussion items and results

CRSA PAYETTE

BIOLOGY & NATURAL RESOURCES BUILDING: UPGRADE CONSIDERATIONS

COST SCALE	SITE / CIVIL	STRUCTURAL	MECHANICAL	ELECTRICAL	BUILDING SKIN	FIRE-RATED STAIRS & SHAFTS	RESTROOMS	HALLWAYS & LOBBIES
SMALL 0 - $		**No Structural Upgrade** $0.00 - structural upgrade is not required by code if renovation does not subject the existing structure to more than 10% new structural loading. USU would need to determine the risk to life and property. Voluntary upgrades can be undertaken as outlined below.	PARTIAL UPGRADES TO AIR HANDLER $1.5 M SCOPE MAX.	**Required Updates Only** Update power and lighting room by room as required. May require a panel board replacement depending on how many circuits are in the room/lab. POWER LIGHT			**New Unisex Restrooms** Provide 2 new unisex accessible restrooms on first floor. OTHER FLOORS MIN.	**Basic Update** Add new floor finishes, new accent lighting, and furniture. HOW CONNECTED ARE THEY?
MEDIUM $ to $$	**New Sewer System** Provide a new gravity flow sewer system to closest manhole, eliminate basement sumps/pumps. Result = saves maintenance and electricity cost over life of building. X	**Structural Evaluation** Voluntary ASCE 41 Tier 2 structural evaluation to determine demand-to-capacity ratios and actual structural deficiencies (additional $20,000 fee up front - results in determination of risk to existing structure and a more finely tuned voluntary seismic upgrade approach).	**Wing by Wing Upgrade** Fully upgrade one wing at a time. NORTH PRIORITY WEST	**New Dedicated Telecomm Room** Add new dedicated telcomm room in basement with its own cooling system on emergency power. Create 1 telecomm room centrally located on each floor with new cable trays above corridor ceiling for easy distribution and future flexibility. Replace generator and provide new emergency distribution panels per floor. Newly remodeled spaces can be on full emergency power (as required). Other spaces can be upgraded one at a time as other funding becomes available.	**"LAMINATION" Option** SEISMIC TRIGGER Existing curtain wall system remains in place. Install new thermally-broken aluminum-frame curtain wall system with high-performance glazing over existing skin. Work can be done from outside the building with little interference to activities inside. Structural engineer will need to analyze loading for additional structural upgrades if required. LIMIT EXTERIOR VIEW.		**Replacement** Replace old fixtures and valves.	**Update** Provide new wall finishes, signage, display systems, and add glass to hallway doors.
LARGE $$ to $$$	**New Sewer System Crossing Main Campus Tunnel** If the new gravity flow sewer has to cross the main campus tunnel, it may be more expensive. X	**Advanced Structural Evaluation** ? Perform ASCE 41 Tier 3 structural evaluation - computer model and in-depth analysis to determine building behavior during seismic event (additional $30,000 fee up front - results in possible lower seismic retrofit costs).	**New Central VAV Supply-Air Handling System** Demolish entire building mechanical system. Provide new central VAV supply-air handling system for each wing (100% outside air) with DDC controls. Existing exhaust system to remain in place. Upgrade acid treatment system.	**Wing by Wing Upgrade** Fully upgrade one wing at a time. This can be done either with or without a generator/emergency power upgrade. NORTH WEST	**"REPLACEMENT" Option** Demolish and remove entire curtain wall system and replace with new thermally-broken curtain wall system with high-efficiency glazing, insulating panels and sunshades on south facing facades. OPENS EXTERIOR VIEWS	**Enclose Existing Stairs** Enclose existing stairs (4 total) in 2-hour fire-rated construction. Also includes fire rating of shaft wall supporting structure down to foundations. 3-4 HANDRAIL	**Upgrade Restrooms to Code Compliance** Upgade all restrooms in building to current code standards. L.R.	**Ceiling Replacement** Demolish old ceiling and replace with new (this could be done in conjunction with new data distribution cabling).
X-LARGE $$$ to $$$$		**Complete Structural Upgrade** Full IBC 2015 code-compliant upgrade includes new diagonal steel bracing system and shear walls.	**Complete Mechanical Replacement** Add new exhaust air handling system for each wing with heat recovery system. This option will most-likely require a full seismic upgrade to building if these units (along with the supply air units) are placed on the roof. Upgrade entire perimeter radiator system. Upgrade all plumbing piping and fixtures. Enclose all mechanical shafts in 2-hour fire-rated walls.	**Complete Electrical Replacement** Demolish all power boards, feeders, devices and lighting systems. Provide new panels boards, distribution systems, devices, surge protection, UPS, lighting/controls, emerg. power and distribution systems. Provide new A/V systems. Provide new lightning protection system for entire building. Upgrade building clock system.	**"ENCASEMENT" Option** Existing curtain wall system remains in place. Provide completely new thermally-broken curtain wall system with high-efficiency glazing on its own structural foundation/framing system, installed several feet outside the building envelope.	**New Fire-Rated Stair Towers** Provide 2 new fire-rated stair towers (which may contribute to a new seismic retrofit) to the building. Demolish old stairs and fill floor in to reclaim square footage as useable space. OCC LOAD	**Complete Restroom Replacement** Create 2 new multi-floor, fully code-compliant restroom cores (built adjacent to new stair towers). Demolish and remove old restrooms - reclaim square footage as usable space.	**Elevator Replacement** Provide two new code-compliant elevators within newly-created stair/restroom core. 2 HR SHAFT L.R.

BIOLOGICAL SCIENCES BUILDING | BNR REMODEL / ADDITION WORKSHOP 02

CRSA PAYETTE

Blank Page

6.5 Room Data Sheets for spaces taken out of program:

Room Data Sheets for Future Classrooms in the VSB Building, 7.1.3, 7.1.4, 7.1.5, 7.1.6:
As part of the University classroom discussion the design team was asked by Rober Wagner to prepare diagrams of classrooms which could be backloaded into the VSB Building if spaces were vacated during the design process of the new Biological Sciences Building. The costs for demolition and upgrades to these spaces are not part of the scope of this work.

Room Data Sheets originally in program, but taken out:
Room 3.1 Plant Pest Diagnostic Lab: In this program it is assumed that the existing Plant Pest Diagnostic Lab will remain as-is in its currently location in the BNR building.
Room 5.1.9 Computational Lab: This new space was taken out of the program. The intent is to use some of the vacated space in BNR to accomodate two new computational labs,. Due to budget constraints the costs for updating and remodeling these spaces is not part of this scope of work.

7.1.3 VSB- 55-seat Case Study Classroom

Room Data Sheet Detail

Department: 7.1 Classrooms **Room No:** *NA*
Issue Date: **WORK IN PROGRESS**

Space Information
Room Function:
Adjacencies:
Access:
Room Utilization: *M-F 8am-5pm*
General Notes: *VSB existing rooms 232 & 236*

Special Requirements
Lighting Controls:
Visual Controls:
Acoustic Req:
STC Rating:
Structural Req:
Security:
Shielding:
Vib / Iso Req:
Other Spec Req:

Room Size and Capacity
Proposed Area: *1520*
Total Area: *1518 SF*
Room Quantity: *2*
Assigned Cap: *0*
Unassigned Cap: *55*
Total Cap: *55*

Finishes, Doors and Windows
Floor: *Carpet Tile*
Base: *Rubber*
Walls: *Gypsum Board*
Wall Finish: *Paint - low v.o.c.*
Ceiling: *ACT 2'x2'*
Ceiling Height:

Door Size: *3'-0" single leaf*
Door Type: *Wood*
Door Vis Panel: *Required*
Window Treat: *Light filtering*
Window Skylight: *None*

Casework and Built-ins
Wall Cabinets:
Base Cabinets:
Counter Tops:
Counter (LF):
Counter Height:

Shelving (LF):
Drawer Units:
White Boards: *Yes, as shown*
Tack Boards *No*
Proj. Screen: *Yes*

Communications
 # Phone Outlets:
 # Data Outlets:
Network:
Clocks:
Paging System:
Monitor/Alarm:
Other:

HVAC
Air Changes:
Air Circulation:
Natural Vent:
Pressure:
Temperature:
Rel. Humidity:
Local Exhaust:
Air Filtration:
CO2 Sensor:
Distribution:
Other HVAC:

Electrical
Power:
Features:
Elec. Outlets:
Illumination:
Fixtures:
Fixt. Mounting:
Occ. Sensors:
Dim Switch:
Switching:
Task Light:
Emerg. Power:
UPS Power:

Plumbing
Sinks:
Pure Water:
Hot/Cold Water:
Hose Bib:
Floor Drain:
Waste:
Emer. Eyewash:
Emer. Station:
Gases:
Comp. Air:
Lab Gas:
Vacuum:
CO^2:
Other Gas:
Fire Protection:

Equipment

Type	Count	Status
60" Flat Panel Monitor. Wall mounted	2	4

Furniture

Type	Count	Status
24" Fixed Tables - 15 LF	4	4
24" Fixed Tables - 19 LF	2	4
24"x60" Table	2	4
Lecturn	1	4
Chair	53	4

Status Key: **1** = Furnished and Installed by Contractor (CFCI), **2** = Furnished by Owner, Contractor Installed (OFCI), **3** = Furnished and Installed by Owner (OFOI), **4** = Provided Outside of Project Budget

CRSA PAYETTE

VSB - 55-seat Case Study Classroom 7.1.3

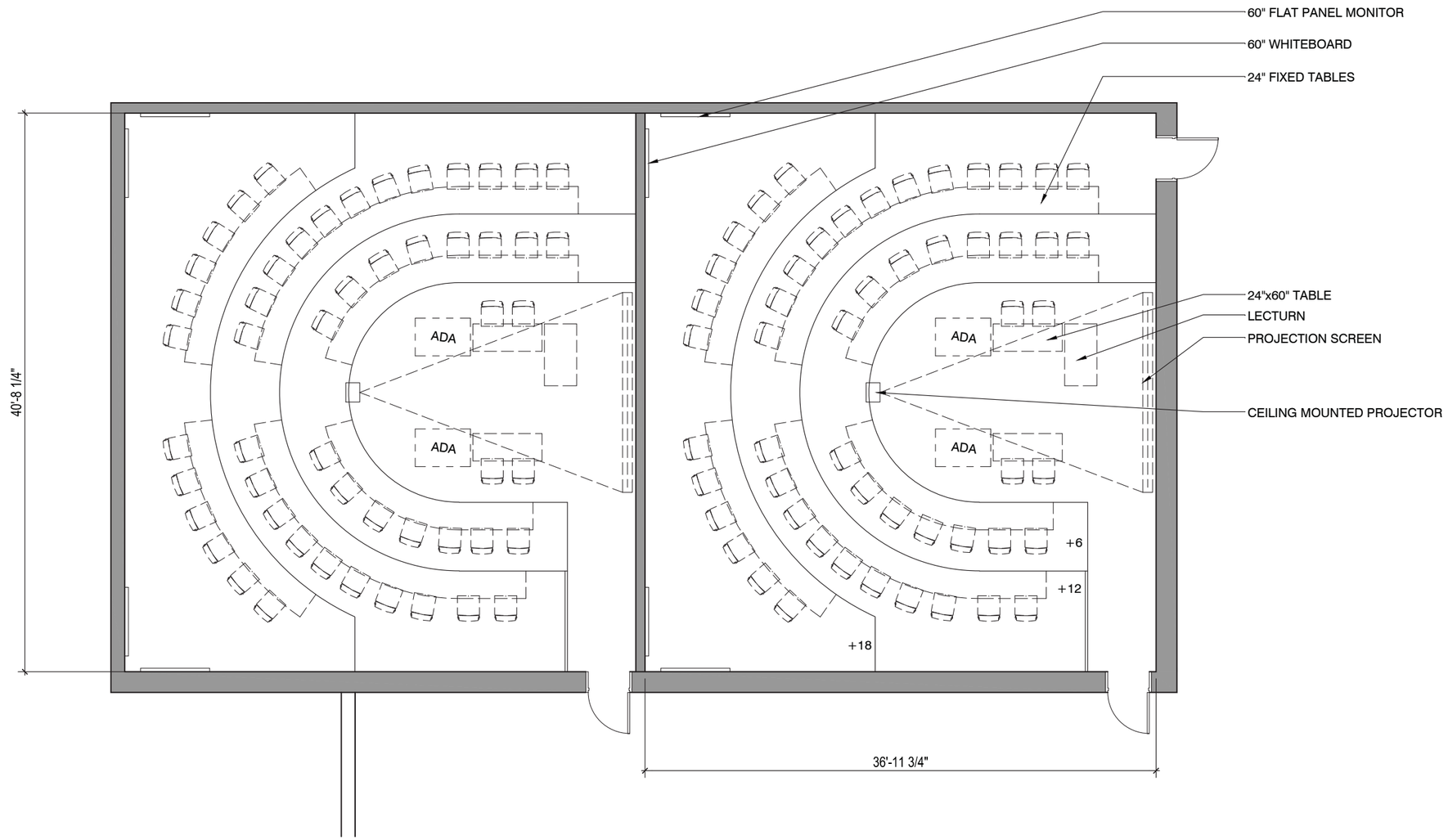

Scale: 1/8" = 1'-0"

7.1.4 VSB- 40-seat Active Learning Classroom

Room Data Sheet Detail

Department: 7.1 Classrooms **Room No:** *NA*
Issue Date: **WORK IN PROGRESS**

Space Information

Room Function:
Adjacencies:
Access:
Room Utilization: *M-F 8am-5pm*
General Notes: *VSB existing rooms 119 & 121*

Special Requirements

Lighting Controls:
Visual Controls:
Acoustic Req:
STC Rating:
Structural Req:
Security:
Shielding:
Vib / Iso Req:
Other Spec Req:

Room Size and Capacity

Proposed Area: *1400*
Total Area: *1400 SF*
Room Quantity: *1*
Assigned Cap: *0*
Unassigned Cap: *40*
Total Cap: *40*

Finishes, Doors and Windows

Floor: *Carpet Tile*
Base: *Rubber*
Walls: *Gypsum Board*
Wall Finish: *Paint - low v.o.c.*
Ceiling: *ACT 2'x2'*
Ceiling Height:

Door Size: *3'-0" single leaf*
Door Type: *Wood*
Door Vis Panel: *Required*
Window Treat: *Light filtering*
Window Skylight: *None*

Casework and Built-ins

Wall Cabinets:
Base Cabinets:
Counter Tops:
Counter (LF):
Counter Height:

Shelving (LF):
Drawer Units:
White Boards: *Yes, as shown*
Tack Boards *No*
Proj. Screen: *Yes*

Communications

 # Phone Outlets:
 # Data Outlets:
Network:
Clocks:
Paging System:
Monitor/Alarm:
Other:

HVAC

Air Changes:
Air Circulation:
Natural Vent:
Pressure:
Temperature:
Rel. Humidity:
Local Exhaust:
Air Filtration:
CO2 Sensor:
Distribution:
Other HVAC:

Electrical

Power:
Features:
Elec. Outlets:
Illumination:
Fixtures:
Fixt. Mounting:
Occ. Sensors:
Dim Switch:
Switching:
Task Light:
Emerg. Power:
UPS Power:

Plumbing

Sinks:
Pure Water:
Hot/Cold Water:
Hose Bib:
Floor Drain:
Waste:
Emer. Eyewash:
Emer. Station:
Gases:
Comp. Air:
Lab Gas:
Vacuum:
CO^2:
Other Gas:
Fire Protection:

Equipment

Type	Count	Status
60" Flat Panel Monitor. Wall mounted	5	4

Furniture

Type	Count	Status
60" Round Table	5	4
Chair	40	4

Status Key: **1** = Furnished and Installed by Contractor (CFCI), **2** = Furnished by Owner, Contractor Installed (OFCI), **3** = Furnished and Installed by Owner (OFOI), **4** = Provided Outside of Project Budget

CRSA PAYETTE

VSB - 40-seat Active Learning Classroom 7.1.4

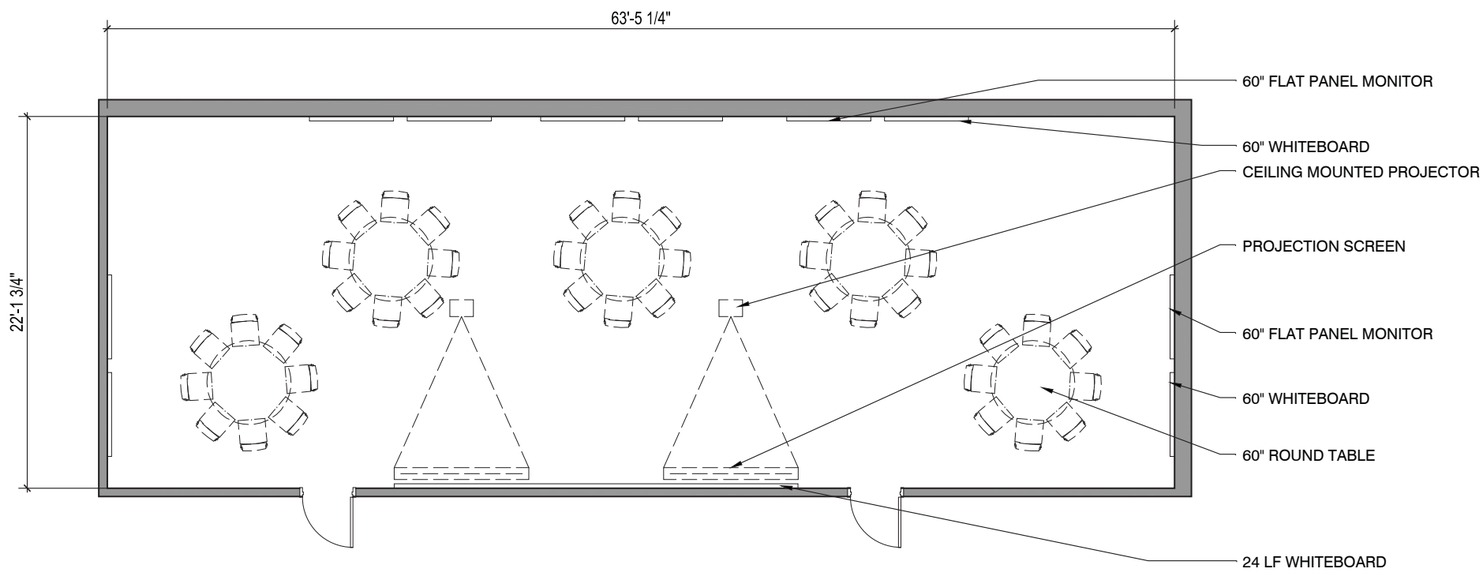

Scale: 1/8" = 1'-0"

7.1.6 VSB- 30-seat Classroom

Room Data Sheet Detail

Department: 7.1 Classrooms
Issue Date: WORK IN PROGRESS
Room No: *NA*

Space Information

Room Function:
Adjacencies:
Access:
Room Utilization: *M-F 8am-5pm*
General Notes: *VSB existing room 219*

Special Requirements

Lighting Controls:
Visual Controls:
Acoustic Req:
STC Rating:
Structural Req:
Security:
Shielding:
Vib / Iso Req:
Other Spec Req:

Room Size and Capacity

Proposed Area: *680*
Total Area: *680 SF*
Room Quantity: *1*
Assigned Cap: *0*
Unassigned Cap: *30*
Total Cap: *30*

Finishes, Doors and Windows

Floor: *Carpet Tile*
Base: *Rubber*
Walls: *Gypsum Board*
Wall Finish: *Paint - low v.o.c.*
Ceiling: *ACT 2'x2'*
Ceiling Height:

Door Size: *3'-0" single leaf*
Door Type: *Wood*
Door Vis Panel: *Required*
Window Treat: *Light filtering*
Window Skylight: *None*

Casework and Built-ins

Wall Cabinets:
Base Cabinets:
Counter Tops:
Counter (LF):
Counter Height:

Shelving (LF):
Drawer Units:
White Boards: *Yes, as shown*
Tack Boards *No*
Proj. Screen: *Yes*

Communications

 # Phone Outlets:
 # Data Outlets:
Network:
Clocks:
Paging System:
Monitor/Alarm:
Other:

HVAC

Air Changes:
Air Circulation:
Natural Vent:
Pressure:
Temperature:
Rel. Humidity:
Local Exhaust:
Air Filtration:
CO2 Sensor:
Distribution:
Other HVAC:

Electrical

Power:
Features:
Elec. Outlets:
Illumination:
Fixtures:
Fixt. Mounting:
Occ. Sensors:
Dim Switch:
Switching:
Task Light:
Emerg. Power:
UPS Power:

Plumbing

Sinks:
Pure Water:
Hot/Cold Water:
Hose Bib:
Floor Drain:
Waste:
Emer. Eyewash:
Emer. Station:
Gases:
Comp. Air:
Lab Gas:
Vacuum:
CO^2:
Other Gas:
Fire Protection:

Equipment

Furniture

Type	Count	Status
22"x60" Table	15	4
Lecturn	1	4
Chair	30	4

Status Key: **1** = Furnished and Installed by Contractor (CFCI), **2** = Furnished by Owner, Contractor Installed (OFCI), **3** = Furnished and Installed by Owner (OFOI), **4** = Provided Outside of Project Budget

CRSA PAYETTE

VSB - 30-seat Classroom 7.1.6

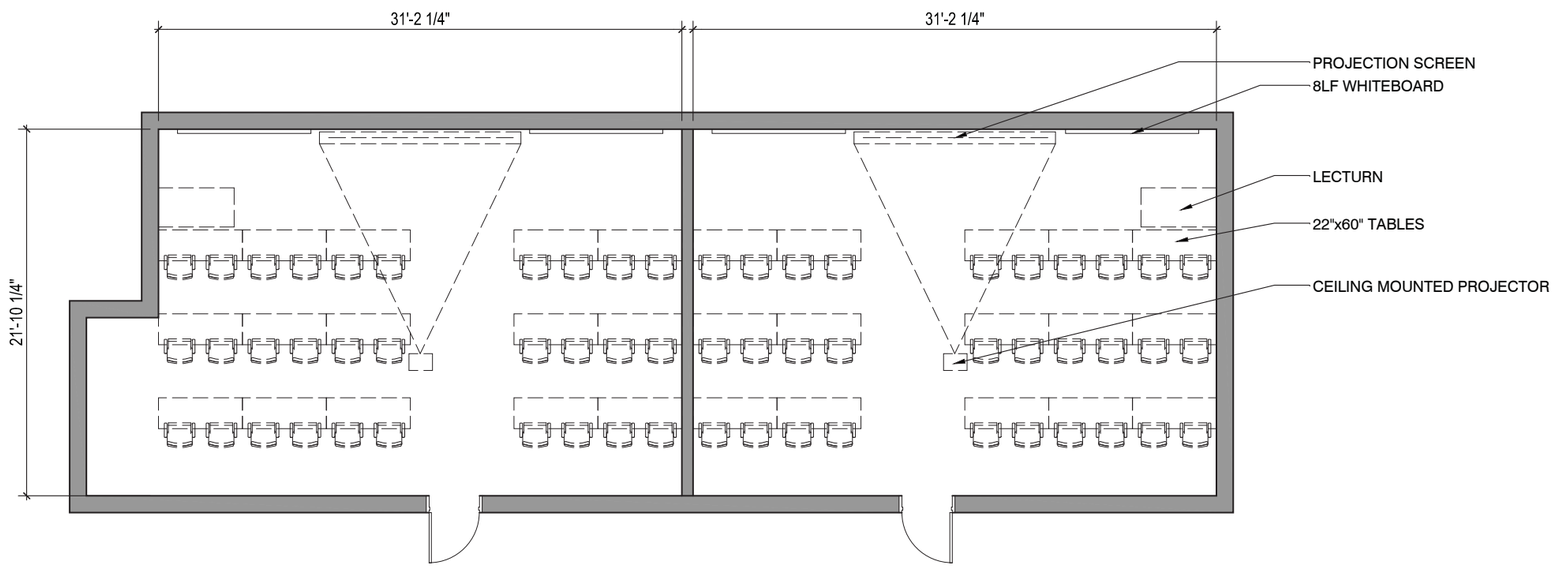

Scale: 1/8" = 1'-0"

7.1.5 VSB- 48-seat Active Learning Classroom

Room Data Sheet Detail

Department: 7.1 Classrooms **Room No:** *NA*
Issue Date: **WORK IN PROGRESS**

VSB - 48-seat Active Learning Classroom 7.1.5

Space Information

Room Function:
Adjacencies:
Access:
Room Utilization: *M-F 8am-5pm*
General Notes: *VSB Existing rooms 122 & 124*

Special Requirements

Lighting Controls:
Visual Controls:
Acoustic Req:
STC Rating:
Structural Req:
Security:
Shielding:
Vib / Iso Req:
Other Spec Req:

Room Size and Capacity

Proposed Area: *1285*
Total Area: *1285 SF*
Room Quantity: *1*
Assigned Cap: *0*
Unassigned Cap: *48*
Total Cap: *48*

Finishes, Doors and Windows

Floor: *Carpet Tile*
Base: *Rubber*
Walls: *Gypsum Board*
Wall Finish: *Paint - low v.o.c.*
Ceiling: *ACT 2'x2'*
Ceiling Height:

Door Size: *3'-0" single leaf*
Door Type: *Wood*
Door Vis Panel: *Required*
Window Treat: *Light filtering*
Window Skylight: *None*

Casework and Built-ins

Wall Cabinets:
Base Cabinets:
Counter Tops:
Counter (LF):
Counter Height:

Shelving (LF):
Drawer Units:
White Boards: *Yes, as shown*
Tack Boards *No*
Proj. Screen: *Yes*

Communications

 # Phone Outlets:
 # Data Outlets:
Network:
Clocks:
Paging System:
Monitor/Alarm:
Other:

HVAC

Air Changes:
Air Circulation:
Natural Vent:
Pressure:
Temperature:
Rel. Humidity:
Local Exhaust:
Air Filtration:
CO2 Sensor:
Distribution:
Other HVAC:

Electrical

Power:
Features:
Elec. Outlets:
Illumination:
Fixtures:
Fixt. Mounting:
Occ. Sensors:
Dim Switch:
Switching:
Task Light:
Emerg. Power:
UPS Power:

Plumbing

Sinks:
Pure Water:
Hot/Cold Water:
Hose Bib:
Floor Drain:
Waste:
Emer. Eyewash:
Emer. Station:
Gases:
Comp. Air:
Lab Gas:
Vacuum:
CO^2:
Other Gas:
Fire Protection:

Equipment

Type	Count	Status
60" Flat Panel Monitor. Wall mounted	6	4

Furniture

Type	Count	Status
60" Round Table	6	4
Lecturn	1	4
Chair	48	4

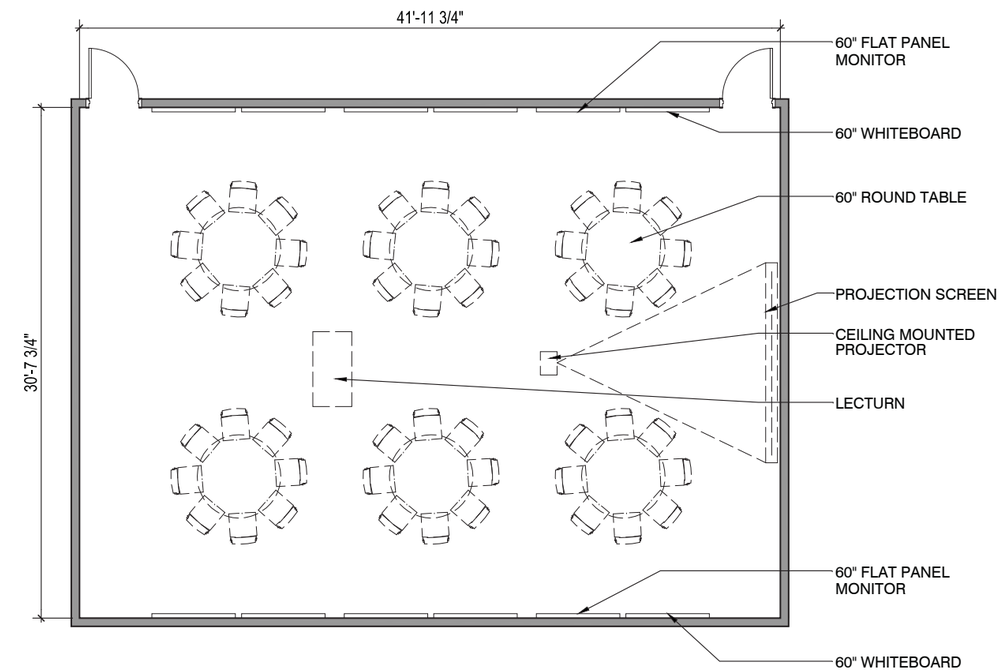

Status Key: **1** = Furnished and Installed by Contractor (CFCI), **2** = Furnished by Owner, Contractor Installed (OFCI), **3** = Furnished and Installed by Owner (OFOI), **4** = Provided Outside of Project Budget

Scale: 1/8" = 1'-0"

CRSA PAYETTE

3.1 Plant Pest Diagnostic Lab Suite

Room Data Sheet Detail

Department: Biology
Issue Date: WORK IN PROGRESS
Room No:

Plant Pest Diagnostic Lab Suite 3.1

Space Information

Room Function: Research lab and staff workstations
Adjacencies: See Adjacency Diagrams
Access: Staff, Faculty
Room Utilization 8:00AM to 5:00PM
General Notes:
Samples brought to reception area from outside entities

Special Requirements

Lighting Controls: See Proj. Standards, Ch. 3
Acoustic Req: See acoustics narrative, Ch. 4
Structural Req: None
Security: Locked
Other Spec Req: None

Room Size and Capacity

Proposed Area: 1100 SF
Total Area: 1102 SF
Room Quantity: 1
Assigned Cap: 3
Unassigned Cap: 11
Total Cap: 14

Finishes, Doors and Windows

Floor: Resilient Tile
Base: Resilient, Cove
Walls: Gyp. Bd.
Wall Finish: Paint
Ceiling: ACT (2'x2')
Ceiling Height: Varies

Door Size: 3'-6" single leaf
Door Type: Wood
Door Vis Panel: Yes
Window Treat: Light-filtering
Window Skylight: None

Casework and Built-ins

Wall Cabinets: Wood
Base Cabinets: Wood
Counter Tops: Epoxy Resin
Counter (LF): See diagram
Counter Height: 36" UON

Shelving (LF): Yes
Drawer Units: Yes
White Boards: None
Tack Boards None
Proj. Screen: None

Communications

See Project Design Standards in Chapter 3 and electrical/telecomm narrative in Chapter 4

HVAC

Air Changes: Research Lab Standard
Air Circulation: Research Lab Standard
Pressure: Negative to corridor
Temperature: Research Lab Standard
Rel. Humidity: Research Lab Standard
Local Exhaust: As noted
Air Filtration: Research Lab Standard
CO2 Sensor: Research Lab Standard
Distribution: Research Lab Standard
Other HVAC:

Electrical

See Project Design Standards in Chapter 3 and electrical/telecomm narrative in Chapter 4

Plumbing

Sinks: Epoxy resin, grey
Pure Water: Only as indicated
Hot/Cold Water: Yes
Hose Bibb: None
Floor Drain: None
Waste: Lab Waste
Emer. Eyewash: None
Emer. Station: None
Gases:
Comp. Air: Yes, as noted
Lab Gas: None
Vacuum: Yes, as noted
CO^2: None
Other Gas:
Fire Protection: Wet Sprinkler

Equipment

Type	Count	Status
6' Laminar Flow Hood	1	2
32"x32" Refrigerator	1	4
Cart	2	4
Computer	11	4
Freezer	1	4
Stacking Incubator	2	4
Undercounter Fridge	1	4

See Appendix, Section 6.2, for existing equipment details

Furniture

Type	Count	Status
18"D Wire Shelving	1	3
18"x30" Table	2	3
24"x36" Table	2	3
24"x48" Table	7	3
36"x72" Table	2	3
File Cabinet	2	3
Guest Chair	2	3
Task Chair	14	3

Status Key: **1** = Furnished and Installed by Contractor (CFCI), **2** = Furnished by Owner, Contractor Installed (OFCI), **3** = Furnished and Installed by Owner (OFOI), **4** = Provided Outside of Project Budget

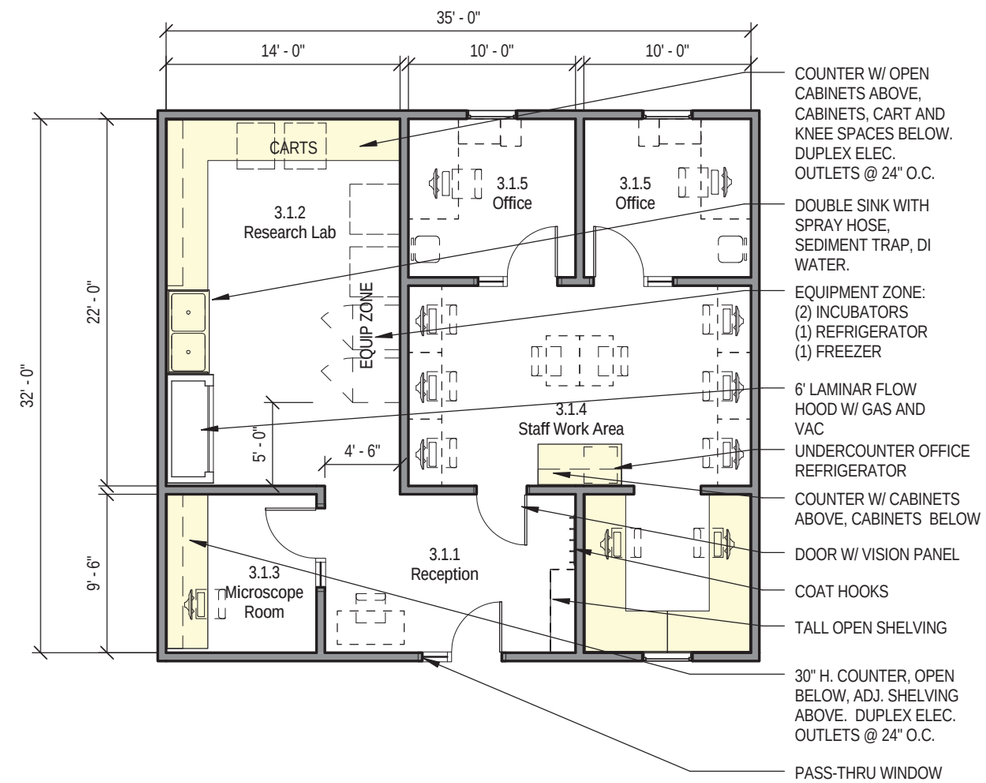

Scale: 1/8" = 1'-0"

CRSA PAYETTE

5.1.9 Computational Lab

Room Data Sheet Detail

Department: Biology
Issue Date: WORK IN PROGRESS
Room No:

Space Information

Room Function: Research support
Adjacencies: See Adjacency Diagrams
Access: Faculty, Students
Room Utilization 24 hrs
General Notes:

Special Requirements

Lighting Controls: See Proj. Standards, Ch. 3
Acoustic Req: See acoustics narrative, Ch. 4
Structural Req: None
Security: Locked
Other Spec Req:

Room Size and Capacity

Proposed Area: 500 SF
Total Area: 500 SF
Room Quantity: 2
Assigned Cap: 0
Unassigned Cap: 13
Total Cap: 13

Finishes, Doors and Windows

Floor: Resilient Tile
Base: Resilient, Cove
Walls: Gyp. Bd.
Wall Finish: Paint
Ceiling: ACT (2'x2') clouds
Ceiling Height: 10'-0" min.

Door Size: 3'-6" single leaf
Door Type: Wood
Door Vis Panel: Yes
Window Treat: Light-filtering
Window Skylight: None

Casework and Built-ins

Wall Cabinets: Wood
Base Cabinets: Wood
Counter Tops: Epoxy Resin
Counter (LF): See diagram
Counter Height: 36" UON

Shelving (LF): Yes
Drawer Units: Yes
White Boards: Yes, as noted
Tack Boards Yes
Proj. Screen: None

Communications

See Project Design Standards in Chapter 3 and electrical/telecomm narrative in Chapter 4

HVAC

Air Changes: Research Lab Standard
Air Circulation: Research Lab Standard
Pressure: Negative to corridor
Temperature: Research Lab Standard
Rel. Humidity: Research Lab Standard
Local Exhaust: As noted
Air Filtration: Research Lab Standard
CO2 Sensor: Research Lab Standard
Distribution: Research Lab Standard
Other HVAC:

Electrical

See Project Design Standards in Chapter 3 and electrical/telecomm narrative in Chapter 4

Plumbing

Sinks: Epoxy resin, grey
Pure Water: Only as indicated
Hot/Cold Water: Yes
Hose Bibb: None
Floor Drain: None
Waste: Lab Waste
Emer. Eyewash: Yes
Emer. Station: Yes
Gases:
Comp. Air: None
Lab Gas: None
Vacuum: None
CO^2: None
Other Gas:
Fire Protection: Wet Sprinkler

Equipment

Type	Count	Status
32"x32" Refrigerator	1	4
Computer	5	4
Freezer	1	4

Furniture

Type	Count	Status
24"x24" Table	1	3
24"x60" Table	4	3
48" Diameter Table	1	3
Chair	4	3
Lab Stool	5	3
Task Chair	4	3

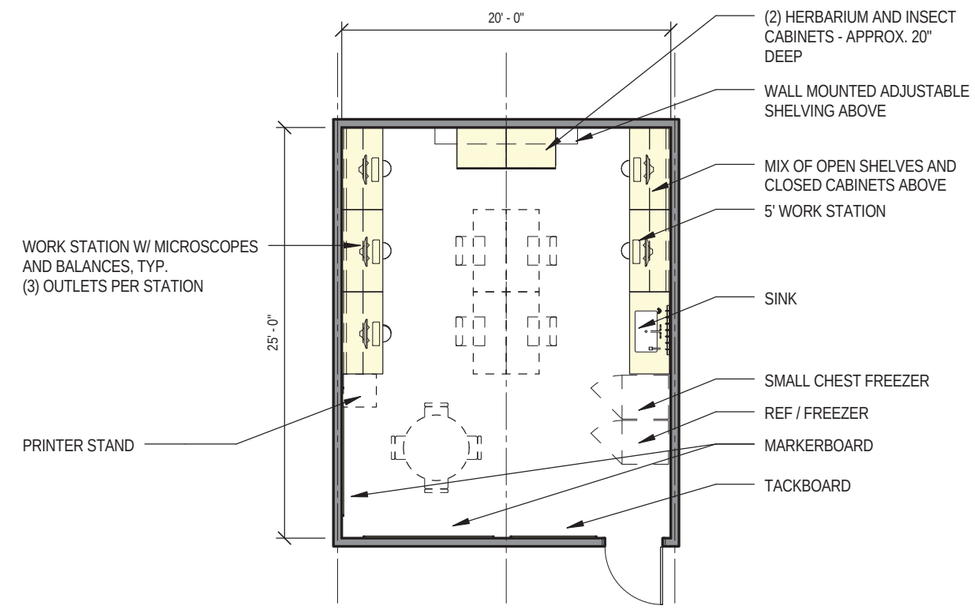

Status Key: **1** = Furnished and Installed by Contractor (CFCI), **2** = Furnished by Owner, Contractor Installed (OFCI), **3** = Furnished and Installed by Owner (OFOI), **4** = Provided Outside of Project Budget

Scale: 1/8" = 1'-0"

CRSA PAYETTE

6.6 Second Opinion Cost Estimate

As part of the final checks and balances of this program a second cost estimator was brought on-board (Parametrix) and provided this estimate. A comparison sheet was prepared between this estimate and a similar estimate done at the same time by Jacobsen Construction

LOGAN, UTAH Page 1

UTAH STATE UNIVERSITY
BIOLOGICAL SCIENCES BUILDING EXPANSION / RENOVATION

MASTER SUMMARY

Program Construction Cost Estimate
February 1, 2016

SECTION			COST/SF	COST
BIOLOGICAL SCIENCES BUILDING	94,055	GSF	358.00	$33,661,000
BIOLOGY / NATURAL RESOURCES BUILDING	54,973	SF	382.00	$21,008,000
TOTAL (Construction)				$54,669,000

NOTES: Costs are for Construction Only.
Costs are Based on an Open Competitive Bid Basis.
Costs are Based on the Following Construction Starts:
Biological Sciences Building - Spring 2017.
Biology / Natural Resources Building - Fall 2018.

Parametrix, Inc. (801) 733-5900

LOGAN, UTAH Page 2

UTAH STATE UNIVERSITY
BIOLOGICAL SCIENCES BUILDING EXPANSION / RENOVATION

BIOLOGICAL SCIENCES BUILDING

S U M M A R Y

Program Construction Cost Estimate
February 1, 2016

SECTION			COST/SF	COST
BIOLOGICAL SCIENCES BUILDING	94,055	GSF	288.00	$27,123,000
SITE IMPROVEMENTS	20,000	SF	45.00	$900,000
SUB - TOTAL (Building & Site)	94,055	GSF	298.00	$28,023,000
CONTRACTOR GENERAL CONDITIONS	10.0%		30.00	$2,802,000
CONTRACTOR OVERHEAD & PROFIT	4.0%		12.00	$1,121,000
CONTRACTOR BOND / INSURANCE	1.5%		4.00	$420,000
SUB - TOTAL (Building & Site)	94,055	GSF	344.00	$32,366,000
DESIGN / CONSTRUCTION CONTINGENCY			Included in Unit Costs	
INFLATION TO CONSTRUCTION START	4.0%		14.00	$1,295,000
TOTAL (Building & Site)	94,055	GSF	358.00	$33,661,000

NOTES: Costs are for Construction Only.
Costs are Based on an Open Competitive Bid Basis.
Costs are Based on a Construction Start of Spring 2017.

Parametrix, Inc. (801) 733-5900

LOGAN, UTAH Page 3

UTAH STATE UNIVERSITY
BIOLOGICAL SCIENCES BUILDING EXPANSION / RENOVATION

BIOLOGICAL SCIENCES BUILDING

NEW BUILDING

Program Construction Cost Estimate
February 1, 2016

SECTION		UNIT	UNIT COST	COST
BIOLOGICAL SCIENCES BUILDING				
Assembly / Classroom Space	12,950	SF	285.00	$3,691,000
Office Space	5,744	SF	220.00	$1,264,000
Teaching Laboratory Space, Wet	21,583	SF	400.00	$8,633,000
Research Laboratory Space, Wet	9,599	SF	400.00	$3,840,000
Laboratory Support Space	3,013	SF	300.00	$904,000
Building Support Space	4,000	SF	275.00	$1,100,000
Circulation Space	12,922	SF	225.00	$2,907,000
Vertical Circulation Space	2,600	SF	300.00	$780,000
Mechanical Space	21,644	SF	185.00	$4,004,000
	94,055	GSF	288.00	$27,123,000

Parametrix, Inc. (801) 733-5900

LOGAN, UTAH Page 4

UTAH STATE UNIVERSITY
BIOLOGICAL SCIENCES BUILDING EXPANSION / RENOVATION

BIOLOGICAL SCIENCES BUILDING

NEW BUILDING

Program Construction Cost Estimate
February 1, 2016

SECTION			UNIT	UNIT COST	COST
SITE IMPROVEMENTS					
Site Improvements		20,000	SF	15.00	$300,000
Tunnel Expansion / Tie-in, Allow		100	LF	250.00	$25,000
Site Mechanical Utilities (Chilled Water / Steam)		1	LS	150,000	$150,000
Site Electrical Utilities		1	LS	75,000	$75,000
Emergency Generator Package		1	LS	300,000	$300,000
Site Lighting		1	LS	50,000	$50,000
		20,000	**SF**	**45.00**	**$900,000**
SUB - TOTAL (Building & Site)		**94,055**	**SF**	**298.00**	**$28,023,000**
CONTRACTOR GENERAL CONDITIONS	**10.0%**			**30.00**	**$2,802,000**
CONTRACTOR OVERHEAD & PROFIT	**4.0%**			**12.00**	**$1,121,000**
CONTRACTOR BOND / INSURANCE	**1.5%**			**4.00**	**$420,000**
SUB - TOTAL (Building & Site)		**94,055**	**SF**	**344.00**	**$32,366,000**
DESIGN / CONSTRUCTION CONTINGENCY				**Included in Unit Costs**	
INFLATION TO CONSTRUCTION START	**4.0%**			**14.00**	**$1,295,000**
TOTAL (Building & Site)		**94,055**	**SF**	**358.00**	**$33,661,000**

NOTES: Costs are for Construction Only.
Costs are Based on an Open Competitive Bid Basis.
Costs are Based on a Construction Start of Spring 2017.

Parametrix, Inc. (801) 733-5900

LOGAN, UTAH Page 5

UTAH STATE UNIVERSITY
BIOLOGICAL SCIENCES BUILDING EXPANSION / RENOVATION

BIOLOGY / NATURAL RESOURCES BUILDING

S U M M A R Y

Program Construction Cost Estimate
February 1, 2016

SECTION				COST/SF	COST
BIOLOGY / NATURAL RESOURCES BUILDING		**54,973**	**SF**	**284.00**	**$15,599,000**
SITE IMPROVEMENTS		**1**	**LS**	**250,000**	**$250,000**
SUB - TOTAL (Building & Site)		**54,973**	**SF**	**288.00**	**$15,849,000**
CONTRACTOR GENERAL CONDITIONS	**10.0%**			**29.00**	**$1,585,000**
CONTRACTOR PHASING PREMIUM	**5.0%**			**14.00**	**$792,000**
CONTRACTOR OVERHEAD & PROFIT	**4.0%**			**12.00**	**$634,000**
CONTRACTOR BOND / INSURANCE	**1.5%**			**4.00**	**$238,000**
SUB - TOTAL (Building & Site)		**54,973**	**SF**	**347.00**	**$19,098,000**
DESIGN / CONSTRUCTION CONTINGENCY				**Included in Unit Costs**	
INFLATION TO CONSTRUCTION START	**10.0%**			**35.00**	**$1,910,000**
TOTAL (Building & Site)		**54,973**	**SF**	**382.00**	**$21,008,000**

NOTES: Costs are for Construction Only.
Costs are Based on an Open Competitive Bid Basis.
Costs are Based on a Construction Start of Fall 2018.

Parametrix, Inc. (801) 733-5900

LOGAN, UTAH Page 6

UTAH STATE UNIVERSITY
BIOLOGICAL SCIENCES BUILDING EXPANSION / RENOVATION

BIOLOGY / NATURAL RESOURCES BUILDING

REMODEL / ADDITION

Program Construction Cost Estimate
February 1, 2016

SECTION		UNIT	UNIT COST	COST
BIOLOGY / NATURAL RESOURCES BUILDING				
Assembly / Classroom Space (Remodeled)	3,659	SF	260.00	$951,000
Lobby Addition (New)	3,636	SF	315.00	$1,145,000
Office Space (Remodeled)	7,575	SF	200.00	$1,515,000
Teaching Laboratory Space, Wet (Remodeled)	5,567	SF	365.00	$2,032,000
Hydrology Laboratory Space, Wet (Remodeled)	1,794	SF	365.00	$655,000
Research Laboratory Space, Wet (Remodeled)	7,602	SF	365.00	$2,775,000
Laboratory Support Space (Remodeled)	3,378	SF	275.00	$929,000
Building Support Space (Remodeled)	1,409	SF	250.00	$352,000
Circulation Space (Remodeled - New Finishes)	9,500	SF	35.00	$333,000
Vertical Circulation Tower (New)	5,200	SF	250.00	$1,300,000
Mechanical Space (Remodeled)	1,600	SF	165.00	$264,000
Mechanical Space (New)	4,053	SF	185.00	$750,000
Structural Upgrades	1	LS	1,200,000	$1,200,000
Exterior Skin Replacement - (60% Metal Panels / 40% Glazing)	21,500	SF	65.00	$1,398,000
	54,973	**SF**	**284.00**	**$15,599,000**

Parametrix, Inc. (801) 733-5900

CRSA PAYETTE

LOGAN, UTAH

Page 7

UTAH STATE UNIVERSITY
BIOLOGICAL SCIENCES BUILDING EXPANSION / RENOVATION

BIOLOGY / NATURAL RESOURCES BUILDING

REMODEL / ADDITION

Program Construction Cost Estimate
February 1, 2016

SECTION			UNIT	UNIT COST	COST
SITE IMPROVEMENTS					
Site Improvements, Minimal		1	LS	50,000	$50,000
Emergency Generator Package		1	LS	200,000	$200,000
		1	**LS**	**250,000**	**$250,000**
SUB - TOTAL (Building & Site)		**54,973**	**SF**	**288.00**	**$15,849,000**
CONTRACTOR GENERAL CONDITIONS	**10.0%**			**29.00**	**$1,585,000**
CONTRACTOR PHASING PREMIUM	**5.0%**			**14.00**	**$792,000**
CONTRACTOR OVERHEAD & PROFIT	**4.0%**			**12.00**	**$634,000**
CONTRACTOR BOND / INSURANCE	**1.5%**			**4.00**	**$238,000**
SUB - TOTAL (Building & Site)		**54,973**	**SF**	**347.00**	**$19,098,000**
DESIGN / CONSTRUCTION CONTINGENCY				**Included in Unit Costs**	
INFLATION TO CONSTRUCTION START	**10.0%**			**35.00**	**$1,910,000**
TOTAL (Building & Site)		**54,973**	**SF**	**382.00**	**$21,008,000**

NOTES: Costs are for Construction Only.
Costs are Based on an Open Competitive Bid Basis.
Costs are Based on a Construction Start of Fall 2018.

Parametrix, Inc. (801) 733-5900

USU Biological Sciences Building / BNR Remodel and Addition

Construction Cost Estimate Comparison - Payette notes
1/29/2016, **Rev 2/2/2016**

	Jacobsen Rev. 1/29/16	Parametrix Rev. 2/1/16	Budget	Difference (Jacobsen)	Difference (Parametrix)
New Building cost	$33,740,300	$33,661,000	$33,750,000	$9,700	$89,000
BNR Remodel/Add.	$22,898,500	$21,008,000	$18,000,000	($4,898,500)	($3,008,000)
Totals	$56,638,800	$54,669,000	$51,750,000	($4,888,800)	($2,919,000)

GSF calculation - new	95,139	94,055
$/gsf	$355	$358
GSF calculation – BNR*	57,841	54,973
$/gsf	$396	$382

*not including unrenovated space remaining in Biology program

Selected comparisons	Jacobsen	Parametrix	Difference
N wing structural upgrade	$2,025,000	$1,200,000	$825,000
N wing exterior skin repl.	$1,436,500	$1,398,000	$38,500
New portion of BNR	$4,281,818	$4,235,000	$46,818

Blank Page

CRSA PAYETTE