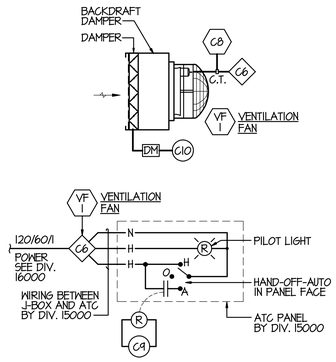

VENTILATION FAN CONTROL DIAGRAMS

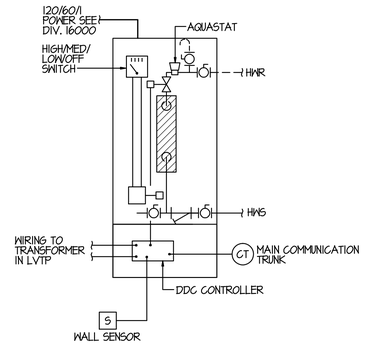

CABINET HEATER CHT-1 CONTROL DIAGRAM

CHT-1 AND 2 SIMILAR

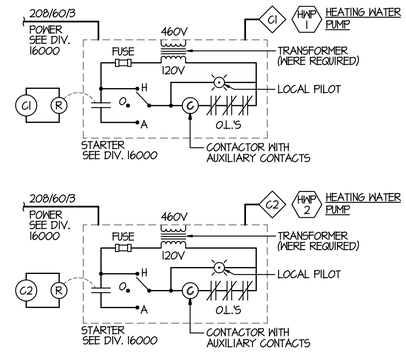

HEATING WATER PUMP CONTROL DIAGRAMS

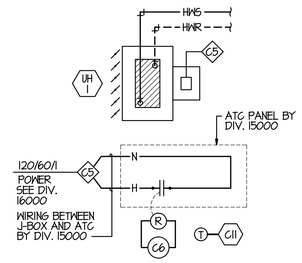

UNIT HEATER CONTROL DIAGRAMS

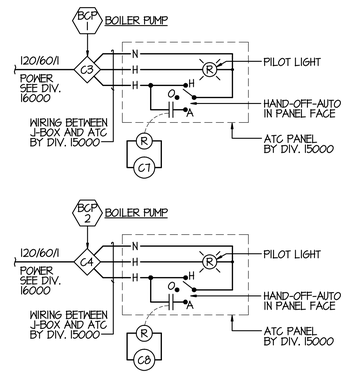

BOILER PUMP CONTROL DIAGRAMS

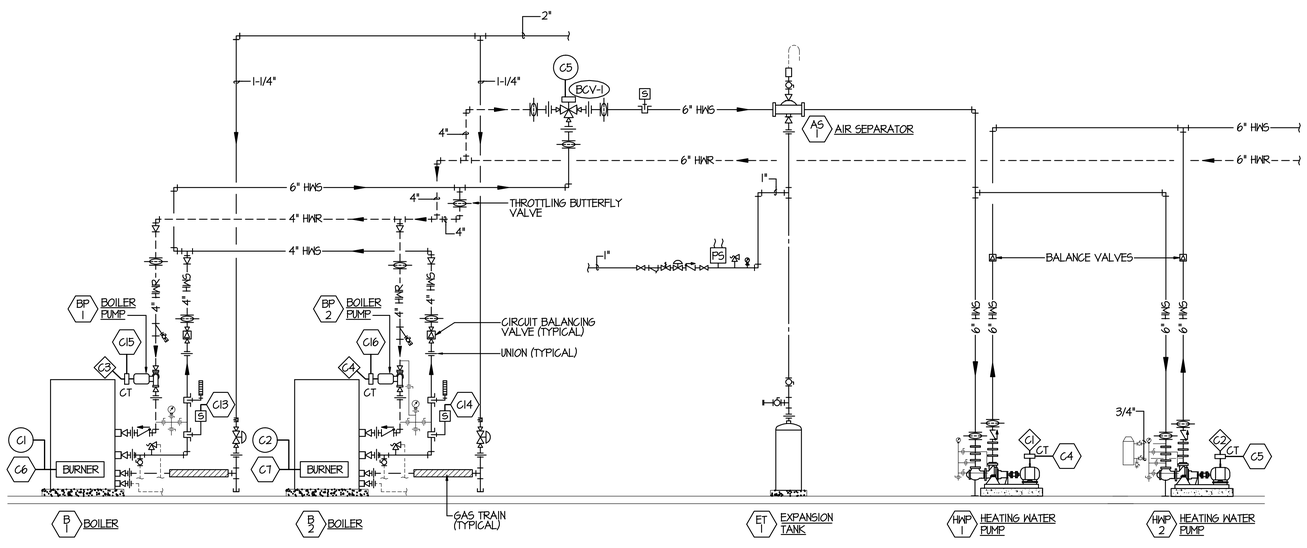

HEATING WATER CONTROL DIAGRAM

SCALE: NONE

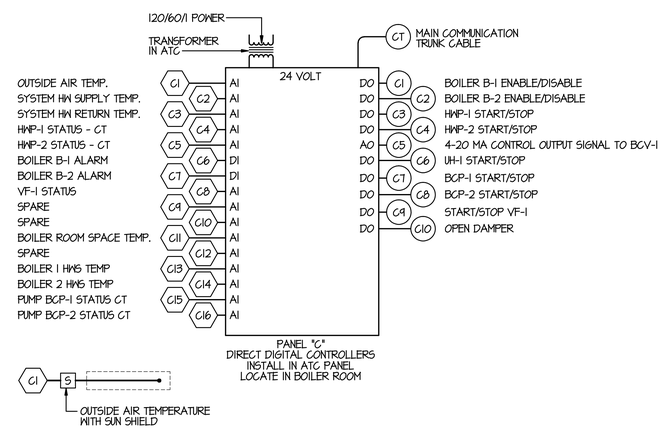

State of Utah
Department of Administrative Services

Division of Facilities Construction & Management

4110 State Office Building
Salt Lake City, Utah 84114
Phone: (801) 538 - 3018
Fax: (801) 538 - 3267

Internet: http://www.dfcm.state.ut.us

Utah National Guard

12953 South Minuteman Drive
Draper, Utah 84020-1726

WPA Architecture

475 North Freedom Blvd.
Provo, Utah, 84601

Tel: (801) 374-0800
Fax: (801) 374-0805

BUILDING NAME:

BILLETING

PROJECT TITLE:

TASS COMPLEX
CAMP WILLIAMS

UTAH NATIONAL GUARD

MARK	DATE	DESCRIPTION

ISSUE TYPE: Final Bid Documents

ISSUE DATE: April 16, 2007

DFCM PROJECT NO: 95059480
CAD PROJECT NO:
CAD DWG FILE:
DRAWN BY: GWM
CHK'D BY: BBG
COPYRIGHT: State of Utah

SHEET TITLE

BAY BILLETING BUILDING
MECHANICAL CONTROLS

LICENSED PROFESSIONAL ENGINEER
No. 154099
B. BRYCE GARDNER
STATE OF UTAH

SHEET NUMBER

MI-6B3

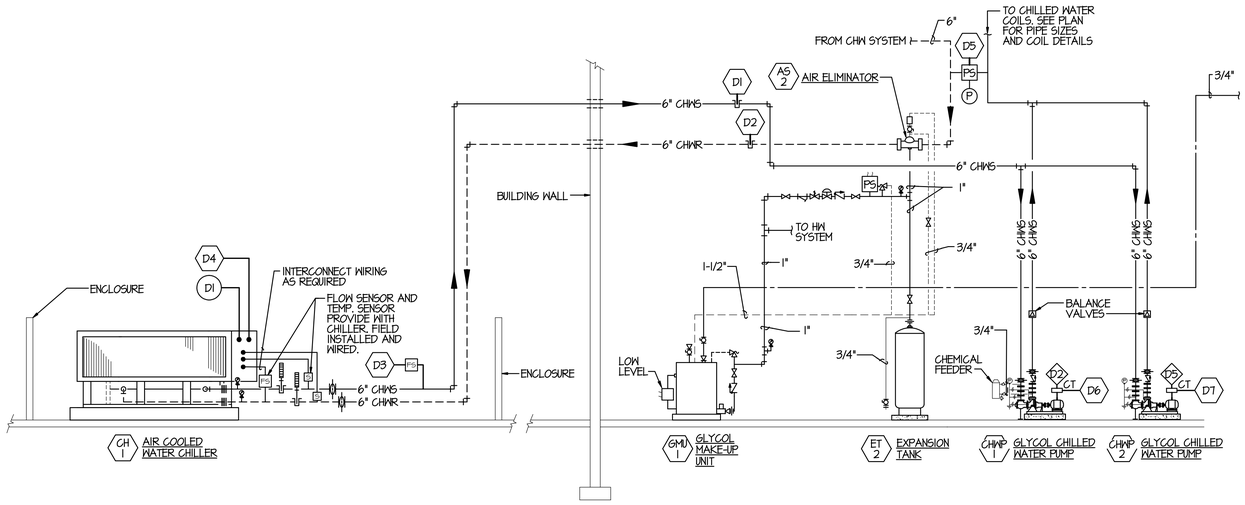

CHILLED WATER CONTROL DIAGRAM

SCALE: NONE

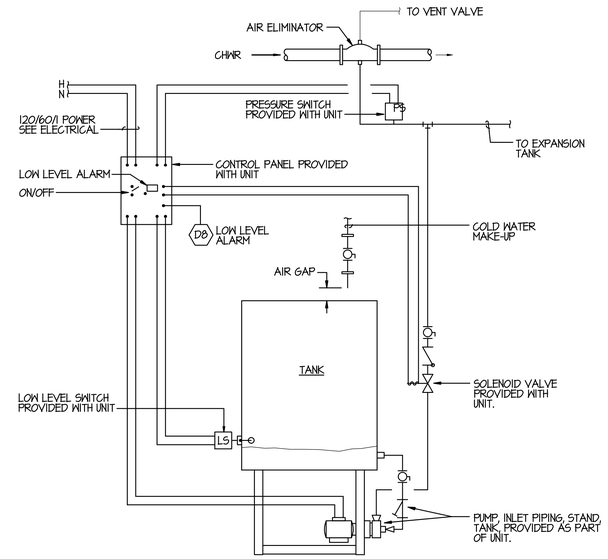

NOTE:
ALL COMPONENTS SHALL BE PROVIDED, INSTALLED, WIRED BY DIV 15000 UNLESS SPECIFICALLY NOTED OTHERWISE. REFER TO ELECTRICAL FOR WIRING AND CONDUIT COVERED THERE.

GLYCOL UNIT AND CONTROL DIAGRAM

SCALE: NONE

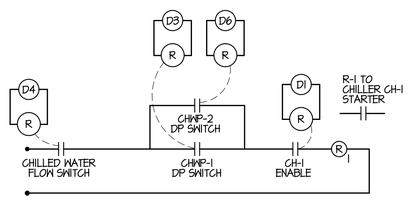

CHILLER CH-1 INTERLOCK CONTROL DIAGRAM

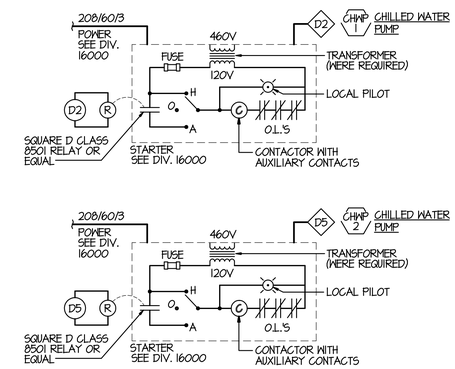

CHILLED WATER PUMPS CONTROL DIAGRAMS

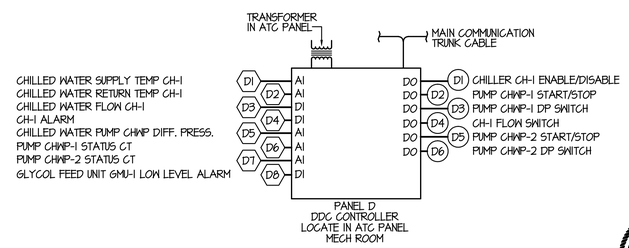

LICENSED PROFESSIONAL ENGINEER
No. 154099
B. BRYCE GARDNER
STATE OF UTAH

State of Utah
Department of Administrative Services

Division of Facilities Construction & Management
4110 State Office Building
Salt Lake City, Utah 84114
Phone: (801) 538 - 3018
Fax: (801) 538 - 3267
Internet: http://www.dfcm.state.ut.us

Utah National Guard
12953 South Minuteman Drive
Draper, Utah 84020-1726

WPA
475 North Freedom Blvd.
Provo, Utah, 84601
Tel: (801) 374-0800
Fax: (801) 374-0805

BUILDING NAME:
BILLETING

PROJECT TITLE:
TASS COMPLEX
CAMP WILLIAMS
UTAH NATIONAL GUARD

MARK	DATE	DESCRIPTION

ISSUE TYPE:
Final Bid Documents

ISSUE DATE:
April 16, 2007

DFCM PROJECT NO: 95059480
CAD PROJECT NO:
CAD DWG FILE:
DRAWN BY: GWM
CHK'D BY: BBG
COPYRIGHT: State of Utah

SHEET TITLE
BAY BILLETING BUILDING MECHANICAL CONTROLS

SHEET NUMBER
MI-6B4

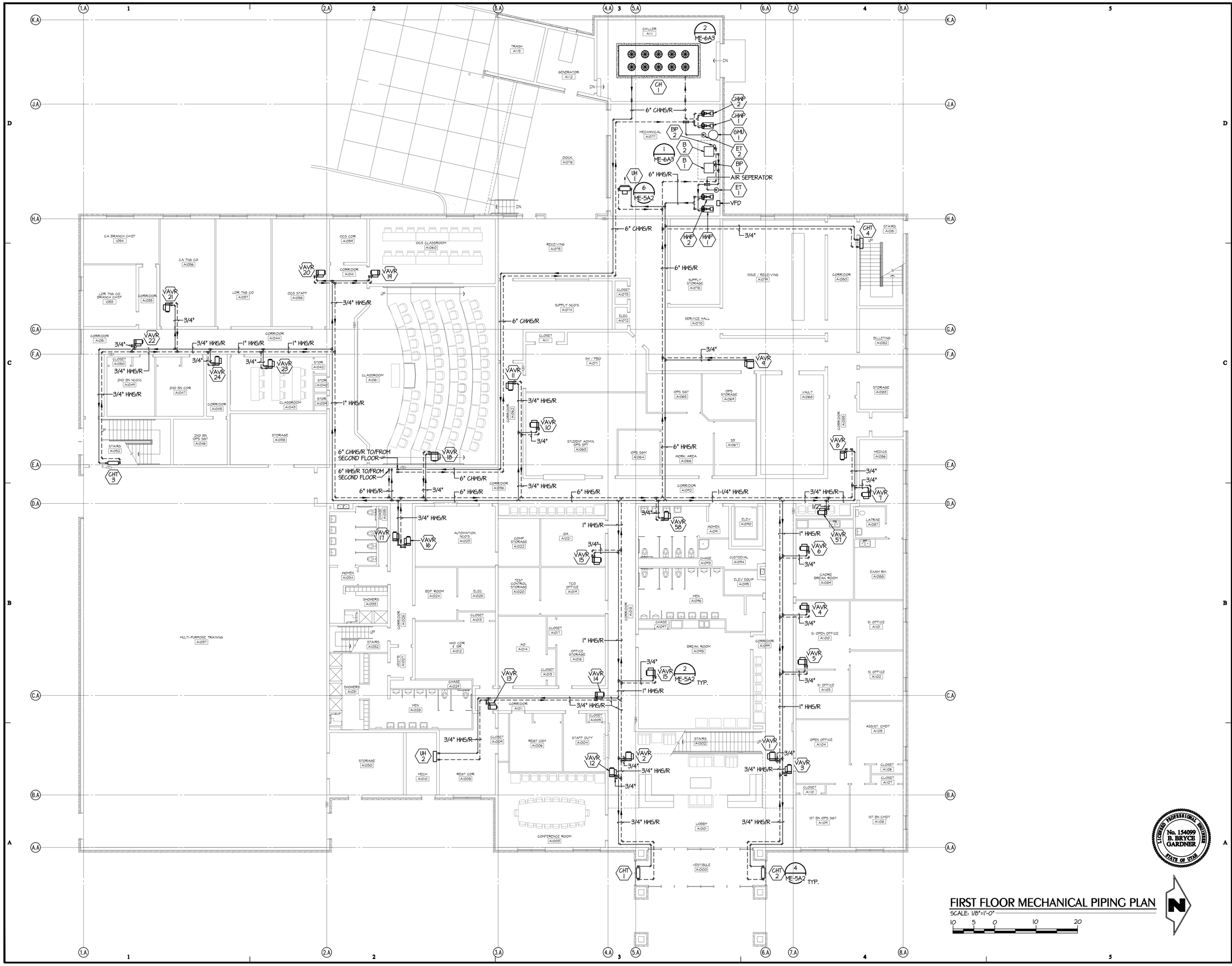

FIRST FLOOR MECHANICAL PIPING PLAN

SCALE: 1/8"=1'-0"

10 5 0 10 20

State of Utah
Department of Administrative Services

DFCM

Division of Facilities Construction & Management

4110 State Office Building
Salt Lake City, Utah 84114
Phone: (801) 538 - 3018
Fax: (801) 538 - 3267

Internet: http://www.dfcm.state.ut.us

Utah National Guard

12953 South Minuteman Drive
Draper, Utah 84020-1726

WPA Architecture

475 North Freedom Blvd.
Provo, Utah, 84601

Tel: (801) 374-0800
Fax: (801) 374-0805

BUILDING NAME:

ADMINISTRATION

PROJECT TITLE:

TASS COMPLEX
CAMP WILLIAMS

UTAH NATIONAL GUARD

MARK	DATE	DESCRIPTION

ISSUE TYPE: Final Bid Documents

ISSUE DATE: April 16, 2007

DFCM PROJECT NO: 95059480
CAD PROJECT NO:
CAD DWG FILE:
DRAWN BY:
CHK'D BY:

COPYRIGHT: State of Utah

SHEET TITLE

ADMINISTRATION AND EDUCATION BUILDING FIRST FLOOR MECH. PIPING PLAN

LICENSED PROFESSIONAL ENGINEER No. 154099 B. BRYCE GARDNER STATE OF UTAH

SHEET NUMBER

MP-1A1

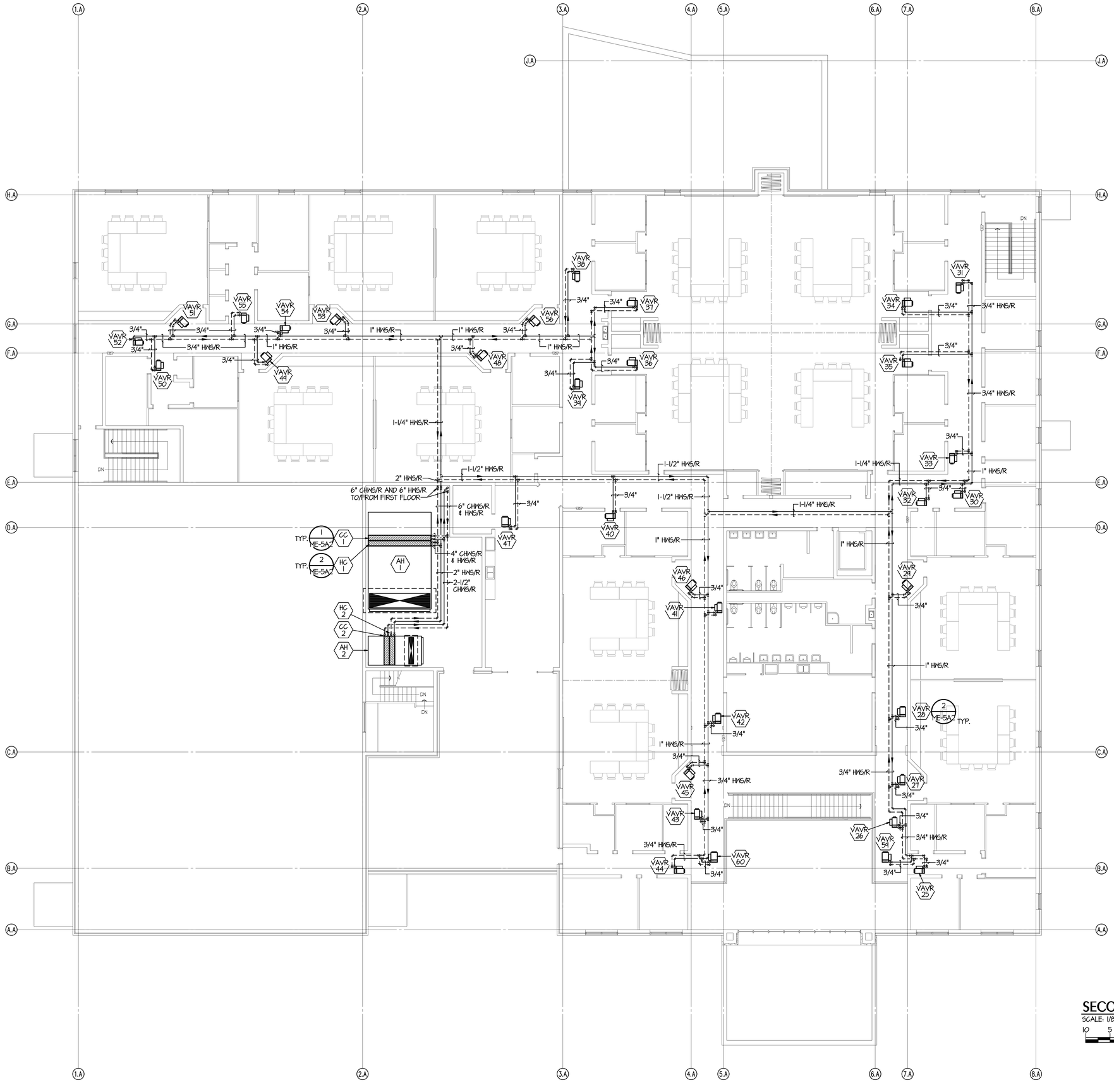

SECOND FLOOR MECHANICAL PIPING PLAN

SCALE: 1/8"=1'-0"

10 5 0 10 20

State of Utah
Department of Administrative Services

DFCM

Division of Facilities
Construction & Management

4110 State Office Building
Salt Lake City, Utah 84114
Phone: (801) 538 - 3018
Fax: (801) 538 - 3267

Internet: http://www.dfcm.state.ut.us

UTAH NATIONAL GUARD

Utah National Guard
12953 South Minuteman Drive
Draper, Utah 84020-1726

WPA

475 North Freedom Blvd.
Provo, Utah, 84601

Tel: (801) 374-0800
Fax: (801) 374-0805

BUILDING NAME:

ADMINISTRATION

PROJECT TITLE:

TASS COMPLEX
CAMP WILLIAMS

UTAH NATIONAL GUARD

MARK	DATE	DESCRIPTION

ISSUE TYPE:
Final Bid Documents

ISSUE DATE:
April 16, 2007

DFCM PROJECT NO: 95059480
CAD PROJECT NO:
CAD DWG FILE:
DRAWN BY:
CHK'D BY:

COPYRIGHT: State of Utah

LICENSED PROFESSIONAL ENGINEER
No. 154099
B. BRYCE GARDNER
STATE OF UTAH

SHEET TITLE

ADMINISTRATION AND
EDUCATION BUILDING
SECOND FLOOR
MECH. PIPING PLAN

SHEET NUMBER

MP-1A2

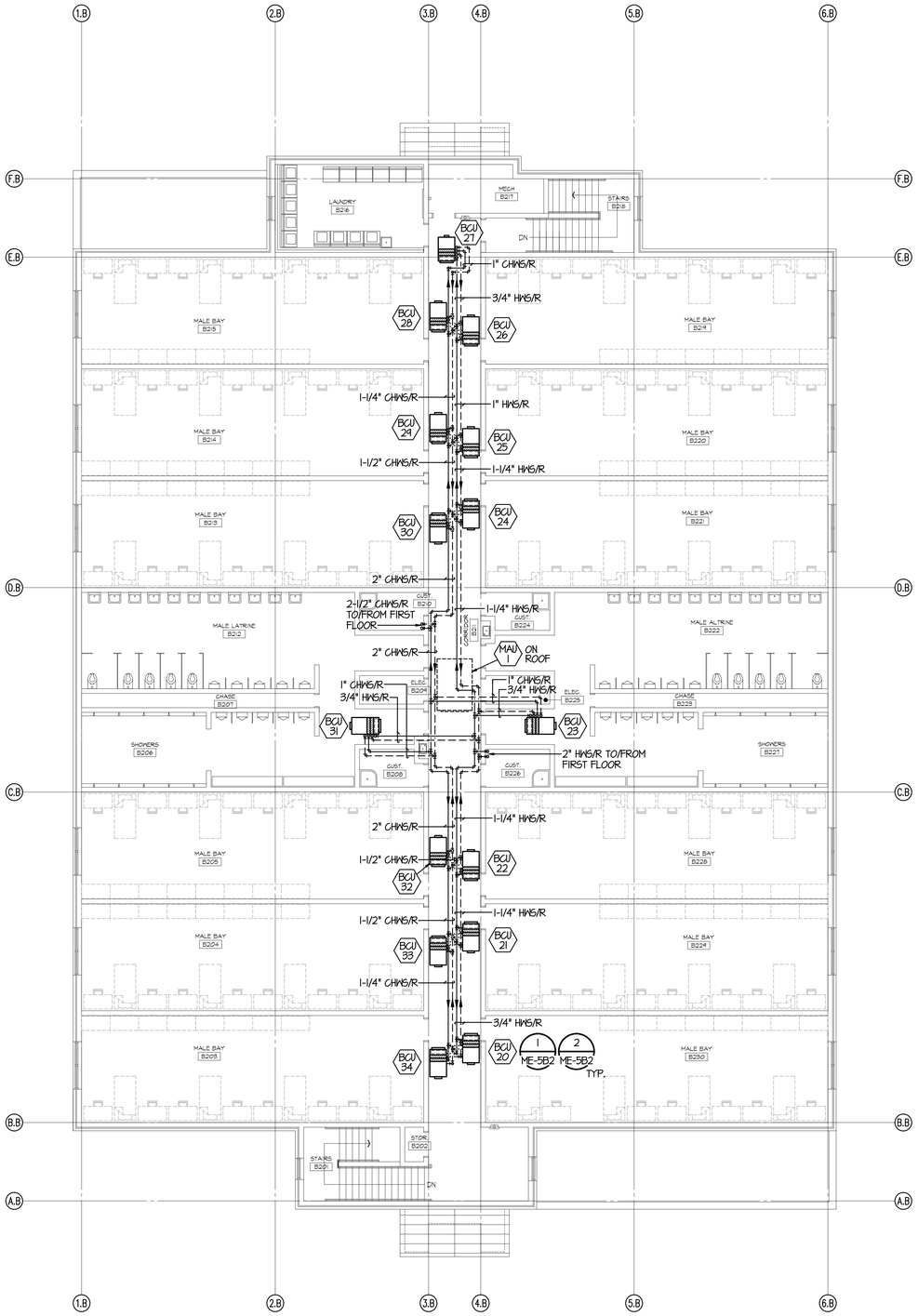

GENERAL NOTE:
1" CHWS/CHWR AND 3/4" HWS/HWR PIPING TO EACH BCU UNIT ON SECOND FLOOR.

SECOND FLOOR MECHANICAL PIPING PLAN

SCALE: 1/8"=1'-0"

10 5 0 10 20

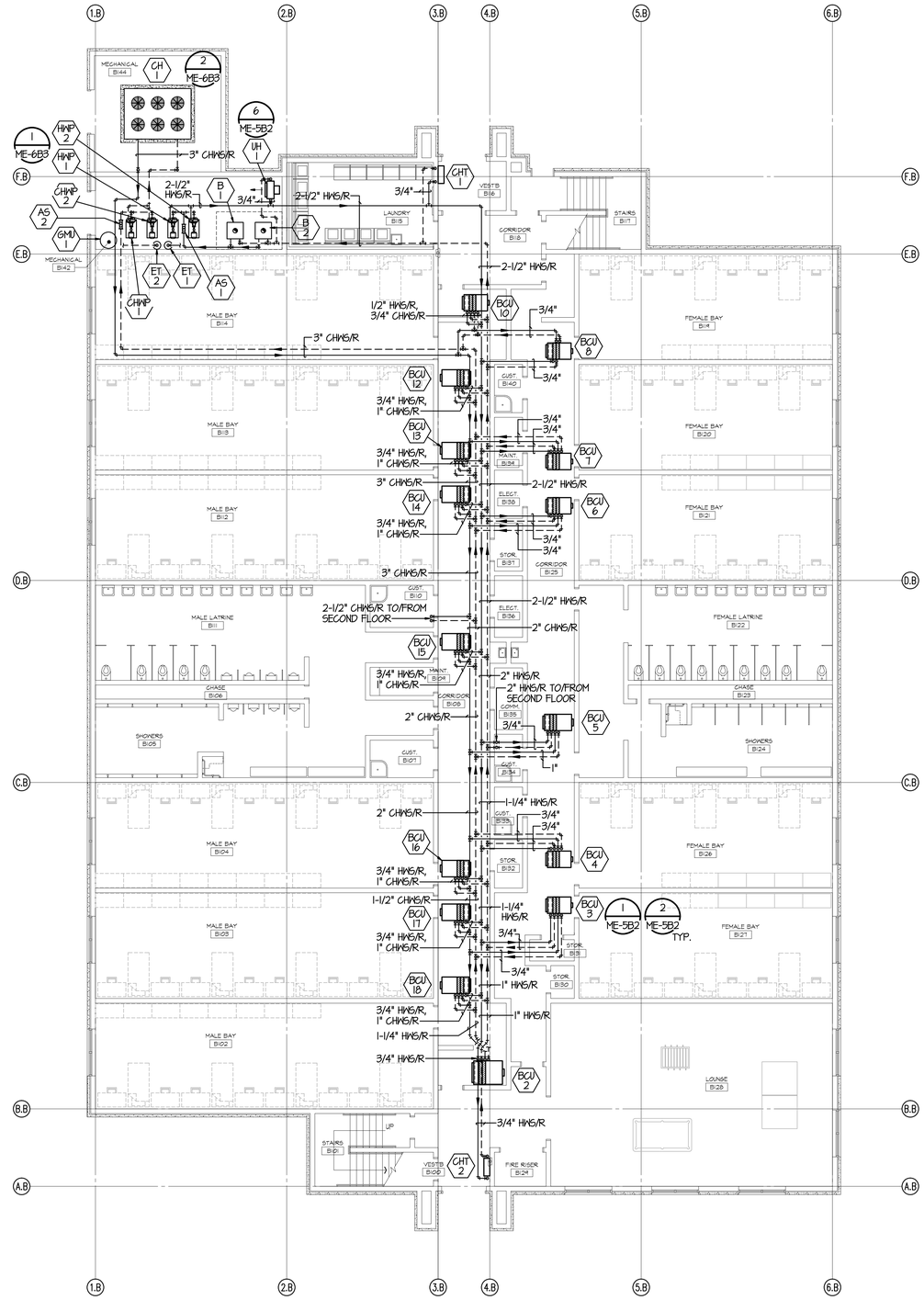

FIRST FLOOR MECHANICAL PIPING PLAN

SCALE: 1/8"=1'-0"

10 5 0 10 20

LICENSED PROFESSIONAL ENGINEER
No. 154099
B. BRYCE GARDNER
STATE OF UTAH

State of Utah
Department of Administrative Services

Division of Facilities Construction & Management

4110 State Office Building
Salt Lake City, Utah 84114
Phone: (801) 538 - 3018
Fax: (801) 538 - 3267

Internet: http://www.dfcm.state.ut.us

Utah National Guard

12953 South Minuteman Drive
Draper, Utah 84020-1726

WPA

475 North Freedom Blvd.
Provo, Utah, 84601

Tel: (801) 374-0800
Fax: (801) 374-0805

BUILDING NAME:

BILLETING

PROJECT TITLE:

TASS COMPLEX
CAMP WILLIAMS

UTAH NATIONAL GUARD

MARK	DATE	DESCRIPTION

ISSUE TYPE:
Final Bid Documents

ISSUE DATE:
April 16, 2007

DFCM PROJECT NO: 95059480
CAD PROJECT NO:
CAD DWG FILE:
DRAWN BY:
CHK'D BY:
COPYRIGHT: State of Utah

SHEET TITLE

BAY BILLETING BUILDING
MECH. PIPING PLANS

SHEET NUMBER

MP-1B1

118 OF 146

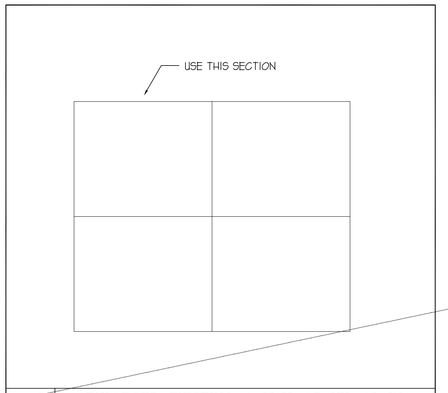

SCALE: N.T.S.

ENLARGED EXISTING 4-WAY, 15 KV, 12470 VOLT, SNC SWITCH

REFERENCE NOTES:

1. REMOVE EXISTING POLES AND FIXTURES.
2. FURNISH AND INSTALL NEW CONCRETE PAD FOR NEW PAD MOUNTED TRANSFORMERS. THE PADS SHALL BE SIZED MINIMUM OF 6" LARGER ON EACH SIDE THAN THE TRANSFORMER PAD FOOT PRINT.
3. UTILIZE EXISTING LOAD BANK SWITCH TO FEED THE NEW 15 KW SWITCH.
4. NEW CONCRETE ENCASED 15 KV FEEDER.
5. FURNISH AND INSTALL NEW PAD MOUNTED 15 KV SWITCH. PROVIDE CONCRETE FOR THE SWITCH.
6. PROVIDE NEW CONCRETE BASES FOR NEW POLE MOUNTED LIGHT FIXTURES.
6. PROVIDE POWER AND CONDUITS TO BDF FOR ELECTRONIC MESSAGE BOARD. PROVIDE SEPARATE CONDUITS FOR POWER AND COMMUNICATIONS UTILIZE 1" CONDUIT FOR EACH. RUN 2 DATA CABLES TO THE BDF.

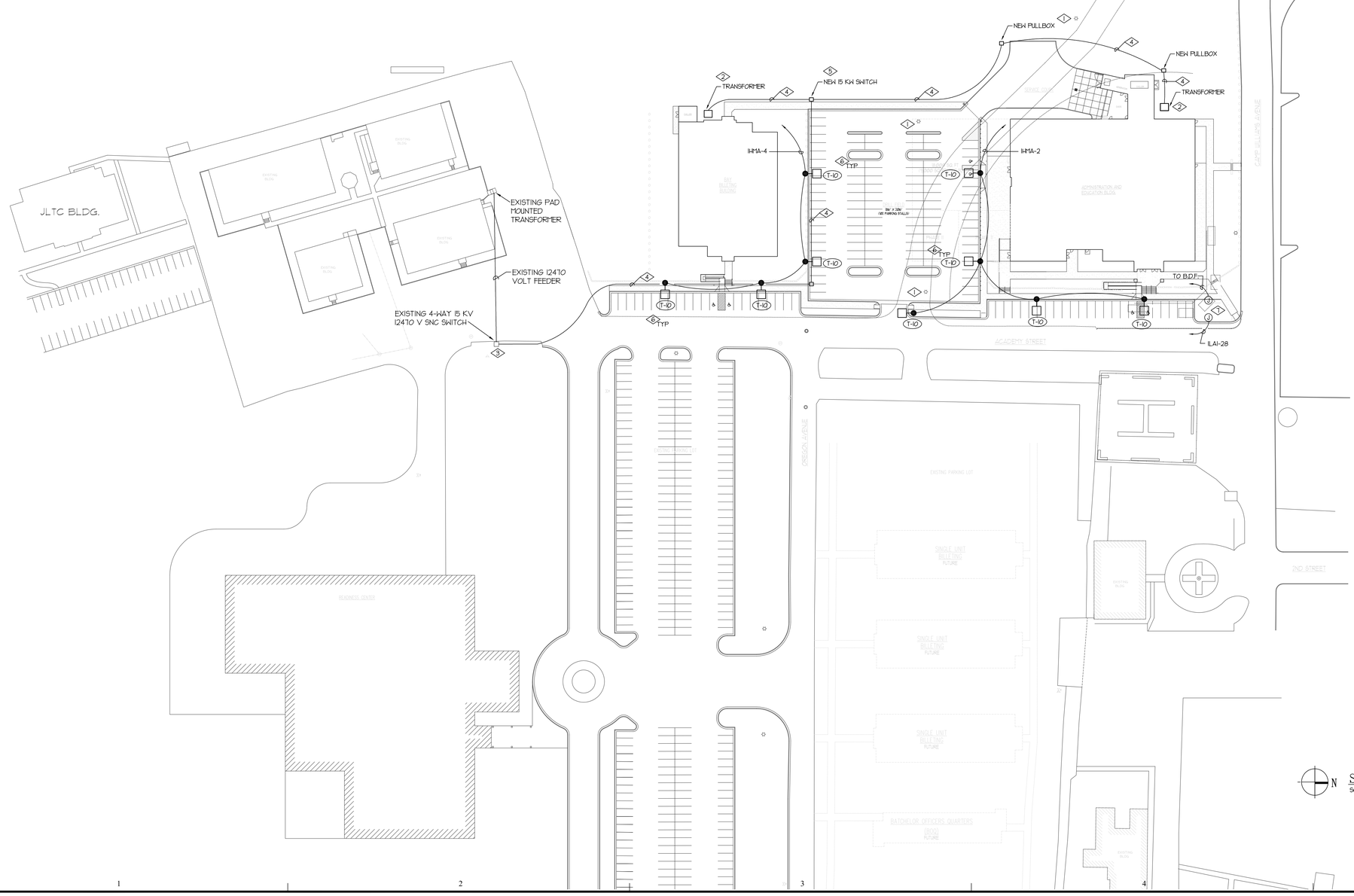

N SITE PLAN – ELECTRICAL
SCALE: 1" = 50'

State of Utah
Department of Administrative Services

Division of Facilities Construction & Management
4110 State Office Building
Salt Lake City, Utah 84114
Phone: (801) 538 - 3018
Fax: (801) 538 - 3267
Internet: http://www.dfcm.state.ut.us

Utah National Guard
12953 South Minuteman Drive
Draper, Utah 84020-1726

E.C.E. INC., CONSULTING ENGINEERS
939 SO. WEST TEMPLE
SALT LAKE CITY, UTAH 84101
(801) 521-8007

BUILDING NAME:
ADMINISTRATION AND BILLETING

PROJECT TITLE:
TASS COMPLEX CAMP WILLIAMS
UTAH NATIONAL GUARD

MARK	DATE	DESCRIPTION
.		

ISSUE TYPE: Final Bid Documents

ISSUE DATE: April 16, 2007

DFCM PROJECT NO: 95059480
CAD PROJECT NO: 2950
CAD DWG FILE:
DRAWN BY:
CHK'D BY: .
COPYRIGHT: State of Utah

SHEET TITLE
SITE PLAN ELECTRICAL
.

SHEET NUMBER
ES-101

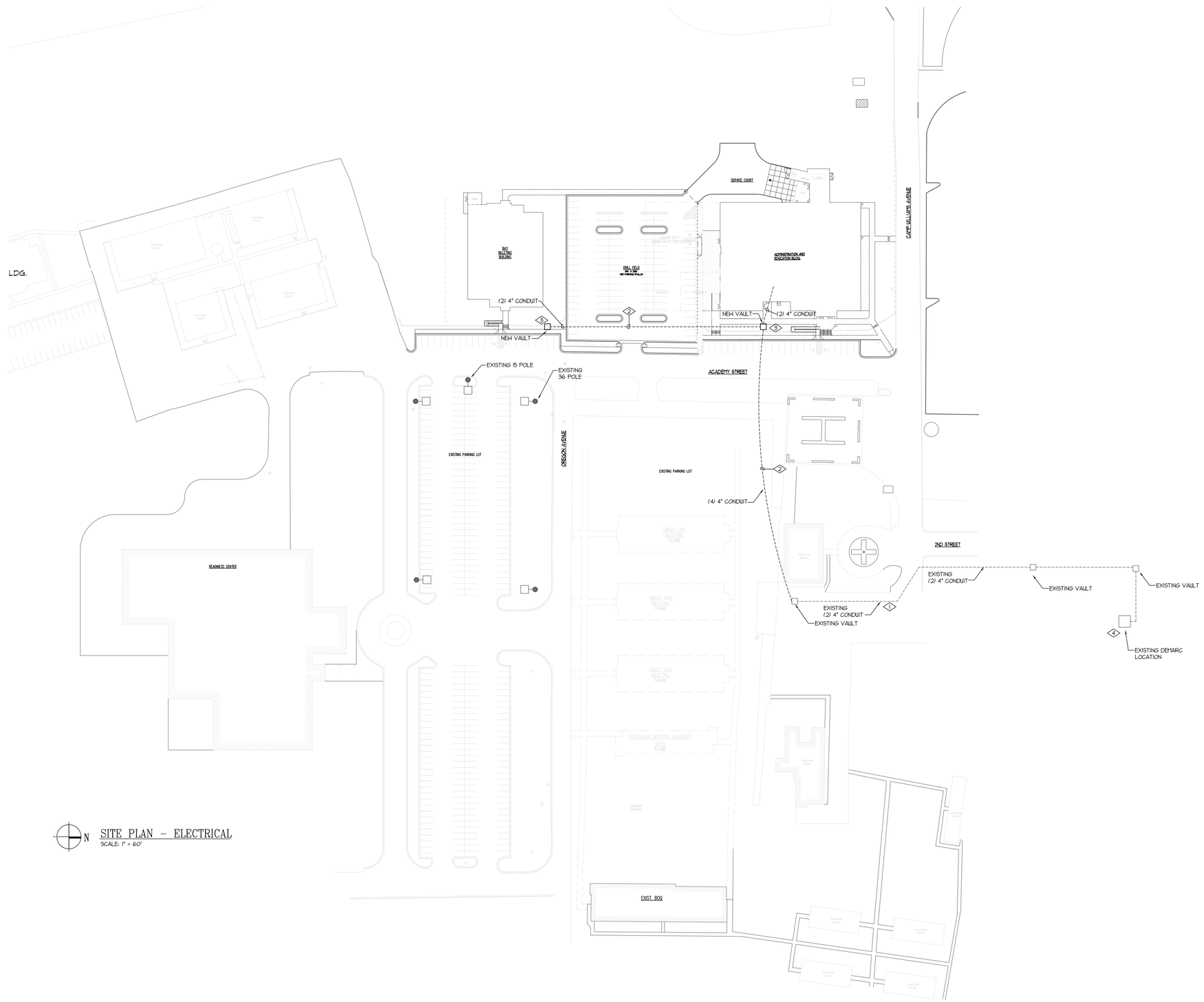

N

SITE PLAN – ELECTRICAL

SCALE: 1" = 60'

REFERENCE NOTES:

1. UTILIZE EXISTING CONDUIT TO RUN NEW COPPER AND FIBER TO NEW ADMINISTRATION BUILDING AND NEW BALLETING BUILDING.
2. FURNISH AND INSTALL NEW CONCRETE ENCASED DUCT FOR NEW COMMUNICATION SYSTEMS AS SHOWN.
3. FURNISH AND INSTALL NEW CONCRETE VAULTS/PULL BOXES FOR NEW COMMUNICATION SYSTEMS.
4. ALL NEW FIBER AND COPPER SHALL INITIATE FROM EXISTING DEMARC LOCATION.

State of Utah
Department of Administrative Services

Division of Facilities
Construction & Management

4110 State Office Building
Salt Lake City, Utah 84114
Phone: (801) 538 - 3018
Fax: (801) 538 - 3267

Internet: http://www.dfcm.state.ut.us

Utah National Guard

12953 South Minuteman Drive
Draper, Utah 84020-1726

E.C.E. INC., CONSULTING ENGINEERS
939 SO. WEST TEMPLE
SALT LAKE CITY, UTAH 84101
(801) 521-8007

BUILDING NAME:

ADMINISTRATION AND BILLETING

PROJECT TITLE:

TASS COMPLEX
CAMP WILLIAMS

UTAH NATIONAL GUARD

MARK	DATE	DESCRIPTION
.		

ISSUE TYPE:
Final Bid Documents

ISSUE DATE:
April 16, 2007

DFCM PROJECT NO: 95059480
CAD PROJECT NO: 2950
CAD DWG FILE:
DRAWN BY:
CHK'D BY: .
COPYRIGHT: State of Utah

SHEET TITLE

SITE PLAN
ELECTRICAL
.

SHEET NUMBER

ES-102

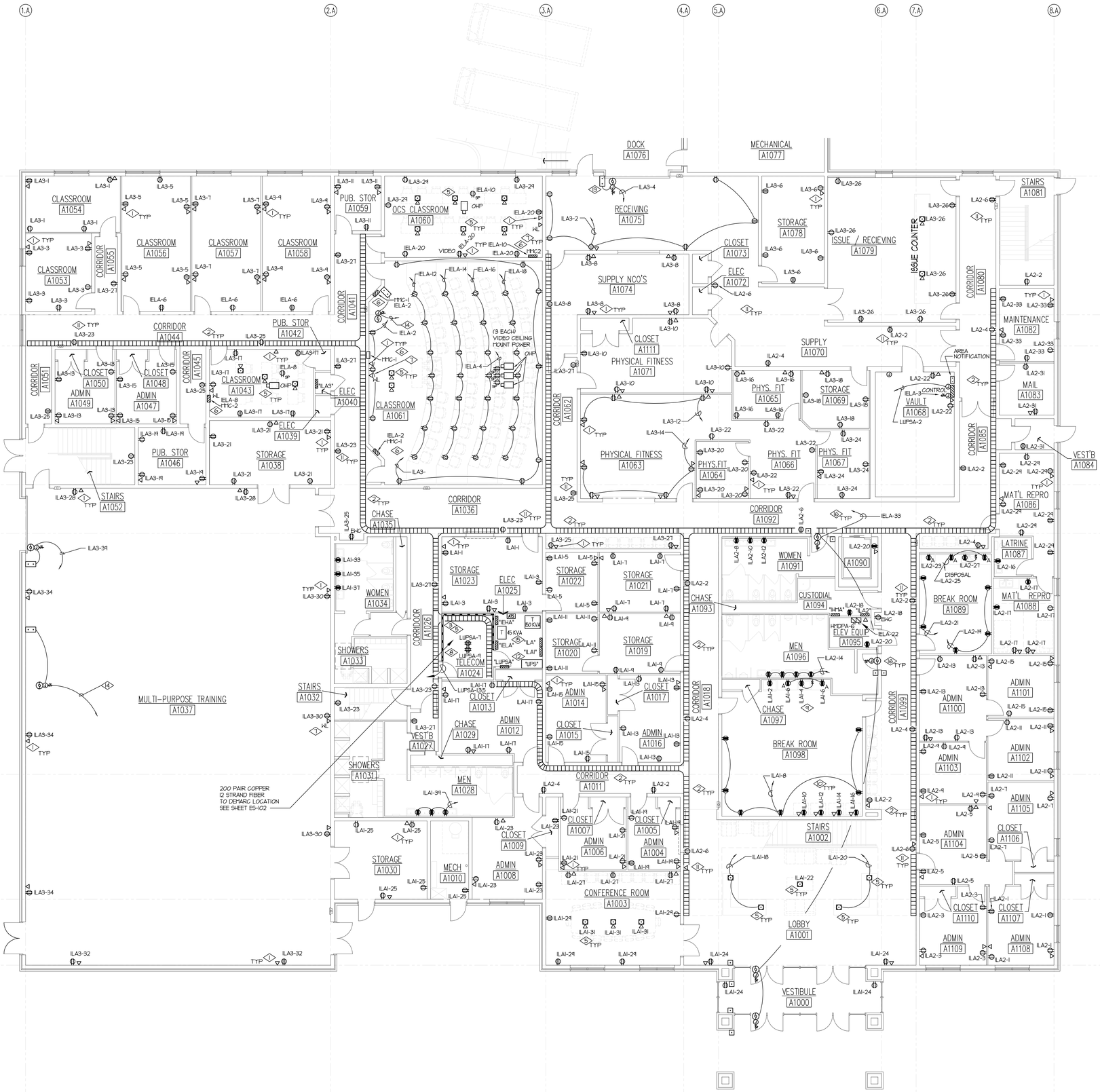

N

FIRST FLOOR PLAN – ELECTRICAL

SCALE: 1/8" = 1'-0"

REFERENCE NOTES:

1. FURNISH AND INSTALL NEW COM/DATA OUTLETS IN THE APPROXIMATE LOCATION AS SHOWN. RUN CABLE (NUMBERS AS INDICATED) FROM COM/DATA OUTLETS THROUGH J-BOXES, POWER POLES, CONDUIT AND CABLE TRAY TO THE IDF ROOM ON SAME FLOOR. PROVIDE A MINIMUM OF (2) COM/DATA CABLES AT EACH LOCATION. PROVIDE 4-11/16", 2 1/8" J-BOX WITH MUDRING. RUN A MINIMUM OF 1" CONDUIT FROM EACH J-BOX TO THE CABLE TRAY.
2. FURNISH AND INSTALL NEW CABLE TRAYS IN THE CEILING AREA IN THE APPROXIMATE LOCATIONS SHOWN. THIS WORK MUST BE COORDINATED VERY CLOSELY WITH MECHANICAL DUCT WORK. PROVIDE ALL ELBOWS, OFFSETS, ETC. AS REQUIRED FOR A COMPLETE INSTALLATION. SECURE CABLE TRAYS EVERY 10' ON CENTER. LATERALLY BRACE CABLE TRAY EVERY 20' AND AT EACH END (WHEN MAKING TRANSITION OR TURNS. GROUND EVERY SECTION OF THE CABLE TRAY.
3. FURNISH AND INSTALL 3/4" X 4' X 8' PLYWOOD ON ALL WALLS OF EACH COM/DATA ROOM. PROVIDE PLYWOOD WITH A DOUBLE COAT OF FIRE RETARDENT PAINT.
4. FURNISH AND INSTALL A GROUNDING BUSBAR ON THE WALL IN EACH COM/DATA ROOM. TIE THE BUSBAR TO THE MAIN GROUNDING RODS/WELLS.
5. FURNISH AND INSTALL FLOOR OUTLETS (WALKER #RC4-XXX FLUSH FLOOR POKE THROUGH) IN THE APPROXIMATE LOCATIONS AS SHOWN. THE OUTLETS SHALL HAVE A MINIMUM OF FOUR (4) DATA PORTS AND TWO (2) DUPLEX OUTLETS. RUN (4) COM/DATA CABLES FROM FLOOR OUTLET TO THE IDF ROOM ON SAME FLOOR. UTILIZE A 1" CONDUIT TO THE CABLE TRAY.
6. REFER TO SHEET EE-6A6 FOR MORE INFORMATION.
7. FURNISH AND INSTALL COM/DATA OUTLET FOR WIRELESS SYSTEM ABOVE THE CEILING. PROVIDE COM/DATA CABLES AT EACH LOCATION AS INDICATED IN NOTE 1.
8. FURNISH AND INSTALL PLUG MOLD ON THE WALLS IN EACH COM'I ROOM AND IN THE LOCATIONS AS SHOWN. USE NONMETALLIC MULTI-OUTLETS. ALTERNATE THE CIRCUITS BETWEEN THE OUTLETS.
9. FURNISH AND INSTALL A DUPLEX OUTLET UNDER THE SINK FOR DISPOSAL. PROVIDE 120 VOLT POWER THRU A SWITCH TO BE INSTALLED ABOVE THE COUNTER TOP TO OPERATE THE DISPOSAL.
10. UTILIZE #10 AWG FOR ALL VENDING MACHINE OUTLETS.
11. IN THE CORRIDORS PROVIDE 3 CIRCUITS AND ALTERNATE BETWEEN OUTLETS. UTILIZE 4 #10 AWG. CARRY ALL CONDUCTORS TO THE LAST DEVICE.
12. FURNISH AND INSTALL A 20 KVA, 16 KW UPS, 208 VOLT INPUT, 120/208 VOLT OUTPUT, 15 MINUTE BATTERY TIME, COMPLETE WITH EXTERNAL MAINTENANCE BYPASS, IN THE APPROXIMATE LOCATION AS SHOWN.
13. PROVIDE 120 VOLTS POWER TO THE DOOR OPERATOR. INSTALL OVERHEAD DOOR SWITCH IN THE APPROXIMATE LOCATION AS SHOWN. TIE PER MANUFACTURER RECOMMENDATIONS.
14. TIE THE MOTORIZED PROJECTION SCREEN OPERATOR TO THE NEAREST 120 VOLT OUTLET. INSTALL CONTROLLER ON THE WALL, TIE THE CONTROLLER TO THE MOTORIZED PROJECTION SCREEN OPERATOR PER MANUFACTURER RECOMMENDATIONS. PROVIDE CONDUIT, CONDUCTORS, J-BOX, ETC. FOR A COMPLETE INSTALLATION. EXACT LOCATION OF DEVICES TO BE COORDINATED WITH ARCHITECT.
15. WALL MOUNT THE 45KVA TRANSFORMER.
16. PROVIDE 120 V EMERGENCY POWER TO ASSISTED DOOR OPERATORS. INSTALL DOOR OPERATORS ON EACH SIDE OF EACH DOOR. TIE THE DOOR OPERATORS TO THE DOOR CONTROLLER PER MANUFACTURERS RECONNECTION. PROVIDE CONDUIT, CONDUCTORS, J-BOX ETC. FOR A COMPLETE INSTALLATION.

State of Utah
Department of Administrative Services

Division of Facilities Construction & Management
4110 State Office Building
Salt Lake City, Utah 84114
Phone: (801) 538 - 3018
Fax: (801) 538 - 3267
Internet: http://www.dfcm.state.ut.us

Utah National Guard
12953 South Minuteman Drive
Draper, Utah 84020-1726

E.C.E. INC., CONSULTING ENGINEERS
939 SO. WEST TEMPLE
SALT LAKE CITY, UTAH 84101
(801) 521-8007

BUILDING NAME:
ADMINISTRATION

PROJECT TITLE:
TASS COMPLEX
CAMP WILLIAMS
UTAH NATIONAL GUARD

MARK	DATE	DESCRIPTION

ISSUE TYPE:
Final Bid Documents

ISSUE DATE:
April 16, 2007

DFCM PROJECT NO: 95059480
CAD PROJECT NO: 2950
CAD DWG FILE:
DRAWN BY:
CHK'D BY:
COPYRIGHT: State of Utah

SHEET TITLE
ADMINISTRATION
FIRST FLOOR PLAN
ELECTRICAL

SHEET NUMBER
EE-1A1

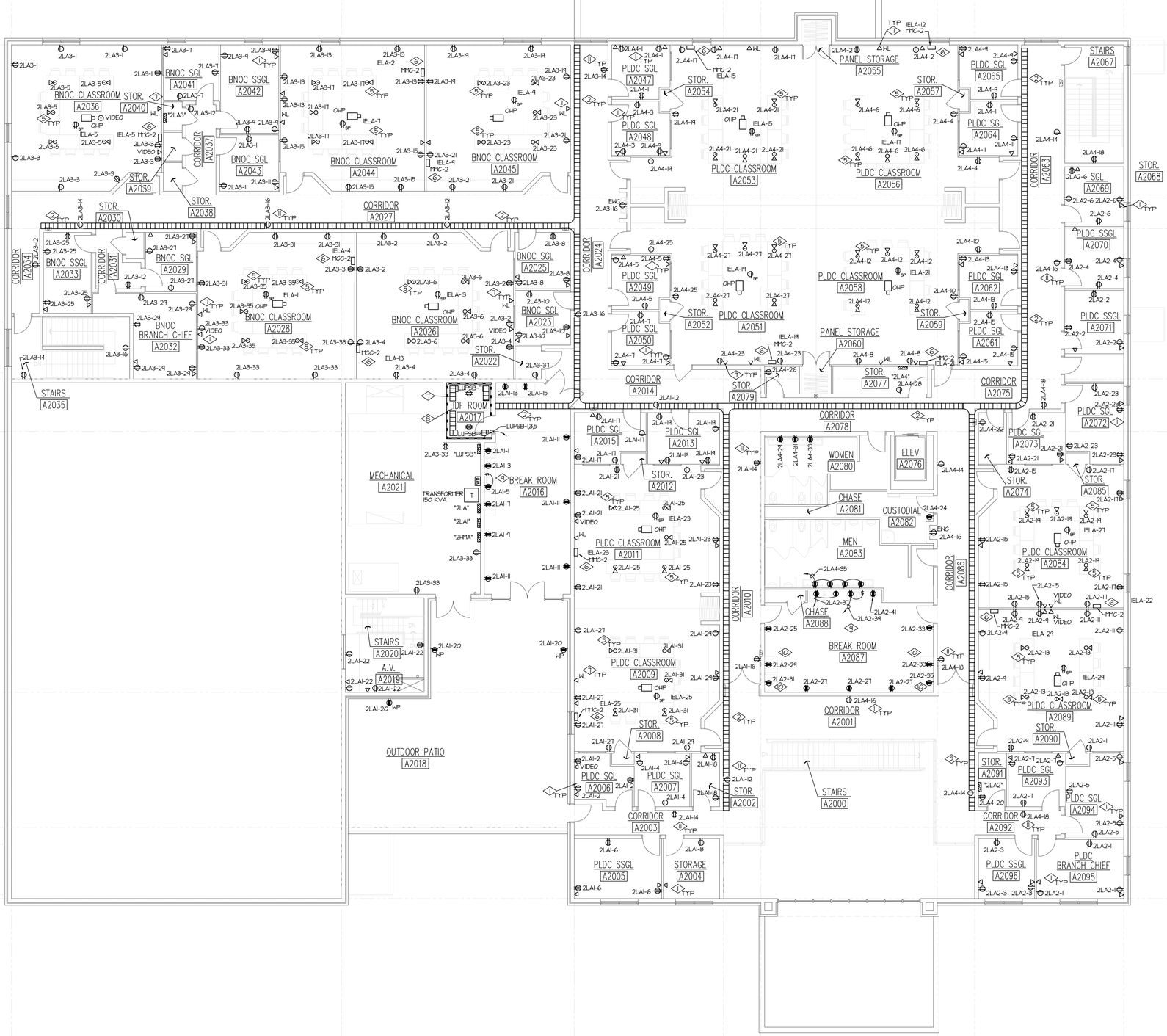

N SECOND FLOOR PLAN – ELECTRICAL

SCALE: 1/8" = 1'-0"

REFERENCE NOTES:

1. FURNISH AND INSTALL NEW COM/DATA OUTLETS IN THE APPROXIMATE LOCATION AS SHOWN. RUN CABLE (NUMBERS AS INDICATED) FROM COM/DATA OUTLETS THROUGH J-BOXES, POWER POLES, CONDUIT AND CABLE TRAY TO THE IDF ROOM ON SAME FLOOR. PROVIDE A MINIMUM OF 2 COM/DATA CABLES AT EACH LOCATION. PROVIDE 4-11/16", 2 1/8" J-BOX WITH MUDRING. RUN A MINIMUM OF 1" CONDUIT FROM EACH J-BOX TO THE CABLE TRAY.
2. FURNISH AND INSTALL NEW CABLE TRAYS IN THE CEILING AREA IN THE APPROXIMATE LOCATIONS SHOWN. THIS WORK MUST BE COORDINATED VERY CLOSELY WITH MECHANICAL DUCT WORK. PROVIDE ALL ELBOWS, OFFSETS, ETC. AS REQUIRED FOR A COMPLETE INSTALLATION. SECURE CABLE TRAYS EVERY 10' ON CENTER. LATERALLY BRACE CABLE TRAY EVERY 20' AND AT EACH END AND WHEN MAKING TRANSITION OR TURNS. GROUND EVERY SECTION OF THE CABLE TRAY.
3. FURNISH AND INSTALL 3/4" X 4' X 8' PLYWOOD ON ALL WALLS OF EACH COM/DATA ROOM. PROVIDE PLYWOOD WITH A DOUBLE COAT OF FIRE RETARDENT PAINT.
4. FURNISH AND INSTALL A GROUNDING BUSBAR ON THE WALL IN EACH COM/DATA ROOM. TIE THE BUSBAR TO THE MAIN GROUNDING RODS/WELLS.
5. FURNISH AND INSTALL FLOOR OUTLETS (WALKER #RC4-XXX FLUSH FLOOR POKE THROUGH OR APPROVED EQUAL IN THE APPROXIMATE LOCATIONS AS SHOWN. THE OUTLETS SHALL HAVE A MINIMUM OF FOUR (4) DATA PORTS AND TWO (2) DUPLEX OUTLETS. RUN (4) COM/DATA CABLES FROM FLOOR OUTLET TO THE IDF ROOM ON SAME FLOOR. UTILIZE A 1" CONDUIT TO THE CABLE TRAY.
6. REFER TO SHEET EE-6A6 FOR MORE INFORMATION.
7. FURNISH AND INSTALL COM/DATA OUTLET FOR WIRELESS SYSTEM ABOVE THE CEILING. PROVIDE COM/DATA CABLES AT EACH LOCATION AS INDICATED IN NOTE 1.
8. FURNISH AND INSTALL PLUG MOLD ON THE WALLS IN EACH COMM ROOM AND IN THE LOCATIONS AS SHOWN. USE NONMETALLIC MULTI-OUTLETS. ALTERNATE THE CIRCUITS.
9. FURNISH AND INSTALL A DUPLEX OUTLET UNDER THE SINK FOR DISPOSAL. PROVIDE 120 VOLT POWER THRU A SWITCH TO BE INSTALLED ABOVE THE COUNTER TOP TO OPERATE THE DISPOSAL.
10. UTILIZE #10 AHG FOR ALL VENDING MACHINE OUTLETS.
11. IN THE CORRIDORS PROVIDE 3 CIRCUITS AND ALTERNATE BETWEEN OUTLETS. UTILIZE 4 #10 AHG. CARRY ALL CONDUCTORS TO THE LAST DEVICE.

State of Utah
Department of Administrative Services

Division of Facilities Construction & Management
4110 State Office Building
Salt Lake City, Utah 84114
Phone: (801) 538 - 3018
Fax: (801) 538 - 3267
Internet: http://www.dfcm.state.ut.us

Utah National Guard
12953 South Minuteman Drive
Draper, Utah 84020-1726

E.C.E. INC., CONSULTING ENGINEERS
939 SO. WEST TEMPLE
SALT LAKE CITY, UTAH 84101
(801) 521-8007

BUILDING NAME:
ADMINISTRATION

PROJECT TITLE:
TASS COMPLEX
CAMP WILLIAMS
UTAH NATIONAL GUARD

MARK	DATE	DESCRIPTION

ISSUE TYPE: Final Bid Documents

ISSUE DATE: April 16, 2007

DFCM PROJECT NO: 95059480
CAD PROJECT NO: 2950
CAD DWG FILE:
DRAWN BY:
CHK'D BY: .
COPYRIGHT: State of Utah

SHEET TITLE
ADMINISTRATION
SECOND FLOOR PLAN
ELECTRICAL

SHEET NUMBER
EE-1A2

M MISCELLANEOUS
SCALE: NOT TO SCALE

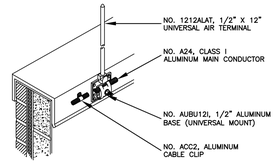

A AIR TERMINAL
SCALE: NOT TO SCALE

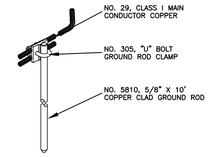

C GROUND ROD DETAIL
SCALE: NOT TO SCALE

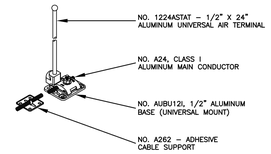

B SAFETY AIR TERMINAL
SCALE: NOT TO SCALE

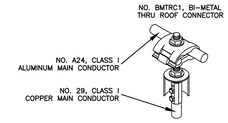

– THRU-ROOF PENETRATION
SCALE: NOT TO SCALE

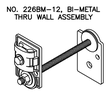

TW THRU-WALL PENETRATION
SCALE: NOT TO SCALE

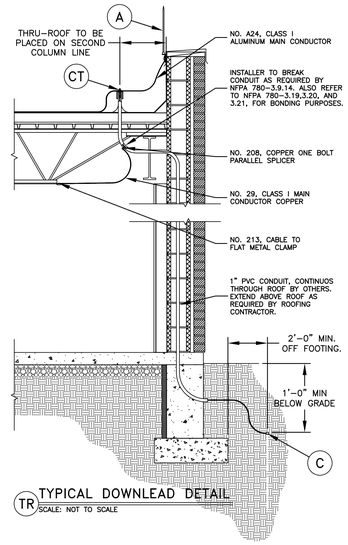

TR TYPICAL DOWNLEAD DETAIL
SCALE: NOT TO SCALE

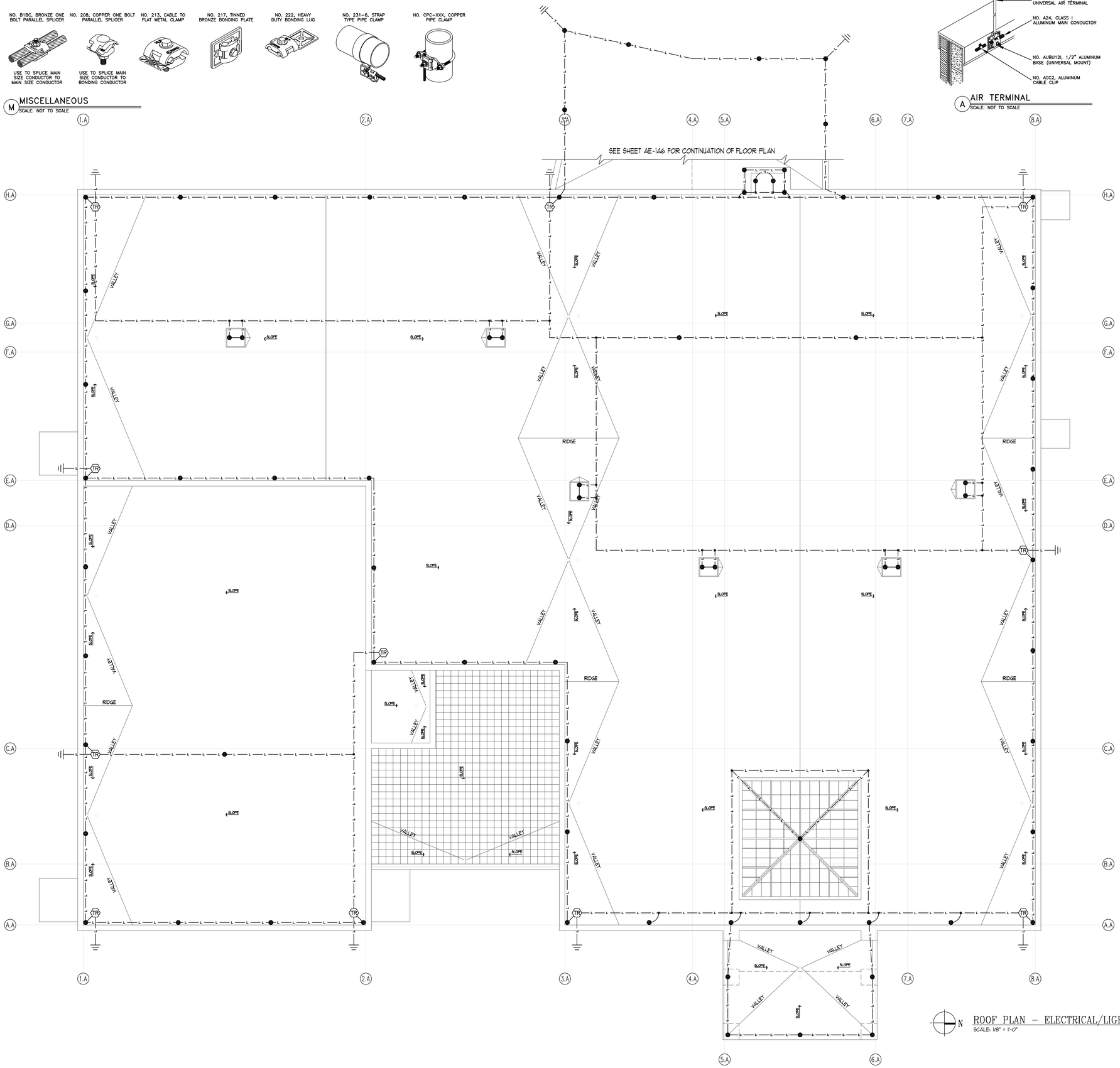

N ROOF PLAN – ELECTRICAL/LIGHTNING PROTECTION SYSTEM
SCALE: 1/8" = 1'-0"

State of Utah
Department of Administrative Services

Division of Facilities Construction & Management
4110 State Office Building
Salt Lake City, Utah 84114
Phone: (801) 538 - 3018
Fax: (801) 538 - 3267
Internet: http://www.dfcm.state.ut.us

Utah National Guard
12953 South Minuteman Drive
Draper, Utah 84020-1726

E.C.E. INC., CONSULTING ENGINEERS
939 SO. WEST TEMPLE
SALT LAKE CITY, UTAH 84101
(801) 521-8007

BUILDING NAME:
ADMINISTRATION

PROJECT TITLE:
TASS COMPLEX
CAMP WILLIAMS
UTAH NATIONAL GUARD

MARK	DATE	DESCRIPTION

ISSUE TYPE:
Final Bid Documents

ISSUE DATE:
April 16, 2007

DFCM PROJECT NO: 95059480
CAD PROJECT NO: 2950
CAD DWG FILE:
DRAWN BY:
CHK'D BY:
COPYRIGHT: State of Utah

SHEET TITLE
ADMINISTRATION
ROOF PLAN -
ELECTRICAL/LIGHTNING
PROTECTION SYSTEM

SHEET NUMBER
EE-1A3

REFERENCE NOTES:

1. PROVIDE 120 VOLT POWER TO T-1 TYPE FIXTURE THRU THE FLOOR OUTLETS AS SHOWN ON THE POWER PLAN.
2. FURNISH AND INSTALL NEW LIGHT SWITCHES FOR (T-1) TYPE LIGHT FIXTURES. EXACT LOCATION OF LIGHT SWITCHES SHALL BE COORDINATED WITH ARCHITECT.
3. TIE EACH SECTION OF CORRIDOR LIGHT FIXTURES TO THE SPECIFIED 3-WAY LIGHT SWITCH.
4. PROVIDE BODINE EMERGENCY RELAY(S) FOR THE EMERGENCY LIGHT FIXTURES. TIE THE FIXTURES TO THE SPECIFIED LIGHT SWITCHES. DURING ANY NORMAL LIGHTING POWER THEY SHOULD TURN ON THE EMERGENCY LIGHT FIXTURE.

NOTE:

1-IN ALL OFFICES AND AREA WITH TWO LIGHT SWITCHES, TIE HALF OF LIGHT FIXTURE(S) TO A LIGHT SWITCH.

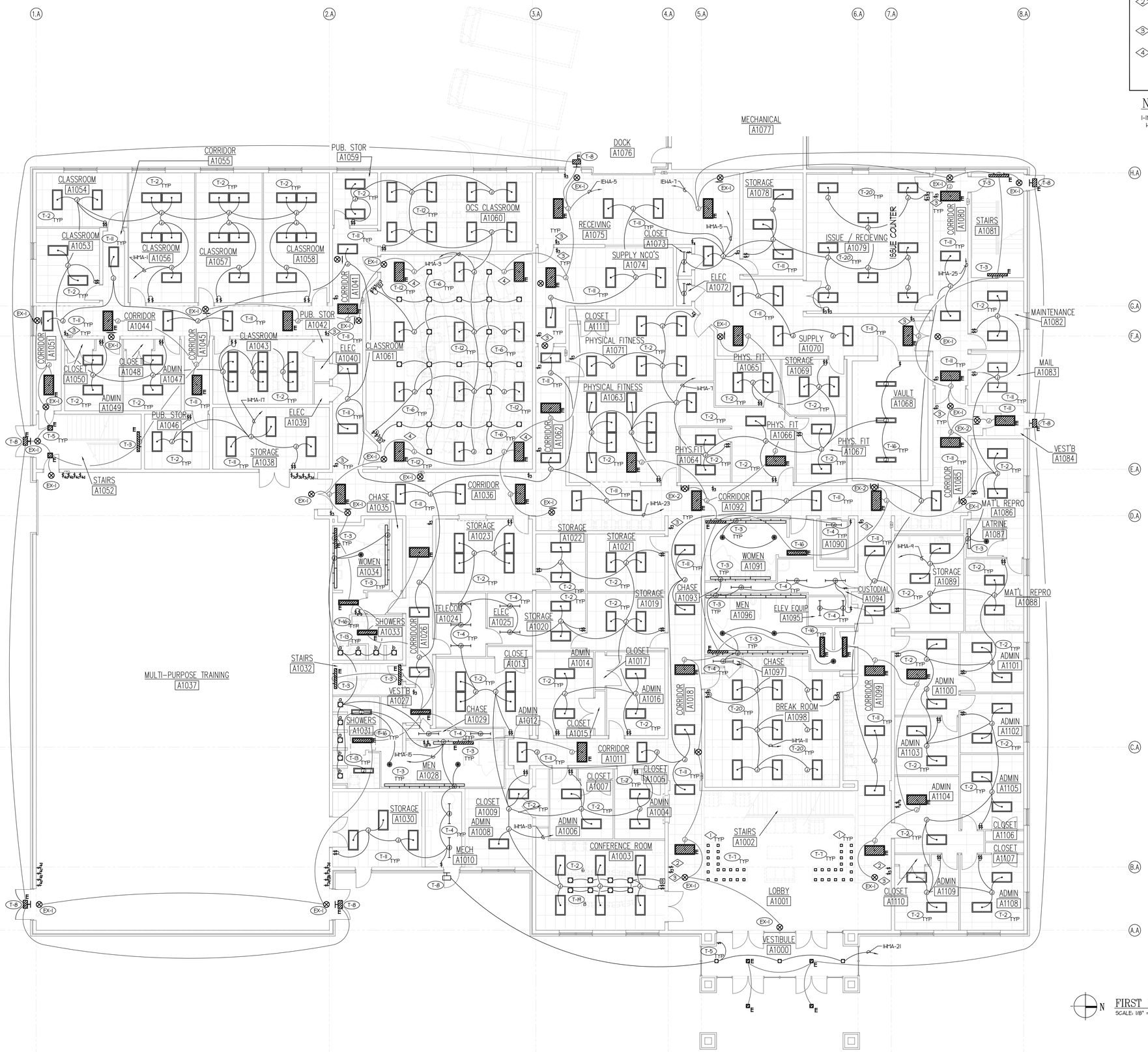

N

FIRST FLOOR PLAN – LIGHTING

SCALE: 1/8" = 1'-0"

State of Utah
Department of Administrative Services

Division of Facilities Construction & Management
4110 State Office Building
Salt Lake City, Utah 84114
Phone: (801) 538 - 3018
Fax: (801) 538 - 3267
Internet: http://www.dfcm.state.ut.us

Utah National Guard
12953 South Minuteman Drive
Draper, Utah 84020-1726

E.C.E. INC., CONSULTING ENGINEERS
939 SO. WEST TEMPLE
SALT LAKE CITY, UTAH 84101
(801) 521-8007

BUILDING NAME:
ADMINISTRATION

PROJECT TITLE:
TASS COMPLEX
CAMP WILLIAMS
UTAH NATIONAL GUARD

MARK	DATE	DESCRIPTION

ISSUE TYPE: Final Bid Documents

ISSUE DATE: April 16, 2007

DFCM PROJECT NO: 95059480
CAD PROJECT NO: 2950
CAD DWG FILE:
DRAWN BY:
CHK'D BY:
COPYRIGHT: State of Utah

SHEET TITLE
ADMINISTRATION
FIRST FLOOR PLAN
LIGHTING

SHEET NUMBER
EE-1A4

REFERENCE NOTES:

1. PROVIDE BODINE EMERGENCY RELAY(S) FOR THE EMERGENCY LIGHT FIXTURES. TIE THE FIXTURES TO THE SPECIFIED LIGHT SWITCHES. DURING ANY NORMAL LIGHTING POWER THEY SHOULD TURN ON THE EMERGENCY LIGHT FIXTURE.
2. TIE EACH SECTION OF CORRIDOR LIGHT FIXTURES TO THE SPECIFIED 3-WAY LIGHT SWITCH.

NOTE:

1-IN ALL OFFICES AND AREAS WITH TWO LIGHT SWITCHES, TIE HALF OF LIGHT FIXTURE(S) TO A LIGHT SWITCH.

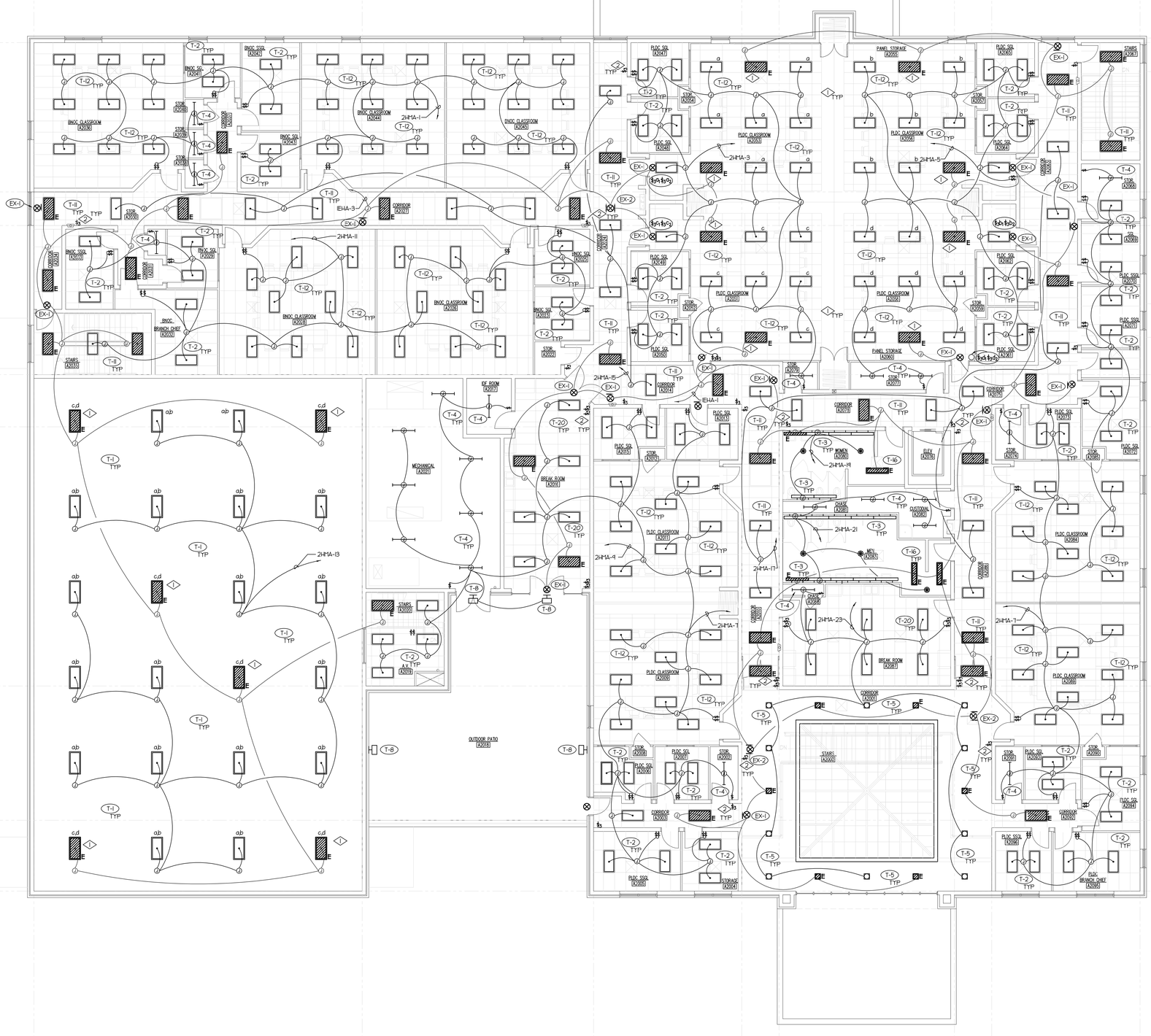

N

SECOND FLOOR PLAN – LIGHTING

SCALE: 1/8" = 1'-0"

State of Utah
Department of Administrative Services

Division of Facilities
Construction & Management

4110 State Office Building
Salt Lake City, Utah 84114
Phone: (801) 538 - 3018
Fax: (801) 538 - 3267

Internet: http://www.dfcm.state.ut.us

Utah National Guard

12953 South Minuteman Drive
Draper, Utah 84020-1726

E.C.E. INC., CONSULTING ENGINEERS
939 SO. WEST TEMPLE
SALT LAKE CITY, UTAH 84101
(801) 521-8007

BUILDING NAME:

ADMINISTRATION

PROJECT TITLE:

TASS COMPLEX
CAMP WILLIAMS

UTAH NATIONAL GUARD

MARK	DATE	DESCRIPTION

ISSUE TYPE:
Final Bid Documents

ISSUE DATE:
April 16, 2007

DFCM PROJECT NO: 95059480
CAD PROJECT NO: 2950
CAD DWG FILE:
DRAWN BY:
CHK'D BY: .
COPYRIGHT: State of Utah

SHEET TITLE

ADMINISTRATION
SECOND FLOOR PLAN
LIGHTING

SHEET NUMBER

EE-1A5

N

FIRST FLOOR PLAN – SYSTEMS

SCALE: 1/8" = 1'-0"

REFERENCE NOTES:

1. FURNISH AND INSTALL ADDRESSABLE FIRE ALARM DEVICES IN THE APPROXIMATE LOCATIONS AS SHOWN. TIE THE DEVICES TO FIRE ALARM CONTROL PANEL UTILIZING CLASS "A" LOOP. IN AND OUT CIRCUITS MUST BE IN SEPARATE CONDUIT.
2. TIE THE TAMPER AND FLOW SWITCHES TO FIRE ALARM CONTROL PANEL THRU AN ADDRESSABLE RELAY MODULE. PROVIDE A HORN AND STROBE WITH DIFFERENT SOUND OUT PUT TO SHOW THAT CONDUIT F.D.C. COORDINATE AND VERIFY EXACT LOCATION.
3. FURNISH AND INSTALL THERMAL DISCONNECT SWITCH AT EACH FIRE/SMOKE DAMPER. TIE FIRE/SMOKE DAMPER TO THE F.A.C.P. FOR AUTOMATIC SHUT DOWN UPON ALARM.
4. NOT USED.
5. TIE THE MECHANICAL EQUIPMENT TO THE CIRCUIT INDICATED THROUGH DISCONNECT SWITCH AND/OR VFD. REFER TO MECHANICAL EQUIPMENT SCHEDULE FOR MORE INFORMATION.
6. FURNISH AND INSTALL NEW F.A.C.P. IN THE APPROXIMATE LOCATION SHOWN. PROVIDE TWO TELEPHONE LINES TO F.A.C.P. FOR MONITORING.
7. FURNISH AND INSTALL NEW CLOCKS ON THE WALL IN THE APPROXIMATE LOCATIONS AS SHOWN. PROVIDE BATTERIES AS REQUIRED PER MANUFACTURER REQUIREMENTS. THE CLOCKS TO MEET THE FOLLOWING REQUIREMENTS:
   - A. AUTOMATICALLY SETS ITSELF TO THE US ATOMIC CLOCK.
   - B. SHOWS THE OFFICIAL US TIME IN HOURS, MINUTES AND SECONDS.
   - C. BRUSHED ALUMINUM 12" FRAME (16" FRAME IN MULTI-PURPOSE TRAINING A1037).
   - D. AUTOMATICALLY ADJUSTS TO DAYLIGHT SAVING TIMES.
   - E. TO RUN ON ONE AA BATTERY.
8. FURNISH AND INSTALL J-BOXES AND INDIVIDUAL RACEWAYS FOR SENSORS, KEYPADS, PIR, DOOR POSITION SWITCH AND SIRENS. RUN A 3/4" CONDUIT FROM EACH J-BOX TO THE CONTROL PANEL.
9. FURNISH AND INSTALL NEW FIRE ALARM REMOTE ANNUNCIATION PANEL IN THE APPROXIMATE LOCATIONS SHOWN. TIE THE F.A.R.A.P. TO FIRE ALARM CONTROL PANEL PER MANUFACTURER RECOMMENDATIONS.
10. FURNISH AND INSTALL EUROPLEX 2064NG ON THE WALL INSIDE THE VAULT COMPLETE WITH POWER SUPPLY, TRANSFORMERS, CONTROLLER, DIALOG CARD, SURGE SUPPRESS AND TWO 12V, 7AH BATTERIES, IN NEMA "1" TYPE ENCLOSURE.
11. FURNISH AND INSTALL MATCHING KEYPAD ON THE WALL IN THE APPROXIMATE LOCATION SHOWN.
12. FURNISH AND INSTALL BALANCED MAGNETIC SWITCHES (BMS) TYPE 2480T.
13. FURNISH AND INSTALL PASSIVE INFRARED SENSORS (PIR) IN THE CEILING.
14. FURNISH AND INSTALL WALL MOUNTED SEISMIC DETECTORS.
15. INSTALL CELL ANTENNA ABOVE THE VAULT.

State of Utah
Department of Administrative Services

Division of Facilities Construction & Management
4110 State Office Building
Salt Lake City, Utah 84114
Phone: (801) 538 - 3018
Fax: (801) 538 - 3267
Internet: http://www.dfcm.state.ut.us

Utah National Guard
12953 South Minuteman Drive
Draper, Utah 84020-1726

E.C.E. INC., CONSULTING ENGINEERS
939 SO. WEST TEMPLE
SALT LAKE CITY, UTAH 84101
(801) 521-8007

BUILDING NAME:
ADMINISTRATION

PROJECT TITLE:
TASS COMPLEX
CAMP WILLIAMS
UTAH NATIONAL GUARD

MARK	DATE	DESCRIPTION

ISSUE TYPE: Final Bid Documents

ISSUE DATE: April 16, 2007

DFCM PROJECT NO: 95059480
CAD PROJECT NO: 2950
CAD DWG FILE:
DRAWN BY:
CHK'D BY:
COPYRIGHT: State of Utah

SHEET TITLE
ADMINISTRATION
FIRST FLOOR PLAN
SYSTEM

SHEET NUMBER
EE-1A6

N SECOND FLOOR PLAN – SYSTEM

SCALE: 1/8" = 1'-0"

REFERENCE NOTES:

1. FURNISH AND INSTALL ADDRESSABLE FIRE ALARM DEVICES IN THE APPROXIMATE LOCATIONS AS SHOWN. TIE THE DEVICES TO FIRE ALARM CONTROL PANEL UTILIZING CLASS "A" LOOP. IN AND OUT CIRCUITS MUST BE IN SEPARATE CONDUIT.
2. FURNISH AND INSTALL SMOKE BEAM DETECTORS IN THE APPROXIMATE LOCATIONS AS SHOWN. TIE THE DETECTORS TO THE FIRE ALARM CONTROL PANEL PER MANUFACTURER RECOMMENDATIONS.
3. FURNISH AND INSTALL THERMAL DISCONNECT SWITCH AT EACH FIRE/SMOKE DAMPER. TIE FIRE/SMOKE DAMPER TO THE F.A.C.P. FOR AUTOMATIC SHUT DOWN UPON ALARM.
4. FURNISH AND INSTALL NEW SMOKE DETECTORS (DUCT DETECTOR) WITH SAMPLING TUBE AS REQUIRED IN AIR RETURN DUCTS IN THE APPROXIMATE LOCATIONS AS SHOWN. TIE THE DETECTORS TO THE FIRE ALARM CONTROL PANEL. UTILIZE CLASS "A" LOOP. IN AND OUT CIRCUITS MUST BE IN SEPARATE CONDUIT. PROVIDE RELAYS, AUXILIARY RELAYS, ETC. AS REQUIRED TO SHUTDOWN MECHANICAL EQUIPMENT DURING FIRE ALARM IN THE BUILDING OR IF THE DUCT DETECTOR GOES INTO ALARM.
5. TIE THE MECHANICAL EQUIPMENT TO THE CIRCUIT INDICATED THROUGH DISCONNECT SWITCH AND/OR VFD. REFER TO MECHANICAL EQUIPMENT SCHEDULE FOR MORE INFORMATION.
6. FURNISH AND INSTALL NEW GFCI, WEATHERPROOF DUPLEX OUTLET NEAR THE MECHANICAL UNITS AND TIE THEM TO A 20 AMP, 120 VOLT SPARE BREAKER IN THE NEAREST PANEL.
7. FURNISH AND INSTALL NEW CLOCKS ON THE WALL IN THE APPROXIMATE LOCATIONS AS SHOWN. PROVIDE BATTERIES AS REQUIRED PER MANUFACTURER REQUIREMENTS. THE CLOCKS TO MEET THE FOLLOWING REQUIREMENTS:
   - A. AUTOMATICALLY SETS ITSELF TO THE US ATOMIC CLOCK.
   - B. SHOWS THE OFFICIAL US TIME IN HOURS, MINUTES AND SECONDS.
   - C. BRUSHED ALUMINUM 12" FRAME.
   - D. AUTOMATICALLY ADJUSTS TO DAYLIGHT SAVING TIMES.
   - E. TO RUN ON ONE AA BATTERY.

State of Utah
Department of Administrative Services

Division of Facilities Construction & Management
4110 State Office Building
Salt Lake City, Utah 84114
Phone: (801) 538 - 3018
Fax: (801) 538 - 3267
Internet: http://www.dfcm.state.ut.us

Utah National Guard
12953 South Minuteman Drive
Draper, Utah 84020-1726

E.C.E. INC., CONSULTING ENGINEERS
939 SO. WEST TEMPLE
SALT LAKE CITY, UTAH 84101
(801) 521-8007

BUILDING NAME:
ADMINISTRATION

PROJECT TITLE:
TASS COMPLEX
CAMP WILLIAMS
UTAH NATIONAL GUARD

MARK	DATE	DESCRIPTION

ISSUE TYPE:
Final Bid Documents

ISSUE DATE:
April 16, 2007

DFCM PROJECT NO: 95059480
CAD PROJECT NO: 2950
CAD DWG FILE:
DRAWN BY:
CHK'D BY: .
COPYRIGHT: State of Utah

SHEET TITLE
ADMINISTRATION
SECOND FLOOR PLAN
SYSTEM

SHEET NUMBER
EE-1A7

REFERENCE NOTES:

1. FURNISH AND INSTALL ADDRESSABLE FIRE ALARM DEVICES IN THE APPROXIMATE LOCATIONS AS SHOWN. TIE THE DEVICES TO FIRE ALARM CONTROL PANEL UTILIZING CLASS "A" LOOP. IN AND OUT CIRCUITS MUST BE IN SEPARATE CONDUIT.
2. FURNISH AND INSTALL CEILING MOUNTED FIRE DETECTOR IN THE CEILING ABOVE THE GENERATOR. TIE THE DETECTOR TO FIRE ALARM CONTROL PANEL. PROVIDE ADDRESSABLE RELAYS, ETC. AS REQUIRED FOR A COMPLETE INSTALLATION.
3. TIE THE FIXTURES DESIGNATED WITH A LETTER TO THE ASSIGNED LIGHT SWITCHES.
4. FURNISH AND INSTALL ASTRONOMICAL TIME CLOCK IN THE APPROXIMATE LOCATION AS SHOWN TO AUTOMATICALLY "ON" AND "OFF" THE OUT DOOR FIXTURES AT PREDETERMINED TIMES.
5. FURNISH AND INSTALL NEW COM/DATA OUTLETS IN THE APPROXIMATE LOCATION AS SHOWN. RUN CABLE (NUMBERS AS INDICATED) FROM COM/DATA OUTLETS THROUGH J-BOXES, POWER POLES, CONDUIT AND CABLE TRAY TO THE IDF ROOM ON SAME FLOOR. PROVIDE A MINIMUM OF 2 COM/DATA CABLES AT EACH LOCATION. PROVIDE 4-11/16", 2-1/8" J-BOX WITH MUDRING. RUN A MINIMUM OF 1" CONDUIT FROM EACH J-BOX TO THE CABLE TRAY.

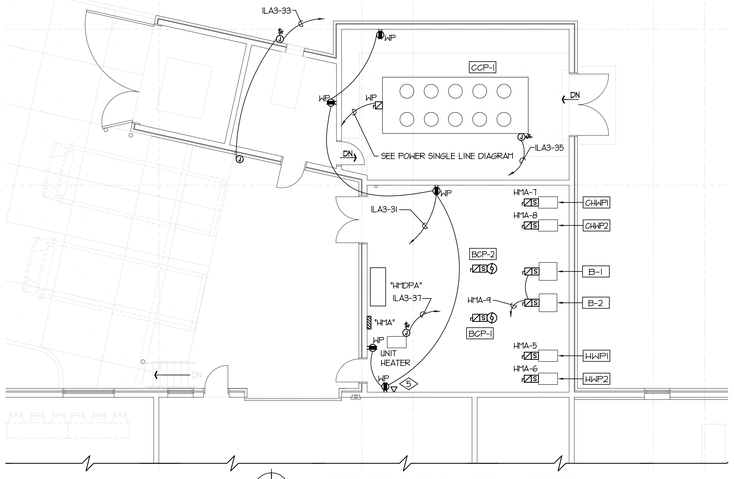

N MECHANICAL ROOM AREA – POWER
SCALE: 1/8" = 1'-0"

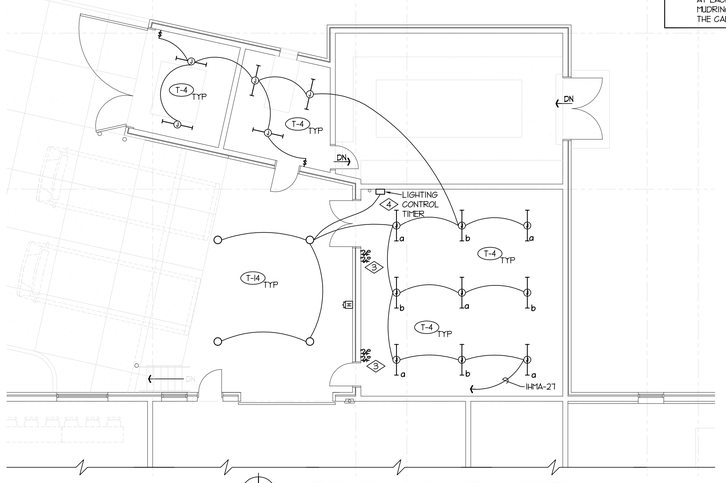

N MECHANICAL ROOM AREA – LIGHTING
SCALE: 1/8" = 1'-0"

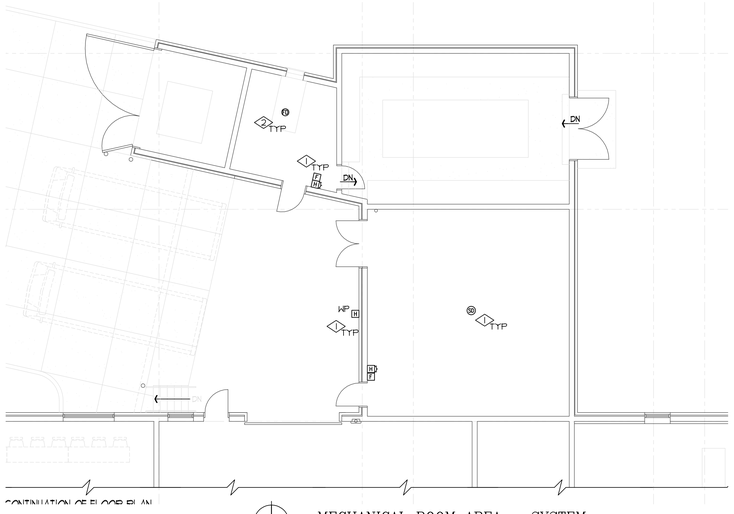

N MECHANICAL ROOM AREA – SYSTEM
SCALE: 1/8" = 1'-0"

CONTINUATION OF FLOOR PLAN

State of Utah
Department of Administrative Services

Division of Facilities Construction & Management
4110 State Office Building
Salt Lake City, Utah 84114
Phone: (801) 538 - 3018
Fax: (801) 538 - 3267
Internet: http://www.dfcm.state.ut.us

Utah National Guard
12953 South Minuteman Drive
Draper, Utah 84020-1726

E.C.E. INC., CONSULTING ENGINEERS
939 SO. WEST TEMPLE
SALT LAKE CITY, UTAH 84101
(801) 521-8007

BUILDING NAME:
ADMINISTRATION

PROJECT TITLE:
TASS COMPLEX
CAMP WILLIAMS
UTAH NATIONAL GUARD

MARK	DATE	DESCRIPTION

ISSUE TYPE: Final Bid Documents

ISSUE DATE: April 16, 2007

DFCM PROJECT NO: 95059480
CAD PROJECT NO: 2950
CAD DWG FILE:
DRAWN BY:
CHK'D BY: .
COPYRIGHT: State of Utah

SHEET TITLE
MECHANICAL ROOM AREA

SHEET NUMBER
EE-1A8

REFERENCE NOTES:

1. FURNISH AND INSTALL NEW COM/DATA OUTLETS IN THE WALL IN THE APPROXIMATE LOCATIONS AS SHOWN. TIE THE OUTLETS TO IDF/BDF. UTILIZE 1" CONDUIT.
2. FURNISH AND INSTALL NEW DATA OUTLETS IN THE WALL FOR WIRELESS SYSTEM IN THE APPROXIMATE LOCATION AS SHOWN. TIE THE OUTLETS TO IDF/BDF. UTILIZE 1" CONDUIT.
3. FURNISH AND INSTALL 3/4" PLYWOOD ON ALL THE WALLS IN IDF/BDF ROOM. APPLY DOUBLE COAT OF FIRE RETARDANT PAINT.
4. PROVIDE COPPER GROUNDING BUS BAR.
5. INSTALL TRANSFORMER ONT HE WALL ABOVE PANEL "ELB".
6. PROVIDE 120 V EMERGENCY POWER TO ASSISTED DOOR OPERATORS. INSTALL DOOR OPERATORS ON EACH SIDE OF EACH DOOR. TIE THE DOOR OPERATORS TO THE DOOR CONTROLLER PER MANUFACTURERS RECONNECTION. PROVIDE CONDUIT, CONDUCTORS, J-BOX ETC., FOR A COMPLETE INSTALLATION.

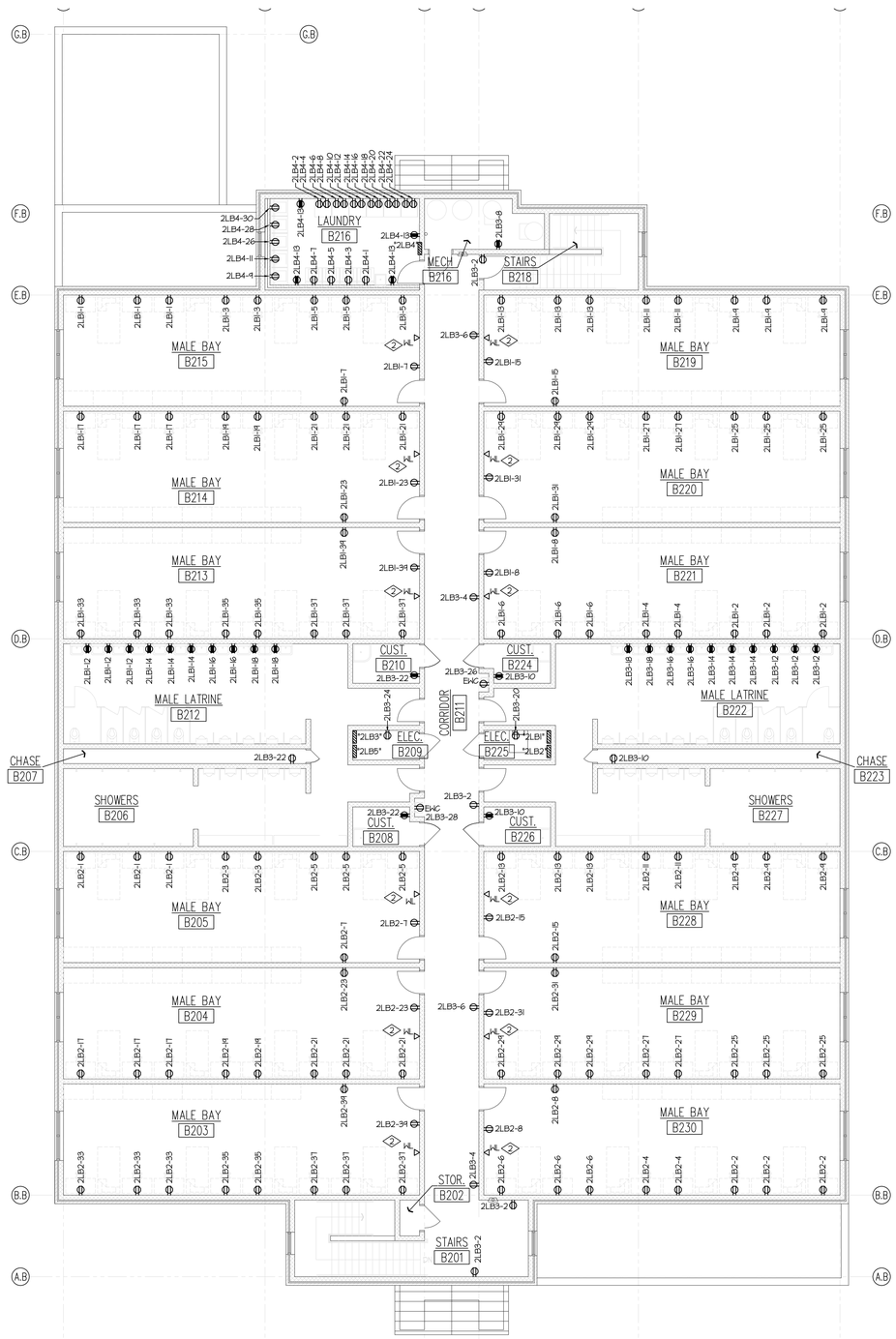

SECOND FLOOR PLAN – ELECTRICAL
SCALE: 1/8" = 1'-0"

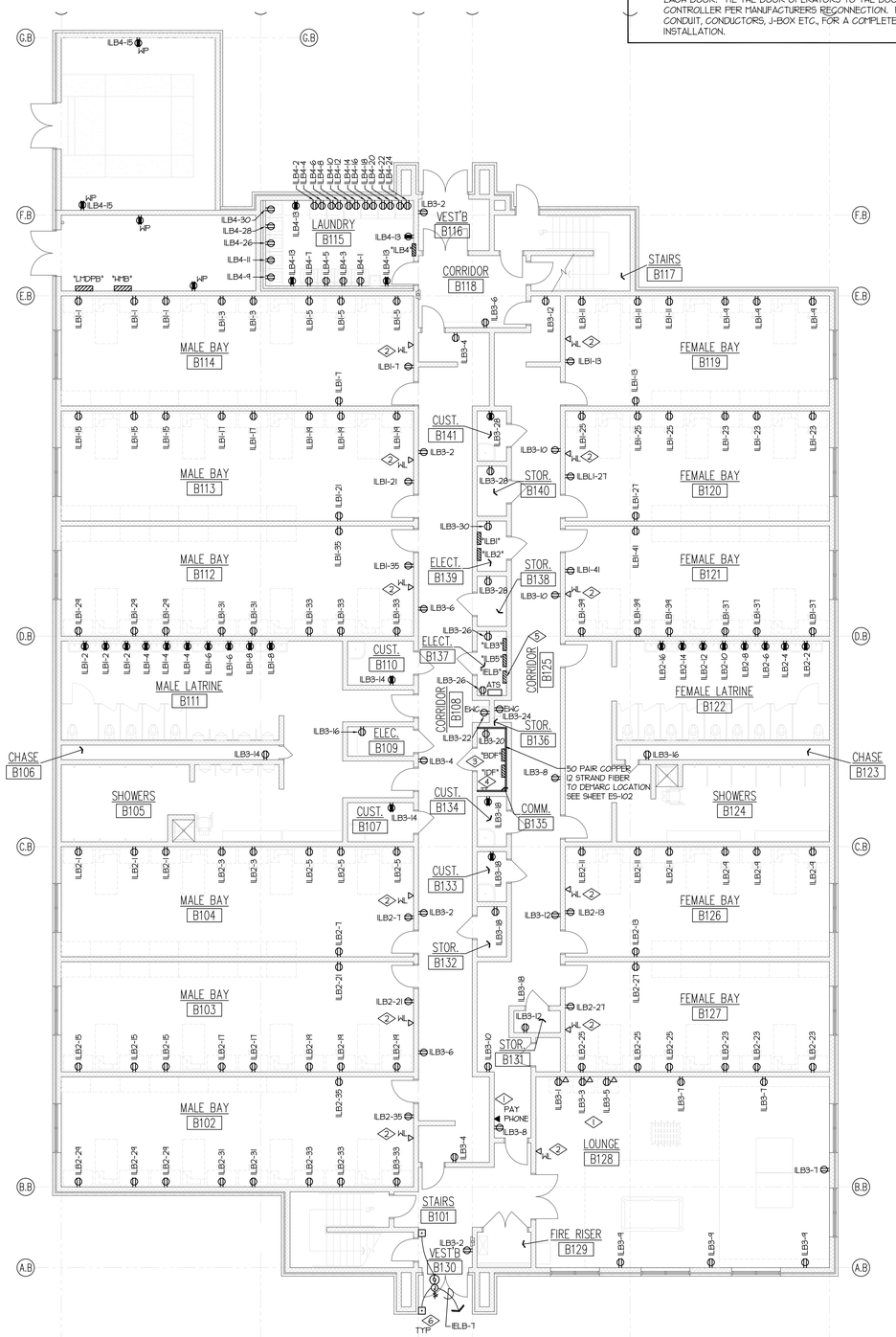

FIRST FLOOR PLAN – ELECTRICAL
SCALE: 1/8" = 1'-0"

State of Utah
Department of Administrative Services

Division of Facilities
Construction & Management

4110 State Office Building
Salt Lake City, Utah 84114
Phone: (801) 538 - 3018
Fax: (801) 538 - 3267

Internet: http://www.dfcm.state.ut.us

Utah National Guard

12953 South Minuteman Drive
Draper, Utah 84020-1726

E.C.E. INC., CONSULTING ENGINEERS
939 SO. WEST TEMPLE
SALT LAKE CITY, UTAH 84101
(801) 521-8007

BUILDING NAME:
BILLETING

PROJECT TITLE:
TASS COMPLEX
CAMP WILLIAMS

UTAH NATIONAL GUARD

MARK	DATE	DESCRIPTION

ISSUE TYPE:
Final Bid Documents

ISSUE DATE:
April 16, 2007

DFCM PROJECT NO: 95059480
CAD PROJECT NO: 2950
CAD DWG FILE:
DRAWN BY:
CHK'D BY: .
COPYRIGHT: State of Utah

SHEET TITLE
BAY BILLETING BUILDING
FLOOR PLANS
ELECTRICAL

SHEET NUMBER
EE-1B1

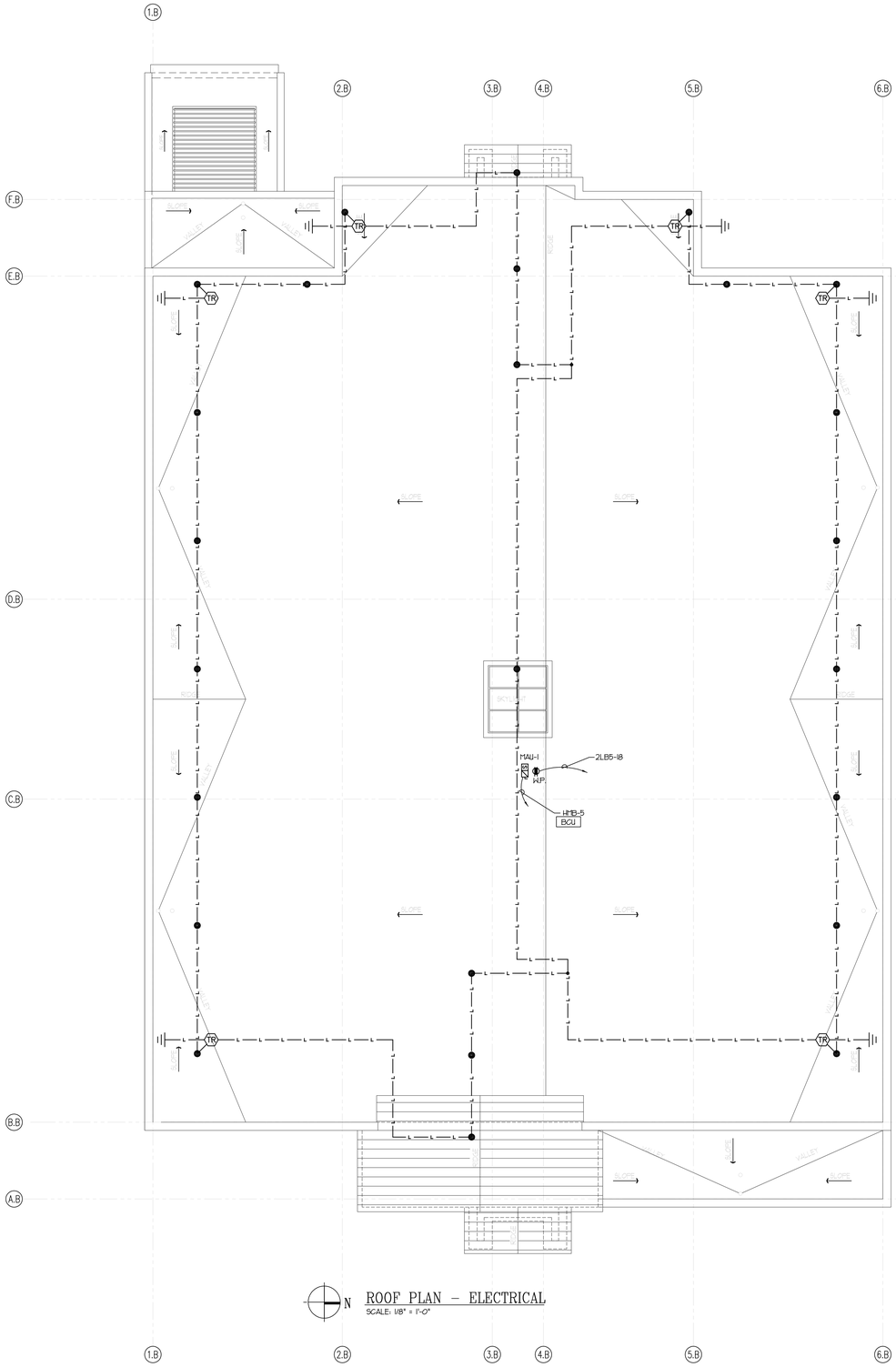

N

ROOF PLAN – ELECTRICAL

SCALE: 1/8" = 1'-0"

State of Utah
Department of Administrative Services

Division of Facilities
Construction & Management

4110 State Office Building
Salt Lake City, Utah 84114
Phone: (801) 538 - 3018
Fax: (801) 538 - 3267

Internet: http://www.dfcm.state.ut.us

Utah National Guard

12953 South Minuteman Drive
Draper, Utah 84020-1726

E.C.E. INC., CONSULTING ENGINEERS
939 SO. WEST TEMPLE
SALT LAKE CITY, UTAH 84101
(801) 521-8007

BUILDING NAME:

BILLETING

PROJECT TITLE:

TASS COMPLEX
CAMP WILLIAMS

UTAH NATIONAL GUARD

MARK	DATE	DESCRIPTION

ISSUE TYPE:
Final Bid Documents

ISSUE DATE:
April 16, 2007

DFCM PROJECT NO: 95059480
CAD PROJECT NO: 2950
CAD DWG FILE:
DRAWN BY:
CHK'D BY: .
COPYRIGHT: State of Utah

SHEET TITLE

BAY BILLETING BUILDING
ROOF PLAN
ELECTRICAL

SHEET NUMBER

EE-1B2

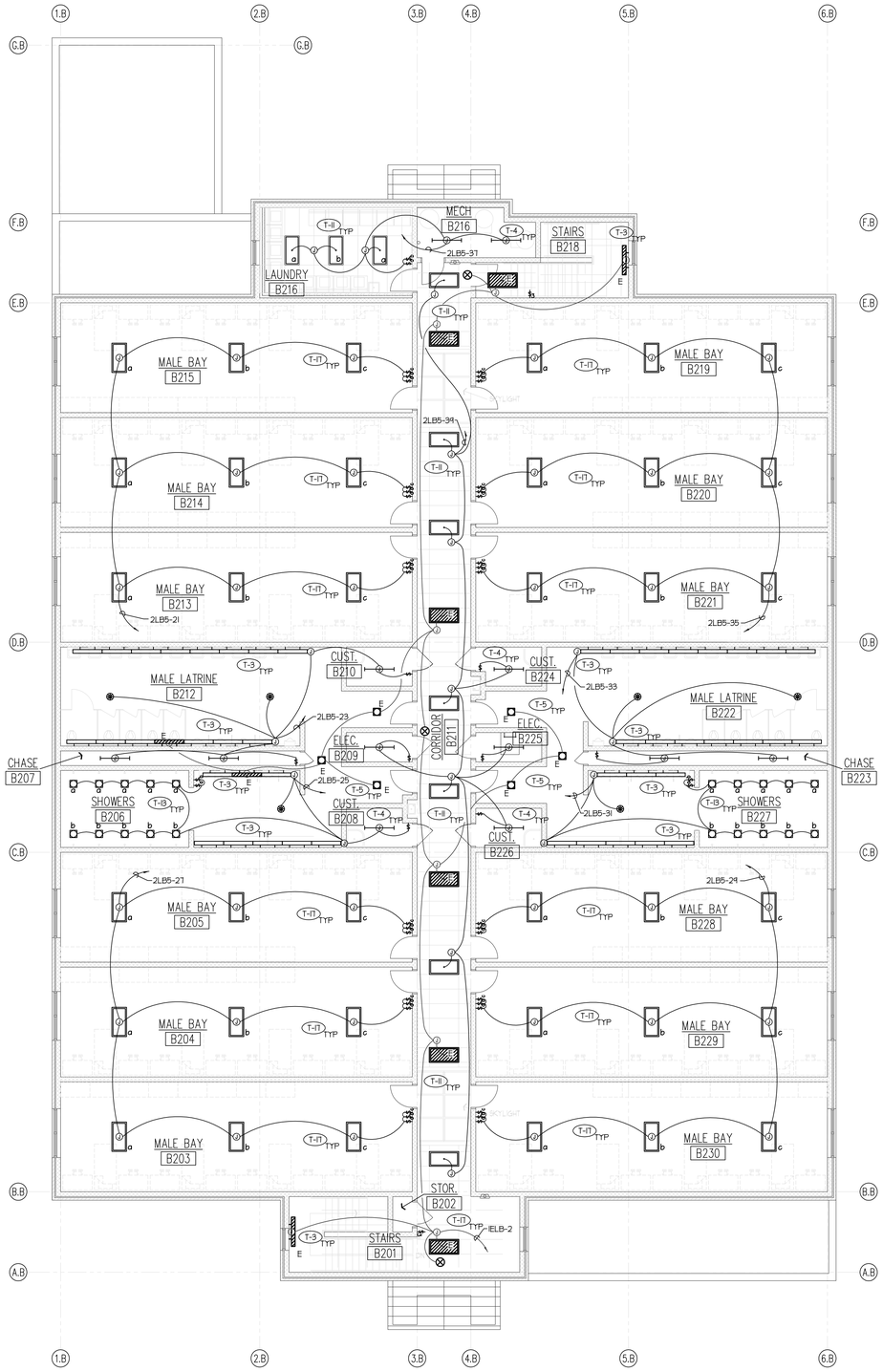

N SECOND FLOOR PLAN – LIGHTING

SCALE: 1/8" = 1'-0"

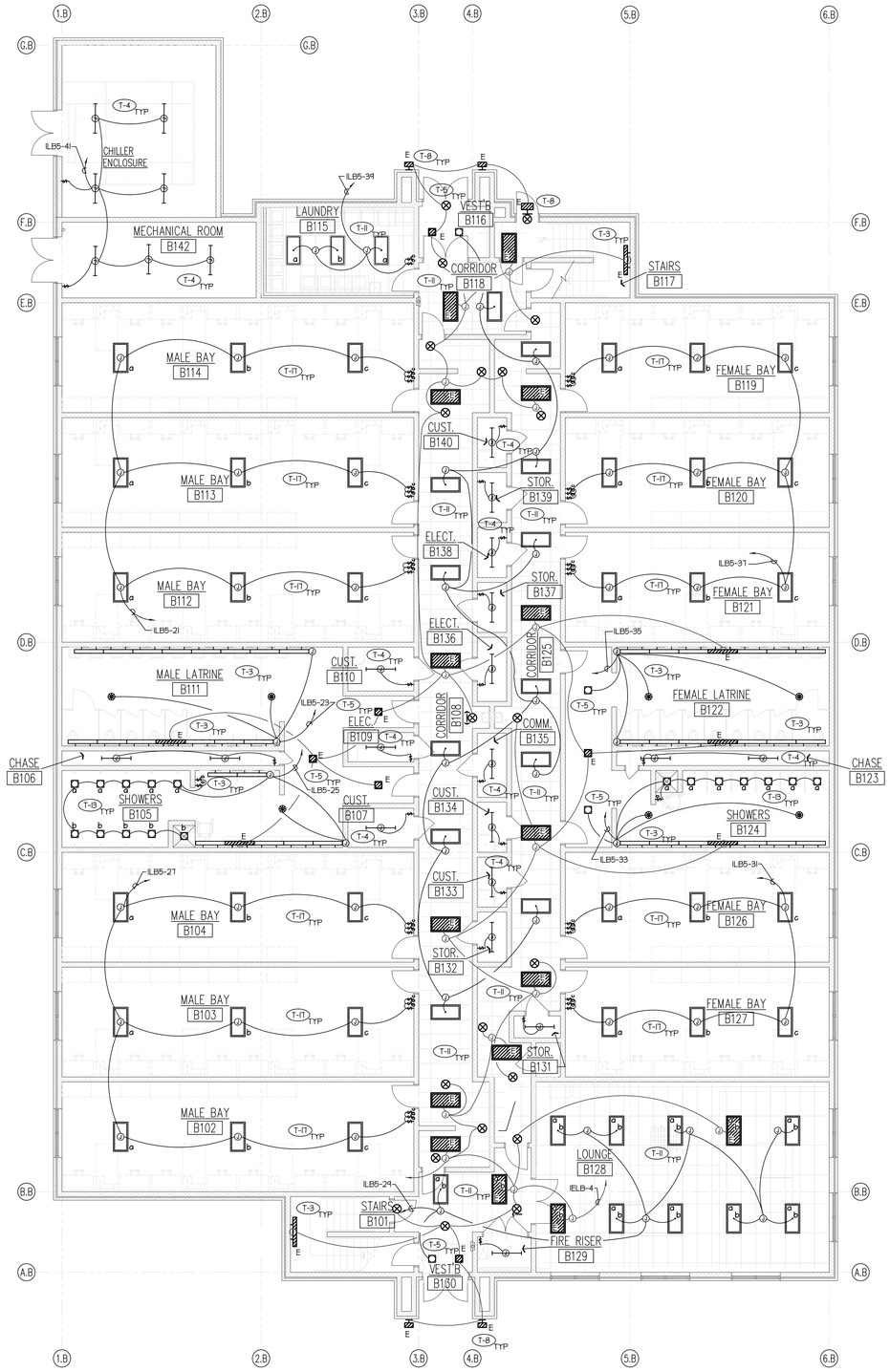

N FIRST FLOOR PLAN – LIGHTING

SCALE: 1/8" = 1'-0"

State of Utah
Department of Administrative Services

Division of Facilities
Construction & Management

4110 State Office Building
Salt Lake City, Utah 84114
Phone: (801) 538 - 3018
Fax: (801) 538 - 3267

Internet: http://www.dfcm.state.ut.us

Utah National Guard

12953 South Minuteman Drive
Draper, Utah 84020-1726

E.C.E. INC., CONSULTING ENGINEERS
939 SO. WEST TEMPLE
SALT LAKE CITY, UTAH 84101
(801) 521-8007

BUILDING NAME:

BILLETING

PROJECT TITLE:

TASS COMPLEX
CAMP WILLIAMS

UTAH NATIONAL GUARD

MARK	DATE	DESCRIPTION

ISSUE TYPE:
Final Bid Documents

ISSUE DATE:
April 16, 2007

DFCM PROJECT NO: 95059480
CAD PROJECT NO: 2950
CAD DWG FILE:
DRAWN BY:
CHK'D BY: .
COPYRIGHT: State of Utah

SHEET TITLE

BAY BILLETING BUILDING
FLOOR PLANS
LIGHTING

SHEET NUMBER

EE-1B3

131 OF 146

REFERENCE NOTES:

1. FURNISH AND INSTALL ADDRESSABLE FIRE ALARM DEVICES IN THE APPROXIMATE LOCATIONS AS SHOWN. TIE THE DEVICES TO FIRE ALARM CONTROL PANEL UTILIZING CLASS "A" LOOP. IN AND OUT CIRCUITS MUST BE IN SEPARATE CONDUIT.
2. TIE THE TAMPER AND FLOW SWITCHES TO FIRE ALARM CONTROL PANEL THRU AN ADDRESSABLE RELAY MODULE.
3. FURNISH AND INSTALL NEW F.A.C.P. IN THE APPROXIMATE LOCATION SHOWN. PROVIDE TWO TELEPHONE LINES TO F.A.C.P. FOR MONITORING.
4. FURNISH AND INSTALL THERMAL DISCONNECT SWITCH AT EACH FIRE/SMOKE DAMPER. TIE FIRE/SMOKE DAMPER TO THE F.A.C.P. FOR AUTOMATIC SHUT DOWN UPON ALARM.

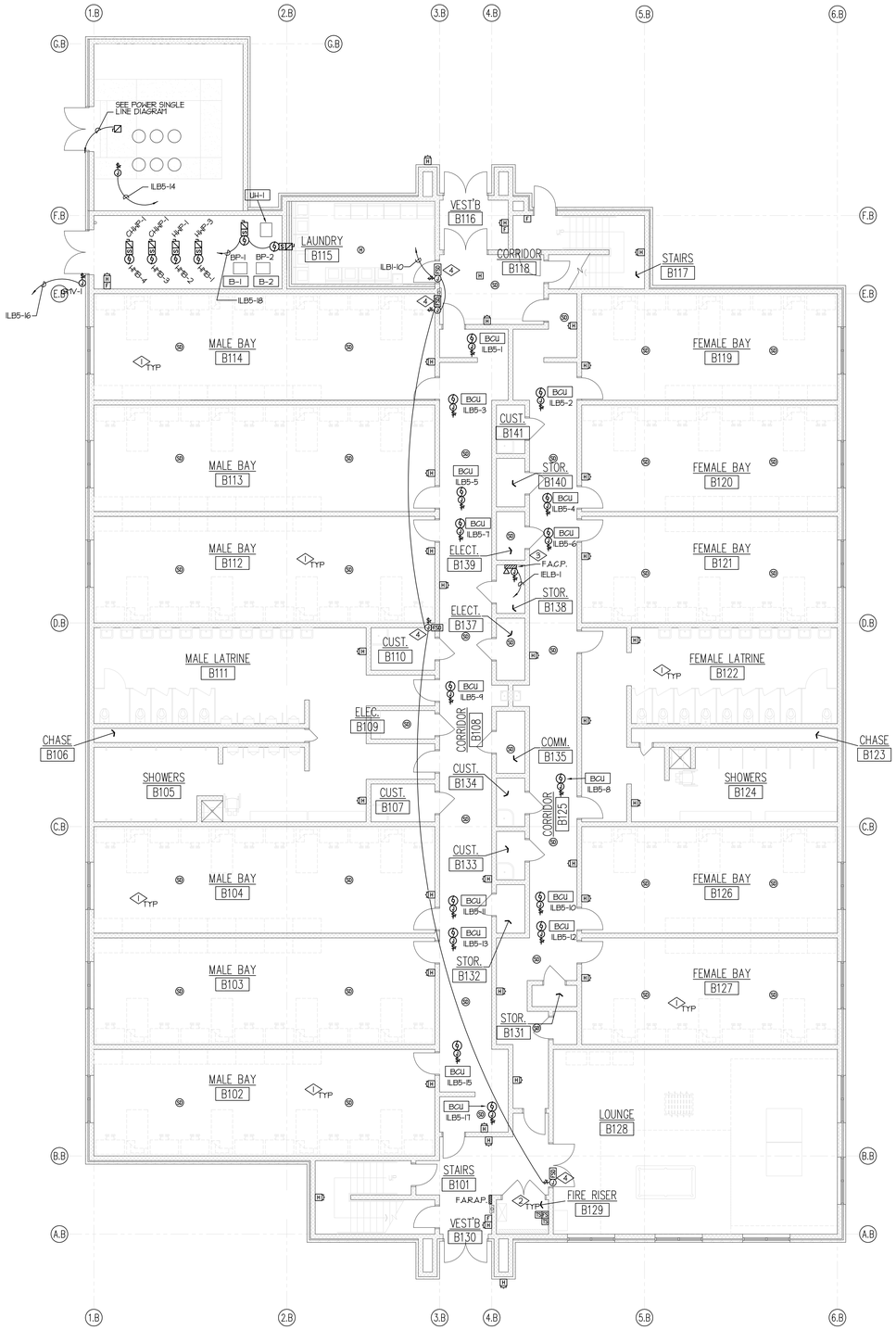

N

FIRST FLOOR PLAN – SYSTEMS

SCALE: 1/8" = 1'-0"

State of Utah
Department of Administrative Services

Division of Facilities Construction & Management
4110 State Office Building
Salt Lake City, Utah 84114
Phone: (801) 538 - 3018
Fax: (801) 538 - 3267
Internet: http://www.dfcm.state.ut.us

Utah National Guard
12953 South Minuteman Drive
Draper, Utah 84020-1726

E.C.E. INC., CONSULTING ENGINEERS
939 SO. WEST TEMPLE
SALT LAKE CITY, UTAH 84101
(801) 521-8007

BUILDING NAME:

BILLETING

PROJECT TITLE:

TASS COMPLEX
CAMP WILLIAMS

UTAH NATIONAL GUARD

MARK	DATE	DESCRIPTION

ISSUE TYPE:
Final Bid Documents

ISSUE DATE:
April 16, 2007

DFCM PROJECT NO: 95059480
CAD PROJECT NO: 2950
CAD DWG FILE:
DRAWN BY:
CHK'D BY: .
COPYRIGHT: State of Utah

SHEET TITLE

BAY BILLETING BUILDING
FIRST FLOOR PLAN
SYSTEM

SHEET NUMBER

EE-1B4

REFERENCE NOTES:

1. FURNISH AND INSTALL ADDRESSABLE FIRE ALARM DEVICES IN THE APPROXIMATE LOCATIONS AS SHOWN. TIE THE DEVICES TO FIRE ALARM CONTROL PANEL UTILIZING CLASS "A" LOOP, IN AND OUT CIRCUITS MUST BE IN SEPARATE CONDUIT.
2. TIE THE TAMPER AND FLOW SWITCHES TO FIRE ALARM CONTROL PANEL THRU AN ADDRESSABLE RELAY MODULE.
3. FURNISH AND INSTALL NEW F.A.C.P. IN THE APPROXIMATE LOCATION SHOWN. PROVIDE TWO TELEPHONE LINES TO F.A.C.P. FOR MONITORING.
4. FURNISH AND INSTALL THERMAL DISCONNECT SWITCH AT EACH FIRE/SMOKE DAMPER. TIE FIRE/SMOKE DAMPER TO THE F.A.C.P. FOR AUTOMATIC SHUT DOWN UPON ALARM.

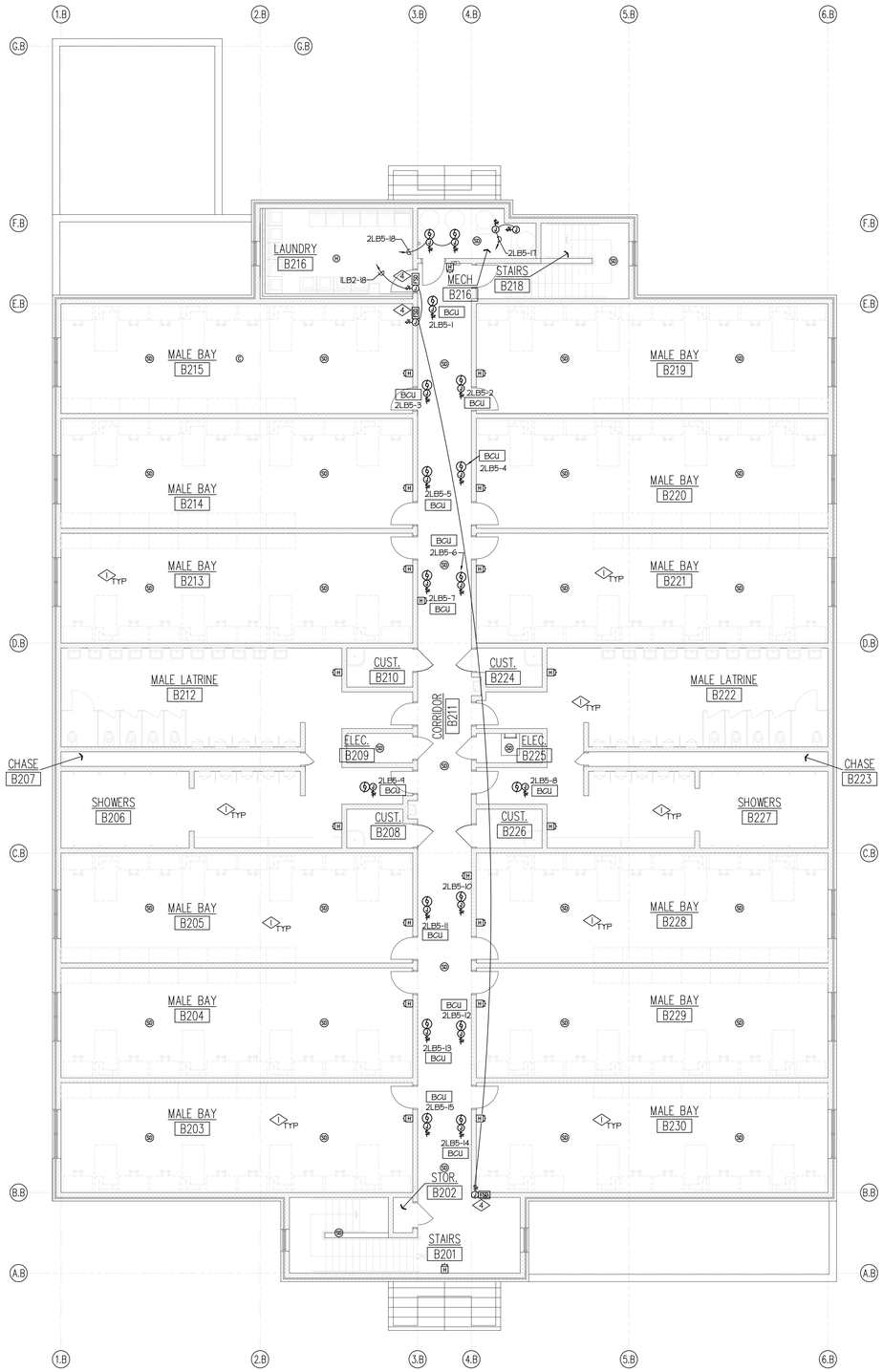

N SECOND FLOOR PLAN – SYSTEMS

SCALE: 1/8" = 1'-0"

State of Utah
Department of Administrative Services

Division of Facilities
Construction & Management

4110 State Office Building
Salt Lake City, Utah 84114
Phone: (801) 538 - 3018
Fax: (801) 538 - 3267

Internet: http://www.dfcm.state.ut.us

Utah National Guard

12953 South Minuteman Drive
Draper, Utah 84020-1726

E.C.E. INC., CONSULTING ENGINEERS
939 SO. WEST TEMPLE
SALT LAKE CITY, UTAH 84101
(801) 521-8007

BUILDING NAME:

BILLETING

PROJECT TITLE:

TASS COMPLEX
CAMP WILLIAMS

UTAH NATIONAL GUARD

MARK	DATE	DESCRIPTION

ISSUE TYPE:
Final Bid Documents

ISSUE DATE:
April 16, 2007

DFCM PROJECT NO: 95059480
CAD PROJECT NO: 2950
CAD DWG FILE:
DRAWN BY:
CHK'D BY: .
COPYRIGHT: State of Utah

SHEET TITLE

BAY BILLETING BUILDING
SECOND FLOOR PLAN
SYSTEM

SHEET NUMBER

EE-1B5

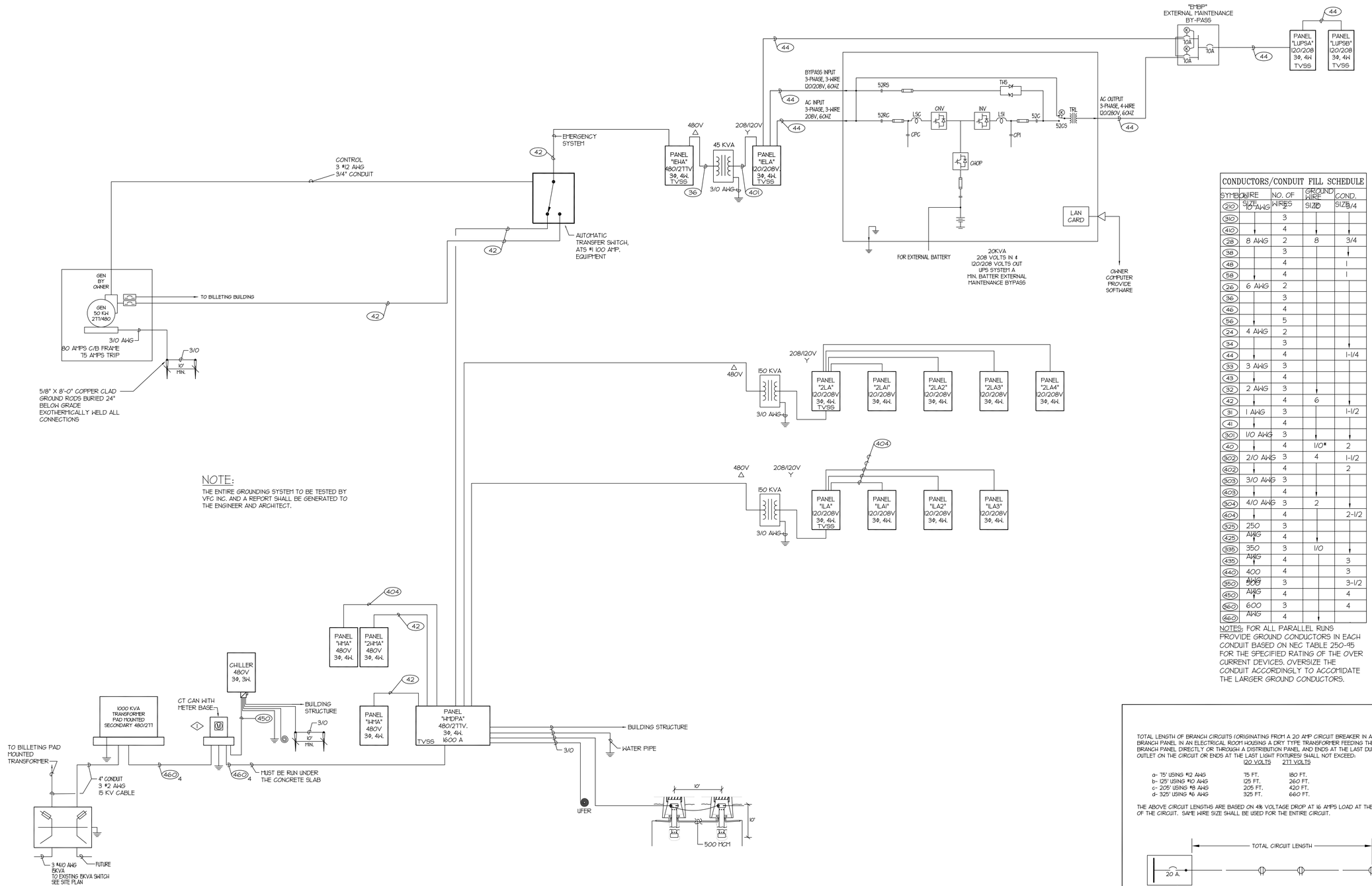

NOTE:
THE ENTIRE GROUNDING SYSTEM TO BE TESTED BY VFC INC. AND A REPORT SHALL BE GENERATED TO THE ENGINEER AND ARCHITECT.

CONDUCTORS/CONDUIT FILL SCHEDULE				
SYMBOL	WIRE SIZE	NO. OF WIRES	GROUND WIRE SIZE	COND. SIZE
210	10 AWG	2		
310		3		
410		4		
28	8 AWG	2	8	3/4
38		3		
48		4		1
58		4		1
26	6 AWG	2		
36		3		
46		4		
56		5		
24	4 AWG	2		
34		3		
44		4		1-1/4
33	3 AWG	3		
43		4		
32	2 AWG	3		
42		4	6	
31	1 AWG	3		1-1/2
41		4		
301	1/0 AWG	3		
40		4	1/0*	2
302	2/0 AWG	3	4	1-1/2
402		4		2
303	3/0 AWG	3		
403		4		
304	4/0 AWG	3	2	
404		4		2-1/2
325	250 AWG	3		
425		4		
395	350 AWG	3	1/0	
435		4		3
440	400 AWG	4		3
350	500 AWG	3		3-1/2
450		4		4
360	600 AWG	3		4
460		4		

NOTES: FOR ALL PARALLEL RUNS PROVIDE GROUND CONDUCTORS IN EACH CONDUIT BASED ON NEC TABLE 250-95 FOR THE SPECIFIED RATING OF THE OVER CURRENT DEVICES. OVERSIZE THE CONDUIT ACCORDINGLY TO ACCOMIDATE THE LARGER GROUND CONDUCTORS.

TOTAL LENGTH OF BRANCH CIRCUITS (ORIGINATING FROM A 20 AMP CIRCUIT BREAKER IN A BRANCH PANEL IN AN ELECTRICAL ROOM HOUSING A DRY TYPE TRANSFORMER FEEDING THE BRANCH PANEL DIRECTLY OR THROUGH A DISTRIBUTION PANEL AND ENDS AT THE LAST DUPLEX OUTLET ON THE CIRCUIT OR ENDS AT THE LAST LIGHT FIXTURES) SHALL NOT EXCEED:

	120 VOLTS	277 VOLTS
a- 75' USING #12 AWG	75 FT.	180 FT.
b- 125' USING #10 AWG	125 FT.	260 FT.
c- 205' USING #8 AWG	205 FT.	420 FT.
d- 325' USING #6 AWG	325 FT.	660 FT.

THE ABOVE CIRCUIT LENGTHS ARE BASED ON 4% VOLTAGE DROP AT 16 AMPS LOAD AT THE END OF THE CIRCUIT. SAME WIRE SIZE SHALL BE USED FOR THE ENTIRE CIRCUIT.

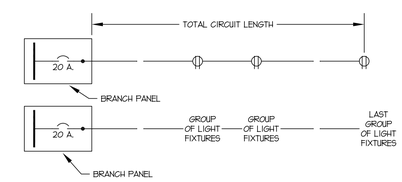

SCALE: N.T.S.

TYPICAL BRANCH CIRCUIT LENGTH DETAIL

State of Utah
Department of Administrative Services

Division of Facilities
Construction & Management

4110 State Office Building
Salt Lake City, Utah 84114
Phone: (801) 538 - 3018
Fax: (801) 538 - 3267

Internet: http://www.dfcm.state.ut.us

Utah National Guard

12953 South Minuteman Drive
Draper, Utah 84020-1726

E.C.E. INC., CONSULTING ENGINEERS
939 SO. WEST TEMPLE
SALT LAKE CITY, UTAH 84101
(801) 521-8007

BUILDING NAME:
ADMINISTRATION

PROJECT TITLE:
TASS COMPLEX
CAMP WILLIAMS

UTAH NATIONAL GUARD

MARK	DATE	DESCRIPTION

ISSUE TYPE:
Final Bid Documents

ISSUE DATE:
April 16, 2007

DFCM PROJECT NO: 95059480
CAD PROJECT NO: 2950
CAD DWG FILE:
DRAWN BY:
CHK'D BY: .
COPYRIGHT: State of Utah

SHEET TITLE
ADMINISTRATION
POWER SINGLE LINE
DIAGRAM
& DETAILS

SHEET NUMBER
EE-6A1

PROVIDE:
a-80% OF (SD) PER CIRCUIT (20% SPARE)

b-80% OF ALL OTHER ADDRESSABLE DEVICES PER CIRCUIT (20% SPARE)

c-64% OF ALL NOTIFICATION DEVICES (36% SPARE)

d-ALL RELAYS FOR FIRE SMOKE DAMPER, ETC. SHALL CONSIST OF TWO RELAYS, ONE SLAVE AND ONE 20 AMPS RATED TO RUN REQUIRED TO REQUIRED DEVICES.

e-THE RISER IS FOR INFORMATION PURPOSES ONLY. FIRE ALARM SUPPLIER TO PROVIDE ACCURATE DRAWING FOR APPROVAL.

NOTE:
1. IN AND OUT CABLES TO THE DEVICES MUST RUN IN A SEPARATE CONDUIT. 3/4" CONDUIT SHALL BE THE MINIMUM SIZE. UTILIZE CLASS "A" LOOP.
EXCEPTION:
A SINGLE 1/2" STEEL FLEXIBLE CONDUIT LESS THAN 6' LONG TO A SINGLE SMOKE DETECTOR, OR OTHER SINGLE ADDRESSABLE INITIATING DEVICE. THE ADDRESSABLE LOOP MAY FEED AND RETURN IN THE SAME 1/2" FLEXIBLE CONDUIT.

2. ALL FIRE ALARM DEVICES, CONTROL PANELS, REMOTE ANNUNCIATOR PANEL AND DATA GATHERING PANELS SHALL BE FURNISHED BY CONTRACTOR AND INSTALLED BY CONTRACTOR.

3. ALL PROGRAMMING WILL BE DONE BY CONTRACTOR.

4. ALL LABELING TO BE DONE BY CONTRACTOR.

5. ALL WIRING TO BE DONE BY CONTRACTOR.

6. PROVIDE AN ADDRESSABLE RELAY FOR EACH POWER SUPPLY.

7. ALL STROBES SHALL BE SYNCHRONIZED IN THE ENTIRE BUILDING THRU THE PANEL.

8. COORDINATE EXACT NUMBER AND LOCATION OF ALL TAMPER, FLOW SWITCHES AND PIV VALVES WITH THE FIRE SPRINKLER DRAWINGS.

9. LOCATION OF DD TO BE COORDINATED WITH MECHANICAL CONTRACTOR.

10. VERIFY NUMBER AND LOCATION OF ATC PANELS PER MECHANICAL DRAWINGS

IMPORTANT NOTE:
1. CONDUCTOR TYPE MIGHT BE DIFFERENT FROM DIFFERENT MANUFACTURE. PROVIDE PROPER CABLE, HARDWARE, SOFTWARE, PROGRAMMING, ETC. AS REQUIRED FOR A COMPLETE INSTALLATION.

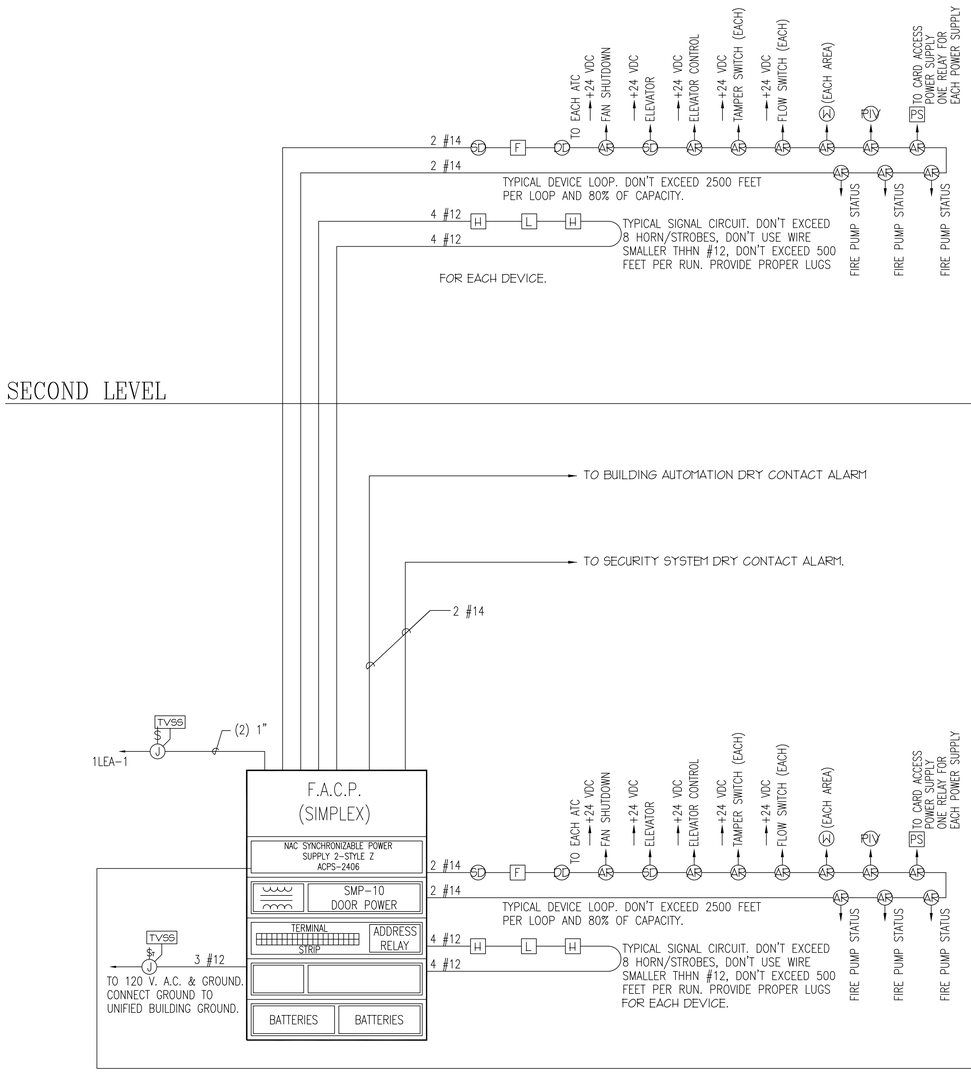

SECOND LEVEL

FIRST LEVEL

SCALE: N.T.S.	TYPICAL FIRE ALARM SINGLE LINE DIAGRAM

A – NON-SHEILDED CABLE CONTAINING:
ONE RED AND ONE BLACK #16 STRAND WEST PENN CDT #225
ONE PAIR #16 AWG (UL) TYPE CMR C (UL) 75C B2192

State of Utah
Department of Administrative Services

Division of Facilities Construction & Management
4110 State Office Building
Salt Lake City, Utah 84114
Phone: (801) 538 - 3018
Fax: (801) 538 - 3267
Internet: http://www.dfcm.state.ut.us

Utah National Guard
12953 South Minuteman Drive
Draper, Utah 84020-1726

E.C.E. INC., CONSULTING ENGINEERS
939 SO. WEST TEMPLE
SALT LAKE CITY, UTAH 84101
(801) 521-8007

BUILDING NAME:
ADMINISTRATION

PROJECT TITLE:
TASS COMPLEX
CAMP WILLIAMS

UTAH NATIONAL GUARD

MARK	DATE	DESCRIPTION

ISSUE TYPE:
Final Bid Documents

ISSUE DATE:
April 16, 2007

DFCM PROJECT NO: 95059480
CAD PROJECT NO: 2950
CAD DWG FILE:
DRAWN BY:
CHK'D BY:
COPYRIGHT: State of Utah

SHEET TITLE
ADMINISTRATION
TYPICAL FIRE ALARM
SINGLE LINE
DIAGRAM & NOTES

SHEET NUMBER
EE-6A2

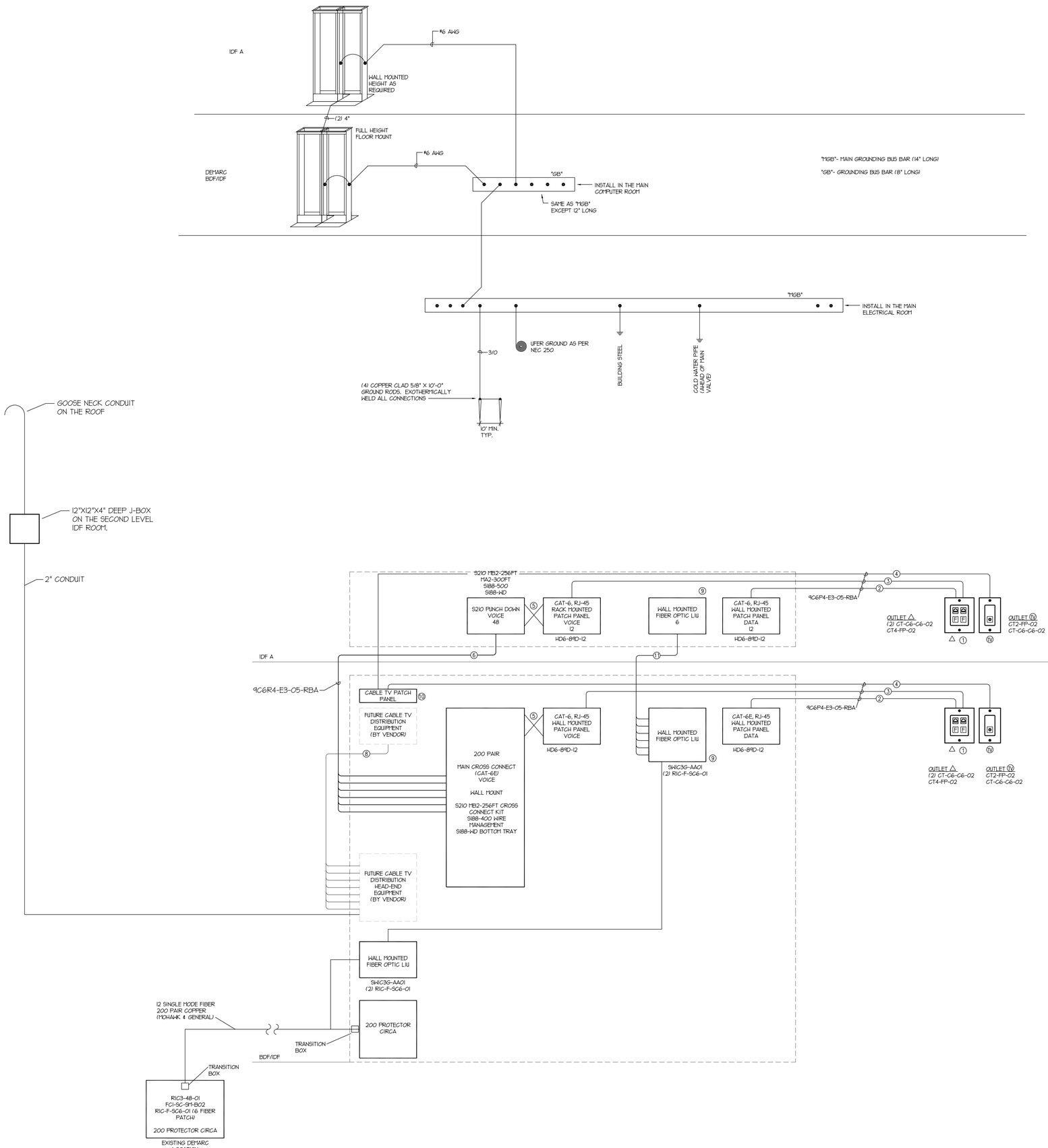

BUILDING COMMUNICATIONS RISER DIAGRAM

SCALE: NOT TO SCALE

KEYED NOTES:

1. ONE OUTLET WITH 4 JACKS PER LOAD.
2. MINIMUM (2) 4-PAIR CAT-6 CMR TO EACH OUTLET COMMUNICATIONS PANEL FOR DATA. TERMINATE ALL FOUR PAIRS.
3. (1) 4-PAIR CAT-6 CMR TO EACH OUTLET COMMUNICATIONS PANEL FOR PHONE. TERMINATE ALL FOUR PAIRS.
4. (1) RG-6/U QUAD-SHIELD RISER RATED TO EACH OUTLET FOR CABLE TV SIGNAL BY OTHERS.
5. CROSS-CONNECT FROM THE CABLE IN NOTE 1 ABOVE TO THE MAIN CROSS CONNECT.
6. CAT-6 CMR.
7. TERMINATE THE COAX CABLE IN NOTE 4 ABOVE, FROM EACH TV OUTLET, ON A RACK MOUNTED PATCH PANEL, WITH F-TYPE CONNECTORS.
8. CABLE TV RISER CABLES TO BE FURNISHED AND INSTALLED BY THE CABLE TV SERVICE PROVIDER.
9. FIBER OPTIC RISER CABLES.
10. CROSS-CONNECTS.
11. FOUR STAND MULTI-MODE.

NOTE:

1. SIEMONS IS THE APPROVED SYSTEM.
2. PROVIDE STANDARD WARRANTIES TO THE OWNER AND CERTIFY INSTALLED SYSTEM.

State of Utah
Department of Administrative Services

Division of Facilities Construction & Management
4110 State Office Building
Salt Lake City, Utah 84114
Phone: (801) 538 - 3018
Fax: (801) 538 - 3267

Internet: http://www.dfcm.state.ut.us

Utah National Guard
12953 South Minuteman Drive
Draper, Utah 84020-1726

E.C.E. INC., CONSULTING ENGINEERS
939 SO. WEST TEMPLE
SALT LAKE CITY, UTAH 84101
(801) 521-8007

BUILDING NAME:
ADMINISTRATION

PROJECT TITLE:
TASS COMPLEX
CAMP WILLIAMS

UTAH NATIONAL GUARD

MARK	DATE	DESCRIPTION

ISSUE TYPE:
Final Bid Documents

ISSUE DATE:
April 16, 2007

DFCM PROJECT NO: 95059480
CAD PROJECT NO: 2950
CAD DWG FILE:
DRAWN BY:
CHK'D BY: .
COPYRIGHT: State of Utah

SHEET TITLE
ADMINISTRATION
COMMUNICATION
SYSTEM
SINGLE LINE DIAGRAMS

SHEET NUMBER
EE-6A3

	DESCRIPTION	DETAILS		MANUFACTURER	CATALOG NUMBER	PICTURE
T-1	Fluorescent light fixture 2X4 w ith clear bottom lens suitable for high bay illumination. Tw o light levels.	Lamp	4F54 HO	Columbia	LHR4-454-LS-ST-4EB5277-FSA-CLEAR	
		Voltage	277	Lightolier	FLND454EB1-CL277	
		Mounting	Surface	Lithonia	FHB-24-4-54T5HO-B 1X12-mvolt-1/4-TUBPHP-CL	
		Finish	White	Metalux	2HB-454T5-G-CL-277V-EBT1	
				L.A. Lighting	HBI600-4-4M-SR-CA-2E5H-277V	
T-2	Fluorescent light fixture 2X4 parabolic, 4" deep louver, 24 cell. Semi specular.	Lamp	3F32	Columbia	4524-332G-LD38-S-EB8LH277	
		Voltage	277	Lightolier	VPA2G27PP332-277-03	
		Mounting	Grid	Lithonia	2PM4GB-3-32-24LD-Mvolt-1/3-TUBPHP	
		Finish	White	Metalux	2PGX-332S38I-277V-ER81	
T-3	Fluoresenct light fixture 8"X8" length and lamp as required. Tw o lamps dow n, one lamp up. Louver bottom, lens on top.	Lamp	3f32	Alera	MS8-1AU2D-T8-WM-LD-EB8LH277-SCBA-DC	
		Voltage	272	Gammalux	GS96B-1/232T8-277-ERS-??-WM-APL/BB-WH	
		Mounting	Wall	Prudential	P 69 2T8/1T8 04 SPL TMWD3 DC 277 WS 10	
		Finish	White	Neor	14DIW-1/2T8-4FT-277V EB-S1-S58/S79	
T-4	4' fluorescent strip light fixture w ith w ire guard and reflector.	Lamp	2f32	Columbia	CSR4-232-EB8LH277-CSWG4	
		Voltage	277	Lightolier	SW4S232-277-SO w /w ire guard and reflector	
		Mounting	Chain	Lithonia	C 2 32 277 TUBPHP CSMR 48 WGCSMR	
		Finish	White	Metalux	IC-232-277V-ER81-WG/DI-4FT-U	
T-5	Fluorescent dow n light fixture 8" aperture, low irridescent. 8" maximum depth, w ith semi specular trim.	Lamp	1-32w	Prescolite	CFT832EB-STF802	
		Voltage	277	Lightolier	7142BU W/8087CCLP	
		Mounting	Recessed	Lithonia	LP8F 42TRT M VOLT GEB1 802A	
				Port-Fluor	PD7-H142E-7HC	
T-6	Recessed quartz ellipsoidal dow n light fixture, 6" opening, Medium beam distribution.	Lamp	150QZ	Prescolite	1055-ST771	
		Voltage	120	Rambusch	RD45-150Q-B	
		Mounting	Recessed	Lithonia	GQT-150M-6AR	
		Finish		Port-Incan	H7682T-1651LI	
T-7	Recessed MR16 dow n light fixture, 3" opening, Medium beam distribution. Stainless Steel trim. Adjustable head.	Lamp	MR16-35w			
		Voltage	120			
		Mounting	Recessed			
		Finish	Stainles			
T-8	Fluorescent light fixture, suitable for outside, stainless steel hardw are.	Lamp	1-42w	Kim	WF21/42PL277/SCBA	
		Voltage	277	Kenall	MR13EL-PIA-CBA-32 or 42PLT	
		Mounting	Wall	Fail-Safe	TRE15-C-142CT-DT-SCBA	
		Finish	by Arch	Exceline	PR3SW142HFL-CBA 8 E0X	
				Exceline	GXSW 42 HFL-CBA 8	
T-9	Wall mounted halide light fixture. Type III distribution.	Lamp	70W MH	Kim	WD14D3/70MH/SBA	
		Voltage	277	Lithonia	WFL2-175M-BP-277	
		Mounting	Wall	Invue	VWS-175-MH-277-3S-SCBA-PC	
		Finish	by Arch	Halo	PW2-D-SCBA-3-175H-H-B	
				Exceline	GXMW175MA-L-CBA-8	
T-10	Arm mounted on 20 ft pole, light fixture, aluminum rectilinear housing, totally w ater proof.	Lamp	250W MH	Spaulding	RCS-A-H25-H3-Q-SCBA-SSS-2D-40-1-SCBA	
		Voltage	120-277	Lithonia	KW POLE SSP20 4.0 11 CTBS DM10 BC	
		Mounting	Pole	McGRAW	CAL250MH-MT-3S-BZ-CA40-SSS4A20SF-MI	
		Finish	by Arch	Wide-Lite	AL3M250-3-277-SSQ20	
T-11	FLUORESCENT LIGHT FIXTURE, 2X4, PRISMATIC LENS.	Lamp	2F32	Columbia	ST824-332-FSA12.125-3EB8LH277	
		Voltage	277	Lithonia	2SP8G-3-32-A12-mvolt-1/3-TUBPHP	
		Mounting	Grid	Metalux	2GC8-332A.125-277V-ER81	
		Finish	White	L.A. Lighting	GHL320-4-4M-FSW-2E5H-277	
T-12	FLUORESCENT LIGHT FIXTURE, 2'x4', PARABOLIC, 45 DEGREE CUT OFF ANGLE, 27 CELL.	Lamp	3F32	Columbia	HC24-332G-LD39-S-EBBLH-277	
		Voltage	277	Lithonia	2PMOG 3 32 27 LS Mvolt 1/3 GEB10IS	
		Mounting	Surface	Metalux	2P5GX332S-MI-UNV-ER81	
		Finish	White	L.A. Lighting		
				Lightolier	ALA2G18LP332UNVH2	
T-13	FLUORESCENT DOWN LIGHT FIXTURE, SUITABLE FOR SHOWER.	Lamp	1PLT32	Prescolite	TBX-TL3	
		Voltage	277	Lightolier	1100FTU/11785H	
		Mounting	Surface	Portfolio	PD6-V142E-6VL1WB	
		Finish		Lithonia	LI6F 26/32 TRT Mvolt/6LD2	
T-14	METAL HALIDE LOW BAY LIGHT FIXTURE, TOTALLY ENCLOSED SUITABLE FOR OUTDOOR USE	Lamp	175W MH	Guth	ELP-W-1-1-1-175M-2	
		Voltage	277			
		Mounting	Surface	Lithonia (Acrylic bow l)	TXR-175M-PA22C-TB-WL	
		Finish		Lumark	MHBE-5A-175-277V-WLP	
				Wide-Lite	ILXM-175-LB22-277	
T-15	SAME AS ABOVE EXCEPT WITH QUARTZ LAMP.	Lamp	300W	Guth	ELP-W-0-1-1-300W QUARTZ-1	
		Voltage	120			
		Mounting	Surface	Lithonia (Acrylic bow l)	TXR-175M-PA22C-TB-WL-QRS	
		Finish		Lumark	INBE-5A-300-120V-WLP	
				Wide-Lite	ILXM-175-LB22-277-LQ1	
T-16	FLUORESCENT LIGHT FIXTURE 1'X4' SUITABLE FOR GYP BOARD CEILING, PROVIDE WITH FLANGE.	Lamp	2F32	Columbia	ST814-232F-FSA12.125-EB8PR277	
		Voltage	277	Lightolier	SPS1FFSVI232H2	
		Mounting	Flange	Metalux	FC8232A.125-277-ER81	
		Finish	White	Lithonia	2SP8 F 2 32 A12125 Mvolt	
T-17	SAME AS ABOVE EXCEPT 2'X4" WITH 3 LAMPS	Lamp	3F32	Columbia		
		Voltage	277	Lightolier		
		Mounting	Flange	Metalux		

LIGHT FIXTURE NOTES:
1. INSTANT START
2. PROVED FLUORESCENT LIGHT FIXTURES WITH ELECTRONIC BALLAST'S WITH MAXIMUM 10% THD
3. 4100° K TEMPERATURE, 70 CRI
4. ALL EXIT SIGNS EX-1, EX-2 AND LIGHT FIXTURES ASSIGNED FOR EGRESS ASSIGNED WITH LETTER "E" SHALL HAVE 90 MINUETS EMERGENCY BATTERY PACK.
5. 5 YEAR WARRANTY FOR BALLASTS. (ADVANCE, SYLVANIA AND UNIVERSAL ARE APPROVED)
6. PROVED SLOPE ADAPTER FOR THE LIGHT FIXTURES INSTALLED IN THE SLOPED CEILING AREAS.

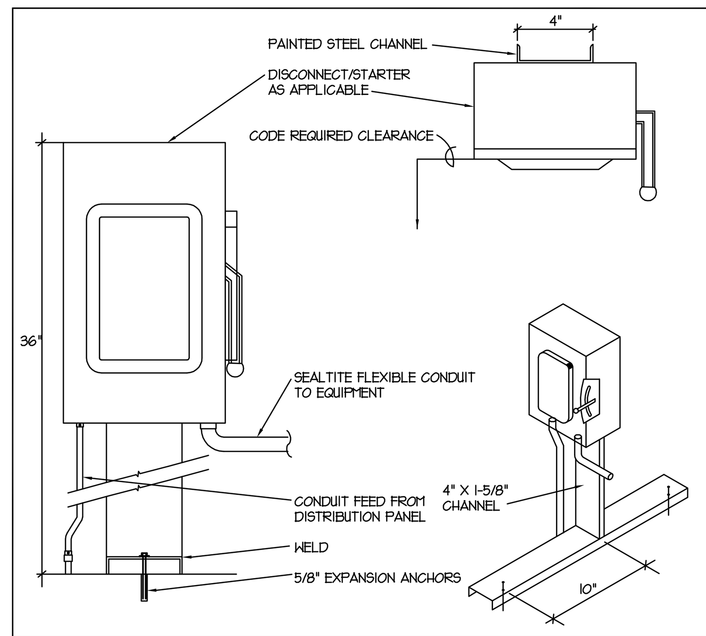

SCALE: N.T.S.

REMOTE DISCONNECT STARTER DETAIL

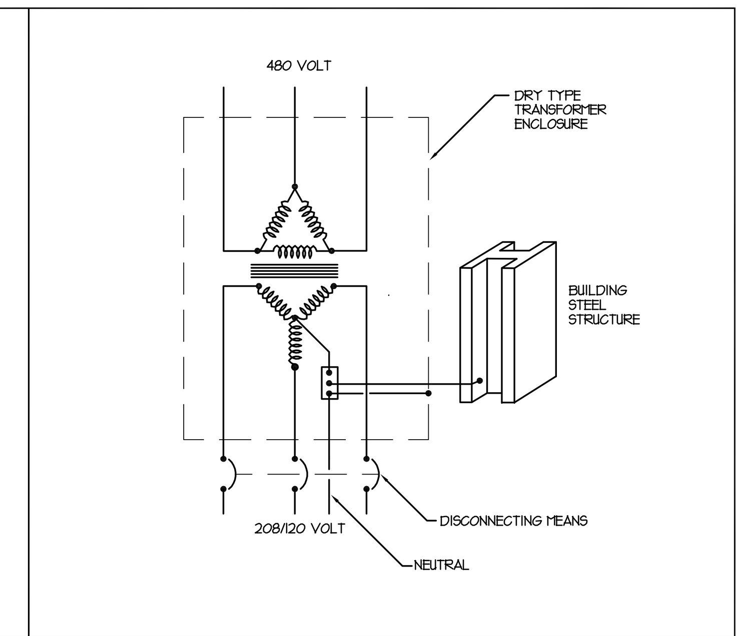

SCALE: N.T.S.

DRY TYPE TRANSFORMER GROUNDING

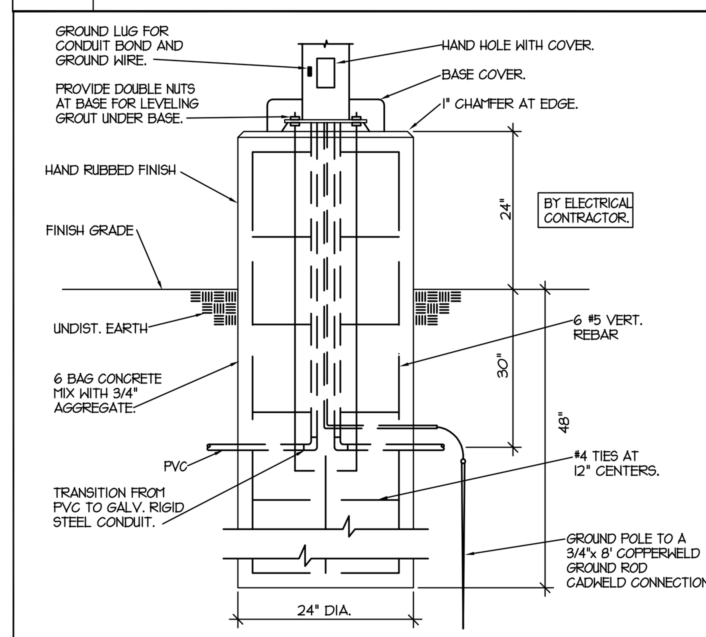

SCALE: N.T.S.

LIGHT POLE BASE DETAIL FOR LONG POLE

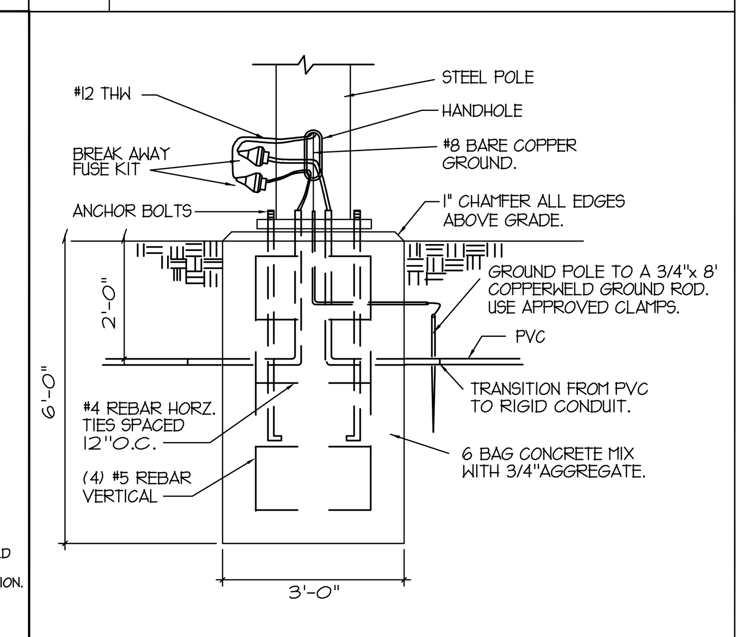

SCALE: N.T.S.

POLE BASE DETAIL FOR SHORT POLE

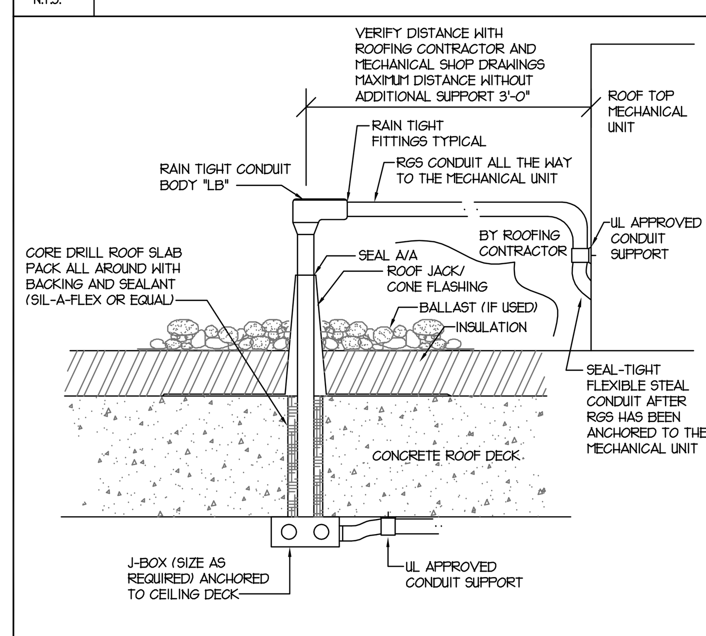

SCALE: N.T.S.

CONDUIT ROOF PENETRATION

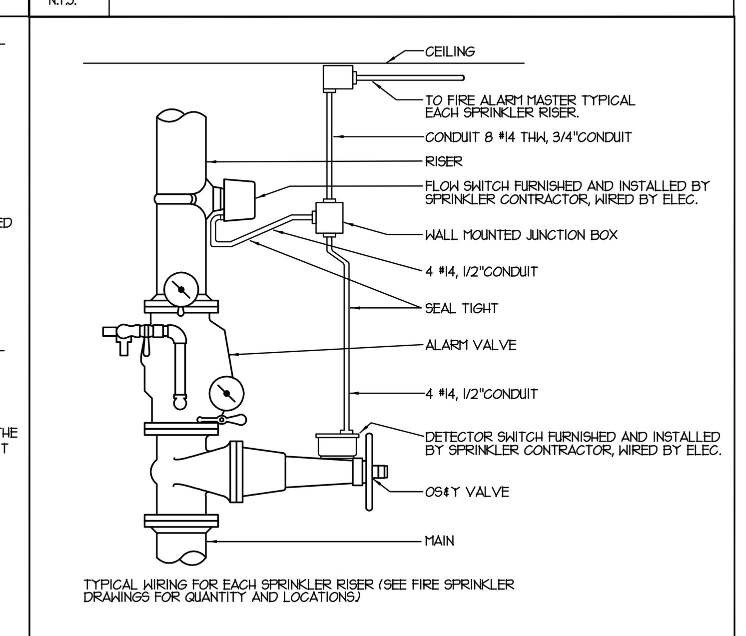

SCALE: N.T.S.

FIRE SPRINKLER CONNECTION DETAIL

POWER SYSTEMS SYMBOL LIST

SYMBOL	DESCRIPTION
	DUPLEX CONVENIENCE OUTLET - 20 AMP
	DUPLEX CONVENIENCE OUTLET - 20 AMP GROUND FAULT INTERRUPTER
	4-PLEX CONVENIENCE OUTLET - 20 AMP
	4-PLEX CONVENIENCE OUTLET - 20 AMP GROUND FAULT INTERRUPTER
EWC	DUPLEX CONVENIENCE OUTLET - 20 AMP ELECTRIC WATER COOLER
SP	SURGE PROTECTED CEILING MOUNTED DUPLEX OUTLET
J	JUNCTION BOX - SIZE AND FUNCTION AS REQUIRED
	CONDUITS CONCEALED IN FLOOR OR BELOW GRADE
	CONDUITS CONCEALED IN CEILING AND WALLS
	ARROWS INDICATE HOME RUNS - LINES INDICATE NUMBER CONDUCTORS
	NON FUSED DISCONNECT SWITCH - SIZE AS REQUIRED
	FUSED DISCONNECT SWITCH - SIZE AS REQUIRED
S	COMBINATION STARTER/FUSED DISCONNECT SWITCH - SIZE AS REQUIRED
	CIRCUIT BREAKER DISCONNECT - SIZE AS REQUIRED
	MOTOR LOCATION
$T	MANUAL DISCONNECT WITH THERMAL OVERLOAD PROTECTION
	ELECTRICAL PANEL LOCATION
M	ELECTRICAL METER LOCATION
	CABLE TRAY SYSTEM
GR	GROUND ROD
W.P.	INDICATES WEATHER PROOF EQUIPMENT
CLG	INDICATES CEILING MOUNTED DEVICE
UPS	UNINTERRUPTIBLE POWER SUPPLY
T.V.S.S.	TRANSIENT VOLTAGE SURGE SUPPRESSER
XX-1	MECHANICAL EQUIPMENT CALLOUT
X	REFERENCE NOTE CALLOUT
	WIRE MOLD, DUPLEX OUTLETS REPRESENTED BY DARK RECTANGLE

LIGHTING SYSTEMS SYMBOL LIST

SYMBOL	DESCRIPTION
J	RECESSED FLUORESCENT FIXTURE
J	SURFACE MOUNTED FLUORESCENT FIXTURE
J	FLUORESCENT STRIP LIGHT FIXTURE
	RECESSED FIXTURE
	RECESSED WALL WASHER FIXTURE
	WALL MOUNTED FIXTURE
	WALL SCONCE FIXTURE
E	FIXTURES ON EMERGENCY POWER
	EXIT LIGHT. ARROWS SHOW EXIT DIRECTION
	WALL MOUNTED LIGHT FIXTURE
	EMERGENCY BATTERY OPERATED LIGHT-SINGLE OR TWIN BEAM
	POST MOUNTED PARKING OR WALKWAY LIGHTING
	DARK ROOM LIGHT FIXTURE - THREE COMPARTMENT
$	SINGLE POLE TOGGLE SWITCH - 20 AMP
$a,b	SINGLE POLE TOGGLE SWITCH - 20 AMP, LETTERS INDICATE SWITCH ASSIGNMENT
$3	THREE WAY TOGGLE SWITCH - 20 AMP
$4	FOUR WAY TOGGLE SWITCH - 20 AMP
$P	PILOT LIGHT TOGGLE SWITCH
$K	KEYED LIGHT SWITCH
M U,I,DT	CEILING MOUNTED OCCUPANCY SENSOR - U = ULTRASONIC, I = INFRARED, DT = DUAL TECH.
M U,I,DT	WALL MOUNTED OCCUPANCY SENSOR - U = ULTRASONIC, I = INFRARED, DT = DUAL TECH.
D	SLIDE CONTROL DIMMER
PC	PHOTO CELL SENSOR - LIGHTING CONTROL SYSTEM
T-X X	LIGHTING FIXTURE CALLOUT. NUMBER INDICATES A SUGGESTED QUANTITY- TO BE VERIFIED
X	REFERENCE NOTE CALLOUT

FIRE ALARM SYSTEM SYMBOL LIST

SYMBOL	DESCRIPTION
	ELECTRICAL PANEL LOCATION
SD	FIRE ALARM PHOTOELECTRIC SMOKE DETECTOR
DD	FIRE ALARM PHOTOELECTRIC DUCT DETECTOR
H	FIRE ALARM HEAT DETECTOR
F	FIRE ALARM FLAME DETECTOR
BD A	BEAM DETECTOR TRANSMITTER - LETTER INDICATES PAIRING
BD A	BEAM DETECTOR RECEIVER - LETTER INDICATES PAIRING
F	FIRE ALARM MANUAL PULL STATION
H	FIRE ALARM HORN WITH STROBE HIGH DECIBEL
H	FIRE ALARM HORN HIGH DECIBEL
h	FIRE ALARM HORN WITH STROBE LOW DECIBEL
h	FIRE ALARM HORN LOW DECIBEL
L	A.D.A. STROBE FOR FIRE ALARM
S	FIRE ALARM SPEAKER WITH STROBE
S	FIRE ALARM SPEAKER
FS	FIRE SPRINKLER FLOW SWITCH
TS	FIRE SPRINKLER TEMPER SWITCH
PIV	FIRE ALARM POST INDICATING VALVE
DH	MAGNETIC DOOR HOLDER
FSD	FIRE/SMOKE DAMPER
FAR	FIRE ALARM RELAY
AMM	ADDRESSABLE MONITOR MODULE
F.A.C.P.	FIRE ALARM CONTROL PANEL
F.A.R.A.P.	FIRE ALARM REMOTE ANNUNCIATOR PANEL
F.A.N.E.P.	FIRE ALARM NETWORK EXPANDER PANEL
X	REFERENCE NOTE CALLOUT

COMMUNICATION SYSTEMS SYMBOL LIST

SYMBOL	DESCRIPTION
	TELEPHONE TERMINAL BOARD
	FLUSH TELEPHONE OUTLET
	FLUSH DATA/COMM OUTLET
	FLUSH FLOOR OUTLET - POWER ONLY
	FLUSH FLOOR OUTLET WITH TELE/DATA
	FLUSH POKE THROUGH OUTLET WITH TELE/DATA
TV	TELEVISION OUTLET
	CABLE TRAY SYSTEM
A	INDICATES DEVICE IS ABOVE COUNTER TOP
X	REFERENCE NOTE CALLOUT

State of Utah
Department of Administrative Services

Division of Facilities
Construction & Management

4110 State Office Building
Salt Lake City, Utah 84114
Phone: (801) 538 - 3018
Fax: (801) 538 - 3267

Internet: http://www.dfcm.state.ut.us

Utah National Guard

12953 South Minuteman Drive
Draper, Utah 84020-1726

E.C.E. INC., CONSULTING ENGINEERS
939 SO. WEST TEMPLE
SALT LAKE CITY, UTAH 84101
(801) 521-8007

BUILDING NAME:
ADMINISTRATION

PROJECT TITLE:
TASS COMPLEX
CAMP WILLIAMS
UTAH NATIONAL GUARD

MARK	DATE	DESCRIPTION

ISSUE TYPE:
Final Bid Documents

ISSUE DATE:
April 16, 2007

DFCM PROJECT NO: 95059480
CAD PROJECT NO: 2950
CAD DWG FILE:
DRAWN BY:
CHK'D BY:

COPYRIGHT: State of Utah

SHEET TITLE
ADMINISTRATION
FIXTURE SCHEDULE
& SYMBOL LIST

SHEET NUMBER
EE-6A4

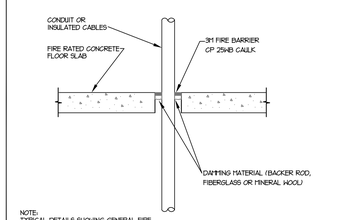

NOTE:
TYPICAL DETAILS SHOWING GENERAL FIRE STOPPING PROCEDURE. ACTUAL PROCEDURE DEPENDS UPON ANNULAR SPACE BETWEEN PIPE AND/OR INSULATION AND OPENING. FOLLOW MANUFACTURER'S INSTRUCTIONS.

SCALE: N.T.S. — TYPICAL FIRESTOP FOR CABLES/CONDUIT THROUGH CONCRETE FLOORING

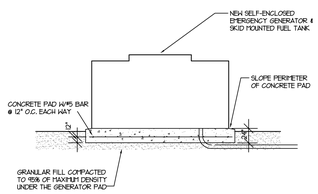

SCALE: N.T.S. — SECTION-GENERATOR PAD

GENERAL STRUCTURE NOTES - CONCRETE

A. Materials shall comply with the Standards specified in the latest edition of ACI 318, "Building Code Requirements for Reinforced Concrete".
1. Compressive strengths of concrete at 28 days shall be as follows:
a. Footings and slabs.....4,000 psi, Type II Cement.
b. All other Site Cast Concrete.....4,000 psi
2. Concrete Density: Normal weight concrete shall be approximately 145 to 155 pounds per cubic foot.
3. Reinforcement steel: Grade 60, f_y = 60,000 psi min. unless noted otherwise.
4. Admixtures: Exterior Concrete shall have 5% to 8% air entrainment.
a. Air-entraining admixtures, comply with ASTM C 260 (when used).
b. Calcium chloride shall not be added to the concrete mix.

B. Formwork shall comply with ACI Standards Publication 347 and the project specifications. The contractor shall be responsible for the design, detailing, care, placement and removal of the formwork and shores.

C. Concrete cover requirements for deformed bar reinforcing steel shall comply with ACI 318, "Building Code Requirements for Reinforced Concrete.
1. Cast-in-place Concrete. Clear. Cover
a. Cast against and permanently exposed to earth.....3"
b. Formed concrete exposed to earth or weather:
#6 thru #18 bars.....2"
#5 and small bars.....1 1/2"

D. Detailing: All reinforcing, including HHP, shall be detailed, bolstered & supported to comply with ACI 315, "Manual of Standard Practice for Detailing Reinforcing Concrete Structures" and the Concrete Reinforcing Steel Institute (CRSI) recommendations. Reinforcing bars shall not be welded unless specifically shown on drawings.
1. Lap splice lengths shall be as follows:
a. 30 bar dia. For #5 and #4 bars.
b. 40 bar dia. For #6 thru #8 bars.
c. Do not splice stirrups & ties.
d. Do not splice vertical bars in retaining walls, unless specifically shown.
2. All embedments and dowels shall be securely tied to formwork or to adjacent reinforcing prior to the placement of concrete.
3. Use chairs or other support devices recommended by the CRSI to support and tie reinforcement bars and HHP prior to placing concrete. HHP shall be continuously supported at 36" o.c. maximum.

E. No aluminum conduit or product containing aluminum or any other material injurious to concrete shall be embedded in concrete.

SCALE: N.T.S. — GENERAL STRUCTURE NOTES - CONCRETE

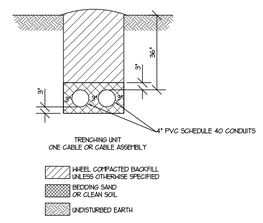

NOTES:
1. DEPTHS SPECIFIED ARE TO FINISHED GRADE.
2. OVER-EXCAVATE TRENCHES AS NECESSARY TO ALLOW FOR (a) SAND BEDDING OR (b) LOOSE AND SANDY SOIL OR (c) WHERE MORE THAN ONE CABLE HALL BE INSTALLED IN TRENCH AND LAYING OF FIRST CABLE MAY CAUSE TRENCH DAMAGE AND REDUCTION IN DEPTH.
3. SAND BEDDING IS NOT PART OF THESE UNITS AND HALL BE SPECIFIED AS NEEDED.
4. BACKFILL IS PART OF ALL TRENCHING UNITS INCLUDING JOINT-USE TRENCHES.

SCALE: N.T.S. — TRENCH DETAIL

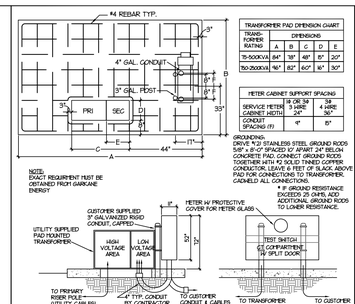

NOTE:
EXACT REQUIREMENT MUST BE OBTAINED FROM GARKANE ENERGY

TRANSFORMER PAD DIMENSION CHART					
TRANSFORMER RATING	DIMENSIONS A	B	C	D	E
75-500KVA	84"	78"	48"	15"	20"
750-2500KVA	96"	82"	60"	18"	30"

METER CABINET SUPPORT SPACING		
WIRE-PVC METER CABINET WIDTH (")	1/0 OR 3/4 3 WIRE 24"	3/4 4 WIRE 36"
CONDUIT SPACING (")	4"	8"

GROUNDING:
DRIVE 4 "X 8' STAINLESS STEEL GROUND RODS 5'-8" X 8'-0" SPACED AT APART 3'-4" BELOW FINISHED GRADE. CONNECT GROUND RODS TOGETHER WITH #2 SOLID TINNED COPPER CONDUCTOR, LEAVE 6 FEET OF SLACK ABOVE PAD FOR CONNECTIONS TO TRANSFORMER. CADWELD ALL CONNECTIONS.

* #: GROUND RESISTANCE EXCEEDS 25 OHMS. ADD ADDITIONAL GROUND RODS TO LOWER RESISTANCE.

SCALE: N.T.S. — TRANSFORMER PAD W/ CT CABINET DETAIL

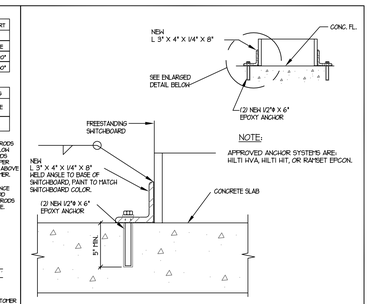

NOTE:
APPROVED ANCHOR SYSTEMS ARE: HILTI HVA, HILTI HIT, OR RAMSET EPGON.

SCALE: N.T.S. — SWITCHBOARD SEISMIC BRACING DETAIL

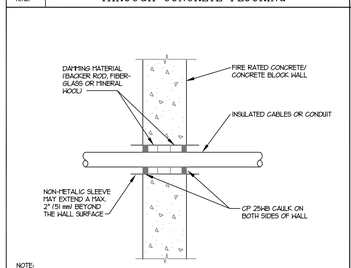

NOTE:
TYPICAL DETAILS SHOWING GENERAL FIRE STOPPING PROCEDURE. ACTUAL PROCEDURE DEPENDS UPON ANNULAR SPACE BETWEEN PIPE AND/OR INSULATION AND OPENING. FOLLOW MANUFACTURER'S INSTRUCTIONS.

SCALE: N.T.S. — TYPICAL FIRESTOP FOR CABLES/CONDUIT THROUGH CONCRETE WALLS

Type	Color of Spring	Spring rate lb/in.	Max. Load lb lbs.	Def. in inches
A	GRAY	200	300	1.5
B	TAN	400	600	1.5
C	YELLOW	670	870	1.3
D	GREEN	1000	500	1
E	RED	1560	1560	1.0
F	SILVER	2140	2140	1.0
G	BROWN	2800	2800	1.0
H	BLACK	3600	3600	1.0
K	BLK & YEL	5000	5000	1.0

NOTES:
1. Nested springs- black outer spring, yellow inner spring
2. Housings are made of welded steel.
3. All dimensions are in inches.

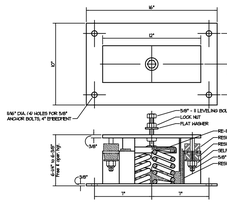

SCALE: N.T.S. — GENERATOR SEISMIC BRACING DETAIL

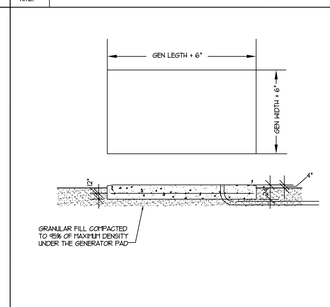

SCALE: N.T.S. — SECTION-GENERATOR PAD

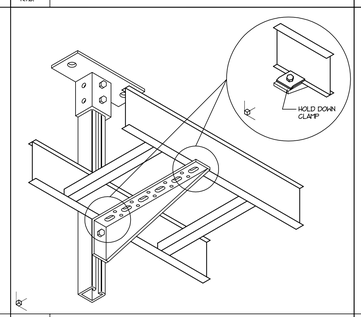

SCALE: N.T.S. — CABLE TRAY SUPPORT DETAIL

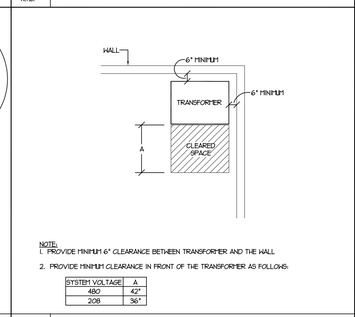

NOTE:
1. PROVIDE MINIMUM 6" CLEARANCE BETWEEN TRANSFORMER AND THE WALL
2. PROVIDE MINIMUM CLEARANCE IN FRONT OF THE TRANSFORMER AS FOLLOWS:

SYSTEM VOLTAGE	A
480	42"
208	36"

SCALE: N.T.S. — TYPICAL DRY TYPE TRANSFORMER CLEARANCE DETAIL

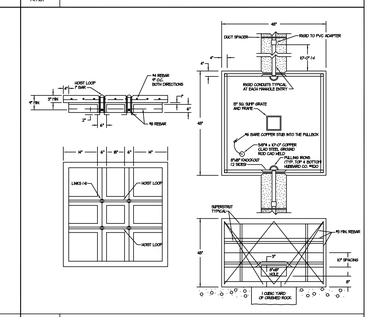

SCALE: N.T.S. — PULL BOX DETAIL

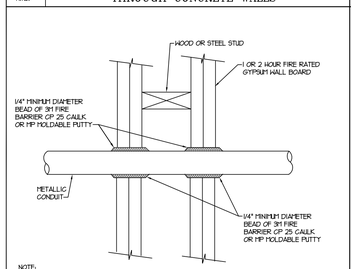

NOTE:
TYPICAL DETAILS SHOWING GENERAL FIRE STOPPING PROCEDURE. ACTUAL PROCEDURE DEPENDS UPON ANNULAR SPACE BETWEEN PIPE AND/OR INSULATION AND OPENING. FOLLOW MANUFACTURER'S INSTRUCTIONS.

SCALE: N.T.S. — FIRESTOP FOR METAL CONDUIT THROUGH GYPSUM WALL BOARD

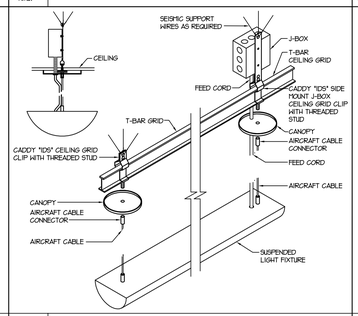

SCALE: N.T.S. — INDIRECT LIGHT FIXTURE MOUNTING DETAIL (GRID MOUNTED)

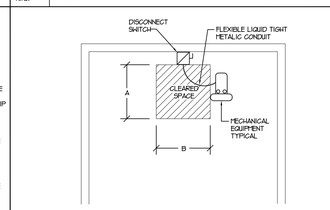

NOTE:
1. THE CONTRACTOR MUST COORDINATE EXACT LOCATION OF THE DISCONNECT WITH THE MECHANICAL CONTRACTOR TO ELIMINATE ANY OBSTACLE (PIPE, CONCRETE PAD, ETC.) IN FRONT OF THE DISCONNECT. IF THERE ARE ANY OBSTACLES, PROVIDE UNISTRUT AND INSTALL THE DISCONNECT NEXT TO MECHANICAL EQUIPMENT IN ORDER TO PROVIDE THE REQUIRED CLEARANCE.

2. PROVIDE MINIMUM CLEARANCE AS FOLLOWS:

SYSTEM VOLTAGE	A	B
480	42"	30"
208	36"	30"

SCALE: N.T.S. — TYPICAL DISCONNECT CLEARANCE REQUIREMENTS

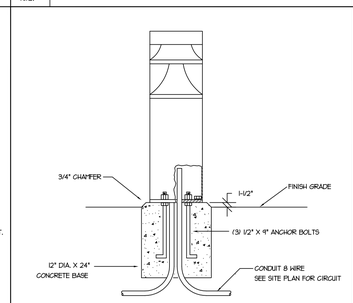

SCALE: N.T.S. — FIXTURE MOUNTING DETAIL

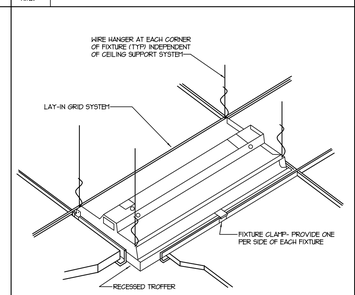

SCALE: N.T.S. — TYPICAL RECESSED FIXTURE MOUNTING DETAIL

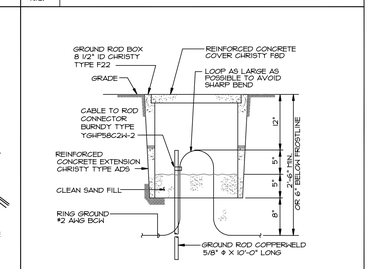

SCALE: N.T.S. — GROUND ROD ACCESS DETAIL

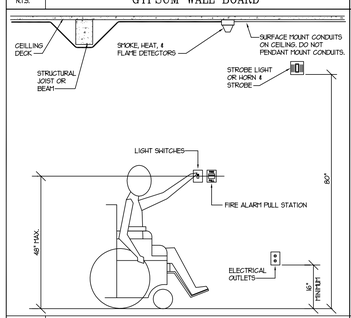

SCALE: N.T.S. — STANDARD HEIGHTS FOR HANDICAPPED ACCESS

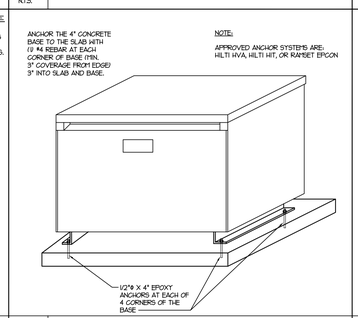

NOTE:
APPROVED ANCHOR SYSTEMS ARE: HILTI HVA, HILTI HIT, OR RAMSET EPGON

SCALE: N.T.S. — SEISMIC ANCHORING DETAIL FOR DRY TYPE TRANSFORMER

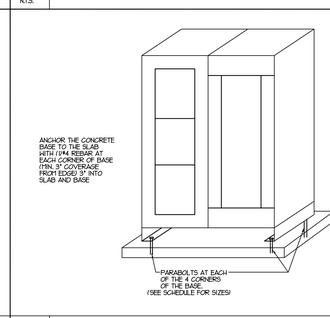

SCALE: N.T.S. — SEISMIC ANCHORING DETAIL FOR MISC. FREESTANDING FLOOR MTD. EQUIPMENT

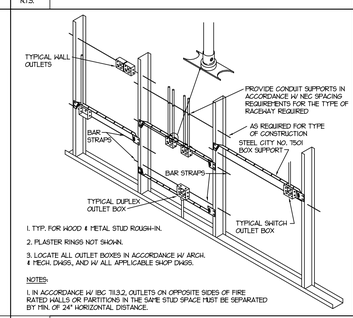

1. TYP. FOR WOOD & METAL STUD ROUGH-IN.
2. PLASTER RINGS NOT SHOWN.
3. LOCATE ALL OUTLET BOXES IN ACCORDANCE W/ ARCH. & MECH. DWGS., AND W/ ALL APPLICABLE SHOP DWGS.

NOTES:
1. IN ACCORDANCE W/ IBC 713.3.2, OUTLETS ON OPPOSITE SIDES OF FIRE RATED WALLS OR PARTITIONS IN THE SAME STUD SPACE MUST BE SEPARATED BY MIN. OF 24" HORIZONTAL DISTANCE.

SCALE: N.T.S. — TYPICAL ROUGH-IN REQUIREMENTS DETAIL

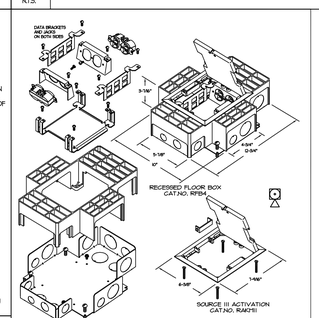

SCALE: N.T.S. — FLUSH FLOOR OUTLET DETAIL

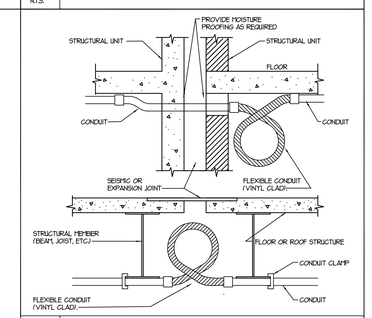

SCALE: N.T.S. — CONDUIT CROSSING SEISMIC OR EXPANSION JOINT DETAIL

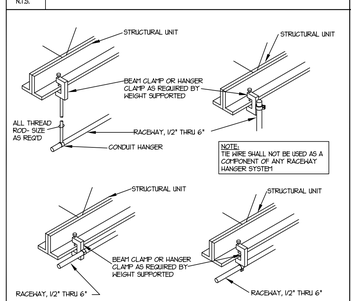

NOTE:
TIE WIRE SHALL NOT BE USED AS A COMPONENT OF ANY RACEWAY HANGER SYSTEM

SCALE: N.T.S. — TYPICAL RACEWAY SUPPORT METHODS DETAIL

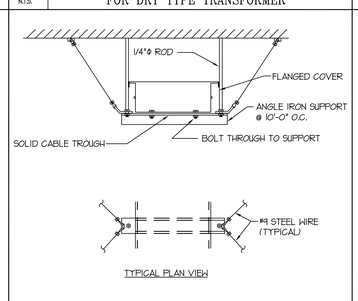

SCALE: N.T.S. — SUPPORT FOR CABLE TROUGH

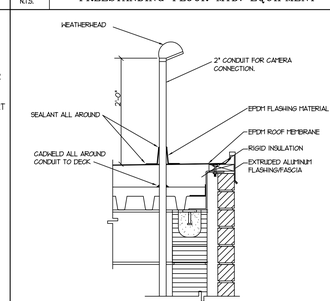

SCALE: N.T.S. — CONDUIT PENETRATION DETAIL THROUGH ROOF FOR SATELLITE TV

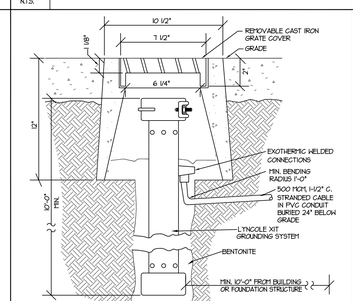

SCALE: N.T.S. — GROUNDING WELL DETAIL

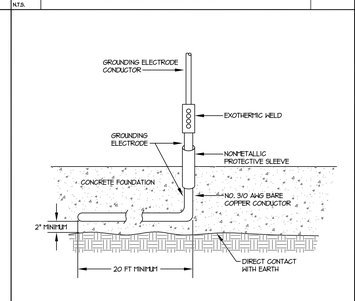

SCALE: N.T.S. — TYPICAL UFER GROUNDING DETAIL

GENERAL STRUCTURE NOTES - CONCRETE

A. Materials shall comply with the Standards specified in the latest edition of ACI 318, "Building Code Requirements for Reinforced Concrete".
1. Compressive strengths of concrete at 28 days shall be as follows:
a. Footings and slabs.....4,000 psi, Type II Cement.
b. All other Site Cast Concrete.....4,000 psi
2. Concrete Density: Normal weight concrete shall be approximately 145 to 155 pounds per cubic foot.
3. Reinforcement steel: Grade 60, f_y = 60,000 psi min. unless noted otherwise.
4. Admixtures: Exterior Concrete shall have 5% to 8% air entrainment.
a. Air-entraining admixtures, comply with ASTM C 260 (when used).
b. Calcium chloride shall not be added to the concrete mix.

B. Formwork shall comply with ACI Standards Publication 347 and the project specifications. The contractor shall be responsible for the design, detailing, care, placement and removal of the formwork and shores.

C. Concrete cover requirements for deformed bar reinforcing steel shall comply with ACI 318, "Building Code Requirements for Reinforced Concrete.
1. Cast-in-place Concrete. Clear. Cover
a. Cast against and permanently exposed to earth.....3"
b. Formed concrete exposed to earth or weather:
#6 thru #18 bars.....2"
#5 and small bars.....1 1/2"

D. Detailing: All reinforcing, including HHP, shall be detailed, bolstered & supported to comply with ACI 315, "Manual of Standard Practice for Detailing Reinforcing Concrete Structures" and the Concrete Reinforcing Steel Institute (CRSI) recommendations. Reinforcing bars shall not be welded unless specifically shown on drawings.
1. Lap splice lengths shall be as follows:
a. 30 bar dia. For #5 and #4 bars.
b. 40 bar dia. For #6 thru #8 bars.
c. Do not splice stirrups & ties.
d. Do not splice vertical bars in retaining walls, unless specifically shown.
2. All embedments and dowels shall be securely tied to formwork or to adjacent reinforcing prior to the placement of concrete.
3. Use chairs or other support devices recommended by the CRSI to support and tie reinforcement bars and HHP prior to placing concrete. HHP shall be continuously supported at 36" o.c. maximum.

E. No aluminum conduit or product containing aluminum or any other material injurious to concrete shall be embedded in concrete.

SCALE: N.T.S. — GENERAL STRUCTURE NOTES - CONCRETE

State of Utah
Department of Administrative Services

Division of Facilities Construction & Management
4110 State Office Building
Salt Lake City, Utah 84114
Phone: (801) 538 - 3018
Fax: (801) 538 - 3267
Internet: http://www.dfcm.state.ut.us

Utah National Guard
12953 South Minuteman Drive
Draper, Utah 84020-1726

E.C.E. INC., CONSULTING ENGINEERS
939 SO. WEST TEMPLE
SALT LAKE CITY, UTAH 84101
(801) 521-8007

BUILDING NAME:
ADMINISTRATION

PROJECT TITLE:
TASS COMPLEX
CAMP WILLIAMS
UTAH NATIONAL GUARD

MARK	DATE	DESCRIPTION

ISSUE TYPE:
Final Bid Documents

ISSUE DATE:
April 16, 2007

DFCM PROJECT NO: 95059480
CAD PROJECT NO: 2950
CAD DWG FILE:
DRAWN BY:
CHK'D BY: .
COPYRIGHT: State of Utah

SHEET TITLE
ADMINISTRATION DETAILS

SHEET NUMBER
EE-6A5

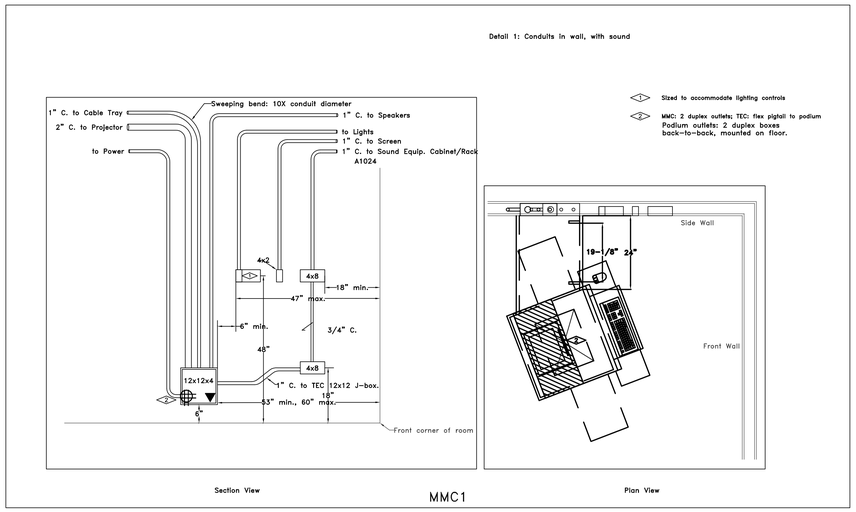

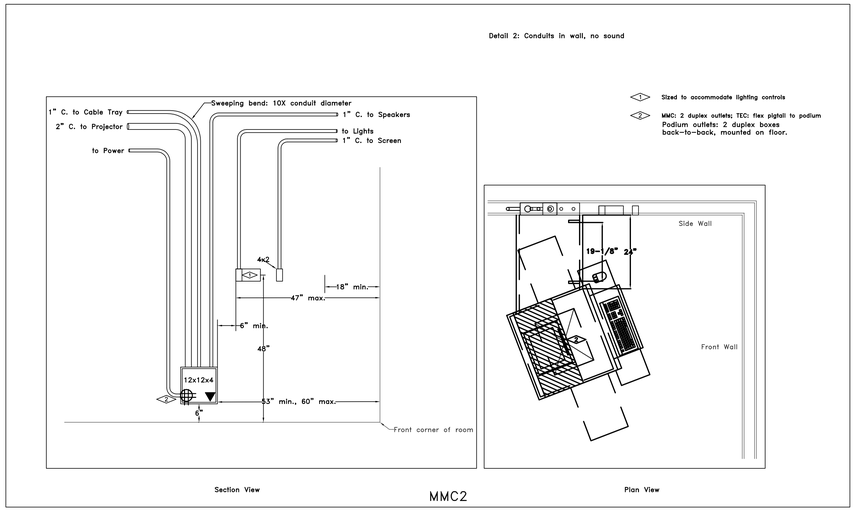

BUILDING COMMUNICATIONS MEDIA SYSTEM RACEWAY

SCALE: NOT TO SCALE

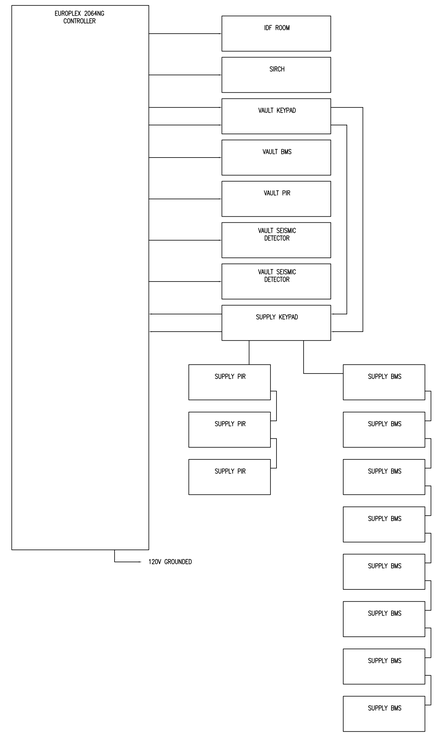

SCALE: N.T.S.	TYPICAL VAULT SECURITY SINGLE LINE DIAGRAM

State of Utah
Department of Administrative Services

Division of Facilities Construction & Management
4110 State Office Building
Salt Lake City, Utah 84114
Phone: (801) 538 - 3018
Fax: (801) 538 - 3267
Internet: http://www.dfcm.state.ut.us

Utah National Guard
12953 South Minuteman Drive
Draper, Utah 84020-1726

E.C.E. INC., CONSULTING ENGINEERS
939 SO. WEST TEMPLE
SALT LAKE CITY, UTAH 84101
(801) 521-8007

BUILDING NAME:
ADMINISTRATION

PROJECT TITLE:
TASS COMPLEX
CAMP WILLIAMS

UTAH NATIONAL GUARD

MARK	DATE	DESCRIPTION

ISSUE TYPE:
Final Bid Documents

ISSUE DATE:
April 16, 2007

DFCM PROJECT NO: 95059480
CAD PROJECT NO: 2950
CAD DWG FILE:
DRAWN BY:
CHK'D BY: .
COPYRIGHT: State of Utah

SHEET TITLE
ADMINISTRATION
COMMUNICATION
SYSTEM
VIDEO & AUDIO
MEDIA SYSTEM
SECURITIES

SHEET NUMBER
EE-6A6

PANEL HMA
PHASE/WIRE 3/4
MAIN LUG 400 AMPS
MAIN BREAKER AMPS
AIC RATING 100K AMPS
VOLTAGE 277 / 480 VOLTS

CKT	LOCATION	DO	LTG	OTHER	POLE	SIZE
1	AH-1 (VIA VFD)			52	3	90
2	AH-2			11	3	20
3	RF-1, RF-2 (VIA VFD)			4.8	3	20
4	RF-3, RF-4 (VIA VFD)			4.8	3	20
5	HWP1			11	3	20
6	HWP2			11	3	20
7	CHWP1			14	3	20
8	CHWP2			14	3	20
9	B-1, B-2			4.8	3	20
10						
11						
12						
13						
14						
15						
16						
17						
18						
19						
20						
21						
	TOTAL AMP	0	0	127.4		
	TOTAL K VA	0	0	105.921		

GRAND TOTAL KVA 105.921
SERVICE SIZE 159.25

PANEL 1LA
PHASE/WIRE 3/4
MAIN LUG 600 AMPS
MAIN BREAKER 500 AMPS
AIC RATING 22K AMPS
VOLTAGE 120 / 208 VOLTS

CKT	LOCATION	DO	LTG	OTHER	POLE	SIZE
1	PANEL "1LA1"			52.496	3	225
2	PANEL "1LA2"			52.74	3	225
3	PANEL "1LA3"			87.16	3	225
4	PANEL "1LA4"			0	3	225
5	PANEL "1LA5"			0	3	225
6	SPARE				3	100
7	SPARE				3	100
8	SPACE				3	100
9	SPACE				3	100
10	SPACE				3	100
11						
12						
13						
14						
15						
16						
17						
18						
19						
20						
21						
	TOTAL AMP	0	0	192.396		
	TOTAL K VA	0	0	69.3158		

GRAND TOTAL KVA 69.3158
SERVICE SIZE 240.495

PANEL "1LA1" — PHASE / WIRE 3 / 4 — MAIN LUG 225 AMPS — MAIN BREAKER AMPS
AIC RATING 22K AMPS — RATING 120 / 208 VOLTS — SUBFEED LUGS — COMMENT

CKT	LOCATION	RECEPT	LTG	OTHER	POLE	SIZE	PHASE	SIZE	POLE	OTHER	LTG	RECEPT	LOCATION	CKT
1	AUTOMATION NCOS A1023	400			1	20	A	20	1			200	BREAKROOM A1098	2
3	AUTOMATION NCOS A1023	800			1	20	B	20	1			200	BREAKROOM A1098	4
5	COMP STORAGE A1022	800			1	20	C	20	1			400	BREAKROOM A1098	6
7	QA A1021	1000			1	20	A	20	1			1200	BREAKROOM A1098	8
9	TCO OFFICE A1019	800			1	20	B	20	1			200	BREAKROOM A1098	10
11	TEST CTRL STOR. A1020	800			1	20	C	20	1			200	BREAKROOM A1098	12
13	OFFICE STOR. A1016	1000			1	20	A	20	1			200	BREAKROOM A1098	14
15	AO A1014	800			1	20	B	20	1			200	BREAKROOM A1098	16
17	HHD, CDR & ISR A1012	1000			1	20	C	20	1			400	LOBBY A1001	18
19	STAFF DUTY A1005	800			1	20	A	20	1			400	LOBBY A1001	20
21	REGT CSM A1006	800			1	20	B	20	1			200	LOBBY A1001	22
23	REGT CDR A1008	1000			1	20	C	20	1			800	LOBBY A1001	24
25	STORAGE A1030	1000			1	20	A	20	1	112			DCP-1 & 2	26
27	CONF. ROOM A1003	600			1	20	B	20	1				ELEC MESSAGE BOARD	28
29	CONF. ROOM A1003	800			1	20	C	20	1				SPARE	30
31	CONF. ROOM A1003	600			1	20	A	20	1				SPARE	32
33	W.R.R. A1034	200			1	20	B	20	1				SPARE	34
35	W.R.R. A1034	200			1	20	C	20	1				SPARE	36
37	W.R.R. A1034	200			1	20	A	20	1				SPARE	38
39	M.R.R. A1028	600			1	20	B	20	1				SPARE	40
41	SPARE				1	20	C	20	1				SPARE	42

VA	VA	VA		AMPS		KVA		VA	VA	VA
5000	0	0	A	59.27	A	7.112	A	112	0	2000
4600	0	0	B	45	B	5.4	B	0	0	800
4600	0	0	C	53.33	C	6.4	C	0	0	1800
14200	0	0		52.5	TOTAL	18.91		112	0	4600

PANEL "1LA2" — PHASE / WIRE 3 / 4 — MAIN LUG 225 AMPS — MAIN BREAKER AMPS
AIC RATING 22K AMPS — RATING 120 / 208 VOLTS — SUBFEED LUGS — COMMENT

CKT	LOCATION	RECEPT	LTG	OTHER	POLE	SIZE	PHASE	SIZE	POLE	OTHER	LTG	RECEPT	LOCATION	CKT
1	1ST BN CMDT A1108	800			1	20	A	20	1			1400	CORRIDOR C.O.	2
3	1ST BN OPS SGT A1109	800			1	20	B	20	1			1200	CORRIDOR C.O.	4
5	OPEN OFFICE A1104	1000			1	20	C	20	1			1000	CORRIDOR C.O.	6
7	ASSIST. CMDT A1105	600			1	20	A	20	1			200	W.R. A1091	8
9	S1 OFFICE A1103	800			1	20	B	20	1			200	W.R. A1091	10
11	S1 OFFICE A1102	800			1	20	C	20	1			200	W.R. A1091	12
13	S1 OPEN OFFICE A1100	1200			1	20	A	20	1			800	M.R. A1026	14
15	S1 OFFICE A1101	800			1	20	B	20	1			200	LATRINE A1087	16
17	EXAM ROOM A1088	1000			1	20	C	20	1			400	EWC & CUSTODIAN	18
19	BREAKROOM A1089	600			1	20	A	20	1			400	ELEV. CONTROL ROOM	20
21	BREAKROOM A1089	400			1	20	B	20	1			400	VAULT A1068	22
23	BREAKROOM A1089	200			1	20	C	20	1				SPARE	24
25	BREAKROOM A1089	400			1	20	A	20	1				SPARE	26
27	BREAKROOM A1089	200			1	20	B	20	1				SPARE	28
29	MEDICS A1086	1400			1	20	C	20	1				SPARE	30
31	MAIL A1083/STORAGE A1084	600			1	20	A	20	1				SPARE	32
33	BILLETING A1082	1000			1	20	B	20	1				SPARE	34
35	SPARE				1	20	C	20	1				SPARE	36
37	SPARE				1	20	A	20	1				SPARE	38
39	SPARE				1	20	B	20	1				SPARE	40
41	SPARE				1	20	C	20	1				SPARE	42

VA	VA	VA		AMPS		KVA		VA	VA	VA
4200	0	0	A	58.33	A	7	A	0	0	2800
4000	0	0	B	50	B	6	B	0	0	2000
4400	0	0	C	50	C	6	C	0	0	1600
12600	0	0		52.74	TOTAL	19		0	0	6400

PANEL "1LA3" — PHASE / WIRE 3 / 4 — MAIN LUG 225 AMPS — MAIN BREAKER AMPS
AIC RATING 22K AMPS — RATING 120 / 208 VOLTS — SUBFEED LUGS — COMMENT

CKT	LOCATION	RECEPT	LTG	OTHER	POLE	SIZE	PHASE	SIZE	POLE	OTHER	LTG	RECEPT	LOCATION	CKT
1	CA BRANCH CHIEF A1054	800			1	20	A	20	1			1200	RECEIVING A1075	2
3	TNG CO BR. CHIEF A1053	1000			1	20	B	20	1			200	RECEIVING A1075	4
5	CA TNG CO A1056	1000			1	20	C	20	1			1000	SUPPLY STOR. A1078	6
7	LDR TNG CO A1057	800			1	20	A	20	1			1000	SUPPLY NCO'S A1074	8
9	OCS STAFF A1058	800			1	20	B	20	1			1000	S4/PBO A1071	10
11	OCS CDR A1059	600			1	20	C	20	1			600	STUDENT ADMIN. A1063	12
13	2ND BN NCOIC A1049	800			1	20	A	20	1			800	STUDENT ADMIN. A1063	14
15	2ND BN CDR A1047	800			1	20	B	20	1			800	OPS SGT A1065	16
17	CLASSROOM A1043	1000			1	20	C	20	1			800	STORAGE A1069	18
19	2ND BN OPS SGT A1046	800			1	20	A	20	1			800	OPS SGM A1064	20
21	STORAGE A1038	1000			1	20	B	20	1			1000	WORK AREA A1066	22
23	CORRIDOR C.O.	1200			1	20	C	20	1			800	S3 A1067	24
25	CORRIDOR C.O.	1200			1	20	A	20	1			1600	ISSUE/RECEIVING A1079	26
27	CORRIDOR C.O.	1400			1	20	B	20	1			400	MULTI PURPOSE	28
29	CLASSROOM A1060	600			1	20	C	20	1			600	MULTI PURPOSE	30
31	MECH. RM. OUTLETS	1000			1	20	A	20	1			400	MULTI PURPOSE	32
33	MOTORIZED DAMPERS			200	1	20	B	20	1			600	MULTI PURPOSE	34
35	CCP-1			200	1	20	C	20	1			1400	CLASSROOM A1061	36
37	UNIT HEATER			200	1	20	A	20	1				SPARE	38
39	DOOR OPENER			1000	1	20	B	20	1				SPARE	40
41	SPARE				1	20	C	20	1				SPARE	42

VA	VA	VA		AMPS		KVA		VA	VA	VA
5400	0	200	A	95	A	11.4	A	0	0	5800
5000	0	1200	B	85	B	10.2	B	0	0	4000
4400	0	200	C	81.67	C	9.8	C	0	0	5200
14800	0	1600		87.16	TOTAL	31.4		0	0	15000

PANEL HMDPA
PHASE/WIRE 3/4
MAIN LUG 1600 AMPS
MAIN BREAKER 1600 AMPS
AIC RATING 100K AMPS
VOLTAGE 277 / 480 VOLTS

CKT	LOCATION	DO	LTG	OTHER	POLE	SIZE
1	150 KVA TRANSFORMER			180.5	3	225
2	150 KVA TRANSFORMER			180.5	3	225
3	1HMA			34.21	3	225
4	2HMA			30.709	3	225
5	HMA			127.4	3	225
6	ELEVATOR			34	3	100
7						
8						
9						
10						
11						
12						
13						
14						
15						
16						
17						
18						
19						
20						
21						
	TOTAL AMP	0	0	587.319		
	TOTAL K VA	0	0	488.302		

GRAND TOTAL KVA 488.302
SERVICE SIZE 734.149

PANEL 2LA
PHASE/WIRE 3/4
MAIN LUG 600 AMPS
MAIN BREAKER 500 AMPS
AIC RATING 22K AMPS
VOLTAGE 120 / 208 VOLTS

CKT	LOCATION	DO	LTG	OTHER	POLE	SIZE
1	PANEL "2LA1"			39.972	3	225
2	PANEL "2LA2"			40.527	3	225
3	PANEL "2LA3"			63.288	3	225
4	PANEL "2LA4"			47.744	3	225
5	PANEL "2LA5"			0	3	225
6	SPARE				3	100
7	SPARE				3	100
8	SPACE				3	100
9	SPACE				3	100
10	SPACE				3	100
11						
12						
13						
14						
15						
16						
17						
18						
19						
20						
21						
	TOTAL AMP	0	0	191.531		
	TOTAL K VA	0	0	69.0042		

GRAND TOTAL KVA 69.0042
SERVICE SIZE 239.414

PANEL "1LA4" — PHASE / WIRE 3 / 4 — MAIN LUG 225 AMPS — MAIN BREAKER AMPS
AIC RATING 22K AMPS — RATING 120 / 208 VOLTS — SUBFEED LUGS — COMMENT

CKT	LOCATION	RECEPT	LTG	OTHER	POLE	SIZE	PHASE	SIZE	POLE	OTHER	LTG	RECEPT	LOCATION	CKT
1	SPARE				1	20	A	20	1				SPARE	2
3	SPARE				1	20	B	20	1				SPARE	4
5	SPARE				1	20	C	20	1				SPARE	6
7	SPARE				1	20	A	20	1				SPARE	8
9	SPARE				1	20	B	20	1				SPARE	10
11	SPARE				1	20	C	20	1				SPARE	12
13	SPARE				1	20	A	20	1				SPARE	14
15	SPARE				1	20	B	20	1				SPARE	16
17	SPARE				1	20	C	20	1				SPARE	18
19	SPARE				1	20	A	20	1				SPARE	20
21	SPARE				1	20	B	20	1				SPARE	22
23	SPARE				1	20	C	20	1				SPARE	24
25	SPARE				1	20	A	20	1				SPARE	26
27	SPARE				1	20	B	20	1				SPARE	28
29	SPARE				1	20	C	20	1				SPARE	30
31	SPARE				1	20	A	20	1				SPARE	32
33	SPARE				1	20	B	20	1				SPARE	34
35	SPARE				1	20	C	20	1				SPARE	36
37	SPARE				1	20	A	20	1				SPARE	38
39	SPARE				1	20	B	20	1				SPARE	40
41	SPARE				1	20	C	20	1				SPARE	42

VA	VA	VA		AMPS		KVA		VA	VA	VA
0	0	0	A	0	A	0	A	0	0	0
0	0	0	B	0	B	0	B	0	0	0
0	0	0	C	0	C	0	C	0	0	0
0	0	0		0	TOTAL	0		0	0	0

PANEL "2LA1" — PHASE / WIRE 3 / 4 — MAIN LUG 225 AMPS — MAIN BREAKER AMPS
AIC RATING 22K AMPS — RATING 120 / 208 VOLTS — SUBFEED LUGS — COMMENT

CKT	LOCATION	RECEPT	LTG	OTHER	POLE	SIZE	PHASE	SIZE	POLE	OTHER	LTG	RECEPT	LOCATION	CKT
1	BREAKROOM A2016	200			1	20	A	20	1			600	PLDC SGL A2006	2
3	BREAKROOM A2016	200			1	20	B	20	1			600	PLDC SGL A2007	4
5	BREAKROOM A2016	200			1	20	C	20	1			600	PLDC SGL A2005	6
7	BREAKROOM A2016	200			1	20	A	20	1			200	STORAGE A2004	8
9	BREAKROOM A2016	200			1	20	B	20	1				SPARE	10
11	BREAKROOM A2016	800			1	20	C	20	1			400	CORRIDOR	12
13	BREAKROOM A2016	200			1	20	A	20	1			400	CORRIDOR	14
15	BREAKROOM A2016	200			1	20	B	20	1			200	CORRIDOR	16
17	PLDC SGL A2015	800			1	20	C	20	1			400	STOR. A2002	18
19	PLDC SGL A2013	800			1	20	A	20	1			600	OUTDOOR PATIO A2018	20
21	CLASSROOM A2011	800			1	20	B	20	1			800	AV A2019/STAIRS A2020	22
23	CLASSROOM A2011	600			1	20	C	20	1				SPARE	24
25	CLASSROOM A2011	1200			1	20	A	20	1				SPARE	26
27	CLASSROOM A2009	800			1	20	B	20	1				SPARE	28
29	CLASSROOM A2009	600			1	20	C	20	1				SPARE	30
31	CLASSROOM A2009	1200			1	20	A	20	1				SPARE	32
33	MECHANICAL A2021	600			1	20	B	20	1				SPARE	34
35	SPARE				1	20	C	20	1				SPARE	36
37	SPARE				1	20	A	20	1				SPARE	38
39	SPARE				1	20	B	20	1				SPARE	40
41	SPARE				1	20	C	20	1				SPARE	42

VA	VA	VA		AMPS		KVA		VA	VA	VA
3800	0	0	A	46.67	A	5.6	A	0	0	1800
2800	0	0	B	36.67	B	4.4	B	0	0	1600
3000	0	0	C	36.67	C	4.4	C	0	0	1400
9600	0	0		39.97	TOTAL	14.4		0	0	4800

PANEL "2LA2" — PHASE / WIRE 3 / 4 — MAIN LUG 225 AMPS — MAIN BREAKER AMPS
AIC RATING 22K AMPS — RATING 120 / 208 VOLTS — SUBFEED LUGS — COMMENT

CKT	LOCATION	RECEPT	LTG	OTHER	POLE	SIZE	PHASE	SIZE	POLE	OTHER	LTG	RECEPT	LOCATION	CKT
1	PLDC BRCH CHIEF A2095	600			1	20	A	20	1			600	PLDC SSGL A2071	2
3	PLDC SSGL A2096	600			1	20	B	20	1			600	PLDC SSGL A2070	4
5	PLDC SGL A2094	800			1	20	C	20	1			800	SGL A2069	6
7	PLDC SGL A2093	600			1	20	A	20	1				SPARE	8
9	CLASSROOM A2089	1000			1	20	B	20	1				SPARE	10
11	CLASSROOM A2089	800			1	20	C	20	1				SPARE	12
13	CLASSROOM A2089	1200			1	20	A	20	1				SPARE	14
15	CLASSROOM A2084	1000			1	20	B	20	1				SPARE	16
17	CLASSROOM A2084	800			1	20	C	20	1				SPARE	18
19	CLASSROOM A2084	1200			1	20	A	20	1				SPARE	20
21	PLDC SGL A2073	600			1	20	B	20	1				SPARE	22
23	PLDC SGL A2072	800			1	20	C	20	1				SPARE	24
25	BREAKROOM A2087	200			1	20	A	20	1				SPARE	26
27	BREAKROOM A2087	600			1	20	B	20	1				SPARE	28
29	BREAKROOM A2087	200			1	20	C	20	1				SPARE	30
31	BREAKROOM A2087	200			1	20	A	20	1				SPARE	32
33	BREAKROOM A2087	400			1	20	B	20	1				SPARE	34
35	BREAKROOM A2087	200			1	20	C	20	1				SPARE	36
37	BREAKROOM A2087	400			1	20	A	20	1				SPARE	38
39	BREAKROOM A2087	200			1	20	B	20	1				SPARE	40
41	BREAKROOM A2087	200			1	20	C	20	1				SPARE	42

VA	VA	VA		AMPS		KVA		VA	VA	VA
4400	0	0	A	41.67	A	5	A	0	0	600
4400	0	0	B	41.67	B	5	B	0	0	600
3800	0	0	C	38.33	C	4.6	C	0	0	800
12600	0	0		40.53	TOTAL	14.6		0	0	2000

PANEL "1EHA" — PHASE / WIRE 3 / 4 — MAIN LUG 100 AMPS — MAIN BREAKER AMPS
AIC RATING 22K AMPS — RATING 277 / 480 VOLTS — SUBFEED LUGS — COMMENT

CKT	LOCATION	RECEPT	LTG	OTHER	POLE	SIZE	PHASE	SIZE	POLE	OTHER	LTG	RECEPT	LOCATION	CKT
1	SECOND LEVEL E-LTS		2160		1	20	A	20	1				SPARE	2
3	SECOND LEVEL E-LTS		1700		1	20	B	20	1				SPARE	4
5	FIRST LEVEL E-LTS		2140		1	20	C	20	1				SPARE	6
7	FIRST LEVEL E-LTS		2420		1	20	A	[redacted]		15000	[redacted]			8
9	SPARE				1	20	B	[redacted]		15000	[redacted]			10
11	SPARE				1	20	C	70	3	15000			TRANSFORMER 45KVA	12

VA	VA	VA		AMPS		KVA		VA	VA	VA
0	4580	0	A	70.69	A	19.58	A	15000	0	0
0	1700	0	B	60.29	B	16.7	B	15000	0	0
0	2140	0	C	61.88	C	17.14	C	15000	0	0
0	8420	0		64.26	TOTAL	53.42		45000	0	0

PANEL "2LA3" — PHASE / WIRE 3 / 4 — MAIN LUG 225 AMPS — MAIN BREAKER AMPS
AIC RATING 22K AMPS — RATING 120 / 208 VOLTS — SUBFEED LUGS — COMMENT

CKT	LOCATION	RECEPT	LTG	OTHER	POLE	SIZE	PHASE	SIZE	POLE	OTHER	LTG	RECEPT	LOCATION	CKT
1	CLASSROOM A2036	800			1	20	A	20	1			1000	CLASSROOM A2026	2
3	CLASSROOM A2036	1000			1	20	B	20	1			800	CLASSROOM A2026	4
5	CLASSROOM A2036	1200			1	20	C	20	1			1200	CLASSROOM A2026	6
7	BNOC SGL A2041	600			1	20	A	20	1			600	BNOC SGL A2025	8
9	BNOC SGL A2042	800			1	20	B	20	1			600	BNOC SGL A2023	10
11	BNOC SGL A2043	600			1	20	C	20	1			800	CORRIDOR	12
13	CLASSROOM A2044	1000			1	20	A	20	1			600	CORRIDOR	14
15	CLASSROOM A2044	800			1	20	B	20	1			800	CORRIDOR	16
17	CLASSROOM A2044	1200			1	20	C	20	1				SPARE	18
19	CLASSROOM A2045	800			1	20	A	20	1				SPARE	20
21	CLASSROOM A2045	800			1	20	B	20	1				SPARE	22
23	CLASSROOM A2045	1200			1	20	C	20	1				SPARE	24
25	BNOC SSGL A2033	800			1	20	A	20	1				SPARE	26
27	BNOC SGL A2029	600			1	20	B	20	1				SPARE	28
29	BNOC BRCH CHIEF A2032	1000			1	20	C	20	1				SPARE	30
31	CLASSROOM A2028	800			1	20	A	20	1				SPARE	32
33	CLASSROOM A2028	1000			1	20	B	20	1				SPARE	34
35	CLASSROOM A2028	1200			1	20	C	20	1				SPARE	36
37	STOR. A2022	200			1	20	A	20	1				SPARE	38
39	SPARE				1	20	B	20	1				SPARE	40
41	SPARE				1	20	C	20	1				SPARE	42

VA	VA	VA		AMPS		KVA		VA	VA	VA
5000	0	0	A	60	A	7.2	A	0	0	2200
5000	0	0	B	60	B	7.2	B	0	0	2200
6400	0	0	C	70	C	8.4	C	0	0	2000
16400	0	0		63.29	TOTAL	22.8		0	0	6400

PANEL "2LA4" — PHASE / WIRE 3 / 4 — MAIN LUG 225 AMPS — MAIN BREAKER AMPS
AIC RATING 22K AMPS — RATING 120 / 208 VOLTS — SUBFEED LUGS — COMMENT

CKT	LOCATION	RECEPT	LTG	OTHER	POLE	SIZE	PHASE	SIZE	POLE	OTHER	LTG	RECEPT	LOCATION	CKT
1	PLDC SGL A2047	600			1	20	A	20	1			400	CLASSROOM A2057	2
3	PLDC SGL A2048	600			1	20	B	20	1			400	CLASSROOM A2057	4
5	PLDC SGL A2049	600			1	20	C	20	1			1200	CLASSROOM A2057	6
7	PLDC SGL A2050	600			1	20	A	20	1			400	CLASSROOM A2058	8
9	PLDC SGL A2065	600			1	20	B	20	1			400	CLASSROOM A2058	10
11	PLDC SGL A2064	600			1	20	C	20	1			1200	CLASSROOM A2058	12
13	PLDC SGL A2062	600			1	20	A	20	1			600	CORRIDOR	14
15	PLDC SGL A2061	600			1	20	B	20	1			600	CORRIDOR	16
17	CLASSROOM A2053	400			1	20	C	20	1			800	CORRIDOR	18
19	CLASSROOM A2053	400			1	20	A	20	1			200	STOR. A2019	20
21	CLASSROOM A2053	1200			1	20	B	20	1			200	STOR. A2074	22
23	CLASSROOM A2051	400			1	20	C	20	1			200	CUSTODIAL A2028	24
25	CLASSROOM A2051	400			1	20	A	20	1			200	STOR. A2079	26
27	CLASSROOM A2051	1200			1	20	B	20	1			200	STOR. A2077	28
29	WRR A2080	200			1	20	C	20	1				SPARE	30
31	WRR A2080	200			1	20	A	20	1				SPARE	32
33	WRR A2080	200			1	20	B	20	1				SPARE	34
35	MR A2083	800			1	20	C	20	1				SPARE	36
37	SPARE				1	20	A	20	1				SPARE	38
39	SPARE				1	20	B	20	1				SPARE	40
41	SPARE				1	20	C	20	1				SPARE	42

VA	VA	VA		AMPS		KVA		VA	VA	VA
2800	0	0	A	38.33	A	4.6	A	0	0	1800
4400	0	0	B	51.67	B	6.2	B	0	0	1800
3000	0	0	C	53.33	C	6.4	C	0	0	3400
10200	0	0		47.74	TOTAL	17.2		0	0	7000

PANEL "1ELA" — PHASE / WIRE 3 / 4 — MAIN LUG 200 AMPS — MAIN BREAKER 150 AMPS
AIC RATING 22K AMPS — RATING 120 / 208 VOLTS — SUBFEED LUGS — COMMENT

CKT	LOCATION	RECEPT	LTG	OTHER	POLE	SIZE	PHASE	SIZE	POLE	OTHER	LTG	RECEPT	LOCATION	CKT
1	FIRE ALARM	200			1	20	A	20	1			400	A1061 C.O.	2
3	SECURITY	200			1	20	B	20	1			600	A1061 O.H.P.	4
5	A2036	400			1	20	C	20	1			600	CLASSROOM A1056,57,58	6
7	A2044	400			1	20	A	20	1			400	CLASSROOM A1043	8
9	A2045	400			1	20	B	20	1			400	CLASSROOM A1060	10
11	A2028	400			1	20	C	20	1			1400	A1061	12
13	A2026	400			1	20	A	20	1			1400	A1061	14
15	A2053	400			1	20	B	20	1			1400	A1061	16
17	A2056	400			1	20	C	20	1			1400	A1061	18
19	A2051	400			1	20	A	20	1				CLASSROOM A1060	20
21	A2058	400			1	20	B	20	1	3000			ELEVATOR	22
23	A2011	400			1	20	C	20	1				SPARE	24
25	A2009	400			1	20	A	[redacted]			[redacted]			26
27	A2084	400			1	20	B	[redacted]			[redacted]			28
29	A2089	400			1	20	C	70	3				UPS EXT. BY-PASS	30
31	COM ROOM A1025	600			1	20	A	[redacted]			[redacted]			32
33	DOOR OPENER				1	20	B	[redacted]			[redacted]			34
35	SPARE				1	20	C	70	3				UPS INTERIOR BY-PASS	36
37	SPARE				1	20	A	[redacted]			[redacted]			38
39	SPARE				1	20	B	[redacted]			[redacted]			40
41	SPARE				1	20	C	70	3				UPS INVERTER	42

VA	VA	VA		AMPS		KVA		VA	VA	VA
2400	0	0	A	38.33	A	4.6	A	0	0	2200
1800	0	0	B	60	B	7.2	B	3000	0	2400
2000	0	0	C	45	C	5.4	C	0	0	3400
6200	0	0		47.74	TOTAL	17.2		3000	0	8000

PANEL LUPSA — PHASE / WIRE 3 / 4 — MAIN LUG 100 AMPS — MAIN BREAKER 70 AMPS
AIC RATING 10K AMPS — RATING 120 / 208 VOLTS — SUBFEED LUGS YES — COMMENT IG

CKT	LOCATION	RECEPT	LTG	OTHER	POLE	SIZE	PHASE	SIZE	POLE	OTHER	LTG	RECEPT	LOCATION	CKT
1	TELECOM A1024	1200			1	20	A	20	1	200			VAULT	2
3	TELECOM A1024	1200			1	20	B	20	1				SPARE	4
5	TELECOM A1024	1200			1	20	C	20	1				SPARE	6
7	TELECOM A1024	400			1	20	A	20	1				SPARE	8
9	TELECOM A1024	400			1	20	B	20	1				SPARE	10
11	SPARE				1	20	C	20	1				SPARE	12
13	SPARE				1	20	A	20	1				SPARE	14
15	SPARE				1	20	B	20	1				SPARE	16
17	SPARE				1	20	C	20	1				SPARE	18
19	SPARE				1	20	A	20	1				SPARE	20
21	SPARE				1	20	B	20	1				SPARE	22
23	SPARE				1	20	C	20	1				SPARE	24
25	SPARE				1	20	A	20	1				SPARE	26
27	SPARE				1	20	B	20	1				SPARE	28
29	SPARE				1	20	C	20	1				SPARE	30
31	SPARE				1	20	A	20	1				SPARE	32
33	SPARE				1	20	B	20	1				SPARE	34
35	SPARE				1	20	C	20	1				SPARE	36
37	SPARE				1	20	A	20	1				SPARE	38
39	SPARE				1	20	B	20	1				SPARE	40
41	SPARE				1	20	C	20	1				SPARE	42

VA	VA	VA		AMPS		KVA		VA	VA	VA
1600	0	0	A	15	A	1.8	A	200	0	0
1600	0	0	B	13.33	B	1.6	B	0	0	0
1200	0	0	C	10	C	1.2	C	0	0	0
4400	0	0		12.77	TOTAL	4.6		200	0	0

PANEL LUPSB — PHASE / WIRE 3 / 4 — MAIN LUG 100 AMPS — MAIN BREAKER 70 AMPS
AIC RATING 10K AMPS — RATING 120 / 208 VOLTS — SUBFEED LUGS — COMMENT IG

CKT	LOCATION	RECEPT	LTG	OTHER	POLE	SIZE	PHASE	SIZE	POLE	OTHER	LTG	RECEPT	LOCATION	CKT
1	IDF A2017	1400			1	20	A	20	1				SPARE	2
3	IDF A2017	1400			1	20	B	20	1				SPARE	4
5	IDF A2017	1200			1	20	C	20	1				SPARE	6
7	IDF A2017	400			1	20	A	20	1				SPARE	8
9	IDF A2017	400			1	20	B	20	1				SPARE	10
11	SPARE				1	20	C	20	1				SPARE	12
13	SPARE				1	20	A	20	1				SPARE	14
15	SPARE				1	20	B	20	1				SPARE	16
17	SPARE				1	20	C	20	1				SPARE	18
19	SPARE				1	20	A	20	1				SPARE	20
21	SPARE				1	20	B	20	1				SPARE	22
23	SPARE				1	20	C	20	1				SPARE	24
25	SPARE				1	20	A	20	1				SPARE	26
27	SPARE				1	20	B	20	1				SPARE	28
29	SPARE				1	20	C	20	1				SPARE	30
31	SPARE				1	20	A	20	1				SPARE	32
33	SPARE				1	20	B	20	1				SPARE	34
35	SPARE				1	20	C	20	1				SPARE	36
37	SPARE				1	20	A	20	1				SPARE	38
39	SPARE				1	20	B	20	1				SPARE	40
41	SPARE				1	20	C	20	1				SPARE	42

VA	VA	VA		AMPS		KVA		VA	VA	VA
1800	0	0	A	15	A	1.8	A	0	0	0
1800	0	0	B	15	B	1.8	B	0	0	0
1200	0	0	C	10	C	1.2	C	0	0	0
4800	0	0		13.32	TOTAL	4.8		0	0	0

PANEL "1HMA" — PHASE / WIRE 3 / 4 — MAIN LUG 225 AMPS — MAIN BREAKER AMPS
AIC RATING 22K AMPS — RATING 277 / 480 VOLTS — SUBFEED LUGS — COMMENT

CKT	LOCATION	RECEPT	LTG	OTHER	POLE	SIZE	PHASE	SIZE	POLE	OTHER	LTG	RECEPT	LOCATION	CKT
1	SOUTH WEST LTS		2200		1	20	A	20	1		1500		OUTDOOR LTS	2
3	SOUTH WEST LTS		2605		1	20	B	20	1		1200		OUTDOOR LTS	4
5	NORTH WEST LTS		2240		1	20	C	20	1				SPARE	6
7	NORTH WEST LTS		2200		1	20	A	20	1				SPARE	8
9	NORTH LTS		2670		1	20	B	20	1				SPARE	10
11	NORTH WEST LTS		2440		1	20	C	20	1				SPARE	12
13	EAST LTS		3830		1	20	A	20	1				SPARE	14
15	SOUTH EAST LTS		1665		1	20	B	20	1				SPARE	16
17	SOUTH WEST LTS		1100		1	20	C	20	1				SPARE	18
19	SPARE				1	20	A	20	1				SPARE	20
21	VEST. A1000 LTS		150		1	20	B	20	1				SPARE	22
23	CORRIDOR LTS		1600		1	20	C	20	1				SPARE	24
25	CORRIDOR LTS		1500		1	20	A	20	1				SPARE	26
27	MECH. A1077/DOCK LTS		1540		1	20	B	20	1				SPARE	28
29	SPARE				1	20	C	20	1				SPARE	30
31	SPARE				1	20	A	20	1				SPARE	32
33	SPARE				1	20	B	20	1				SPARE	34
35	SPARE				1	20	C	20	1				SPARE	36
37	SPARE				1	20	A	20	1				SPARE	38
39	SPARE				1	20	B	20	1				SPARE	40
41	SPARE				1	20	C	20	1				SPARE	42

VA	VA	VA		AMPS		KVA		VA	VA	VA
0	9730	0	A	40.54	A	11.23	A	0	1500	0
0	8630	0	B	35.49	B	9.83	B	0	1200	0
0	7380	0	C	26.64	C	7.38	C	0	0	0
0	25740	0		34.21	TOTAL	28.44		0	2700	0

PANEL "2HMA" — PHASE / WIRE 3 / 4 — MAIN LUG 225 AMPS — MAIN BREAKER AMPS
AIC RATING 22K AMPS — RATING 277 / 480 VOLTS — SUBFEED LUGS — COMMENT

CKT	LOCATION	RECEPT	LTG	OTHER	POLE	SIZE	PHASE	SIZE	POLE	OTHER	LTG	RECEPT	LOCATION	CKT
1	SOUTH WEST LTS		3510		1	20	A	20	1				SPARE	2
3	WEST LTS		2470		1	20	B	20	1				SPARE	4
5	NORTH WEST LTS		2540		1	20	C	20	1				SPARE	6
7	NORTH LTS		4510		1	20	A	20	1				SPARE	8
9	EAST LTS		3650		1	20	B	20	1				SPARE	10
11	SOUTH LTS		2770		1	20	C	20	1				SPARE	12
13	DRILL FLOOR LTS		1800		1	20	A	20	1				SPARE	14
15	CORRIDOR LTS		900		1	20	B	20	1				SPARE	16
17	CORRIDOR LTS		1100		1	20	C	20	1				SPARE	18
19	WOMEN A2080 LTS		350		1	20	A	20	1				SPARE	20
21	MEN A2083 LTS		910		1	20	B	20	1				SPARE	22
23	NORTH EAST LTS		1020		1	20	C	20	1				SPARE	24
25	SPARE				1	20	A	20	1				SPARE	26
27	SPARE				1	20	B	20	1				SPARE	28
29	SPARE				1	20	C	20	1				SPARE	30
31	SPARE				1	20	A	20	1				SPARE	32
33	SPARE				1	20	B	20	1				SPARE	34
35	SPARE				1	20	C	20	1				SPARE	36
37	SPARE				1	20	A	20	1				SPARE	38
39	SPARE				1	20	B	20	1				SPARE	40
41	SPARE				1	20	C	20	1				SPARE	42

VA	VA	VA		AMPS		KVA		VA	VA	VA
0	10170	0	A	36.71	A	10.17	A	0	0	0
0	7930	0	B	28.63	B	7.93	B	0	0	0
0	7430	0	C	26.82	C	7.43	C	0	0	0
0	25530	0		30.71	TOTAL	25.53		0	0	0

MECHANICAL EQUIPMENT SCHEDULE-1A

	NAME OF MECHANICAL EQUIPMENT	AIR HANDLING UNIT	AIR HANDLING UNIT	CHILLER	EXHAUST FAN	RELIEF AIR FAN	HOT WATER PUMP	CHILL WATER PUMP	GLYCOLE WATER PUMP	BOILER	DOMESTIC WATE CIRCULATIO PUMP	WATER PUMP	MOTORIZED DAMPERS
MOTOR DATA	EQUIPMENT NO.	AH-1	AH-2	CH-1	EF-1,2	RF-1 TO 4	HWP-1,2	CHW-1	GMU-1	B-1,2	DCP-1,2	BP-1,2	
	RATING/WATTS	40 HP	7.5 HP	011 T	1/2 1/3 HP	1 1/2 HP	7.5 HP	7.5 HP	1/2 HP	1 1/2 HP	--	1 HP	--
	VOLTAGE	480	480	480	120	480	480	480	120	480	120	480	120
	PHASE	3	3	3	1	3	3	3	1	3	1	3	1
	AMPS	52	11	253	9.8	2.6	11	11	9.8	2.6	--	1.8	--
	WIRE SIZE	3 #3	3 #12	3 #500	2 #12	3 #12	3 #12	3 #12	2 #12	3 #12	2 #12	3 #12	2 #12
	GROUND WIRE	1 #8	1 #12	1 #1/O	1 #12	1 #12	1 #12	1 #12	1 #12	1 #12	1 #12	1 #12	1 #12
	CONDUIT SIZE	1"	3/4"	3 1/2"	3/4"	3/4"	3/4"	3/4"	3/4"	3/4"	3/4"	3/4"	3/4"
	FUSE DISC. SW.	100	30	400	--	30	30	30	--	30	--	30	--
	RTYPE RKI FUSES	70	15	350	--	3.5	15	15	--	3.5	--	--	--
	NON-FUSE SW.	--	--	--	--	--	--	--	--	--	--	--	--
	STARTER SIZE	--	--	--	--	--	--	--	--	--	--	--	--
	NOTES	4	3	1	2	4	3	3	2	3	2	3	2

NOTES:
1. STARTER IS FURNISHED WITH THE UNIT. PROVIDE DISCONNECT.
2. PROVIDE THERMAL OVERLOAD SWITCH.
3. PROVIDE COMBINATION STARTER & DISCONNECT (HOA) WITH (2) N.O. & N.C CONTACTS.
4. PROVIDE VFD AND SITE FUSED DISCONNECT WITH ELECTRICAL INTERLOCK. (FACTORY INSTALLED).
5. UTILIZE EXISTING VFD AND RELOCATE AS REQUIRED.

State of Utah
Department of Administrative Services

DFCM

Division of Facilities
Construction & Management

4110 State Office Building
Salt Lake City, Utah 84114
Phone: (801) 538 - 3018
Fax: (801) 538 - 3267

Internet: http://www.dfcm.state.ut.us

Utah National Guard

12953 South Minuteman Drive
Draper, Utah 84020-1726

E.C.E. INC., CONSULTING ENGINEERS
939 SO. WEST TEMPLE
SALT LAKE CITY, UTAH 84101
(801) 521-8007

BUILDING NAME:
ADMINISTRATION

PROJECT TITLE:
TASS COMPLEX
CAMP WILLIAMS
UTAH NATIONAL GUARD

MARK	DATE	DESCRIPTION

ISSUE TYPE: Final Bid Documents
ISSUE DATE: April 16, 2007
DFCM PROJECT NO: 95059480
CAD PROJECT NO: 2950
CAD DWG FILE:
DRAWN BY:
CHK'D BY:
COPYRIGHT: State of Utah

SHEET TITLE
ADMINISTRATION ELECTRICAL PANEL SCHEDULES

SHEET NUMBER
EE-6A7

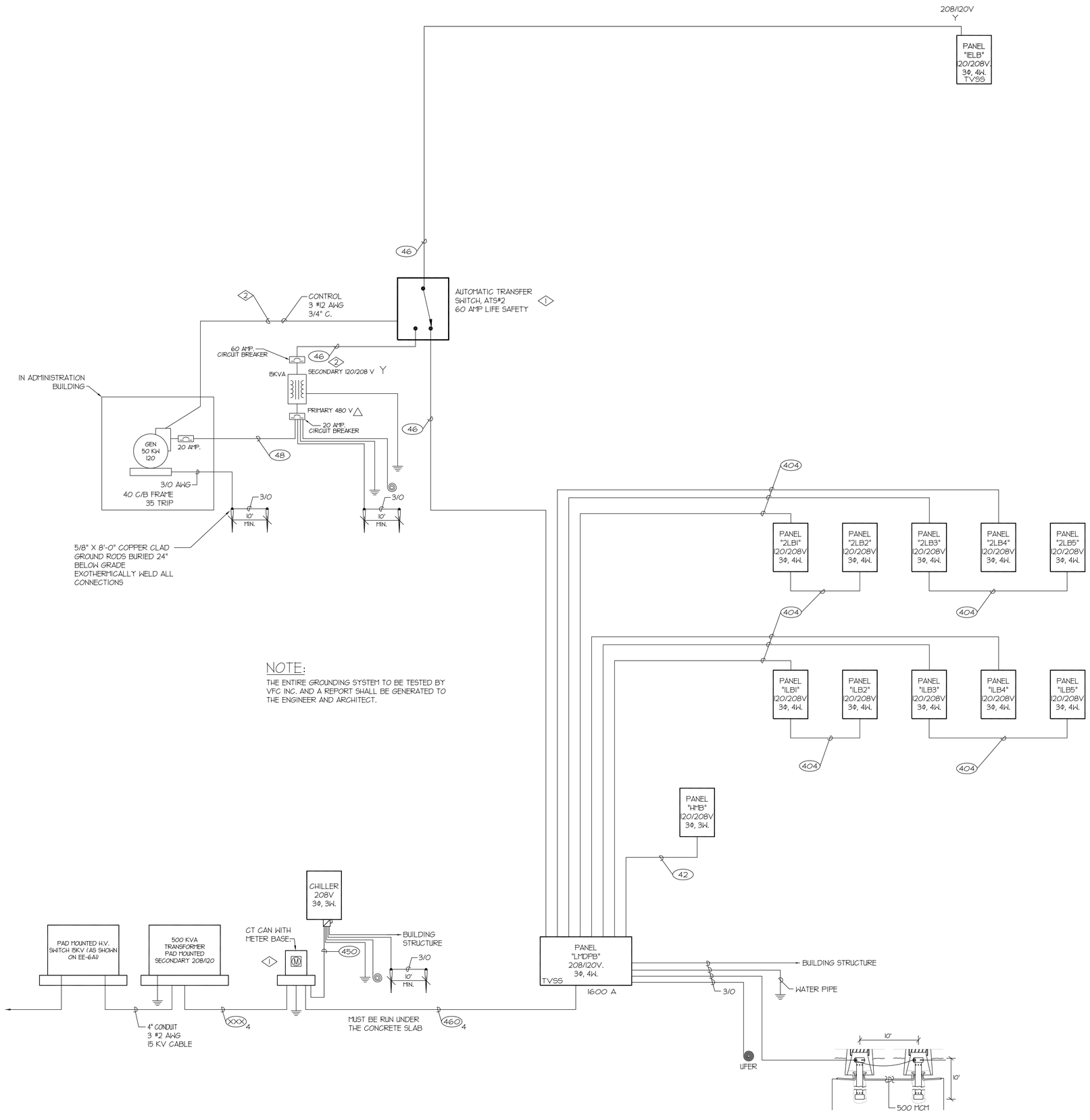

NOTE:

THE ENTIRE GROUNDING SYSTEM TO BE TESTED BY VFC INC. AND A REPORT SHALL BE GENERATED TO THE ENGINEER AND ARCHITECT.

CONDUCTORS/CONDUIT FILL SCHEDULE

SYMBOL	WIRE SIZE	NO. OF WIRES	GROUND WIRE SIZE	COND. SIZE
210	10 AWG	2		3/4
310		3		
410		4		
28	8 AWG	2	8	3/4
38		3		
48		4		1
58		4		1
26	6 AWG	2		
36		3		
46		4		
56		5		
24	4 AWG	2		
34		3		
44		4		1-1/4
33	3 AWG	3		
43		4		
32	2 AWG	3		
42		4	6	
31	1 AWG	3		1-1/2
41		4		
301	1/0 AWG	3		
40		4	1/0*	2
302	2/0 AWG	3	4	1-1/2
402		4		2
303	3/0 AWG	3		
403		4		
304	4/0 AWG	3	2	
404		4		2-1/2
325	250 AWG	3		
425		4		
335	350 AWG	3	1/0	
435		4		3
440	400 AWG	4		3
350	500 AWG	3		3-1/2
450		4		4
360	600 AWG	3		4
460		4		

NOTES: FOR ALL PARALLEL RUNS PROVIDE GROUND CONDUCTORS IN EACH CONDUIT BASED ON NEC TABLE 250-95 FOR THE SPECIFIED RATING OF THE OVER CURRENT DEVICES. OVERSIZE THE CONDUIT ACCORDINGLY TO ACCOMIDATE THE LARGER GROUND CONDUCTORS.

TOTAL LENGTH OF BRANCH CIRCUITS (ORIGINATING FROM A 20 AMP CIRCUIT BREAKER IN A BRANCH PANEL IN AN ELECTRICAL ROOM HOUSING A DRY TYPE TRANSFORMER FEEDING THE BRANCH PANEL DIRECTLY OR THROUGH A DISTRIBUTION PANEL AND ENDS AT THE LAST DUPLEX OUTLET ON THE CIRCUIT OR ENDS AT THE LAST LIGHT FIXTURES) SHALL NOT EXCEED:

	120 VOLTS	277 VOLTS
a- 75' USING #12 AWG	75 FT.	180 FT.
b- 125' USING #10 AWG	125 FT.	260 FT.
c- 205' USING #8 AWG	205 FT.	420 FT.
d- 325' USING #6 AWG	325 FT.	660 FT.

THE ABOVE CIRCUIT LENGTHS ARE BASED ON 4% VOLTAGE DROP AT 16 AMPS LOAD AT THE END OF THE CIRCUIT. SAME WIRE SIZE SHALL BE USED FOR THE ENTIRE CIRCUIT.

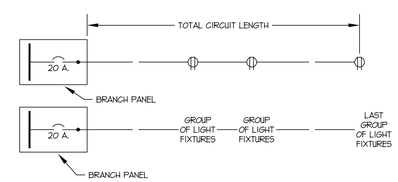

SCALE: N.T.S.

TYPICAL BRANCH CIRCUIT LENGTH DETAIL

REFERENCE NOTES:

1. ATS SHOWN IS FOR FUTURE. UNDER THE BASE BID FURNISH AND INSTALL A J-BOX (12" X 24" X 6" DEEP)
2. FOR GENERATOR FEEDER AND CONTROL PROVIDE J-BOXES ON THE OUTSIDE WALL. RUN CONDUIT TO THE J-BOX ABOVE.

State of Utah
Department of Administrative Services

Division of Facilities
Construction & Management

4110 State Office Building
Salt Lake City, Utah 84114
Phone: (801) 538 - 3018
Fax: (801) 538 - 3267

Internet: http://www.dfcm.state.ut.us

Utah National Guard

12953 South Minuteman Drive
Draper, Utah 84020-1726

E.C.E. INC., CONSULTING ENGINEERS
939 SO. WEST TEMPLE
SALT LAKE CITY, UTAH 84101
(801) 521-8007

BUILDING NAME:

BILLETING

PROJECT TITLE:

TASS COMPLEX
CAMP WILLIAMS

UTAH NATIONAL GUARD

MARK	DATE	DESCRIPTION

ISSUE TYPE:
Final Bid Documents

ISSUE DATE:
April 16, 2007

DFCM PROJECT NO: 95059480

CAD PROJECT NO: 2950

CAD DWG FILE:

DRAWN BY:

CHK'D BY: .

COPYRIGHT: State of Utah

SHEET TITLE

BAY BILLETING BUILDING
POWER SINGLE LINE
DIAGRAM
& DETAILS

SHEET NUMBER

EE-6B1

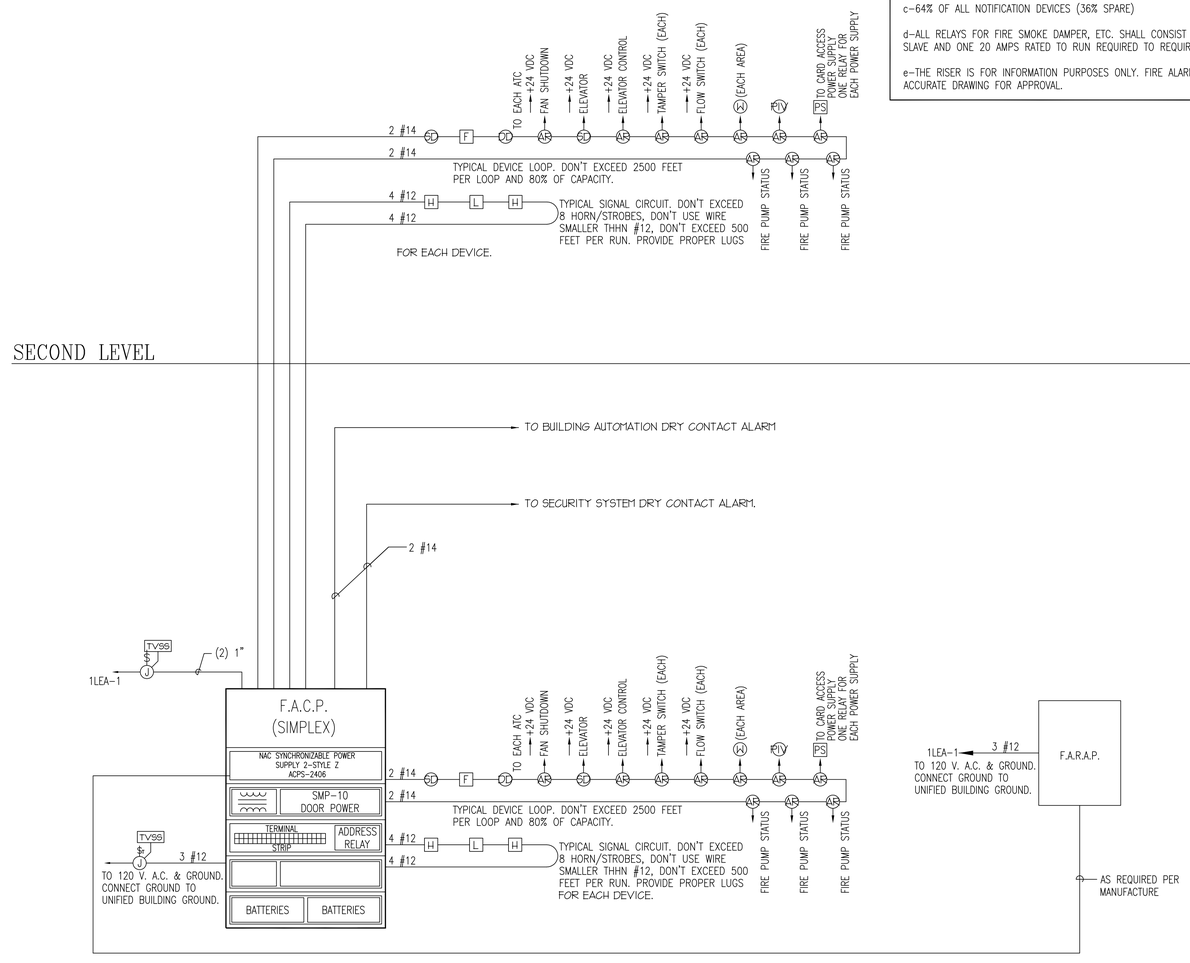

PROVIDE:

a-80% OF SD PER CIRCUIT (20% SPARE)

b-80% OF ALL OTHER ADDRESSABLE DEVICES PER CIRCUIT (20% SPARE)

c-64% OF ALL NOTIFICATION DEVICES (36% SPARE)

d-ALL RELAYS FOR FIRE SMOKE DAMPER, ETC. SHALL CONSIST OF TWO RELAYS, ONE SLAVE AND ONE 20 AMPS RATED TO RUN REQUIRED TO REQUIRED DEVICES.

e-THE RISER IS FOR INFORMATION PURPOSES ONLY. FIRE ALARM SUPPLIER TO PROVIDE ACCURATE DRAWING FOR APPROVAL.

NOTE:

1. IN AND OUT CABLES TO THE DEVICES MUST RUN IN A SEPARATE CONDUIT. 3/4" CONDUIT SHALL BE THE MINIMUM SIZE. UTILIZE CLASS "A" LOOP.
EXCEPTION:
A SINGLE 1/2" STEEL FLEXIBLE CONDUIT LESS THAN 6' LONG TO A SINGLE SMOKE DETECTOR, OR OTHER SINGLE ADDRESSABLE INITIATING DEVICE. THE ADDRESSABLE LOOP MAY FEED AND RETURN IN THE SAME 1/2" FLEXIBLE CONDUIT.

2. ALL FIRE ALARM DEVICES, CONTROL PANELS, REMOTE ANNUNCIATOR PANEL AND DATA GATHERING PANELS SHALL BE FURNISHED BY CONTRACTOR AND INSTALLED BY CONTRACTOR.

3. ALL PROGRAMMING WILL BE DONE BY CONTRACTOR.

4. ALL LABELING TO BE DONE BY CONTRACTOR.

5. ALL WIRING TO BE DONE BY CONTRACTOR.

6. PROVIDE AN ADDRESSABLE RELAY FOR EACH POWER SUPPLY.

7. ALL STROBES SHALL BE SYNCHRONIZED IN THE ENTIRE BUILDING THRU THE PANEL.

8. COORDINATE EXACT NUMBER AND LOCATION OF ALL TAMPER, FLOW SWITCHES AND PIV VALVES WITH THE FIRE SPRINKLER DRAWINGS.

9. LOCATION OF DD TO BE COORDINATED WITH MECHANICAL CONTRACTOR.

10. VERIFY NUMBER AND LOCATION OF ATC PANELS PER MECHANICAL DRAWINGS

IMPORTANT NOTE:

1. CONDUCTOR TYPE MIGHT BE DIFFERENT FROM DIFFERENT MANUFACTURE. PROVIDE PROPER CABLE, HARDWARE, SOFTWARE, PROGRAMMING, ETC. AS REQUIRED FOR A COMPLETE INSTALLATION.

SCALE: N.T.S.	TYPICAL FIRE ALARM SINGLE LINE DIAGRAM

A – NON-SHEILDED CABLE CONTAINING:
ONE RED AND ONE BLACK #16 STRAND WEST PENN CDT #225
ONE PAIR #16 AWG (UL) TYPE CMR C (UL) 75C B2192

State of Utah
Department of Administrative Services

Division of Facilities Construction & Management
4110 State Office Building
Salt Lake City, Utah 84114
Phone: (801) 538 - 3018
Fax: (801) 538 - 3267
Internet: http://www.dfcm.state.ut.us

Utah National Guard
12953 South Minuteman Drive
Draper, Utah 84020-1726

E.C.E. INC., CONSULTING ENGINEERS
939 SO. WEST TEMPLE
SALT LAKE CITY, UTAH 84101
(801) 521-8007

BUILDING NAME:
BILLETING

PROJECT TITLE:
TASS COMPLEX
CAMP WILLIAMS

UTAH NATIONAL GUARD

MARK	DATE	DESCRIPTION

ISSUE TYPE:
Final Bid Documents

ISSUE DATE:
April 16, 2007

DFCM PROJECT NO: 95059480
CAD PROJECT NO: 2950
CAD DWG FILE:
DRAWN BY:
CHK'D BY: .
COPYRIGHT: State of Utah

SHEET TITLE
BAY BILLETING BUILDING
TYPICAL FIRE ALARM
SINGLE LINE
DIAGRAM & NOTES

SHEET NUMBER
EE-6B2

KEYED NOTES:

1. ONE OUTLET WITH 4 JACKS PER LOAD.
2. MINIMUM (2) 4-PAIR CAT-6 CMR TO EACH OUTLET COMMUNICATIONS PANEL FOR DATA. TERMINATE ALL FOUR PAIRS.
3. (1) 4-PAIR CAT-6 CMR TO EACH OUTLET COMMUNICATIONS PANEL FOR PHONE. TERMINATE ALL FOUR PAIRS.
4. (1) RG-6/U QUAD-SHIELD RISER RATED TO EACH OUTLET FOR CABLE TV SIGNAL BY OTHERS.
5. CROSS-CONNECT FROM THE CABLE IN NOTE 1 ABOVE TO THE MAIN CROSS CONNECT.
6. CAT-6 CMR.
7. TERMINATE THE COAX CABLE IN NOTE 4 ABOVE, FROM EACH TV OUTLET, ON A RACK MOUNTED PATCH PANEL, WITH F-TYPE CONNECTORS.
8. CABLE TV RISER CABLES TO BE FURNISHED AND INSTALLED BY THE CABLE TV SERVICE PROVIDER.
9. FIBER OPTIC RISER CABLES.
10. CROSS-CONNECTS.
11. FOUR STAND MULTI-MODE.

NOTE:

1. SIEMONS IS THE APPROVED SYSTEM.
2. PROVIDE STANDARD WARRANTIES TO THE OWNER AND CERTIFY INSTALLED SYSTEM.

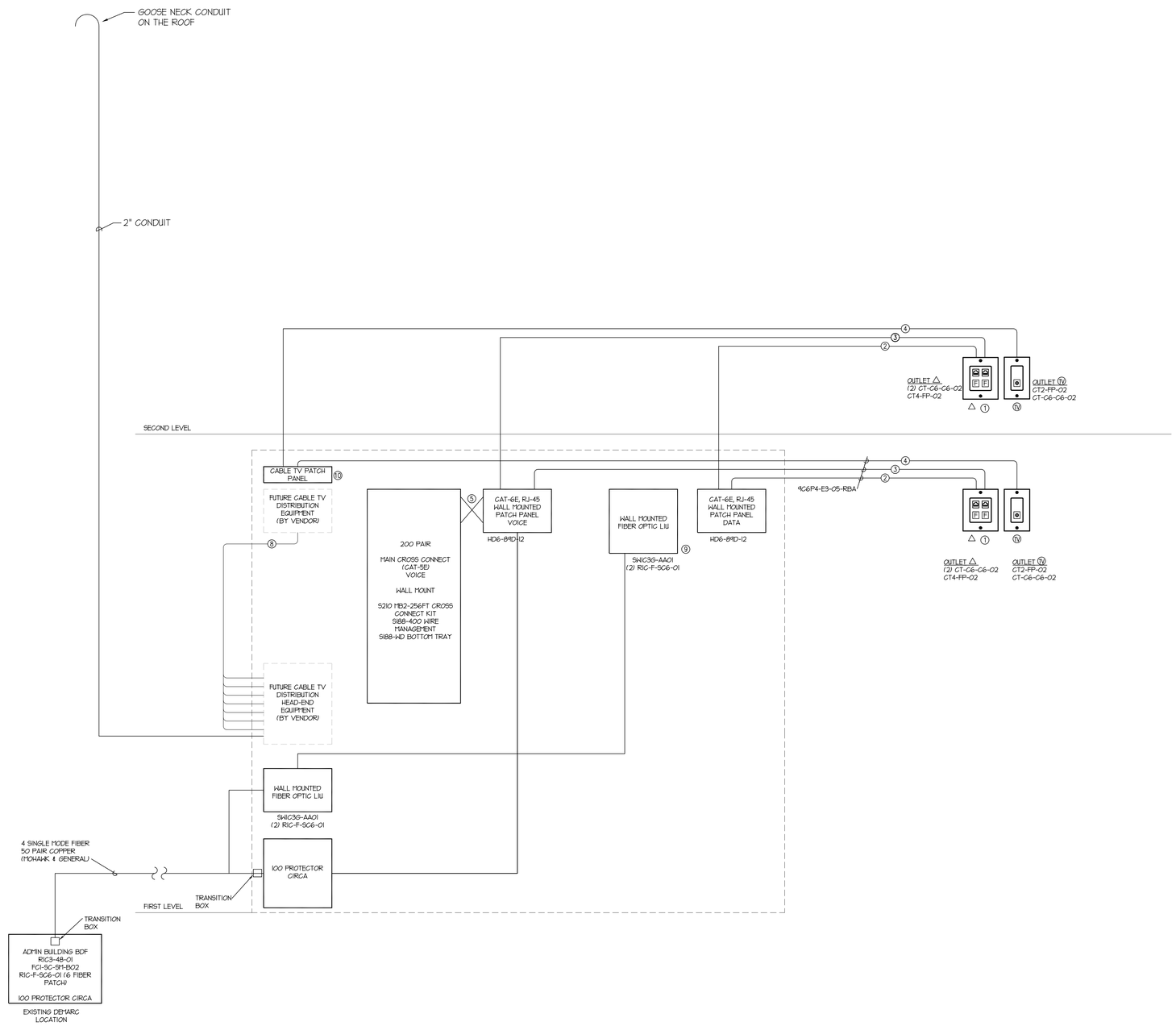

BUILDING COMMUNICATIONS RISER DIAGRAM

SCALE: NOT TO SCALE

State of Utah
Department of Administrative Services

Division of Facilities Construction & Management
4110 State Office Building
Salt Lake City, Utah 84114
Phone: (801) 538 - 3018
Fax: (801) 538 - 3267
Internet: http://www.dfcm.state.ut.us

Utah National Guard
12953 South Minuteman Drive
Draper, Utah 84020-1726

E.C.E. INC., CONSULTING ENGINEERS
939 SO. WEST TEMPLE
SALT LAKE CITY, UTAH 84101
(801) 521-8007

BUILDING NAME:
BILLETING

PROJECT TITLE:
TASS COMPLEX
CAMP WILLIAMS
UTAH NATIONAL GUARD

MARK	DATE	DESCRIPTION

ISSUE TYPE:
Final Bid Documents

ISSUE DATE:
April 16, 2007

DFCM PROJECT NO: 95059480
CAD PROJECT NO: 2950
CAD DWG FILE:
DRAWN BY:
CHK'D BY: .
COPYRIGHT: State of Utah

SHEET TITLE
BAY BILLETING BUILDING COMMUNICATION SYSTEM SINGLE LINE DIAGRAMS

SHEET NUMBER
EE-6B3

	DESCRIPTION	DETAILS		MANUFACTURER	CATALOG NUMBER	PICTURE
T-1	Fluorescent light fixture 2X4 w ith clear bottom lens suitable for high bay illumination. Tw o light levels.	Lamp	4F54 HO	Columbia	LHR4-454-LS-ST-4EB5277-FSA-CLEAR	
		Voltage	277	Lightolier	FLND454EB1-CL277	
		Mounting	Surface	Lithonia	FHB-24-4-54T5HO-B1X12-mvolt-1/4-TUBPHP-CL	
		Finish	White	Metalux	2HB-454T5-G-CL-277V-EBT1	
				L.A. Lighting	HBI600-4-4M-SR-CA-2E5H-277V	
T-2	Fluorescent light fixture 2X4 parabolic, 4" deep louver, 24 cell. Semi specular.	Lamp	3F32	Columbia	4524-332G-LD38-S-EB8LH277	
		Voltage	277	Lightolier	VPA2G27PP332-277-03	
		Mounting	Grid	Lithonia	2PM4GB-3-32-24LD-Mvolt-1/3-TUBPHP	
		Finish	White	Metalux	2PGX-332S38I-277V-ER81	
T-3	Fluoresenct light fixture 8"X8" length and lamp as required. Tw o lamps dow n, one lamp up. Louver bottom, lens on top.	Lamp	3f32	Alera	MS8-1AU2D-T8-WM-LD-EB8LH277-SCBA-DC	
		Voltage	272	Gammalux	GS96B-1/232T8-277-ERS-??-WM-APL/BB-WH	
		Mounting	Wall	Prudential	P 69 2T8/1T8 04 SPL TM WD3 DC 277 WS 10	
		Finish	White	Neor	14DIW-1/2T8-4FT-277V EB-S1-S58/S79	
T-4	4' fluorescent strip light fixture w ith w ire guard and reflector.	Lamp	2f32	Columbia	CSR4-232-EB8LH277-CSWG4	
		Voltage	277	Lightolier	SW4S232-277-SO w /w ire guard and reflector	
		Mounting	Chain	Lithonia	C 2 32 277 TUBPHP CSMR 48 WGCSMR	
		Finish	White	Metalux	IC-232-277V-ER81-WG/DI-4FT-U	
T-5	Fluorescent dow n light fixture 8" aperture, low irridescent. 8" maximum depth, w ith semi specular trim.	Lamp	1-32w	Prescolite	CFT832EB-STF802	
		Voltage	277	Lightolier	7142BU W/8087CCLP	
		Mounting	Recessed	Lithonia	LP8F 42TRT M VOLT GEB1 802A	
				Port-Fluor	PD7-H142E-7HC	
T-6	Recessed quartz ellipsoidal dow n light fixture, 6" opening, Medium beam distribution.	Lamp	150QZ	Prescolite	1055-ST771	
		Voltage	120	Rambusch	RD45-150Q-B	
		Mounting	Recessed	Lithonia	GQT-150M-6AR	
		Finish		Port-Incan	H7682T-1651LI	
T-7	Recessed MR16 dow n light fixture, 3" opening, Medium beam distribution. Stainless Steel trim. Adjustable head.	Lamp	MR16-35w			
		Voltage	120			
		Mounting	Recessed			
		Finish	Stainles			
T-8	Fluorescent light fixture, suitable for outside, stainless steel hardw are.	Lamp	1-42w	Kim	WF21/42PL277/SCBA	
		Voltage	277	Kenall	MR13EL-PIA-CBA-32 or 42PLT	
		Mounting	Wall	Fail-Safe	TRE15-C-142CT-DT-SCBA	
		Finish	by Arch	Exceline	PR3SW142HFL-CBA 8 E0X	
				Exceline	GXSW 42 HFL-CBA 8	
T-9	Wall mounted halide light fixture. Type III distribution.	Lamp	70W MH	Kim	WD14D3/70MH/SBA	
		Voltage	277	Lithonia	WFL2-175M-BP-277	
		Mounting	Wall	Invue	VWS-175-MH-277-3S-SCBA-PC	
		Finish	by Arch	Halo	PW2-D-SCBA-3-175H-H-B	
				Exceline	GXMW175MA-L-CBA-8	
T-10	Arm mounted on 20 ft pole, light fixture, aluminum rectilinear housing, totally w ater proof.	Lamp	250W MH	Spaulding	RCS-A-H25-H3-Q-SCBA-SSS-2D-40-1-SCBA	
		Voltage	120-277	Lithonia	KW POLE SSP20 4.0 11 CTBS DM10 BC	
		Mounting	Pole	McGRAW	CAL250MH-MT-3S-BZ-CA40-SSS4A20SF-MI	
		Finish	by Arch	Wide-Lite	AL3M250-3-277-SSQ20	
T-11	FLUORESCENT LIGHT FIXTURE, 2X4, PRISMATIC LENS.	Lamp	2F32	Columbia	ST824-332-FSA12.125-3EB8LH277	
		Voltage	277	Lithonia	2SP8G-3-32-A12-mvolt-1/3-TUBPHP	
		Mounting	Grid	Metalux	2GC8-332A.125-277V-ER81	
		Finish	White	L.A. Lighting	GHL320-4-4M-FSW-2E5H-277	
T-12	FLUORESCENT LIGHT FIXTURE, 2'x4', PARABOLIC, 45 DEGREE CUT OFF ANGLE, 27 CELL.	Lamp	3F32	Columbia	HC24-332G-LD39-S-EBBLH-277	
		Voltage	277	Lithonia	2PMOG 3 32 27 LS Mvolt 1/3 GEB10IS	
		Mounting	Surface	Metalux	2P5GX332S-MI-UNV-ER81	
		Finish	White	L.A. Lighting		
				Lightolier	ALA2G18LP332UNVH2	
T-13	FLUORESCENT DOWN LIGHT FIXTURE, SUITABLE FOR SHOWER.	Lamp	1PLT32	Prescolite	TBX-TL3	
		Voltage	277	Lightolier	1100FTU/11785H	
		Mounting	Surface	Portfolio	PD6-V142E-6VL1WB	
		Finish		Lithonia	LI6F 26/32 TRT Mvolt/6LD2	
T-14	METAL HALIDE LOW BAY LIGHT FIXTURE, TOTALLY ENCLOSED SUITABLE FOR OUTDOOR USE	Lamp	175W MH	Guth	ELP-W-1-1-1-175M-2	
		Voltage	277			
		Mounting	Surface	Lithonia (Acrylic bow l)	TXR-175M-PA22C-TB-WL	
		Finish		Lumark	MHBE-5A-175-277V-WLP	
				Wide-Lite	ILXM-175-LB22-277	
T-15	SAME AS ABOVE EXCEPT WITH QUARTZ LAMP.	Lamp	300W	Guth	ELP-W-0-1-1-300W QUARTZ-1	
		Voltage	120			
		Mounting	Surface	Lithonia (Acrylic bow l)	TXR-175M-PA22C-TB-WL-QRS	
		Finish		Lumark	INBE-5A-300-120V-WLP	
				Wide-Lite	ILXM-175-LB22-277-LQ1	
T-16	FLUORESCENT LIGHT FIXTURE 1'X4' SUITABLE FOR GYP BOARD CEILING, PROVIDE WITH FLANGE.	Lamp	2F32	Columbia	ST814-232F-FSA12.125-EB8PR277	
		Voltage	277	Lightolier	SPS1FFSVI232H2	
		Mounting	Flange	Metalux	FC8232A.125-277-ER81	
		Finish	White	Lithonia	2SP8 F 2 32 A12125 Mvolt	
T-17	SAME AS ABOVE EXCEPT 2'X4" WITH 3 LAMPS	Lamp	3F32	Columbia		
		Voltage	277	Lightolier		
		Mounting	Flange	Metalux		

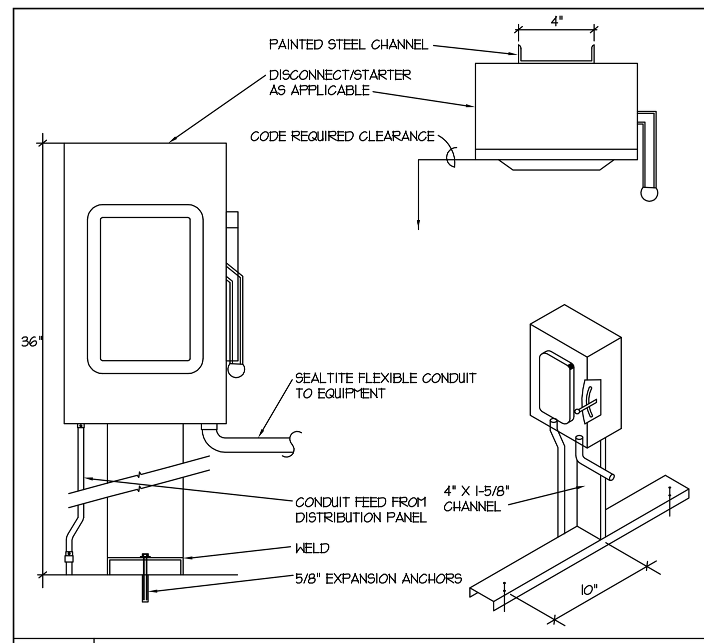

SCALE: N.T.S. REMOTE DISCONNECT STARTER DETAIL

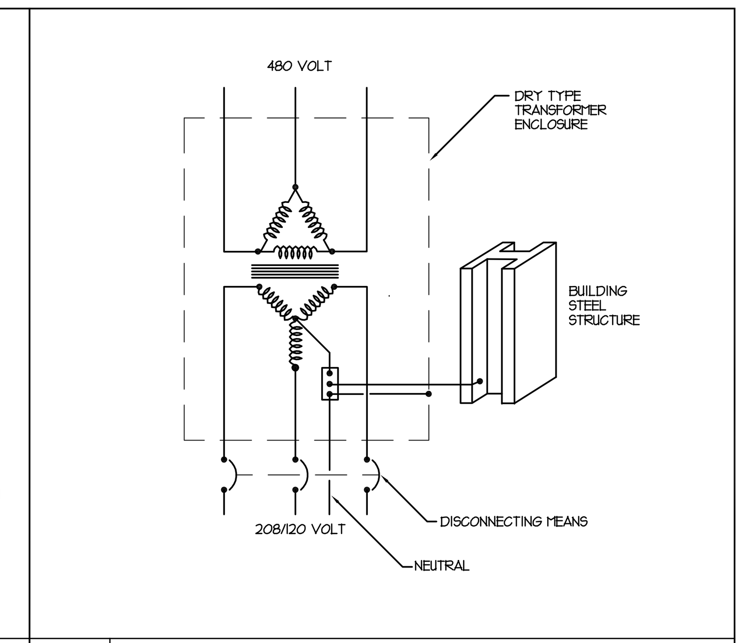

SCALE: N.T.S. DRY TYPE TRANSFORMER GROUNDING

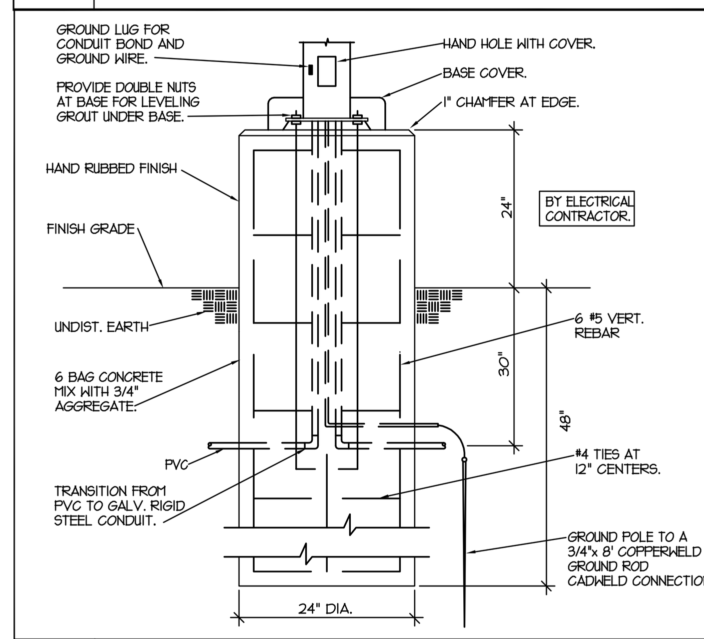

SCALE: N.T.S. LIGHT POLE BASE DETAIL FOR LONG POLE

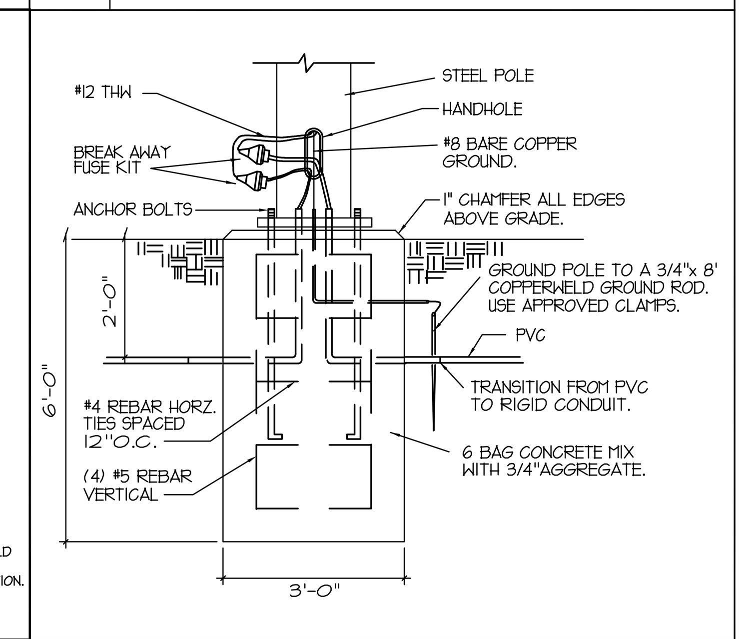

SCALE: N.T.S. POLE BASE DETAIL FOR SHORT POLE

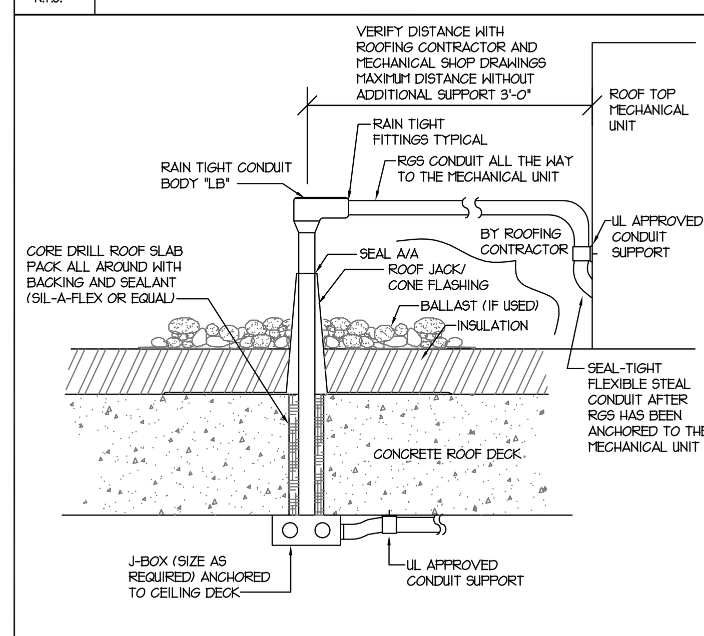

SCALE: N.T.S. CONDUIT ROOF PENETRATION

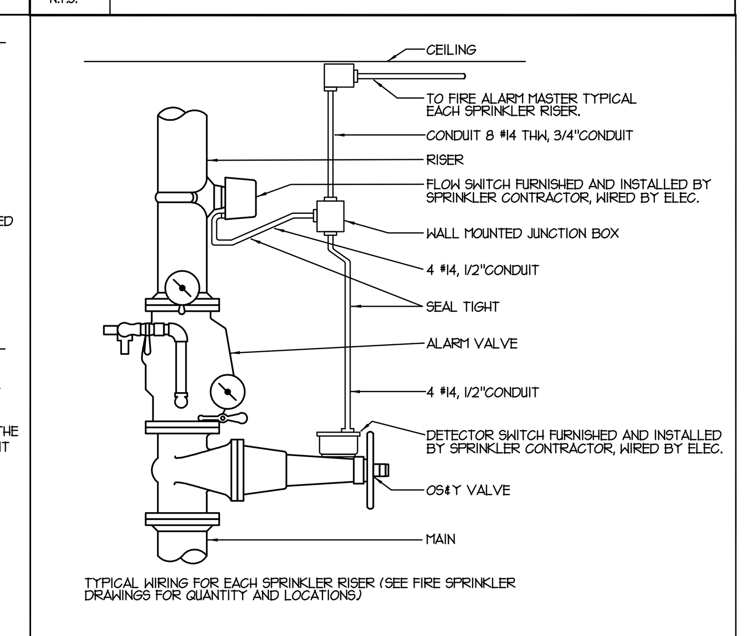

SCALE: N.T.S. FIRE SPRINKLER CONNECTION DETAIL

POWER SYSTEMS SYMBOL LIST

SYMBOL	DESCRIPTION
	DUPLEX CONVENIENCE OUTLET - 20 AMP
	DUPLEX CONVENIENCE OUTLET - 20 AMP GROUND FAULT INTERRUPTER
	4-PLEX CONVENIENCE OUTLET - 20 AMP
	4-PLEX CONVENIENCE OUTLET - 20 AMP GROUND FAULT INTERRUPTER
EWC	DUPLEX CONVENIENCE OUTLET - 20 AMP ELECTRIC WATER COOLER
SP	SURGE PROTECTED CEILING MOUNTED DUPLEX OUTLET
J	JUNCTION BOX - SIZE AND FUNCTION AS REQUIRED
	CONDUITS CONCEALED IN FLOOR OR BELOW GRADE
	CONDUITS CONCEALED IN CEILING AND WALLS
	ARROWS INDICATE HOME RUNS - LINES INDICATE NUMBER CONDUCTORS
	NON FUSED DISCONNECT SWITCH - SIZE AS REQUIRED
	FUSED DISCONNECT SWITCH - SIZE AS REQUIRED
S	COMBINATION STARTER/FUSED DISCONNECT SWITCH - SIZE AS REQUIRED
	CIRCUIT BREAKER DISCONNECT - SIZE AS REQUIRED
	MOTOR LOCATION
$T	MANUAL DISCONNECT WITH THERMAL OVERLOAD PROTECTION
	ELECTRICAL PANEL LOCATION
M	ELECTRICAL METER LOCATION
	CABLE TRAY SYSTEM
GR	GROUND ROD
W.P.	INDICATES WEATHER PROOF EQUIPMENT
CLG	INDICATES CEILING MOUNTED DEVICE
UPS	UNINTERRUPTIBLE POWER SUPPLY
T.V.S.S.	TRANSIENT VOLTAGE SURGE SUPPRESSER
XX-1	MECHANICAL EQUIPMENT CALLOUT
X	REFERENCE NOTE CALLOUT
	WIRE MOLD, DUPLEX OUTLETS REPRESENTED BY DARK RECTANGLE

LIGHTING SYSTEMS SYMBOL LIST

SYMBOL	DESCRIPTION
J	RECESSED FLUORESCENT FIXTURE
J	SURFACE MOUNTED FLUORESCENT FIXTURE
J	FLUORESCENT STRIP LIGHT FIXTURE
	RECESSED FIXTURE
	RECESSED WALL WASHER FIXTURE
	WALL MOUNTED FIXTURE
	WALL SCONCE FIXTURE
E	FIXTURES ON EMERGENCY POWER
	EXIT LIGHT. ARROWS SHOW EXIT DIRECTION
	WALL MOUNTED LIGHT FIXTURE
	EMERGENCY BATTERY OPERATED LIGHT-SINGLE OR TWIN BEAM
	POST MOUNTED PARKING OR WALKWAY LIGHTING
	DARK ROOM LIGHT FIXTURE - THREE COMPARTMENT
$	SINGLE POLE TOGGLE SWITCH - 20 AMP
$a,b	SINGLE POLE TOGGLE SWITCH - 20 AMP, LETTERS INDICATE SWITCH ASSIGNMENT
$3	THREE WAY TOGGLE SWITCH - 20 AMP
$4	FOUR WAY TOGGLE SWITCH - 20 AMP
$P	PILOT LIGHT TOGGLE SWITCH
$K	KEYED LIGHT SWITCH
M U,I,DT	CEILING MOUNTED OCCUPANCY SENSOR - U = ULTRASONIC, I = INFRARED, DT = DUAL TECH.
M U,I,DT	WALL MOUNTED OCCUPANCY SENSOR - U = ULTRASONIC, I = INFRARED, DT = DUAL TECH.
D	SLIDE CONTROL DIMMER
PC	PHOTO CELL SENSOR - LIGHTING CONTROL SYSTEM
T-X X	LIGHTING FIXTURE CALLOUT. NUMBER INDICATES A SUGGESTED QUANTITY- TO BE VERIFIED
X	REFERENCE NOTE CALLOUT

FIRE ALARM SYSTEM SYMBOL LIST

SYMBOL	DESCRIPTION
	ELECTRICAL PANEL LOCATION
SD	FIRE ALARM PHOTOELECTRIC SMOKE DETECTOR
DD	FIRE ALARM PHOTOELECTRIC DUCT DETECTOR
H	FIRE ALARM HEAT DETECTOR
F	FIRE ALARM FLAME DETECTOR
BDT A	BEAM DETECTOR TRANSMITTER - LETTER INDICATES PAIRING
BDR A	BEAM DETECTOR RECEIVER - LETTER INDICATES PAIRING
F	FIRE ALARM MANUAL PULL STATION
H	FIRE ALARM HORN WITH STROBE HIGH DECIBEL
H	FIRE ALARM HORN HIGH DECIBEL
h	FIRE ALARM HORN WITH STROBE LOW DECIBEL
h	FIRE ALARM HORN LOW DECIBEL
L	A.D.A. STROBE FOR FIRE ALARM
S	FIRE ALARM SPEAKER WITH STROBE
S	FIRE ALARM SPEAKER
FS	FIRE SPRINKLER FLOW SWITCH
TS	FIRE SPRINKLER TEMPER SWITCH
PIV	FIRE ALARM POST INDICATING VALVE
DH	MAGNETIC DOOR HOLDER
FSD	FIRE/SMOKE DAMPER
FAR	FIRE ALARM RELAY
AMM	ADDRESSABLE MONITOR MODULE
F.A.C.P.	FIRE ALARM CONTROL PANEL
F.A.R.A.P.	FIRE ALARM REMOTE ANNUNCIATOR PANEL
F.A.N.E.P.	FIRE ALARM NETWORK EXPANDER PANEL
X	REFERENCE NOTE CALLOUT

COMMUNICATION SYSTEMS SYMBOL LIST

SYMBOL	DESCRIPTION
	TELEPHONE TERMINAL BOARD
▲	FLUSH TELEPHONE OUTLET
△	FLUSH DATA/COMM OUTLET
	FLUSH FLOOR OUTLET - POWER ONLY
	FLUSH FLOOR OUTLET WITH TELE/DATA
	FLUSH POKE THROUGH OUTLET WITH TELE/DATA
TV	TELEVISION OUTLET
	CABLE TRAY SYSTEM
A	INDICATES DEVICE IS ABOVE COUNTER TOP
X	REFERENCE NOTE CALLOUT

State of Utah
Department of Administrative Services

Division of Facilities Construction & Management
4110 State Office Building
Salt Lake City, Utah 84114
Phone: (801) 538 - 3018
Fax: (801) 538 - 3267
Internet: http://www.dfcm.state.ut.us

Utah National Guard
12953 South Minuteman Drive
Draper, Utah 84020-1726

E.C.E. INC., CONSULTING ENGINEERS
939 SO. WEST TEMPLE
SALT LAKE CITY, UTAH 84101
(801) 521-8007

BUILDING NAME: BILLETING

PROJECT TITLE: TASS COMPLEX CAMP WILLIAMS

UTAH NATIONAL GUARD

MARK	DATE	DESCRIPTION
.		

ISSUE TYPE: Final Bid Documents

ISSUE DATE: April 16, 2007

DFCM PROJECT NO: 95059480
CAD PROJECT NO: 2950
CAD DWG FILE:
DRAWN BY:
CHK'D BY: .
COPYRIGHT: State of Utah

SHEET TITLE

BAY BILLETING BUILDING FIXTURE SCHEDULE & SYMBOL LIST

SHEET NUMBER

EE-6B4

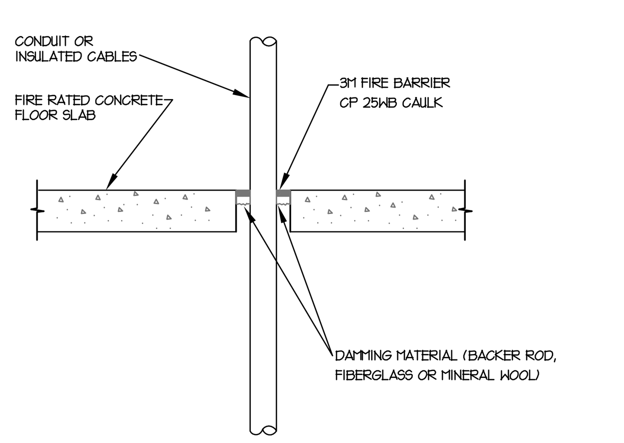

NOTE:
TYPICAL DETAILS SHOWING GENERAL FIRE STOPPING PROCEDURE. ACTUAL PROCEDURE DEPENDS UPON ANNULAR SPACE BETWEEN PIPE AND/OR INSULATION AND OPENING. FOLLOW MANUFACTURER'S INSTRUCTIONS.

SCALE: N.T.S.

TYPICAL FIRESTOP FOR CABLES/CONDUIT THROUGH CONCRETE FLOORING

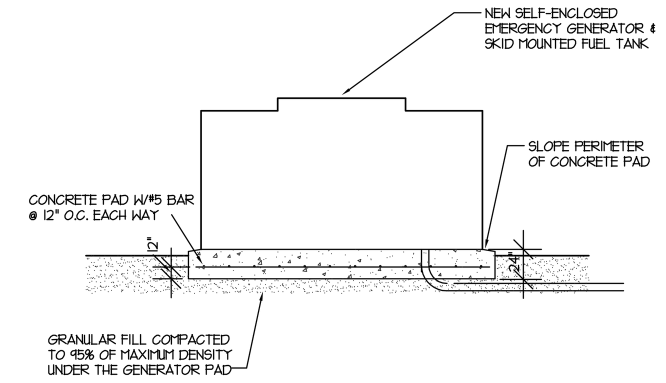

SCALE: N.T.S.

SECTION-GENERATOR PAD

GENERAL STRUCTURE NOTES - CONCRETE

A. Materials shall comply with the Standards specified in the latest edition of ACI 318, "Building Code Requirements for Reinforced Concrete".
1. Compressive strengths of concrete at 28 days shall be as follows:
a. Footings and slabs.............................4000 psi, Type II Cement.
b. All other Site Cast Concrete.................4000 psi
2. Concrete Density: Normal weight concrete shall be approximately 145 to 155 pounds per cubic foot.
3. Reinforcement steel: Grade 60, fy = 60,000 psi min. unless noted otherwise.
4. Admixtures: Exterior Concrete shall have 5% to 8% air entrainment.
a. Air-entraining admixtures, comply with ASTM C 260 (when used).
b. Calcium chloride shall not be added to the concrete mix.

B. Formwork shall comply with ACI Standards Publication 347 and the project specifications. The contractor shall be responsible for the design, detailing, care, placement and removal of the formwork and shores.

C. Concrete cover requirements for deformed bar reinforcing steel shall comply with ACI 318, "Building Code Requirements for Reinforced Concrete.
1. Cast-in-place Concrete: Clear. Cover
a. Cast against and permanently exposed to earth.......................3"
b. Formed concrete exposed to earth or weather:
#6 thru #18 bars..2"
#5 and small bars...1 1/2"

D. Detailing: All reinforcing, including WWF, shall be detailed, bolstered & supported to comply with ACI 315, "Manual of Standard Practice for Detailing Reinforcing Concrete Structures" and the Concrete Reinforcing Steel Institute (CRSI) recommendations. Reinforcing bars shall not be welded unless specifically shown on drawings.
1. Lap splice lengths shall be as follows:
a. 30 bar dia. For #3 and #4 bars.
b. 40 bar dia. For #5 thru #8 bars.
c. Do not splice stirrups & ties.
d. Do not splice vertical bars in retaining walls, unless specifically shown.
2. All embedments and dowels shall be securely tied to formwork or to adjacent reinforcing prior to the placement of concrete.
3. Use chairs or other support devices recommended by the CRSI to support and tie reinforcement bars and WWF prior to placing concrete. WWF shall be continuously supported at 36" o.c. maximum.

E. No aluminum conduit or product containing aluminum or any other material injurious to concrete shall be embedded in concrete.

SCALE: N.T.S.

GENERAL STRUCTURE NOTES - CONCRETE

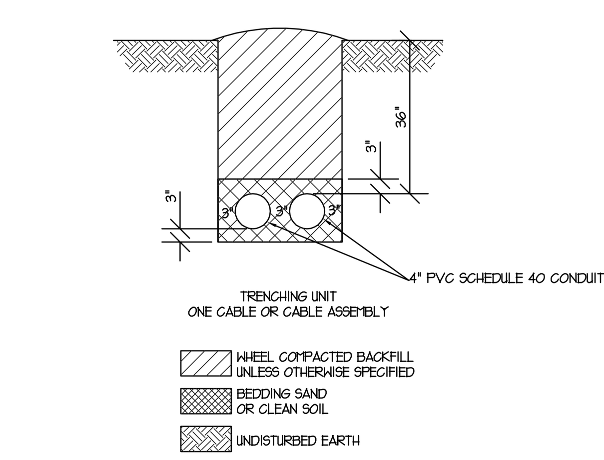

NOTES:
1. DEPTHS SPECIFIED ARE TO FINISHED GRADE.
2. OVER-EXCAVATE TRENCHES AS NECESSARY TO ALLOW FOR (a) SAND BEDDING OR (b) LOOSE AND SANDY SOIL OR (c) WHERE MORE THAN ONE CABLE WILL BE INSTALLED IN TRENCH AND LAYING OF FIRST CABLE MAY CAUSE TRENCH DAMAGE AND REDUCTION IN DEPTH.
3. SAND BEDDING IS NOT PART OF THESE UNITS AND WILL BE SPECIFIED AS NEEDED.
4. BACKFILL IS PART OF ALL TRENCHING UNITS INCLUDING JOINT-USE TRENCHES.

SCALE: N.T.S.

TRENCH DETAIL

#4 REBAR TYP.

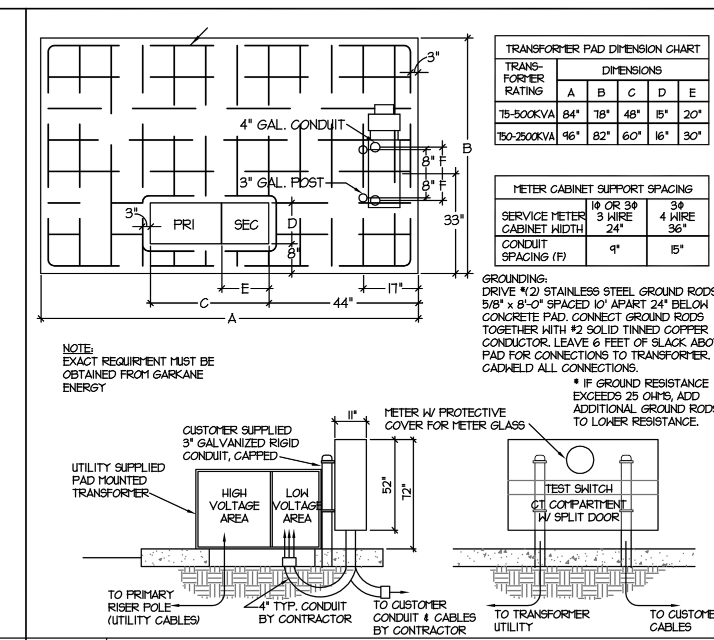

TRANSFORMER PAD DIMENSION CHART

TRANS-FORMER RATING	DIMENSIONS A	B	C	D	E
75-500KVA	84"	78"	48"	15"	20"
750-2500KVA	96"	82"	60"	16"	30"

METER CABINET SUPPORT SPACING

	1Φ OR 3Φ 3 WIRE	3Φ 4 WIRE
SERVICE METER CABINET WIDTH	24"	36"
CONDUIT SPACING (F)	9"	15"

GROUNDING:
DRIVE #(2) STAINLESS STEEL GROUND RODS 5/8" x 8'-0" SPACED 10' APART 24" BELOW CONCRETE PAD. CONNECT GROUND RODS TOGETHER WITH #2 SOLID TINNED COPPER CONDUCTOR. LEAVE 6 FEET OF SLACK ABOVE PAD FOR CONNECTIONS TO TRANSFORMER. CADWELD ALL CONNECTIONS.
* IF GROUND RESISTANCE EXCEEDS 25 OHMS, ADD ADDITIONAL GROUND RODS TO LOWER RESISTANCE.

SCALE: N.T.S.

TRANSFORMER PAD W/ CT CABINET DETAIL

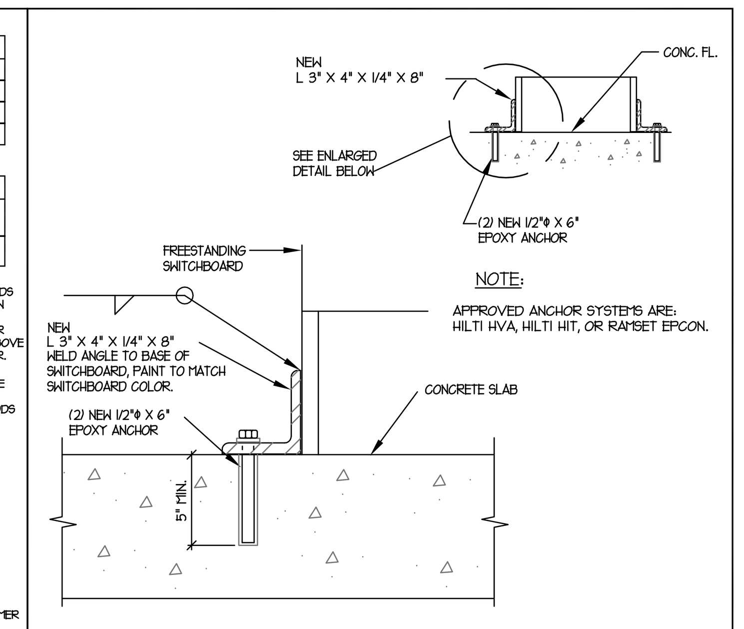

SCALE: N.T.S.

SWITCHBOARD SEISMIC BRACING DETAIL

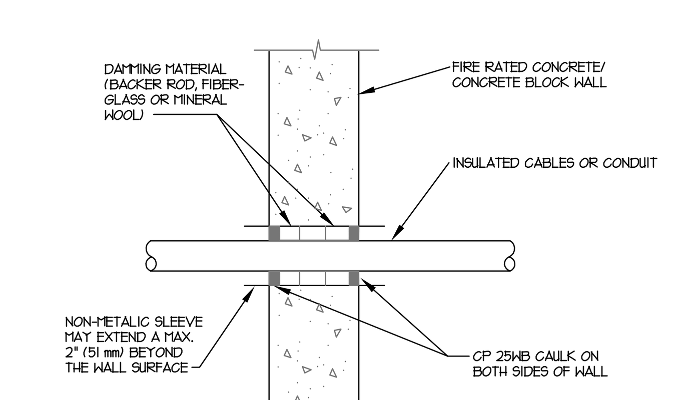

NOTE:
TYPICAL DETAILS SHOWING GENERAL FIRE STOPPING PROCEDURE. ACTUAL PROCEDURE DEPENDS UPON ANNULAR SPACE BETWEEN PIPE AND/OR INSULATION AND OPENING. FOLLOW MANUFACTURER'S INSTRUCTIONS.

SCALE: N.T.S.

TYPICAL FIRESTOP FOR CABLES/CONDUIT THROUGH CONCRETE WALLS

Type	Color of Spring	Spring rate lb./in.	Max. Load in lbs.	Def. in inches
A	GRAY	200	300	1.5
B	TAN	400	520	1.3
C	YELLOW	670	870	1.3
D	GREEN	1000	1100	1.1
E	RED	1560	1560	1.0
F	SILVER	2140	2140	1.0
G	BROWN	2800	2800	1.0
H	BLACK	3600	3600	1.0
K	BLK & YEL	5000	5000	1.0

NOTES:
1. Nested springs- black outer spring, yellow inner spring
2. Housings are made of welded steel.
3. All demensions are in inches.

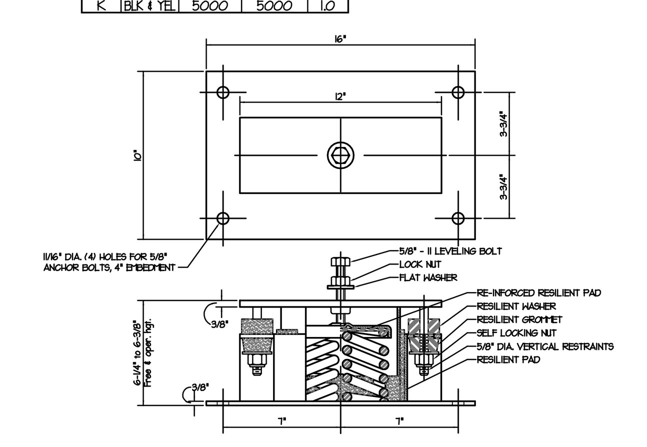

SCALE: N.T.S.

GENERATOR SEISMIC BRACING DETAIL

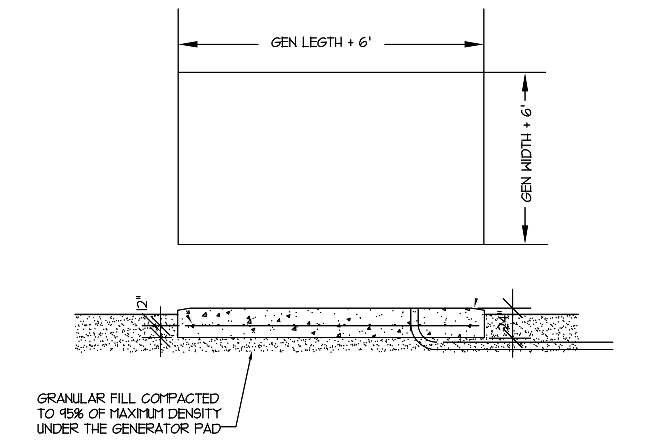

SCALE: N.T.S.

SECTION-GENERATOR PAD

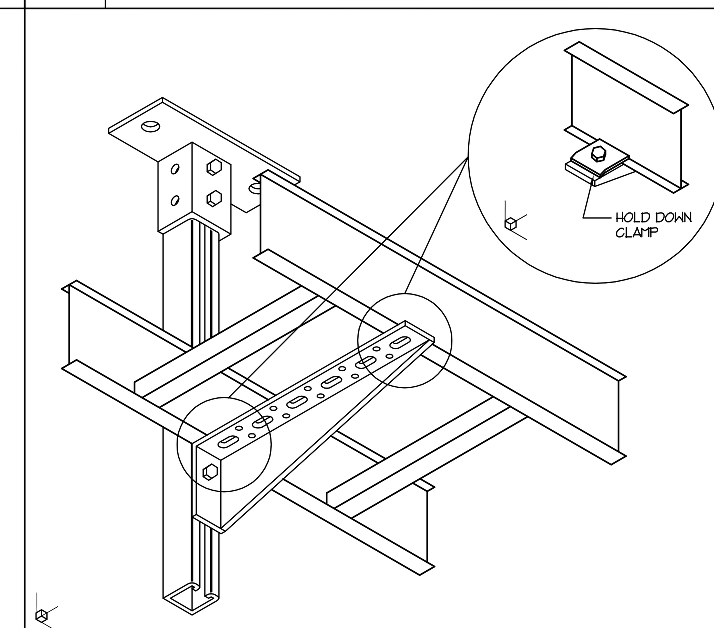

SCALE: N.T.S.

CABLE TRAY SUPPORT DETAIL

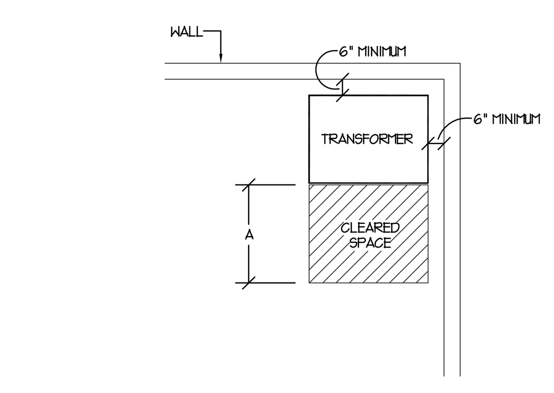

NOTE:
1. PROVIDE MINIMUM 6" CLEARANCE BETWEEN TRANSFORMER AND THE WALL
2. PROVIDE MINIMUM CLEARANCE IN FRONT OF THE TRANSFORMER AS FOLLOWS:

SYSTEM VOLTAGE	A
480	42"
208	36"

SCALE: N.T.S.

TYPICAL DRY TYPE TRANSFORMER CLEARANCE DETAIL

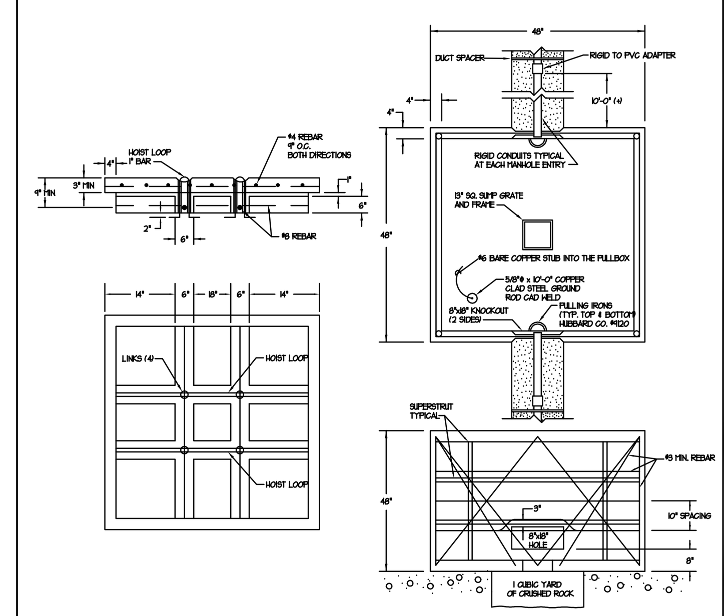

SCALE: N.T.S.

PULL BOX DETAIL

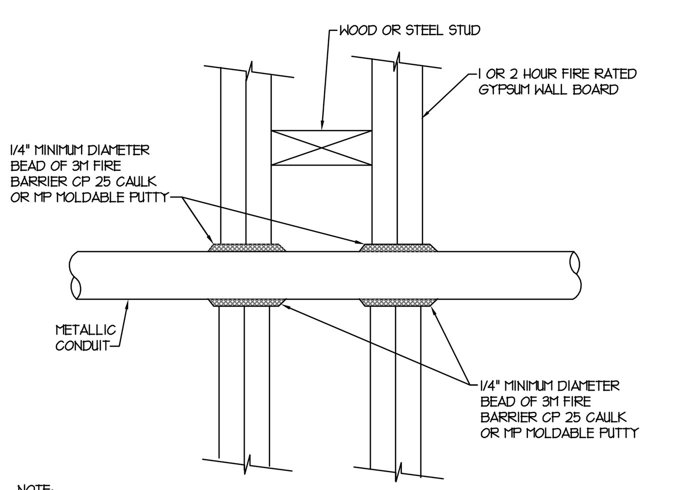

NOTE:
TYPICAL DETAILS SHOWING GENERAL FIRE STOPPING PROCEDURE. ACTUAL PROCEDURE DEPENDS UPON ANNULAR SPACE BETWEEN PIPE AND/OR INSULATION AND OPENING. FOLLOW MANUFACTURER'S INSTRUCTIONS.

SCALE: N.T.S.

FIRESTOP FOR METAL CONDUIT THROUGH GYPSUM WALL BOARD

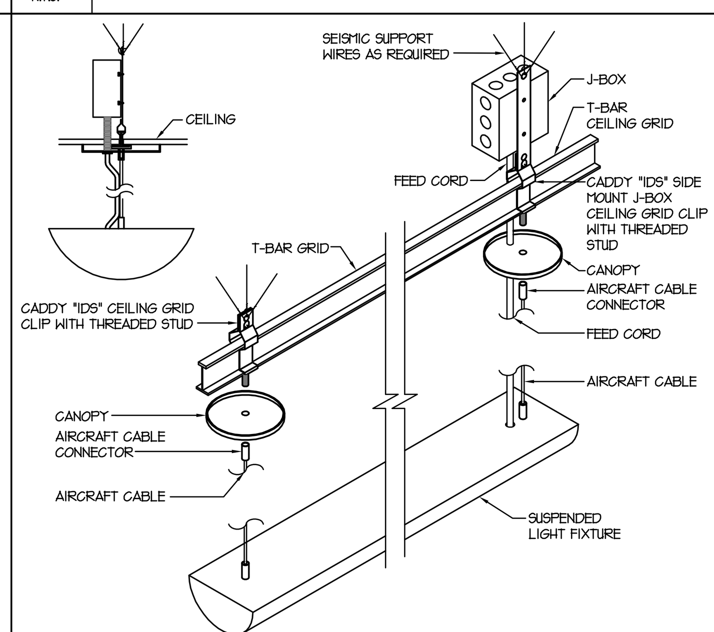

SCALE: N.T.S.

INDIRECT LIGHT FIXTURE MOUNTING DETAIL (GRID MOUNTED)

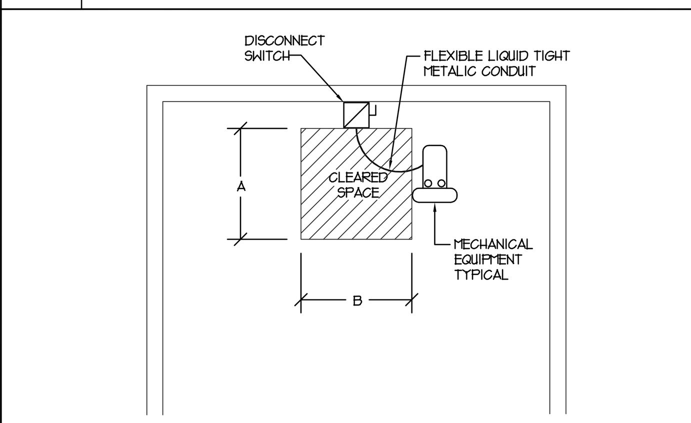

NOTE:
1. THE CONTRACTOR MUST COORDINATE EXACT LOCATION OF THE DISCONNECT WITH THE MECHANICAL CONTRACTOR TO ELIMINATE ANY OBSTACLE (PIPE, CONCRETE PAD, ETC) IN FRONT OF THE DISCONNECT. IF THERE ARE ANY OBSTACLES, PROVIDE UNISTRUT AND INSTALL THE DISCONNECT NEXT TO MECHANICAL EQUIPMENT IN ORDER TO PROVIDE THE REQUIRED CLEARANCE.

2. PROVIDE MINIMUM CLEARANCE AS FOLLOWS:

SYSTEM VOLTAGE	A	B
480	42"	30"
208	36"	30"

SCALE: N.T.S.

TYPICAL DISCONNECT CLEARANCE REQUIREMENTS

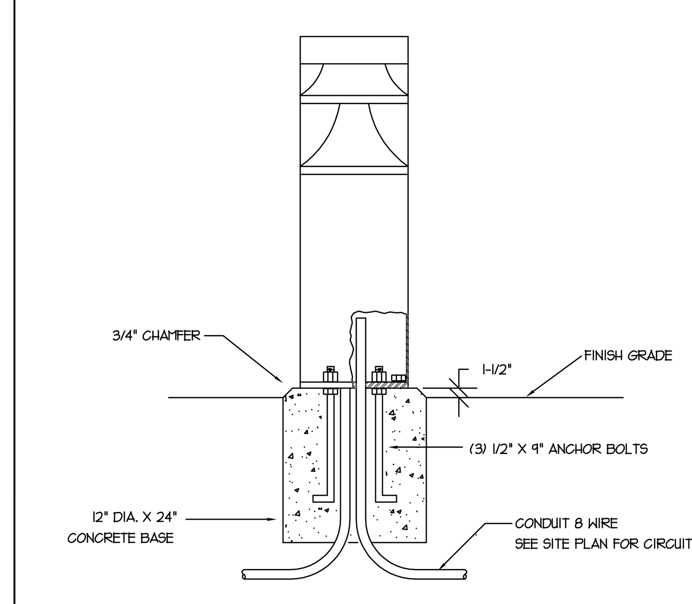

SCALE: N.T.S.

FIXTURE MOUNTING DETAIL

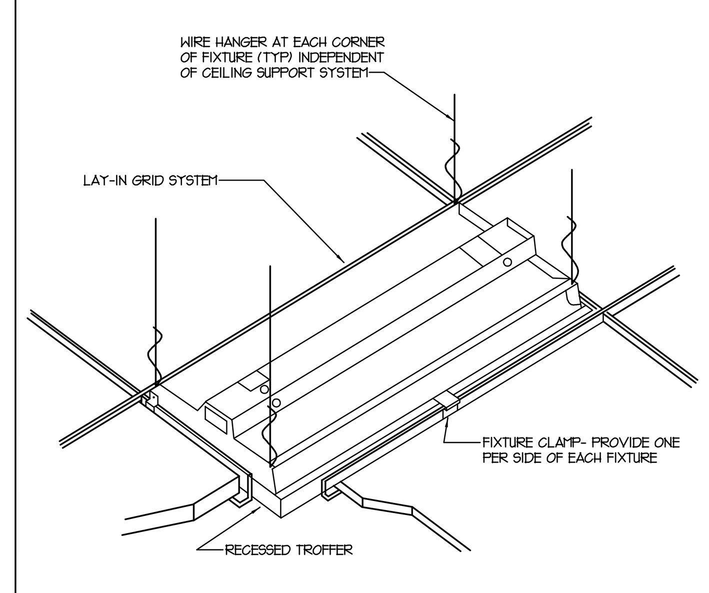

SCALE: N.T.S.

TYPICAL RECESSED FIXTURE MOUNTING DETAIL

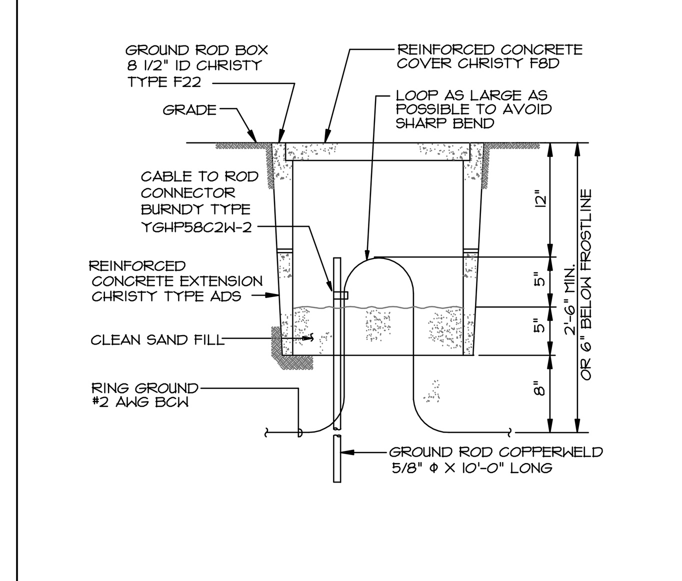

SCALE: N.T.S.

GROUND ROD ACCESS DETAIL

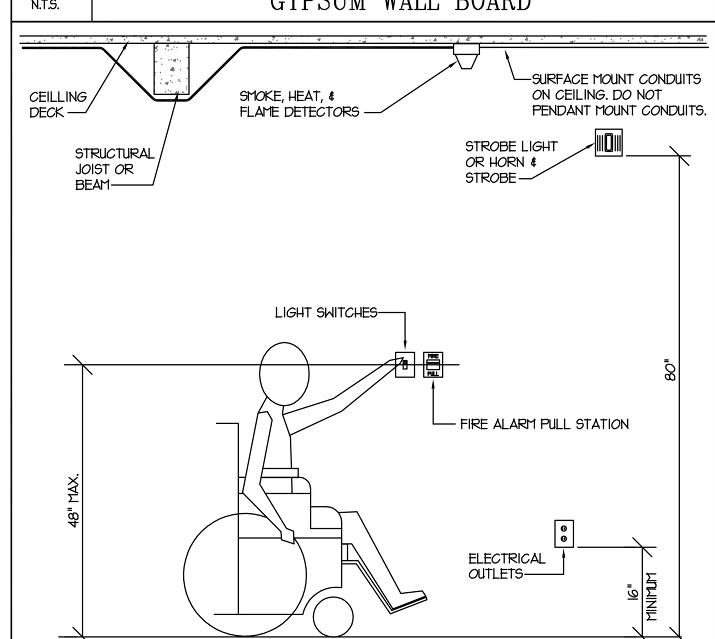

SCALE: N.T.S.

STANDARD HEIGHTS FOR HANDICAPPED ACCESS

ANCHOR THE 4" CONCRETE BASE TO THE SLAB WITH (1) #4 REBAR AT EACH CORNER OF BASE (MIN. 3" COVERAGE FROM EDGE) 3" INTO SLAB AND BASE.

NOTE:
APPROVED ANCHOR SYSTEMS ARE: HILTI HVA, HILTI HIT, OR RAMSET EPCON

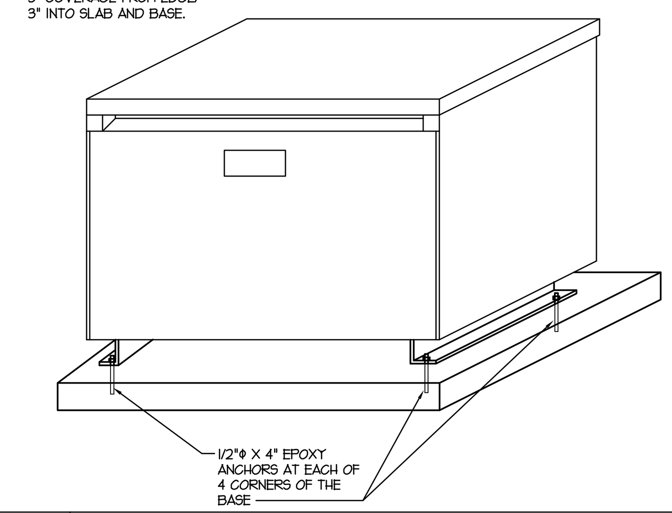

SCALE: N.T.S.

SEISMIC ANCHORING DETAIL FOR DRY TYPE TRANSFORMER

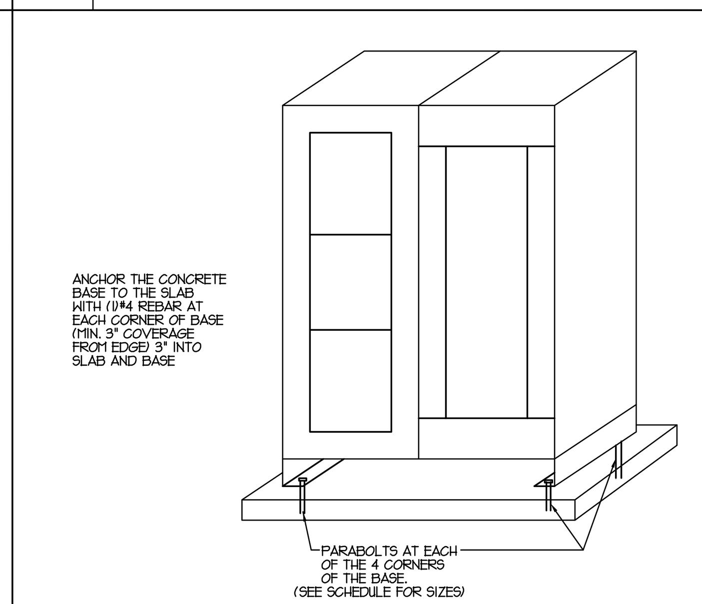

SCALE: N.T.S.

SEISMIC ANCHORING DETAIL FOR MISC. FREESTANDING FLOOR MTD. EQUIPMENT

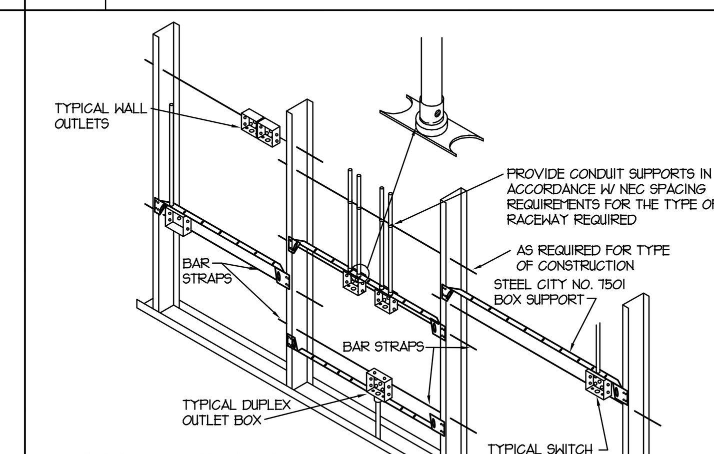

1. TYP. FOR WOOD & METAL STUD ROUGH-IN.
2. PLASTER RINGS NOT SHOWN.
3. LOCATE ALL OUTLET BOXES IN ACCORDANCE W/ ARCH. & MECH. DWGS., AND W/ ALL APPLICABLE SHOP DWGS.

NOTES:
1. IN ACCORDANCE W/ IBC 711.3.2, OUTLETS ON OPPOSITE SIDES OF FIRE RATED WALLS OR PARTITIONS IN THE SAME STUD SPACE MUST BE SEPARATED BY MIN. OF 24" HORIZONTAL DISTANCE.

SCALE: N.T.S.

TYPICAL ROUGH-IN REQUIREMENTS DETAIL

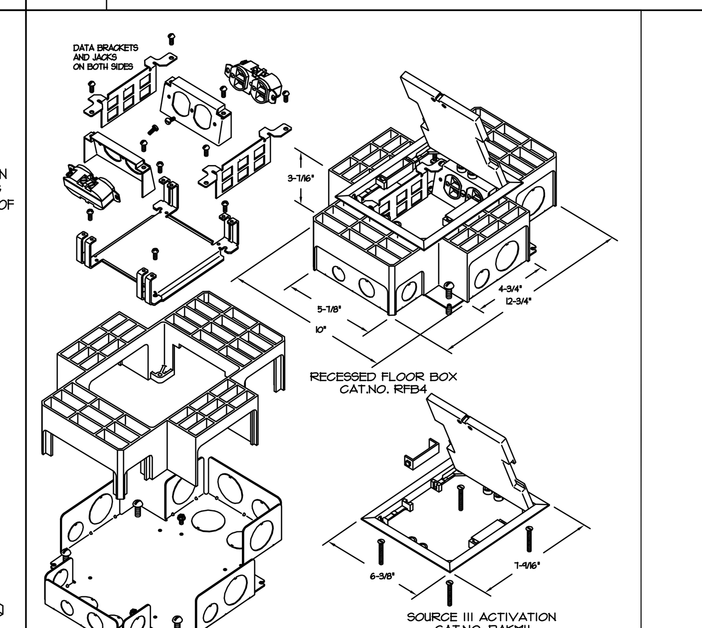

SCALE N.T.S.

FLUSH FLOOR OUTLET DETAIL

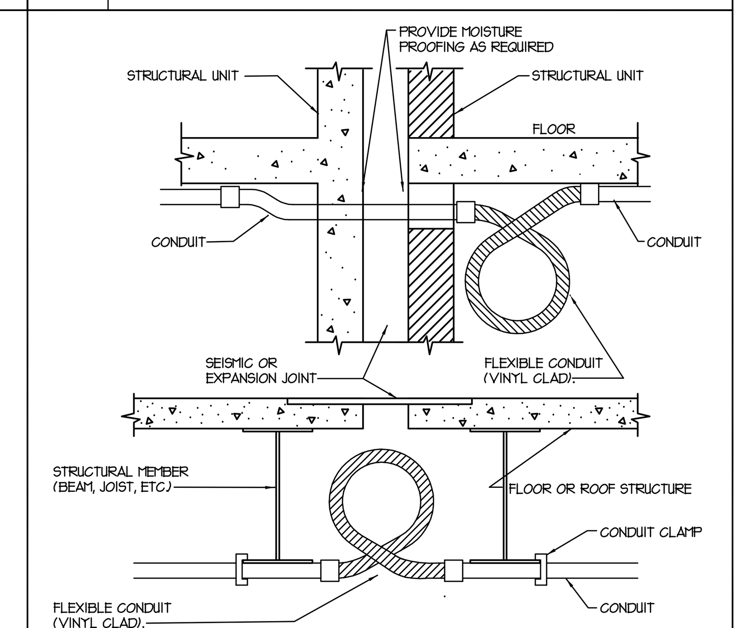

SCALE: N.T.S.

CONDUIT CROSSING SEISMIC OR EXPANSION JOINT DETAIL

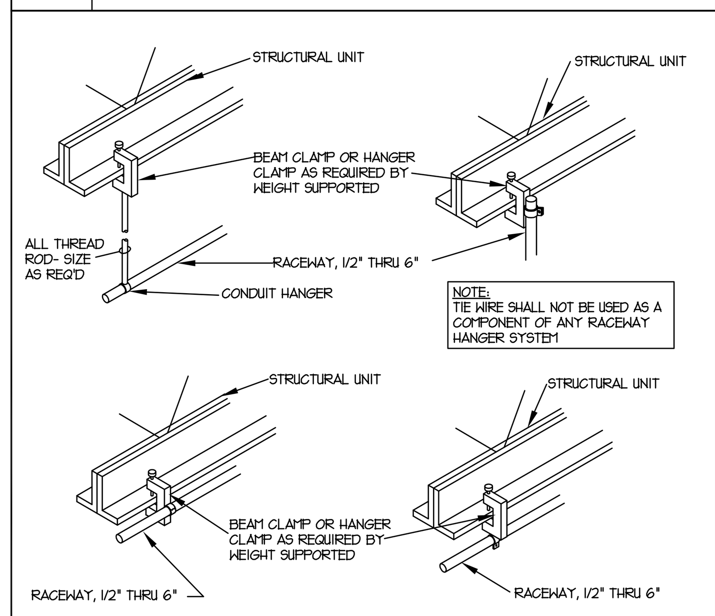

SCALE: N.T.S.

TYPICAL RACEWAY SUPPORT METHODS DETAIL

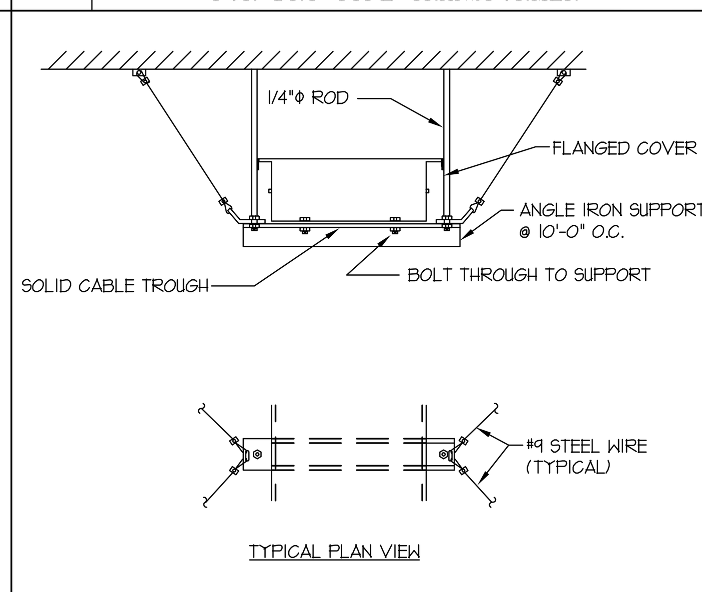

SCALE: N.T.S.

SUPPORT FOR CABLE TROUGH

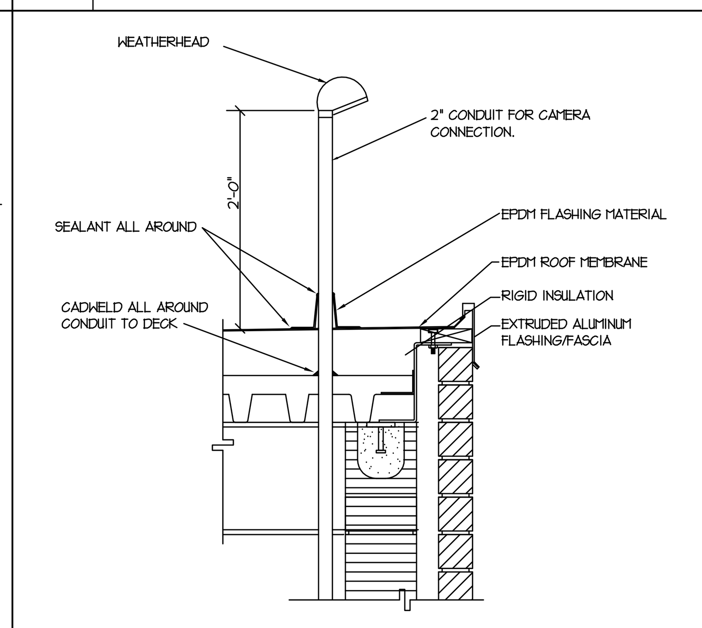

SCALE: N.T.S.

CONDUIT PENETRATION DETAIL THROUGH ROOF FOR SATELLITE TV

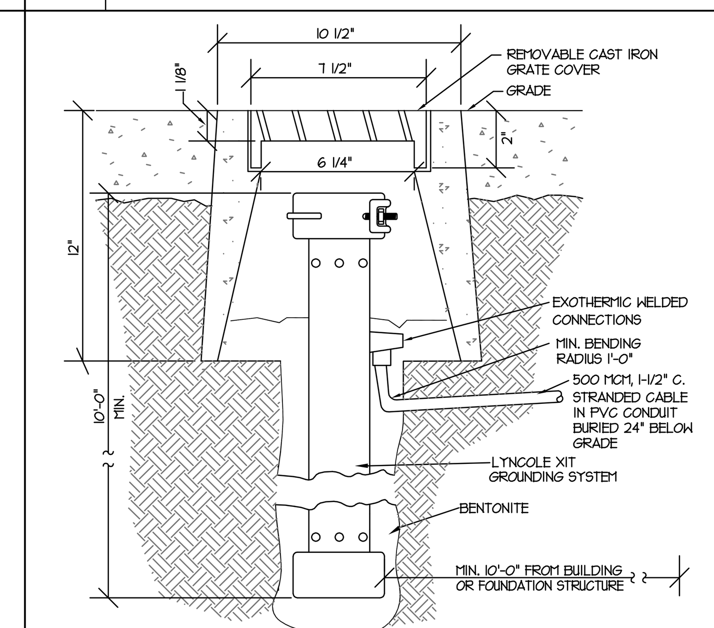

SCALE: N.T.S.

GROUNDING WELL DETAIL

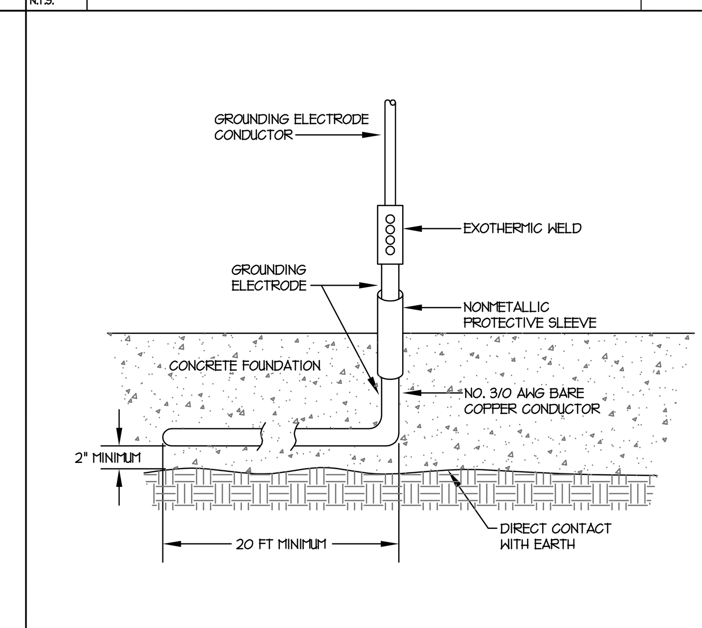

SCALE: N.T.S.

TYPICAL UFER GROUNDING DETAIL

GENERAL STRUCTURE NOTES - CONCRETE

A. Materials shall comply with the Standards specified in the latest edition of ACI 318, "Building Code Requirements for Reinforced Concrete".
1. Compressive strengths of concrete at 28 days shall be as follows:
a. Footings and slabs.............................4000 psi, Type II Cement.
b. All other Site Cast Concrete.................4000 psi
2. Concrete Density: Normal weight concrete shall be approximately 145 to 155 pounds per cubic foot.
3. Reinforcement steel: Grade 60, fy = 60,000 psi min. unless noted otherwise.
4. Admixtures: Exterior Concrete shall have 5% to 8% air entrainment.
a. Air-entraining admixtures, comply with ASTM C 260 (when used).
b. Calcium chloride shall not be added to the concrete mix.

B. Formwork shall comply with ACI Standards Publication 347 and the project specifications. The contractor shall be responsible for the design, detailing, care, placement and removal of the formwork and shores.

C. Concrete cover requirements for deformed bar reinforcing steel shall comply with ACI 318, "Building Code Requirements for Reinforced Concrete.
1. Cast-in-place Concrete: Clear. Cover
a. Cast against and permanently exposed to earth.......................3"
b. Formed concrete exposed to earth or weather:
#6 thru #18 bars..2"
#5 and small bars...1 1/2"

D. Detailing: All reinforcing, including WWF, shall be detailed, bolstered & supported to comply with ACI 315, "Manual of Standard Practice for Detailing Reinforcing Concrete Structures" and the Concrete Reinforcing Steel Institute (CRSI) recommendations. Reinforcing bars shall not be welded unless specifically shown on drawings.
1. Lap splice lengths shall be as follows:
a. 30 bar dia. For #3 and #4 bars.
b. 40 bar dia. For #5 thru #8 bars.
c. Do not splice stirrups & ties.
d. Do not splice vertical bars in retaining walls, unless specifically shown.
2. All embedments and dowels shall be securely tied to formwork or to adjacent reinforcing prior to the placement of concrete.
3. Use chairs or other support devices recommended by the CRSI to support and tie reinforcement bars and WWF prior to placing concrete. WWF shall be continuously supported at 36" o.c. maximum.

E. No aluminum conduit or product containing aluminum or any other material injurious to concrete shall be embedded in concrete.

SCALE: N.T.S.

GENERAL STRUCTURE NOTES - CONCRETE

State of Utah
Department of Administrative Services

Division of Facilities Construction & Management
4110 State Office Building
Salt Lake City, Utah 84114
Phone: (801) 538 - 3018
Fax: (801) 538 - 3267
Internet: http://www.dfcm.state.ut.us

Utah National Guard
12953 South Minuteman Drive
Draper, Utah 84020-1726

E.C.E. INC., CONSULTING ENGINEERS
939 SO. WEST TEMPLE
SALT LAKE CITY, UTAH 84101
(801) 521-8007

BUILDING NAME:
BILLETING

PROJECT TITLE:
TASS COMPLEX
CAMP WILLIAMS
UTAH NATIONAL GUARD

MARK	DATE	DESCRIPTION

ISSUE TYPE:
Final Bid Documents

ISSUE DATE:
April 16, 2007

DFCM PROJECT NO: 95059480
CAD PROJECT NO: 2950
CAD DWG FILE:
DRAWN BY:
CHK'D BY:
COPYRIGHT: State of Utah

SHEET TITLE
BAY BILLETING BUILDING DETAILS

SHEET NUMBER
EE-6B5

PANEL "1LB1"

PANEL	"1LB1"	AIC RATING	22K AMPS
PHASE / WIRE	3 / 4	RATING	120 / 208 VOLTS
MAIN LUG	225 AMPS	SUBFEED LUGS	
MAIN BREAKER	AMPS	COMMENT	

CKT	LOCATION	RECEPT	LTG	OTHER	POLE	SIZE	PHASE	SIZE	POLE	OTHER	LTG	RECEPT	LOCATION	CKT
1	MALE BAY B114	600			1	20	A	20	1			600	MALE LATRINE B111	2
3	MALE BAY B114	400			1	20	B	20	1			600	MALE LATRINE B111	4
5	MALE BAY B114	600			1	20	C	20	1			400	MALE LATRINE B111	6
7	MALE BAY B114	400			1	20	A	20	1			400	MALE LATRINE B111	8
9	FEMALE BAY B119	600			1	20	B	20	1	200			FSD	10
11	FEMALE BAY B119	600			1	20	C	20	1				SPARE	12
13	FEMALE BAY B119	400			1	20	A	20	1				SPARE	14
15	MALE BAY B113	600			1	20	B	20	1				SPARE	16
17	MALE BAY B113	400			1	20	C	20	1				SPARE	18
19	MALE BAY B113	600			1	20	A	20	1				SPARE	20
21	MALE BAY B113	400			1	20	B	20	1				SPARE	22
23	FEMALE BAY B120	600			1	20	C	20	1				SPARE	24
25	FEMALE BAY B120	600			1	20	A	20	1				SPARE	26
27	FEMALE BAY B120	400			1	20	B	20	1				SPARE	28
29	MALE BAY B112	600			1	20	C	20	1				SPARE	30
31	MALE BAY B112	400			1	20	A	20	1				SPARE	32
33	MALE BAY B112	600			1	20	B	20	1				SPARE	34
35	MALE BAY B112	400			1	20	C	20	1				SPARE	36
37	FEMALE BAY B121	600			1	20	A	20	1				SPARE	38
39	FEMALE BAY B121	600			1	20	B	20	1				SPARE	40
41	FEMALE BAY B121	400			1	20	C	20	1				SPARE	42

VA	VA	VA		AMPS		KVA		VA	VA	VA
3600	0	0	A	38.33	A	4.6	A	0	0	1000
3600	0	0	B	36.67	B	4.4	B	200	0	600
3600	0	0	C	33.33	C	4	C	0	0	400
10800	0	0		36.09	TOTAL	13		200	0	2000

PANEL "1LB2"

PANEL	"1LB2"	AIC RATING	22K AMPS
PHASE / WIRE	3 / 4	RATING	120 / 208 VOLTS
MAIN LUG	225 AMPS	SUBFEED LUGS	
MAIN BREAKER	AMPS	COMMENT	

CKT	LOCATION	RECEPT	LTG	OTHER	POLE	SIZE	PHASE	SIZE	POLE	OTHER	LTG	RECEPT	LOCATION	CKT
1	MALE BAY B104	600			1	20	A	20	1			200	FEMALE LATRINE B122	2
3	MALE BAY B104	400			1	20	B	20	1			200	FEMALE LATRINE B122	4
5	MALE BAY B104	600			1	20	C	20	1			200	FEMALE LATRINE B122	6
7	MALE BAY B104	400			1	20	A	20	1			200	FEMALE LATRINE B122	8
9	FEMALE BAY B126	600			1	20	B	20	1			200	FEMALE LATRINE B122	10
11	FEMALE BAY B126	600			1	20	C	20	1			200	FEMALE LATRINE B122	12
13	FEMALE BAY B126	400			1	20	A	20	1			200	FEMALE LATRINE B122	14
15	MALE BAY B103	600			1	20	B	20	1			200	FEMALE LATRINE B122	16
17	MALE BAY B103	400			1	20	C	20	1	150			FSD	18
19	MALE BAY B103	600			1	20	A	20	1				SPARE	20
21	MALE BAY B103	400			1	20	B	20	1				SPARE	22
23	FEMALE BAY B127	600			1	20	C	20	1				SPARE	24
25	FEMALE BAY B127	600			1	20	A	20	1				SPARE	26
27	FEMALE BAY B127	400			1	20	B	20	1				SPARE	28
29	MALE BAY B102	600			1	20	C	20	1				SPARE	30
31	MALE BAY B102	400			1	20	A	20	1				SPARE	32
33	MALE BAY B102	600			1	20	B	20	1				SPARE	34
35	MALE BAY B102	400			1	20	C	20	1				SPARE	36
37	SPARE				1	20	A	20	1				SPARE	38
39	SPARE				1	20	B	20	1				SPARE	40
41	SPARE				1	20	C	20	1				SPARE	42

VA	VA	VA		AMPS		KVA		VA	VA	VA
3000	0	0	A	30	A	3.6	A	0	0	600
3000	0	0	B	30	B	3.6	B	0	0	600
3200	0	0	C	31.25	C	3.75	C	150	0	400
9200	0	0		30.4	TOTAL	10.95		150	0	1600

PANEL "1LB3"

PANEL	"1LB3"	AIC RATING	22K AMPS
PHASE / WIRE	3 / 4	RATING	120 / 208 VOLTS
MAIN LUG	225 AMPS	SUBFEED LUGS	
MAIN BREAKER	AMPS	COMMENT	

CKT	LOCATION	RECEPT	LTG	OTHER	POLE	SIZE	PHASE	SIZE	POLE	OTHER	LTG	RECEPT	LOCATION	CKT
1	VENDING B128	200			1	20	A	20	1			800	CORRIDOR B108	2
3	VENDING B128	200			1	20	B	20	1			600	CORRIDOR B108	4
5	VENDING B128	200			1	20	C	20	1			600	CORRIDOR B108	6
7	LOUNGE B128	600			1	20	A	20	1			600	CORRIDOR B125	8
9	LOUNGE B128	600			1	20	B	20	1			600	CORRIDOR B125	10
11	SPARE				1	20	C	20	1			600	CORRIDOR B125	12
13	SPARE				1	20	A	20	1			600	CUST. B110,107,106	14
15	SPARE				1	20	B	20	1			400	CHASE B123	16
17	SPARE				1	20	C	20	1			600	ELEC. B109	18
19	SPARE				1	20	A	20	1			200	COMM. B135	20
21	SPARE				1	20	B	20	1			200	EWC B108	22
23	SPARE				1	20	C	20	1			200	EWC B125	24
25	SPARE				1	20	A	20	1			400	ELEC. B137	26
27	SPARE				1	20	B	20	1			600	CUST. B141,140,138	28
29	SPARE				1	20	C	20	1			200	ELEC. B139	30
31	SPARE				1	20	A	20	1				SPARE	32
33	SPARE				1	20	B	20	1				SPARE	34
35	SPARE				1	20	C	20	1				SPARE	36
37	SPARE				1	20	A	20	1				SPARE	38
39	SPARE				1	20	B	20	1				SPARE	40
41	SPARE				1	20	C	20	1				SPARE	42

VA	VA	VA		AMPS		KVA		VA	VA	VA
800	0	0	A	28.33	A	3.4	A	0	0	2600
800	0	0	B	26.67	B	3.2	B	0	0	2400
200	0	0	C	20	C	2.4	C	0	0	2200
1800	0	0		24.98	TOTAL	9		0	0	7200

PANEL "LMDPB"

PANEL	"LMDPB"
PHASE/WIRE	3/4
MAIN LUG	1600 AMPS
MAIN BREAKER	1600 AMPS
AIC RATING	100K AMPS
VOLTAGE	120 / 208 VOLTS

CKT	LOCATION	DO	LTG	OTHER	POLE	SIZE
1	PANELS 1LB1, 1LB2			65.509	3	225
2	PANELS 1LB3, 1LB5			96.682	3	225
3	PANEL 1LB4			13.879	3	225
4	PANELS 2LB1, 2LB2			72.171	3	225
5	PANELS 2LB3, 2LB5			41.695	3	225
6	PANEL 2LB4			13.879	3	225
7	PANEL HMB			29.6	3	100
8	SPARE				1	100
9	SPARE				1	100
10						
11						
12						
13						
14						
15						
16						
17						
18						
19						
20						
21						
	TOTAL AMP	0	0	333.415		
	TOTAL K VA	0	0	120.122		

GRAND TOTAL KVA 120.122
SERVICE SIZE 416.769

PANEL "1LB5"

PANEL	"1LB5"	AIC RATING	22K AMPS
PHASE / WIRE	3 / 4	RATING	120 / 208 VOLTS
MAIN LUG	225 AMPS	SUBFEED LUGS	
MAIN BREAKER	AMPS	COMMENT	

CKT	LOCATION	RECEPT	LTG	OTHER	POLE	SIZE	PHASE	SIZE	POLE	OTHER	LTG	RECEPT	LOCATION	CKT
1	BCU			900	1	20	A	20	1	900			BCU	2
3	BCU			900	1	20	B	20	1	900			BCU	4
5	BCU			900	1	20	C	20	1	900			BCU	6
7	BCU			900	1	20	A	20	1	900			BCU	8
9	BCU			900	1	20	B	20	1	900			BCU	10
11	BCU			900	1	20	C	20	1	900			BCU	12
13	BCU			900	1	20	A	20	1				CH-CONTROL	14
15	BCU			900	1	20	B	20	1	900			GMU-1	16
17	BCU			900	1	20	C	20	1				SPARE	18
19	BCU			900	1	20	A	20	1				SPARE	20
21	B114, B113, B112 LTG		900		1	20	B	20	1				SPARE	22
23	B111 LTG		980		1	20	C	20	1				SPARE	24
25	SHOWER B105 LTG		820		1	20	A	20	1				SPARE	26
27	B104, B103, B102, LTG		900		1	20	B	20	1				SPARE	28
29	LOUNGE AREA LTG		940		1	20	C	20	1				SPARE	30
31	B126, B127 LTG		600		1	20	A	20	1				SPARE	32
33	SHOWER B124 LTG		740		1	20	B	20	1				SPARE	34
35	LATRINE B122 LTG		880		1	20	C	20	1				SPARE	36
37	B119, B120, B121 LTG		900		1	20	A	20	1				SPARE	38
39	LAUNDRY/CORRIDORS LTG		2380		1	20	B	20	1				SPARE	40
41	MECH AREA LTG		490		1	20	C	20	1				SPARE	42

VA	VA	VA		AMPS		KVA		VA	VA	VA
0	2320	3600	A	64.33	A	7.72	A	1800	0	0
0	4920	2700	B	86	B	10.32	B	2700	0	0
0	3290	2700	C	64.92	C	7.79	C	1800	0	0
0	10530	9000		71.7	TOTAL	25.83		6300	0	0

PANEL "1LB4"

PANEL	"1LB4"	AIC RATING	22K AMPS
PHASE / WIRE	3 / 4	RATING	120 / 208 VOLTS
MAIN LUG	225 AMPS	SUBFEED LUGS	
MAIN BREAKER	AMPS	COMMENT	

CKT	LOCATION	RECEPT	LTG	OTHER	POLE	SIZE	PHASE	SIZE	POLE	OTHER	LTG	RECEPT	LOCATION	CKT
1	WASHER	200			1	20	A	20	1	200			DRYER	2
3	WASHER	200			1	20	B	20	1	200			DRYER	4
5	WASHER	200			1	20	C	20	1	200			DRYER	6
7	WASHER	200			1	20	A	20	1	200			DRYER	8
9	WASHER	200			1	20	B	20	1	200			DRYER	10
11	WASHER	200			1	20	C	20	1	200			DRYER	12
13	C.O.	800			1	20	A	20	1	200			DRYER	14
15	SPARE				1	20	B	20	1	200			DRYER	16
17	SPARE				1	20	C	20	1	200			DRYER	18
19	SPARE				1	20	A	20	1	200			DRYER	20
21	SPARE				1	20	B	20	1	200			DRYER	22
23	SPARE				1	20	C	20	1	200			DRYER	24
25	SPARE				1	20	A	20	1			200	WASHER	26
27	SPARE				1	20	B	20	1			200	WASHER	28
29	SPARE				1	20	C	20	1			200	WASHER	30
31	SPARE				1	20	A	20	1				SPARE	32
33	SPARE				1	20	B	20	1				SPARE	34
35	SPARE				1	20	C	20	1				SPARE	36
37	SPARE				1	20	A	20	1				SPARE	38
39	SPARE				1	20	B	20	1				SPARE	40
41	SPARE				1	20	C	20	1				SPARE	42

VA	VA	VA		AMPS		KVA		VA	VA	VA
1200	0	0	A	18.33	A	2.2	A	800	0	200
400	0	0	B	11.67	B	1.4	B	800	0	200
400	0	0	C	11.67	C	1.4	C	800	0	200
2000	0	0		13.88	TOTAL	5		2400	0	600

PANEL "2LB1"

PANEL	"2LB1"	AIC RATING	22K AMPS
PHASE / WIRE	3 / 4	RATING	120 / 208 VOLTS
MAIN LUG	225 AMPS	SUBFEED LUGS	
MAIN BREAKER	AMPS	COMMENT	

CKT	LOCATION	RECEPT	LTG	OTHER	POLE	SIZE	PHASE	SIZE	POLE	OTHER	LTG	RECEPT	LOCATION	CKT
1	MALE BAY B215	600			1	20	A	20	1			600	MALE BAY B221	2
3	MALE BAY B215	400			1	20	B	20	1			400	MALE BAY B221	4
5	MALE BAY B215	600			1	20	C	20	1			600	MALE BAY B221	6
7	MALE BAY B215	400			1	20	A	20	1			400	MALE BAY B221	8
9	MALE BAY B219	600			1	20	B	20	1				SPARE	10
11	MALE BAY B219	400			1	20	C	20	1			600	MALE LATRINE B212	12
13	MALE BAY B219	600			1	20	A	20	1			600	MALE LATRINE B212	14
15	MALE BAY B219	400			1	20	B	20	1			400	MALE LATRINE B212	16
17	MALE BAY B214	600			1	20	C	20	1			400	MALE LATRINE B212	18
19	MALE BAY B214	400			1	20	A	20	1				SPARE	20
21	MALE BAY B214	600			1	20	B	20	1				SPARE	22
23	MALE BAY B214	400			1	20	C	20	1				SPARE	24
25	MALE BAY B220	600			1	20	A	20	1				SPARE	26
27	MALE BAY B220	400			1	20	B	20	1				SPARE	28
29	MALE BAY B220	600			1	20	C	20	1				SPARE	30
31	MALE BAY B220	400			1	20	A	20	1				SPARE	32
33	MALE BAY B213	600			1	20	B	20	1				SPARE	34
35	MALE BAY B213	400			1	20	C	20	1				SPARE	36
37	MALE BAY B213	600			1	20	A	20	1				SPARE	38
39	MALE BAY B213	400			1	20	B	20	1				SPARE	40
41	SPARE				1	20	C	20	1				SPARE	42

VA	VA	VA		AMPS		KVA		VA	VA	VA
3600	0	0	A	43.33	A	5.2	A	0	0	1600
3400	0	0	B	35	B	4.2	B	0	0	800
3000	0	0	C	38.33	C	4.6	C	0	0	1600
10000	0	0		38.86	TOTAL	14		0	0	4000

PANEL "2LB5"

PANEL	"2LB5"	AIC RATING	22K AMPS
PHASE / WIRE	3 / 4	RATING	120 / 208 VOLTS
MAIN LUG	225 AMPS	SUBFEED LUGS	
MAIN BREAKER	AMPS	COMMENT	

CKT	LOCATION	RECEPT	LTG	OTHER	POLE	SIZE	PHASE	SIZE	POLE	OTHER	LTG	RECEPT	LOCATION	CKT
1	BCU				1	20	A	20	1				BCU	2
3	BCU				1	20	B	20	1				BCU	4
5	BCU				1	20	C	20	1				BCU	6
7	BCU				1	20	A	20	1				BCU	8
9	BCU				1	20	B	20	1				BCU	10
11	BCU				1	20	C	20	1				BCU	12
13	BCU				1	20	A	20	1				BCU	14
15	BCU				1	20	B	20	1				BCU	16
17	WATER HEATER CONTROL				1	20	C	20	1			200	ROOF OUTLET	18
19	SPARE				1	20	A	20	1				SPARE	20
21	B213, B214, B215 LTG		900		1	20	B	20	1				SPARE	22
23	B212, B210, B207 LTG		1190		1	20	C	20	1				SPARE	24
25	B206, B208, B212 LTG		910		1	20	A	20	1				SPARE	26
27	B205, B204, B203 LTG		900		1	20	B	20	1				SPARE	28
29	B228, B229, B230 LTG		900		1	20	C	20	1				SPARE	30
31	B222, B227 LTG		910		1	20	A	20	1				SPARE	32
33	B222, B223 LTG		1190		1	20	B	20	1				SPARE	34
35	B219, B220, B221 LTG		900		1	20	C	20	1				SPARE	36
37	MECH/LAUNDRY B216 LTG		440		1	20	A	20	1				SPARE	38
39	B211,226,225,224,209 LTG		980		1	20	B	20	1				SPARE	40
41	SPARE				1	20	C	20	1				SPARE	42

VA	VA	VA		AMPS		KVA		VA	VA	VA
0	2260	0	A	18.83	A	2.26	A	0	0	0
0	3970	0	B	33.08	B	3.97	B	0	0	0
0	2990	0	C	26.58	C	3.19	C	0	0	200
0	9220	0		26.15	TOTAL	9.42		0	0	200

PANEL "2LB2"

PANEL	"2LB2"	AIC RATING	22K AMPS
PHASE / WIRE	3 / 4	RATING	120 / 208 VOLTS
MAIN LUG	225 AMPS	SUBFEED LUGS	
MAIN BREAKER	AMPS	COMMENT	

CKT	LOCATION	RECEPT	LTG	OTHER	POLE	SIZE	PHASE	SIZE	POLE	OTHER	LTG	RECEPT	LOCATION	CKT
1	MALE BAY B205	600			1	20	A	20	1			600	MALE BAY B230	2
3	MALE BAY B205	400			1	20	B	20	1			400	MALE BAY B230	4
5	MALE BAY B205	600			1	20	C	20	1			600	MALE BAY B230	6
7	MALE BAY B205	400			1	20	A	20	1			400	MALE BAY B230	8
9	MALE BAY B228	600			1	20	B	20	1				SPARE	10
11	MALE BAY B228	400			1	20	C	20	1				SPARE	12
13	MALE BAY B228	600			1	20	A	20	1				SPARE	14
15	MALE BAY B228	400			1	20	B	20	1				SPARE	16
17	MALE BAY B204	600			1	20	C	20	1				SPARE	18
19	MALE BAY B204	400			1	20	A	20	1				SPARE	20
21	MALE BAY B204	600			1	20	B	20	1				SPARE	22
23	MALE BAY B204	400			1	20	C	20	1				SPARE	24
25	MALE BAY B229	600			1	20	A	20	1				SPARE	26
27	MALE BAY B229	400			1	20	B	20	1				SPARE	28
29	MALE BAY B229	600			1	20	C	20	1				SPARE	30
31	MALE BAY B229	400			1	20	A	20	1				SPARE	32
33	MALE BAY B203	600			1	20	B	20	1				SPARE	34
35	MALE BAY B203	400			1	20	C	20	1				SPARE	36
37	MALE BAY B203	600			1	20	A	20	1				SPARE	38
39	MALE BAY B203	400			1	20	B	20	1				SPARE	40
41	SPARE				1	20	C	20	1				SPARE	42

VA	VA	VA		AMPS		KVA		VA	VA	VA
3600	0	0	A	38.33	A	4.6	A	0	0	1000
3400	0	0	B	31.67	B	3.8	B	0	0	400
3000	0	0	C	30	C	3.6	C	0	0	600
10000	0	0		33.31	TOTAL	12		0	0	2000

PANEL "2LB3"

PANEL	"2LB3"	AIC RATING	22K AMPS
PHASE / WIRE	3 / 4	RATING	120 / 208 VOLTS
MAIN LUG	225 AMPS	SUBFEED LUGS	
MAIN BREAKER	AMPS	COMMENT	

CKT	LOCATION	RECEPT	LTG	OTHER	POLE	SIZE	PHASE	SIZE	POLE	OTHER	LTG	RECEPT	LOCATION	CKT
1	SPARE				1	20	A	20	1			600	CORRIDOR B211	2
3	SPARE				1	20	B	20	1			400	CORRIDOR B211	4
5	SPARE				1	20	C	20	1			400	CORRIDOR B211	6
7	SPARE				1	20	A	20	1			200	MECH. ROOM B216	8
9	SPARE				1	20	B	20	1			600	CUST. B224,226,223	10
11	SPARE				1	20	C	20	1			600	MALE LATRINE B222	12
13	SPARE				1	20	A	20	1			600	MALE LATRINE B222	14
15	SPARE				1	20	B	20	1			400	MALE LATRINE B222	16
17	SPARE				1	20	C	20	1			400	MALE LATRINE B222	18
19	SPARE				1	20	A	20	1			200	ELEC. B225	20
21	SPARE				1	20	B	20	1			600	CUST. B210,208,207	22
23	SPARE				1	20	C	20	1			200	ELEC. B209	24
25	SPARE				1	20	A	20	1			200	EWC B211	26
27	SPARE				1	20	B	20	1			200	EWC B211	28
29	SPARE				1	20	C	20	1				SPARE	30
31	SPARE				1	20	A	20	1				SPARE	32
33	SPARE				1	20	B	20	1				SPARE	34
35	SPARE				1	20	C	20	1				SPARE	36
37	SPARE				1	20	A	20	1				SPARE	38
39	SPARE				1	20	B	20	1				SPARE	40
41	SPARE				1	20	C	20	1				SPARE	42

VA	VA	VA		AMPS		KVA		VA	VA	VA
0	0	0	A	15	A	1.8	A	0	0	1800
0	0	0	B	18.33	B	2.2	B	0	0	2200
0	0	0	C	13.33	C	1.6	C	0	0	1600
0	0	0		15.54	TOTAL	5.6		0	0	5600

MECHANICAL EQUIPMENT SCHEDULE-1B

	NAME OF MECHANICAL EQUIPMENT	BLOWER FAN COIL	EXHAUST FAN	CHILLER	HOT WATER PUMP	MAKE UP AIR UNIT		CHILL WATER PUMP	GLYCOLE MAKE UP UNIT	BOILER	DOMESTIC WATE CIRCULATIO PUMP	WATER PUMP	
MOTOR DATA	EQUIPMENT NO.	BL-1 TO 30	EF-1,2	CH-1	HWP-1,2	MAU-1	BCU-1 THRU 16	CHW-1,2	GWP-1	B-1,2	DCP-1,2	BP-1,2	
	RATING/WATTS	1/2 HP	3/4 HP	60 T	2 HP	5 HP	1/2 HP	5 HP	1/2 HP	1/2 HP	1/12 1/6	1 HP	
	VOLTAGE	120	120	208	208	208	120	208	120	208	120	480	
	PHASE	1	1	3	3	3	1	3	1	3	1	3	
	AMPS	9.8	13.8	275	7.8	17.5	9.8	17.5	9.8	2.3	--	--	
	WIRE SIZE	2 #12	2 #12	3 #500	3 #12	3 #10	2 #12	3 #10	2 #12	3 #12	2 #12	3 #12	
	GROUND WIRE	1 #12	1 #12	1 #1/O	1 #12	1 #12	1 #12	1 #12	1 #12	1 #12	1 #12	1 #12	
	CONDUIT SIZE	3/4"	3/4"	3 1/2"	3/4"	3/4"	3/4"	3/4"	3/4"	3/4"	3/4"	3/4"	
	FUSE DISC. SW.	--	--	400	30	30	--	30	--	30	--	--	
	RTYPE RKI FUSES	--	--	350	10	25	--	25	--	3	--	--	
	NON-FUSE SW.	--	--	--	--	--	--	--	--	--	--	--	
	STARTER SIZE	--	--	--	--	--	--	--	--	--	--	--	
	NOTES	2	2	1	3	3	2	3	2	3	2	2	

NOTES:
1. STARTER IS FURNISHED WITH THE UNIT. PROVIDE DISCONNECT.
2. PROVIDE THERMAL OVERLOAD SWITCH.
3. PROVIDE COMBINATION STARTER & DISCONNECT (HOA) WITH (2) N.O. & N.C CONTACTS.
4. PROVIDE VFD AND SITE FUSED DISCONNECT WITH ELECTRICAL INTERLOCK. (FACTORY INSTALLED).
5. UTILIZE EXISTING VFD AND RELOCATE AS REQUIRED.

PANEL "2LB4"

PANEL	"2LB4"	AIC RATING	22K AMPS
PHASE / WIRE	3 / 4	RATING	120 / 208 VOLTS
MAIN LUG	225 AMPS	SUBFEED LUGS	
MAIN BREAKER	AMPS	COMMENT	

CKT	LOCATION	RECEPT	LTG	OTHER	POLE	SIZE	PHASE	SIZE	POLE	OTHER	LTG	RECEPT	LOCATION	CKT
1	WASHER	200			1	20	A	20	1	200			DRYER	2
3	WASHER	200			1	20	B	20	1	200			DRYER	4
5	WASHER	200			1	20	C	20	1	200			DRYER	6
7	WASHER	200			1	20	A	20	1	200			DRYER	8
9	WASHER	200			1	20	B	20	1	200			DRYER	10
11	WASHER	200			1	20	C	20	1	200			DRYER	12
13	C.O.	800			1	20	A	20	1	200			DRYER	14
15	SPARE				1	20	B	20	1	200			DRYER	16
17	SPARE				1	20	C	20	1	200			DRYER	18
19	SPARE				1	20	A	20	1	200			DRYER	20
21	SPARE				1	20	B	20	1	200			DRYER	22
23	SPARE				1	20	C	20	1	200			DRYER	24
25	SPARE				1	20	A	20	1			200	WASHER	26
27	SPARE				1	20	B	20	1			200	WASHER	28
29	SPARE				1	20	C	20	1			200	WASHER	30
31	SPARE				1	20	A	20	1				SPARE	32
33	SPARE				1	20	B	20	1				SPARE	34
35	SPARE				1	20	C	20	1				SPARE	36
37	SPARE				1	20	A	20	1				SPARE	38
39	SPARE				1	20	B	20	1				SPARE	40
41	SPARE				1	20	C	20	1				SPARE	42

VA	VA	VA		AMPS		KVA		VA	VA	VA
1200	0	0	A	18.33	A	2.2	A	800	0	200
400	0	0	B	11.67	B	1.4	B	800	0	200
400	0	0	C	11.67	C	1.4	C	800	0	200
2000	0	0		13.88	TOTAL	5		2400	0	600

PANEL "1ELB"

PANEL	"1ELB"	AIC RATING	22K AMPS
PHASE / WIRE	3 / 4	RATING	120 / 208 VOLTS
MAIN LUG	100 AMPS	SUBFEED LUGS	
MAIN BREAKER	30 AMPS	COMMENT	

CKT	LOCATION	RECEPT	LTG	OTHER	POLE	SIZE	PHASE	SIZE	POLE	OTHER	LTG	RECEPT	LOCATION	CKT
1	FIRE ALARM				1	20	A	20	1		1090		SECOND LEVEL E-LTS	2
3	COMM ROOM				1	20	B	20	1		2380		FIRST LEVEL E-LTS	4
5	COMM ROOM				1	20	C	20	1				SPARE	6
7	SPARE				1	20	A	20	1				SPARE	8
9	SPARE				1	20	B	20	1				SPARE	10
11	SPARE				1	20	C	20	1				SPARE	12

VA	VA	VA		AMPS		KVA		VA	VA	VA
0	0	0	A	9.083	A	1.09	A	0	1090	0
0	0	0	B	19.83	B	2.38	B	0	2380	0
0	0	0	C	0	C	0	C	0	0	0
0	0	0		9.632	TOTAL	3.47		0	3470	0

State of Utah
Department of Administrative Services

Division of Facilities
Construction & Management

4110 State Office Building
Salt Lake City, Utah 84114
Phone: (801) 538 - 3018
Fax: (801) 538 - 3267

Internet: http://www.dfcm.state.ut.us

Utah National Guard

12953 South Minuteman Drive
Draper, Utah 84020-1726

E.C.E. INC., CONSULTING ENGINEERS
939 SO. WEST TEMPLE
SALT LAKE CITY, UTAH 84101
(801) 521-8007

BUILDING NAME:
BILLETING

PROJECT TITLE:
TASS COMPLEX
CAMP WILLIAMS
UTAH NATIONAL GUARD

MARK	DATE	DESCRIPTION

ISSUE TYPE:
Final Bid Documents

ISSUE DATE:
April 16, 2007

DFCM PROJECT NO: 95059480
CAD PROJECT NO: 2950
CAD DWG FILE:
DRAWN BY:
CHK'D BY:
COPYRIGHT: State of Utah

SHEET TITLE
BAY BILLETING BUILDING
ELECTRICAL
PANELS

SHEET NUMBER
EE-6B6